CONTRACT CHANGE ORDER

Change Requested by: Engineer

CCO 1	Suppl. No. 0	Contract No. 04 - 0120F4	Road SF-80-13.2/13.9	FED. AID LOC.:

To: **AMERICAN BRIDGE/FLUOR ENTERPRISES INC A JOINT VENTURE**

You are directed to make the following changes from the plans and specifications or do the following described work not included in the plans and specifications for this contract. ***NOTE: This change order is not effective until approved by the Engineer.***

Description of work to be done, estimate of quantities and prices to be paid. (Segregate between additional work at contract price, agreed price and force account.) Unless otherwise stated, rates for rental of equipment cover only such time as equipment is actually used and no allowance will be made for idle time. This last percentage shown is the net accumulated increase or decrease from the original quantity in the Engineer's Estimate.

Extra Work at Force Account:

Maintain the roadway and provide additional traffic control for the sole convenience and direction of the public in accordance with Section 10-1.26, "Maintaining Traffic" of the Special Provisions, Section 12, "Construction Area Traffic Control Devices" of the Standard Specifications, and as authorized by the Engineer.

Provide for the State's share of flagging costs in accordance with Section 12-2.02, "Flagging Cost", of the Standard Specifications.

Labor, equipment and material approved by the Engineer, as necessary will be paid in accordance with the provisions of Section 5-1.24, "Force Account Payment" of the Special Provisions.

Estimated Cost of Extra Work at Force Account $100,000.00

Estimated Cost: **Increase** ☑ **Decrease** ☐ **$100,000.00**

By reason of this order the time of completion will be adjusted as follows: 0 days

Submitted by

Signature	Resident Engineer: Gary Pursell	Date 08/30/06

Approval Recommended by

Signature	Construction Engineer: Gary Pursell	Date 08/30/06

Engineer Approval by

Signature	(Print name and title) Gary Pursell - Construction Engineer	Date 08/30/06

We the undersigned contractor, have given careful consideration to the change proposed and agree, if this proposal is approved, that we will provide all equipment, furnish the materials, except as may otherwise be noted above, and perform all services necessary for the work above specified, and will accept as full payment therefor the prices shown above.

NOTE: If you, the contractor, do not sign acceptance of this order, your attention is directed to the requirements of the specifications as to proceeding with the ordered work and filing a written protest within the time therein specified.

Contractor Acceptance by

Signature	(Print name and title) Michael D. Flowers Project Director	Date 8.30.06

STATE OF CALIFORNIA - DEPARTMENT OF TRANSPORTATION

CONTRACT CHANGE ORDER MEMORANDUM

DATE: 8/14/2006

TO: PETER SIEGENTHALER / Gary Pursell	FILE: **E.A.** 04 - 0120F4
FROM: Gary Pursell	**CO-RTE-PM** SF-80-13.2/13.9
	FED. NO.
CCO#: 1 SUPPLEMENT#: 0 Category Code: **AJZZ**	CONTINGENCY BALANCE (incl. this change) **$148,069,580.00**
COST: **$100,000.00** INCREASE ☑ DECREASE ☐	HEADQUARTERS APPROVAL REQUIRED? ☐ YES ☑ NO
SUPPLEMENTAL FUNDS PROVIDED: **$100,000.00**	IS THIS REQUEST IN ACCORDANCE WITH ENVIRONMENTAL DOCUMENTS? ☑ YES ☐ NO
CCO DESCRIPTION: Flagging & Traffic Control	**PROJECT DESCRIPTION:** CONSTRUCT SELF-ANCHORED SUSPENSION BRIDGE

LOCATION: IN SAN FRANCISCO COUNTY IN SAN FRANCISCO FROM 0.6 KM TO 1.3 KM EAST OF THE YERBA BUENA TUNNEL EAST PORTAL

THIS CHANGE ORDER PROVIDES FOR:

Maintaining the roadway and provide additional traffic control, construction area signs, and/or other traffic control devices not otherwise provided in the contract. In addition, this change order reimburses the Contractor for the State's share of flagging costs in accordance with Section 12-2.02, "Flagging Cost", of the Standard Specifications.

Labor, equipment and material approved by the Engineer, as necessary will be paid in accordance with the provisions of Section 5-1.24, "Force Account Payment" of the Special Provisions.

This work is not covered by any contract items. Therefore, payment for this work will be at Extra Work at Force Account for an estimated cost of $100,000.00, which can be financed from the supplemental funds of which $107,800.00 were allotted for this work.

No time adjustment is warranted as this change order does not affect the controlling operation.

Design and Maintenance concurrence are not needed for this change order, for this change order is part of the supplemental work associated with this project.

CONCURRED BY:

Construction Engineer:	Gary Pursell	Date8/30/2006
Bridge Engineer:		Date
FHWA Representative:		Date
Project Engineer:		Date
Other (specify):		Date
		Date
		Date
District Prior Approval By:	Gary Pursell	Date8/30/2006
HQ (Issue Approve) By:		Date
Resident Engineer's Signature:		Date 8-31-06

ESTIMATE OF COST

	THIS REQUEST	TOTAL TO DATE
ITEMS	$0.00	$0.00
FORCE ACCOUNT	$100,000.00	$100,000.00
AGREED PRICE	$0.00	$0.00
ADJUSTMENT	$0.00	$0.00
TOTAL	$100,000.00	$100,000.00

FEDERAL PARTICIPATION

☐ PARTICIPATING ☐ PARTICIPATING IN PART ☑ NONE
☐ NON-PARTICIPATING (MAINTENANCE) ☐ NON-PARTICIPATING

FEDERAL SEGREGATION (if more than one Funding Source or P.I.P. type)
☑ CCO FUNDED PER CONTRACT ☐ CCO FUNDED AS FOLLOWS

FEDERAL FUNDING SOURCE	PERCENT

STATE OF CALIFORNIA - DEPARTMENT OF TRANSPORTATION

CONTRACT CHANGE ORDER

Change Requested by: Engineer

CCO 1	Suppl. No. 1	Contract No. 04 - 0120F4	Road SF-80-13.2/13.9	FED. AID LOC.:

To: **AMERICAN BRIDGE/FLUOR ENTERPRISES INC A JOINT VENT**

You are directed to make the following changes from the plans and specifications or do the following described work not included in the plans and specifications for this contract. ***NOTE: This change order is not effective until approved by the Engineer.***

Description of work to be done, estimate of quantities and prices to be paid. (Segregate between additional work at contract price, agreed price and force account.) Unless otherwise stated, rates for rental of equipment cover only such time as equipment is actually used and no allowance will be made for idle time. This last percentage shown is the net accumulated increase or decrease from the original quantity in the Engineer's Estimate.

Extra Work at Force Account:

Provide Additional Funds.

Estimated cost of Extra Work at Force Account $500,000.00

Estimated Cost: Increase ☑ **Decrease** ☐ **$500,000.00**

By reason of this order the time of completion will be adjusted as follows: 0 days

Submitted by

Signature	Resident Engineer For Gary Pursell, P.E., Sup.T.E.	Date 11/3/08

Approval Recommended by

Signature	Supervising Bridge Engineer Richard Morrow, Sup. BE	Date 11/3/08

Engineer Approval by

Signature	Principal Transporation Engineer Peter Siegenthaler, Prin. TE	Date 11/5/08

We the undersigned contractor, have given careful consideration to the change proposed and agree, if this proposal is approved, that we will provide all equipment, furnish the materials, except as may otherwise be noted above, and perform all services necessary for the work above specified, and will accept as full payment therefor the prices shown above.

NOTE: If you, the contractor, do not sign acceptance of this order, your attention is directed to the requirements of the specifications as to proceeding with the ordered work and filing a written protest within the time therein specified.

Contractor Acceptance by

Signature	(Print name and title)	Date
NOT REQUIRED		

STATE OF CALIFORNIA - DEPARTMENT OF TRANSPORTATION

CONTRACT CHANGE ORDER MEMORANDUM

DATE: 11/4/2008 Page 1 of 1

TO: Pete Siegenthaler, Prin. TE / Gary Pursell, P.E., Sup T.E.	FILE: E.A. 04 - 0120F4
FROM: Gary Pursell, P.E., Sup.T.E.	CO-RTE-PM SF-80-13.2/13.9
	FED. NO.
CCO#: 1 SUPPLEMENT#: 1 Category Code: AJZZ	CONTINGENCY BALANCE (incl. this change) $123,658,113.40
COST: $500,000.00 INCREASE ☑ DECREASE ☐	HEADQUARTERS APPROVAL REQUIRED? ☑ YES ☐ NO
SUPPLEMENTAL FUNDS PROVIDED: $7,600.00	IS THIS REQUEST IN ACCORDANCE WITH ENVIRONMENTAL DOCUMENTS? ☑ YES ☐ NO
CCO DESCRIPTION: Provide Additional Funds	**PROJECT DESCRIPTION:** CONSTRUCT SELF-ANCHORED SUSPENSION BRIDGE

Original Contract Time:	Time Adj. This Change:	Previously Approved CCO Time Adjustments:	Percentage Time Adjusted: (including this change)	Total # of Unreconciled Deferred Time CCO(s): (including this change)
2490 Day(s)	0 Day(s)	30 Day(s)	1 %	2

THIS CHANGE ORDER PROVIDES FOR:

Providing additional funds to maintain the roadway and provide additional traffic control, construction area signs, and/or other traffic control devices not otherwise provided in the contract. In addition, this change order reimburses the Contractor for the State's share of flagging costs in accordance with Section 12-2.02, "Flagging Cost", of the Standard Specifications.

Traffic control will be required on and around the San Francisco Oakland Bay Bridge. This work includes, but is not limited to, traffic control for concrete pours, temporary channel buoys and public convenience on Yerba Buena Island / Treasure Island not anticipated in the original change order.

Labor, equipment and material approved by the Engineer, as necessary will be paid in accordance with the provisions of Section 5-1.24, "Force Account Payment" of the Special Provisions.

This work is not covered by any contract items. Therefore, payment for this work will be at Extra Work at Force Account for an estimated cost of $500,000.00. Cumulative total of CCO 1 and this supplement is $600,000.00, of which $107,600.00 in supplemental funds were allotted for this work. The remaining balance of $492,400.00 will be financed from the contingency funds. A detailed cost analysis is on file in the project records.

No time adjustment is warranted as this change order does not affect the controlling operation.

Design and Maintenance concurrence are not needed for this change order, for this change order is part of the supplemental work associated with this project.

This change order received HQ I&A on November 4, 2008.

CONCURRED BY:			
Construction Engineer:	Res. Eng., Gary Pursell, Sup. TE	Date	11/3/08
Bridge Engineer:	Struct Rep, Rick Morrow, Sup TE	Date	11/3/08
Project Engineer:		Date	
Project Manager:	Proj Manager, Ken Terpstra	Date	11/3/08
FHWA Rep.:		Date	
Environmental:		Date	
Other (specify):	PCE, Pete Siegenthaler, Prin TE	Date	11/3/08
Other (specify):	HQ, Patrick Treacy	Date	11/3/08
District Prior Approval By:		Date	
HQ (Issue Approve) By:	HQ Bob Molera	Date	11/4/08
Resident Engineer's Signature: Gary Pursell		Date	11/5/08

ESTIMATE OF COST

	THIS REQUEST	TOTAL TO DATE
ITEMS	$0.00	$0.00
FORCE ACCOUNT	$500,000.00	$600,000.00
AGREED PRICE	$0.00	$0.00
ADJUSTMENT	$0.00	$0.00
TOTAL	$500,000.00	$600,000.00

FEDERAL PARTICIPATION

☐ PARTICIPATING ☐ PARTICIPATING IN PART ☑ NONE
☐ NON-PARTICIPATING (MAINTENANCE) ☐ NON-PARTICIPATING

FEDERAL SEGREGATION (if more than one Funding Source or P.I.P. type)
☐ CCO FUNDED PER CONTRACT ☐ CCO FUNDED AS FOLLOWS

FEDERAL FUNDING SOURCE	PERCENT

ADA Notice: For individuals with sensory disabilities, this document is available in alternate formats. For information call: (916) 654-6410 or TDD (916) 654-3880 or write Records and Forms Management, 1120 N Street, MS-89, Sacramento, CA 95814.

CONTRACT CHANGE ORDER

Change Requested by: Engineer

CCO: 2	Suppl. No. 0	Contract No. 04 - 0120F4	Road SF-80-13.2/13.9	FED. AID LOC.:

To: AMERICAN BRIDGE/FLUOR ENTERPRISES INC A JOINT VENTURE

You are directed to make the following changes from the plans and specifications or do the following described work not included in the plans and specifications for this contract. ***NOTE: This change order is not effective until approved by the Engineer.***

Description of work to be done, estimate of quantities and prices to be paid. (Segregate between additional work at contract price, agreed price and force account.) Unless otherwise stated, rates for rental of equipment cover only such time as equipment is actually used and no allowance will be made for idle time. This last percentage shown is the net accumulated increase or decrease from the original quantity in the Engineer's Estimate.

Extra Work at Force Account:

In accordance with Section 10-1.02, "WATER POLLUTION CONTROL", of the Special Provisions, perform the following work:

1. Provide storm water sampling and analysis per the approved Storm Water Pollution Prevention Plan.

2. Reimburse the Contractor for an ordered change when a change requires a new item which is not on the approved Water Pollution Control Cost Break-Down Table.

3. Maintain temporary water pollution control practices as shown in the approved Storm Water Pollution Prevention Plan.

Labor, equipment and material approved by the Engineer, for storm water sampling and analysis, as well as for an ordered change that requires a new item which is not on the approved cost break-down, will be paid in accordance with the provisions of Section 5-1.24, "Force Account Payment", of the Special Provisions and Section 4-1.03D, "Extra Work", of the Standard Specifications.

The cost to maintain temporary water pollution control practices as deemed necessary in the approved Storm Water Pollution Prevention Plan, shall be shared equally between the State and the Contractor and will be paid in accordance with Section 5-1.24, "Force Account Payment", of the Special Provisions and Section 4-1.03D, "Extra Work", of the Standard Specifications.

Ordered changes that increase or decrease the quantity of an approved cost breakdown item will be paid either as an adjustment of compensation or through the various items involved.

Estimated cost of Extra Work at Force Account $50,000.00

Estimated Cost: **Increase** ☑ **Decrease** ☐ **$50,000.00**

By reason of this order the time of completion will be adjusted as follows: 0 days

Submitted by

Signature Gary Pursell	**Resident Engineer:** Gary Pursell	Date 9/28/06

Approval Recommended by

Signature Gary Pursell	**Construction Engineer:** Gary Pursell	Date 9/28/06

Engineer Approval by

Signature Gary Pursell	**(Print name and title)** Gary Pursell - Construction Engineer	Date 9/28/06

We the undersigned contractor, have given careful consideration to the change proposed and agree, if this proposal is approved, that we will provide all equipment, furnish the materials, except as may otherwise be noted above, and perform all services necessary for the work above specified, and will accept as full payment therefor the prices shown above.

NOTE: If you, the contractor, do not sign acceptance of this order, your attention is directed to the requirements of the specifications as to proceeding with the ordered work and filing a written protest within the time therein specified.

Contractor Acceptance by

Signature Michael D. Flowers	**(Print name and title)** Michael D. Flowers Project Director	Date 9.28.06

STATE OF CALIFORNIA - DEPARTMENT OF TRANSPORTATION

CONTRACT CHANGE ORDER MEMORANDUM

DATE: 9/12/2006 Page 1 of 1

TO: PETER SIEGENTHALER / Gary Pursell	FILE: **E.A.** 04 - 0120F4
FROM: Gary Pursell	**CO-RTE-PM** SF-80-13.2/13.9
	FED. NO.
CCO#: **2** SUPPLEMENT#: **0** Category Code: **CCTI**	CONTINGENCY BALANCE (incl. this change) **$147,449,880.00**
COST: **$50,000.00** INCREASE ☑ DECREASE ☐	HEADQUARTERS APPROVAL REQUIRED? ☐ YES ☑ NO
SUPPLEMENTAL FUNDS PROVIDED: **$21,500.00**	IS THIS REQUEST IN ACCORDANCE WITH ENVIRONMENTAL DOCUMENTS? ☑ YES ☐ NO
CCO DESCRIPTION: SWPPP Control and Maintenance	**PROJECT DESCRIPTION:** CONSTRUCT SELF-ANCHORED SUSPENSION BRIDGE

LOCATION: IN SAN FRANCISCO COUNTY IN SAN FRANCISCO FROM 0.6 KM TO 1.3 KM EAST OF THE YERBA BUENA TUNNEL EAST PORTAL

THIS CHANGE ORDER PROVIDES FOR:
Conformance to the RWQCB permit for the SAS project. This change order covers the following work:

In accordance with Section 10-1.02, "WATER POLLUTION CONTROL", of the Special Provisions, perform the following work:

1. Provide storm water sampling and analysis per the approved Storm Water Pollution Prevention Plan.
2. Reimburse the Contractor for an ordered change when a change requires a new item which is not on the approved Water Pollution Control Cost Break-Down Table.
3. Maintain the temporary water pollution control practices as shown in the approved Storm Water Pollution Prevention Plan.

As stated in Section 10-1.02, "Water Pollution Control", of the Special Provisions, the cost of storm water sampling and analysis, as well as the cost for an ordered change that requires a new item which is not on the approved cost break-down, will be paid as Extra Work. The cost for maintaining temporary water pollution control practices shown under Section 10-1.02, "Water Pollution Control", is to be shared equally between the State and the Contractor.

This work is not covered by any contract items. Therefore, payment for this work will be at Extra Work at Force Account for an estimated cost of $50,000.00, which can be financed from the contingency fund, of which $21,500.00 of supplemental funds were allotted for this work.

No time adjustment is warranted, as this change order does not affect the controlling operation.

Design and Maintenance concurrence are not needed for this change order, since this change is addressed in the supplemental funds, compliance with the RWQCB permit and contract special provisions. This change order was field approved by the Resident Engineer on September 28, 2006.

CONCURRED BY:

Construction Engineer: Gary Pursell	Date9/28/2006
Bridge Engineer:	Date
FHWA Representative:	Date
Project Engineer:	Date
Other (specify):	Date
	Date
	Date
District Prior Approval By:	Date
HQ (Issue Approve) By:	Date
Resident Engineer's Signature:	Date 9/28/06

ESTIMATE OF COST

	THIS REQUEST	TOTAL TO DATE
ITEMS	$0.00	$0.00
FORCE ACCOUNT	$50,000.00	$50,000.00
AGREED PRICE	$0.00	$0.00
ADJUSTMENT	$0.00	$0.00
TOTAL	$50,000.00	$50,000.00

FEDERAL PARTICIPATION

☐ PARTICIPATING ☐ PARTICIPATING IN PART ☑ NONE
☐ NON-PARTICIPATING (MAINTENANCE) ☐ NON-PARTICIPATING

FEDERAL SEGREGATION (if more than one Funding Source or P.I.P. type)
☑ CCO FUNDED PER CONTRACT ☐ CCO FUNDED AS FOLLOWS

FEDERAL FUNDING SOURCE	PERCENT

CONTRACT CHANGE ORDER

Change Requested by: Engineer

CCO: 2 Suppl. No. 1 Contract No. 04 – 0120F4 Road SF-80-13.2/13.9 FED. AID LOC.:

To: **AMERICAN BRIDGE/FLUOR ENTERPRISES INC A JOINT VENTURE**

You are directed to make the following changes from the plans and specifications or do the following described work not included in the plans and specifications for this contract. ***NOTE: This change order is not effective until approved by the Engineer.***

Description of work to be done, estimate of quantities and prices to be paid. (Segregate between additional work at contract price, agreed price and force account.) Unless otherwise stated, rates for rental of equipment cover only such time as equipment is actually used and no allowance will be made for idle time. This last percentage shown is the net accumulated increase or decrease from the original quantity in the Engineer's Estimate

Extra Work at Force Account:

As directed by the Engineer, perform extra work to comply with revised Construction General Permit for storm water discharges.

Revise Special Provisions Section 5-1.32 "RELATIONS WITH REGIONAL WATER QUALITY CONTROL BOARD" and Section 10-1.02 "WATER POLLUTION CONTROL," as shown below.

5-1.32 RELATIONS WITH REGIONAL WATER QUALITY CONTROL BOARD

This project is located within an area controlled by the Regional Water Quality Control Board, San Francisco Bay Region (RWQCB). A RWQCB Order and Waste Discharge Requirements have been issued covering work to be performed under this contract. The Contractor shall be fully informed of all rules, regulations and conditions that may govern the Contractor's operations in said area and shall conduct the Contractor's work accordingly. Said documents shall be considered a part of, and shall become, an integral part of the special provisions and contract for this project.

~~Copies of the Order and the Waste Discharge Requirements may be obtained at the Department of Transportation, Plans and Bid Documents, Room 200, Transportation Building, 1120 N Street, P.O. Box 942874, Sacramento, California 94274-0001, Telephone No. (916) 654-4490, and will be available for inspection at the office of the Duty Senior at the District 4 Office, 111 Grand Avenue, Oakland, CA 94612, email: duty_senior_district04@dot.ca.gov, telephone number (510) 286-5209.~~

The Caltrans permit references and incorporates by reference the current statewide general permit issued by the SWRCB titled "Order No. 2009-0009-DWQ, National Pollutant Discharge Elimination System (NPDES) General Permit No. CAS000002, Waste Discharge Requirements for Discharges of Storm Water Runoff Associated with Construction and Land Disturbance Activities" that regulates discharges of storm water and non-storm water from construction activities disturbing one or more acres of soil in a common plan of development. Copies of the statewide permit and its modifications are available for review from the SWRCB, Division of Water Quality, 1001 "I" Street, P.O. Box 100, Sacramento, California 95812-0100, Telephone fax: (916) 341-5463 and may also be obtained at:

http://www.waterboards.ca.gov/water_issues/programs/stormwater/

The Contractor's attention is directed to Sections 7-1.11, "Preservation of Property," and 7-1.12, "Indemnification and Insurance", of the Standard Specifications.

The Contractor's attention is also directed to Section 8-1.06, "Time of Completion," of the Standard Specifications. Days during which the Contractor's operations are restricted in the floodway by the requirements of this section, shall be considered to be nonworking days if these restrictions cause a delay in the current controlling operation or operations.

Any modifications to the Order which are proposed by the Contractor shall be submitted in writing to the Engineer for transmittal to the RWQCB for their consideration. No additional time or compensation will be allowed for delays caused by the Contractor's proposed modifications to the Order.

When the Engineer notifies the Contractor that a modification to the Order is under consideration, no work will be allowed on the proposed modification until the Department of Transportation takes action on the proposed modification.

Any modifications to any agreement between the Department and the RWQCB shall be fully binding on the Contractor, and the provisions of this section shall be made a part of every subcontract executed pursuant to this contract. Such modifications will be made in accordance with Section, 4-1.03 "Changes" of the Standard Specifications

Full compensation for conforming to the requirements of this section shall be considered as included in the prices paid for the various contract items of work involved and no additional compensation will be allowed therefor.

10-1.02 WATER POLLUTION CONTROL

Water pollution control work shall conform to the provisions in Section 7-1.01G, "Water Pollution," of the Standard Specifications and these special provisions.

This project lies within the boundaries of the San Francisco Bay Regional Water Quality Control Board (RWQCB).

The State Water Resources Control Board (SWRCB) has issued a permit to the Department which governs storm water and non-storm water discharges from its properties, facilities and activities. The Department's Permit is entitled: "Order No. 2009-0009-DWQ, National Pollutant Discharge Elimination System (NPDES) General Permit No. CAS000002, ~~"Order No. 99-06-DWQ, NPDES No. CAS000003, National Pollutant Discharge Elimination System (NPDES) Permit,~~ Storm Water Permit and Waste Discharge Requirements (WDRs) for the State of California, Department of Transportation Properties, Facilities, and Activities." ~~Copies of the Department's Permit are available for review from the SWRCB, Storm Water Permit Unit, 1001 "I" Street, P.O. Box 1977, Sacramento, California 95812-1977, Telephone: (916) 341-5254, and may also be obtained from the SWRCB Internet website at: http://www.swrcb.ca.gov/stormwtr/caltrans.html.~~ Copies of the statewide permit and its modifications are available for review from the SWRCB, Division of Water Quality, 1001 "I" Street, P.O. Box 100, Sacramento, California 95812-0100, Telephone fax: (916) 341-5463 and may also be obtained at: http://www.waterboards.ca.gov/water_issues/programs/stormwater

The Department's Permit references and incorporates by reference the current Statewide General Permit issued by the SWRCB entitled "Order No. 2009-0009-DWQ, National Pollutant Discharge Elimination System (NPDES) General Permit No. CAS000002, ~~"Order No. 99-08-DWQ, National Pollutant Discharge Elimination System (NPDES) General Permit No. CAS000002,~~ Waste Discharge Requirements (WDRs) for Discharges of Storm Water Associated with Construction Activity," which regulates discharges of storm water and non-storm water from construction activities disturbing 0.4-hectare or more of soil in a common plan of development. ~~Sampling and analysis requirements as specified in SWRCB Resolution No. 2001-46 are added to the Statewide General Permit. Copies of the Statewide General Permit and modifications thereto are available for review from the SWRCB, Storm Water Permit Unit, 1001 "I" Street, P.O. Box 1977, Sacramento, California 95812-1977, Telephone: (916) 341-5254 and may also be obtained from the SWRCB Internet website at: http://www.swrcb.ca.gov/stormwtr/construction.html.~~

The NPDES permits that regulate this project, as referenced above, are hereafter collectively referred to as the "Permits."

This project shall conform to the Permits and modifications thereto. The Contractor shall maintain copies of the Permits at the project site and shall make the Permits available during construction.

The Permits require the preparation of a Storm Water Pollution Prevention Plan (SWPPP). The SWPPP shall be prepared in conformance with the requirements of the Permits, the Department's "Storm Water Pollution Prevention Plan (SWPPP) and Water Pollution Control Program (WPCP) Preparation Manual," and the Department's "Construction Site Best Management Practices (BMPs) Manual," including addenda to those permits and manuals issued up to and including the date of advertisement of the project. These manuals are hereinafter referred to, respectively, as the "Preparation Manual" and the "Construction Site BMPs Manual," and collectively, as the "Manuals." Copies of the Manuals may be obtained from the Department of Transportation, Material Operations Branch, Publication Distribution Unit, 1900 Royal Oaks Drive, Sacramento, California 95815, Telephone: (916) 445-3520, and may also be obtained from the Department's Internet website at: http://www.dot.ca.gov/hq/construc/stormwater/stormwater1.htm.

The Contractor shall know and fully comply with applicable provisions of the Permits and all modifications thereto, the Manuals, and Federal, State, and local regulations and requirements that govern the Contractor's operations and storm water and non-storm water discharges from both the project site and areas of disturbance outside the project limits during construction. Attention is directed to Sections 7-1.01, "Laws to be Observed," and 7-1.12, "Indemnification and Insurance," of the Standard Specifications.

The Permits shall apply to storm water and certain permitted non-storm water discharges from areas outside the project site which are directly related to construction activities for this contract including, but not limited to, asphalt batch plants, material borrow areas, concrete plants, staging areas, storage yards and access roads. The Contractor shall comply with the Permits and the Manuals for those areas and shall implement, inspect and maintain the required water pollution control practices. The Engineer shall be allowed full access to these areas during construction to assure Contractor's proper implementation of water pollution control practices. Installing, inspecting and maintaining water pollution control practices on areas outside the highway right of way not specifically arranged and provided for by the Department for the execution of this contract, will not be paid for.

The Contractor shall be responsible for penalties assessed or levied on the Contractor or the Department as a result of the Contractor's failure to comply with the provisions in this section "Water Pollution Control" including, but not limited to, compliance with the applicable provisions of the Permits, the Manuals, and Federal, State and local regulations and requirements as set forth therein.

Penalties as used in this section, "Water Pollution Control," shall include fines, penalties and damages, whether proposed, assessed, or levied against the Department or the Contractor, including those levied under the Federal Clean Water Act and the State Porter-Cologne Water Quality Control Act, by governmental agencies or as a result of citizen suits. Penalties shall also include payments made or costs incurred in settlement for alleged violations of the Permits, the Manuals, or applicable laws, regulations, or requirements. Costs incurred could include sums spent instead of penalties, in mitigation or to remediate or correct violations.

RETENTION OF FUNDS

(No change order revisions under this heading)

STORM WATER POLLUTION PREVENTION PLAN PREPARATION, APPROVAL AND AMENDMENTS

As part of the water pollution control work, a Storm Water Pollution Prevention Plan (SWPPP) is required for this contract. The SWPPP shall conform to the provisions in Section 7-1.01G, "Water Pollution," of the Standard Specifications, the requirements in the Manuals, the requirements of the Permits, and these special provisions. Upon the Engineer's approval of the SWPPP, the SWPPP shall be considered to fulfill the provisions in Section 7-1.01G, "Water Pollution," of the Standard Specifications for development and submittal of a Water Pollution Control Program.

No work having potential to cause water pollution shall be performed until the SWPPP has been approved by the Engineer. Approval shall not constitute a finding that the SWPPP complies with applicable requirements of the Permits, the Manuals and applicable Federal, State and local laws, regulations, and requirements.

The Contractor shall designate a Water Pollution Control Manager. The Water Pollution Control Manager shall be responsible for the preparation of the SWPPP and required modifications or amendments, and shall be responsible for the implementation and adequate functioning of the various water pollution control practices employed. The Contractor may designate different Water Pollution Control Managers to prepare the SWPPP and to implement the water pollution control practices. The Water Pollution Control Managers shall serve as the primary contact for issues related to the SWPPP or its implementation. The Contractor shall submit to the Engineer a statement of qualifications, describing the training, previous work history and expertise of the individual selected by the Contractor to serve as Water Pollution Control Manager. The Water Pollution Control Manager shall have a minimum of 24 hours of formal storm water management training or certification as a Certified Professional in Erosion and Sediment Control (CPESC). The Engineer will reject the Contractor's submission of a Water Pollution Control Manager if the submitted qualifications are deemed to be inadequate.

The SWPPP shall apply to the areas within and those outside of the highway right of way that are directly related to construction operations including, but not limited to, asphalt batch plants, material borrow areas, concrete plants, staging areas, storage yards, and access roads.

The SWPPP shall incorporate water pollution control practices in the following categories:

A. Soil stabilization.
B. Sediment control.
C. Wind erosion control.
D. Tracking control.
E. Non-storm water management.
F. Waste management and materials pollution control.

The following contract items of work shall be incorporated into the SWPPP as "Temporary Water Pollution Control Practices": Temporary Concrete Washout Facility, Temporary Cover, Move In/Move Out (Temporary Erosion Control), and Temporary Perimeter Barrier (Type WM-1.8). The Contractor's attention is directed to the special provisions provided for Temporary Water Pollution Control Practices.

The following contract items of work, as shown on the project plans or as specified elsewhere in these special provisions, shall be identified in the SWPPP as permanent water pollution control practices: Erosion Control (Type B) and Erosion Control (Type D). These permanent water pollution control practices shall be utilized during the construction period. The Contractor shall maintain and protect the permanent water pollution control practices

throughout the duration of the project and shall restore these controls to the lines, grades and condition shown on the plans prior to acceptance of the contract.

The SWPPP shall include, but not be limited to, the items described in the Manuals, Permits and related information contained in the contract documents.

The Contractor shall develop and include in the SWPPP the Construction Site Monitoring Program ~~Sampling and Analysis Plan(s)~~ as required by the Permits, and modifications thereto, and as required in " Construction Site Monitoring ~~Sampling and Analytical~~ Requirements" of this section.

The Contractor shall develop a Water Pollution Control Schedule that describes the timing of grading or other work activities that could affect water pollution. The Water Pollution Control Schedule shall be updated by the Contractor to reflect changes in the Contractor's operations that would affect the necessary implementation of water pollution control practices.

The Contractor shall complete the "Construction Site BMPs Consideration Checklist" presented in the Preparation Manual and shall incorporate water pollution control practices into the SWPPP. Water pollution control practices include the "Minimum Requirements" and other Contractor-selected water pollution control practices from the "Construction Site BMPs Consideration Checklist" and the "Project-Specific Minimum Requirements" identified in the Water Pollution Control Cost Break-Down of this section.

No later than 20 days after the approval of the contract or six months prior to beginning work having potential to cause water pollution, whichever is later, the Contractor shall submit ~~3~~5 copies of the complete draft SWPPP to the Engineer. The Engineer will have 50 days to submit the SWPPP to regulatory agencies for plan review and to review the SWPPP. If revisions are required, as determined by the Engineer, the Contractor shall revise and resubmit the SWPPP within 15 days of receipt of the Engineer's comments. The Engineer will have 15 days to review the revisions. Upon the Engineer's approval of the SWPPP, 4 approved copies of the SWPPP, incorporating the required changes, shall be submitted to the Engineer. In order to allow construction activities to proceed, the Engineer may conditionally approve the SWPPP while minor revisions are being completed. In the event the Engineer fails to complete the review within the time allowed, and if, in the opinion of the Engineer, completion of the work is delayed or interfered with by reason of the Engineer's delay in completing the review, the Contractor will be compensated for resulting losses, and an extension of time will be granted, in the same manner as provided for in Section 8-1.09, "Right of Way Delays," of the Standard Specifications.

The Contractor shall prepare an amendment to the SWPPP when there is a change in construction activities or operations which may affect the discharge of pollutants to surface waters, ground waters, municipal storm drain systems, or when the Contractor's activities or operations violate a condition of the Permits, or when directed by the Engineer. Amendments shall identify additional water pollution control practices or revised operations, including those areas or operations not identified in the initially approved SWPPP. Amendments to the SWPPP shall be prepared and submitted for review and approval within a time approved by the Engineer, but in no case longer than the time specified for the initial submittal and review of the SWPPP. ~~At a minimum, the SWPPP shall be amended annually and submitted to the Engineer 25 days prior to the defined rainy season.~~

The Contractor shall keep one copy of the approved SWPPP and approved amendments at the project site. The SWPPP shall be made available upon request by a representative of the Regional Water Quality Control Board, State Water Resources Control Board, United States Environmental Protection Agency, or the local storm water management agency. Requests by the public shall be directed to the Engineer.

COST BREAK-DOWN

(No change order revisions under this heading)

SWPPP IMPLEMENTATION

Unless otherwise specified, upon approval of the SWPPP, the Contractor shall be responsible throughout the duration of the project for installing, constructing, inspecting, maintaining, removing, and disposing of the water pollution control practices specified in the SWPPP and in the amendments. Unless otherwise directed by the Engineer, the Contractor's responsibility for SWPPP implementation shall continue throughout temporary suspensions of work ordered in conformance with the provisions in Section 8-1.05, "Temporary Suspension of Work," of the Standard Specifications. Requirements for installation, construction, inspection, maintenance, removal, and disposal of water pollution control practices shall conform to the requirements in the Manuals and these special provisions.

If the Contractor or the Engineer identifies a deficiency in the implementation of the approved SWPPP or amendments, the deficiency shall be corrected immediately unless requested by the Contractor and approved by the Engineer in writing, but shall be corrected prior to the onset of precipitation. If the Contractor fails to correct the identified deficiency by the date agreed or prior to the onset of precipitation, the project shall be in

nonconformance with this section, "Water Pollution Control." Attention is directed to Section 5-1.01, "Authority of Engineer," of the Standard Specifications, and to "Retention of Funds" of this section for possible nonconformance penalties.

If the Contractor fails to conform to the provisions of this section, "Water Pollution Control," the Engineer may order the suspension of construction operations until the project complies with the requirements of this section.

~~Implementation of water pollution control practices may vary by season. The Construction Site BMPs Manual and these special provisions shall be followed for control practice selection of year-round, rainy season and non-rainy season water pollution control practices.~~

Year-Round Implementation Requirements

The Contractor shall have a year-round program for implementing, inspecting and maintaining water pollution control practices for wind erosion control, tracking control, non-storm water management, and waste management and materials pollution control.

The National Weather Service weather forecast shall be monitored and used by the Contractor on a daily basis. An alternative weather forecast proposed by the Contractor may be used if approved by the Engineer. If precipitation is predicted, the necessary water pollution control practices shall be deployed prior to the onset of the precipitation.

~~Disturbed soil areas shall be considered active whenever the soil disturbing activities have occurred, continue to occur or will occur during the ensuing 21 days. Non-active areas shall be protected as prescribed in the Construction Site BMPs Manual within 14 days of cessation of soil disturbing activities or prior to the onset of precipitation, whichever occurs first.~~

The contractor may discontinue construction activities for a disturbed soil area for up to 14 days and the disturbed soil area will still be considered active. When construction activities in a disturbed soil area have been completed, the contractor will implement appropriate water pollution control practices within 14 days, or before predicted precipitation, whichever occurs first.

In order to provide effective erosion control, the Contractor may be directed by the Engineer to apply permanent erosion control in small or multiple units. The Contractor's attention is directed to "Erosion Control (Type C)," "Erosion Control (Type D)," "Fiber Rolls," and "Move-In/Move-Out (Erosion Control)" of these special provisions.

The Contractor shall implement, maintain and inspect the following temporary sediment control practices on a year-round basis. The listed practices shall remain in place until their use is no longer needed, as determined by the Engineer.

YEAR-ROUND SEDIMENT CONTROL PRACTICES	LOCATION USED
SC-7 Street Sweeping and Vacuuming	Entrance/Exit to paved roadways
TC-1 Stabilized Construction Entrance/Exit	Construction access from paved roads
TC-2 Stabilized Construction Roadway	Unstable access roadways and work areas
Temporary Perimeter Barrier`	At the limits of earthwork activity

~~**Rainy Season Implementation Requirements**~~

~~Soil stabilization and sediment control practices conforming to the requirements of these special provisions shall be provided throughout the rainy season, defined as between October 15 and April 15.~~

~~An implementation schedule of required soil stabilization and sediment control practices for disturbed soil areas shall be completed no later than 20 days prior to the beginning of each rainy season. The implementation schedule shall identify the soil stabilization and sediment control practices and the dates when the implementation will be 25 percent, 50 percent and 100 percent complete, respectively. For construction activities beginning during the rainy season, the Contractor shall implement applicable soil stabilization and sediment control practices. The Contractor shall implement soil stabilization and sediment control practices a minimum of 10 days prior to the start of the rainy season.~~

~~Throughout the defined rainy season, the active disturbed soil area of the project site shall be not more than 2 hectares. The Engineer may approve, on a case-by-case basis, expansions of the active disturbed soil area~~

~~limit. Soil stabilization and sediment control materials shall be maintained on site sufficient to protect disturbed soil areas. A detailed plan for the mobilization of sufficient labor and equipment shall be maintained to deploy the water pollution control practices required to protect disturbed soil areas prior to the onset of precipitation.~~

~~**Non-Rainy Season Implementation Requirements**~~

~~The non-rainy season shall be defined as days outside the defined rainy season. The Contractor's attention is directed to the Construction Site BMPs Manual for soil stabilization and sediment control implementation requirements on disturbed soil areas during the non-rainy season. Disturbed soil areas within the project shall be protected in conformance with the requirements in the Construction Site BMPs Manual with an effective combination of soil stabilization and sediment control.~~

MAINTENANCE
(No change order revisions under this heading)

REPORTING REQUIREMENTS
(No change order revisions under this heading)

CONSTRUCTION SITE MONITORING ~~SAMPLING AND ANALYTICAL~~ REQUIREMENTS

The Contractor is required to implement specific construction site monitoring ~~sampling and analytical~~ procedures to determine whether BMPs implemented on the construction site are:

A. preventing pollutants that are known or should be known by permittees to occur on construction sites that are not visually detectable in storm water discharges, to cause or contribute to exceedances of water quality objectives, and
B. preventing further impairment by sediment in storm waters discharged into the San Francisco Bay due to sediment, siltation or turbidity.

Non-Visible Pollutants

The project has the potential to discharge non-visible pollutants in storm water from the construction site. The project SWPPP shall contain a Construction Site Monitoring Program (CSMP) ~~Sampling and Analysis Plan (SAP)~~ that describes the sampling and analysis strategy and schedule to be implemented on the project for monitoring non-visible pollutants in conformance with this section.

The CSMP ~~SAP~~ shall identify potential non-visible pollutants that are known or should be known to occur on the construction site associated with the following: (1) construction materials, wastes or operations; (2) known existing contamination due to historical site usage; or (3) application of soil amendments, including soil stabilization products, with the potential to alter pH or contribute toxic pollutants to storm water. Planned material and waste storage areas, locations of known existing contamination, and areas planned for application of soil amendments shall be shown on the SWPPP Water Pollution Control Drawings.

The CSMP ~~SAP~~ shall identify a sampling schedule for collecting a sample down gradient from the applicable non-visible pollutant source and a sufficiently large uncontaminated control sample during the first two hours of discharge from rain events during daylight hours which result in a sufficient discharge for sample collection. If run-on occurs onto the non-visible pollutant source, a run-on sample that is immediately down gradient of the run-on to the Department's right of way shall be collected. A minimum of 72 hours of dry weather shall occur between rain events to distinguish separate rain events.

The CSMP ~~SAP~~ shall state that water quality sampling will be triggered when any of the following conditions are observed during the required storm water inspections conducted before or during a rain event:

A. Materials or wastes containing potential non-visible pollutants are not stored under watertight conditions.
B. Materials or wastes containing potential non-visible pollutants are stored under watertight conditions, but (1) a breach, leakage, malfunction, or spill is observed; and (2) the leak or spill has not been cleaned up prior to the rain event; and (3) there is the potential for discharge of non-visible pollutants to surface waters or drainage system.
C. Construction activities, such as application of fertilizer, pesticide, herbicide, methyl methacrylate concrete sealant, or non-pigmented curing compound have occurred during a rain event or within 24 hours preceding a rain event, and there is the potential for discharge of pollutants to surface waters or drainage system.

D. Soil amendments, including soil stabilization products, with the potential to alter pH levels or contribute toxic pollutants to storm water runoff have been applied, and there is the potential for discharge of pollutants to surface waters or drainage system (unless independent test data are available that demonstrate acceptable concentration levels of non-visible pollutants in the soil amendment).
E. Storm water runoff from an area contaminated by historical usage of the site is observed to combine with storm water, and there is the potential for discharge of pollutants to surface waters or drainage system.

The CSMP ~~SAP~~ shall identify sampling locations for collecting down gradient and control samples, and the rationale for their selection. The control sampling location shall be selected where the sample does not come into contact with materials, wastes or areas associated with potential non-visible pollutants or disturbed soil areas. Sampling locations shall be shown on the SWPPP Water Pollution Control Drawings. Only trained personnel shall collect water quality samples and be identified in the CSMP ~~SAP~~. Qualifications of designated sampling personnel shall describe training and experience, and shall be included in the SWPPP. The CSMP ~~SAP~~ shall state monitoring preparation, sample collection procedures, quality assurance/quality control, sample labeling procedures, sample collection documentation, sample shipping and chain of custody procedures, sample numbering system, and reference the construction site health and safety plan.

The CSMP ~~SAP~~ shall identify the analytical method to be used for analyzing down gradient and control samples for potential non-visible pollutants on the project. For samples analyzed in the field by sampling personnel, collection, analysis, and equipment calibration shall be in conformance with the Manufacturer's specifications. For samples that will be analyzed by a laboratory, sampling, preservation, and analysis shall be performed by a State-certified laboratory in conformance with 40 CFR 136. The CSMP ~~SAP~~ shall identify the specific State-certified laboratory, sample containers, preservation requirements, holding times, and analysis method to be used. A list of State-certified laboratories that are approved by the Department is available at the following internet site: http://www.dhs.ca.gov/ps/ls/elap/html/lablist_county.htm.

Analytical Results and Evaluation

The Contractor shall submit a hard copy and electronic copy of water quality analytical results and quality assurance/quality control data to the Engineer within 5 days of sampling for field analyses and within 30 days for laboratory analyses. Analytical results shall be accompanied by an evaluation from the Contractor to determine if down gradient samples show elevated levels of the tested parameter relative to levels in the control sample. If down gradient or downstream samples, as applicable, show increased levels, the Contractor will assess the BMPs, site conditions, and surrounding influences to determine the probable cause for the increase. As determined by the assessment, the Contractor will repair or modify BMPs to address increases and amend the SWPPP as necessary. Electronic results (in one of the following file formats: .xls, .txt, .csv, .dbs, or .mdb) shall have at a minimum the following information: sample identification number, contract number, constituent, reported value, method reference, method detection limit, and reported detection limit. The Contractor shall document sample collection during rain events.

Water quality sampling documentation and analytical results shall be maintained with the SWPPP on the project site until a Notice of Completion has been submitted and approved.

If construction activities or knowledge of site conditions change, such that discharges or sampling locations change, the Contractor shall amend the CSMP ~~SAP~~ in conformance with this section, "Water Pollution Control."

PAYMENT

(No change order revisions under this heading)

CONTRACT CHANGE ORDER

Change Requested by: Engineer

CCO: 2 Suppl. No. 1 Contract No. 04 – 0120F4 Road SF-80-13.2/13.9 FED. AID LOC.:

Labor, equipment and material authorized by the Engineer, as necessary, will be paid in accordance with the provisions of Section 4-1.03D, "Extra Work" of the Standard Specifications and Section 5-1.24, "Force Account Payment" of the Special Provisions.

Estimated Cost of Extra Work at Force Account.....$250,000.00

Estimated Cost: Increase ☒ Decrease ☐ Est. $250,000.00

By reason of this order the time of completion will be adjusted as follows: 0 days

Submitted by

Signature Kannu Balan	**Resident Engineer** Kannu Balan, Senior T.E.	**Date** 11-15-10

Approval Recommended by

Signature Kannu Balan	**Senior Transportation Engineer** Darryl Schram, Senior T.E.	**Date** 11-15-10

Engineer Approval by

Signature Pete Siegenthaler	**Principal Transportation Engineer** Peter Siegenthaler, Prin. T.E.	**Date** 2-4-2011

We the undersigned contractor, have given careful consideration to the change proposed and agree, if this proposal is approved, that we will provide all equipment, furnish the materials, except as otherwise be noted above, and perform all services necessary for the work above specified, and will accept as full payment therefor the prices shown above.

NOTE: If you, the contractor, do not sign acceptance of this order, your attention is directed to the requirements of the specifications as to proceeding with the ordered work and filing a written protest within the time therein specified.

Contractor Acceptance by

Signature	(Print name and title) BRIAN A. PETERSEN - PROJECT DIRECTOR	**Date** 03 FEB 11

STATE OF CALIFORNIA - DEPARTMENT OF TRANSPORTATION

CONTRACT CHANGE ORDER MEMORANDUM

TO: Pete Siegenthaler, Prin TE /	FILE: **E.A.** 04 - 0120F4
FROM: Kannu Balan, Senior TE	**CO-RTE-PM** SF-80-13.2/13.9
	FED. NO.
CCO#: **2** SUPPLEMENT#: **1** Category Code: **CCTI**	CONTINGENCY BALANCE (incl. this change) **$172,502,409.81**
COST: **$250,000.00** INCREASE ☑ DECREASE ☐	HEADQUARTERS APPROVAL REQUIRED? ☐ YES ☑ NO
SUPPLEMENTAL FUNDS PROVIDED: **$0.00**	IS THIS REQUEST IN ACCORDANCE WITH ENVIRONMENTAL DOCUMENTS? ☑ YES ☐ NO
CCO DESCRIPTION: SWPPP Specification Revisions	**PROJECT DESCRIPTION:** CONSTRUCT SELF-ANCHORED SUSPENSION BRIDGE

Original Contract Time:	Time Adj. This Change:	Previously Approved CCO Time Adjustments:	Percentage Time Adjusted: (including this change)	Total # of Unreconciled Deferred Time CCO(s): (including this change)
2490 Day(s)	**0** Day(s)	**501** Day(s)	**20** %	**4**

THIS CHANGE ORDER PROVIDES FOR:

As directed by the Engineer, perform extra work to comply with revised Construction General Permit for storm water discharges.

Revise Special Provisions Section 5-1.32 "RELATIONS WITH REGIONAL WATER QUALITY CONTROL BOARD."

Revise Special Provisions Section 10□1.02 "WATER POLLUTION CONTROL."

The new National Pollutant Discharge Elimination System (NPDES) General Permit for Storm Water Discharges Associated with Construction and Land Disturbance (Order No. 2009-009-DWQ), Construction General Permit (CGP) was adopted by the State Water Resources Control Board on September 9, 2009, and is effective July 1, 2010. This change order revises the CGP order number, implements year-round soil stabilization and sediment control best management practices in place of current rainy season requirements, and provides minor changes --including nomenclature changes --for existing storm water pollution prevention plans to be in compliance with the new CGP.

The new CGP does not contain a defined rainy season and therefore requires installation of soil stabilization and sediment control best management practices year-round. Soil stabilization and sediment controls must be installed on inactive areas of construction if the area is not scheduled to be re-disturbed for more than 14 days. The contractor will be compensated for additional mobilizations of crews and equipment necessary to install soil stabilization and sediment controls during the contract-specified non-rainy season. The contractor will also be compensated for any adjustments because of the need to apply soil stabilization and sediment controls on small areas versus the larger areas allowed when there was a rainy season definition.

This work will be paid as extra work at force account and the Department estimates it to total $250,000.00, which can be financed from the contingency fund. This will result in a cumulative amount of $300,000.00 for CCO 2S0 and 2S1.

No time adjustment is warranted as this change order does not affect the controlling operation.

This change order has concurrence from Peter Siegenthaler (Principal TE), Ken Terpstra (Proj. Manager), and Rich Foley (HQ Oversight). Design and Maintenance concurrence are not required for this change.

This change order is in accordance with Division of Construction CPD 10-4, dated May 24, 2010. FHWA gave blanket prior approval for this change on May 20, 2010.

ADA Notice: For individuals with sensory disabilities, this document is available in alternate formats. For information call: (916) 654-6410 or TDD (916) 654-3880 or write Records and Forms Management, 1120 N Street, MS-89, Sacramento, CA 95814.

CONCURRED BY:			
Construction Engineer:		Date	
Bridge Engineer:		Date	
Project Engineer:		Date	
Project Manager:	Proj Manager, Ken Terpstra	Date	11/4/10
FHWA Rep.:		Date	
Environmental:		Date	
Other (specify):	PCE, Pete Siegenthaler, Prin TE	Date	11/2/10
Other (specify):	HQ, Rich Foley	Date	11/3/10
District Prior Approval By:		Date	
HQ (Issue Approve) By:		Date	
Resident Engineer's Signature:		Date	
		11-15-10	

ESTIMATE OF COST

	THIS REQUEST	TOTAL TO DATE
ITEMS	$0.00	$0.00
FORCE ACCOUNT	$250,000.00	$300,000.00
AGREED PRICE	$0.00	$0.00
ADJUSTMENT	$0.00	$0.00
TOTAL	$250,000.00	$300,000.00

FEDERAL PARTICIPATION

☐ PARTICIPATING ☐ PARTICIPATING IN PART ☑ NONE
☐ NON-PARTICIPATING (MAINTENANCE) ☐ NON-PARTICIPATING

FEDERAL SEGREGATION (if more than one Funding Source or P.I.P. type)
☐ CCO FUNDED PER CONTRACT ☐ CCO FUNDED AS FOLLOWS

FEDERAL FUNDING SOURCE	PERCENT

ADA Notice: For individuals with sensory disabilities, this document is available in alternate formats. For information call: (916) 654-6410 or TDD (916) 654-3880 or write Records and Forms Management, 1120 N Street, MS-89, Sacramento, CA 95814.

CONTRACT CHANGE ORDER

Change Requested by: Engineer

CCO: 3	Suppl. No. 0	Contract No. 04 - 0120F4	Road SF-80-13.2/13.9	FED. AID LOC.:

To: **AMERICAN BRIDGE/FLUOR ENTERPRISES INC A JOINT VENTURE**

You are directed to make the following changes from the plans and specifications or do the following described work not included in the plans and specifications for this contract. ***NOTE: This change order is not effective until approved by the Engineer.***

Description of work to be done, estimate of quantities and prices to be paid. (Segregate between additional work at contract price, agreed price and force account.) Unless otherwise stated, rates for rental of equipment cover only such time as equipment is actually used and no allowance will be made for idle time. This last percentage shown is the net accumulated increase or decrease from the original quantity in the Engineer's Estimate.

Extra Work at Force Account:

In accordance with Section 5-1.11, Partnering, of the Contract Special Provisions, reimburse the Contractor for the State's share of costs involved for the initial partnering workshop and progress sessions throughout the life of the contract. In addition, compensate the Contractor for 100% of the costs involved in providing a "Training in Partnering Concepts" session.

Costs will be determined in conformance with the provisions in Section 9-1.03B, "Work Performed by Special Forces or Other Special Services," of the Standard Specifications, and paying the Contractor the State's share of the costs, except no markups will be allowed.

Estimated cost of Extra Work at Force Account $200,000.00

Estimated Cost: **Increase** ☑ **Decrease** ☐ **$200,000.00**

By reason of this order the time of completion will be adjusted as follows: 0 days

Submitted by		
Signature Gary Pursell	Resident Engineer: Gary Pursell	Date 5/22/06
Approval Recommended by		
Signature Gary Pursell	Construction Engineer: Gary Pursell	Date 5/22/06
Engineer Approval by		
Signature P. E. Siegenthaler	(Print name and title) PETER SIEGENTHALER - Chief	Date 5/25/06

We the undersigned contractor, have given careful consideration to the change proposed and agree, if this proposal is approved, that we will provide all equipment, furnish the materials, except as may otherwise be noted above, and perform all services necessary for the work above specified, and will accept as full payment therefor the prices shown above.

NOTE: If you, the contractor, do not sign acceptance of this order, your attention is directed to the requirements of the specifications as to proceeding with the ordered work and filing a written protest within the time therein specified.

Contractor Acceptance by		
Signature Michael D. Flowers	(Print name and title) Michael D. Flowers, Project Director	Date 05/23/06

STATE OF CALIFORNIA - DEPARTMENT OF TRANSPORTATION

CONTRACT CHANGE ORDER MEMORANDUM

DATE: 4/24/2006 Page 1 of 1

TO: PETER SIEGENTHALER / Gary Pursell	FILE: **E.A.** 04 - 0120F4
FROM: Gary Pursell	**CO-RTE-PM** SF-80-13.2/13.9
	FED. NO.
CCO#: **3** SUPPLEMENT#: **0** Category Code: **AUZZ**	CONTINGENCY BALANCE (incl. this change) **$148,652,590.00**
COST: **$200,000.00** INCREASE ☑ DECREASE ☐	HEADQUARTERS APPROVAL REQUIRED? ☐ YES ☑ NO
SUPPLEMENTAL FUNDS PROVIDED: **$200,000.00**	IS THIS REQUEST IN ACCORDANCE WITH ENVIRONMENTAL DOCUMENTS? ☑ YES ☐ NO
CCO DESCRIPTION: Partnering	**PROJECT DESCRIPTION:** CONSTRUCT SELF-ANCHORED SUSPENSION BRIDGE

LOCATION: IN SAN FRANCISCO COUNTY IN SAN FRANCISCO FROM 0.6 KM TO 1.3 KM EAST OF THE YERBA BUENA TUNNEL EAST PORTAL

THIS CHANGE ORDER PROVIDES FOR:

Reimbursing the Contractor for the State's share of the costs involved in 1) "Training in Partnering Concepts" and 2) initial partnering workshop and additional progress sessions throughout the life of the contract in accordance with Section 5-1.11, Partnering, of the Contract Special Provisions.

The Contractor has requested the formation of a "Partnering" relationship on the project. The Department concurs with establishing a "Partnering" relationship, and has approved the request.

The costs involved in providing the "Training in Partnering Concepts", including the trainer and training site will be borne entirely by the State. The costs involved with the initial partnering workshop and progress session will be borne equally by the State and the Contractor. Markups will not be added to payments.

This work will be performed as Extra Work at Force Account at an estimated cost of $200,000, which will be financed from the supplemental funds provided for this contract. Supplemental funds have been provided in the amount of $200,000.

No adjustment of contract time is warranted by this change.

Design and Maintenance concurrence is not required as this work is anticipated by the contract document

The Resident Engineer recommends this change order be approved.

CONCURRED BY:

Construction Engineer: Gary Pursell	GP	Date 5/26/06
Bridge Engineer:		Date
FHWA Representative:		Date
Project Engineer:		Date
Other (specify):		Date
		Date
		Date
District Prior Approval By:		Date
HQ (Issue Approve) By:		Date
Resident Engineer's Signature:	Gary Pursell	Date 5/25/06

ESTIMATE OF COST

	THIS REQUEST	TOTAL TO DATE
ITEMS	$0.00	$0.00
FORCE ACCOUNT	$200,000.00	$200,000.00
AGREED PRICE	$0.00	$0.00
ADJUSTMENT	$0.00	$0.00
TOTAL	$200,000.00	$200,000.00

FEDERAL PARTICIPATION

☐ PARTICIPATING ☐ PARTICIPATING IN PART ☑ NONE
☐ NON-PARTICIPATING (MAINTENANCE) ☐ NON-PARTICIPATING

FEDERAL SEGREGATION (if more than one Funding Source or P.I.P. type)
☐ CCO FUNDED PER CONTRACT ☐ CCO FUNDED AS FOLLOWS

FEDERAL FUNDING SOURCE	PERCENT

49,003

STATE OF CALIFORNIA - DEPARTMENT OF TRANSPORTATION

CONTRACT CHANGE ORDER

Change Requested by: Engineer

CCO: 4	Suppl. No. 0	Contract No. 04 - 0120F4	Road SF-80-13.2/13.9	FED. AID LOC.:

To: **AMERICAN BRIDGE/FLUOR ENTERPRISES INC A JOINT VENT**

You are directed to make the following changes from the plans and specifications or do the following described work not included in the plans and specifications for this contract. ***NOTE: This change order is not effective until approved by the Engineer.***

Description of work to be done, estimate of quantities and prices to be paid. (Segregate between additional work at contract price, agreed price and force account.) Unless otherwise stated, rates for rental of equipment cover only such time as equipment is actually used and no allowance will be made for idle time. This last percentage shown is the net accumulated increase or decrease from the original quantity in the Engineer's Estimate.

Extra Work at Force Account:

1. Revise Section 5-1.12, "DISPUTES REVIEW BOARD", subsection "COMPENSATION" of the Special Provisions with the paragraph shown on Sheet 2 of this change order.

2. Revise Section 5-1.12, "DISPUTES REVIEW BOARD", of the Special Provisions to include the informal dispute process as shown on Sheet 3 of this change order.

3. Revise Section 5-1.12, "DISPUTES REVIEW BOARD", subsection "DISPUTE REVIEW BOARD AGREEMENT", of the Special Provisions with the Agreement shown on Sheets 4 through 11 of this change order.

In accordance with Section 5-1.12, "Disputes Review Board" of the Special Provisions, incorporate the use of a Disputes Review Board. The utilization of the Disputes Review Board will be performed in accordance with the specifications and guidelines as described in the Special Provisions and in accordance with the Disputes Review Board Agreement revised in this change order.

The Disputes Review Board Agreement, Form CEM-6202 (modified) shall be completed by the Contractor, the State and the DRB members. The State and the Contractor shall bear the costs and expenses of the DRB equally as provided in the Disputes Review Board Agreement.

Reimbursement to the Contractor for payment of the States' share in the costs of the Disputes Review Board, shall be paid in accordance with Section 5-1.24, "Force Account Payment" of the Special Provisions, except there shall be no markups applied to expenses connected with the DRB, and no markups will be added to the Contractor's payment.

Estimated cost of Extra Work at Force Account $300,000.00

Estimated Cost: Increase ☑ Decrease ☐ $300,000.00

By reason of this order the time of completion will be adjusted as follows: 0 days

Submitted by

Signature	Resident Engineer	Date
Gary Pursell	Gary Pursell, P.E., Sup.T.E.	4/25/07

Approval Recommended by

Signature	Supervising Transportation Engineer	Date
Gary Pursell	Gary Pursell, P.E., Sup. TE	4/25/07

Engineer Approval by

Signature	Supervising Transportation Engineer	Date
P E Siegenthaler	Peter Siegenthaler, P.E., Prin. BE	4/30/07

We the undersigned contractor, have given careful consideration to the change proposed and agree, if this proposal is approved, that we will provide all equipment, furnish the materials, except as may otherwise be noted above, and perform all services necessary for the work above specified, and will accept as full payment therefor the prices shown above.

NOTE: If you, the contractor, do not sign acceptance of this order, your attention is directed to the requirements of the specifications as to proceeding with the ordered work and filing a written protest within the time therein specified.

Contractor Acceptance by

Signature	(Print name and title)	Date
Michael R. Flowers	Michael R. Flowers Project Director	4.30.07

STATE OF CALIFORNIA
DEPARTMENT OF TRANSPORTATION

HC-5 (Rev. 5/93)

CONTRACT CHANGE ORDER NO. 4 SUPPL. NO. ---

ROAD 04-SF-80-13.2, 13.9 SHEET 2 OF 11 SHEETS

FEDERAL NO.(S) CONTRACT NO.: 04-0120F4

To **American Bridge / Fluor Enterprises Inc., A Joint Venture**,
Contractor

You are hereby directed to make herein described changes from the plans and specifications or do the following described work not included in the plans and specifications of the contract.

NOTE: This change order is not effective until approved by The Chief Engineer.

Description of work to be done, estimate of quantities, and prices to be paid. Segregated between additional work at contract price and force account. Unless otherwise stated, rates for rental equipment cover only such time as equipment is actually used and no allowance will be made for idle time.

CHANGE REQUESTED BY THE **ENGINEER**

The last percentage shown is the net accumulated increase or decrease from the original quantity in the Engineer's Estimate.

1. Section 5-1.12, "DISPUTES REVIEW BOARD", subsection "COMPENSATION" is revised to read:

COMPENSATION

The STATE and the CONTRACTOR shall bear the costs and expenses of the DRB equally. Each of the State and Contractor DRB appointees shall be compensated at the rate of $1800 per day of DRB meeting. The third DRB member shall be compensated at the rate of $2400 per day of DRB meeting. Beginning January 1, 2010 the State and Contractor DRB appointees shall be compensated at an agreed rate of $2000 per day of DRB meeting. The third DRB member shall be compensated at an agreed rate of $2600 per day of DRB meeting. The agreed rates shall be considered full compensation for on-site time, travel expenses, transportation, lodging, time for travel and incidentals for each day, or portion thereof, that the DRB member is at an authorized DRB meeting. Authorized DRB meetings may include visits to production facilities in other states or nations. No additional compensation will be made for time spent by DRB members in review and research activities outside the official DRB meetings unless that time has been specifically agreed to in advance by the STATE and CONTRACTOR. Time away from the project that has been specifically agreed to in advance by the parties will be compensated at an agreed rate of $180 per hour for each of the State and Contractor DRB appointees and $250 per hour for the third DRB member. Beginning January 1, 2010, time away from the project, which has been specifically agreed to in advance by the parties, will be compensated at an agreed rate of $200 per hour for each of the State and Contractor DRB appointees and $270 per hour for the third DRB member. The agreed hourly rates shall include all incidentals including expenses for telephone, fax, and computer services. Members serving on more than one DRB involving the State, regardless of the number of meetings per day, shall not be paid more than the all inclusive rate per day or rate per hour for an individual project. The STATE will provide, at no cost to the CONTRACTOR, administrative services such as conference facilities and secretarial services to the DRB.
These special provisions and the Dispute Review Board Agreement state the provisions for compensation and expenses of the DRB. The Contractor shall make direct payments to each DRB member for their participation in authorized meetings and approved hourly rate charges from invoices submitted by each DRB member. The State will reimburse the Contractor for the State's share of the costs. There will be no markups applied to expenses connected with the DRB, either by the DRB members or by the Contractor when requesting payment of the State's share of DRB expenses. Regardless of the DRB recommendation, neither party shall be entitled to reimbursement of DRB costs from the other party.

2. Under Section 5-1.12, "DISPUTES REVIEW BOARD", insert the following "INFORMAL DISPUTE MEETING" section:

INFORMAL DISPUTE MEETING

An informal dispute meeting shall be convened, only if, the parties and the DRB agree that this dispute resolution process is appropriate to settle the dispute.
The following procedure shall be used for the informal dispute meeting:

a. The parties shall furnish the DRB with one copy of pertinent documents requested by the DRB that are or may become necessary for the DRB to perform its function. The party furnishing documents shall furnish such documents to the other party at the same time the document is provided to the DRB.
b. After the dispute meeting has concluded; the DRB members shall deliberate in private the same day, until a response to the parties is reached or as otherwise agreed to by the parties.
c. The DRB then verbally delivers its recommendation with findings, including minority opinion, if any, to the parties.
d. After the recommendation is presented, the parties may ask for clarifications.
e. Occasionally the DRB on complex issues may be unable to formulate a recommendation based on the information given at a dispute meeting. However, the DRB may provide the parties with advice on strengths and weaknesses of their prospective positions, in the hope of the parties reaching settlement.
f. If the parties are able to settle their dispute with the aid of the DRB's opinion, the STATE and CONTRACTOR shall promptly accept and implement the settlement of the parties.
g. The DRB will not be bound by its oral recommendation in the event that a dispute is later heard by the DRB in a traditional dispute meeting.

Unless the dispute is settled, use of the informal dispute meeting does not relieve the parties of their responsibilities under Section 5-1.12, "Dispute Review Board," of the Special Provisions or Subsection II.D, "DRB CONSIDERATION AND HANDLING OF DISPUTES" of the Dispute Review Board Agreement. There will be no extension of time allowed for the process to permit the use of the informal dispute meeting, unless otherwise agreed to by the parties.

DISPUTE REVIEW BOARD AGREEMENT

SFOBB Self-Anchored Suspension (SAS) Structure
(Contract Identification)

Contract No. 04-0120F4

THIS DISPUTE REVIEW BOARD AGREEMENT, hereinafter called "AGREEMENT", made and entered into this _____ day of _____, 2007, between the State of California, acting through the California Department of Transportation and the Director of Transportation, hereinafter called the "STATE," _____ hereinafter called the "CONTRACTOR," and the Dispute Review Board, hereinafter called the "DRB" consisting of the following members:

_____,
(Contractor Appointee)

_____,
(State Appointee)

and _____
(Third Person)

WITNESSETH, that

WHEREAS, the STATE and the CONTRACTOR, hereinafter called the "parties," are now engaged in the construction of the State Highway project referenced above; and

WHEREAS, the special provisions for the above referenced contract provides for the establishment and operation of the DRB to assist in resolving disputes; and

WHEREAS, the DRB is composed of three members, one selected by the STATE, one selected by the CONTRACTOR, and the third member selected by the other two members and approved by the parties;

NOW THEREFORE, in consideration of the terms, conditions, covenants, and performance contained herein, or attached and incorporated and made a part hereof, the STATE, the CONTRACTOR, and the DRB members hereto agree as follows:

SECTION I DESCRIPTION OF WORK

To assist in the resolution of disputes between the parties, the contract provides for the establishment and the operation of the DRB. The intent of the DRB is to fairly and impartially consider disputes placed before it and provide written recommendations for resolution of these disputes to both parties. The members of this DRB shall perform the services necessary to participate in the DRB's actions as designated in Section II, Scope of Work.

SECTION II SCOPE OF WORK

The scope of work of the DRB includes, but is not limited to, the following:

A. OBJECTIVE

The principal objective of the DRB is to assist in the timely resolution of disputes between the parties arising from performance of this contract. It is not intended for either party to default on their normal

responsibility to amicably and fairly settle their differences by indiscriminately assigning them to the DRB. It is intended that the mere existence of the DRB will encourage the parties to resolve disputes without resorting to this review procedure. But when a dispute that is serious enough to warrant the DRB's review does develop, the process for prompt and efficient action will be in place.

B. PROCEDURES

The DRB shall render written reports on disputes between the parties arising from the construction contract. Prior to consideration of a dispute, the DRB shall, with the input and concurrence of the parties, establish written operating procedures and guidelines that will govern the conduct of its business and reporting procedures in conformance with the requirements of the contract and the terms of this AGREEMENT. DRB recommendations, resulting from its consideration of a dispute, shall be furnished in writing to both parties. The recommendations shall be based on facts and circumstances involved in the dispute, pertinent contract provisions and applicable laws and regulations. The DRB shall make recommendations on the merit of the dispute, and if appropriate, recommend guidelines for determining compensation. If the parties cannot agree on compensation within 60 days of the acceptance by both parties of the DRB's recommendation, either party may request the DRB to make a recommendation regarding compensation.

The DRB shall refrain from giving advice or consulting services to anyone involved in the contract. The individual members shall act in a completely independent manner and while serving as members of the DRB shall have no consulting business connections with either party or its principals or attorneys or other affiliates (subcontractors, suppliers, etc.) who have a beneficial interest in the contract.

During scheduled meetings of the DRB as well as during dispute meetings, DRB members shall refrain from expressing opinions on the merits of statements on matters under dispute or potential dispute. Opinions of DRB members expressed in private sessions shall be kept strictly confidential. Individual DRB members shall not meet with, or discuss contract issues with individual parties. Other discussions regarding the project between the DRB members and the parties shall be in the presence of all three members and both parties. Individual DRB members shall not undertake independent investigations of any kind pertaining to disputes or potential disputes, except with the knowledge of both parties and as expressly directed by the DRB Chairperson

C. CONSTRUCTION SITE VISITS, PROGRESS MEETINGS AND FIELD INSPECTIONS

The DRB members shall visit the project site and meet with representatives of the parties to keep abreast of construction activities and to develop familiarity with the work in progress. Scheduled progress meetings shall be held at or near the project site. The DRB shall meet at least once at the start of the project, and at least once every 4 months thereafter. The frequency, exact time, and duration of additional site visits and progress meetings shall be as recommended by the DRB and approved by the parties consistent with the construction activities or matters under consideration and dispute. Each meeting shall consist of a round table discussion and a field inspection of the work being performed on the contract, if necessary. Each meeting shall be attended by representatives of both parties. The agenda shall generally be as follows:

1. Meeting opened by the DRB Chairperson.
2. Remarks by the STATE's representative.
3. A description by the CONTRACTOR's representative of work accomplished since the last meeting; the current schedule status of the work; and a forecast for the coming period.
4. An outline by the CONTRACTOR's representative of potential problems and a description of proposed solutions.
5. An outline by the STATE's representative of the status of the work as the STATE views it.
6. A brief description by the CONTRACTOR's or STATE's representative of potential claims or disputes which have surfaced since the last meeting.

7. A summary by the STATE's representative, the CONTRACTOR's representative, or the DRB of the status of past disputes and potential claims.

The STATE's representative will prepare minutes of all progress meetings and circulate them for revision and approval by all concerned within 10 days of the meeting.
The field inspection shall cover all active segments of the work, the DRB being accompanied by both parties' representatives. The field inspection may be waived upon mutual agreement of the parties.

D. DRB CONSIDERATION AND HANDLING OF DISPUTES

Upon receipt by the DRB of a written referral of a dispute, the DRB shall convene to review and consider the dispute. The dispute meeting shall be held no earlier than 30 days and no later than 60 days after receipt of the written referral, unless otherwise agreed to by all parties. The DRB shall determine the time and location of DRB dispute meetings, with due consideration for the needs and preferences of the parties while recognizing the paramount importance of speedy resolution of issues. No dispute meetings shall take place later than 30 days prior to acceptance of contract.
Normally, dispute meetings shall be conducted at or near the project site. However, any location that would be more convenient and still provide required facilities and access to necessary documentation shall be satisfactory.
Both parties shall be given the opportunity to present their evidence at these dispute meetings. It is expressly understood that the DRB members are to act impartially and independently in the consideration of the contract provisions, applicable laws and regulations, and the facts and conditions surrounding any dispute presented by either party, and that the recommendations concerning any such dispute are advisory and nonbinding on the parties.
The DRB may request that written documentation and arguments from both parties be sent to each DRB member, for review before the dispute meeting begins. A party furnishing written documentation to the DRB shall furnish copies of such information to the other party at the same time that such information is supplied to the DRB.
DRB dispute meetings shall be informal. There shall be no testimony under oath or cross-examination. There shall be no reporting of the procedures by a shorthand reporter or by electronic means. Documents and verbal statements shall be received by the DRB in conformance with acceptance standards established by the DRB. These standards need not comply with prescribed legal laws of evidence.
The third DRB member shall act as Chairperson for dispute meetings and all other DRB activities. The parties shall have a representative at all dispute meetings. Failure to attend a duly noticed dispute meeting by either of the parties shall be conclusively considered by the DRB as indication that the non-attending party considers written submittals as their entire and complete argument. The claimant shall discuss the dispute, followed by the other party. Each party shall then be allowed one or more rebuttals until all aspects of the dispute are thoroughly covered. DRB members shall ask questions, seek clarification, and request further data from either of the parties as may be necessary to assist in making a fully informed recommendation. The DRB may request from either party documents or information that would assist the DRB in making its findings and recommendations including, but not limited to, documents used by the CONTRACTOR in preparing the bid for the project. . In large or complex cases, additional dispute meetings may be necessary in order to consider all the evidence presented by both parties. All involved parties shall maintain the confidentiality of all documents and information, as provided in this AGREEMENT.
During dispute meetings, no DRB member shall express an opinion concerning the merit of any facet of the case. DRB deliberations shall be conducted in private, with interim individual views kept strictly confidential.
After dispute meetings are concluded, the DRB shall meet in private and reach a conclusion supported by 2 or more members. Private sessions of the DRB may be held at a location other than the job site or by electronic conferencing as deemed appropriate, in order to expedite the process.

The DRB's findings and recommendations, along with discussion of reasons therefor, shall then be submitted as a written report to both parties. Recommendations shall be based on the pertinent contract provisions, applicable laws and regulations, and facts and circumstances related to the dispute. The report shall be thorough in discussing the facts considered, the contract language, law or regulation viewed by the DRB as pertinent to the issues, and the DRB's interpretation and reasoning in arriving at its conclusions and recommendations. The DRB's report shall stand on its own, without attachments or appendices. The DRB Chairperson shall furnish a copy of the written recommendation report to the DRB Coordinator, Division of Construction, MS 44, P.O. Box 942874, Sacramento, CA 94274.
With prior written approval of both parties, the DRB may obtain technical services necessary to adequately review the disputes presented, including audit, geotechnical, schedule analysis and other services. The parties' technical staff may supply those services as appropriate. The cost of technical services, as agreed to by the parties, shall be borne equally by the 2 parties as specified in an approved contract change order. The CONTRACTOR will not be entitled to markups for the payments made for these services.
The DRB shall make every effort to reach a unanimous decision. If this proves impossible, the dissenting member shall prepare a minority opinion, which shall be included in the DRB's report. Although both parties should place weight upon the DRB's recommendations, they are not binding. Either party may request clarification or reconsideration. Reconsideration will be permitted only when there is new evidence to present, and the DRB shall accept only one such request from each party pertaining to an individual DRB recommendation. The DRB shall hear requests for clarification and reconsideration in conformance with the terms described in the Section entitled "Dispute Review Board" in the special provisions.

E. DRB MEMBER REPLACEMENT

Should the need arise to appoint a replacement DRB member, the replacement DRB member shall be appointed in the same manner as the original DRB members were appointed. The selection of a replacement DRB member shall begin promptly upon notification of the necessity for a replacement and shall be completed within 15 days. This AGREEMENT shall be amended to indicate change in DRB membership.

F. INFORMAL DISPUTE MEETING

An informal dispute meeting shall be convened, only if, the parties and the DRB agree that this dispute resolution process is appropriate to settle the dispute.
The following procedure shall be used for the informal dispute meeting:

a. The parties shall furnish the DRB with one copy of pertinent documents requested by the DRB that are or may become necessary for the DRB to perform its function. The party furnishing documents shall furnish such documents to the other party at the same time the document is provided to the DRB.
b. After the dispute meeting has concluded; the DRB members shall deliberate in private the same day, until a response to the parties is reached or as otherwise agreed to by the parties.
c. The DRB then verbally delivers its recommendation with findings, including minority opinion, if any, to the parties.
d. After the recommendation is presented, the parties may ask for clarifications.
e. Occasionally the DRB on complex issues may be unable to formulate a recommendation based on the information given at a dispute meeting. However, the DRB may provide the parties with advice on strengths and weaknesses of their prospective positions, in the hope of the parties reaching settlement.
f. If the parties are able to settle their dispute with the aid of the DRB's opinion, the STATE and CONTRACTOR shall promptly accept and implement the settlement of the parties.

g. The DRB will not be bound by its oral recommendation in the event that a dispute is later heard by the DRB in a traditional dispute meeting.

Unless the dispute is settled, use of the informal dispute meeting does not relieve the parties of their responsibilities under Section 5-1.12, "Dispute Review Board," of the Special Provisions or Subsection II.D, "DRB CONSIDERATION AND HANDLING OF DISPUTES" of this AGREEMENT. There will be no extension of time allowed for the process to permit the use of the informal dispute meeting, unless otherwise agreed to by the parties.

SECTION III CONTRACTOR RESPONSIBILITIES

The CONTRACTOR shall furnish to each DRB member one copy of pertinent documents that are or may become necessary for the DRB to perform their function. Pertinent documents are written notices of potential claim, responses to those notices, drawings or sketches, calculations, procedures, schedules, estimates, or other documents which are used in the performance of the work or in justifying or substantiating the CONTRACTOR's position. The CONTRACTOR shall also furnish a copy of such pertinent documents to the STATE, in conformance with the terms outlined in the special provisions.

SECTION IV STATE RESPONSIBILITIES

The STATE will furnish the following services and items:

A. CONTRACT RELATED DOCUMENTS

The STATE will furnish to each DRB member one copy of Notice to Contractors and Special Provisions, Proposal and Contract, Plans, Standard Specifications, and Standard Plans, change orders, written instructions issued by the STATE to the CONTRACTOR, or other documents pertinent to any dispute that has been referred to the DRB and necessary for the DRB to perform its function.

B. COORDINATION AND SERVICES

The STATE, through the Engineer, will, in cooperation with the CONTRACTOR, coordinate the operations of the DRB. The Engineer will arrange or provide conference facilities at or near the project site and provide secretarial and copying services to the DRB without charge to the CONTRACTOR.

SECTION V TIME FOR BEGINNING AND COMPLETION

Once established, the DRB shall be in operation until the day of acceptance of the contract. The DRB members shall not begin work under the terms of this AGREEMENT until authorized in writing by the STATE.

SECTION VI PAYMENT

A. ALL INCLUSIVE RATE PAYMENT

The STATE and the CONTRACTOR shall bear the costs and expenses of the DRB equally. Each of the State and Contractor DRB appointees shall be compensated at the rate of $1800 per day of DRB meeting. The third DRB member shall be compensated at the rate of $2400 per day of DRB meeting. Beginning January 1, 2010 the State and Contractor DRB appointees shall be compensated at an agreed rate of $2000 per day of DRB meeting. The third DRB member shall be compensated at an agreed rate of $2600 per day of DRB meeting. The agreed rates shall be considered full compensation for on-site time, travel expenses, transportation, lodging, time for travel and incidentals for each day, or portion thereof, that the DRB member is at an authorized DRB meeting. Authorized DRB meetings may include visits to production facilities in other states or nations. No additional compensation will be made for time spent by DRB members in review and research activities outside the official DRB meetings unless that time has

been specifically agreed to in advance by the STATE and CONTRACTOR. Time away from the project that has been specifically agreed to in advance by the parties will be compensated at an agreed rate of $180 per hour for each of the State and Contractor DRB appointees and $250 per hour for the third DRB member. Beginning January 1, 2010, time away from the project, which has been specifically agreed to in advance by the parties, will be compensated at an agreed rate of $200 per hour for each of the State and Contractor DRB appointees and $270 per hour for the third DRB member. The agreed hourly rates shall include all incidentals including expenses for telephone, fax, and computer services. Members serving on more than one DRB involving the State, regardless of the number of meetings per day, shall not be paid more than the all inclusive rate per day or rate per hour for an individual project. The STATE will provide, at no cost to the CONTRACTOR, administrative services such as conference facilities and secretarial services to the DRB.

B. PAYMENTS

The CONTRACTOR shall make direct payments to each DRB member for their participation in authorized meetings and approved hourly rate charges from invoices submitted by each DRB member. The STATE will reimburse the CONTRACTOR for its share of the costs of the DRB.

The DRB members may submit invoices to the CONTRACTOR for partial payment for work performed and services rendered for their participation in authorized meetings not more often than once per month during the progress of the work. The invoices shall be in a format approved by the parties and accompanied by a general description of activities performed during that billing period. Payment for hourly fees, at the agreed rate, shall not be paid to a DRB member until the amount and extent of those fees are approved by the STATE and CONTRACTOR.

Invoices shall be accompanied by original supporting documents, which the CONTRACTOR shall include with the extra work billing when submitting for reimbursement of the STATE's share of cost from the STATE. The CONTRACTOR will be reimbursed for one-half of approved costs of the DRB. No markups will be added to the CONTRACTOR's payment.

C. INSPECTION OF COSTS RECORDS

The DRB members and the CONTRACTOR shall keep available for inspection by representatives of the STATE and the United States, for a period of 3 years after final payment, the cost records and accounts pertaining to this AGREEMENT. If any litigation, claim, or audit arising out of, in connection with, or related to this contract is initiated before the expiration of the 3-year period, the cost records and accounts shall be retained until such litigation, claim, or audit involving the records is completed.

SECTION VII ASSIGNMENT OF TASKS OF WORK

The DRB members shall not assign the work of this AGREEMENT.

SECTION VIII TERMINATION OF DRB MEMBERS

DRB members may resign from the DRB by providing not less than 15 days written notice of the resignation to the STATE and CONTRACTOR. DRB members may be terminated by their original appointing power or by either party, for failing to fully comply at all times with all required disclosure conditions of DRB membership in conformance with the terms of the contract.

SECTION IX LEGAL RELATIONS

The parties hereto mutually understand and agree that a DRB member in the performance of duties on the DRB, is acting in the capacity of an independent agent and not as an employee of either party.

No party to this AGREEMENT shall bear a greater responsibility for damages or personal injury than is normally provided by Federal or State of California Law.

Notwithstanding the provisions of the contract that require the CONTRACTOR to indemnify and hold harmless the STATE, the parties shall jointly indemnify and hold harmless the DRB members from and

against all claims, damages, losses, and expenses, including but not limited to attorney's fees, arising out of and resulting from the findings and recommendations of the DRB.

SECTION X CONFIDENTIALITY

The parties hereto mutually understand and agree that all documents and records provided by the parties in reference to issues brought before the DRB, which documents and records are marked "Confidential - for use by the DRB only," shall be kept in confidence and used only for the purpose of resolution of subject disputes, and for assisting in development of DRB findings and recommendations; that such documents and records will not be utilized or revealed to others, except to officials of the parties who are authorized to act on the subject disputes, for any purposes, during the life of the DRB. Upon termination of this AGREEMENT, said confidential documents and records, and all copies thereof, shall be returned to the parties who furnished them to the DRB. However, the parties understand that such documents shall be subsequently discoverable and admissible in court or arbitration proceedings unless a protective order has been obtained by the party seeking further confidentiality.

SECTION XI DISPUTES

Disputes between the parties arising out of the work or other terms of this AGREEMENT, which cannot be resolved by negotiation and mutual concurrence between the parties, or through the administrative process provided in the contract, shall be resolved by arbitration as provided in Section 9-1.10, "Arbitration," of the Standard Specifications. Disputes between the DRB and either party, which cannot be resolved by negotiation and mutual concurrence, shall be resolved in the appropriate forum.

SECTION XII VENUE, APPLICABLE LAW, AND PERSONAL JURISDICTION

In the event that any party, including an individual member of the DRB, deems it necessary to institute arbitration proceedings to enforce any right or obligation under this AGREEMENT, the parties hereto agree that such action shall be initiated in the Office of Administrative Hearings of the State of California. The parties hereto agree that all questions shall be resolved by arbitration by application of California law and that the parties to such arbitration shall have the right of appeal from such decisions to the Superior Court in conformance with the laws of the State of California. Venue for the arbitration shall be Sacramento or any other location as agreed to by the parties.

SECTION XIII FEDERAL REVIEW AND REQUIREMENTS

On Federal-Aid contracts, the Federal Highway Administration shall have the right to review the work of the DRB in progress, except for private meetings or deliberations of the DRB.
Other Federal requirements in this agreement shall only apply to Federal-Aid contracts.

SECTION XIV CERTIFICATION OF THE CONTRACTOR, THE DRB MEMBERS, AND THE STATE

IN WITNESS WHEREOF, the parties hereto have executed this AGREEMENT as of the day and year first above written.

DRB MEMBER

By: _____

Title: _____

DRB MEMBER

By: _____

Title: _____

DRB MEMBER

By: _____

Title: _____

CONTRACTOR

By: _____

Title: _____

CALIFORNIA STATE DEPARTMENT OF TRANSPORTATION

By: _____

Title: _____

STATE OF CALIFORNIA - DEPARTMENT OF TRANSPORTATION

CONTRACT CHANGE ORDER MEMORANDUM

DATE: 4/30/2007

TO: Pete Siegenthaler, Prin. TE / Gary Pursell, P.E., Sup T.E.	FILE: E.A. 04 - 0120F4
FROM: Gary Pursell, P.E., Sup.T.E.	CO-RTE-PM SF-80-13.2/13.9
	FED. NO.
CCO#: 4 SUPPLEMENT#: 0 Category Code: CXSA	CONTINGENCY BALANCE (incl. this change) $144,855,532.34
COST: $300,000.00 INCREASE ☑ DECREASE ☐	HEADQUARTERS APPROVAL REQUIRED? ☑ YES ☐ NO
SUPPLEMENTAL FUNDS PROVIDED: $300,000.00	IS THIS REQUEST IN ACCORDANCE WITH ENVIRONMENTAL DOCUMENTS? ☑ YES ☐ NO
CCO DESCRIPTION: Disputes Review Board	**PROJECT DESCRIPTION:** CONSTRUCT SELF-ANCHORED SUSPENSION BRIDGE

Original Contract Time:	Time Adj. This Change:	Previously Approved CCO Time Adjustments:	Percentage Time Adjusted: (including this change)	Total # of Unreconciled Deferred Time CCO(s): (including this change)
2490 Day(s)	0 Day(s)	30 Day(s)	1 %	0

THIS CHANGE ORDER PROVIDES FOR:

Establishing a Disputes Review Board in accordance with the terms of the Disputes Review Board Specifications, Agreement, and Certifications in Section 5-1.12, "Disputes Review Board" of the Special Provisions and the Disputes Review Board Agreement. The purpose of the Board is to assist in the resolution of disputes and potential claims arising from the work.

This Section of the Special Provisions, as well as the Disputes Review Board Agreement have been modified to provide higher compensation rates to the DRB members due to the uniqueness and complexity of this project. This change shall attract higher caliber DRB members to assist in the resolution of project issues. The agreement has also be modified to include the informal DRB process, as described in Construction Policy Bulletin (CPB) 06-2, issued by the Division of Construction.

The cost of providing a Disputes Review Board for this contract shall be borne equally by the Contractor and the State. For the purposes of enabling partial payments to the Contractor on a monthly basis, the method of payment shall be Extra Work at Force Account. Payments shall be made on a lump sum basis from invoices submitted by the Board, not more than once per month. Markups will not be allowed in the payment of the State's share of the invoiced costs. The total estimated cost of this change is $300,000.00. Funding for this change can be done through the supplemental funds within the contingency fund.

There is no time adjustment to this change order, as it does not affect the controlling operation.

Design and Maintenance concurrence is not required as this work is anticipated by the contract documents.

A Division of Construction "Issue and Approve" was obtained on 4/23/2007 for this change order. A copy is attached for your reference.

CONCURRED BY:

Construction Engineer:	Res. Eng., Gary Pursell, Sup. TE	Date	3/20/07
Bridge Engineer:	Struct Rep, Rick Morrow, Sup TE	Date	3/21/07
Project Engineer:		Date	
Project Manager:	Proj Manager, Ken Terpstra	Date	3/29/07
FHWA Rep.:		Date	
Environmental:	HQ, Rob Kobal	Date	3/21/07
Other (specify):	HQ Spec, Henry Wells	Date	2/28/07
Other (specify):	PCE, Pete Siegenthaler, Prin TE	Date	3/26/07
District Prior Approval By:		Date	
HQ (Issue Approve) By:	HQ, Ken Darby	Date	4/23/07
Resident Engineer's Signature:		Date	

Gary Pursell 4/30/07

ESTIMATE OF COST

	THIS REQUEST	TOTAL TO DATE
ITEMS	$0.00	$0.00
FORCE ACCOUNT	$300,000.00	$300,000.00
AGREED PRICE	$0.00	$0.00
ADJUSTMENT	$0.00	$0.00
TOTAL	$300,000.00	$300,000.00

FEDERAL PARTICIPATION

☐ PARTICIPATING ☐ PARTICIPATING IN PART ☑ NONE
☐ NON-PARTICIPATING (MAINTENANCE) ☐ NON-PARTICIPATING

FEDERAL SEGREGATION (if more than one Funding Source or P.I.P. type)
☑ CCO FUNDED PER CONTRACT ☐ CCO FUNDED AS FOLLOWS

FEDERAL FUNDING SOURCE	PERCENT

ADA Notice: For individuals with sensory disabilities, this document is available in alternate formats. For information call: (916) 654-6410 or TDD (916) 654-3880 or write Records and Forms Management, 1120 N Street, MS-89, Sacramento, CA 95814.

STATE OF CALIFORNIA - DEPARTMENT OF TRANSPORTATION

CONTRACT CHANGE ORDER

Change Requested by: Engineer

CCO: 004 Suppl. No. 1 Contract No. 04 – 0120F4 Road SF-80-13.2/13.9 **FED. AID LOC.:**

To: **AMERICAN BRIDGE/FLUOR ENTERPRISES INC A JOINT VENTURE**

You are directed to make the following changes from the plans and specifications or do the following described work not included in the plans and specifications for this contract. ***NOTE: This change order is not effective until approved by the Engineer.***

Description of work to be done, estimate of quantities and prices to be paid. (Segregate between additional work at contract price, agreed price and force account.) Unless otherwise stated, rates for rental of equipment cover only such time as equipment is actually used and no allowance will be made for idle time. This last percentage shown is the net accumulated increase or decrease from the original quantity in the Engineer's Estimate.

Adjustment of Compensation at Lump Sum Price:

Revise Special Provisions Section 5-1.12, "DISPUTES REVIEW BOARD", subsection "COMPENSATION" as previously shown in CCO 4, S0, as follows:

COMPENSATION

The STATE and the CONTRACTOR shall bear the costs and expenses of the DRB equally. Each of the State and Contractor DRB appointees shall be compensated at the rate of $1800 per day of DRB meeting. The third DRB member shall be compensated at the rate of $2400 per day of DRB meeting. Beginning January 1, 2010 the State and Contractor DRB appointees shall be compensated at an agreed rate of $2000 per day of DRB meeting. The third DRB member shall be compensated at an agreed rate of $2600 per day of DRB meeting. The agreed rates shall be considered full compensation for on-site time, travel expenses, transportation, lodging, time for travel and incidentals for each day, or portion thereof, that the DRB member is at an authorized DRB meeting. Authorized DRB meetings may include visits to production facilities in other states or nations. Compensation for off-site travel expenses, transportation, lodging, and incidentals for visits to production facilities in other states or nations will be in addition to the above agreed rates, with compensation to be determined and agreed to by the parties. No additional compensation will be made for time spent by DRB members in review and research activities outside the official DRB meetings unless that time has been specifically agreed to in advance by the STATE and CONTRACTOR. Time away from the project that has been specifically agreed to in advance by the parties will be compensated at an agreed rate of $180 per hour for each of the State and Contractor DRB appointees and $250 per hour for the third DRB member. Beginning January 1, 2010, time away from the project, which has been specifically agreed to in advance by the parties, will be compensated at an agreed rate of $200 per hour for each of the State and Contractor DRB appointees and $270 per hour for the third DRB member. The agreed hourly rates shall include all incidentals including expenses for telephone, fax, and computer services. Members serving on more than one DRB involving the State, regardless of the number of meetings per day, shall not be paid more than the all inclusive rate per day or rate per hour for an individual project. The STATE will provide, at no cost to the CONTRACTOR, administrative services such as conference facilities and secretarial services to the DRB. These special provisions and the Dispute Review Board Agreement state the provisions for compensation and expenses of the DRB. The Contractor shall make direct payments to each DRB member for their participation in authorized meetings and approved hourly rate charges from invoices submitted by each DRB member. The State will reimburse the Contractor for the State's share of the costs. There will be no markups applied to expenses connected with the DRB, either by the DRB members or by the Contractor when requesting payment of the State's share of DRB expenses. Regardless of the DRB recommendation, neither party shall be entitled to reimbursement of DRB costs from the other party.

Cost of Adjustment of Compensation at Lump Sum Price $0.00

Estimated Cost: Increase Decrease ☐ $0.00

By reason of this order the time of completion will be adjusted as follows: None

Submitted by

Signature **Resident Engineer** Darryl Schram for Gary Pursell, Sup.T.E. **Date** 2/18/10

Approval Recommended by

Signature Gary Pursell **Supervising Transportation Engineer** Gary Pursell, Sup.T.E. **Date** 2/18/10

Engineer Approval by

Signature Gary Pursell **Supervising Transportation Engineer** Gary Pursell, Sup.T.E. **Date** 2/24/10

We the undersigned contractor, have given careful consideration to the change proposed and agree, if this proposal is approved, that we will provide all equipment, furnish the materials, except as otherwise be noted above, and perform all services necessary for the work above specified, and will accept as full payment therefor the prices shown above.

NOTE: If you, the contractor, do not sign acceptance of this order, your attention is directed to the requirements of the specifications as to proceeding with the ordered work and filing a written protest within the time therein specified.

Contractor Acceptance by

Signature (Print name and title) Michael D. Flowers Project Director **Date** 2-23-10

STATE OF CALIFORNIA - DEPARTMENT OF TRANSPORTATION

CONTRACT CHANGE ORDER MEMORANDUM

DC-CEM-4903 (OLD HC-39 REV. 6/93) CT# 7541-3544-0

DATE: 02/24/2010

TO Pete Siegenthaler, Principal TE	FILE 04-0120F4 04-SF-80-13.2/13.9
FROM Gary Pursell, STE / Richard Morrow, SBE	
CCO NO. 4 / SUPPLEMENT NO. 1 / CATEGORY CODE CXSA	CONTINGENCY BALANCE (including this change) **$8,014,909.40**
$0.00 INCREASE ☒ DECREASE ☐	HEADQUARTERS APPROVAL REQUIRED? YES ☒ NO ☐
SUPPLEMENTAL FUNDS PROVIDED $	IS THIS REQUEST IN ACCORDANCE WITH ENVIRONMENTAL DOCUMENTS? YES ☒ NO ☐
CCO DESCRIPTION: Disputes Review Board	**PROJECT DESCRIPTION** CONSTRUCT SELF-ANCHORED SUSPENSION BRIDGE

Original Contract Time	Time Adj.: This Change	Previously Approved CCO Time Adjustments	Percentage Time Adjusted: (including this change)	Total # of Unreconciled Deferred Time CCO(s): (including this change)
2490 Day(s)	**0** Day(s)	**227** Day(s)	**9** %	**6**

THIS CHANGE ORDER PROVIDES FOR:

Revise Special Provisions Section 5-1.12, "DISPUTES REVIEW BOARD", subsection "COMPENSATION" to address compensation for off-site travel expenses, transportation, lodging, and incidentals for visits to production facilities in other states or nations.

Special Provisions Section 5-1.12 does not address off-site travel compensation. The SAS project has numerous off-site production facilities, which may require the DRB to visit in the course of thoroughly evaluating disputes. Due to the uniqueness and complexity of the project the DRB, at the request of both the Contractor and the Department, may also be requested to visit off-site production facility in order to get a full understanding of the issues and challenges surrounding the project. The additional compensation for overseas travel will be determined and agreed to by the parties.

This is a no-cost change order. A detailed cost analysis is on file.

No adjustment of contract time is warranted, as this change does not affect the controlling operation.

This change order received concurrences from Gary Pursell (Resident Engineer), Rick Morrow (Structure Rep.), Pete Siegenthaler (Principal Engineer), Rich Foley (HQ Liaison) and Ken Terpstra (Project Manager). Design and Maintenance concurrences are not required for this change.

This Resident Engineer received an Issue and Approve (I&A) from Headquarter Construction for this change on 2/18/2010.

CONCURRED BY:

	DATE
CONSTRUCTION ENGINEER Res. Eng. Gary Pursell, Sup. TE	1/5/10
SR. BRIDGE ENGINEER Rick Morrow, Struct. Rep.	1/5/10
FHWA REPRESENTATIVE	DATE
PROJECT MANAGER Proj. Manager, Ken Terpstra	1/7/10
OTHER (SPECIFY) HQ Liaison, Rich Foley	1/6/10
Project Engineer, Brian Maroney	1/4/10
HQ Coordinator, Jon Tapping	1/4/10
PCE, Peter Siegenthaler, Prin TE	1/7/10
DISTRICT PRIOR APPROVAL BY	DATE
HQ (ISSUE & APPROVE) (TO PROCEED) BY HQ Const. Larry Salhaney	2/18/10
RESIDENT ENGINEER SIGNATURE Gary Pursell	2/24/10

ESTIMATE OF COST

	THIS REQUEST	TOTAL TO DATE
ITEMS	$0.00	$0.00
FORCE ACCOUNT	$0.00	$300,000.00
AGREED PRICE	$0.00	$0.00
ADJUSTMENT	$0.00	$0.00
TOTAL	$0.00	$300,000.00

FEDERAL PARTICIPATION

☐ PARTICIPATING ☐ PARTICIPATING IN PART ☒ NONE
☐ NON-PARTICIPATING (MAINTENANCE) ☐ NON-PARTICIPATING

FEDERAL SEGREGATION (IF MORE THAN ONE FUNDING SOURCE OR P.I.P. TYPE)
☐ CCO FUNDED PER CONTRACT ☐ CCO FUNDED AS FOLLOWS

FEDERAL FUNDING SOURCE	PERCENT

HC-39 Word(Rev.9/96)

CONTRACT CHANGE ORDER

Change Requested by: Engineer

CCO: 5	Suppl. No. 0	Contract No. 04 - 0120F4	Road SF-80-13.2/13.9	FED. AID LOC.:

To: **AMERICAN BRIDGE/FLUOR ENTERPRISES INC A JOINT VENTURE**

You are directed to make the following changes from the plans and specifications or do the following described work not included in the plans and specifications for this contract. ***NOTE: This change order is not effective until approved by the Engineer.***

Description of work to be done, estimate of quantities and prices to be paid. (Segregate between additional work at contract price, agreed price and force account.) Unless otherwise stated, rates for rental of equipment cover only such time as equipment is actually used and no allowance will be made for idle time. This last percentage shown is the net accumulated increase or decrease from the original quantity in the Engineer's Estimate.

Extra Work at Force Account:

In accordance with Section 10-1.11, "PHOTO SURVEYS / PUBLIC RELATIONS" of the Special Provisions, provide, maintain and relocate time-lapse video and still photography to document pre-construction conditions, progress and completion of the work, as well as document public relation activities as authorized by the Engineer.

Pursuant to Section 10-1.31, "PHOTO SURVEY OF EXISTING FACILITIES" of the Special Provisions, provide the labor, equipment and material to perform photo surveys of existing facilities other than Building 262 as authorized by the Engineer.

Labor, equipment and material authorized by the Engineer, as necessary, will be paid in accordance with the provisions of Section 4-1.03D, "Extra Work" of the Standard Specifications and Section 5-1.24, "Force Account Payment" of the Special Provisions.

Estimated cost of Extra Work at Force Account $100,000.00

Estimated Cost: **Increase** ☑ **Decrease** ☐ **$100,000.00**

By reason of this order the time of completion will be adjusted as follows: 0 days

Submitted by

Signature	Resident Engineer: Gary Pursell	Date 8/31/06

Approval Recommended by

Signature	Construction Engineer: Gary Pursell	Date 8/31/06

Engineer Approval by

Signature	(Print name and title) Gary Pursell - Construction Engineer	Date 8/31/06

We the undersigned contractor, have given careful consideration to the change proposed and agree, if this proposal is approved, that we will provide all equipment, furnish the materials, except as may otherwise be noted above, and perform all services necessary for the work above specified, and will accept as full payment therefor the prices shown above.

NOTE: If you, the contractor, do not sign acceptance of this order, your attention is directed to the requirements of the specifications as to proceeding with the ordered work and filing a written protest within the time therein specified.

Contractor Acceptance by

Signature	(Print name and title) Michael D. Flowers Project Director	Date 8-31-06

STATE OF CALIFORNIA - DEPARTMENT OF TRANSPORTATION

CONTRACT CHANGE ORDER MEMORANDUM

TO: PETER SIEGENTHALER / Gary Pursell	FILE: **E.A.** 04 - 0120F4
FROM: Gary Pursell	**CO-RTE-PM** SF-80-13.2/13.9
	FED. NO.
CCO#: **5** SUPPLEMENT#: **0** Category Code: **CASA**	CONTINGENCY BALANCE (incl. this change) **$148,530,190.00**
COST: **$100,000.00** INCREASE ☑ DECREASE ☐	HEADQUARTERS APPROVAL REQUIRED? ☐ YES ☑ NO
SUPPLEMENTAL FUNDS PROVIDED: **$100,000.00**	IS THIS REQUEST IN ACCORDANCE WITH ENVIRONMENTAL DOCUMENTS? ☑ YES ☐ NO
CCO DESCRIPTION: Photography & Photo Surveys	**PROJECT DESCRIPTION:** CONSTRUCT SELF-ANCHORED SUSPENSION BRIDGE

LOCATION: IN SAN FRANCISCO COUNTY IN SAN FRANCISCO FROM 0.6 KM TO 1.3 KM EAST OF THE YERBA BUENA TUNNEL EAST PORTAL

THIS CHANGE ORDER PROVIDES FOR:

Providing time-lapse video and still photography to document pre-construction conditions, and progress and completion of the work, and facilitate public relation activities as well as photo surveys of existing buildings not covered by contract item work as authorized by the Engineer.

This change is needed to provide high-resolution still and time-lapsed historical documentation for the construction of the Self-Anchored Suspension Bridge. This change also includes additional photo surveys required around Pier 7 and Yerba Buena Island to monitor the existing conditions of the structures and develop documentation and reports during the life of the project to make sure no damage occurs during the contractor's operations.

This work was contemplated in Section 10-1.11, "PHOTO SURVEYS / PUBLIC RELATIONS", and Section 10-1.31, "PHOTO SURVEY OF EXISTING FACILITIES" of the Special Provisions.

This work is not covered by any contract items. Therefore, payment for this work will be at Extra Work at Force Account for an estimated cost of $100,000.00, which can be financed from the supplemental funds of which $107,600.00 were allotted for this work.

No time adjustment is warranted as this change order does not affect the controlling operation.

Design and Maintenance concurrence is not needed for this change order since this change is addressed in the supplemental funds and contract special provisions.

CONCURRED BY:

Construction Engineer:	Gary Pursell G.P.	Date8/31/2006
Bridge Engineer:		Date
FHWA Representative:		Date
Project Engineer:		Date
Other (specify):		Date
		Date
		Date
District Prior Approval By:	Gary Pursell	Date8/31/2006
HQ (Issue Approve) By:		Date
Resident Engineer's Signature:	Gary Pursell	Date 8/31/06

ESTIMATE OF COST

	THIS REQUEST	TOTAL TO DATE
ITEMS	$0.00	$0.00
FORCE ACCOUNT	$100,000.00	$100,000.00
AGREED PRICE	$0.00	$0.00
ADJUSTMENT	$0.00	$0.00
TOTAL	$100,000.00	$100,000.00

FEDERAL PARTICIPATION

☐ PARTICIPATING ☐ PARTICIPATING IN PART ☑ NONE
☐ NON-PARTICIPATING (MAINTENANCE) ☐ NON-PARTICIPATING

FEDERAL SEGREGATION (if more than one Funding Source or P.I.P. type)
☑ CCO FUNDED PER CONTRACT ☐ CCO FUNDED AS FOLLOWS

FEDERAL FUNDING SOURCE	PERCENT

STATE OF CALIFORNIA - DEPARTMENT OF TRANSPORTATION

CONTRACT CHANGE ORDER

Change Requested by: Engineer

CCO: 5 **Suppl. No. 2** **Contract No. 04 – 0120F4** **Road** SF-80-13.2/13.9 **FED. AID LOC.:**

To: **AMERICAN BRIDGE/FLUOR ENTERPRISES INC A JOINT VENTURE**

You are directed to make the following changes from the plans and specifications or do the following described work not included in the plans and specifications for this contract. ***NOTE: This change order is not effective until approved by the Engineer.***

Description of work to be done, estimate of quantities and prices to be paid. (Segregate between additional work at contract price, agreed price and force account.) Unless otherwise stated, rates for rental of equipment cover only such time as equipment is actually used and no allowance will be made for idle time. This last percentage shown is the net accumulated increase or decrease from the original quantity in the Engineer's Estimate.

Extra Work at Force Account:

Provide additional funds.

Labor, equipment and material authorized by the Engineer, as necessary, will be paid in accordance with the provisions of Section 4-1.03D, "Extra Work" of the Standard Specifications and Section 5-1.24, "Force Account Payment" of the Special Provisions.

Estimated Cost of Extra Work at Force Account.....$180,000.00

Estimated Cost: Increase ☒ Decrease ☐ $180,000.00

By reason of this order the time of completion will be adjusted as follows: 0 Days

Submitted by

Signature **Resident Engineer** Darryl Schram, Senior T.E. **Date** 8/31/12

Approval Recommended by

Signature **Supervising Transportation Engineer** William Casey, Sup. T.E. **Date** 8/31/12

Engineer Approval by

Signature **Supervising Transportation Engineer** William Casey, Sup. T.E. **Date** 9-7-12

We the undersigned contractor, have given careful consideration to the change proposed and agree, if this proposal is approved, that we will provide all equipment, furnish the materials, except as otherwise be noted above, and perform all services necessary for the work above specified, and will accept as full payment therefor the prices shown above.

NOTE: If you, the contractor, do not sign acceptance of this order, your attention is directed to the requirements of the specifications as to proceeding with the ordered work and filing a written protest within the time therein specified.

Contractor Acceptance by

Signature (Print name and title) BRIAN A. PETERSEN - PROJECT DIRECTOR **Date** 06SEP12

STATE OF CALIFORNIA - DEPARTMENT OF TRANSPORTATION

CONTRACT CHANGE ORDER MEMORANDUM

DATE: 8/31/2012 Page 1 of 1

TO: Tony Anziano, Program Manager /

FROM: Darryl Schram, Senior TE

FILE: **E.A.** 04 - 0120F4
CO-RTE-PM SF-80-13.2/13.9
FED. NO.

CCO#: **5** SUPPLEMENT#: **2** Category Code: **CHSA**

CONTINGENCY BALANCE (incl. this change) **$104,337,854.58**

COST: **$180,000.00** INCREASE ☑ DECREASE ☐

HEADQUARTERS APPROVAL REQUIRED? ☑ YES ☐ NO

SUPPLEMENTAL FUNDS PROVIDED: **$0.00**

IS THIS REQUEST IN ACCORDANCE WITH ENVIRONMENTAL DOCUMENTS? ☑ YES ☐ NO

CCO DESCRIPTION:
Photography - Additional Funds

PROJECT DESCRIPTION:
CONSTRUCT SELF-ANCHORED SUSPENSION BRIDGE

Original Contract Time:	Time Adj. This Change:	Previously Approved CCO Time Adjustments:	Percentage Time Adjusted: (including this change)	Total # of Unreconciled Deferred Time CCO(s): (including this change)
2490 Day(s)	**0** Day(s)	**501** Day(s)	**20** %	**3**

THIS CHANGE ORDER PROVIDES FOR:

Providing additional funds for photo documentation of significant construction activities, progress, and facilitate public relation activities not covered by contract item work as directed by the Engineer.

The additional funds are needed to fully fund original scope of work until project completion. The original scope of work is unchanged by this supplemental change order and consists of documenting various elements of the project including historical background, transportation impact, design considerations and reviews, engineering, fabrication, logistical and construction processes, with an emphasis on the visually dramatic components of the project.

This work will be paid as extra work at force account and the Department estimates it to total $180,000.00, which can be financed from the contingency fund. The cumulative total of CCO 5 S0, S1, and S2 is $980,000.00, which $107,600.00 is financed from supplemental funds and $872,400.00 is financed from the contingency fund.

No time adjustment is warranted as this change order does not affect the controlling operation.

This change order has concurrence from William Casey (Supervising TE) and Rich Foley (HQ Oversight).

CONCURRED BY:

Construction Engineer:	William Casey, Sup TE	Date 8/28/12
Bridge Engineer:		Date
Project Engineer:		Date
Project Manager:		Date
FHWA Rep.:		Date
Environmental:		Date
Other (specify):	HQ, Rich Foley	Date 8/29/12
Other (specify):		Date
District Prior Approval By:		Date
HQ (Issue Approve) By:		Date
Resident Engineer's Signature:		Date 8/31/12

ESTIMATE OF COST

	THIS REQUEST	TOTAL TO DATE
ITEMS	$0.00	$0.00
FORCE ACCOUNT	$180,000.00	$980,000.00
AGREED PRICE	$0.00	$0.00
ADJUSTMENT	$0.00	$0.00
TOTAL	$180,000.00	$980,000.00

FEDERAL PARTICIPATION

☐ PARTICIPATING ☐ PARTICIPATING IN PART ☑ NONE
☐ NON-PARTICIPATING (MAINTENANCE) ☐ NON-PARTICIPATING

FEDERAL SEGREGATION (if more than one Funding Source or P.I.P. type)
☐ CCO FUNDED PER CONTRACT ☐ CCO FUNDED AS FOLLOWS

FEDERAL FUNDING SOURCE PERCENT

ADA Notice: For individuals with sensory disabilities, this document is available in alternate formats. For information call: (916) 654-6410 or TDD (916) 654-3880 or write Records and Forms Management, 1120 N Street, MS-89, Sacramento, CA 95814.

CONTRACT CHANGE ORDER

Change Requested by: Engineer

CCO: 5	Suppl. No. 1	Contract No. 04 - 0120F4	Road SF-80-13.2/13.9	FED. AID LOC.:

To: **AMERICAN BRIDGE/FLUOR ENTERPRISES INC A JOINT VENT**

You are directed to make the following changes from the plans and specifications or do the following described work not included in the plans and specifications for this contract. ***NOTE: This change order is not effective until approved by the Engineer.***

Description of work to be done, estimate of quantities and prices to be paid. (Segregate between additional work at contract price, agreed price and force account.) Unless otherwise stated, rates for rental of equipment cover only such time as equipment is actually used and no allowance will be made for idle time. This last percentage shown is the net accumulated increase or decrease from the original quantity in the Engineer's Estimate.

Extra Work at Force Account:

Provide additional funds.

Estimated cost of Extra Work at Force Account $700,000.00

Estimated Cost: Increase ☑ **Decrease** ☐ **$700,000.00**

By reason of this order the time of completion will be adjusted as follows: 0 days

Submitted by

Signature	Resident Engineer Darryl Schram for Gary Pursell, P.E., Sup.T.E.	Date 6/27/08

Approval Recommended by

Signature	Supervising Bridge Engineer Richard Morrow, P.E., Sup. BE	Date 6/27/08

Engineer Approval by

Signature	Supervising Transportation Engineer Gary Pursell, P.E., Sup. TE	Date 7/1/08

We the undersigned contractor, have given careful consideration to the change proposed and agree, if this proposal is approved, that we will provide all equipment, furnish the materials, except as may otherwise be noted above, and perform all services necessary for the work above specified, and will accept as full payment therefor the prices shown above.

NOTE: If you, the contractor, do not sign acceptance of this order, your attention is directed to the requirements of the specifications as to proceeding with the ordered work and filing a written protest within the time therein specified.

Contractor Acceptance by

Signature NOT REQUIRED	(Print name and title)	Date

STATE OF CALIFORNIA - DEPARTMENT OF TRANSPORTATION

CONTRACT CHANGE ORDER MEMORANDUM

DATE: 7/1/2008 Page 1 of 1

TO: Mike Forner, Prin. TE / Gary Pursell, P.E., Sup T.E.	FILE: E.A. 04 - 0120F4
FROM: Gary Pursell, P.E., Sup.T.E.	CO-RTE-PM SF-80-13.2/13.9
	FED. NO.
CCO#: 5 SUPPLEMENT#: 1 Category Code: CHSA	CONTINGENCY BALANCE (incl. this change) $137,275,978.40
COST: $700,000.00 INCREASE ☑ DECREASE ☐	HEADQUARTERS APPROVAL REQUIRED? ☑ YES ☐ NO
SUPPLEMENTAL FUNDS PROVIDED: $7,600.00	IS THIS REQUEST IN ACCORDANCE WITH ENVIRONMENTAL DOCUMENTS? ☑ YES ☐ NO
CCO DESCRIPTION: Provide Additional Funds	**PROJECT DESCRIPTION:** CONSTRUCT SELF-ANCHORED SUSPENSION BRIDGE

Original Contract Time:	Time Adj. This Change:	Previously Approved CCO Time Adjustments:	Percentage Time Adjusted: (including this change)	Total # of Unreconciled Deferred Time CCO(s): (including this change)
2490 Day(s)	0 Day(s)	30 Day(s)	1 %	2

THIS CHANGE ORDER PROVIDES FOR:

Providing additional funds for photo documentation of significant construction activities, progress, and facilitate public relation activities not covered by contract item work as authorized by the Engineer.

The additional funds are needed to fully fund original scope of work until project completion. The original scope of work is unchanged by this supplemental change order and consist of documenting various elements of the project including, but not limited to, historical background, transportation impact, design considerations and reviews, engineering, fabrication, logistical and construction processes, with an emphasis on the visually dramatic components of the project.

Payment for this supplemental change will be as Extra Work at Force Account for an estimated cost of $700,000.00, which can be financed from the contingency funds. The total cumulative cost of this change order, including $100,000.00 for the original plus $700,000.00 for this supplemental, is estimated to be $800,000.00. Supplemental funds of $107,600.00 have been allotted for this work. An estimate is on file in the project records.

No time adjustment is warranted, as this change order does not affect the controlling operation.

Design and Maintenance concurrence is not needed for this change order since this change is addressed in the supplemental funds and contract special provisions.

This change order received approval from the Division of Construction on July 1, 2008. A copy is attached for your reference.

CONCURRED BY:			
Construction Engineer:	Res. Eng., Gary Pursell, Sup. TE	Date	6/26/08
Bridge Engineer:	Struct Rep, Rick Morrow, Sup TE	Date	6/24/08
Project Engineer:		Date	
Project Manager:	Proj Manager, Ken Terpstra	Date	6/18/08
FHWA Rep.:		Date	
Environmental:		Date	
Other (specify):	PCE, Michael Forner	Date	6/24/08
Other (specify):	HQ, Patrick Treacy	Date	6/24/08
District Prior Approval By:		Date	
HQ (Issue Approve) By:	HQ, Ken Darby	Date	7/1/08
Resident Engineer's Signature:	Gary Pursell	Date	7/1/08

ESTIMATE OF COST	THIS REQUEST	TOTAL TO DATE
ITEMS	$0.00	$0.00
FORCE ACCOUNT	$700,000.00	$800,000.00
AGREED PRICE	$0.00	$0.00
ADJUSTMENT	$0.00	$0.00
TOTAL	$700,000.00	$800,000.00

FEDERAL PARTICIPATION

☐ PARTICIPATING ☐ PARTICIPATING IN PART ☑ NONE

☐ NON-PARTICIPATING (MAINTENANCE) ☐ NON-PARTICIPATING

FEDERAL SEGREGATION (if more than one Funding Source or P.I.P. type)

☐ CCO FUNDED PER CONTRACT ☐ CCO FUNDED AS FOLLOWS

FEDERAL FUNDING SOURCE	PERCENT

ADA Notice: For individuals with sensory disabilities, this document is available in alternate formats. For information call: (916) 654-6410 or TDD (916) 654-3880 or write Records and Forms Management, 1120 N Street, MS-89, Sacramento, CA 95814.

STATE OF CALIFORNIA - DEPARTMENT OF TRANSPORTATION

CONTRACT CHANGE ORDER

Change Requested by: Engineer

CCO: 6	Suppl. No. 0	Contract No. 04 - 0120F4	Road SF-80-13.2/13.9	FED. AID LOC.:

To: **AMERICAN BRIDGE/FLUOR ENTERPRISES INC A JOINT VENT**

You are directed to make the following changes from the plans and specifications or do the following described work not included in the plans and specifications for this contract. ***NOTE: This change order is not effective until approved by the Engineer.***

Description of work to be done, estimate of quantities and prices to be paid. (Segregate between additional work at contract price, agreed price and force account.) Unless otherwise stated, rates for rental of equipment cover only such time as equipment is actually used and no allowance will be made for idle time. This last percentage shown is the net accumulated increase or decrease from the original quantity in the Engineer's Estimate.

Revise Section 10-1.41, TEMPORARY TOWERS, of the Special Provisions as shown on Sheets 2 through 5 of this change order.

By signing this change order, the Contractor agrees this resolves Request For Information (RFI's) ABF-RFI-0004, 0004R1, 0005, 0005R1 and 0005R2.

The Contractor agrees to perform this work at ~~not~~ NO additional cost to the Department.

GS. MO

Estimated Cost: **Increase** ☐ **Decrease** ☐ **$0.00**

By reason of this order the time of completion will be adjusted as follows: 0 days

Submitted by

Signature	Resident Engineer Gary Pursell, P.E., Sup.T.E.	Date 2/28/07

Approval Recommended by

Signature	Supervising Bridge Engineer Richard Morrow, Sup. BE	Date 2/27/07

Engineer Approval by

Signature	Supervising Transportation Engineer Gary Pursell, Sup. TE	Date 3/14/07

We the undersigned contractor, have given careful consideration to the change proposed and agree, if this proposal is approved, that we will provide all equipment, furnish the materials, except as may otherwise be noted above, and perform all services necessary for the work above specified, and will accept as full payment therefor the prices shown above.

NOTE: If you, the contractor, do not sign acceptance of this order, your attention is directed to the requirements of the specifications as to proceeding with the ordered work and filing a written protest within the time therein specified.

Contractor Acceptance by

Signature	(Print name and title) Michael D. Flowers Project Director	Date 3-14-07

TEMPORARY TOWER DESIGN

The temporary tower seismic load resisting structural system shall ~~consist of~~ be ductile. This system shall consist of either a steel braced frames or a steel moment resisting frame with welded or bolted connections used for field erection splices. Isolation may be used as part of the structural system to reduce the seismic demands. However, stoppers shall be used to limit relative displacement beyond the maximum design relative displacement. The isolation shall be designed to carry all other load cases elastically. Welded connections performed in the field or in the Contractor's fabrication facilities shall be designed in accordance with AISC or API RP2A for hot rolled sections and steel tubular sections, respectively. The Contractor shall provide 2 copies of the stated codes to the Engineer. Timber walkways and decks will be permitted.

Cable bracing and tie-rod bracing will not be permitted.

Timber connections shall be designed in conformance with the procedures, stresses and loads permitted in the Falsework Manual as published by the California Department of Transportation, Division of Structures, Division of Structure Construction.

The construction equipment loads shall be the actual weight of the construction equipment, material and personnel, but in no case shall be less than 960 N/m2 of deck surface area and 1100 N/m along the deck edges.

The design of temporary towers shall conform to both the design service load and ultimate limit state criteria set in these special provisions. The service load criteria will be met by the load combinations stated in "Design Load Combinations for Load Factor Design" and the ultimate limit state criteria will be met by the pushover analyses in "Seismic Design Loads".

The following codes shall be used to detail and to establish temporary tower capacities:

Subject	Design Code or Reference	Year
Structural Steel – All Members and Connections except Tubular Members**	~~AISC-LRFD~~ ANSI/AISC 360-05*	~~1999~~ 2005
Structural Steel – Tubular Members and Connections**	API RP2A-LRFD	July 1993
Concrete	AASHTO-LRFD Bridge Construction Specifications	2nd Edition
Falsework	State of California Dept. of Transportation – Falsework Manual	Revision 32, November 2001

* With reference to ~~AISC Seismic Provisions for Structural Steel Buildings, 1997~~ ANSI/AISC 341-05 including Supplement No. 1 and ASCE/SEI 7-05, including Supplement No. 1. Response modification coefficients, when used, shall not be more than 50% of the values allowed by these codes.

** All connections shall comply with applicable codes and be designed to be stronger than the connected members. The requirement for the connections to be stronger than the connected members may be waived by the Engineer if the Contractor demonstrates through calculations that no failure of a connection or connections would occur. These calculations shall include a non-linear static pushover analysis to the deformation state of probable (use of probable properties) collapse of the system, define the probable collapse mechanism, and demonstrate that a connection or connections will not be the cause of collapse.

For connections between rolled sections and tubular members the most stringent code of ~~AISC LRFD~~ ANSI/AISC 360-05 and API RP2A-LRFD shall govern.

A single code, specification or recommended practice shall be applied consistently for a specific structure type or load.

Design of temporary towers shall account for any change in the loads imposed on the tower by the bridge superstructure due to the construction sequence of the bridge.

Temporary towers shall be designed to adequately support the superstructure of the bridge without exceeding a demand-to-capacity ratio in the box girder of 1.0 for all design load combinations.

The temporary tower design calculations shall demonstrate that the total design settlement of temporary towers does not exceed 25 mm at the mudline for the governing design load combination.

The twentieth paragraph of Section 51-1.06A "Falsework Design and Drawings," of the Standard Specifications shall not apply.

The design of temporary towers shall be based on assumed loads that are equal to or greater than those described in this section.

The Contractor shall be responsible for the proper evaluation of the falsework materials and design of the falsework to safely carry the actual loads imposed.

The fifth and sixth paragraphs of Section 51-1.06A(1), "Design Loads," of the Standard Specifications shall not apply.

Vertical Loads

Temporary towers and their foundations shall be designed to carry the anticipated total effective tower load.

The total effective tower load shall be determined including, at a minimum, the effects of the following:

A. Tower and foundation, including fenders;
B. Load from supported bridge; and
C. Contractor's equipment and live load.

The vertical loads from the supported bridge shall be calculated by the Contractor for the selected construction method. Vertical loads shown on the plans are for information only.

Seismic Design Loads

Temporary towers shall be designed to be ductile and to resist horizontal seismic loads as defined below in combination with the appropriate vertical loads covering controlling construction stages. The seismic analyses shall consider the interactions of the temporary towers with the bridge superstructure at all appropriate stages. Seismic design loads need not be considered during lifting operations.

The temporary towers shall remain serviceable and capable of carrying the design loads at the peak seismic displacements.

Analysis and design calculations shall correctly incorporate all contributing mass, stiffness, loading and energy dissipation characteristics of the temporary towers including geotechnical and structural components and hydrodynamic added mass. P-delta effects shall be considered in the analyses. Assumed scour depth shall be 0.5 m plus one pile diameter.

Acceleration levels applied to the temporary towers shall be generated using the Acceleration Response Spectrum shown on plan sheet "Construction Sequence 2." The response spectrum can be used for all locations along the length of the self-anchored suspension bridge as input motion. These lateral loadings supersede the 0.02 g lateral load requirement in the California Department of Transportation Falsework Manual.

Modal spectral analysis with sufficient number of modes to capture at least 90% of the mass of the structure shall be used to establish the peak seismic displacements. To establish the ultimate limit state, a longitudinal and transverse static push-over analyses shall be used to verify the stability of the temporary tower and its ductility. Tower vertical load carrying members and connections shall remain elastic. Structural steel bracing members~~, and~~ piles, horizontal members in moment resisting frames, and shear links in an eccentric braced frame may yield. ~~The temporary tower structural system shall have a minimum displacement ductility of 2.~~ Pushover analyses of the temporary towers shall be carried out based upon displaced shapes defined, at a minimum, as the primary transverse and longitudinal mode shapes. The mode shapes shall be determined from modal analyses of the temporary towers and the supported bridge superstructure. The temporary tower, in a non-linear pushover analysis, shall meet the following criteria:

Structural System Ductility (μ) $\geq$ 2.0, i.e. $\Delta_{ult} \geq 2.0\ \Delta y$, where Δ_y = effective yield point of the structural system and Δ_{ult} = the total nominal displacement capacity of the structure. However, at locations where the design wind displacement exceeds the design seismic displacement, the following criteria may be used:

Structural System Ductility (μ) $\geq$ 1.5, i.e. $\Delta_{ult} \geq 1.5\ \Delta_y$; and Deformation Capacity (Δ_{ult}) $\geq$ 3.0 Δ_{sa}, where Δ_{sa} = peak seismic displacement demand.

Seismic demands shall be determined for two independent horizontal loading conditions in perpendicular directions. The directions are defined to be in the longitudinal axis of the bridge and the transverse axis of the bridge. In order to account for directional uncertainty of earthquake motions, the demands resulting from analyses of the two perpendicular seismic loading directions shall be combined into two load cases as follows:

EQ load case 1 1.0 longitudinal and 0.3 transverse
EQ load case 2 0.3 longitudinal and 1.0 transverse

~~Acceleration levels applied to the temporary towers shall be generated using the Acceleration Response Spectrum shown on plan sheet "Construction Sequence 2." The response spectrum can be used for all locations along the length of the self-anchored suspension bridge as input motion. These lateral loadings supersede the 0.02 g lateral load requirement in the California Department of Transportation Falsework Manual.~~

REGISTERED PROFESSIONAL ENGINEER
STEVE MARGARIS
Steve Marg
No. 36845
Exp. 7/22/2008
CIVIL
STATE OF CALIFORNIA

STATE OF CALIFORNIA - DEPARTMENT OF TRANSPORTATION

CONTRACT CHANGE ORDER MEMORANDUM

TO: Pete Siegenthaler, Prin. TE / Gary Pursell, P.E., Sup T.E.

FROM: Gary Pursell, P.E., Sup.T.E.

FILE: E.A. 04 - 0120F4
CO-RTE-PM SF-80-13.2/13.9
FED. NO.

CCO#: 6 SUPPLEMENT#: 0 Category Code: CHTX

CONTINGENCY BALANCE (incl. this change) $145,313,830.00

COST: $0.00 INCREASE ☐ DECREASE ☐

HEADQUARTERS APPROVAL REQUIRED? ☑ YES ☐ NO

SUPPLEMENTAL FUNDS PROVIDED: $0.00

IS THIS REQUEST IN ACCORDANCE WITH ENVIRONMENTAL DOCUMENTS? ☑ YES ☐ NO

CCO DESCRIPTION:
Temporary Tower Design Criteria

PROJECT DESCRIPTION:
CONSTRUCT SELF-ANCHORED SUSPENSION BRIDGE

Original Contract Time:	Time Adj. This Change:	Previously Approved CCO Time Adjustments:	Percentage Time Adjusted: (including this change)	Total # of Unreconciled Deferred Time CCO(s): (including this change)
2490 Day(s)	0 Day(s)	30 Day(s)	1 %	0

THIS CHANGE ORDER PROVIDES FOR:

This Change Order modifies Section 10-1.41, "Temporary Towers", Sub-Section "Temporary Tower Design" as follows:

1. Updates the referenced ANSI/AISC design codes from 1999 to 2005 specifications.
2. Revises the specified codes to be consistent and compatible.
3. Allows for alternative bracing systems as proposed in Design Change Request No. 188 which was prepared for inclusion in Addendum No. 8.
4. Clarifies ductility requirements that had been questioned during the bid process and by the Contractor.
5. Modifies multiple specifications to comply to Requests for Information (RFI's) from the Contractor that have been generated on this issue.
6. Reduces risk of sizable potential claims by reaching an agreement with the Contractor on the design requirements.

Through bidder inquiries and RFI's from the Contractor, it was observed that the temporary design specifications did not refer to the latest seismic design code criteria. Furthermore, the specified codes have been altered to be consistent and to include provisions for alternate seismic bracing systems. Alternative bracing systems, such as Eccentrically Braced Frames (EBF's), were allowed in a reply to RFI No. 0005R1 as an acceptable form of the steel bracing allowed by the specifications.

The concept of ductility as provided in the contract and described in the replies to several bidder inquiries is somewhat open to interpretation. The changes proposed in this change order clarify and tie down requirements in a way that meet the design intent and resolves the ambiguity, thus avoiding any misinterpretations of the specifications. This change clarifies the design requirement and specifically includes these other bracing systems in the contract.

This Change Order results in a specification that will provide a temporary tower system that fully meets the designers intent and significantly reduces the risk of claim issues arising from differences in interpretation of the tower design specifications. This change updates the design criteria used for the temporary towers to use the most recent seismic design codes. This was initially addressed as a bid inquiry during the bidding process, alerting the designers that this change was needed. However, this change was not addressed prior to bid opening, due to Addendum No. 8 not being incorporated into the bid package. Therefore, this update to the Special Provisions is to be addressed in a change order.

The changes also include resolution and inclusion of replies to several RFI's from the Contractor including RFI Nos. 0004, 0004R1, 0005, 0005R1 and 0005R2 dealing specifically with the temporary towers.

This Change Order has been agreed to with the Contractor to be a no cost or time impact to the project. A zero cost analysis is on file.

This change order has received concurrence from Dr. Brian Maroney (Deputy, Toll Bridge Program Manager), Pete Siegenthaler (Prin. Bridge Eng.), Rick Morrow (Struct. Rep.), Rob Kobal (HQ), Marwan Nader (Designer of Record), Ade Akinsanya (HQ Structures), Steve Margaris (PE), Wenyi Long (Caltrans Steel Committee) and the Seismic Safety Peer Review Panel.

A Division of Construction "Issue and Approve" was obtained on 3/01/2007 for this change order. A copy is attached for your reference.

ADA Notice: For individuals with sensory disabilities, this document is available in alternate formats. For information call: (916) 654-6410 or TDD (916) 654-3880 or write Records and Forms Management, 1120 N Street, MS-89, Sacramento, CA 95814.

CONCURRED BY:

Construction Engineer:	Res. Eng., Gary Pursell, Sup. TE	Date	2/16/07
Bridge Engineer:	Struct Rep, Rick Morrow, Sup TE	Date	2/15/07
Project Engineer:	HQ, Steve Margaris	Date	3/5/07
Project Manager:	Dep TB Proj Man, Brian Marooney	Date	3/5/07
FHWA Rep.:		Date	
Environmental:	Others. See Memo	Date	
Other (specify):	HQ, Jon Tapping	Date	2/6/07
Other (specify):	PCE, Pete Siegenthaler, Prin TE	Date	2/21/07
District Prior Approval By:		Date	
HQ (Issue Approve) By:	HQ, Ken Darby	Date	3/1/07
Resident Engineer's Signature:		Date	

Gary Pursell 3/14/07

ESTIMATE OF COST

	THIS REQUEST	TOTAL TO DATE
ITEMS	$0.00	$0.00
FORCE ACCOUNT	$0.00	$0.00
AGREED PRICE	$0.00	$0.00
ADJUSTMENT	$0.00	$0.00
TOTAL	$0.00	$0.00

FEDERAL PARTICIPATION

☐ PARTICIPATING ☐ PARTICIPATING IN PART ☑ NONE
☐ NON-PARTICIPATING (MAINTENANCE) ☐ NON-PARTICIPATING

FEDERAL SEGREGATION (if more than one Funding Source or P.I.P. type)
☑ CCO FUNDED PER CONTRACT ☐ CCO FUNDED AS FOLLOWS

FEDERAL FUNDING SOURCE	PERCENT

ADA Notice: For individuals with sensory disabilities, this document is available in alternate formats. For information call: (916) 654-6410 or TDD (916) 654-3880 or write Records and Forms Management, 1120 N Street, MS-89, Sacramento, CA 95814.

CONTRACT CHANGE ORDER

Change Requested by: Engineer

CCO: 8	Suppl. No. 0	Contract No. 04 - 0120F4	Road SF-80-13.2/13.9	FED. AID LOC.:

To: **AMERICAN BRIDGE/FLUOR ENTERPRISES INC A JOINT VENTURE**

You are directed to make the following changes from the plans and specifications or do the following described work not included in the plans and specifications for this contract. ***NOTE: This change order is not effective until approved by the Engineer.***

Description of work to be done, estimate of quantities and prices to be paid. (Segregate between additional work at contract price, agreed price and force account.) Unless otherwise stated, rates for rental of equipment cover only such time as equipment is actually used and no allowance will be made for idle time. This last percentage shown is the net accumulated increase or decrease from the original quantity in the Engineer's Estimate.

Extra Work at Force Account:

Continue to operate the existing working drawing campus facility (aka Mission Control), from the Skyway Project (04-012024) as an extension of Contract Item No. 1, "Working Drawing Campus", as authorized by the Engineer.

Labor, equipment and material authorized by the Engineer, as necessary, will be paid in accordance with the provisions of Section 4-1.03D, "Extra Work" of the Standard Specifications and Section 5-1.24, "Force Account Payment" of the Special Provisions.

There will no adjustment in contract time as this change order does not affect the controlling operation.

Estimated cost of Extra Work at Force Account $100,000.00

Estimated Cost: Increase ☑ Decrease ☐ **$100,000.00**

By reason of this order the time of completion will be adjusted as follows: 0 days

Submitted by

Signature Gary Pursell	**Resident Engineer:** Gary Pursell	Date 9/28/06

Approval Recommended by

Signature Gary Pursell	**Construction Engineer:** Gary Pursell	Date 9/28/06

Engineer Approval by

Signature Gary Pursell	**(Print name and title)** Gary Pursell - Construction Engineer	Date 9/28/06

We the undersigned contractor, have given careful consideration to the change proposed and agree, if this proposal is approved, that we will provide all equipment, furnish the materials, except as may otherwise be noted above, and perform all services necessary for the work above specified, and will accept as full payment therefor the prices shown above.

NOTE: If you, the contractor, do not sign acceptance of this order, your attention is directed to the requirements of the specifications as to proceeding with the ordered work and filing a written protest within the time therein specified.

Contractor Acceptance by

Signature Michael D. Flowers	**(Print name and title)** Michael D. Flowers	Date 9.28.06

STATE OF CALIFORNIA - DEPARTMENT OF TRANSPORTATION

CONTRACT CHANGE ORDER MEMORANDUM

DATE: 9/28/2006

TO: PETER SIEGENTHALER / Gary Pursell	FILE: **E.A.** 04 - 0120F4
FROM: Gary Pursell	**CO-RTE-PM** SF-80-13.2/13.9
	FED. NO.
CCO#: **8** SUPPLEMENT#: **0** Category Code: **CASA**	CONTINGENCY BALANCE (incl. this change) **$147,449,880.00**
COST: **$100,000.00** INCREASE ☑ DECREASE ☐	HEADQUARTERS APPROVAL REQUIRED? ☐ YES ☑ NO
SUPPLEMENTAL FUNDS PROVIDED: **$0.00**	IS THIS REQUEST IN ACCORDANCE WITH ENVIRONMENTAL DOCUMENTS? ☑ YES ☐ NO
CCO DESCRIPTION: Mission Control Campus	**PROJECT DESCRIPTION:** CONSTRUCT SELF-ANCHORED SUSPENSION BRIDGE

LOCATION: IN SAN FRANCISCO COUNTY IN SAN FRANCISCO FROM 0.6 KM TO 1.3 KM EAST OF THE YERBA BUENA TUNNEL EAST PORTAL

THIS CHANGE ORDER PROVIDES FOR:

Continue to operate the existing working drawing campus facility (aka Mission Control), from the Skyway Project (04-012024) as an extension of Contract Item No. 1, "Working Drawing Campus", of the contract.

In addition to the SAS Working Drawing Campus, it has been observed that additional space is needed for working drawing review personnel to help with the resolution of plan discrepancies and expeditiously resolve conflicts in order to mitigate delays to the contract. The Skyway Project (04-012024), has a working drawing campus trailer known as "Mission Control", of which will soon be in the process of demobilization, since the working drawings are near completion for that project. To continue to use the facilities for SAS working drawing personnel, the SAS Contractor will take-over the renting of the equipment and payment of utilities, and the State will bear it's share of the cost.

This work is not covered by any contract items. Therefore, payment for this work will be at Extra Work at Force Account for an estimated cost of $100,000.00, which can be financed from the contingency fund.

No time adjustment is warranted as this change order does not affect the controlling operation.

Design and Maintenance concurrence is not needed for this change order since this change is temporary in nature.

This change order was field approved by the Resident Engineer on September 28, 2006.

CONCURRED BY:

Construction Engineer:	Gary Pursell	Date9/28/2006
Bridge Engineer:		Date
FHWA Representative:		Date
Project Engineer:		Date
Other (specify):		Date
		Date
		Date
District Prior Approval By:		Date
HQ (Issue Approve) By:		Date
Resident Engineer's Signature:	Gary Pursell	Date 9/28/06

ESTIMATE OF COST

	THIS REQUEST	TOTAL TO DATE
ITEMS	$0.00	$0.00
FORCE ACCOUNT	$100,000.00	$100,000.00
AGREED PRICE	$0.00	$0.00
ADJUSTMENT	$0.00	$0.00
TOTAL	$100,000.00	$100,000.00

FEDERAL PARTICIPATION

☐ PARTICIPATING ☐ PARTICIPATING IN PART ☑ NONE
☐ NON-PARTICIPATING (MAINTENANCE) ☐ NON-PARTICIPATING

FEDERAL SEGREGATION (if more than one Funding Source or P.I.P. type)
☑ CCO FUNDED PER CONTRACT ☐ CCO FUNDED AS FOLLOWS

FEDERAL FUNDING SOURCE	PERCENT

STATE OF CALIFORNIA - DEPARTMENT OF TRANSPORTATION

CONTRACT CHANGE ORDER

Change Requested by: Engineer

CCO: 8	Suppl. No. 1	Contract No. 04 - 0120F4	Road SF-80-13.2/13.9	FED. AID LOC.:

To: **AMERICAN BRIDGE/FLUOR ENTERPRISES INC A JOINT VENT**

You are directed to make the following changes from the plans and specifications or do the following described work not included in the plans and specifications for this contract. ***NOTE: This change order is not effective until approved by the Engineer.***

Description of work to be done, estimate of quantities and prices to be paid. (Segregate between additional work at contract price, agreed price and force account.) Unless otherwise stated, rates for rental of equipment cover only such time as equipment is actually used and no allowance will be made for idle time. This last percentage shown is the net accumulated increase or decrease from the original quantity in the Engineer's Estimate.

Extra Work at Force Account:

Provide additional funds.

Estimated cost of Extra Work at Force Account $150,000.00

Estimated Cost: Increase ☑ **Decrease** ☐ **$150,000.00**

By reason of this order the time of completion will be adjusted as follows: 0 days

Submitted by

Signature	Resident Engineer	Date
D. Schram	Darryl Schram for Gary Pursell, P.E., Sup.T.E.	6/19/08

Approval Recommended by

Signature	Supervising Transportation Engineer	Date
Gary Pursell	Gary Pursell, P.E., Sup. TE	6/19/08

Engineer Approval by

Signature	Supervising Transportation Engineer	Date
Gary Pursell	Gary Pursell, P.E., Sup. TE	6/23/08

We the undersigned contractor, have given careful consideration to the change proposed and agree, if this proposal is approved, that we will provide all equipment, furnish the materials, except as may otherwise be noted above, and perform all services necessary for the work above specified, and will accept as full payment therefor the prices shown above.

NOTE: If you, the contractor, do not sign acceptance of this order, your attention is directed to the requirements of the specifications as to proceeding with the ordered work and filing a written protest within the time therein specified.

Contractor Acceptance by

Signature	(Print name and title)	Date
NOT APPLICABLE		

STATE OF CALIFORNIA - DEPARTMENT OF TRANSPORTATION

CONTRACT CHANGE ORDER MEMORANDUM

DATE: 6/23/2008

TO: Mike Forner, Prin. TE / Gary Pursell, P.E., Sup T.E.

FROM: Gary Pursell, P.E., Sup.T.E.

FILE: E.A. 04 - 0120F4
CO-RTE-PM SF-80-13.2/13.9
FED. NO.

CCO#: 8 | SUPPLEMENT#: 1 | Category Code: CASA

CONTINGENCY BALANCE (incl. this change) $138,718,056.40

COST: $150,000.00 INCREASE ☑ DECREASE ☐

HEADQUARTERS APPROVAL REQUIRED? ☑ YES ☐ NO

SUPPLEMENTAL FUNDS PROVIDED: $0.00

IS THIS REQUEST IN ACCORDANCE WITH ENVIRONMENTAL DOCUMENTS? ☑ YES ☐ NO

CCO DESCRIPTION:
Provide Additional Funds

PROJECT DESCRIPTION:
CONSTRUCT SELF-ANCHORED SUSPENSION BRIDGE

Original Contract Time:	Time Adj. This Change:	Previously Approved CCO Time Adjustments:	Percentage Time Adjusted: (including this change)	Total # of Unreconciled Deferred Time CCO(s): (including this change)
2490 Day(s)	0 Day(s)	30 Day(s)	1 %	0

THIS CHANGE ORDER PROVIDES FOR:

Providing additional funds to operate the existing working drawings campus facility (aka Mission Control), from the Skyway Project (04-012024), as an extension of Contract Item No. 1, "Working Drawing Campus," of the contract.

In addition to the SAS Working Drawings Campus, it was observed that additional space was needed for the working drawing review personnel to help the resolution of plan discrepancies and expeditiously resolve conflicts in order to mitigate delays to the contract. The additional cost of this supplement is due to extending the use of the campus from 2008 to the end of the contract in 2013.

Payment for this supplemental change will be as Extra Work at Force Account for an estimated amount of $150,000.00, which can be financed from the contingency fund. This will result in a cumulative amount of $250,000.00 for this change order. Copies of the costs will be placed in the project files.

No adjustment of contract time is warranted, as this change order does not affect the controlling operation.

This change order supplement has received concurrences from Gary Pursell (Sup. TE), Mike Forner (Principal TE), Pat Treacy (HQ Rep) and Ken Terpstra (Project Manager). Maintenance concurrence is not required for this change.

This supplement change order received an Issue and Approve from the Division of Construction on June 23, 2008. A copy is attached for reference.

CONCURRED BY:

Construction Engineer:	Res. Eng., Gary Pursell, Sup. TE	Date	6/10/08
Bridge Engineer:		Date	
Project Engineer:		Date	
Project Manager:	Proj Manager, Ken Terpstra	Date	6/18/08
FHWA Rep.:		Date	
Environmental:		Date	
Other (specify)	PCE, Mike Forner, Prin TE	Date	6/5/08
Other (specify):	HQ, Patrick Treacy	Date	6/5/08
District Prior Approval By:		Date	
HQ (Issue Approve) By:	HQ, Ken Darby	Date	6/23/08
Resident Engineer's Signature:	Gary Pursell	Date	6/23/08

ESTIMATE OF COST

	THIS REQUEST	TOTAL TO DATE
ITEMS	$0.00	$0.00
FORCE ACCOUNT	$150,000.00	$250,000.00
AGREED PRICE	$0.00	$0.00
ADJUSTMENT	$0.00	$0.00
TOTAL	$150,000.00	$250,000.00

FEDERAL PARTICIPATION

☐ PARTICIPATING ☐ PARTICIPATING IN PART ☑ NONE
☐ NON-PARTICIPATING (MAINTENANCE) ☐ NON-PARTICIPATING

FEDERAL SEGREGATION (if more than one Funding Source or P.I.P. type)
☑ CCO FUNDED PER CONTRACT ☐ CCO FUNDED AS FOLLOWS

FEDERAL FUNDING SOURCE	PERCENT

ADA Notice: For individuals with sensory disabilities, this document is available in alternate formats. For information call: (916) 654-6410 or TDD (916) 654-3880 or write Records and Forms Management, 1120 N Street, MS-89, Sacramento, CA 95814

STATE OF CALIFORNIA - DEPARTMENT OF TRANSPORTATION

CONTRACT CHANGE ORDER

Change Requested by: Engineer

CCO: 9	Suppl. No. 0	Contract No. 04 - 0120F4	Road SF-80-13.2/13.9	FED. AID LOC.:

To: **AMERICAN BRIDGE/FLUOR ENTERPRISES INC A JOINT VENTURE**

You are directed to make the following changes from the plans and specifications or do the following described work not included in the plans and specifications for this contract. ***NOTE: This change order is not effective until approved by the Engineer.***

Description of work to be done, estimate of quantities and prices to be paid. (Segregate between additional work at contract price, agreed price and force account.) Unless otherwise stated, rates for rental of equipment cover only such time as equipment is actually used and no allowance will be made for idle time. This last percentage shown is the net accumulated increase or decrease from the original quantity in the Engineer's Estimate.

Extra Work at Force Account:

COST REDUCTION INCENTIVE PROPOSALS (CRIP) WORKSHOPS

In accordance with Section 5-1.15, "Cost Reduction Incentive Proposals," of the Contract Special Provisions reimburse the Contractor 100% of costs to facilitate enhanced CRIP workshops within 90 days of contract award, or as mutually acceptable to both the Contractor and the Engineer.

CORRIDOR VALUE ANALYSIS WORKSHOPS

In accordance with Section 5-1.114, "Corridor Value Analysis," of the Contract Special Provisions reimburse the Contractor 100% of costs to facilitate "SFOBB Corridor Value Analysis" workshops.

PROJECT-SPECIFIC VALUE ANALYSIS WORKSHOPS

In accordance with Section 5-1.114, "Corridor Value Analysis," of the Contract Special Provisions reimburse the Contractor 50% of costs to facilitate project-specific "Value Analysis" workshops.

Cost for above listed workshops will be determined as provided in Section 9-1.03B, "Work Performed by Special Forces or Other Special Services," of the Standard Specifications, except no markup will be allowed.

All other costs associated with the above listed workshops including, but not limited to, wages and travel expenses, shall be considered to be included in the various items of work and borne separately by the party incurring the costs, and no additional compensation will be allowed therefor.

Estimated cost of Extra Work at Force Account $50,000.00

Estimated Cost: Increase ☑ **Decrease** ☐ **$50,000.00**

By reason of this order the time of completion will be adjusted as follows: 0 days

Submitted by

Signature Gary Pursell	Resident Engineer: Gary Pursell	Date 6/8/06

Approval Recommended by

Signature Gary Pursell	Construction Engineer: Gary Pursell	Date 6/8/06

Engineer Approval by

Signature Gary Pursell	(Print name and title) Gary Pursell - Construction Engineer	Date 6/8/06

We the undersigned contractor, have given careful consideration to the change proposed and agree, if this proposal is approved, that we will provide all equipment, furnish the materials, except as may otherwise be noted above, and perform all services necessary for the work above specified, and will accept as full payment therefor the prices shown above.

NOTE: If you, the contractor, do not sign acceptance of this order, your attention is directed to the requirements of the specifications as to proceeding with the ordered work and filing a written protest within the time therein specified.

Contractor Acceptance by

Signature [illegible]	(Print name and title) Michael D. Flowers Project Director	Date 4-8-06

STATE OF CALIFORNIA - DEPARTMENT OF TRANSPORTATION

CONTRACT CHANGE ORDER MEMORANDUM

DATE: 6/8/2006

TO: PETER SIEGENTHALER / Gary Pursell	FILE: **E.A.** 04 - 0120F4
FROM: Gary Pursell	**CO-RTE-PM** SF-80-13.2/13.9
	FED. NO.
CCO#: **9** SUPPLEMENT#: **0** Category Code: **AWZZ**	CONTINGENCY BALANCE (incl. this change) **$148,652,590.00**
COST: **$50,000.00** INCREASE ☑ DECREASE ☐	HEADQUARTERS APPROVAL REQUIRED? ☐ YES ☑ NO
SUPPLEMENTAL FUNDS PROVIDED: **$50,000.00**	IS THIS REQUEST IN ACCORDANCE WITH ENVIRONMENTAL DOCUMENTS? ☑ YES ☐ NO
CCO DESCRIPTION: CRIP and VA Workshops	**PROJECT DESCRIPTION:** CONSTRUCT SELF-ANCHORED SUSPENSION BRIDGE

LOCATION: IN SAN FRANCISCO COUNTY IN SAN FRANCISCO FROM 0.6 KM TO 1.3 KM EAST OF THE YERBA BUENA TUNNEL EAST PORTAL

THIS CHANGE ORDER PROVIDES FOR:

Reimbursing the Contractor for the Department's share of the costs to provide Cost Reduction Incentive Proposals (CRIP) Workshops, Corridor Value Analysis Workshops, and Project-Specific Value Analysis Workshops as provided per Section 5-1.15, "Cost Reduction Incentive Proposals," and per Section 5-1.114, "Corridor Value Analysis," of the Contract Special Provisions.

Workshop costs will be determined per Section 9-1.03B, "Work Performed by Special Forces or Other Special Services," of the Standard Specifications, except no markup will be allowed. All other costs associated with workshops including, but not limited to, wages and travel expenses, shall be considered to be included in the various items of work and borne separately by the party incurring the costs, and no additional compensation will be allowed therefor.

This work is not covered by any contract items. Therefore, payment for this work will be at Extra Work at Force Account for an estimated cost of $50,000.00, which can be financed from the supplemental funds of which $161,400.00 were allotted for this work.

No other recommendations or concurrences are required as this work is anticipated by the contract documentation.

No adjustment of contract time is warranted, as this change does not affect the controlling operation.

CONCURRED BY:

Construction Engineer: Gary Purcell	Date 6/8/2006
Bridge Engineer:	Date
FHWA Representative:	Date
Project Engineer:	Date
Other (specify):	Date
	Date
	Date
District Prior Approval By:	Date
HQ (Issue Approve) By:	Date
Resident Engineer's Signature:	Date

ESTIMATE OF COST

	THIS REQUEST	TOTAL TO DATE
ITEMS	$0.00	$0.00
FORCE ACCOUNT	$50,000.00	$50,000.00
AGREED PRICE	$0.00	$0.00
ADJUSTMENT	$0.00	$0.00
TOTAL	$50,000.00	$50,000.00

FEDERAL PARTICIPATION

☐ PARTICIPATING ☐ PARTICIPATING IN PART ☑ NONE
☐ NON-PARTICIPATING (MAINTENANCE) ☐ NON-PARTICIPATING

FEDERAL SEGREGATION (if more than one Funding Source or P.I.P. type)
☐ CCO FUNDED PER CONTRACT ☐ CCO FUNDED AS FOLLOWS

FEDERAL FUNDING SOURCE	PERCENT

49.009

STATE OF CALIFORNIA - DEPARTMENT OF TRANSPORTATION

CONTRACT CHANGE ORDER

Change Requested by: Engineer

CCO: 10	Suppl. No. 0	Contract No. 04 - 0120F4	Road SF-80-13.2/13.9	FED. AID LOC.:

To: **AMERICAN BRIDGE/FLUOR ENTERPRISES INC A JOINT VENT**

You are directed to make the following changes from the plans and specifications or do the following described work not included in the plans and specifications for this contract. ***NOTE: This change order is not effective until approved by the Engineer.***

Description of work to be done, estimate of quantities and prices to be paid. (Segregate between additional work at contract price, agreed price and force account.) Unless otherwise stated, rates for rental of equipment cover only such time as equipment is actually used and no allowance will be made for idle time. This last percentage shown is the net accumulated increase or decrease from the original quantity in the Engineer's Estimate.

Provide a 30 (thirty) day non-compensable contract time extension for submitting a preliminary CRIP concept as provided in Section 5-1.15, "Cost Reduction Incentive Proposals", of the Special Provisions. The Contractor submitted five preliminary CRIP concepts on July 14, 2006, within the first 90 days after contract award, and is therefore entitled to said time extension.

This 30-day time extension shall be applied to the current contract completion date for each of the three phases; Phase 1, 2 and 3, as shown in Section 4, "Beginning of Work, Time of Completion and Liquidated Damages", of the Special Provisions. Furthermore, the 30-day non-compensable time extension will be applied after expiration of the number of working days measured for payment, for time related to overhead, in accordance with Section 10-1.14, "Time Related Overhead", of the Special Provisions. This 30-day time extension will also extend the completion date for Phase 1 for the purpose of incentive payment for early completion of Phase 1, as provided in Section 4, "Beginning of Work, Time of Completion and Liquidated Damages", of the Special Provisions.

It is mutually agreed the five preliminary CRIP concepts submitted on July 14, 2006, will not be accepted and further developed as CRIP's, and that no additional time extension will be considered nor granted pursuant to Section 5-1.15, "Cost Reduction Incentive Proposals", of the Special Provisions, except for the 30-day non-compensable contract time extension provided herein.

COST OF THIS CHANGE ORDER $0.00

Estimated Cost: **Increase** ☐ **Decrease** ☐ **$0.00**

By reason of this order the time of completion will be adjusted as follows: 30 days

Submitted by

Signature	Resident Engineer: Gary Pursell	Date 11/14/06

Approval Recommended by

Signature	Construction Engineer: Gary Pursell	Date 11/14/06

Engineer Approval by

Signature	(Print name and title) Peter Siegenthaler - Chief	Date 11/27/06

We the undersigned contractor, have given careful consideration to the change proposed and agree, if this proposal is approved, that we will provide all equipment, furnish the materials, except as may otherwise be noted above, and perform all services necessary for the work above specified, and will accept as full payment therefor the prices shown above.

NOTE: If you, the contractor, do not sign acceptance of this order, your attention is directed to the requirements of the specifications as to proceeding with the ordered work and filing a written protest within the time therein specified.

Contractor Acceptance by

Signature	(Print name and title) Michael Flowers - Project Director	Date 11.20.06

STATE OF CALIFORNIA - DEPARTMENT OF TRANSPORTATION

CONTRACT CHANGE ORDER MEMORANDUM

DATE: 11/14/2006 Page 1 of 1

TO: Peter Siegenthaler / Gary Pursell	FILE: E.A. 04 - 0120F4
FROM: Gary Pursell	CO-RTE-PM SF-80-13.2/13.9
	FED. NO.
CCO#: 10 SUPPLEMENT#: 0 Category Code: AFZZ	CONTINGENCY BALANCE (incl. this change) $145,369,880.00
COST: $0.00 INCREASE ☐ DECREASE ☐	HEADQUARTERS APPROVAL REQUIRED? ☑ YES ☐ NO
SUPPLEMENTAL FUNDS PROVIDED: $0.00	IS THIS REQUEST IN ACCORDANCE WITH ENVIRONMENTAL DOCUMENTS? ☑ YES ☐ NO
CCO DESCRIPTION: CRIP Working Day Extension	**PROJECT DESCRIPTION:** CONSTRUCT SELF-ANCHORED SUSPENSION BRIDGE

Original Contract Time:	Time Adj. This Change:	Previously Approved CCO Time Adjustments:	Percentage Time Adjusted: (including this change)	Total # of Unreconciled Deferred Time CCO(s): (including this change)
2490 Day(s)	30 Day(s)	0 Day(s)	1 %	0

THIS CHANGE ORDER PROVIDES FOR:

This CCO grants a 30-day non-compensable time extension as provided for in Section 5-1.15, "Cost Reduction Incentive Proposals", of the Special Provisions.

As this time extension is provided for in the contract, this is not a contract change. The CCO was prepared to provide:

1) A mechanism for granting the time extension.

2) Document an agreement regarding the application of the time extension to the various time of completions, Phases 1, 2, & 3, contained in the contract.

The Contractor submitted five (5) preliminary CRIP concepts on July 14, 2006, which is within the first 90 days after contract award, and is therefore entitled to the time extension under the terms of the contract.

Since the time extension in non-compensable, there will be no payment made for Time Related Overhead nor any other time related costs associated with this time extension.

This change has received concurrence from Principal Construction Manager, Pete Siegenthaler (11/09/06), HQ Liaison, Rob Kobal (11/14/06), and PM, Ken Terpstra (11/17/06). This change order received an HQ (Issue & Approve) from Ken Darby on 11/15/06 and is attached for your reference. Maintenance concurrence is not needed for this change order.

CONCURRED BY:		
Construction Engineer:	Gary Pursell	Date 11/8/06
Bridge Engineer:		Date
Project Engineer:		Date
Project Manager:	Ken Terpstra	Date 11/17/06
FHWA Rep.:		Date
Environmental:		Date
Other (specify):	HQ, Rob Kobal	Date 11/14/06
Other (specify):	PCE, Pete Siegenthaler	Date 11/9/06
District Prior Approval By:		Date
HQ (Issue Approve) By:	Ken Darby	Date 11/15/06
Resident Engineer's Signature: Gary Pursell		Date 11/27/06

ESTIMATE OF COST

	THIS REQUEST	TOTAL TO DATE
ITEMS	$0.00	$0.00
FORCE ACCOUNT	$0.00	$0.00
AGREED PRICE	$0.00	$0.00
ADJUSTMENT	$0.00	$0.00
TOTAL	$0.00	$0.00

FEDERAL PARTICIPATION

☐ PARTICIPATING ☐ PARTICIPATING IN PART ☑ NONE
☐ NON-PARTICIPATING (MAINTENANCE) ☐ NON-PARTICIPATING

FEDERAL SEGREGATION (if more than one Funding Source or P.I.P. type)
☑ CCO FUNDED PER CONTRACT ☐ CCO FUNDED AS FOLLOWS

FEDERAL FUNDING SOURCE	PERCENT

ADA Notice: For individuals with sensory disabilities, this document is available in alternate formats. For information call: (916) 654-6410 or TDD (916) 654-3880 or write Records and Forms Management, 1120 N Street, MS-89, Sacramento, CA 95814.

STATE OF CALIFORNIA - DEPARTMENT OF TRANSPORTATION

CONTRACT CHANGE ORDER

Change Requested by: Engineer

CCO: 11	Suppl. No. 0	Contract No. 04 - 0120F4	Road SF-80-13.2/13.9	FED. AID LOC.:

To: **AMERICAN BRIDGE/FLUOR ENTERPRISES INC A JOINT VENT**

You are directed to make the following changes from the plans and specifications or do the following described work not included in the plans and specifications for this contract. ***NOTE: This change order is not effective until approved by the Engineer.***

Description of work to be done, estimate of quantities and prices to be paid. (Segregate between additional work at contract price, agreed price and force account.) Unless otherwise stated, rates for rental of equipment cover only such time as equipment is actually used and no allowance will be made for idle time. This last percentage shown is the net accumulated increase or decrease from the original quantity in the Engineer's Estimate.

Incorporate the following changes into the Project Plan Sheets:

1. Revise Project Plan Sheet Numbers 5, 6, and 7 of 1204, as shown on sheets 4, 5 and 6 of this change order.
2. Revise Plan sheet numbers 97, 98, and 99 of 1204 (E-14, E-15, and E-16) to reflect revised electrical manhole elevations, as shown on sheets 7, 8 and 9 of this change order.
3. On plan sheet number 132 of 1204: SHEET NOTE 5 should reference "Sheet No. 965 of 1204" instead of "Sheet No. 934 of 1161", as shown on sheet 10 of this change order.
4. On plan sheet numbers 133 and 208 of 1204: SHEET NOTE 3 should reference "Sheet No. 965 of 1204" instead of "Sheet No. 934 of 1161", as shown on sheets 11 and 12 of this change order.
5. On Project plan sheet number 233 of 1204: Revise electrical notation number 3 to read : "Ground cable shall be installed along full length of the 15 KV cable tray only", as shown on sheets 13 of this change order.

Incorporate the following changes into the Project Special Provisions:

1. Revise the Special Provisions, Section 10-4.06, "DEHUMIDIFIER SYSTEM", as shown on sheet 2 of this change order.
2. Revise the Special Provisions, Section 8-4.01, "AUDITS", as shown on sheet 3 of this change order.
3. Revise the Special Provisions, Section 5-1.25, "PAYMENTS", as shown on sheet 3 of this change order.
4. Revise the Special Provisions, Section 10-1.17, "ACCELERATED WORKING DRAWINGS SUBMITTAL", as shown on sheet 3 of this change order.
5. Revise the Special Provisions, Section 10-1.49, "TOWER CROSS BRACING SPHERICAL BUSHING BEARING", as shown on sheet 3 of this change order.

This is a no cost change order.

Estimated Cost: **Increase** ☐ **Decrease** ☐ **$0.00**

By reason of this order the time of completion will be adjusted as follows: 0 days

Submitted by

Signature Gary Pursell	**Resident Engineer:** Gary Pursell	**Date** 11/26/06

Approval Recommended by

Signature Gary Pursell	**Construction Engineer:** Gary Pursell	**Date** 11/27/06

Engineer Approval by

Signature Gary Pursell	**(Print name and title)** Peter Siegenthaler - Chief	**Date** 12/6/06

We the undersigned contractor, have given careful consideration to the change proposed and agree, if this proposal is approved, that we will provide all equipment, furnish the materials, except as may otherwise be noted above, and perform all services necessary for the work above specified, and will accept as full payment therefor the prices shown above.

NOTE: If you, the contractor, do not sign acceptance of this order, your attention is directed to the requirements of the specifications as to proceeding with the ordered work and filing a written protest within the time therein specified.

Contractor Acceptance by

Signature	**(Print name and title)** Michael D. Flowers Project Director	**Date** 12.1.06

A. DEHUMIDIFICATION SYSTEM INSTALLATION AND MAINTENANCE

1. In the Special Provisions, Section 10-4.06, "DEHUMIDIFIER SYSTEM," the "Instruction Manual" paragraph, Item C is revised as follows:

   "C. Maintenance recommendations and instructions for each type of equipment, including filter inspection schedule at start-up and initial operation."

2. In the Special Provisions, Section 10-4.06, "DEHUMIDIFIER SYSTEM," the "Dehumidifiers" paragraph, the following two (2) paragraphs are added after the first paragraph:

   "The Contractor shall coordinate plant installation access considerations with the dehumidification equipment manufacturer. After assembly and testing of the dehumidification equipment, it shall be capable of being disassembled into sections that expedites final assembly in the field using available access routes and access openings. The disassembled sections shall be adequately packaged and labeled for rapid assembly in the field. Consideration shall also be given to future maintenance and parts replacement through available permanent openings shown on the contract plans."

   "At the option of the Contractor, outdoor units may be equipped with skids for ease of initial installation. The Contractor shall also verify that maintenance and parts replacement for the outdoor units is possible through permanent access openings shown on the contract plans."

3. In the Special Provisions, Section 10-4.06, "DEHUMIDIFIER SYSTEM," the "Dehumidifier Unit Casing" paragraph, Item H is revised as follows:

   "H. Filters

   The unit casing shall include removable filters at the inlet of both process and reactivation air streams. These process side filters shall be mounted on sliding racks and accessible through panels equipped with fast-acting, captive hardware. The filters shall have a 35 percent efficiency and a 90 percent resistance conforming to the ASHRAE Weight Resistance Test. These filters shall preferably be integral with the dehumidification unit. Otherwise, filters shall be provided inline on process return side ducting, downstream of outside air mixing point. The reactivation side filter shall be a washable, metal mesh, pleated filter approximately 2" thick in a slotted housing. The housing may be integral with the unit or located downstream of mixing points."

4. In the Special Provisions, Section 10-4.06, "DEHUMIDIFIER SYSTEM," the "Moisture Removal Capacity Control" paragraph, Item C, the following sentence is added at the end of the item:

   "Instruments for humidity measurement if located in duct work, shall be located in the return system upstream of any mixing point with outside air and be installed per dehumidifier equipment manufacturer's recommendations."

5. In the Special Provisions, Section 10-4.06, "DEHUMIDIFIER SYSTEM," the "DUCTWORK AND ACCESSORIES" subsection, the "Ductwork" paragraph, the following paragraph is added after Item G.:

   "H. The Contractor shall verify the duct routing, support locations, tie-in routes and transitions to the approved equipment prior to purchasing and fabricating ductwork."

B. AUDITS

In the Special Provisions Section 8-4.01 AUDITS, revise the first paragraph as follows:

"Manufacturing or fabrication of the following materials shall not commence at a facility, nor will working drawings be accepted for submittal for those materials prior to the Engineer or his authorized representative completing ~~or waiving~~ a facility audit (Department audit) and issuing an audit report determining that the facility is in compliance with the "Manufacturing and Fabrication Self Qualification Audit" (MFSQA) and other contract requirements. These requirements may be waived or modified if permitted in writing by the Engineer."

C. PAYMENTS

In the Special Provisions Section 5-1.25 PAYMENTS, revise the ninth (last) paragraph as follows:

"To be eligible for these payments for any material stored outside the United States, the Contractor shall furnish an advance payment bond, first demand bank guarantee, or combination of no more than two thereof to secure the value of potential partial payments for material furnished but not incorporated in the work pursuant to these special provisions and Section 9-1.06, "Partial Payments," of the Standard Specifications. The advance payment bond or first demand bank guarantee shall be in a sum not less than the amount requested for payment by the Contractor, and shall, at a minimum, match the terms of the sample advance payment bond or first demand bank guarantee forms identified in "Project Information" in these special provisions. The value of the advance payment bond or first demand bank guarantee shall not be adjusted more than once per year, unless otherwise approved in writing by the Engineer. The Contractor shall certify in writing to the Engineer that the proposed bonding company or bank complies with these special provisions. The bonding company shall be licensed to do business in the State of California, and shall be certified to write a bond equal to 30% of the executed contract price by the United States Department of the Treasury. The bank shall have United States operations with a minimum rating of "A-" by either AM Best or Standard & Poor. All alterations, extensions of time, extra and additional work, and other changes authorized by these special provisions or any part of the contract may be made without securing the consent of the surety of the bond or the bank."

D. ACCELERATED WORKING DRAWINGS SUBMITTAL

In the Special Provisions Section 10-1.17 ACCELERATED WORKING DRAWINGS SUBMITTAL, revise the second paragraph as follows:

The Contractor shall receive approval from the Engineer for the preliminary erection plan and the weight control procedure prior to any approval of working drawings for the fabrication of the box girder structural steel, tower structural steel, and the cable system, unless otherwise approved in writing by the Engineer. Prior approval of preliminary erection plans and/or weight control procedures will not relieve the Contractor of responsibility for revisions to approved working drawings resulting from the subsequent review and approval of preliminary erection plans and/or weight control procedures.

E. TOWER CROSS BRACING SPHERICAL BUSHING BEARING

In the Special Provisions Section 10-1.49 TOWER CROSS BRACING SPHERICAL BUSHING BEARING, Subsection "WORKING DRAWINGS" revise the fifth paragraph as follows:

Each working drawing and calculation sheet shall be signed by an engineer who is registered as a Civil Engineer or Mechanical Engineer in the United States of America. ~~This registered Civil Engineer or Mechanical Engineer shall be a full-time employee of the tower cross bracing spherical bushing bearing manufacturer~~.

DIST	COUNTY	ROUTE	KILOMETER POST TOTAL PROJECT	SHEET No	TOTAL SHEETS
04	SF	80	13.2/13.9	5R1	1204

Gene V. Lushenovich 12/19/02
REGISTERED CIVIL ENGINEER DATE

PLANS APPROVAL DATE

PARSONS BRINCKERHOFF QUADE & DOUGLAS, INC.
303 Second St., Suite 700N
San Francisco, CA 94107-1317

REGISTERED PROFESSIONAL ENGINEER Gene V. Lushenovich No. C64338 Exp. 12/31/03 CIVIL STATE OF CALIFORNIA

The State of California or its officers or agents shall not be responsible for the accuracy or completeness of electronic copies of this plan sheet.

Caltrans now has a web site! To get to the web site, go to http://www.dot.ca.gov

Caltrans Metric

REGISTERED PROFESSIONAL ENGINEER Mark Brodzki No. C65694 Exp. 9/31/07 CIVIL STATE OF CALIFORNIA

NOTE:

1. Elevation is based on 1929 National Geodetic Vertical Datum (NGVD).

MARK	DATE	DESCRIPTIONS	REV	CK	CCO NO.
1	10/16/06	Removed Matchline Elevations (Revised Elevations)	LR	MG	11

REVISIONS

CONTRACT CHANGE ORDER NO. 11
SHEET 4 OF 13

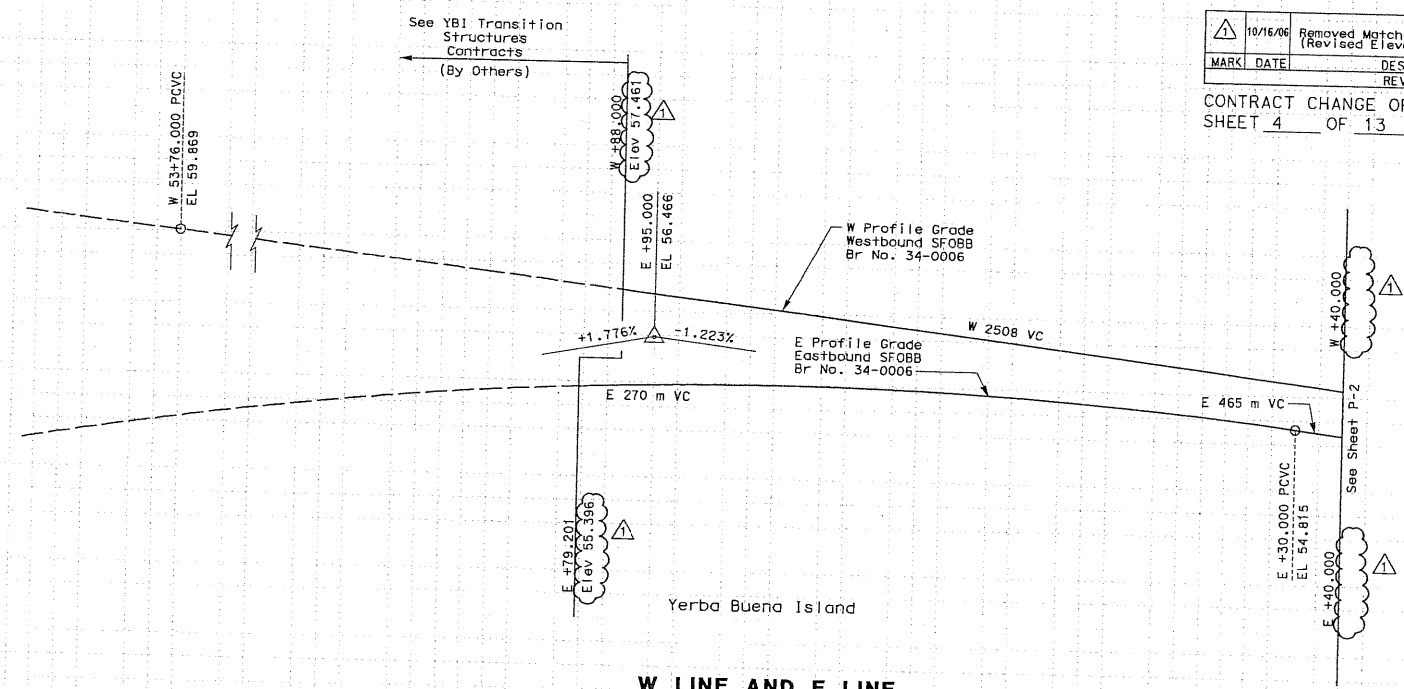

W LINE AND E LINE

ALL DIMENSIONS ARE IN METERS UNLESS OTHERWISE SHOWN

PROFILE

SCALE: 1:500 HORIZ
1:50 VERT

P-1

Station: +80, 56+00, +20, +40, +60, +80, 57+00, +20, +40, +60

Cu. 0
M. Exc. 0
Emb. 0

FOR REDUCED PLANS ORIGINAL SCALE IS IN MILLIMETERS 0 20 40 60 80

USERNAME => $USER
DGN FILE => $REQUEST

CU 04251

EA 0120F1

LAST REVISION 00-00-00 DATE PLOTTED => $DATE TIME PLOTTED => $TIME

STATE OF CALIFORNIA - DEPARTMENT OF TRANSPORTATION
Caltrans

DESIGN OVERSIGHT: Bob Zandipour

CALCULATED/DESIGNED BY: GVL 11/02
CHECKED BY: KR 11/02

REVISED BY / DATE REVISED

61 60 59 58 57 56 55 54 53 52

NOTE:

1. Elevation is based on 1929 National Geodetic Vertical Datum (NGVD).

DIST	COUNTY	ROUTE	KILOMETER POST TOTAL PROJECT	SHEET No	TOTAL SHEETS
04	SF	80	13.2/13.9	6R1	1204

Gene V. Lusherovich 12/19/02
REGISTERED CIVIL ENGINEER DATE

PLANS APPROVAL DATE

PARSONS BRINCKERHOFF QUADE & DOUGLAS, INC.
303 Second St., Suite 700N
San Francisco, CA 94107-1317

The State of California or its officers or agents shall not be responsible for the accuracy or completeness of electronic copies of this plan sheet.

Caltrans now has a web site! To get to the web site, go to http://www.dot.ca.gov

REGISTERED PROFESSIONAL ENGINEER Mark Grodzki No. C65594 Exp. 9/31/07 CIVIL STATE OF CALIFORNIA

MARK	DATE	DESCRIPTIONS	REV	CK	CCO NO.
1	10/16/06	Removed Matchline Elevations	LR	MG	11

REVISIONS

CONTRACT CHANGE ORDER NO. 11
SHEET 5 OF 13

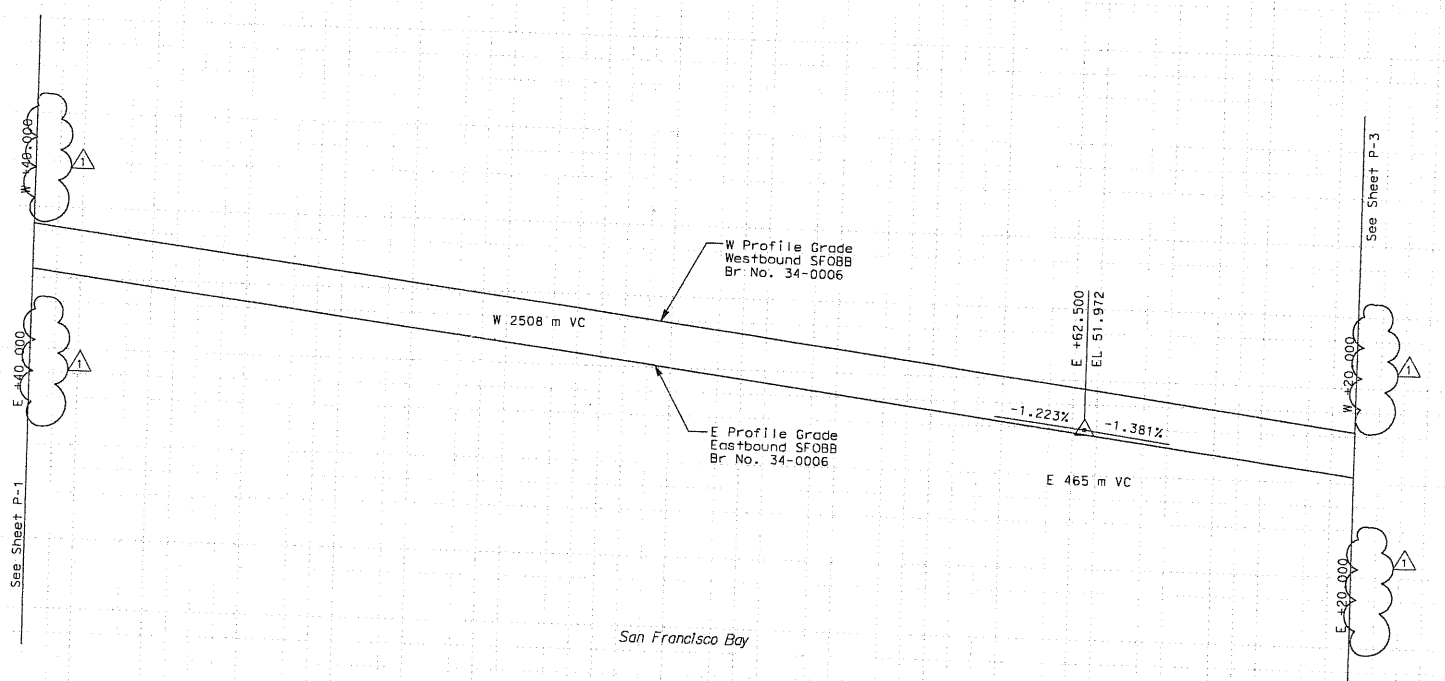

W LINE AND E LINE

ALL DIMENSIONS ARE IN METERS UNLESS OTHERWISE SHOWN

PROFILE

SCALE: 1:500 HORIZ
1:50 VERT

P-2

Station	+40	+60	+80	58+00	+20	+40	+60	+80	59+00	+20	+40	+60	+80	60+00	+20	+40
Cu.																
M. Exc.																
M. Emb.																

0
0

FOR REDUCED PLANS ORIGINAL SCALE IS IN MILLIMETERS 0 20 40 60 80

USERNAME =>$USER
DGN FILE =>$REQUEST

CU 04251 | EA 0120F1

LAST REVISION 00-00-00 DATE PLOTTED => $DATE TIME PLOTTED => $TIME

STATE OF CALIFORNIA - DEPARTMENT OF TRANSPORTATION
Caltrans

DESIGN OVERSIGHT: Bob Zandipour

CALCULATED/DESIGNED BY: GVL 11/02
CHECKED BY: KR 11/02

REVISED BY
DATE REVISED

NOTE:

1. Elevation is based on 1929 National Geodetic Vertical Datum (NGVD).

DIST	COUNTY	ROUTE	KILOMETER POST TOTAL PROJECT	SHEET No	TOTAL SHEETS
04	SF	80	13.2/13.9	7R1	1204

Gene V. Lusherovich 12/19/02
REGISTERED CIVIL ENGINEER DATE

PLANS APPROVAL DATE

PARSONS BRINCKERHOFF QUADE & DOUGLAS, INC.
303 Second St., Suite 700N
San Francisco, CA 94107-1317

REGISTERED PROFESSIONAL ENGINEER Gene V. Lusherovich No. C54338 Exp. 12/31/03 CIVIL STATE OF CALIFORNIA

The State of California or its officers or agents shall not be responsible for the accuracy or completeness of electronic copies of this plan sheet.

Caltrans now has a web site! To get to the web site, go to http://www.dot.ca.gov

Caltrans Metric

REGISTERED PROFESSIONAL ENGINEER Mark Grodzki No. C65594 Exp. 9/31/07 CIVIL STATE OF CALIFORNIA

MARK	DATE	DESCRIPTIONS	REV	CK	CCO NO.
1	10/16/06	Removed Matchline Elevations	LR	MG	11

REVISIONS

CONTRACT CHANGE ORDER NO. 11
SHEET 6 OF 13

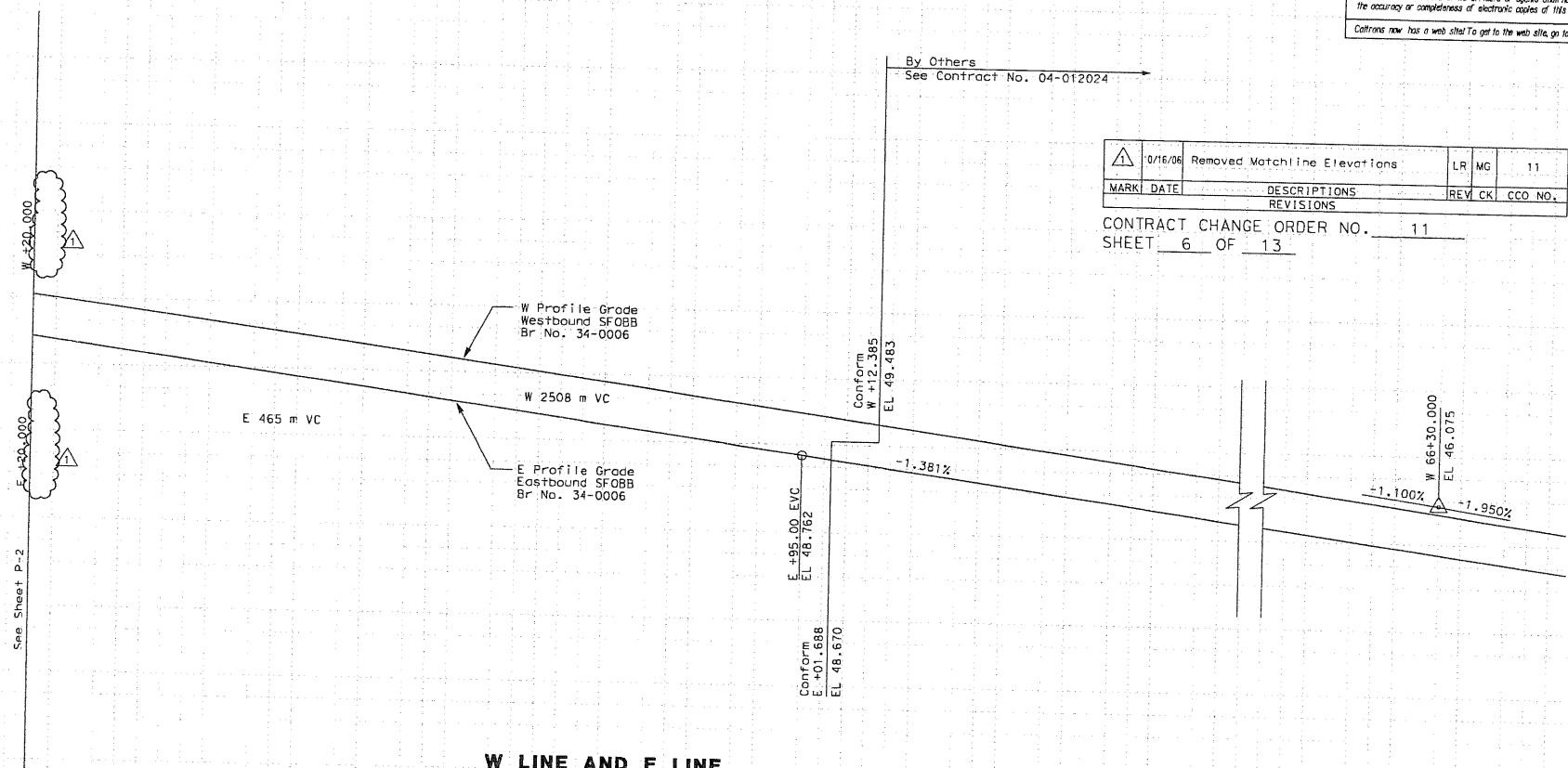

W LINE AND E LINE

ALL DIMENSIONS ARE IN METERS UNLESS OTHERWISE SHOWN

PROFILE
SCALE: 1:500 HORIZ
1:50 VERT

P-3

Station	+20	+40	+60	+80	61+00	+20	+40	+60	+80	62+00	+20	+40	+60	+80	63+00
Cu.															
M. Exc.															
M. Emb.															

0
0

FOR REDUCED PLANS ORIGINAL SCALE IS IN MILLIMETERS 0 20 40 60 80

USERNAME =>$USER
DGN FILE =>$REQUEST

CU 04251

EA 0120F1

STATE OF CALIFORNIA - DEPARTMENT OF TRANSPORTATION
Caltrans

DESIGN OVERSIGHT: Bob Zandipour

CALCULATED/DESIGNED BY: GVL DATE 11/02
CHECKED BY: KR 11/02
REVISED BY
DATE REVISED

LAST REVISION 00-00-00
DATE PLOTTED => $DATE
TIME PLOTTED => $TIME

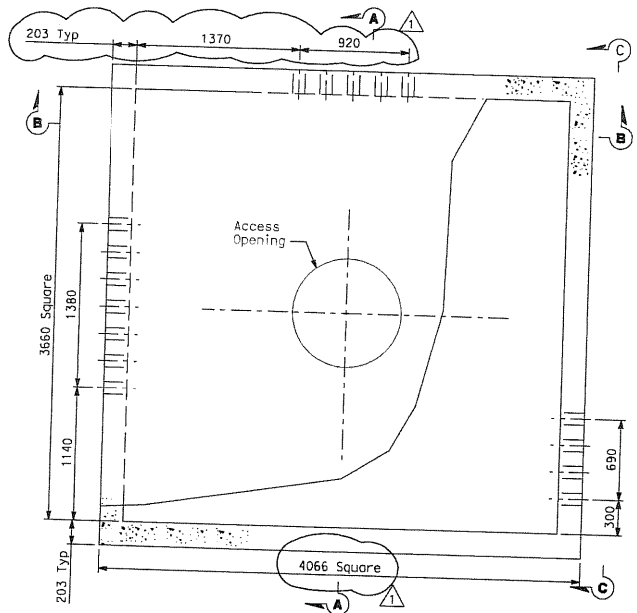

PLAN-MANHOLE-25
SCALE: 1:20 (600 V)

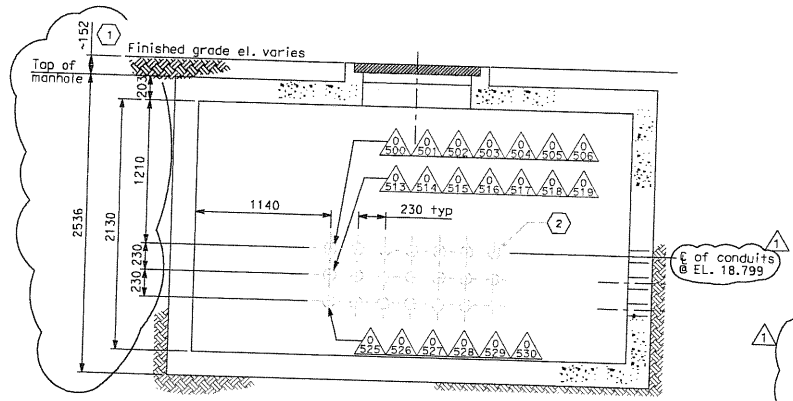

SECTION A-A
SCALE: 1:20

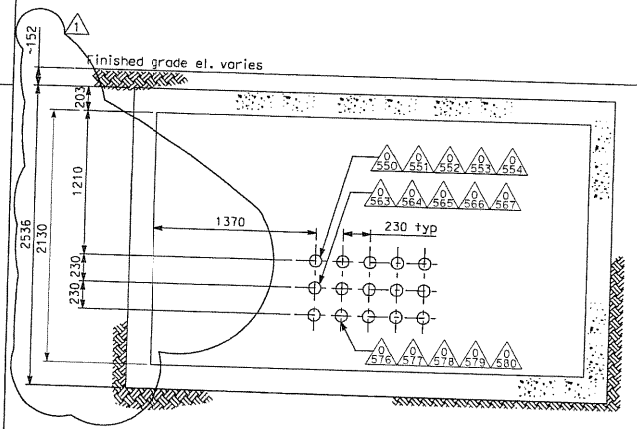

SECTION B-B
SCALE: 1:20

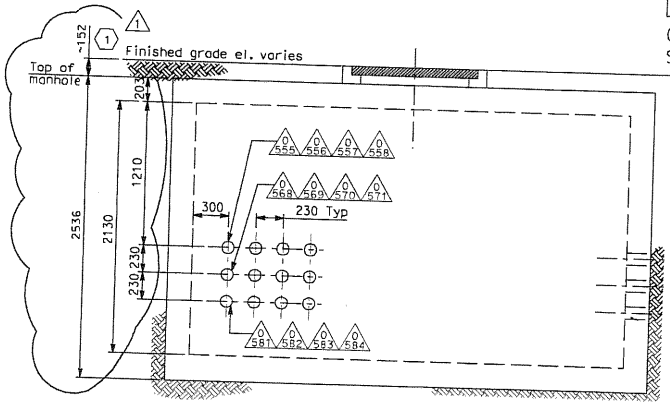

SECTION C-C
SCALE: 1:20

DIST	COUNTY	ROUTE	KILOMETER POST TOTAL PROJECT	SHEET No	TOTAL SHEETS
04	SF	80	13.2/13.9	97R1	1204

Caltrans Metric

12/19/02
REGISTERED ELECTRICAL ENGINEER DATE

REGISTERED PROFESSIONAL ENGINEER JENS ERLINGSSON No. 8249 Exp. 9/30/06 ELECTRICAL STATE OF CALIFORNIA

PLANS APPROVAL DATE

PB POWER, Inc.
A Parsons Brinckerhoff Company
303 Second St., Suite 700N
San Francisco, CA 94107-1317

The State of California or its officers or agents shall not be responsible for the accuracy or completeness of electronic copies of this plan sheet.

Caltrans now has a web site! To get to the web site, go to http://www.dot.ca.gov

NOTES:

1. References:
   - For duct bank and manhole plan, see sheet E-11.
   - For typical manhole and duct bank details, see sheet E-17.
   - For duct bank sections, see sheets E-19 and E-23.
   - For circuit and conduit/cable tray schedules, see sheets starting at E-401
2. For other related work, not shown on this sheet, see Electrical Special Provisions.

SHEET NOTES:

1. Approximate distance of manhole necking or riser is from the finished grade and top of manhole. Maximum length of manhole necking or riser shall be 914 mm.
2. Not in contract. (Work included on contract 04-120P4).

MARK	DATE	DESCRIPTIONS	REV	CK	CCO NO.
1	1/10/06	Revised Manhole detail	CR	JE	11

REVISIONS

CONTRACT CHANGE ORDER NO. 11
SHEET 7 OF 13

DETAILS
UNDERGROUND
MANHOLE PLANS AND SECTIONS
SCALE AS NOTED

E-14

ALL DIMENSIONS IN MILLIMETERS UNLESS OTHERWISE SHOWN

FOR REDUCED PLANS ORIGINAL SCALE IS IN MILLIMETERS 0 20 40 60 80

DGN FILE => $REQUEST
USERNAME => $USER

CU 04251 | EA 0120F1

LAST REVISION 00-00-00 | DATE PLOTTED => $DATE | TIME PLOTTED => $TIME

STATE OF CALIFORNIA - DEPARTMENT OF TRANSPORTATION
Caltrans

DESIGN OVERSIGHT: BEHZAD GOLEMOHAMMADI

CALCULATED/ DESIGNED BY	AB	DATE 11/04	REVISED BY
CHECKED BY	--	--/--	DATE REVISED

FILE: t:\13103\ms\pas\electrical\cont\13103es1571.dgn
DATE: 10-Jul-00 15:21

DIST	COUNTY	ROUTE	KILOMETER POST TOTAL PROJECT	SHEET No	TOTAL SHEETS
04	SF	80	13.2/13.9	98R1	1204

REGISTERED ELECTRICAL ENGINEER 12/19/02 DATE

PLANS APPROVAL DATE

PB POWER, Inc.
A Parsons Brinckerhoff Company
303 Second St., Suite 700N
San Francisco, CA 94107-1317

REGISTERED PROFESSIONAL ENGINEER JENS ERLINGSSON No. 8249 Exp. 9/30/06 ELECTRICAL STATE OF CALIFORNIA

The State of California or its officers or agents shall not be responsible for the accuracy or completeness of electronic copies of this plan sheet.

Caltrans now has a web site! To get to the web site, go to http://www.dot.ca.gov

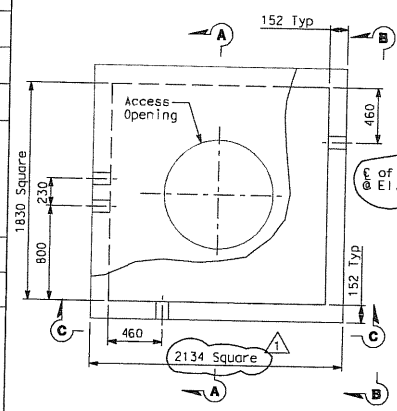

PLAN-MANHOLE-26
SCALE: 1:20 (12.47 kV)

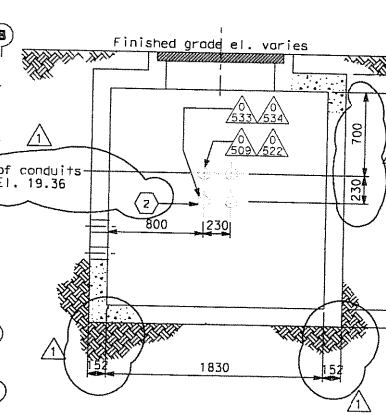

SECTION A-A
SCALE: 1:20

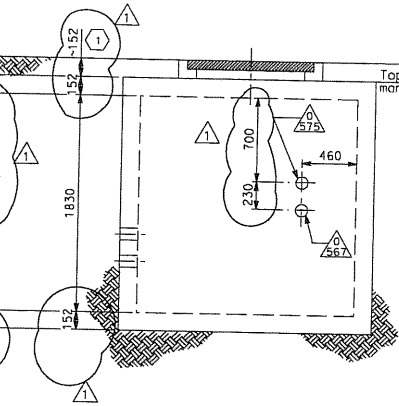

SECTION B-B
SCALE: 1:20

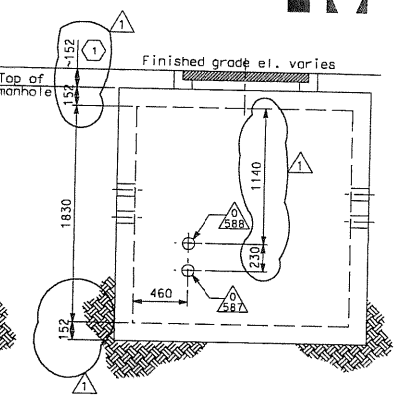

SECTION C-C
SCALE: 1:20

NOTES:

1. References:
   - For duct banks and manhole plan, see sheet E-11.
   - For typical manhole and duct bank details, see sheet E-17.
   - For duct bank sections, see sheets E-19 and E-23.
   - For circuit and conduit/cable tray schedules, see sheets starting at E-401
2. For other related work, not shown on this sheet, see Electrical Special Provisions.

SHEET NOTES:

1. Approximate distance of manhole necking or riser is from the finished grade and top of manhole. Maximum length of manhole necking or riser shall be 914 mm.
2. Not in contract. (Work included on contract 04-120P4).

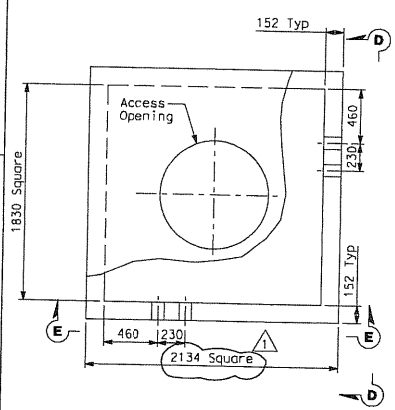

PLAN-MANHOLE-28
SCALE: 1:20 (Non-Caltrans Utilities)

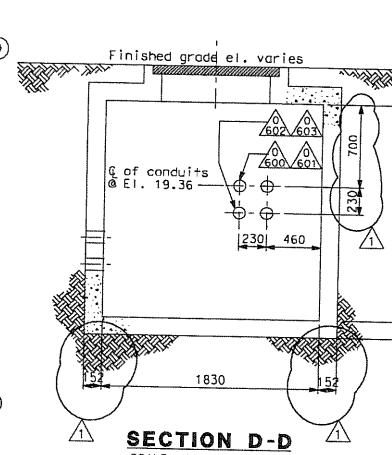

SECTION D-D
SCALE: 1:20

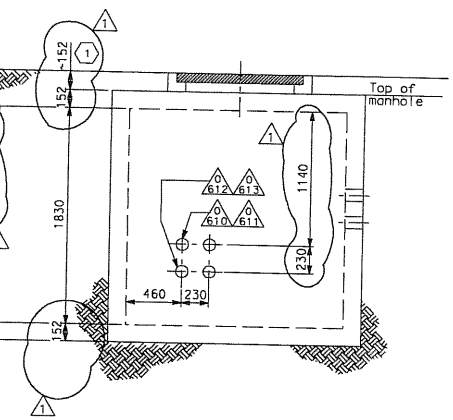

SECTION E-E
SCALE: 1:20

MARK	DATE	DESCRIPTIONS	REV	CK	CCO NO.
1	1/10/06	Revised Manhole detail	CR	JE	11

REVISIONS

CONTRACT CHANGE ORDER NO. 11
SHEET 8 OF 13

DETAILS
UNDERGROUND
MANHOLE PLAN AND SECTIONS
SCALE AS NOTED

E-15

STATE OF CALIFORNIA - DEPARTMENT OF TRANSPORTATION
Caltrans

DESIGN OVERSIGHT: BEHZAD GOLEMOHAMMADI
CALCULATED/DESIGNED BY: AB DATE 11/04
CHECKED BY: CYF 11/01
REVISED BY
DATE REVISED

FOR REDUCED PLANS ORIGINAL SCALE IS IN MILLIMETERS 0 20 40 60 80
DGN FILE => $REQUEST
USERNAME => $USER
CU 04251
EA 0120F1
LAST REVISION 00-00-00
DATE PLOTTED => $DATE
TIME PLOTTED => $TIME

DIST	COUNTY	ROUTE	KILOMETER POST TOTAL PROJECT	SHEET No	TOTAL SHEETS
04	SF	80	13.2/13.9	99R1	1024

REGISTERED ELECTRICAL ENGINEER DATE 12/19/02

PLANS APPROVAL DATE

PB POWER, Inc.
A Parsons Brinckerhoff Company
303 Second St., Suite 700N
San Francisco, CA 94107-1317

REGISTERED PROFESSIONAL ENGINEER JENS ERLINGSSON No. 8249 EXP. 9/30/05 ELECTRICAL STATE OF CALIFORNIA

The State of California or its officers or agents shall not be responsible for the accuracy or completeness of electronic copies of this plan sheet.

Caltrans now has a web site! To get to the web site, go to http://www.dot.ca.gov

Caltrans Metric

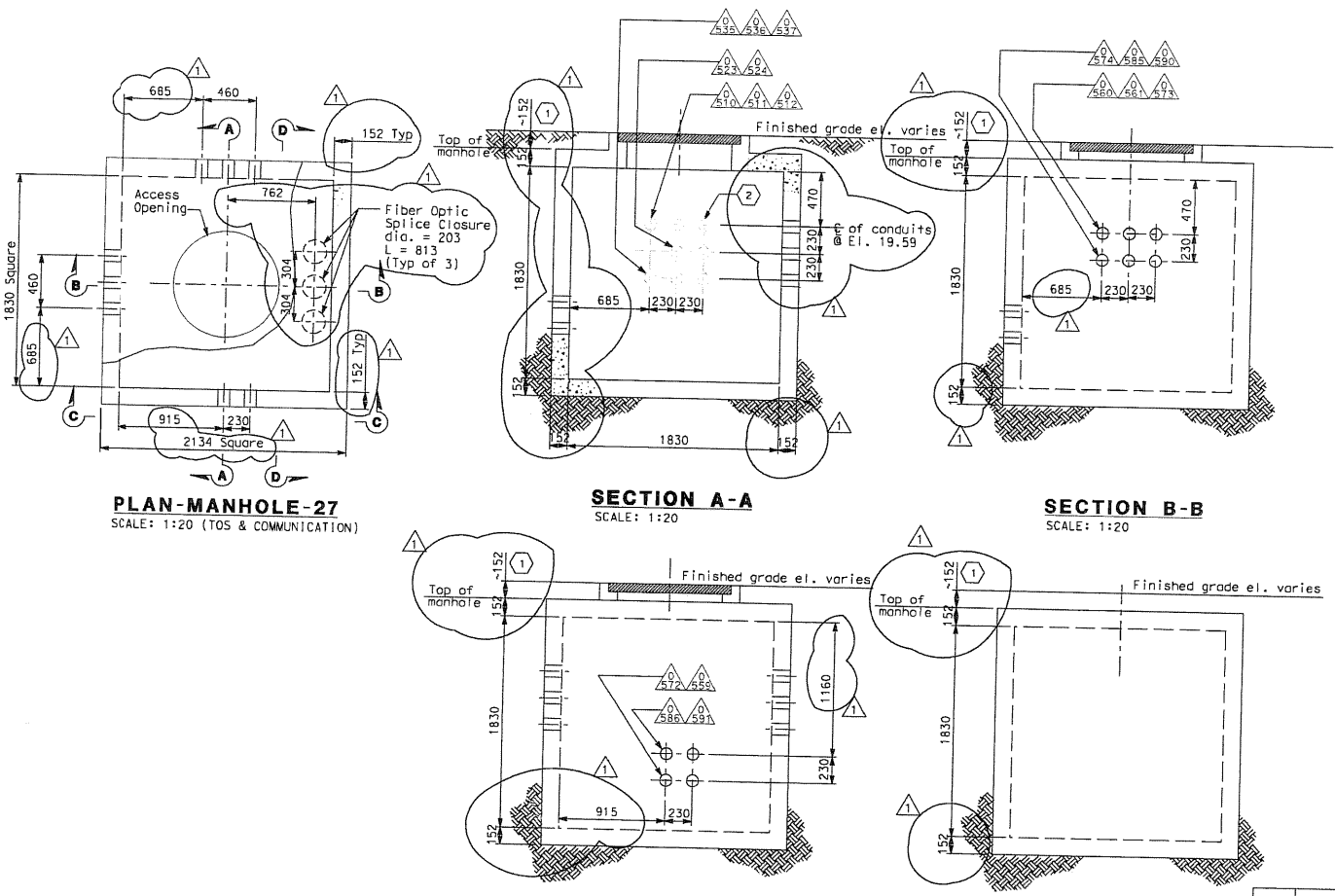

PLAN-MANHOLE-27
SCALE: 1:20 (TOS & COMMUNICATION)

SECTION A-A
SCALE: 1:20

SECTION B-B
SCALE: 1:20

SECTION C-C
SCALE: 1:20

SECTION D-D
SCALE: 1:20

NOTES:

1. References:
   - For duct bank and manhole plan, see sheet E-11.
   - For typical duct bank and manhole details, see sheet E-17.
   - For duct bank sections, see sheet E-19.
   - For circuit and conduit/cable tray schedules, see sheets starting at E-401.
2. For other related work, not shown on this sheet, see Electrical Special Provisions.

SHEET NOTES:

(1) Approximate distance of manhole necking or riser is from the finished grade and top of manhole. Maximum length of manhole necking or riser shall be 914 mm.

MARK	DATE	DESCRIPTIONS	REV	CK	CCO NO.
1	1/10/06	Revised Manhole detail	CR	JE	11

REVISIONS

CONTRACT CHANGE ORDER NO. 11
SHEET 9 OF 13

DETAILS
UNDERGROUND
MANHOLE PLAN AND SECTIONS
SCALE AS NOTED

E-16

STATE OF CALIFORNIA - DEPARTMENT OF TRANSPORTATION
Caltrans

DESIGN OVERSIGHT: BEHZAD GOLEMOHAMMADI

CALCULATED/DESIGNED BY: AB | DATE 11/04 | REVISED BY: -- | DATE REVISED: --/--
CHECKED BY

FOR REDUCED PLANS ORIGINAL SCALE IS IN MILLIMETERS 0 20 40 60 80

DGN FILE => $REQUEST
USERNAME => $USER

CU 04251 | EA 0120F1

LAST REVISION 00-00-00 | DATE PLOTTED => $DATE | TIME PLOTTED => $TIME

DIST	COUNTY	ROUTE	KILOMETER POST TOTAL PROJECT	SHEET No	TOTAL SHEETS
04	SF	80	13.2/13.9	132R1	1204

REGISTERED ELECTRICAL ENGINEER 12/19/02 DATE

PLANS APPROVAL DATE

PB POWER, Inc.
A Parsons Brinckerhoff Company
303 Second St., Suite 700N
San Francisco, CA 94107-1317

REGISTERED PROFESSIONAL ENGINEER JENS ERLINGSSON No. 8249 EXP. 9/30/06 ELECTRICAL STATE OF CALIFORNIA

The State of California or its officers or agents shall not be responsible for the accuracy or completeness of electronic copies of this plan sheet.

Caltrans now has a web site! To get to the web site, go to http://www.dot.ca.gov

Caltrans Metric

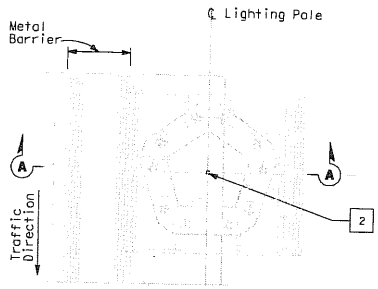

PLAN
CONDUIT STUB-UP PLAN FOR ROADWAY LIGHTING ON A METAL BASE
SCALE 1:20

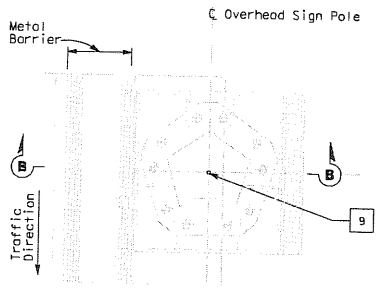

PLAN
CONDUIT STUB-UP PLAN FOR OVERHEAD SIGN ON A METAL BASE
SCALE 1:20

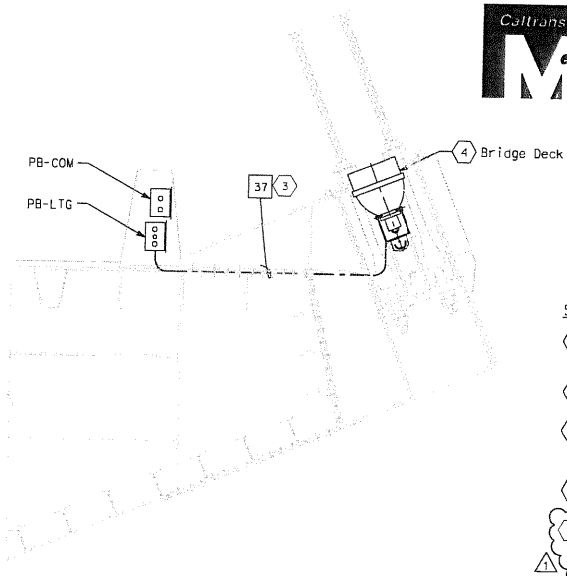

TYPICAL PYLON FLOODLIGHT CONDUIT LAYOUT
SCALE 1:20

SHEET NOTES:

1. Bond grounding bushing to ground lug of lighting pole with #6 bare copper wire.
2. Conduits for future light pipe shall continue from this pull box.
3. Conduit shall be clear of all piping and pipe sleeves. Route conduit on top of deck plate, outside of girder box.
4. For pylon floodlightting layout, see sheets E-47 & E-48.
5. See Utility Detail No. 1 (Sheet No. 965 of 1204) for conduit penetration through girder plate and lighting pole metal base. The Contractor shall install seglant between the sleeve and conduit for future light pipe, plug and cap sleeve to prevent water or moisture from passing inside the sleeve. (1)

MARK	DATE	DESCRIPTIONS	REV	CK	CCO NO.
1	10/16/06	Revised sheet notes.	LR	MG	11

REVISIONS

CONTRACT CHANGE ORDER NO. 11
SHEET 10 OF 13

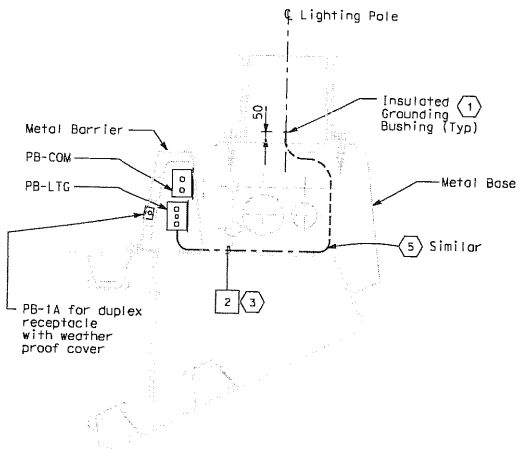

SECTION A-A
SCALE 1:20

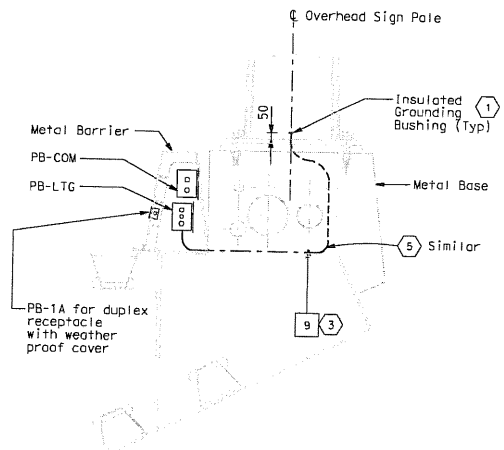

SECTION B-B
SCALE 1:20

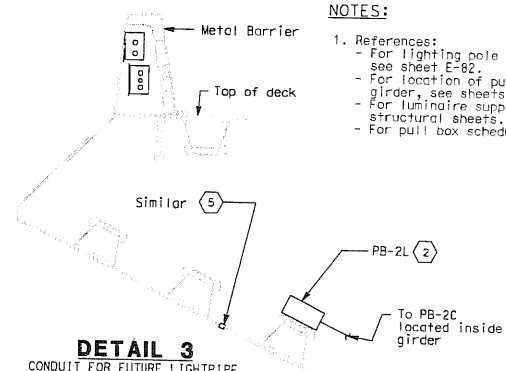

DETAIL 3
CONDUIT FOR FUTURE LIGHTPIPE CONNECTIONS ON A STEEL STRUCTURE
SCALE: 1:20

NOTES:

1. References:
   - For lighting pole schedule, see sheet E-82.
   - For location of pull boxes inside girder, see sheets E-96 thru E-101.
   - For luminaire support details, see structural sheets.
   - For pull box schedule, see sheet E-83.

DETAILS
SAS SUPERSTRUCTURE ROADWAY WESTBOUND CONDUIT LOCATIONS
SCALE AS NOTED

E-67

STATE OF CALIFORNIA - DEPARTMENT OF TRANSPORTATION
Caltrans

DESIGN OVERSIGHT: BEHZAD GOLEMOHAMMADI

CALCULATED/DESIGNED BY	KG	DATE 10/01	REVISED BY	DATE REVISED
CHECKED BY	AB	11/01		

FOR REDUCED PLANS ORIGINAL SCALE IS IN MILLIMETERS 0 20 40 60 80

DGN FILE =>$REQUEST
USERNAME =>$USER

CU 04251 | EA 0120F1

LAST REVISION 00-00-00

DIST	COUNTY	ROUTE	KILOMETER POST TOTAL PROJECT	SHEET No	TOTAL SHEETS
04	SF	80	13.2/13.9	133R1	1204

REGISTERED ELECTRICAL ENGINEER 12/19/02 DATE

12-6-04
PLANS APPROVAL DATE

REGISTERED PROFESSIONAL ENGINEER JENS ERLINGSSON No. 8249 EXP. 9/30/06 ELECTRICAL STATE OF CALIFORNIA

PB POWER, Inc.
A Parsons Brinckerhoff Company
303 Second St., Suite 700N
San Francisco, CA 94107-1317

The State of California or its officers or agents shall not be responsible for the accuracy or completeness of electronic copies of this plan sheet.

Caltrans now has a web site! To get to the web site, go to http://www.dot.ca.gov

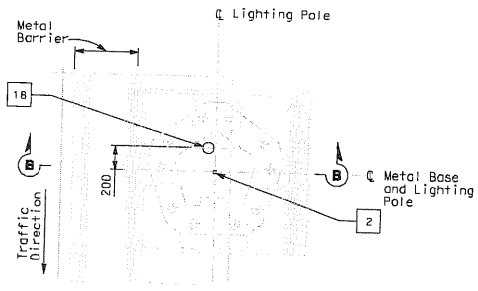

PLAN
CONDUIT STUB-UP PLAN FOR ROADWAY LIGHTING AND MVDS ON METAL BASE
SCALE 1:20

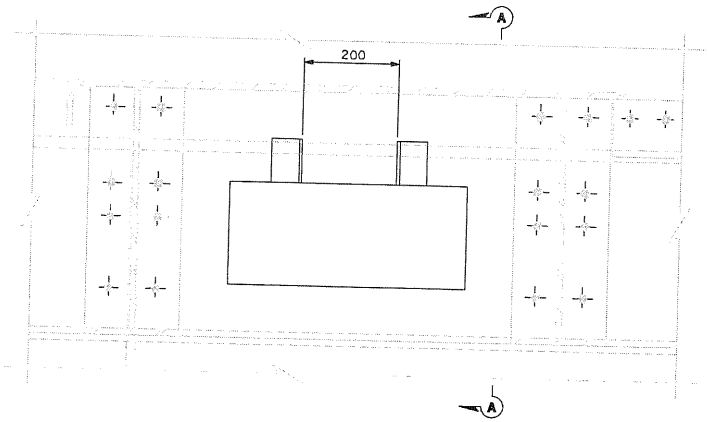

PLAN
PULL BOX IN STEEL BARRIER
SCALE 1:5

SHEET NOTES:

1. Bond grounding bushing to ground lug of lighting pole or overhead sign post with #6 bare copper wire.
2. Conduit shall clear all piping and pipe sleeves. Route conduit on top of deck plate, outside of girder box.
3. See Utility Detail No. 1 (Sheet No. 965 of 1204) for conduit penetration through girder plate and lighting pole metal base. The Contractor shall install sealant between the sleeve and conduit to prevent water or moisture from passing inside the sleeve.

NOTES:

1. References:
   - For installation and typical details of TOS equipment, see sheets E-344 thru E-357.
   - For pull box schedule, see sheet E-83.
   - For TOS field element locations, see sheet E-341.

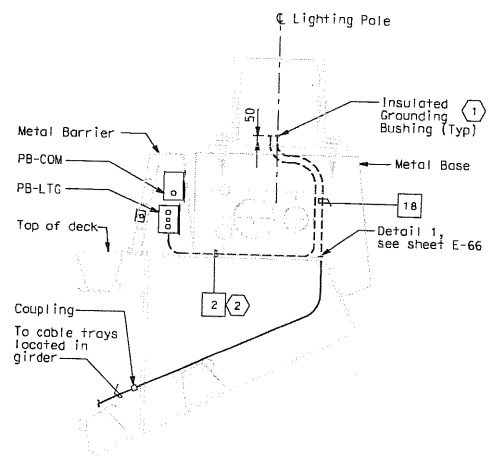

SECTION B-B
SCALE 1:20

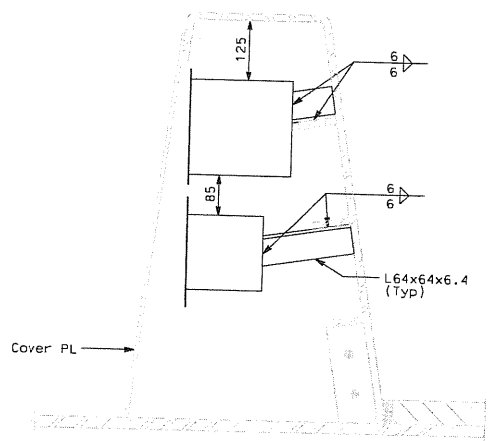

SECTION A-A
SCALE 1:5

MARK	DATE	DESCRIPTIONS	REV	CK	CCO NO.
1	10/16/06	Revised sheet notes.	LR	MG	11

REVISIONS

CONTRACT CHANGE ORDER NO. 11
SHEET 11 OF 13

DETAILS
SAS SUPERSTRUCTURE ROADWAY WESTBOUND CONDUIT LOCATIONS
SCALE AS NOTED

E-68

STATE OF CALIFORNIA - DEPARTMENT OF TRANSPORTATION
Caltrans

DESIGN OVERSIGHT: BEHZAD GOLEMOHAMMADI

CALCULATED/DESIGNED BY: KG — DATE 10/01 — REVISED BY
CHECKED BY: AB — DATE 11/01 — DATE REVISED

FOR REDUCED PLANS ORIGINAL SCALE IS IN MILLIMETERS 0 20 40 60 80

DGN FILE => $REQUEST
USERNAME => $USER

CU 04251 | EA 0120F1

LAST REVISION 00-00-00 | DATE PLOTTED => $DATE | TIME PLOTTED => $TIME

DIST	COUNTY	ROUTE	KILOMETER POST TOTAL PROJECT	SHEET No	TOTAL SHEETS
04	SF	80	13.2/13.9	208R1	1204

REGISTERED ELECTRICAL ENGINEER 12/19/02 DATE

12-6-04
PLANS APPROVAL DATE

PB POWER, Inc.
A Parsons Brinckerhoff Company
303 Second St., Suite 700N
San Francisco, CA 94107-1317

REGISTERED PROFESSIONAL ENGINEER JENS ERLINGSSON No. 8249 Exp. 9/30/06 ELECTRICAL STATE OF CALIFORNIA

The State of California or its officers or agents shall not be responsible for the accuracy or completeness of electronic copies of this plan sheet.

Caltrans now has a web site! To get to the web site, go to http://www.dot.ca.gov

Caltrans Metric

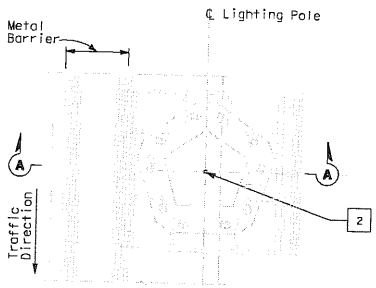

PLAN
TYPICAL CONDUIT STUB PLAN FOR ROADWAY LIGHTING ON A METAL BASE
SCALE 1:20

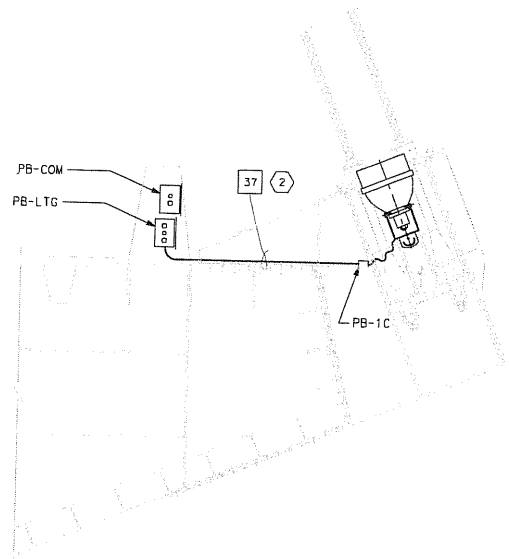

TYPICAL UPLIGHT CONDUIT LAYOUT
SCALE 1:20

SHEET NOTES:

1. Bond grounding bushing to ground lug of lighting pole with #6 bare copper wire.
2. Conduit shall be clear of all piping and pipe sleeves. Route conduit on top of deck plate, outside of girder box.
3. See Utility Detail No. 1 (Sheet No. 965 of 1204) for conduit penetration through girder plate and lighting pole metal base. The Contractor shall install sealant between the sleeve and conduit for future light pipe, plug and cap sleeve to prevent water or moisture from passing inside the sleeve. (1)

NOTES:

1. References:
   - For lighting pole schedule, see sheet E-168.
   - For location of pull boxes inside girder, see sheets E-181 thru E-186.
   - For luminaire support details, see structural sheets.

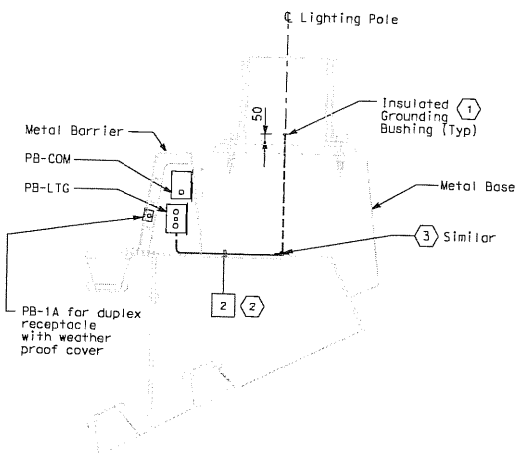

SECTION A-A
SCALE 1:20

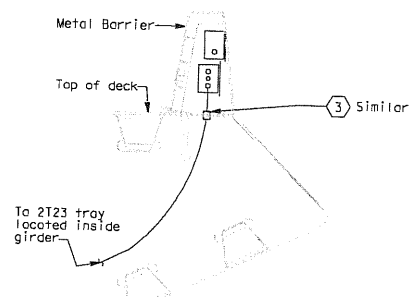

DETAIL 3
CONDUIT FOR FUTURE LIGHTPIPE CONNECTIONS ON A STEEL STRUCTURE
SCALE 1:20

MARK	DATE	DESCRIPTIONS	REV	CK	CCO NO.
1	10/16/06	Revised sheet notes.	LR	MG	11

REVISIONS

CONTRACT CHANGE ORDER NO. 11
SHEET 12 OF 13

DETAILS
SAS SUPERSTRUCTURE ROADWAY EASTBOUND CONDUIT LOCATIONS
SCALE AS NOTED

E-161

ALL DIMENSIONS ARE IN MILLIMETERS UNLESS OTHERWISE SHOWN.

FOR REDUCED PLANS ORIGINAL SCALE IS IN MILLIMETERS 0 20 40 60 80

DGN FILE => $REQUEST
USERNAME => $USER

CU 04251

EA 0420F20F4

LAST REVISION 00-00-00

STATE OF CALIFORNIA - DEPARTMENT OF TRANSPORTATION
Caltrans

DESIGN OVERSIGHT: BEHZAD GOLEMOHAMMADI

CALCULATED/ DESIGNED BY	CHECKED BY	DATE	REVISED BY	DATE REVISED
KG	AB	10/01		

DIST	COUNTY	ROUTE	KILOMETER POST TOTAL PROJECT	SHEET No.	TOTAL SHEETS
04	SF	80	13.2/13.9	233 R1	1204

REGISTERED ELECTRICAL ENGINEER 12/19/02 DATE

PLANS APPROVAL DATE

PB POWER, Inc.
A Parsons Brinckerhoff Company
303 Second St., Suite 700N
San Francisco, CA 94107-1317

REGISTERED PROFESSIONAL ENGINEER JENS ERLINGSSON No. 8249 Exp. 9/30/06 ELECTRICAL STATE OF CALIFORNIA

The State of California or its officers or agents shall not be responsible for the accuracy or completeness of electronic copies of this plan sheet.

Caltrans now has a web site! To get to the web site, go to http://www.dot.ca.gov

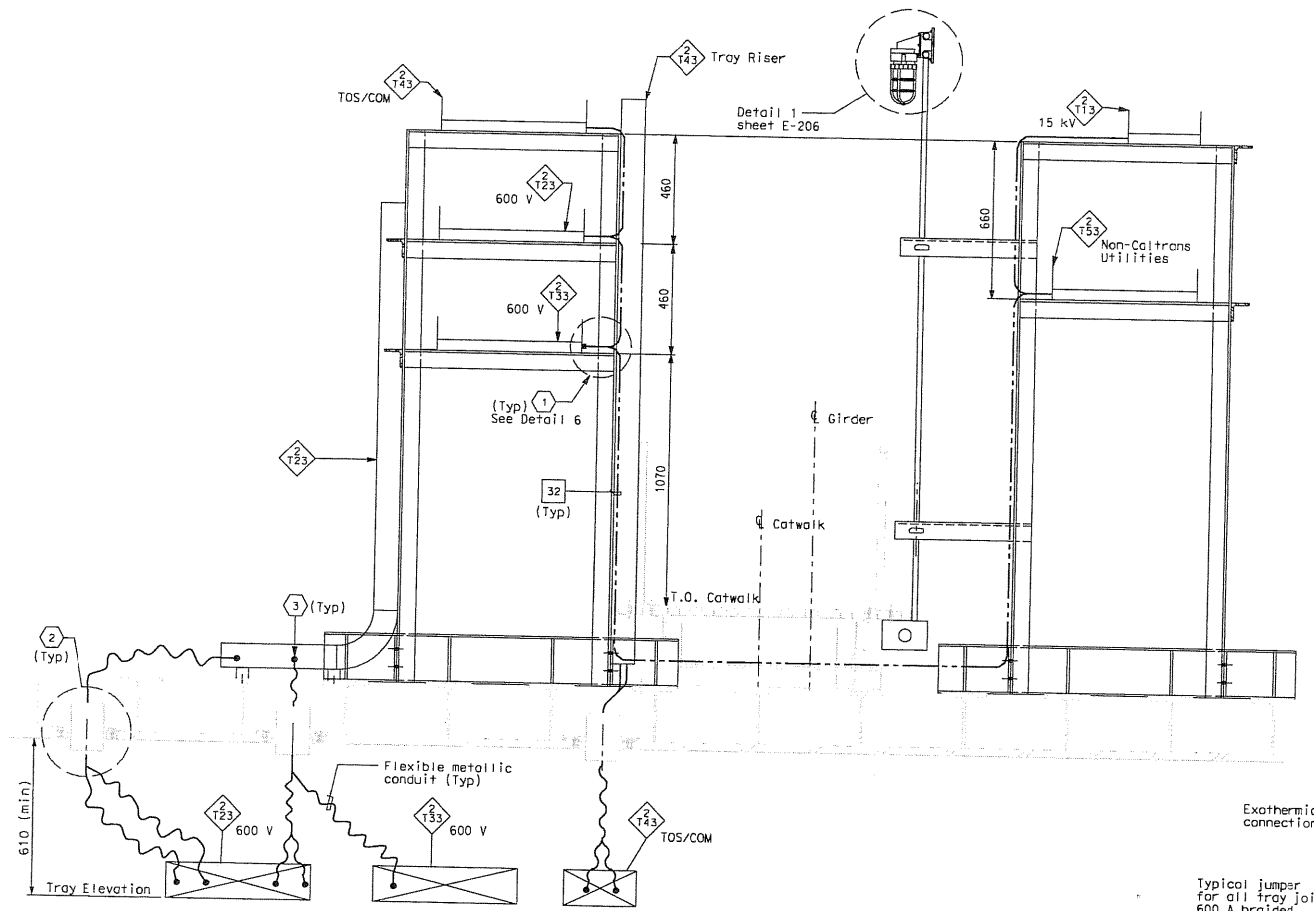

SECTION D-D - TYPICAL CABLE TRAY SUPPORT

SCALE: ':10

SHEET NOTES:

1. Provide connections to 500 kcmil system ground for all cable trays, every 200 meters.
2. For location of conduit penetrations thru girder plate, see Utility Detail No. 1 and Utility Layout sheets respectively. To prevent moisture from passing inside the sleeve, Contractor shall install sealant after conduit have been installed. Spares shall be plugged and capped.
3. Contractor shall provide hooked conduit support grips for each conduit or groups of conduits passing through the conduit penetrations. Contractor shall provide support for grips as needed.

NOTES:

1. See structural drawings for Catwalk Support Details.
2. For SAS Superstructure Girder access detail #2, see structural dwgs.
3. Ground cable shall be installed along full length of the 15 kV cable tray only. (1)
4. For typical cable tray support details, see AS-sheets.

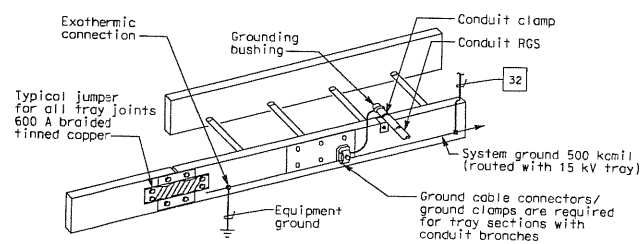

GROUNDING OF METALLIC RACEWAYS

DETAIL 6

MARK	DATE	DESCRIPTIONS	REV	CK	CCO NO.
1	1/10/06	Revised note. Bidder Inquiry #330.	CR	JE	11

REVISIONS

CONTRACT CHANGE ORDER NO. 11
SHEET 13 OF 13

DETAILS
SAS SUPERSTRUCTURE GIRDER EASTBOUND
TYPICAL CABLE TRAY AND GROUNDING INSTALLATION 2

SCALE AS NOTED

E-208

STATE OF CALIFORNIA - DEPARTMENT OF TRANSPORTATION
Caltrans

DESIGN OVERSIGHT: BEHZAD GOLEMOHAMMADI

CALCULATED/ DESIGNED BY	EDC	DATE 08/02	REVISED BY
CHECKED BY	CYF	3/04	DATE REVISED

ALL DIMENSIONS ARE IN MILLIMETERS UNLESS OTHERWISE SHOWN.

FOR REDUCED PLANS ORIGINAL SCALE IS IN MILLIMETERS 0 20 40 60 80

DGN FILE => $REQUEST
USERNAME => $USER

DATE PLOTTED => $DATE
TIME PLOTTED => $TIME

LAST REVISION 00-00-00

CU 04251 | EA 0120F1

STATE OF CALIFORNIA - DEPARTMENT OF TRANSPORTATION

CONTRACT CHANGE ORDER MEMORANDUM

TO: Peter Siegenthaler / Gary Pursell	FILE: E.A. 04 - 0120F4
FROM: Gary Pursell	CO-RTE-PM SF-80-13.2/13.9
	FED. NO.
CCO#: 11 SUPPLEMENT#: 0 Category Code: CXSA	CONTINGENCY BALANCE (incl. this change) $147,574,880.00
COST: $0.00 INCREASE ☐ DECREASE ☐	HEADQUARTERS APPROVAL REQUIRED? ☑ YES ☐ NO
SUPPLEMENTAL FUNDS PROVIDED: $0.00	IS THIS REQUEST IN ACCORDANCE WITH ENVIRONMENTAL DOCUMENTS? ☑ YES ☐ NO
CCO DESCRIPTION: Minor Civil Doc Corrections	**PROJECT DESCRIPTION:** CONSTRUCT SELF-ANCHORED SUSPENSION BRIDGE

Original Contract Time:	Time Adj. This Change:	Previously Approved CCO Time Adjustments:	Percentage Time Adjusted: (including this change)	Total # of Unreconciled Deferred Time CCO(s): (including this change)
2490 Day(s)	0 Day(s)	0 Day(s)	0 %	0

THIS CHANGE ORDER PROVIDES FOR:

Revising plan details and specifications identified prior to bid opening but based on direction from the Toll Bridge Program Oversight Committee an addendum was not issued and the changes were to be incorporated into the contract by change order post bid. This change order also provides for specification revisions identified after bid opening necessary to correct requirements to be consistent with the timeline goals of the project and the contract as a whole.

The contract plan changes are summarized as follows:

1. Eliminate Elevation Referencing at Matchlines and Correct Profile Line Elevation Discrepancies on Profile Plan Sheets

   It was noticed that on the profile plan sheets the matchline elevations do not match. It was determined the matchline elevations are not necessary on the drawings and will therefore be eliminated. Additionally some profile grade elevation discrepancies between "Road Plans" and "Structure Plans" were noticed and addressed here.

2. Revision to Electrical Manhole Plan Sheets

   In completing the design for the YBI Transition Structure underground duct bank design, changes to the depth of the duct banks were needed to accommodate elevation changes. As a result, a few dimensional changes will be required to manholes 25, 26 and 27.

3. Correct References on Plans Sheets

   Revise a Note on Electrical Sheets E-67, E-68 and E-161. Note 3 on these sheets referred to the wrong plan sheets elsewhere in the plans. This change corrects this typographical error.

4. Revision to Electrical Notation on Plan Sheet

   Revise Electrical Plan Sheet E-208 to clarify the location of the ground cable along the 15KVcable tray supports that was observed from Bidder Inquiry No. 330 that should have been in Addendum No. 8.

ADA Notice: For individuals with sensory disabilities, this document is available in alternate formats. For information call: (916) 654-6410 or TDD (916) 654-3880 or write Records and Forms Management, 1120 N Street, MS-89, Sacramento, CA 95814.

The specification changes are summarized as follows:

1. Special Provisions, Section 10-4.06 "Dehumidifier System"

   The specification has been revised to address coordination between the dehumidifier manufacturer and the Contractor's fabrication facility. Due to the size of the dehumidifiers, this equipment will have to be dismantled in order to fit into the tower assembly. This spec modification requires the equipment manufacturer to be involved in the fabricator's processes to make sure the equipment can be dismantled, rebuilt and tested prior to final acceptance. This spec also requires the Contractor to verify the routing of the ductwork to make sure there are no mechanical conflicts within the structure and to construct temporary supports as necessary in order to install the equipment.

2. Special Provisions Section 8-4.01, "Audits"

   The contract provides Critical Path Method (CPM) schedule and Accelerated Working Drawing specifications, which require that the Contractor submit working drawings early in the contract to avoid project delays. However, as written, Special Provisions Section 8-4.01, "Audits", is incompatible with said specifications in that it does not allow the Contractor to submit working drawings until after the Engineer has completed a Department audit of the fabrication facility in question. This proposed change provides for the submittal of working drawings before a Department fabrication audit is completed. The proposed change will allow, on a case-by-case basis as approved by the Engineer, the working drawings to be submitted concurrently while completing the Department fabrication audits. The proposed change benefits the Department and project because it significantly mitigates the risk of Department delay and associated costs resulting from potential design changes. No contract time adjustment is warranted as a result of this proposed change for the following reasons. The working drawing submittal provisions of Section 8-4.01 are incompatible with the number of working days specified in the contract. The contract provides that prospective bidders may request a fabrication audit prior to bid opening, but does not necessitate it. Prospective fabricators were at various stages of the fabrication audit process at the time of contract award. During the pre-award qualification review, the Contractor indicated that it intended to secure the services of fabricator ZPMC in Shanghai, China, to perform the majority of steel fabrication work. ZPMC did not (nor was it contractually required to) possess a completed Department fabrication audit at the time of contract award. Application of the Section 8-1.04 working drawing submittal provisions to a fabricator not audited (e.g., ZPMC) at the time of award 1) adds considerable Department schedule risk and associated cost because of potential delays resulting from design changes that, if not for the offending Section 8-1.04 provision, would be identified much earlier in the working drawing review process and 2) introduces a delay of one year or more to the project schedule -- as ZPMC's structural steel fabrication shop is being developed for the project, the Department audit cannot be completed until all components are in-place and all elements of the audit are satisfied, which is approximately one year in the future. The status of pre-bid fabrication audits was known by the Department at the time of contract award. Awarding the contract in recognition of the following information effectively nullified the incompatible early working drawing submittal prohibition because the Department was aware of the following information at the time of contract award: 1) The pre-bid Department fabrication audit status of prospective fabricators, 2) a Department pre-bid audit was not required of all prospective fabricators prior to award, 3) During the pre-award qualification review, the Contractor indicated that it intended to secure the services of a fabricator that had not yet completed a Department audit, and 4) With respect to fabricators without a completed Department audit prior to award, the working drawing submittal specification is incompatible with the contract working days specified. Additionally, the Contractor's bid and baseline CPM schedule recognized this incompatibility and reasonably assumed the submittal of working drawings before a completed fabrication audit.

3. Section 10-1.17 "Accelerated Working Drawing Submittal"

   Similar to No. 2 above, this specification does not allow the approval of any structural steel or cable working drawings until after the Engineer has approved the preliminary erection plan and weight control procedures. Due to time limits imposed by the aggressive construction schedule, most if not all of the preparation for working drawings related to structural steel have to be started early, and require an iterative process of preparation and review by the contractor, their subcontractors and suppliers. In some cases a final approval by the State for certain submittals is prudent and correct prior to having finalized the loading conditions and erection plans. Although it is anticipated preliminary erection plans and weight control procedures will indeed be approved prior to working drawings, the proposed specification change will allow an exception for critical submittals not affected by the erection plan and loading conditions. This change will help prevent unnecessary delays, and provides the Engineer appropriate flexibility to take necessary action, when appropriate.

ADA Notice: For individuals with sensory disabilities, this document is available in alternate formats. For information call: (916) 654-6410 or TDD (916) 654-3880 or write Records and Forms Management, 1120 N Street, MS-89, Sacramento, CA 95814.

4. Special Provisions Section 5-1.25, "Payments"

This specification requires the Contractor to furnish an advance payment bond to secure the value of materials on hand (MOH) payments for any material stored outside the United States. The specification further provides that the value of the bond cannot be adjusted more than once a year. It will be extremely difficult to forecast the value of MOH outside the United States one-year in advance, and with being unable to adjust the value of the bond, this will result in a bonding capacity that may not reflect actual field conditions. Since the Contractor will have to bond for the worst-case scenario, this will result in a higher bond value. Any potential delays to the project will cause the Contractor to pursue additional bonding costs towards the Department as well. On the other hand, should the Contractor inadvertently under-bond the value of the MOH, or if the State caused a delay to field erection for example, and the value of the MOH exceeds the bonded amount, the State would be unable to make the higher MOH payments, which is the very objective of this specification unique to the SAS contract. The proposed specification change allows more frequent adjustments of the value of the bond, anticipated at one to four times a year with the approval of the Engineer, which will enable the Contractor to provide advanced payment bonds representative of the actual value of the MOH payments. This will better secure payments for all parties, and will allow MOH payments to be made as anticipated by the contract and reduce the exposure to the Department on elevated bonding costs in the event of project delays.

5. Special Provisions Section 10-1.49 "Tower Cross Bracing Spherical Bushing Bearing"

This specification requires that working drawings for the Tower Cross Bracing Spherical Bushing Bearing be signed by an engineer registered in the United States, and further that the engineer be a full-time employee of the bearing manufacturer. The Contractor has selected Lubrite Technologies, a premier bearing manufacturer and the firm of choice by the Department's design team. However, Lubrite does not employ a full-time registered engineer. Based on this information, it is apparent the full-time requirement is impractical and therefore it proposed to be deleted from the contract. The requirement that an engineer registered in the United States sign the working drawings will remain.

The changes shown in this change order are incidental and it is understood with the Contractor that this will be no cost change. Specification Changes Nos. 2 thru 5 have been discussed in periodic core management team meetings with the Contractor and Caltrans' management team recommends the specification changes be approved.

No time adjustment is warranted, as this change order does not affect the controlling operation. Design concurrence has been acquired for this change order. Maintenance concurrence is not required, for most of the changes are constructability issues and the changes in the plans are minor clarifications. This change order received HQ Issue and Approve on 11/28/2006.

CONCURRED BY:		
Construction Engineer:	Gary Pursell	Date 10/31/06
Bridge Engineer:		Date
Project Engineer:	Proj. Eng, Jing Z Chen	Date 9/15/06
Project Manager:	TB Program Man, Tony Anziano	Date
FHWA Rep.:		Date
Environmental:		Date
Other (specify):	PB Design Consult, Mark Grodski	Date 10/26/06
Other (specify):	PCE, Pete Siegenthaler	Date 10/31/06
District Prior Approval By:	HQ Coord., Rob Kobal	Date 10/25/06
HQ (Issue Approve) By:	HQ I&A, Ken Darby	Date 11/28/06
Resident Engineer's Signature:	Gary Pursell 12/6/06	Date

ESTIMATE OF COST

	THIS REQUEST	TOTAL TO DATE
ITEMS	$0.00	$0.00
FORCE ACCOUNT	$0.00	$0.00
AGREED PRICE	$0.00	$0.00
ADJUSTMENT	$0.00	$0.00
TOTAL	$0.00	$0.00

FEDERAL PARTICIPATION

☐ PARTICIPATING ☐ PARTICIPATING IN PART ☑ NONE
☐ NON-PARTICIPATING (MAINTENANCE) ☐ NON-PARTICIPATING

FEDERAL SEGREGATION (if more than one Funding Source or P.I.P. type)
☑ CCO FUNDED PER CONTRACT ☐ CCO FUNDED AS FOLLOWS

FEDERAL FUNDING SOURCE	PERCENT

ADA Notice: For individuals with sensory disabilities, this document is available in alternate formats. For information call: (916) 654-6410 or TDD (916) 654-3880 or write Records and Forms Management, 1120 N Street, MS-89, Sacramento, CA 95814.

CONTRACT CHANGE ORDER

Change Requested by: Engineer

CCO: 12	Suppl. No. 0	Contract No. 04- 0120F4	Road SF-80-13.2/13.9	FED. AID LOC.:

To: AMERICAN BRIDGE/FLUOR ENTERPRISES INC A JOINT VENTURE

You are directed to make the following changes from the plans and specifications or do the following described work not included in the plans and specifications for this contract. ***NOTE: This change order is not effective until approved by the Engineer.***

Description of work to be done, estimate of quantities and prices to be paid. (Segregate between additional work at contract price, agreed price and force account.) Unless otherwise stated, rates for rental of equipment cover only such time as equipment is actually used and no allowance will be made for idle time. This last percentage shown is the net accumulated increase or decrease from the original quantity in the Engineer's Estimate.

Extra Work at Force Account:

Provide the necessary Access Control Measures in accordance with Section 5-1.27, "PHOTO ID SYSTEM" of the Special Provisions as authorized by the Engineer.

Labor, equipment and material approved by the Engineer, as necessary will be paid in accordance with the provisions of Section 4-1.03D, "Extra Work" of the Standard Specifications and Section 5-1.24, "Force Account Payment" of the Special Provisions.

Estimated cost of Extra Work at Force Account $500,000.00

Estimated Cost: Increase ☑ Decrease ☐ $500,000.00

By reason of this order the time of completion will be adjusted as follows: 0 days

Submitted by

Signature Gary Pursell	**Resident Engineer:** Gary Pursell	Date 9/28/06

Approval Recommended by

Signature Gary Pursell	**Construction Engineer:** Gary Pursell	Date 9/28/06

Engineer Approval by

Signature P. Siegenthaler	**(Print name and title)** PETER SIEGENTHALER - Chief	Date 10/3/06

We the undersigned contractor, have given careful consideration to the change proposed and agree, if this proposal is approved, that we will provide all equipment, furnish the materials, except as may otherwise be noted above, and perform all services necessary for the work above specified, and will accept as full payment therefor the prices shown above.

NOTE: If you, the contractor, do not sign acceptance of this order, your attention is directed to the requirements of the specifications as to proceeding with the ordered work and filing a written protest within the time therein specified.

Contractor Acceptance by

Signature Michael D. Flowers	**(Print name and title)** Michael D. Flowers Project Director	Date 9.28.06

STATE OF CALIFORNIA - DEPARTMENT OF TRANSPORTATION

CONTRACT CHANGE ORDER MEMORANDUM

TO: PETER SIEGENTHALER / Gary Pursell	FILE: E.A. 04 - 0120F4
FROM: Gary Pursell	CO-RTE-PM SF-80-13.2/13.9
	FED. NO.
CCO#: 12 SUPPLEMENT#: 0 Category Code: AWZZ	CONTINGENCY BALANCE (incl. this change) $147,449,880.00
COST: $500,000.00 INCREASE ☑ DECREASE ☐	HEADQUARTERS APPROVAL REQUIRED? ☑ YES ☐ NO
SUPPLEMENTAL FUNDS PROVIDED: $53,800.00	IS THIS REQUEST IN ACCORDANCE WITH ENVIRONMENTAL DOCUMENTS? ☑ YES ☐ NO
CCO DESCRIPTION: Access Control Measures Photo ID System	**PROJECT DESCRIPTION:** CONSTRUCT SELF-ANCHORED SUSPENSION BRIDGE

LOCATION: IN SAN FRANCISCO COUNTY IN SAN FRANCISCO FROM 0.6 KM TO 1.3 KM EAST OF THE YERBA BUENA TUNNEL EAST PORTAL

THIS CHANGE ORDER PROVIDES FOR:

Providing the necessary Access Control Measures as shown in Section 5-1.27, "PHOTO ID SYSTEM" of the Special Provisions and as authorized by the Engineer. The Contractor will provide 24-hour security, including weekends and holidays, at the southern gate on the Caltrans Maintenance road, which is not part of the original contract documents. This change order is also written to include any additional security measures as the Engineer deems necessary.

This change is necessary to provide security measures to control access along the Caltrans Maintenance road to protect the SFOBB eastern touchdown and the leased area around the construction trailers. Only personnel with proper photo identification will be allowed to enter the job site. The Contractor will coordinate with the other upcoming projects. Posting of additional security guards and measures to monitor the job site are due to the heightened homeland security measures since September, 11, 2001.

Labor, equipment and material approved by the Engineer, for the above work will be paid in accordance with the provisions of Section 5-1.24, "Force Account Payment" of the Special Provisions and Section 4-1.03D, "Extra Work", of the Standard Specifications.

This work is not covered by any contract items. Therefore, payment for this work will be at Extra Work at Force Account for an estimated cost of $500,000.00, which can be financed from the contingency fund, of which $53,800.00 of supplemental funds were allotted for this work.

No time adjustment is warranted as this change order does not affect the controlling operation.

Received concurrence from Project Manager, Ken Terpstra, on October 3, 2006. Maintenance concurrence is not needed for this change order since this change is addressed in the supplemental funds and is temporary in nature.

This change order received Headquarters I&A from Ken Darby on Sept. 21, 2006. A copy is attached for your reference.

CONCURRED BY:

Construction Engineer:	Gary Pursell	Date 9/20/2006
Bridge Engineer:		Date
FHWA Representative:		Date
Project Engineer:		Date
Other (specify):	Pete Siegenthaler, Principal CE	Date 9/20/2006
	Rob Kobal, HQ Const Coord	Date 9/20/2006
	Ken Terpstra, PM	Date 10/3/2006
District Prior Approval By:		Date
(Issue Approve) By:	HQ I&A - Ken Darby	Date 9/21/2006
Resident Engineer's Signature:	Gary Pursell	Date 10/3/06

ESTIMATE OF COST

	THIS REQUEST	TOTAL TO DATE
ITEMS	$0.00	$0.00
FORCE ACCOUNT	$500,000.00	$500,000.00
AGREED PRICE	$0.00	$0.00
ADJUSTMENT	$0.00	$0.00
TOTAL	$500,000.00	$500,000.00

FEDERAL PARTICIPATION

☐ PARTICIPATING ☐ PARTICIPATING IN PART ☑ NONE
☐ NON-PARTICIPATING (MAINTENANCE) ☐ NON-PARTICIPATING

FEDERAL SEGREGATION (if more than one Funding Source or P.I.P. type)
☑ CCO FUNDED PER CONTRACT ☐ CCO FUNDED AS FOLLOWS

FEDERAL FUNDING SOURCE	PERCENT

STATE OF CALIFORNIA - DEPARTMENT OF TRANSPORTATION

CONTRACT CHANGE ORDER

Change Requested by: Engineer

CCO: 12 **Suppl. No. 1** **Contract No. 04 – 0120F4** **Road** SF-80-13.2/13.9 **FED. AID LOC.:**

To: **AMERICAN BRIDGE/FLUOR ENTERPRISES INC A JOINT VENTURE**

You are directed to make the following changes from the plans and specifications or do the following described work not included in the plans and specifications for this contract. ***NOTE: This change order is not effective until approved by the Engineer.***

Description of work to be done, estimate of quantities and prices to be paid. (Segregate between additional work at contract price, agreed price and force account.) Unless otherwise stated, rates for rental of equipment cover only such time as equipment is actually used and no allowance will be made for idle time. This last percentage shown is the net accumulated increase or decrease from the original quantity in the Engineer's Estimate.

Extra Work at Force Account:

Provide additional funds.

Labor, equipment and material authorized by the Engineer, as necessary, will be paid in accordance with the provisions of Section 4-1.03D, "Extra Work" of the Standard Specifications and Section 5-1.24, "Force Account Payment" of the Special Provisions.

Estimated Cost of Extra Work at Force Account.....$450,000.00

Estimated Cost: Increase ☒ Decrease ☐ $450,000.00

By reason of this order the time of completion will be adjusted as follows: 0 Days

Submitted by

Signature Kannu Balan	**Resident Engineer** Kannu Balan, Senior T.E.	**Date** 7-19-11

Approval Recommended by

Signature Pete Siegenthaler	**Principal Transportation Engineer** Peter Siegenthaler, Prin. T.E.	**Date** 7-19-11

Engineer Approval by

Signature Bill Casey Acting CM For	**Principal Transportation Engineer** Peter Siegenthaler, Prin. T.E.	**Date** 7-26-11

We the undersigned contractor, have given careful consideration to the change proposed and agree, if this proposal is approved, that we will provide all equipment, furnish the materials, except as otherwise be noted above, and perform all services necessary for the work above specified, and will accept as full payment therefor the prices shown above.

NOTE: If you, the contractor, do not sign acceptance of this order, your attention is directed to the requirements of the specifications as to proceeding with the ordered work and filing a written protest within the time therein specified.

Contractor Acceptance by

Signature	(Print name and title) BRIAN A. PETERSEN - PROJECT DIRECTOR	**Date** 25JUL11

STATE OF CALIFORNIA - DEPARTMENT OF TRANSPORTATION

CONTRACT CHANGE ORDER MEMORANDUM

TO: Pete Siegenthaler, Prin TE /	FILE: E.A. 04 - 0120F4
FROM: Kannu Balan, Senior TE	CO-RTE-PM SF-80-13.2/13.9
	FED. NO.
CCO#: 12 SUPPLEMENT#: 1 Category Code: AWZZ	CONTINGENCY BALANCE (incl. this change) $166,983,995.11
COST: $450,000.00 INCREASE ☑ DECREASE ☐	HEADQUARTERS APPROVAL REQUIRED? ☑ YES ☐ NO
SUPPLEMENTAL FUNDS PROVIDED: $0.00	IS THIS REQUEST IN ACCORDANCE WITH ENVIRONMENTAL DOCUMENTS? ☑ YES ☐ NO
CCO DESCRIPTION: Additional Funds Access Control Measures	**PROJECT DESCRIPTION:** CONSTRUCT SELF-ANCHORED SUSPENSION BRIDGE

Original Contract Time:	Time Adj. This Change:	Previously Approved CCO Time Adjustments:	Percentage Time Adjusted: (including this change)	Total # of Unreconciled Deferred Time CCO(s): (including this change)
2490 Day(s)	0 Day(s)	501 Day(s)	20 %	2

THIS CHANGE ORDER PROVIDES FOR:

Providing additional funds for Access Control Measures as shown in Special Provisions Section 5-1.27 "Photo ID System" and as directed by the Engineer.

This supplement will provide funding to continue security measures along the access road, the SFOBB eastern touchdown, YBITS W2 area, and the Pier 7 campus. This change order covers the remainder of the expected cost until contract completion in 2014.

This work will be paid as extra work at force account and the Department estimates it to total $450,000.00, which can be financed from the contingency fund. A detailed cost analysis is on file. The cumulative total of CCO 12S0 and CCO 12S1 is $950,000.00, which $53,800.00 can be financed from supplemental funds and the remaining $896,200.00 from the contingency fund.

No time adjustment is warranted as this change order does not affect the controlling operation.

This change order has concurrence from Peter Siegenthaler (Principal TE), Rich Foley (HQ Oversight), and Ken Terpstra (Proj. Manager).

The Resident Engineer requests Headquarters CCO Desk "Issue and Approve".

CONCURRED BY:			
Construction Engineer:	PCE, Pete Siegenthaler, Prin TE	Date	7/7/11
Bridge Engineer:		Date	
Project Engineer:		Date	
Project Manager:	Proj Manager, Ken Terpstra	Date	7/18/11
FHWA Rep.:		Date	
Environmental:		Date	
Other (specify):	HQ, Rich Foley	Date	7/7/11
Other (specify):		Date	
District Prior Approval By:		Date	
HQ (Issue Approve) By:		Date	
Resident Engineer's Signature: Kannu Balan		Date	7-19-11

ESTIMATE OF COST

	THIS REQUEST	TOTAL TO DATE
ITEMS	$0.00	$0.00
FORCE ACCOUNT	$450,000.00	$950,000.00
AGREED PRICE	$0.00	$0.00
ADJUSTMENT	$0.00	$0.00
TOTAL	$450,000.00	$950,000.00

FEDERAL PARTICIPATION

☐ PARTICIPATING ☐ PARTICIPATING IN PART ☑ NONE
☐ NON-PARTICIPATING (MAINTENANCE) ☐ NON-PARTICIPATING

FEDERAL SEGREGATION (if more than one Funding Source or P.I.P. type)
☐ CCO FUNDED PER CONTRACT ☐ CCO FUNDED AS FOLLOWS

FEDERAL FUNDING SOURCE	PERCENT

ADA Notice: For individuals with sensory disabilities, this document is available in alternate formats. For information call: (916) 654-6410 or TDD (916) 654-3880 or write Records and Forms Management, 1120 N Street, MS-89, Sacramento, CA 95814.

CONTRACT CHANGE ORDER

Change Requested by: Engineer

CCO: 13	Suppl. No. 0	Contract No. 04 - 0120F4	Road SF-80-13.2/13.9	FED. AID LOC.:

To: **AMERICAN BRIDGE/FLUOR ENTERPRISES INC A JOINT VENTURE**

You are directed to make the following changes from the plans and specifications or do the following described work not included in the plans and specifications for this contract. ***NOTE: This change order is not effective until approved by the Engineer.***

Description of work to be done, estimate of quantities and prices to be paid. (Segregate between additional work at contract price, agreed price and force account.) Unless otherwise stated, rates for rental of equipment cover only such time as equipment is actually used and no allowance will be made for idle time. This last percentage shown is the net accumulated increase or decrease from the original quantity in the Engineer's Estimate.

Extra Work at Force Account:

In accordance with Section 5-1.28, "GENERAL MIGRATORY BIRD PROTECTION" of the Contract Special Provisions, perform nesting prevention measures as authorized by the Engineer.

Labor, equipment and material approved by the Engineer, as necessary will be paid in accordance with the provisions of Section 4-1.03D, "Extra Work" of the Standard Specifications and Section 5-1.24, "Force Account Payment" of the Special Provisions.

A delay to the controlling item due to migratory birds or their nests will be considered a temporary suspension of work in accordance with the provisions in Section 8-1.05, "Temporary Suspension of Work," of the Standard Specifications. Adjustments will be made for delays that the Engineer determines are not due to the Contractor's failure to perform the provision of the contract in the same manner as for suspensions due to unsuitable weather in Section 8-1.05. If the Engineer determines that an adjustment in contract time is warranted, then an adjustment in contract time will be implemented by a Supplement to this Change Order.

Estimated cost of Extra Work at Force Account $50,000.00

Estimated Cost: **Increase** ☑ **Decrease** ☐ **$50,000.00**

By reason of this order the time of completion will be adjusted as follows: 0 days

Submitted by

Signature	Resident Engineer: Gary Pursell	Date 9/28/06

Approval Recommended by

Signature	Construction Engineer: Gary Pursell	Date 9/28/06

Engineer Approval by

Signature	(Print name and title) Gary Pursell - Construction Engineer	Date 9/28/06

We the undersigned contractor, have given careful consideration to the change proposed and agree, if this proposal is approved, that we will provide all equipment, furnish the materials, except as may otherwise be noted above, and perform all services necessary for the work above specified, and will accept as full payment therefor the prices shown above.

NOTE: If you, the contractor, do not sign acceptance of this order, your attention is directed to the requirements of the specifications as to proceeding with the ordered work and filing a written protest within the time therein specified.

Contractor Acceptance by

Signature	(Print name and title) Michael D. Flowers Project Director	Date 9.28.06

STATE OF CALIFORNIA - DEPARTMENT OF TRANSPORTATION

CONTRACT CHANGE ORDER MEMORANDUM

DATE: 8/9/2006

TO: PETER SIEGENTHALER / Gary Pursell	FILE: E.A. 04 - 0120F4
FROM: Gary Pursell	CO-RTE-PM SF-80-13.2/13.9
	FED. NO.
CCO#: 13 SUPPLEMENT#: 0 Category Code: CXSA	CONTINGENCY BALANCE (incl. this change) $147,449,880.00
COST: $50,000.00 INCREASE ☑ DECREASE ☐	HEADQUARTERS APPROVAL REQUIRED? ☐ YES ☑ NO
SUPPLEMENTAL FUNDS PROVIDED: $0.00	IS THIS REQUEST IN ACCORDANCE WITH ENVIRONMENTAL DOCUMENTS? ☑ YES ☐ NO
CCO DESCRIPTION: Nesting Prevention Measures	**PROJECT DESCRIPTION:** CONSTRUCT SELF-ANCHORED SUSPENSION BRIDGE

LOCATION: IN SAN FRANCISCO COUNTY IN SAN FRANCISCO FROM 0.6 KM TO 1.3 KM EAST OF THE YERBA BUENA TUNNEL EAST PORTAL

THIS CHANGE ORDER PROVIDES FOR:

Performing nesting prevention measures in accordance with Section 5-1.28, "GENERAL MIGRATORY BIRD PROTECTION" of the Contract Special Provisions, and as authorized by the Engineer.

The Special Provisions state that the Contractor shall use exclusion devices or remove and dispose of partially constructed and unoccupied nests of migratory birds on a regular basis to prevent their occupation and this is to be paid for as Extra Work. Failure to prevent the nesting of birds on the structures can result in a potential delay to the project.

Labor, equipment and material approved by the Engineer, as necessary will be paid in accordance with the provisions of Section 5-1.24, "Force Account Payment" of the Special Provisions. This work is not covered by any contract items. Therefore, payment for this work will be at Extra Work at Force Account for an estimated cost of $50,000.00, which can be financed from the contingency fund.

This change order has been written as a no-time adjusted change order. However, the change order states (via the Special Provisions of the Contract), that if it has been found there is a delay to the controlling item due to migratory birds or their nests, this delay will be considered a temporary suspension of work in accordance with the provisions in Section 8-1.05, "Temporary Suspension of Work," of the Standard Specifications. The Specials also state that adjustments will be made for delays that the Engineer determines are not due to the Contractor's failure to perform the provision of the contract in the same manner as for suspensions due to unsuitable weather in Section 8-1.05. If the Engineer determines that an adjustment is contract time is warranted, then an adjustment in contract time will be implemented by a Supplement to this Change Order.

Design and Maintenance concurrence are not needed for this change order, for this change order is required under the Special Provisions associated with this project. This change order was field approved by the Resident Engineer on Sept. 28, 2006.

CONCURRED BY:

Construction Engineer:	Gary Pursell	Date 9/28/2006
Bridge Engineer:		Date
FHWA Representative:		Date
Project Engineer:		Date
Other (specify):		Date
		Date
		Date
District Prior Approval By:		Date
HQ (Issue Approve) By:		Date
Resident Engineer's Signature:	Gary Pursell	Date 9/28/06

ESTIMATE OF COST

	THIS REQUEST	TOTAL TO DATE
ITEMS	$0.00	$0.00
FORCE ACCOUNT	$50,000.00	$50,000.00
AGREED PRICE	$0.00	$0.00
ADJUSTMENT	$0.00	$0.00
TOTAL	$50,000.00	$50,000.00

FEDERAL PARTICIPATION

☐ PARTICIPATING ☐ PARTICIPATING IN PART ☑ NONE
☐ NON-PARTICIPATING (MAINTENANCE) ☐ NON-PARTICIPATING

FEDERAL SEGREGATION (if more than one Funding Source or P.I.P. type)
☑ CCO FUNDED PER CONTRACT ☐ CCO FUNDED AS FOLLOWS

FEDERAL FUNDING SOURCE	PERCENT

STATE OF CALIFORNIA - DEPARTMENT OF TRANSPORTATION

CONTRACT CHANGE ORDER MEMORANDUM

TO: Peter Siegenthaler, Const Mgr / Gary Pursell, P.E., Sup.T.E.	FILE: **E.A.** 04 - 0120F4
FROM: Gary Pursell, P.E., Sup.T.E.	**CO-RTE-PM** SF-80-13.2/13.9
	FED. NO.
CCO#: **14** SUPPLEMENT#: **0** Category Code: **CAXX**	CONTINGENCY BALANCE (incl. this change) **$145,949,880.00**
COST: **$1,800,000.00** INCREASE ☑ DECREASE ☐	HEADQUARTERS APPROVAL REQUIRED? ☑ YES ☐ NO
SUPPLEMENTAL FUNDS PROVIDED: **$0.00**	IS THIS REQUEST IN ACCORDANCE WITH ENVIRONMENTAL DOCUMENTS? ☑ YES ☐ NO
CCO DESCRIPTION: Pier 7 Campus (Additional Facilities)	**PROJECT DESCRIPTION:** CONSTRUCT SELF-ANCHORED SUSPENSION BRIDGE

Original Contract Time:	Time Adj. This Change:	Previously Approved CCO Time Adjustments:	Percentage Time Adjusted: (including this change)	Total # of Unreconciled Deferred Time CCO(s): (including this change)
2490 Day(s)	**0** Day(s)	**30** Day(s)	**1** %	**0**

THIS CHANGE ORDER PROVIDES FOR:

Set-up temporary office facilities on Pier 7 (off Burma Road) for joint-use by the Department's engineering staff and Contractor's staff during the construction of the self-anchored suspension bridge and new east span SFOBB.

These joint facilities will be used for joint technical problem solving, corridor scheduling sessions and timely communication between all essential parties on the SFOBB corridor projects. Due to the requirements for global communications 24hrs a day, 7days a week, a facility with tele- and video-conferencing capabilities is required to allow on-demand and real-time communications to discuss scheduling, fabrication, working drawings, construction issues and potential changes. At any one time these dialogs will include the contractor, suppliers and fabricators, Department employees from construction, design and maintenance. The joint facility will also be used for weekly meetings with the Department's partners, including the Project Management Team.

In 2001, the Toll Bridge Seismic Retrofit Program set up field facilities at Pier 7 for the purpose of co-locating all engineering and administrative staff for the contractor and the Department. This was expanded to include joint work space, as in "Mission Control" for the Skyway contract (012024), the "Working Drawing Campus" for the SAS contract (0120F4) and similar to the field office facilities included in the Devil's Slide contract (1123U4).

The Bay Bridge contracts now include international participation, which present a number of logistical challenges to ensure timely communication between all the stakeholders for this project. The necessary communication covers many time zones, between parties located in the United States, Canada, China, Japan, South Korea, and England. Therefore, it is now necessary to set up the appropriate facilities in order to deliver the project in a timely manner.

This work is not covered by any contract items. Therefore, payment for this work will be at Extra Work at Force Account for an estimated cost of $1,800,000, which can be financed from the contingency fund. A cost analysis is on file in the project records.

No time adjustment is warranted, as this change order does not affect the controlling operation.

This change has received concurrence from Principal Construction Manager, Pete Siegenthaler (10/27/2006), HQ, Jon Tapping (10/27/2006), Toll Bridge Manager Tony Anziano on 11/14/06, and Project Manager, Ken Terpstra on 11/14/06.

This change order received an HQ Issue & Approve on 11/8/2006. A copy is attached for reference.

This change order received TBPOC approval on 12/21/06.

ADA Notice: For individuals with sensory disabilities, this document is available in alternate formats. For information call: (916) 654-6410 or TDD (916) 654-3880 or write Records and Forms Management, 1120 N Street, MS-89, Sacramento, CA 95814.

CONCURRED BY:		
Construction Engineer:	Gary Pursell	Date 10/27/06
Bridge Engineer:		Date
Project Engineer:	Proj. Man, Ken Terpstra	Date 11/14/06
Project Manager:	TB Program Man, Tony Anziano	Date 11/14/06
FHWA Rep.:	TBPOC	Date 12/21/06
Environmental:	HQ, Rob Kobal	Date 10/26/06
Other (specify):	PCE, Pete Siegenthaler	Date 10/27/06
Other (specify):	HQ, Jon Tapping	Date 10/27/06
District Prior Approval By:		Date
HQ (Issue Approve) By:	Ken Darby	Date 11/8/06
Resident Engineer's Signature:	Gary Pursell 1/17/07	Date

ESTIMATE OF COST

	THIS REQUEST	TOTAL TO DATE
ITEMS	$0.00	$0.00
FORCE ACCOUNT	$1,800,000.00	$1,800,000.00
AGREED PRICE	$0.00	$0.00
ADJUSTMENT	$0.00	$0.00
TOTAL	$1,800,000.00	$1,800,000.00

FEDERAL PARTICIPATION

☐ PARTICIPATING ☐ PARTICIPATING IN PART ☑ NONE
☐ NON-PARTICIPATING (MAINTENANCE) ☐ NON-PARTICIPATING

FEDERAL SEGREGATION (if more than one Funding Source or P.I.P. type)
☑ CCO FUNDED PER CONTRACT ☐ CCO FUNDED AS FOLLOWS

FEDERAL FUNDING SOURCE	PERCENT

ADA Notice: For individuals with sensory disabilities, this document is available in alternate formats. For information call: (916) 654-6410 or TDD (916) 654-3880 or write Records and Forms Management, 1120 N Street, MS-89, Sacramento, CA 95814.

STATE OF CALIFORNIA - DEPARTMENT OF TRANSPORTATION

CONTRACT CHANGE ORDER

Change Requested by: Engineer

CCO: 14	Suppl. No. 0	Contract No. 04 - 0120F4	Road SF-80-13.2/13.9	FED. AID LOC.:

To: **AMERICAN BRIDGE/FLUOR ENTERPRISES INC A JOINT VENT**

You are directed to make the following changes from the plans and specifications or do the following described work not included in the plans and specifications for this contract. ***NOTE: This change order is not effective until approved by the Engineer.***

Description of work to be done, estimate of quantities and prices to be paid. (Segregate between additional work at contract price, agreed price and force account.) Unless otherwise stated, rates for rental of equipment cover only such time as equipment is actually used and no allowance will be made for idle time. This last percentage shown is the net accumulated increase or decrease from the original quantity in the Engineer's Estimate.

Extra Work at Force Account:

Furnish, install, operate and maintain temporary facilities, including all related mechanical, electrical, water, sanitary, telecommunications, furniture and other such items as directed by the Engineer. This includes, but not limited to the following:

1) Deliver, set-up, furnish, dismantle, and return temporary modular trailers on Pier 7 (off Burma Road) consisting of approximately 10,800 +/- square feet of space for an estimated 5-year lease period.

2) Repair and remodel the warehouse office facility inside the Pier 7 warehouse as directed by the Engineer.

3) Demolish and remove an existing modular trailer building and all existing electrical conduit and sanitary sewer black plastic pipe, disconnect and cap any existing water service connections.

4) Remove existing parking stripes and markings, and re-stripe in as directed by the Engineer.

5) Provide and install site improvements including related mechanical, electrical, water, and other such items as directed by the Engineer.

No adjustment in contract time will be made since this work is not a controlling operation.

Labor, equipment and material approved by the Engineer, as necessary, will be paid in accordance with the provisions of Section 4-1.03D, "Extra Work" of the Standard Specifications and Section 5-1.24, "Force Account Payment" of the Special Provisions.

Estimated cost of Extra Work at Force Account $1,800,000.00

Estimated Cost: Increase ☑ Decrease ☐ **$1,800,000.00**

By reason of this order the time of completion will be adjusted as follows: 0 days

Submitted by

Signature Gary Pursell	Resident Engineer: Gary Pursell, P.E., Sup.T.E.	Date 1/11/07

Approval Recommended by

Signature Gary Pursell	Construction Engineer: Gary Pursell, P.E., Sup.T.E.	Date 1/17/07

Engineer Approval by

Signature [illegible]	(Print name and title) Peter Siegenthaler, Const Mgr - Chief	Date 1/18/07

We the undersigned contractor, have given careful consideration to the change proposed and agree, if this proposal is approved, that we will provide all equipment, furnish the materials, except as may otherwise be noted above, and perform all services necessary for the work above specified, and will accept as full payment therefor the prices shown above.

NOTE: If you, the contractor, do not sign acceptance of this order, your attention is directed to the requirements of the specifications as to proceeding with the ordered work and filing a written protest within the time therein specified.

Contractor Acceptance by

Signature [illegible]	(Print name and title) Michael D. Flowers Project Director	Date 1-11-07

RESIDENT ENGINEER PURSELL, GARY

PHONE NUMBER 510 622-5660

C O N T R A C T C H A N G E O R D E R 0 1 4 - 0 0 S

CONTRACT NO. 04-0120F4

FILING DATE 01/19/07

DESCRIPTION PIER 7 CAMPUS ADDITIONAL FACILITIES

CCO CATEGORY CAXX

APPROVAL DATE 01/18/07

TIME EXTENSION DAY NONE

ITEM NO.	DESCRIPTION OF CHANGE	APPROVED CHANGE QUANTITY	APPROVED CHANGE AMOUNT	CHANGES TO DATE CCO	CHANGES TO DATE QB	AUTHORIZED QUANTITY	QUANTITY PAID TO DATE	EST NO.
	EXTRA WORK -- FORCE ACCOUNT (+)		$1,800,000.00					

NET CHANGE THIS C.C.O. $1,800,000.00

AMOUNT OF 'BRIDGEWORK' $0.00

*** C.C.O. ACCEPTED AND FILED. ***

F E D E R A L P A R T I C I P A T I O N				F E D E R A L S E G R E G A T I O N			
DISP	TYPE	COST	TYPE	COST	TYPE	FUNDING SOURCE	PCT	FUNDING SOURCE	PCT
NEW	N	1,800,000.00		.00					

PROGRAM CAS121
DATE 01/19/07
TIME 01:41 PM

* * * C.C.O. EDIT ERROR LIST * * *

CONTRACT 04 - 0120F4

C. C. O. 014 - 00 S

ERROR CARD IMAGE	TYPE	FIELD	DESCRIPTION
040120F401400 X1PIER 7 CAMPUS ADDITIONAL FACILITIES +180000000011807 000	WARN	DISTRICT	CONTRACT ALREADY COMPLETED

STATE OF CALIFORNIA - DEPARTMENT OF TRANSPORTATION

CONTRACT CHANGE ORDER MEMORANDUM

TO: Peter Siegenthaler, Const Mgr / Gary Pursell, P.E., Sup.T.E.	FILE: **E.A.** 04 - 0120F4
FROM: Gary Pursell, P.E., Sup.T.E.	**CO-RTE-PM** SF-80-13.2/13.9
	FED. NO.
CCO#: **14** SUPPLEMENT#: **0** Category Code: **CAXX**	CONTINGENCY BALANCE (incl. this change) **$145,949,880.00**
COST: **$1,800,000.00** INCREASE ☑ DECREASE ☐	HEADQUARTERS APPROVAL REQUIRED? ☑ YES ☐ NO
SUPPLEMENTAL FUNDS PROVIDED: **$0.00**	IS THIS REQUEST IN ACCORDANCE WITH ENVIRONMENTAL DOCUMENTS? ☑ YES ☐ NO
CCO DESCRIPTION: Pier 7 Campus (Additional Facilities)	**PROJECT DESCRIPTION:** CONSTRUCT SELF-ANCHORED SUSPENSION BRIDGE

Original Contract Time:	Time Adj. This Change:	Previously Approved CCO Time Adjustments:	Percentage Time Adjusted: (including this change)	Total # of Unreconciled Deferred Time CCO(s): (including this change)
2490 Day(s)	**0** Day(s)	**30** Day(s)	**1** %	**0**

THIS CHANGE ORDER PROVIDES FOR:

Set-up temporary office facilities on Pier 7 (off Burma Road) for joint-use by the Department's engineering staff and Contractor's staff during the construction of the self-anchored suspension bridge and new east span SFOBB.

These joint facilities will be used for joint technical problem solving, corridor scheduling sessions and timely communication between all essential parties on the SFOBB corridor projects. Due to the requirements for global communications 24hrs a day, 7days a week, a facility with tele- and video-conferencing capabilities is required to allow on-demand and real-time communications to discuss scheduling, fabrication, working drawings, construction issues and potential changes. At any one time these dialogs will include the contractor, suppliers and fabricators, Department employees from construction, design and maintenance. The joint facility will also be used for weekly meetings with the Department's partners, including the Project Management Team.

In 2001, the Toll Bridge Seismic Retrofit Program set up field facilities at Pier 7 for the purpose of co-locating all engineering and administrative staff for the contractor and the Department. This was expanded to include joint work space, as in "Mission Control" for the Skyway contract (012024), the "Working Drawing Campus" for the SAS contract (0120F4) and similar to the field office facilities included in the Devil's Slide contract (1123U4).

The Bay Bridge contracts now include international participation, which present a number of logistical challenges to ensure timely communication between all the stakeholders for this project. The necessary communication covers many time zones, between parties located in the United States, Canada, China, Japan, South Korea, and England. Therefore, it is now necessary to set up the appropriate facilities in order to deliver the project in a timely manner.

This work is not covered by any contract items. Therefore, payment for this work will be at Extra Work at Force Account for an estimated cost of $1,800,000, which can be financed from the contingency fund. A cost analysis is on file in the project records.

No time adjustment is warranted, as this change order does not affect the controlling operation.

This change has received concurrence from Principal Construction Manager, Pete Siegenthaler (10/27/2006), HQ, Jon Tapping (10/27/2006), Toll Bridge Manager Tony Anziano on 11/14/06, and Project Manager, Ken Terpstra on 11/14/06.

This change order received an HQ Issue & Approve on 11/8/2006. A copy is attached for reference.

This change order received TBPOC approval on 12/21/06.

ADA Notice: For individuals with sensory disabilities, this document is available in alternate formats. For information call: (916) 654-6410 or TDD (916) 654-3880 or write Records and Forms Management, 1120 N Street, MS-89, Sacramento, CA 95814.

STATE OF CALIFORNIA • DEPARTMENT OF TRANSPORTATION

CONTRACT CHANGE ORDER INPUT

CEM-4901 REV 5/1993 CT# 7541-3516-2

ADA Notice

For individuals with sensory disabilities, this document is available in alternate formats. For information call (916) 263-2041 or TDD (916) 263-2044 or write Records and Forms Managment, 1120 N Street, MS-89, Sacramento, CA 95814.

CASOAC

CONTRACT NO. 04 (1) 0120F4 (3–8) CCO NO. 016 (9) SUPPL. 00 (13)

CONSTRUCTION DEPT. USE ONLY ☐ FUNCTION (14) ☐ OVERRIDE (15)

CARD TYPE 1 (16)

C. C. O. DESCRIPTION (17–56): W2-TENDON BLOCK-OUT DETAILS

NET $ CHANGE THIS CCO: + 103488.71 (57–66)

APPROVAL DATE: 08-23-07 (67)

TIME EXTENSION DAYS: + 000 (74)

CATEGORY: CHPA (77)

CARD TYPE 2 (16)

	PAYMENT METHOD			$ AMOUNT
EW ☐ (17)	AC ☒ (18)	FA ☐ (19)	LS ☒ (20) UP ☐	+ 103488.71 (23–31)
EW ☐	AC ☐	FA ☐	LS ☐ UP ☐	
EW ☐	AC ☐	FA ☐	LS ☐ UP ☐	

CARD TYPE 4 (16)

NET $ AMOUNT BRIDGE WORK THIS CCO

+ 103488.71 (18–26)

CARD TYPE 3 (16)

ITEM NUMBER (17–19)		QUANTITY (21.32)	ITEM NUMBER (17–19)		QUANTITY (21.32)
	+ -			+ -	
	+ -			+ -	
	+ -			+ -	
	+ -			+ -	
	+ -			+ -	
	+ -			+ -	
	+ -			+ -	
	+ -			+ -	
	+ -			+ -	
	+ -			+ -	

CARD TYPE 5 (16)

FEDERAL PARTICIPATION: N (17)

P = PARTICIPATING

M = NON-PARTICIPATING (MAINTENANCE)

N = NON-PARTICIPATING (OTHER THAN MAINTENANCE)

R = NON-PARTICIPATING (REIMBURSEMENT BY OTHERS)

S = PARTICIPATING IN PART

IF PARTICIPATING IN PART (S), BREAKDOWN COST AS FOLLOWS: (INPUT TYPE AS P,M,N,R)

TYPE (18)	COST (19.27)

FEDERAL SEGREGATION (IF MORE THAN ONE FUNDING SOURCE)

☒ E = CCO to be funded as per contract (28) ☐ F = CCO to be funded as follows: (29)

FEDERAL FUNDING SOURCE (30–44)	PERCENT (45)

IN CASE OF QUESTIONS CONTACT: *NAME*

GEORGE BOU-GHOSN — GEORGE_BOUGHOSN@DOT.CA.GOV — BUSINESS PHONE (510) 622-5196 — VERIFY

STATE OF CALIFORNIA - DEPARTMENT OF TRANSPORTATION

CONTRACT CHANGE ORDER MEMORANDUM

DATE: 8/23/2007 Page 1 of 1

TO: Pete Siegenthaler, Prin. TE / Gary Pursell, P.E., Sup T.E.	FILE: E.A. 04 - 0120F4
FROM: Gary Pursell, P.E., Sup.T.E.	CO-RTE-PM SF-80-13.2/13.9
	FED. NO.
CCO#: 16 SUPPLEMENT#: 0 Category Code: CHPA	CONTINGENCY BALANCE (incl. this change) $141,169,525.58
COST: $103,488.71 INCREASE ☑ DECREASE ☐	HEADQUARTERS APPROVAL REQUIRED? ☐ YES ☑ NO
SUPPLEMENTAL FUNDS PROVIDED: $0.00	IS THIS REQUEST IN ACCORDANCE WITH ENVIRONMENTAL DOCUMENTS? ☑ YES ☐ NO
CCO DESCRIPTION: W2-Tendon Block-Out Details (Corr Prev)	**PROJECT DESCRIPTION:** CONSTRUCT SELF-ANCHORED SUSPENSION BRIDGE

Original Contract Time:	Time Adj. This Change:	Previously Approved CCO Time Adjustments:	Percentage Time Adjusted: (including this change)	Total # of Unreconciled Deferred Time CCO(s): (including this change)
2490 Day(s)	0 Day(s)	30 Day(s)	1 %	0

THIS CHANGE ORDER PROVIDES FOR:

Adding prestressing anchorage blockouts to the plans and relocating continuity tendons away from the added blockout at the W2 Cap Beam.

This change order mitigates the potential of corrosion during stage construction in the seven wire strands at the W2 Cap Beam. Based on the stressing sequence and because the listed tendons have a "Dead End" on one end, the Contractor is required to install the tendons along with all the ancillary hardware prior to any concrete being poured. Unless sealed from the environment, this implies that the un-grouted tendons may be exposed for a prolong period. The blockouts mitigate this issue.

Payment for this work will be done at Adjustment of Compensation at Lump Sum in the amount of $103,488.71, which can be financed from the contingency fund. A detailed cost analysis is on file.

No time adjustment is warranted, as this change order does not affect the controlling operation.

This change order was approved by the Engineer on August 23, 2007.

CONCURRED BY:

Construction Engineer:	Res. Eng., Gary Pursell, Sup. TE	Date 11/14/06
Bridge Engineer:	Struct Rep, Rick Morrow, Sup TE	Date 11/13/06
Project Engineer:	CT Oversight, Reza Valizadeh, P.E	Date 4/5/07
Project Manager:	Proj Manager, Ken Terpstra	Date 3/15/07
FHWA Rep.:		Date
Environmental:	PCE, Pete Siegenthaler, Prin TE	Date 12/13/06
Other (specify):	Design of Record, Marwan Nader,	Date 11/6/06
Other (specify):	Struct Maint, Bill Zanetich, P.E.	Date 4/5/07
District Prior Approval By:		Date
HQ (Issue Approve) By:		Date
Resident Engineer's Signature:	Gary Pursell	Date 8/23/07

ESTIMATE OF COST

	THIS REQUEST	TOTAL TO DATE
ITEMS	$0.00	$0.00
FORCE ACCOUNT	$0.00	$0.00
AGREED PRICE	$0.00	$0.00
ADJUSTMENT	$103,488.71	$103,488.71
TOTAL	$103,488.71	$103,488.71

FEDERAL PARTICIPATION

☐ PARTICIPATING ☐ PARTICIPATING IN PART ☑ NONE
☐ NON-PARTICIPATING (MAINTENANCE) ☐ NON-PARTICIPATING

FEDERAL SEGREGATION (if more than one Funding Source or P.I.P. type)
☑ CCO FUNDED PER CONTRACT ☐ CCO FUNDED AS FOLLOWS

FEDERAL FUNDING SOURCE	PERCENT

ADA Notice: For individuals with sensory disabilities, this document is available in alternate formats. For information call: (916) 654-6410 or TDD (916) 654-3880 or write Records and Forms Management, 1120 N Street, MS-89, Sacramento, CA 95814.

CONTRACT CHANGE ORDER

Change Requested by: Engineer

CCO: 16	Suppl. No. 0	Contract No. 04 - 0120F4	Road SF-80-13.2/13.9	FED. AID LOC.:

To: **AMERICAN BRIDGE/FLUOR ENTERPRISES INC A JOINT VENT**

You are directed to make the following changes from the plans and specifications or do the following described work not included in the plans and specifications for this contract. ***NOTE: This change order is not effective until approved by the Engineer.***

Description of work to be done, estimate of quantities and prices to be paid. (Segregate between additional work at contract price, agreed price and force account.) Unless otherwise stated, rates for rental of equipment cover only such time as equipment is actually used and no allowance will be made for idle time. This last percentage shown is the net accumulated increase or decrease from the original quantity in the Engineer's Estimate.

Adjustment of Compensation at Lump Sum:

Add prestressing anchorage blockouts and relocate continuity tendons away from the added blockouts at the W2 Cap Beam as shown on Sheets two (2) through twelve (12) of this change order.

The following revised sheets detail all changes:

Revised Contract Plan Sheet Nos. 462R2, 463R2, 466R2, 468R2, 470R2, 473R2, 499R2, 506R2, 507R2, 508R2 and 509R2 (of 1204).

This change order resolves costs associated with Contractor Request For Information (RFI) Nos. 135R0, 135R1 and 328R0 with respect to the changes addressed in this change order.

For this work, the contractor will be paid the sum of $103,488.71. This sum constitutes full compensation, including markups, for this change.

Estimated cost of Adjustment of Compensation at Lump Sum $103,488.71

Estimated Cost: **Increase** ☑ **Decrease** ☐ **$103,488.71**

By reason of this order the time of completion will be adjusted as follows: 0 days

Submitted by

Signature	Resident Engineer	Date
Gary Pursell	Gary Pursell, P.E., Sup.T.E.	8/17/07

Approval Recommended by

Signature	Supervising Bridge Engineer	Date
[illegible]	Richard Morrow, P.E., Sup. BE	8/17/07

Engineer Approval by

Signature	Supervising Transportation Engineer	Date
Gary Pursell	Gary Pursell, P.E., Sup. TE	8/23/07

We the undersigned contractor, have given careful consideration to the change proposed and agree, if this proposal is approved, that we will provide all equipment, furnish the materials, except as may otherwise be noted above, and perform all services necessary for the work above specified, and will accept as full payment therefor the prices shown above.

NOTE: If you, the contractor, do not sign acceptance of this order, your attention is directed to the requirements of the specifications as to proceeding with the ordered work and filing a written protest within the time therein specified.

Contractor Acceptance by

Signature	(Print name and title)	Date
[illegible]	Michael D. Flowers Project Director	8-22-07

MARK	DATE	DESCRIPTIONS	BY	CH'D	CCO#
2	01/31/07	CORROSION PROTECTION	JD	AS	16
1	07/21/06	W2 CAP BEAM ISD	JD	NV	23

REVISIONS

CONTRACT CHANGE ORDER NO. 16
SHEET 2 OF 12

Caltrans now has a web site! To get to the web site, go to: http://www.dot.ca.gov

FOR REVISIONS ONLY

DIST.	COUNTY	ROUTE	KILOMETER POST TOTAL PROJECT	SHEET NO.	TOTAL SHEETS
04	SF	80	13.2/13.9	462R2	1204

REGISTERED ENGINEER - CIVIL

12-6-04
PLANS APPROVAL DATE

The State of California or its officers or agents shall not be responsible for the accuracy or completeness of electronic copies of this plan sheet.

T.Y. LIN / MOFFATT & NICHOL
825 BATTERY STREET
SAN FRANCISCO, CA 94111

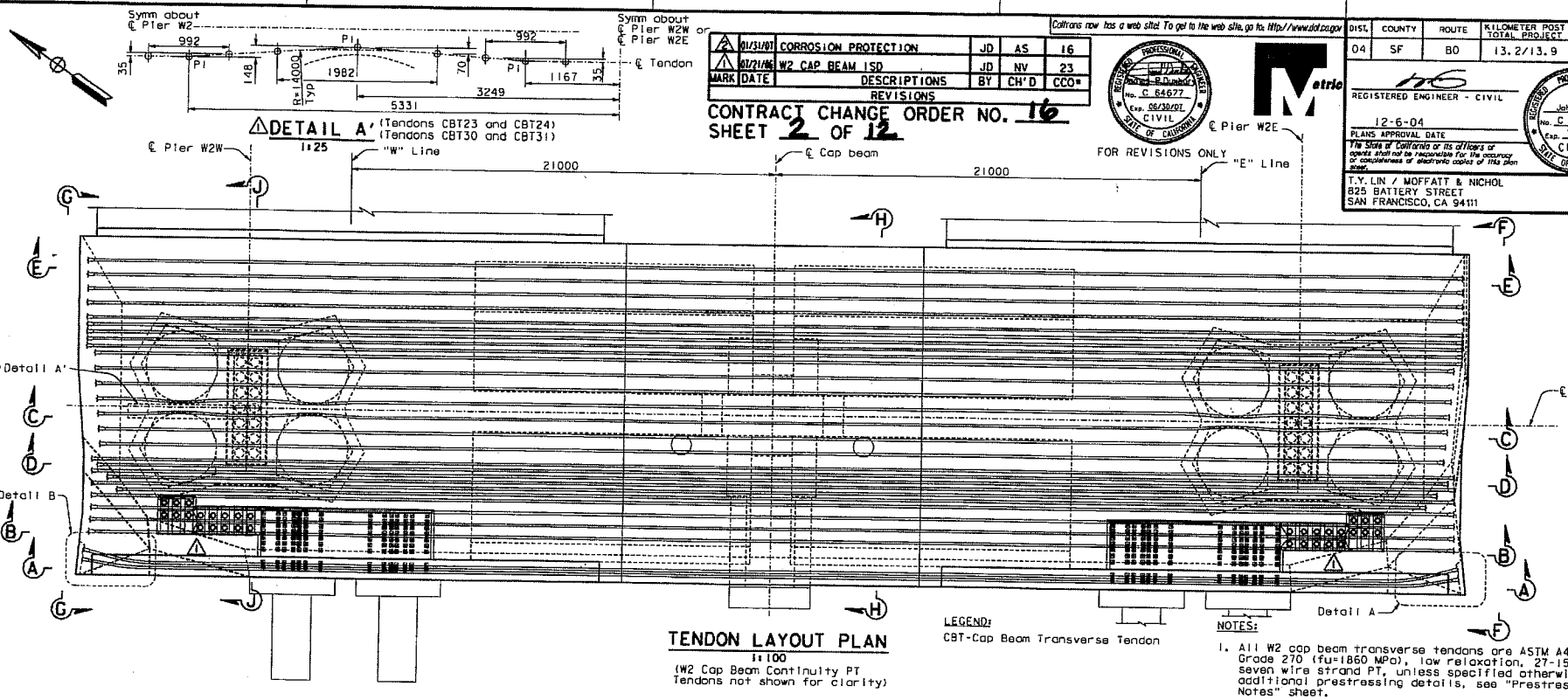

DETAIL A'
(Tendons CBT23 and CBT24)
(Tendons CBT30 and CBT31)
1:25

TENDON LAYOUT PLAN
1:100
(W2 Cap Beam Continuity PT Tendons not shown for clarity)

LEGEND:
CBT-Cap Beam Transverse Tendon

NOTES:

1. All W2 cap beam transverse tendons are ASTM A416 Grade 270 (fu=1860 MPa), low relaxation, 27-15 Dia seven wire strand PT, unless specified otherwise. For additional prestressing details, see "Prestressing Notes" sheet.
2. For Section A-A, see "W2 Cap Beam Post-Tensioning Details No.2" sheet.
3. For Sections B-B through E-E, see "W2 Cap Beam Post-Tensioning Details No.3" sheet.
4. For Sections F-F through J-J, see "W2 Cap Beam Post-Tensioning Details No.4" sheet.
5. For bikepath details near cap beam, see "Bikepath Details" sheets.
6. For PT blockout dimensions, see "W2 Cap Beam Blockout Details" sheets.
7. Jacking force in the W2 cap beam transverse tendons (CBT1-CBT36) shall be 5265 kN typical.
8. For general stressing sequence, see "Pier W2 Construction Sequence" sheet.
9. For "W2 Cap Beam Post-Tensioning Details" sheets, the Contractor shall verify all controlling field dimensions before ordering or fabricating any material.
10. W2 cap beam elevations are to top of finished concrete and do not include overlay thickness.

ALL DIMENSIONS ARE IN MILLIMETERS UNLESS OTHERWISE SHOWN

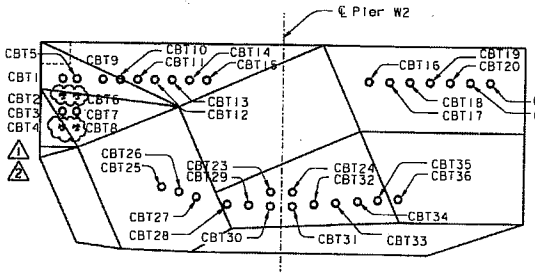

TENDON DESIGNATION
1:80

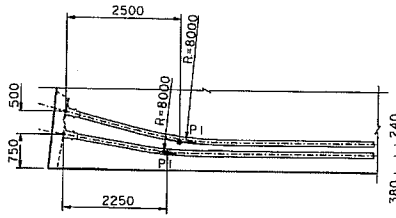

DETAIL B
1:50
(Tendons CBT1 and CBT5)
(Tendons CBT2 thru CBT8 similar)

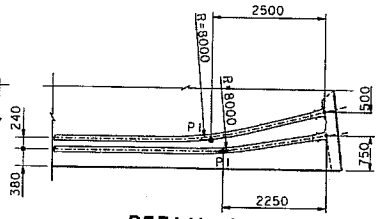

DETAIL A
1:50
(Tendons CBT1 and CBT5)
(Tendons CBT2 thru CBT8 similar)

R. Vallizadeh/V. Toan/Y.L./W.L./F.C.
DESIGN OVERSIGHT
SIGN OFF DATE 01/31/07
Rev. Date: 3-18-88

DESIGN	BY J. Sun	CHECKED M. Chen	
DETAILS	BY J. Duxbury	CHECKED M. Chen	
QUANTITIES	BY S. Shi	CHECKED D. Harrison	

PREPARED FOR THE STATE OF CALIFORNIA DEPARTMENT OF TRANSPORTATION

R. Manzanarez
PROJECT ENGINEER

BRIDGE NO. 34-0006L/R
KILOMETER POST 13.2/13.9

CU 04
EA 0120F1

ORIGINAL SCALE IN MILLIMETERS FOR REDUCED PLANS 0 10 20 30 40 50 60 70 80 90 100

DISREGARD PRINTS BEARING EARLIER REVISION DATES

REVISION DATES (PRELIMINARY STAGE ONLY)

FILE => I:\bb\04-012001\eas\contract plans and ccos\cco#16\ccoptl.dgn

SAN FRANCISCO OAKLAND BAY BRIDGE
EAST SPAN SEISMIC SAFETY PROJECT
SELF-ANCHORED SUSPENSION BRIDGE
(SUPERSTRUCTURE & TOWER)

W2 CAP BEAM POST-TENSIONING DETAILS NO. 1

SHEET 045R2 OF

100 % PS&E

DATE PLOTTED => 15 MAR 2007 TIME PLOTTED => 15:21:43

USERNAME = kvisitor

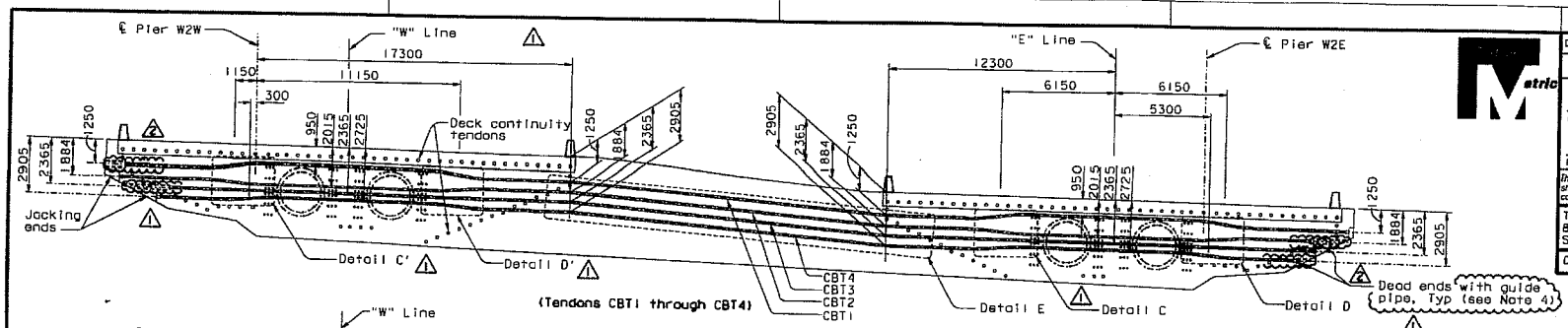

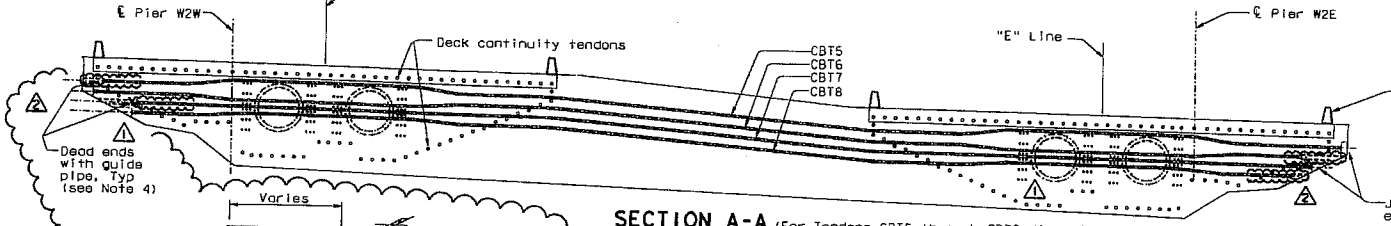

SECTION A-A

1:125 (For Tendons CBT5 through CBT8 dimensions, see Tendon CBT1 through CBT4 dimensions)

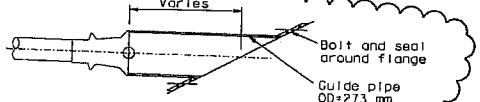

DEAD END GUIDE PIPE

NTS (see Note 4)

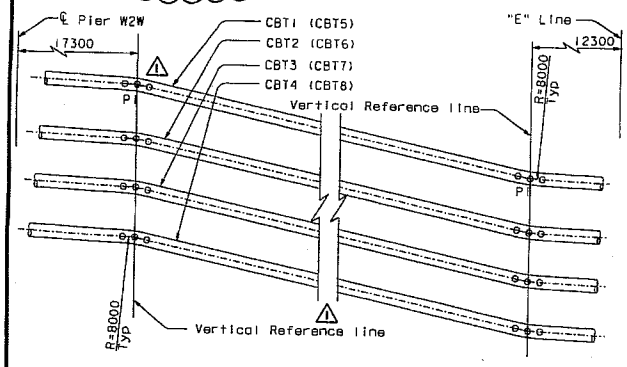

DETAIL E

NTS

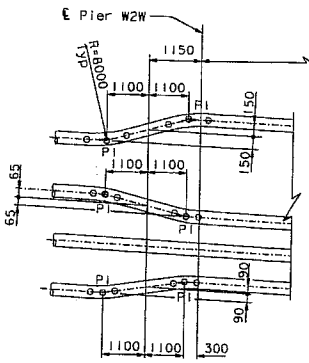

DETAIL C'

NTS

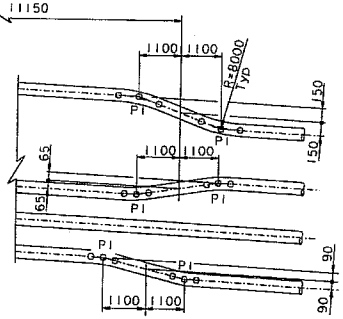

DETAIL D'

NTS

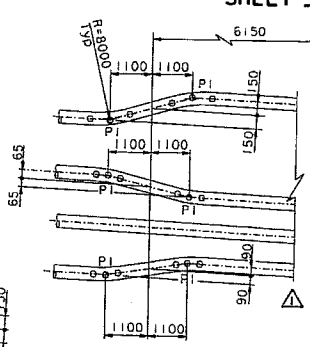

DETAIL C

NTS

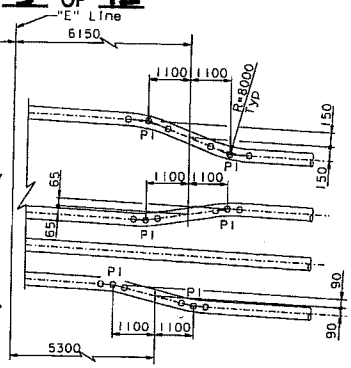

DETAIL D

NTS

NOTES:

1. For additional details, see "W2 Cap Beam Post-Tensioning Details No.1" sheet.
2. For PT blockout details, see "W2 Cap Beam Blockout Details" sheets.
3. For deck continuity tendon details, see "W2 Cap Beam Post-Tensioning Details No.5" through "W2 Cap Beam Post-Tensioning Details No.12" sheets.
4. Contractor shall coordinate the dead end guide pipe details with the PT System Supplier and shall submit them to the Engineer for review and approval. Contractor shall grout the guide pipe after stressing operations have been completed.

ALL DIMENSIONS ARE IN MILLIMETERS UNLESS OTHERWISE SHOWN

DISTRICT	COUNTY	ROUTE	KILOMETER POST TOTAL PROJECT	SHEET NO.	TOTAL SHEETS
04	SF	80	13.2/13.9	463R2	1204

REGISTERED ENGINEER - CIVIL

12-6-04

PLANS APPROVAL DATE

REGISTERED PROFESSIONAL ENGINEER John Sun No. C 54648 Exp. 12/31/05 CIVIL STATE OF CALIFORNIA

The State of California or its officers or agents shall not be responsible for the accuracy or completeness of electronic copies of this plan sheet.

T.Y. LIN / MOFFATT & NICHOL
825 BATTERY STREET
SAN FRANCISCO, CA 94111

Caltrans now has a web site! To get to the web site, go to: http://www.dot.ca.gov

REGISTERED PROFESSIONAL ENGINEER No. C 64677 Exp. 06/30/07 CIVIL STATE OF CALIFORNIA

FOR REVISIONS ONLY

MARK	DATE	DESCRIPTIONS	BY	CH'D	CCO#
2	01/31/07	CORROSION PROTECTION	JD	AS	16
1	01/21/06	W2 CAP BEAM ISO	JD	NV	23

REVISIONS

CONTRACT CHANGE ORDER NO. 16
SHEET 3 OF 12

100 % PS&E

R. Vallizadeh/V. Toon/Y.L./W.L./F.C.
DESIGN OVERSIGHT
SIGN OFF DATE 01/31/07
Rev. Date: 5-16-98

DESIGN	BY J. Sun	CHECKED M. Chen	
DETAILS	BY J. Duxbury	CHECKED M. Chen	
QUANTITIES	BY S. Shi	CHECKED D. Harrison	

PREPARED FOR THE STATE OF CALIFORNIA DEPARTMENT OF TRANSPORTATION

R. Manzanarez
PROJECT ENGINEER

BRIDGE NO. 34-0006L/R
KILOMETER POST 13.2/13.9
CU 04
EA 0120F1

ORIGINAL SCALE IN MILLIMETERS FOR REDUCED PLANS 0 10 20 30 40 50 60 70 80 90 100

DISREGARD PRINTS BEARING EARLIER REVISION DATES

REVISION DATES (PRELIMINARY STAGE ONLY) 11/30/01 01/30/02 03/29/02 07/26/02 12/13/02

SAN FRANCISCO OAKLAND BAY BRIDGE
EAST SPAN SEISMIC SAFETY PROJECT
SELF-ANCHORED SUSPENSION BRIDGE
(SUPERSTRUCTURE & TOWER)

W2 CAP BEAM POST-TENSIONING DETAILS NO. 2

SHEET 046R2 OF

FILE => I:\DD\04-0120F1\sas\contract plans and ccs\ccs\in progress\cco#16\oecpt02.dgn

USERNAME => vvisitor DATE PLOTTED => 15 MAR 2001 TIME PLOTTED => 15:24:30

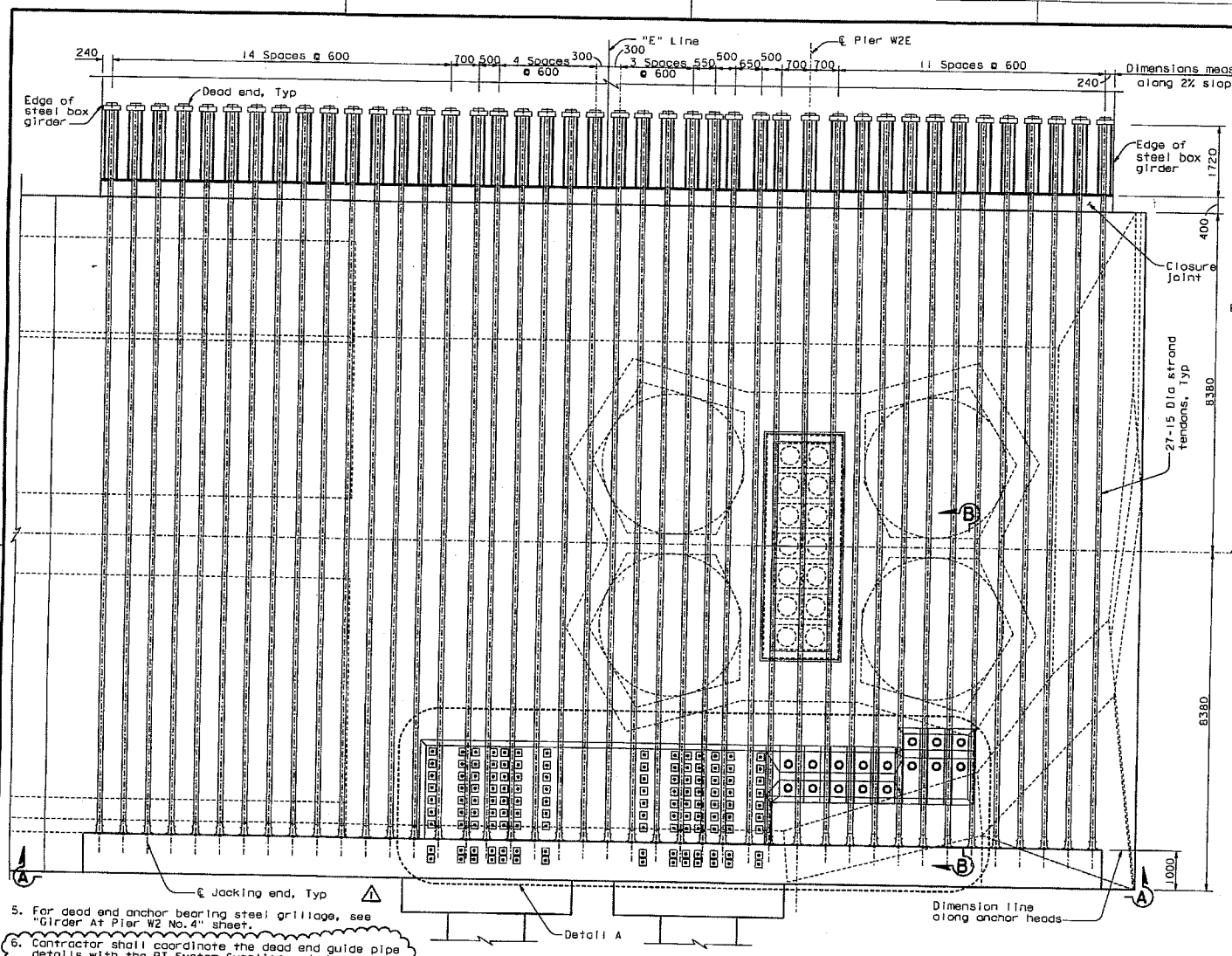

TOP TENDON LAYOUT PLAN ("E" Line)

1:50

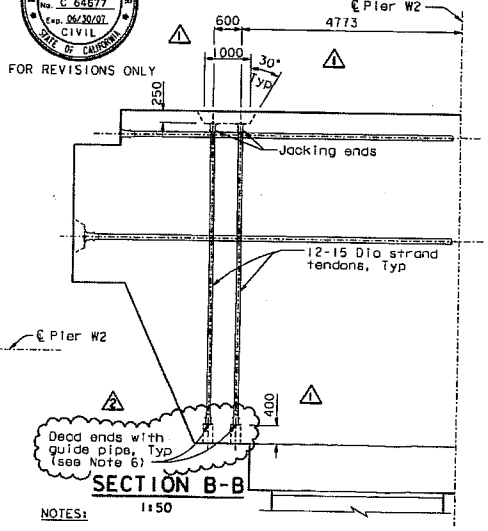

SECTION B-B

1:50

NOTES:

1. For Section A-A, see "W2 Cap Beam Post-Tensioning Details No. 9" sheet.
2. For Detail A, see "W2 Cap Beam Post-Tensioning Details No. 10" sheet.
3. All W2 cap beam continuity tendons are ASTM A416 Grade 270 (fu=1860 MPa), low relaxation, 27-15 Dia seven wire strand PT, unless specified otherwise. For additional prestressing details, see "Prestressing Notes" sheet.
4. For blockout details, see "W2 Cap Beam Blockout Details" sheets.
5. For dead end anchor bearing steel grillage, see "Girder At Pier W2 No. 4" sheet.
6. Contractor shall coordinate the dead end guide pipe details with the PT System Supplier and shall submit them to the Engineer for review and approval. Contractor shall grout the guide pipe after stressing operations have been completed.

MARK	DATE	DESCRIPTIONS	BY	CH'D	CCO#
2	01/31/07	CORROSION PROTECTION	JD	AS	16
1	07/21/06	W2 CAP BEAM ISD	JD	NV	23

REVISIONS

CONTRACT CHANGE ORDER NO. 16
SHEET 4 OF 12

ALL DIMENSIONS ARE IN MILLIMETERS UNLESS OTHERWISE SHOWN

DIST.	COUNTY	ROUTE	KILOMETER POST TOTAL PROJECT	SHEET NO.	TOTAL SHEETS
04	SF	80	13.2/13.9	466R2	1204

REGISTERED ENGINEER - CIVIL
12-6-04
PLANS APPROVAL DATE
The State of California or its officers or agents shall not be responsible for the accuracy or completeness of electronic copies of this plan sheet.

REGISTERED PROFESSIONAL ENGINEER John Sun No. C 54648 Exp. 12/31/05 CIVIL STATE OF CALIFORNIA

T.Y. LIN / MOFFATT & NICHOL
825 BATTERY STREET
SAN FRANCISCO, CA 94111

Caltrans now has a web site! To get to the web site, go to: http://www.dot.ca.gov

REGISTERED PROFESSIONAL ENGINEER Jackie P. Duxbury No. C 64677 Exp. 06/30/07 CIVIL STATE OF CALIFORNIA

FOR REVISIONS ONLY

R. Valizadeh/V. Toon/Y.L./W.L./F.C.
DESIGN OVERSIGHT
SIGN OFF DATE 01/31/07
Rev. Date: 5-15-98

DESIGN	BY J. Sun	CHECKED	M. Chen
DETAILS	BY J. Duxbury	CHECKED	M. Chen
QUANTITIES	BY S. Shi	CHECKED	D. Harrison

PREPARED FOR THE STATE OF CALIFORNIA DEPARTMENT OF TRANSPORTATION

R. Manzanarez
PROJECT ENGINEER

BRIDGE NO. 34-0006L/R
KILOMETER POST 13.2/13.9

SAN FRANCISCO OAKLAND BAY BRIDGE
EAST SPAN SEISMIC SAFETY PROJECT
SELF-ANCHORED SUSPENSION BRIDGE
(SUPERSTRUCTURE & TOWER)

W2 CAP BEAM POST-TENSIONING DETAILS NO. 5

ORIGINAL SCALE IN MILLIMETERS FOR REDUCED PLANS 0 10 20 30 40 50 60 70 80 90 100

CU 04
EA 0120F1

DISREGARD PRINTS BEARING EARLIER REVISION DATES

REVISION DATES (PRELIMINARY STAGE ONLY)

SHEET 049R2 OF

FILE => I:\bb\04-012001\sas\contract plans and cco\cco\in progress\cco#16\oecpt05.dgn

USERNAME => visitor DATE PLOTTED => 15 MAR 2007 TIME PLOTTED => 15:26:12

100 % PS&E

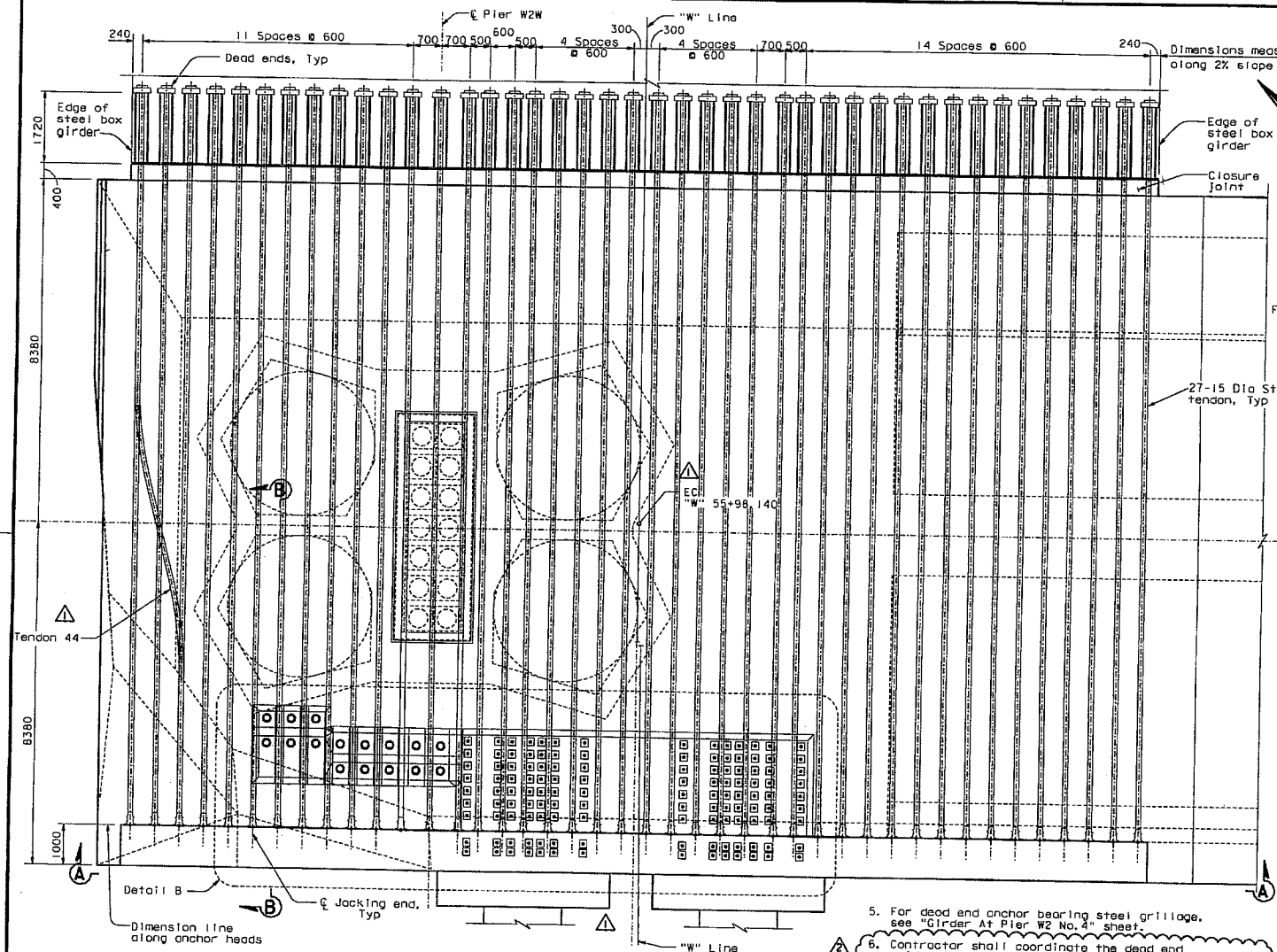

TOP TENDON LAYOUT PLAN ("W" Line)

1:50

ALL DIMENSIONS ARE IN MILLIMETERS UNLESS OTHERWISE SHOWN

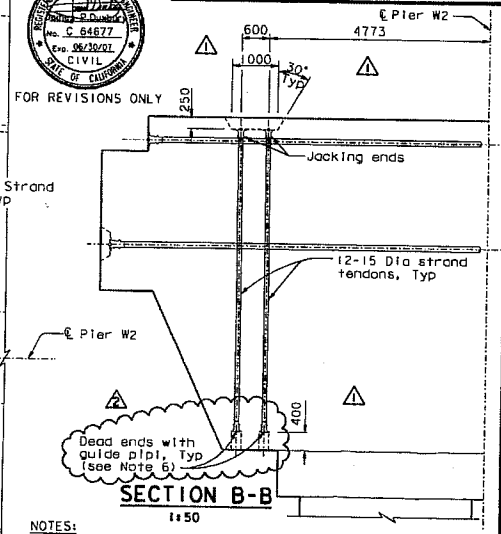

SECTION B-B

1:50

NOTES:

1. For Section A-A, see "W2 Cap Beam Post-Tensioning Details No.9" sheet.
2. For Detail B, see "W2 Cap Beam Post-Tensioning Details No.10" sheet.
3. All W2 cap beam continuity tendons are ASTM A416 Grade 270 (fu=1860 MPa), low relaxation, 27-15 Dia seven wire strand PT, unless specified otherwise. For additional prestressing details, see "Prestressing Notes" sheet.
4. For blockout details, see "W2 Cap Beam Blockout Details" sheets.
5. For dead end anchor bearing steel grillage, see "Girder At Pier W2 No.4" sheet.
6. Contractor shall coordinate the dead end guide pipe details with the PT System Supplier and shall submit them to the Engineer for review and approval. Contractor shall grout the guide pipe after stressing operations have been completed.

MARK	DATE	DESCRIPTIONS	BY	CH'D	CCO#
2	01/31/07	CORROSION PROTECTION	JD	AS	16
1	07/21/06	W2 CAP BEAM ISD	JD	NV	23

REVISIONS

CONTRACT CHANGE ORDER NO. 16
SHEET 5 OF 12

DIST.	COUNTY	ROUTE	KILOMETER POST TOTAL PROJECT	SHEET NO.	TOTAL SHEETS
04	SF	80	13.2/13.9	468R2	1204

REGISTERED ENGINEER - CIVIL
12-6-04
PLANS APPROVAL DATE

The State of California or its officers or agents shall not be responsible for the accuracy or completeness of electronic copies of this plan sheet.

REGISTERED PROFESSIONAL ENGINEER John Sun No. C 54648 Exp. 12/31/05 CIVIL STATE OF CALIFORNIA

T.Y. LIN / MOFFATT & NICHOL
825 BATTERY STREET
SAN FRANCISCO, CA 94111

Caltrans now has a web site! To get to the web site, go to: http://www.dot.ca.gov

REGISTERED PROFESSIONAL ENGINEER Phillip P. Duxbury No. C 64677 Exp. 06/30/07 CIVIL STATE OF CALIFORNIA

FOR REVISIONS ONLY

100 % PS&E

SAN FRANCISCO OAKLAND BAY BRIDGE
EAST SPAN SEISMIC SAFETY PROJECT
SELF-ANCHORED SUSPENSION BRIDGE
(SUPERSTRUCTURE & TOWER)

W2 CAP BEAM POST-TENSIONING DETAILS NO. 7

R. Valizadeh/V. Toan/Y.L./W.L./F.C.
DESIGN OVERSIGHT
SIGN OFF DATE 01/31/07
Rev. Date: 5-18-98

DESIGN	BY J. Sun	CHECKED	M. Chen
DETAILS	BY J. Duxbury	CHECKED	M. Chen
QUANTITIES	BY S. Shi	CHECKED	D. Harrison

ORIGINAL SCALE IN MILLIMETERS FOR REDUCED PLANS 0 10 20 30 40 50 60 70 80 90 100

PREPARED FOR THE STATE OF CALIFORNIA DEPARTMENT OF TRANSPORTATION

R. Manzanarez
PROJECT ENGINEER

BRIDGE NO. 34-0006L/R
KILOMETER POST 13.2/13.9

CU 04
EA 0120F1

DISREGARD PRINTS BEARING EARLIER REVISION DATES

REVISION DATES (PRELIMINARY STAGE ONLY) 06/01/01 06/21/01 04/30/02 07/31/02 12/15/02

SHEET 051R2 OF

FILE => I:\bb\04-012001\sas\contract plans and cco\cco\in progress\cco#16\oecpt07.dgn

USERNAME => visitor DATE PLOTTED => 15 MAR 2007 TIME PLOTTED => 15:27:40

DIST.	COUNTY	ROUTE	KILOMETER POST TOTAL PROJECT	SHEET NO.	TOTAL SHEETS
04	SF	80	13.2/13.9	470R2	1204

REGISTERED ENGINEER - CIVIL

12-6-04
PLANS APPROVAL DATE

REGISTERED PROFESSIONAL ENGINEER John Sun No. C 54648 Exp. 12/31/05 CIVIL STATE OF CALIFORNIA

The State of California or its officers or agents shall not be responsible for the accuracy or completeness of electronic copies of this plan sheet.

T.Y. LIN / MOFFATT & NICHOL
625 BATTERY STREET
SAN FRANCISCO, CA 94111

Caltrans now has a web site! To get to the web site, go to: http://www.dot.ca.gov

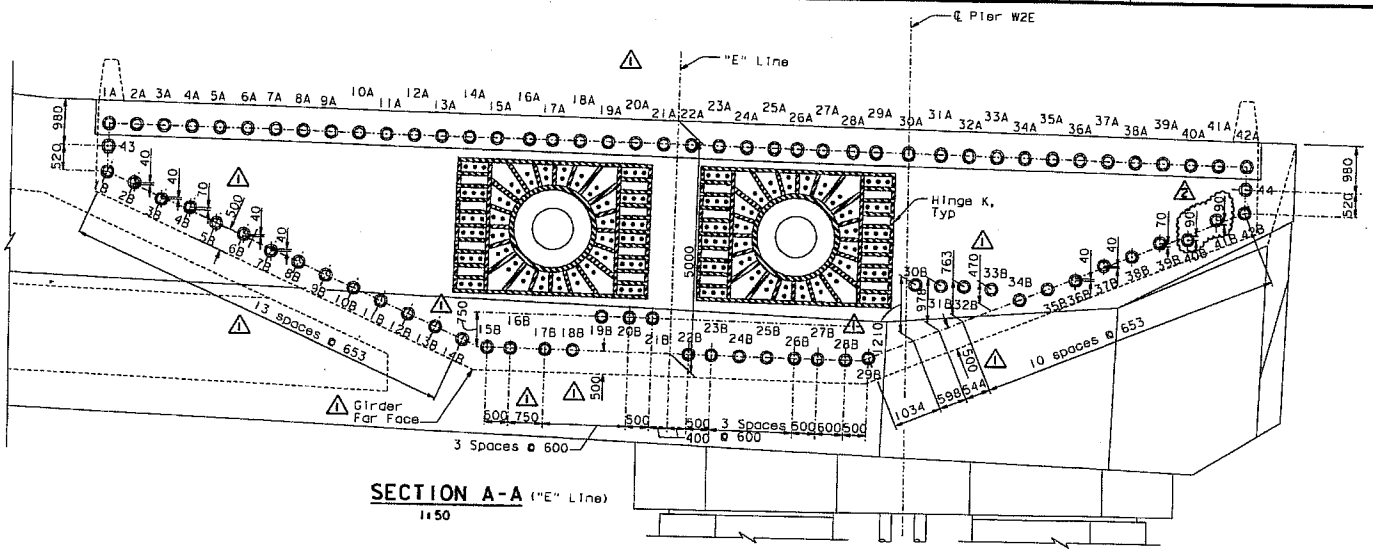

SECTION A-A ("E" Line)
1:50

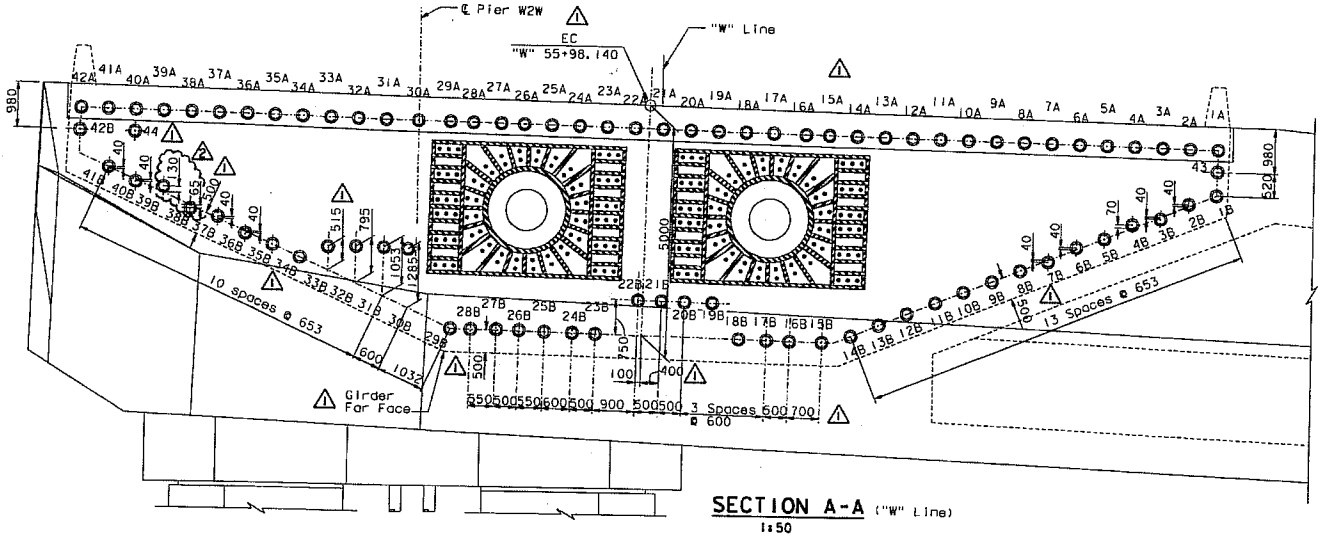

SECTION A-A ("W" Line)
1:50

NOTES:

1. For additional details, see "W2 Cap Beam Post-Tensioning Details No.5" and "W2 Cap Beam Post-Tensioning Details No.7" sheets.
2. Jacking force in the W2 cap beam continuity tendons (1A-42A, 1B-42B, 43 & 44) shall be 5265 kN typical.

REGISTERED PROFESSIONAL ENGINEER John Sun No. C 64677 Exp. 06/30/07 CIVIL STATE OF CALIFORNIA

FOR REVISIONS ONLY

MARK	DATE	DESCRIPTIONS	BY	CH'D	CCO#
2	01/31/07	CORROSION PROTECTION	JD	AS	16
1	07/21/06	W2 CAP BEAM ISD	JD	NV	23

REVISIONS

CONTRACT CHANGE ORDER NO. 16
SHEET 6 OF 12

100 % PS&E

ALL DIMENSIONS ARE IN MILLIMETERS UNLESS OTHERWISE SHOWN

R. Vaitzadeh/V. Toan/Y.L./N.L./F.C.
DESIGN OVERSIGHT
SIGN OFF DATE 01/31/07
Rev. Date: 5-16-96

	BY	CHECKED
DESIGN	J. Sun	M. Chen
DETAILS	J. Duxbury	M. Chen
QUANTITIES	S. Shi	D. Harrison

PREPARED FOR THE STATE OF CALIFORNIA DEPARTMENT OF TRANSPORTATION

R. Manzanarez
PROJECT ENGINEER

BRIDGE NO. 34-0006L/R
KILOMETER POST 13.2/13.9
CU 04
EA 0120F1

SAN FRANCISCO OAKLAND BAY BRIDGE
EAST SPAN SEISMIC SAFETY PROJECT
SELF-ANCHORED SUSPENSION BRIDGE
(SUPERSTRUCTURE & TOWER)

W2 CAP BEAM POST-TENSIONING DETAILS NO. 9

ORIGINAL SCALE IN MILLIMETERS FOR REDUCED PLANS 0 10 20 30 40 50 60 70 80 90 100

DISREGARD PRINTS BEARING EARLIER REVISION DATES

REVISION DATES (PRELIMINARY STAGE ONLY)

SHEET 053R2 OF

FILE => I:\bb\04-012001\sas\contract plans and ccos\ccs\in progress\coo#16\ogcpt09.dgn

USERNAME => jvillatoro DATE PLOTTED => 15 MAR 2007 TIME PLOTTED => 15:28:05

DIST.	COUNTY	ROUTE	KILOMETER POST TOTAL PROJECT	SHEET NO.	TOTAL SHEETS
04	SF	80	13.2/13.9	473R2	1204

REGISTERED ENGINEER - CIVIL

12-6-04
PLANS APPROVAL DATE

REGISTERED PROFESSIONAL ENGINEER John Sun No. C 54648 Exp. 12/31/05 CIVIL STATE OF CALIFORNIA

The State of California or its officers or agents shall not be responsible for the accuracy or completeness of electronic copies of this plan sheet.

T.Y. LIN / MOFFATT & NICHOL
825 BATTERY STREET
SAN FRANCISCO, CA 94111

To get to the web site, go to: http://www.dot.ca.gov

W2 CAP BEAM CONTINUITY TENDON TABLE-1 FOR "E" LINE

Tendon No.	Type	Tendon No.	Type
1A	1	24A	1
1B	2	24B	2
2A	1	25A	1
2B	5	25B	2
3A	1	26A	1
3B	5	26B	2
4A	1	27A	1
4B	5	27B	2
5A	1	28A	1
5B	2	28B	2
6A	1	29A	3
6B	5	29B	2
7A	1	30A	3
7B	5	30B	5, 9
8A	1	31A	3
8B	2	31B	5
9A	1	32A	1
9B	2	32B	5
10A	1	33A	1
10B	2	33B	5
11A	1	34A	1
11B	2	34B	2
12A	1	35A	1
12B	2	35B	2
13A	1	36A	1
13B	2	36B	5
14A	1	37A	1
14B	2	37B	5
15A	1	38A	1
15B	8	38B	2
16A	1	39A	1
16B	8	39B	5
17A	1	40A	1
17B	2	40B	5
18A	1	41A	1
18B	10	41B	5
19A	1	42A	1
19B	4	42B	2
20A	1	43	2
20B	4	44	2
21A	1		
21B	4		
22A	1		
22B	2		
23A	1		
23B	2		

W2 CAP BEAM CONTINUITY TENDON TABLE-1 FOR "W" LINE

Tendon No.	Type	Tendon No.	Type
1A	1	24A	1
1B	2	24B	2
2A	1	25A	1
2B	5	25B	2
3A	1	26A	1
3B	5	26B	8
4A	1	27A	1
4B	5	27B	8
5A	1	28A	1
5B	2	28B	2
6A	1	29A	3
6B	5	29B	2
7A	1	30A	3
7B	5	30B	5, 9
8A	1	31A	3
8B	2	31B	5
9A	1	32A	1
9B	2	32B	5
10A	1	33A	1
10B	2	33B	5
11A	1	34A	1
11B	2	34B	2
12A	1	35A	1
12B	2	35B	2
13A	1	36A	1
13B	2	36B	5
14A	1	37A	1
14B	2	37B	5
15A	1	38A	1
15B	2	38B	5
16A	1	39A	1
16B	2	39B	5
17A	1	40A	1
17B	2	40B	5
18A	1	41A	1
18B	2	41B	5
19A	1	42A	1
19B	4	42B	6
20A	1	43	2
20B	4	44	7
21A	1		
21B	4, 8		
22A	1		
22B	4, 8		
23A	1		
23B	2		

W2 CAP BEAM CONTINUITY TENDON TABLE-2 FOR "E" LINE

Tendon No.	h	L	e_5	R
2B	-40	2200	500	8000
3B	+40	2200	500	8000
4B	-70	2200	500	8000
6B	-40	2200	500	8000
7B	+40	2200	500	8000
30B	-1210	2400	1200	4000
31B	-978	2400	1200	5000
32B	-763	2400	1200	4000
33B	-470	2400	1200	8000
36B	+40	2200	500	8000
37B	-40	2200	500	8000
39B	-70	2200	500	8000
40B	-90	2200	500	8000
41B	-90	2200	500	8000

Tendon No.	p
15B	-50
16B	-50
30B	+200

W2 CAP BEAM CONTINUITY TENDON TABLE-2 FOR "W" LINE

Tendon No.	h	L	e_5	R
2B	-40	2200	500	8000
3B	+40	2200	500	8000
4B	-70	2200	500	8000
6B	-40	2200	500	8000
7B	+40	2200	500	8000
30B	-1285	-1285	1200	4000
31B	-1053	2400	1200	5000
32B	-795	2400	1200	5000
33B	-515	2400	1200	8000
36B	+40	2200	500	8000
37B	-40	2200	500	8000
38B	+65	2200	500	8000
39B	-130	2200	500	8000
40B	+40	2200	500	8000
41B	-40	2200	500	8000

Tendon No.	p
21B	+100
22B	+100
26B	-50
27B	-50
30B	-200
44	+1200

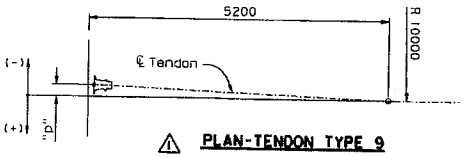

PLAN-TENDON TYPE 9

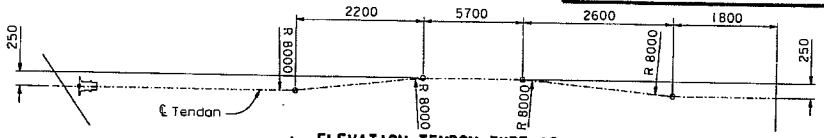

ELEVATION-TENDON TYPE 10

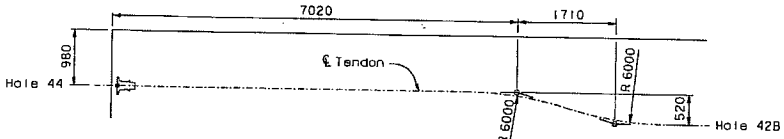

ELEVATION-TENDON TYPE 6

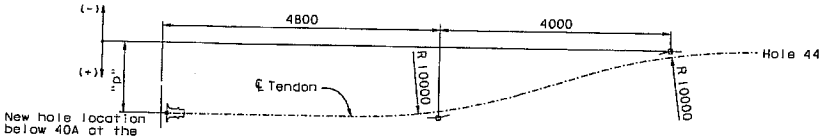

PLAN-TENDON TYPE 7

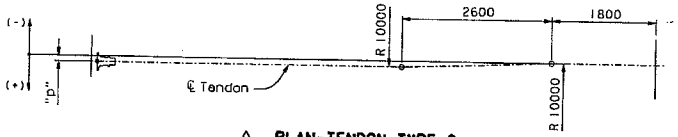

PLAN-TENDON TYPE 8

NOTES:

1. For Type 1 through Type 5 tendon geometry, see "W2 Cap Beam Post-Tensioning Details No. 11" sheet.
2. For general stressing sequence, see "Pier W2 Construction Sequence" sheet.
3. For additional prestressing details, see "Prestressing Notes" sheet.

ALL DIMENSIONS ARE IN MILLIMETERS UNLESS OTHERWISE SHOWN

REGISTERED PROFESSIONAL ENGINEER Vahid P. Duzbaki No. C 64677 Exp. 06/30/07 CIVIL STATE OF CALIFORNIA

FOR REVISIONS ONLY

MARK	DATE	DESCRIPTIONS	BY	CH'D	CCO#
2	01/31/07	CORROSION PROTECTION	JD	AS	16
1	07/21/06	W2 CAP BEAM ISD	JD	NV	23

REVISIONS

CONTRACT CHANGE ORDER NO. 16
SHEET 7 OF 12

100 % PS&E

R. Vaitzadeh/V. Tran/Y.L./N.L./F.C.
DESIGN OVERSIGHT
SIGN OFF DATE 01/31/07
Rev. Date: 5-16-98

DESIGN	BY J. Sun	CHECKED W. Chen	
DETAILS	BY J. Duxbury	CHECKED W. Chen	
QUANTITIES	BY S. Shi	CHECKED D. Harrison	

PREPARED FOR THE STATE OF CALIFORNIA DEPARTMENT OF TRANSPORTATION

R. Manzanarez
PROJECT ENGINEER

ORIGINAL SCALE IN MILLIMETERS FOR REDUCED PLANS 0 10 20 30 40 50 60 70 80 90 100

CU 04
EA 0120F1

BRIDGE NO. 34-0006L/R
KILOMETER POST 13.2/13.9

SAN FRANCISCO OAKLAND BAY BRIDGE
EAST SPAN SEISMIC SAFETY PROJECT
SELF-ANCHORED SUSPENSION BRIDGE
(SUPERSTRUCTURE & TOWER)

W2 CAP BEAM POST-TENSIONING DETAILS NO. 12

DISREGARD PRINTS BEARING EARLIER REVISION DATES

REVISION DATES (PRELIMINARY STAGE ONLY)

SHEET 056R2 OF

FILE => I:\DD\04-0120F1\aas\contract plans and cco\cco\in progress\cco#16\dbcpt12.dgn

DATE PLOTTED => 15 MAR 2007 TIME PLOTTED => 15:30:35

USERNAME => v161fdr

DIST.	COUNTY	ROUTE	KILOMETER POST TOTAL PROJECT	SHEET NO.	TOTAL SHEETS
04	SF	80	13.2/13.9	499R2	1204

REGISTERED ENGINEER - CIVIL

12-6-04
PLANS APPROVAL DATE

REGISTERED PROFESSIONAL ENGINEER John Sun No. C 54648 Exp. 12/31/05 CIVIL STATE OF CALIFORNIA

The State of California or its officers or agents shall not be responsible for the accuracy or completeness of electronic copies of this plan sheet.

T.Y. LIN / MOFFATT & NICHOL
825 BATTERY STREET
SAN FRANCISCO, CA 94111

Caltrans now has a web site! To get to the web site, go to: http://www.dot.ca.gov

Metric

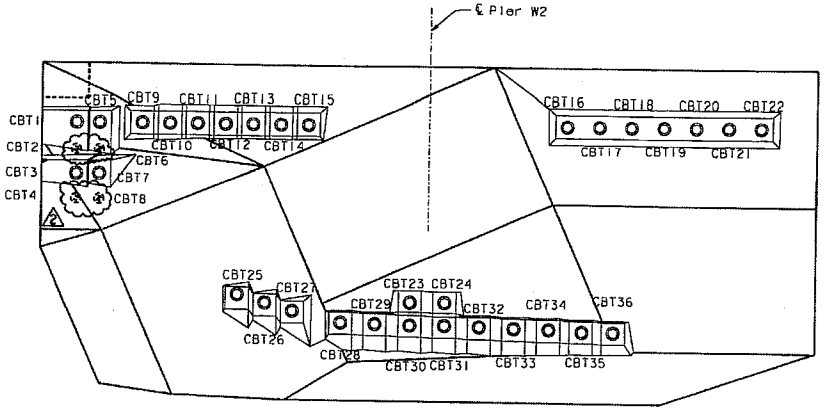

△1 **ELEVATION** 1:50 (Cap beam transverse PT tendons)

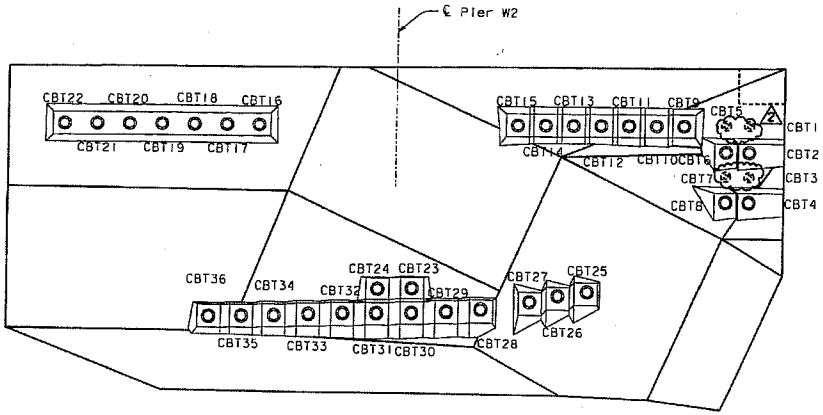

△1 **ELEVATION** 1:50 (Cap beam transverse PT tendons)

CAP BEAM TRANSVERSE PT TENDON BLOCKOUT TABLE

South face		North face	
Tendon	Blockout Detail	Tendon	Blockout Detail
CBT1	R	CBT1	S
CBT2	R	CBT2	S
CBT3	R	CBT3	S
CBT4	R	CBT4	S
CBT5	R	CBT5	S
CBT6	R	CBT6	S
CBT7	R	CBT7	S
CBT8	R	CBT8	S
CBT9	J	CBT9	J
CBT10	J	CBT10	J
CBT11	K	CBT11	K
CBT12	K	CBT12	K
CBT13	K	CBT13	K
CBT14	K	CBT14	K
CBT15	K	CBT15	K
CBT16	L	CBT16	L
CBT17	L	CBT17	L
CBT18	L	CBT18	L
CBT19	L	CBT19	L
CBT20	L	CBT20	L
CBT21	L	CBT21	L
CBT22	L	CBT22	L
CBT23	P	CBT23	P
CBT24	P	CBT24	P
CBT25	M	CBT25	M
CBT26	M	CBT26	M
CBT27	M	CBT27	M
CBT28	N	CBT28	N
CBT29	N	CBT29	N
CBT30	P	CBT30	P
CBT31	P	CBT31	P
CBT32	N	CBT32	N
CBT33	N	CBT33	N
CBT34	N	CBT34	N
CBT35	N	CBT35	N
CBT36	Q	CBT36	Q

REGISTERED PROFESSIONAL ENGINEER D. R. Dunbar No. C 64677 Exp. 06/30/07 CIVIL STATE OF CALIFORNIA

FOR REVISIONS ONLY

MARK	DATE	DESCRIPTIONS	BY	CH'D	CCO#
△2	01/31/07	CORROSION PROTECTION	JD	AS	16
△1	07/21/06	W2 CAP BEAM ISD	JD	NV	23

REVISIONS

CONTRACT CHANGE ORDER NO. 16
SHEET 8 OF 12

NOTES:

1. For Details J through L, see "W2 Cap Beam Blockout Details No.6" sheet.
2. For Details M and N, see "W2 Cap Beam Blockout Details No.7" sheet.
3. For Details P and Q, see "W2 Cap Beam Blockout Details No.8" sheet.
4. For Detail R, see "W2 Cap Beam Blockout Details No.9" sheet.
5. For Detail S, see "W2 Cap Beam Blockout Details No.10" sheet.
6. For additional prestressing details, see "Prestressing Notes" sheet.

100 % PS&E

DATE PLOTTED => 15 MAR 2007 TIME PLOTTED => 15:32:24

USERNAME => vvisitor

ALL DIMENSIONS ARE IN MILLIMETERS UNLESS OTHERWISE SHOWN

R. Vafizadeh/V. Toan/Y.L./N.L./F.C.
DESIGN OVERSIGHT
SIGN OFF DATE 01/31/07
Rev. Date: 5-13-98

DESIGN	BY J. Sun	CHECKED M. Chen	
DETAILS	BY J. Duxbury	CHECKED M. Chen	
QUANTITIES	BY S. Shi	CHECKED D. Harrison	

ORIGINAL SCALE IN MILLIMETERS FOR REDUCED PLANS 0 10 20 30 40 50 60 70 80 90 100

PREPARED FOR THE STATE OF CALIFORNIA DEPARTMENT OF TRANSPORTATION

R. Manzanarez
PROJECT ENGINEER

BRIDGE NO. 34-0006L/R
KILOMETER POST 13.2/13.9

CU 04
EA 0120F1

DISREGARD PRINTS BEARING EARLIER REVISION DATES

FILE => I:\bb\04-012001\sos\contract plans and ccs\cco\in progress\cco=16\ccdb02.dgn

SAN FRANCISCO OAKLAND BAY BRIDGE
EAST SPAN SEISMIC SAFETY PROJECT
SELF-ANCHORED SUSPENSION BRIDGE
(SUPERSTRUCTURE & TOWER)

W2 CAP BEAM BLOCKOUT DETAILS NO. 2

REVISION DATES (PRELIMINARY STAGE ONLY)

SHEET 82R2 OF

DIST.	COUNTY	ROUTE	KILOMETER POST TOTAL PROJECT	SHEET NO.	TOTAL SHEETS
04	SF	80	13.2/13.9	506R2	1204

REGISTERED ENGINEER - CIVIL

12-6-04

PLANS APPROVAL DATE

REGISTERED PROFESSIONAL ENGINEER John Sun No. C 54648 Exp. 12/31/05 CIVIL STATE OF CALIFORNIA

The State of California or its officers or agents shall not be responsible for the accuracy or completeness of electronic copies of this plan sheet.

T.Y. LIN / MOFFATT & NICHOL
825 BATTERY STREET
SAN FRANCISCO, CA 94111

Caltrans now has a web site! To get to the web site, go to: http://www.dot.ca.gov

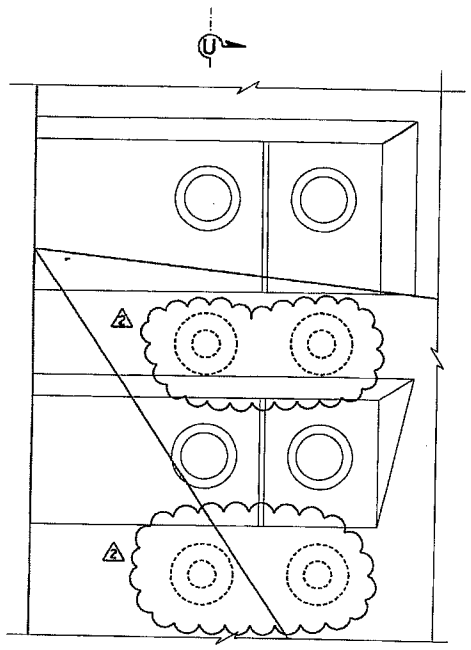

DETAIL R
1:10

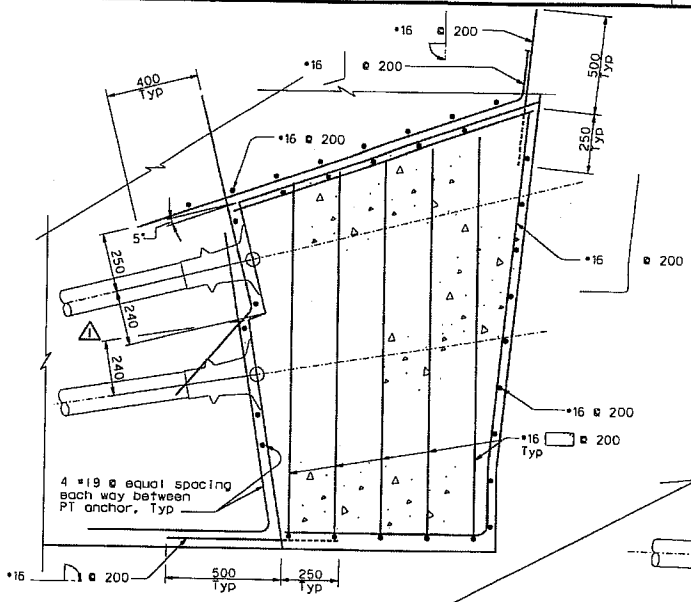

SECTION V-V
1:10

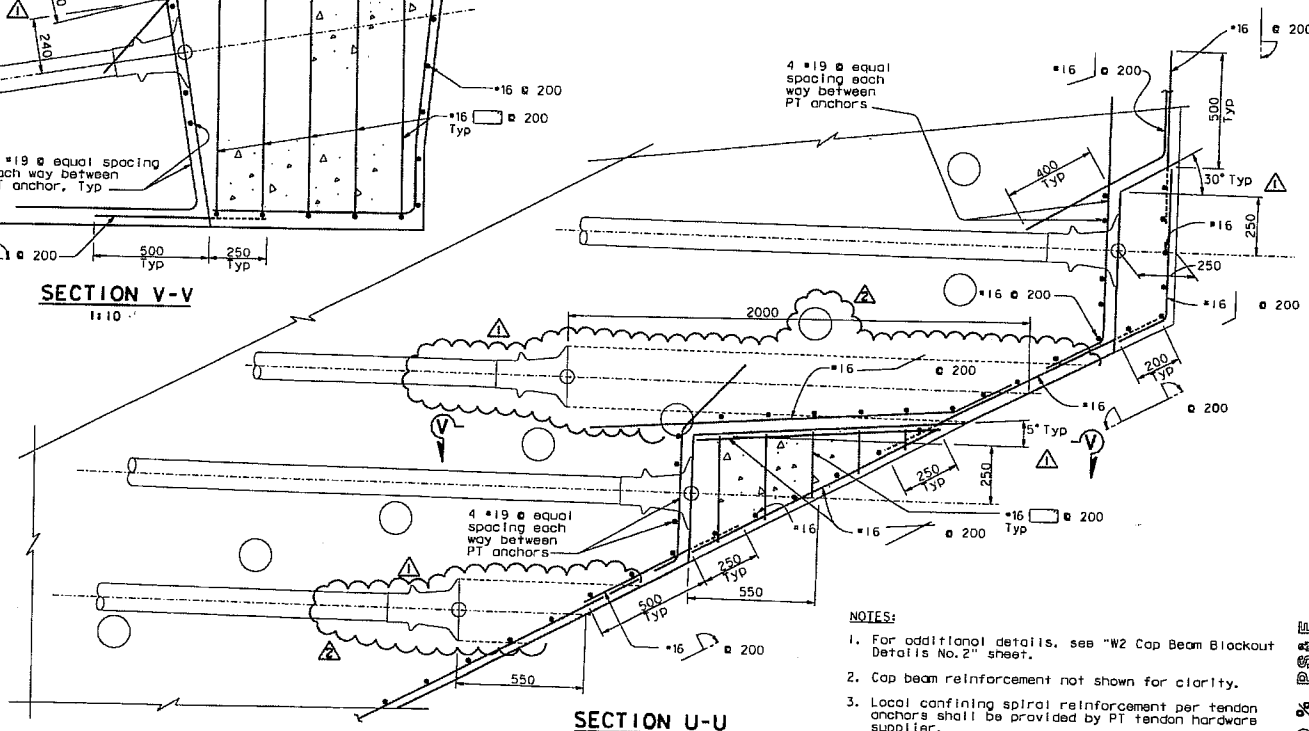

SECTION U-U
1:10

NOTES:

1. For additional details, see "W2 Cap Beam Blockout Details No.2" sheet.
2. Cap beam reinforcement not shown for clarity.
3. Local confining spiral reinforcement per tendon anchors shall be provided by PT tendon hardware supplier.

REGISTERED PROFESSIONAL ENGINEER Bahram D. Dusbury No. C 64677 Exp. 06/30/07 CIVIL STATE OF CALIFORNIA

FOR REVISIONS ONLY

MARK	DATE	DESCRIPTIONS	BY	CH'D	CCO#
2	01/31/07	CORROSION PROTECTION	JD	NV	16
1	07/21/06	W2 CAP BEAM ISD	JD	NV	23

REVISIONS

CONTRACT CHANGE ORDER NO. 16
SHEET 9 OF 12

ALL DIMENSIONS ARE IN MILLIMETERS UNLESS OTHERWISE SHOWN

R. Yalizadeh/Y. Tsao/Y.L./W.L./F.C.
DESIGN OVERSIGHT
Roya Yalizadeh / Yung Tsao / Y Liu
STOP DATE 01/31/07

Rev. Date: 5-16-98

DESIGN	BY J. Sun	CHECKED M. Chen	
DETAILS	BY J. Duxbury	CHECKED M. Chen	
QUANTITIES	BY S. Shi	CHECKED D. Harrison	

PREPARED FOR THE STATE OF CALIFORNIA DEPARTMENT OF TRANSPORTATION

R. Manzanarez
PROJECT ENGINEER

BRIDGE NO. 34-0006L/R
KILOMETER POST 13.2/13.9

CU 04
EA 0120F1

ORIGINAL SCALE IN MILLIMETERS FOR REDUCED PLANS 0 10 20 30 40 50 60 70 80 90 100

DIMECARD PRINTS BEARING EARLIER REVISION DATES

REVISION DATES (PRELIMINARY STAGE ONLY) 01/31/07 07/21/06 12/13/05

SAN FRANCISCO OAKLAND BAY BRIDGE
EAST SPAN SEISMIC SAFETY PROJECT
SELF-ANCHORED SUSPENSION BRIDGE
(SUPERSTRUCTURE & TOWER)

W2 CAP BEAM BLOCKOUT DETAILS NO. 9

SHEET 89R2 OF

FILE => I:\bb\04-012001\aos\contract plans and cco\cco\in progress\cco#16\aacbb09.dgn

USERNAME => visitor DATE PLOTTED => 15 MAR 2007 TIME PLOTTED => 15:33:45

100 % PS&E

DIST.	COUNTY	ROUTE	KILOMETER POST TOTAL PROJECT	SHEET NO.	TOTAL SHEETS
04	SF	80	13.2/13.9	507R2	1204

REGISTERED ENGINEER - CIVIL

12-6-04
PLANS APPROVAL DATE

REGISTERED PROFESSIONAL ENGINEER John Sun No. C 54648 Exp. 12/31/05 CIVIL STATE OF CALIFORNIA

The State of California or its officers or agents shall not be responsible for the accuracy or completeness of electronic copies of this plan sheet.

T.Y. LIN / MOFFATT & NICHOL
825 BATTERY STREET
SAN FRANCISCO, CA 94111

Caltrans now has a web site! To get to the web site, go to: http://www.dot.ca.gov

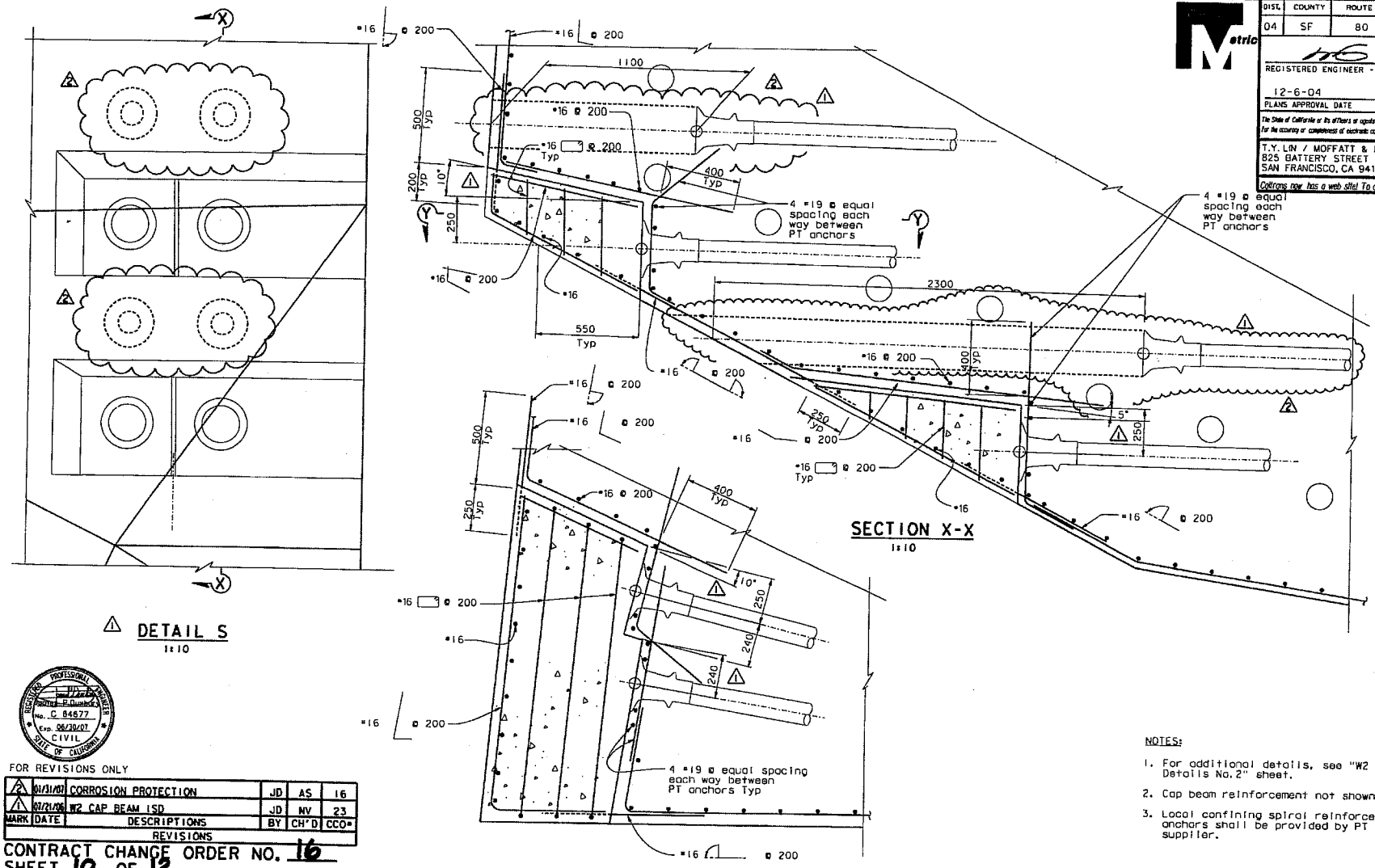

FOR REVISIONS ONLY

MARK	DATE	DESCRIPTIONS	BY	CH'D	CCO#
2	01/31/07	CORROSION PROTECTION	JD	AS	16
1	07/21/06	W2 CAP BEAM ISD	JD	NV	23

REVISIONS

CONTRACT CHANGE ORDER NO. 16
SHEET 10 OF 12

REGISTERED PROFESSIONAL ENGINEER Rodney P. Duxbury No. C 84677 Exp. 06/30/07 CIVIL STATE OF CALIFORNIA

NOTES:

1. For additional details, see "W2 Cap Beam Blockout Details No.2" sheet.
2. Cap beam reinforcement not shown for clarity.
3. Local confining spiral reinforcement per tendon anchors shall be provided by PT tendon hardware supplier.

ALL DIMENSIONS ARE IN MILLIMETERS UNLESS OTHERWISE SHOWN

R. Vallizadeh/Y. Toan/Y.L./W.L./F.C.
DESIGN OVERSIGHT
SIGN OFF DATE 01/31/07
Rev. Date: 5-18-98

	BY	CHECKED
DESIGN	J. Sun	M. Chen
DETAILS	J. Duxbury	M. Chen
QUANTITIES	S. Shi	D. Harrison

PREPARED FOR THE STATE OF CALIFORNIA DEPARTMENT OF TRANSPORTATION

R. Manzanarez
PROJECT ENGINEER

BRIDGE NO. 34-0006L/R
KILOMETER POST 13.2/13.9
CU 04
EA 0120F1

SAN FRANCISCO OAKLAND BAY BRIDGE
EAST SPAN SEISMIC SAFETY PROJECT
SELF-ANCHORED SUSPENSION BRIDGE
(SUPERSTRUCTURE & TOWER)

W2 CAP BEAM BLOCKOUT DETAILS NO. 10

DISREGARD PRINTS BEARING EARLIER REVISION DATES

REVISION DATES (PRELIMINARY STAGE ONLY)

SHEET 9082 OF

ORIGINAL SCALE IN MILLIMETERS FOR REDUCED PLANS 0 10 20 30 40 50 60 70 80 90 100

FILE => I:\bb\04-01200\sos\contract plans and ccos\cco\in progress\cco#16\necbb10.dgn

USERNAME => jvisitor DATE PLOTTED => 15 MAR 2007 TIME PLOTTED => 15:34:45

100 % PSAE

DIST.	COUNTY	ROUTE	KILOMETER POST TOTAL PROJECT	SHEET NO.	TOTAL SHEETS
04	SF	80	13.2/13.9	508R2	1204

REGISTERED ENGINEER - CIVIL

12-6-04
PLANS APPROVAL DATE

REGISTERED PROFESSIONAL ENGINEER John Sun No. C 54648 Exp. 12/31/05 CIVIL STATE OF CALIFORNIA

The State of California or its officers or agents shall not be responsible for the accuracy or completeness of electronic copies of this plan sheet.

T.Y. LIN / MOFFATT & NICHOL
825 BATTERY STREET
SAN FRANCISCO, CA 94111

Caltrans now has a web site! To get to the web site, go to: http://www.dot.ca.gov

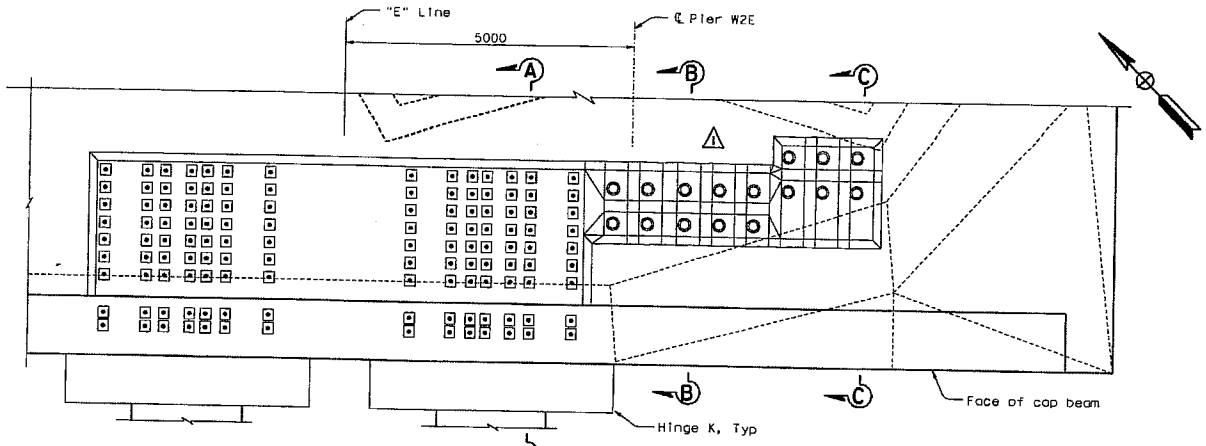

PLAN
1:40
(36 Dia post-tension rod and 12-15 Dia strand tendon blockouts)

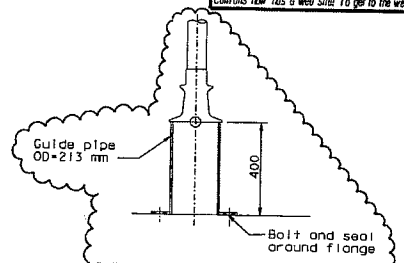

DEAD END GUIDE PIPE
NTS (see Note 6)

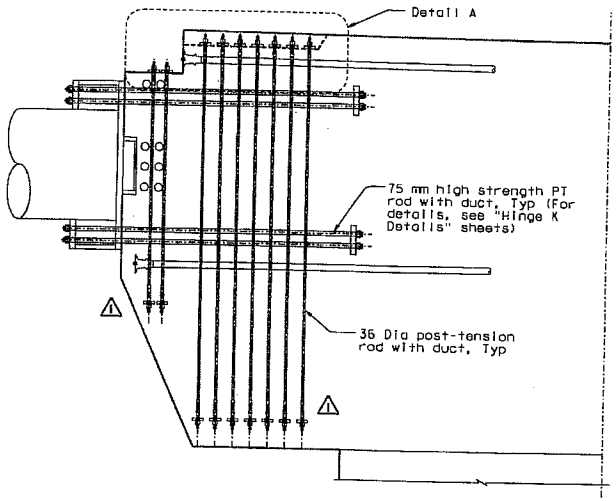

SECTION A-A
1:40

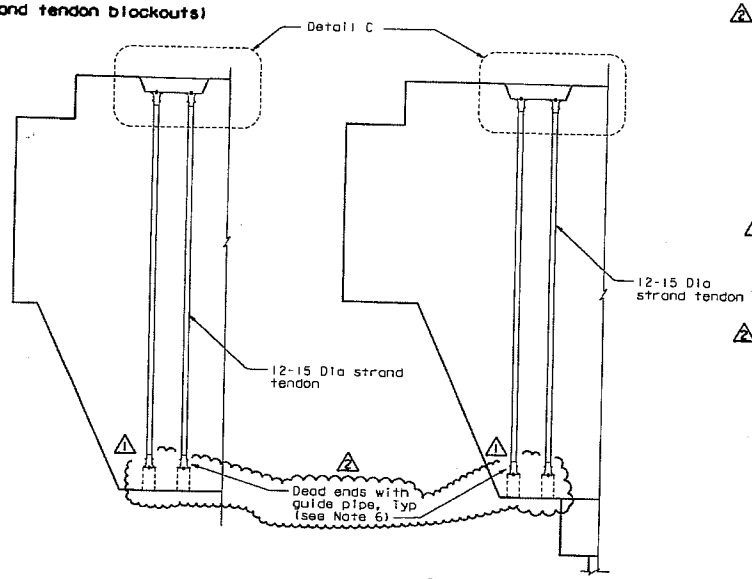

SECTION B-B
1:40

SECTION C-C
1:40

ALL DIMENSIONS ARE IN MILLIMETERS UNLESS OTHERWISE SHOWN

NOTES:

1. Cap beam reinforcement not shown for clarity.
2. Local confining spiral reinforcement for tendon anchors shall be provided by PT tendon hardware supplier.
3. Blockouts on the cap beam "E" Line shown, blockouts on the cap beam "W" Line similar.
4. (1) For Details A and C, see "W2 Cap Beam Blockout Details No. 12" sheet.
5. For additional prestressing details, see "Prestressing Notes" sheet.
6. (2) Contractor shall coordinate the dead end guide pipe details with the PT Supplier and shall submit them to the Engineer for review and approval. Contractor shall grout the guide pipe after stressing operations have been completed.

REGISTERED PROFESSIONAL ENGINEER Walter R. Zwienenberg No. C 64677 Exp. 06/30/07 CIVIL STATE OF CALIFORNIA

FOR REVISIONS ONLY

MARK	DATE	DESCRIPTIONS	BY	CH'D	CCO#
2	01/31/07	CORROSION PROTECTION	JD	AS	16
1	07/21/06	W2 CAP BEAM ISD	JD	NV	23

REVISIONS

CONTRACT CHANGE ORDER NO. 16
SHEET 11 OF 12

100 % PS&E

R. Valizadeh/V. Tran/Y.L./W.L./F.C.
DESIGN OVERSIGHT
Ron Valizadeh / Vang Tran / Y. Liu
SIGN OFF DATE 01/31/07
Rev. Date: 5-16-98

DESIGN	BY J. Sun	CHECKED M. Chen	
DETAILS	BY J. Duxbury	CHECKED M. Chen	
QUANTITIES	BY S. Shi	CHECKED D. Harrison	

ORIGINAL SCALE IN MILLIMETERS FOR REDUCED PLANS 0 10 20 30 40 50 60 70 80 90 100

PREPARED FOR THE STATE OF CALIFORNIA DEPARTMENT OF TRANSPORTATION

R. Manzanarez
PROJECT ENGINEER

CU 04
EA 0120F1

BRIDGE NO. 34-0006L/R
KILOMETER POST 13.2/13.9

SAN FRANCISCO OAKLAND BAY BRIDGE
EAST SPAN SEISMIC SAFETY PROJECT
SELF-ANCHORED SUSPENSION BRIDGE
(SUPERSTRUCTURE & TOWER)

W2 CAP BEAM BLOCKOUT DETAILS NO. 11

DISREGARD PRINTS BEARING EARLIER REVISION DATES

REVISION DATES (PRELIMINARY STAGE ONLY)

SHEET 91R2

FILE => I:\bb\04-0120f1\scs\contract plans and cco\cco\in progress\cco#16\oacbb11.dgn

USERNAME => pwilliar DATE PLOTTED => 15 MAR 2007 TIME PLOTTED => 15:35:58

DIST.	COUNTY	ROUTE	KILOMETER POST TOTAL PROJECT	SHEET NO.	TOTAL SHEETS
04	SF	80	13.2/13.9	509R2	1204

REGISTERED ENGINEER - CIVIL
12-6-04
PLANS APPROVAL DATE
REGISTERED PROFESSIONAL ENGINEER John Sun No. C 54648 Exp. 12/31/05 CIVIL STATE OF CALIFORNIA

The State of California or its officers or agents shall not be responsible for the accuracy or completeness of electronic copies of this plan sheet.

T.Y. LIN / MOFFATT & NICHOL
825 BATTERY STREET
SAN FRANCISCO, CA 94111

Caltrans now has a web site! To get to the web site, go to: http://www.dot.ca.gov

For additional hinge K expansion joint reinforcement, see "Hinge K Expansion Joint Details" sheets

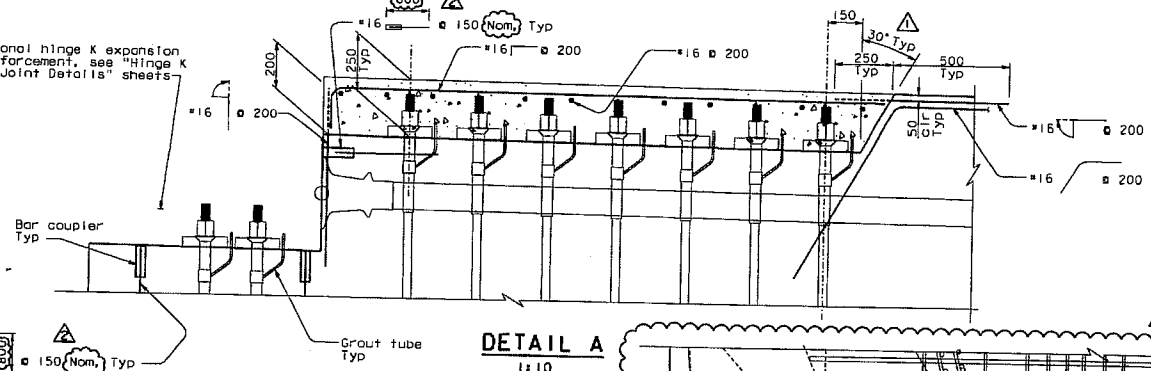

DETAIL A
1:10

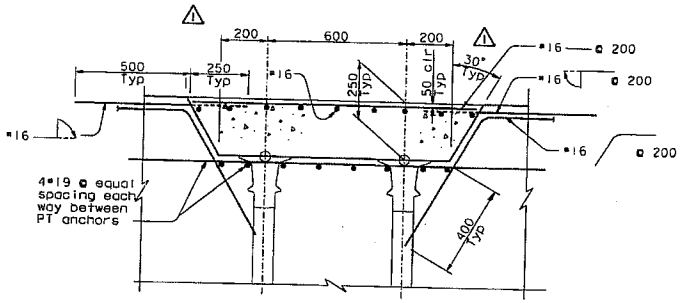

DETAIL C
1:10

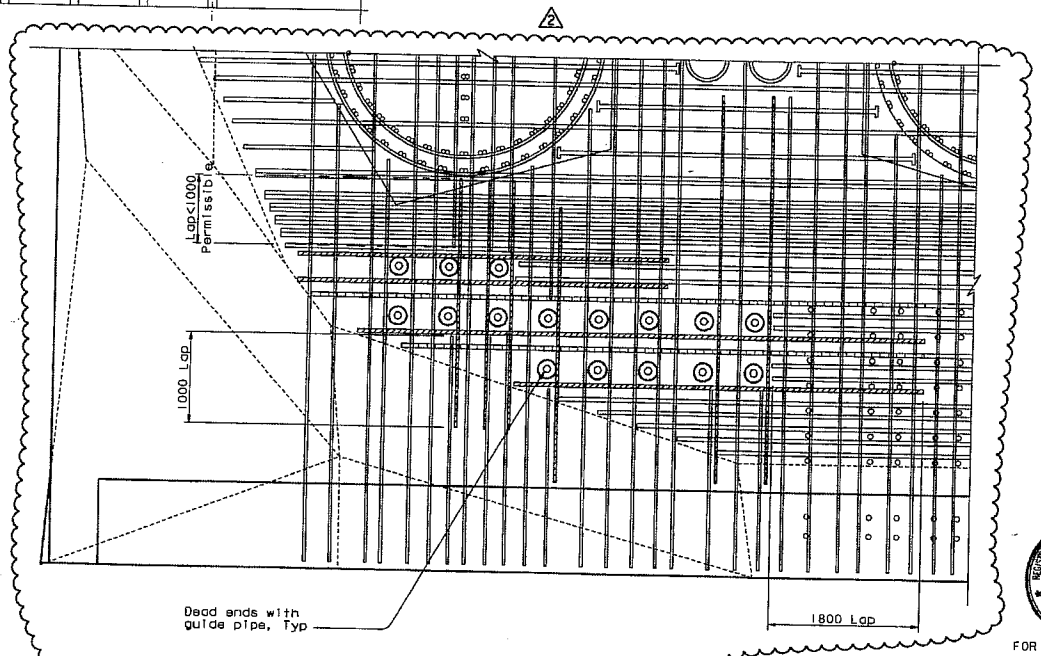

DEAD END GUIDE PIPE BOTTOM MAT REINFORCEMENT ALTERNATE
NTS

NOTES:

1. For additional details, see "W2 Cap Beam Blockout Details No. 11" sheet.
2. Cap beam reinforcement not shown for clarity.
3. Local confining spiral reinforcement per tendon anchors shall be provided by PT tendon hardware supplier.

REGISTERED PROFESSIONAL ENGINEER John S. Duxbury No. C 64677 Exp. 06/30/07 CIVIL STATE OF CALIFORNIA

FOR REVISIONS ONLY

MARK	DATE	DESCRIPTIONS	BY	CH'D	CCO#
2	01/31/07	CORROSION PROTECTION	JD	AS	16
1	01/21/06	W2 CAP BEAM ISO	JD	NV	23

REVISIONS

CONTRACT CHANGE ORDER NO. 16
SHEET 12 OF 12

100 % PS&E

ALL DIMENSIONS ARE IN MILLIMETERS UNLESS OTHERWISE SHOWN

R. Vollzodeh/V. Toon/Y.L./N.L./F.C.
DESIGN OVERSIGHT
Roya Vollzodeh / Vong Toon / Y Liu
SIGN OFF DATE 01/31/07
Rev. Date: 3-12-96

DESIGN	BY J. Sun	CHECKED M. Chen	
DETAILS	BY J. Duxbury	CHECKED M. Chen	
QUANTITIES	BY S. Shi	CHECKED D. Harrison	

ORIGINAL SCALE IN MILLIMETERS FOR REDUCED PLANS 0 10 20 30 40 50 60 70 80 90 100

PREPARED FOR THE STATE OF CALIFORNIA DEPARTMENT OF TRANSPORTATION

R. Manzanarez
PROJECT ENGINEER

BRIDGE NO. 34-0006L/R
KILOMETER POST 13.2/13.9
CU 04
EA 0120F1

SAN FRANCISCO OAKLAND BAY BRIDGE
EAST SPAN SEISMIC SAFETY PROJECT
SELF-ANCHORED SUSPENSION BRIDGE
(SUPERSTRUCTURE & TOWER)

W2 CAP BEAM BLOCKOUT DETAILS NO. 12

DISREGARD PRINTS BEARING EARLIER REVISION DATES
REVISION DATES (PRELIMINARY STAGE ONLY) 01/07/04 10/06/05 12/15/05 12/11/06
SHEET 92R2 OF

FILE => I:\bb\04-0120f1\sas\contract plans and cco\cco\in progress\cco#16\oecbb12.dgn

USERNAME => jvistor DATE PLOTTED => 15 MAR 2007 TIME PLOTTED => 15:31:14

STATE OF CALIFORNIA - DEPARTMENT OF TRANSPORTATION

CONTRACT CHANGE ORDER MEMORANDUM

DATE: 8/23/2007 Page 1 of 1

TO: Pete Siegenthaler, Prin. TE / Gary Pursell, P.E., Sup T.E.	FILE: E.A. 04 - 0120F4
FROM: Gary Pursell, P.E., Sup.T.E.	CO-RTE-PM SF-80-13.2/13.9
	FED. NO.
CCO#: 16 SUPPLEMENT#: 0 Category Code: CHPA	CONTINGENCY BALANCE (incl. this change) $141,169,525.58
COST: $103,488.71 INCREASE ☑ DECREASE ☐	HEADQUARTERS APPROVAL REQUIRED? ☐ YES ☑ NO
SUPPLEMENTAL FUNDS PROVIDED: $0.00	IS THIS REQUEST IN ACCORDANCE WITH ENVIRONMENTAL DOCUMENTS? ☑ YES ☐ NO
CCO DESCRIPTION: W2-Tendon Block-Out Details (Corr Prev)	**PROJECT DESCRIPTION:** CONSTRUCT SELF-ANCHORED SUSPENSION BRIDGE

Original Contract Time:	Time Adj. This Change:	Previously Approved CCO Time Adjustments:	Percentage Time Adjusted: (including this change)	Total # of Unreconciled Deferred Time CCO(s): (including this change)
2490 Day(s)	0 Day(s)	30 Day(s)	1 %	0

THIS CHANGE ORDER PROVIDES FOR:

Adding prestressing anchorage blockouts to the plans and relocating continuity tendons away from the added blockout at the W2 Cap Beam.

This change order mitigates the potential of corrosion during stage construction in the seven wire strands at the W2 Cap Beam. Based on the stressing sequence and because the listed tendons have a "Dead End" on one end, the Contractor is required to install the tendons along with all the ancillary hardware prior to any concrete being poured. Unless sealed from the environment, this implies that the un-grouted tendons may be exposed for a prolong period. The blockouts mitigate this issue.

Payment for this work will be done at Adjustment of Compensation at Lump Sum in the amount of $103,488.71, which can be financed from the contingency fund. A detailed cost analysis is on file.

No time adjustment is warranted, as this change order does not affect the controlling operation.

This change order was approved by the Engineer on August 23, 2007.

CONCURRED BY:

Construction Engineer:	Res. Eng., Gary Pursell, Sup. TE	Date 11/14/06
Bridge Engineer:	Struct Rep, Rick Morrow, Sup TE	Date 11/13/06
Project Engineer:	CT Oversight, Reza Valizadeh, P.E	Date 4/5/07
Project Manager:	Proj Manager, Ken Terpstra	Date 3/15/07
FHWA Rep.:		Date
Environmental:	PCE, Pete Siegenthaler, Prin TE	Date 12/13/06
Other (specify):	Design of Record, Marwan Nader,	Date 11/6/06
Other (specify):	Struct Maint, Bill Zanetich, P.E.	Date 4/5/07
District Prior Approval By:		Date
HQ (Issue Approve) By:		Date
Resident Engineer's Signature:	Gary Pursell	Date 8/23/07

ESTIMATE OF COST

	THIS REQUEST	TOTAL TO DATE
ITEMS	$0.00	$0.00
FORCE ACCOUNT	$0.00	$0.00
AGREED PRICE	$0.00	$0.00
ADJUSTMENT	$103,488.71	$103,488.71
TOTAL	$103,488.71	$103,488.71

FEDERAL PARTICIPATION

☐ PARTICIPATING ☐ PARTICIPATING IN PART ☑ NONE
☐ NON-PARTICIPATING (MAINTENANCE) ☐ NON-PARTICIPATING

FEDERAL SEGREGATION (if more than one Funding Source or P.I.P. type)
☑ CCO FUNDED PER CONTRACT ☐ CCO FUNDED AS FOLLOWS

FEDERAL FUNDING SOURCE	PERCENT

ADA Notice: For individuals with sensory disabilities, this document is available in alternate formats. For information call: (916) 654-6410 or TDD (916) 654-3880 or write Records and Forms Management, 1120 N Street, MS-89, Sacramento, CA 95814.

STATE OF CALIFORNIA - DEPARTMENT OF TRANSPORTATION

CONTRACT CHANGE ORDER

Change Requested by: Engineer

CCO: 7 Suppl. No. 0 Contract No. 04 - 0120F4 Road SF-80-13.2/13.9 FED. AID LOC.:

To: AMERICAN BRIDGE/FLUOR ENTERPRISES INC A JOINT VENTURE

You are directed to make the following changes from the plans and specifications or do the following described work not included in the plans and specifications for this contract. ***NOTE: This change order is not effective until approved by the Engineer.***

Description of work to be done, estimate of quantities and prices to be paid. (Segregate between additional work at contract price, agreed price and force account.) Unless otherwise stated, rates for rental of equipment cover only such time as equipment is actually used and no allowance will be made for idle time. This last percentage shown is the net accumulated increase or decrease from the original quantity in the Engineer's Estimate.

Extra Work at Lump Sum:

Provide bidders compensation per Section 2-1.09, "Bidders Compensation," of the Special Provisions. The Department will compensate the Contractor for bidders compensation and will reimburse the Contractor for payment of bidders compensation to the second low bidder, in conformance with the provisions of Section 9-1.03B, except that no mark up will be added.

Low bidder American Bridge/Flour Enterprises Inc. a Joint Venture shall be compensated the lump sum amount of $5,000,000.00. This sum constitutes full compensation, including markups.

The Department has made a determination that the bid for the second low bidder, Kiewit/Koch/Skanska/Manson a Joint Venture, was responsive and therefore the second low bidder is eligible for bidders compensation in the amount of $5,000,000.00.

The Contractor shall provide the Department proof of payment to the second low bidder by invoices in accordance with the provisions of Section 9-1.03B, "Work Performed by Special Forces or Other Special Services," of the Standard Specifications within 5 days of the payments. The Department will issue compensation for the second low bidder on the next progress pay estimate following receipt of proof of payment.

No third low bid was received by the Department, therefore no eligible third low bidder qualifies for compensation under the contract terms.

Total cost of Extra Work at Lump Sum $10,000,000.00

Estimated Cost: Increase ✓ Decrease ☐ $10,000,000.00

By reason of this order the time of completion will be adjusted as follows: 0 days

Submitted by

Signature	Resident Engineer: GARY PURSELL	Date 5/8/06

Approval Recommended by

Signature	Construction Engineer: GARY PURSELL	Date 5/8/06

Engineer Approval by

Signature	(Print name and title) PETER SIEGENTHALER - Chief	Date 5/11/06

We the undersigned contractor, have given careful consideration to the change proposed and agree, if this proposal is approved, that we will provide all equipment, furnish the materials, except as may otherwise be noted above, and perform all services necessary for the work above specified, and will accept as full payment therefor the prices shown above.

NOTE: If you, the contractor, do not sign acceptance of this order, your attention is directed to the requirements of the specifications as to proceeding with the ordered work and filing a written protest within the time therein specified.

Contractor Acceptance by

Signature	(Print name and title) Michael D. Flowers, Project Director	Date 5/9/06

STATE OF CALIFORNIA - DEPARTMENT OF TRANSPORTATION

CONTRACT CHANGE ORDER MEMORANDUM

DATE: 5/5/2006 Page 1 of 1

TO: PETER SIEGENTHALER / GARY PURSELL	FILE: **E.A.** 04 - 0120F4
FROM: GARY PURSELL	**CO-RTE-PM** SF-80-13.2/13.9
	FED. NO.
CCO#: **7** SUPPLEMENT#: **0** Category Code: **AWZZ**	CONTINGENCY BALANCE (incl. this change) **$0.00**
COST: **$10,000,000.00** INCREASE ☑ DECREASE ☐	HEADQUARTERS APPROVAL REQUIRED? ☐ YES ☑ NO
SUPPLEMENTAL FUNDS PROVIDED: **$10,000,000.00**	IS THIS REQUEST IN ACCORDANCE WITH ENVIRONMENTAL DOCUMENTS? ☑ YES ☐ NO
CCO DESCRIPTION: Bidders Compensation	**PROJECT DESCRIPTION:** CONSTRUCT SELF-ANCHORED SUSPENSION BRIDGE WITH CABLE

LOCATION: IN SAN FRANCISCO COUNTY IN SAN FRANCISCO FROM 0.6 KM TO 1.3 KM EAST OF THE YERBA BUENA TUNNEL EAST PORTAL

THIS CHANGE ORDER PROVIDES FOR:

Providing bidders compensation per Section 2-1.09, "Bidders Compensation," of the Special Provisions. The Department shall compensate the Contractor for payment of bidders compensation to the second and third low bidders in conformance with the provisions of Section 9-1.03B, except that no mark up will be added, and the Department will pay the Contractor $5,000,000 as bidder compensation to the low bidder.

Low bidder American Bridge/Flour Enterprises Inc. a Joint Venture shall be compensated the sum of $5,000,000.00; this sum constitutes full compensation, including markups. Second low bidder Kiewit/Koch/Skanska/Manson a Joint Venture shall be compensated the sum of $5,000,000.00; this sum constitutes full compensation, including markups. Refer to four attached memorandums attesting to second low bidder compensation eligibility. No third low bid was received by the Department, therefore no eligible third low bidder qualifies for compensation under the contract terms.

This work is not covered by any contract items. Therefore, payment for the Extra Work will be a Lump Sum of $10,000,000.00, which can be financed from supplemental funds of which $15,000,000.00 were allotted for this work.

Total cost of Extra Work at Lump Sum $10,000,000.00

No detailed cost analysis is warranted since this compensation amount is detailed in Section 2-1.09, "Bidders Compensation," of the Special Provisions.

No adjustment of contract time is warranted, as this change does not affect the controlling operation.

CONCURRED BY:

Construction Engineer:	Gary Pursell GP	Date 5/5/2006
Bridge Engineer:		Date
FHWA Representative:		Date
Project Engineer:		Date
Other (specify):		Date
		Date
		Date
District Prior Approval By:		Date
HQ (Issue Approve) By:		Date
Resident Engineer's Signature:	Gary Pursell	Date 5/8/06

ESTIMATE OF COST

	THIS REQUEST	TOTAL TO DATE
ITEMS	$0.00	$0.00
FORCE ACCOUNT	$0.00	$0.00
AGREED PRICE	$10,000,000.00	$10,000,000.00
ADJUSTMENT	$0.00	$0.00
TOTAL	$10,000,000.00	$10,000,000.00

FEDERAL PARTICIPATION

☐ PARTICIPATING ☐ PARTICIPATING IN PART ☑ NONE
☐ NON-PARTICIPATING (MAINTENANCE) ☐ NON-PARTICIPATING

FEDERAL SEGREGATION (if more than one Funding Source or P.I.P. type)
☐ CCO FUNDED PER CONTRACT ☐ CCO FUNDED AS FOLLOWS

FEDERAL FUNDING SOURCE	PERCENT

49.007

DIST	COUNTY	ROUTE	KILOMETER POST TOTAL PROJECT	SHEET No	TOTAL SHEETS
04	SF	80	13.2/13.9	5R1	1204

Gene V. Lusherovich 12/19/02
REGISTERED CIVIL ENGINEER DATE

PLANS APPROVAL DATE

REGISTERED PROFESSIONAL ENGINEER Gene V. Lusherovich No. C54338 Exp. 12/31/03 CIVIL STATE OF CALIFORNIA

PARSONS BRINCKERHOFF QUADE & DOUGLAS, INC.
303 Second St., Suite 700N
San Francisco, CA 94107-1317

The State of California or its officers or agents shall not be responsible for the accuracy or completeness of electronic copies of this plan sheet.

Caltrans now has a web site! To get to the web site, go to http://www.dot.ca.gov

Caltrans Metric

REGISTERED PROFESSIONAL ENGINEER Mark Grodzki No. C65594 Exp. 9/31/07 CIVIL STATE OF CALIFORNIA

MARK	DATE	DESCRIPTIONS	REV	CK	CCO NO.
1	10/16/06	Removed Matchline Elevations (Revised Elevations)	LR	MG	11

REVISIONS

CONTRACT CHANGE ORDER NO. 11
SHEET 4 OF 13

NOTE:

1. Elevation is based on 1929 National Geodetic Vertical Datum (NGVD).

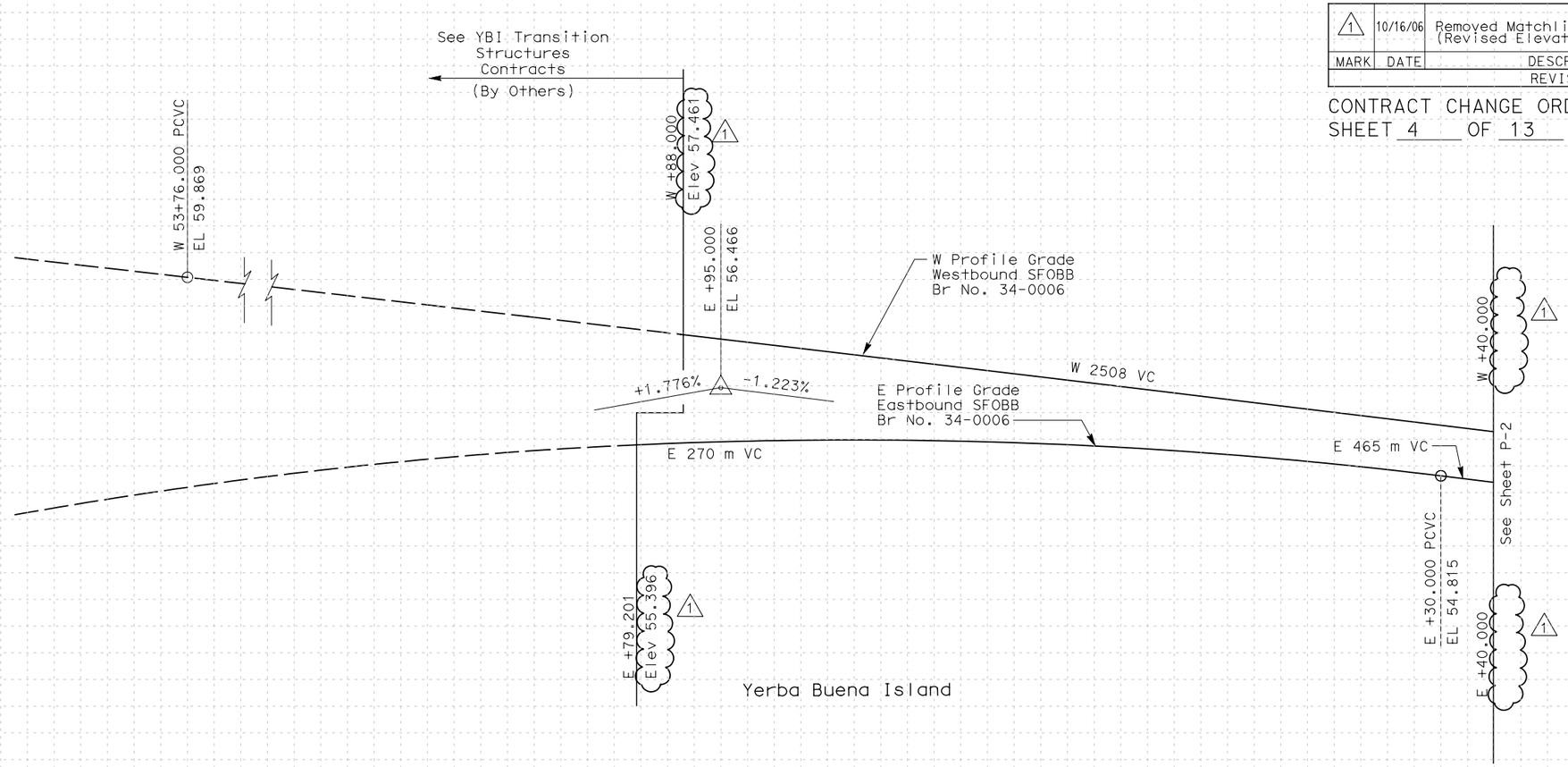

W LINE AND E LINE

ALL DIMENSIONS ARE IN METERS UNLESS OTHERWISE SHOWN

PROFILE

SCALE: 1:500 HORIZ
1:50 VERT

P-1

Station	+80	56+00	+20	+40	+60	+80	57+00	+20	+40	+60
Cu.										
M. Exc.										
M. Emb.										

STATE OF CALIFORNIA - DEPARTMENT OF TRANSPORTATION
Caltrans

DESIGN OVERSIGHT
Bob Zandipour

CALCULATED/DESIGNED BY GVL
CHECKED BY KR
DATE 11/02
REVISED BY
DATE REVISED

LAST REVISION 00-00-00
DATE PLOTTED => $DATE
TIME PLOTTED => $TIME

FOR REDUCED PLANS ORIGINAL SCALE IS IN MILLIMETERS 0 20 40 60 80

USERNAME =>$USER
DGN FILE =>$REQUEST

CU 04251

EA 0120F1

DIST	COUNTY	ROUTE	KILOMETER POST TOTAL PROJECT	SHEET No	TOTAL SHEETS
04	SF	80	13.2/13.9	6R1	1204

Gene V. Lusherovich 12/19/02
REGISTERED CIVIL ENGINEER DATE

PLANS APPROVAL DATE

REGISTERED PROFESSIONAL ENGINEER Gene V. Lusherovich No. C54338 Exp. 12/31/03 CIVIL STATE OF CALIFORNIA

PARSONS BRINCKERHOFF QUADE & DOUGLAS, INC.
303 Second St., Suite 700N
San Francisco, CA 94107-1317

The State of California or its officers or agents shall not be responsible for the accuracy or completeness of electronic copies of this plan sheet.

Caltrans now has a web site! To get to the web site, go to http://www.dot.ca.gov

Caltrans Metric

REGISTERED PROFESSIONAL ENGINEER Mark Grodzki No. C65594 Exp. 9/31/07 CIVIL STATE OF CALIFORNIA

MARK	DATE	DESCRIPTIONS	REV	CK	CCO NO.
1	10/16/06	Removed Matchline Elevations	LR	MG	11

REVISIONS

CONTRACT CHANGE ORDER NO. 11
SHEET 5 OF 13

NOTE:

1. Elevation is based on 1929 National Geodetic Vertical Datum (NGVD).

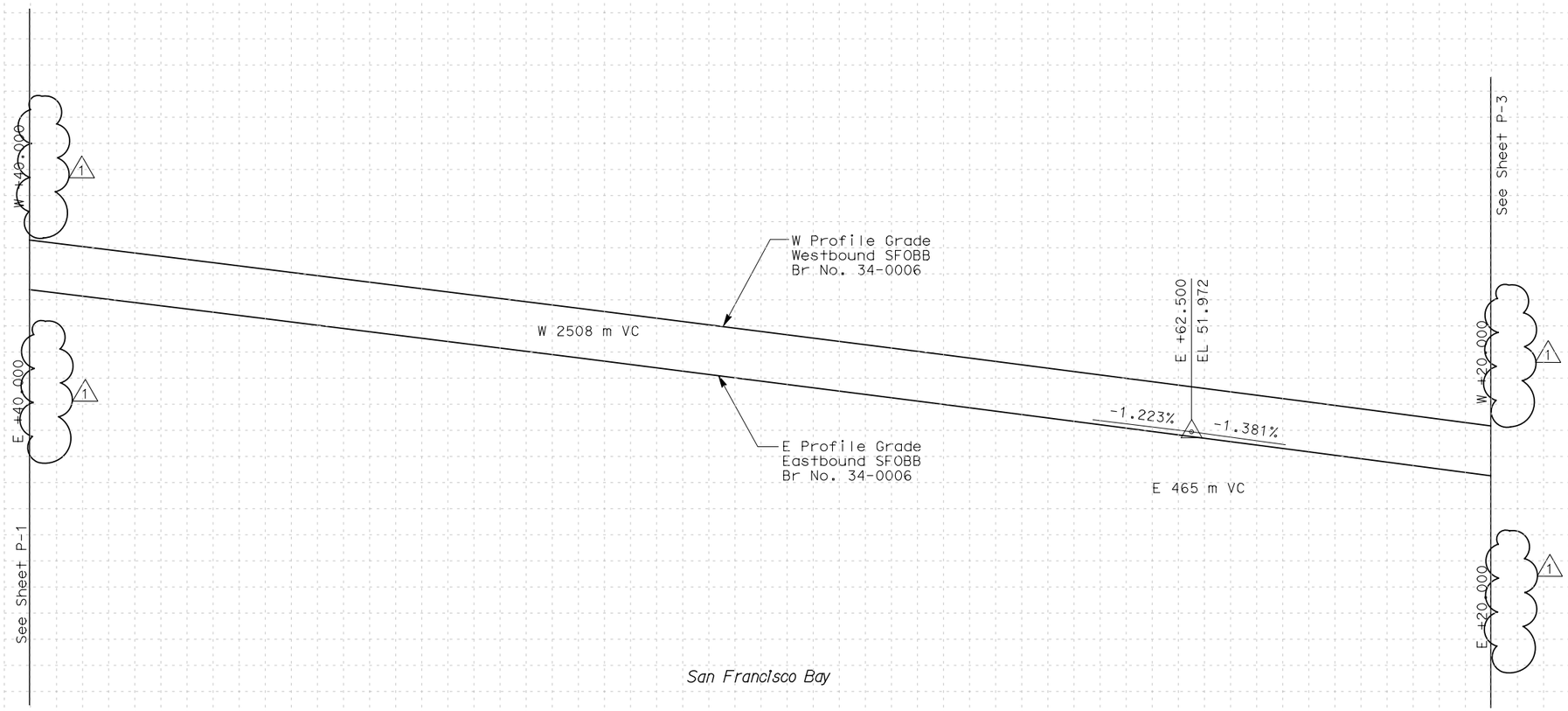

W LINE AND E LINE

ALL DIMENSIONS ARE IN METERS UNLESS OTHERWISE SHOWN

PROFILE

SCALE: 1:500 HORIZ
1:50 VERT

P-2

Station	+40	+60	+80	58+00	+20	+40	+60	+80	59+00	+20	+40	+60	+80	60+00	+20	+40
Cu.																
M. Exc.									0							
M. Emb.									0							

DESIGN OVERSIGHT: Bob Zandipour
CALCULATED/DESIGNED BY: GVL 11/02
CHECKED BY: KR 11/02
REVISED BY / DATE REVISED

STATE OF CALIFORNIA - DEPARTMENT OF TRANSPORTATION
Caltrans

LAST REVISION 00-00-00
DATE PLOTTED => $DATE
TIME PLOTTED => $TIME

FOR REDUCED PLANS ORIGINAL SCALE IS IN MILLIMETERS 0 20 40 60 80

USERNAME =>$USER
DGN FILE =>$REQUEST

CU 04251 EA 0120F1

DIST	COUNTY	ROUTE	KILOMETER POST TOTAL PROJECT	SHEET No	TOTAL SHEETS
04	SF	80	13.2/13.9	7R1	1204

Gene V. Lusherovich 12/19/02
REGISTERED CIVIL ENGINEER DATE

PLANS APPROVAL DATE

REGISTERED PROFESSIONAL ENGINEER Gene V. Lusherovich No. C54338 Exp. 12/31/03 CIVIL STATE OF CALIFORNIA

PARSONS BRINCKERHOFF QUADE & DOUGLAS, INC.
303 Second St., Suite 700N
San Francisco, CA 94107-1317

The State of California or its officers or agents shall not be responsible for the accuracy or completeness of electronic copies of this plan sheet.

Caltrans now has a web site! To get to the web site, go to http://www.dot.ca.gov

Caltrans Metric

NOTE:

1. Elevation is based on 1929 National Geodetic Vertical Datum (NGVD).

REGISTERED PROFESSIONAL ENGINEER Mark Grodzki No. C65594 Exp. 9/31/07 CIVIL STATE OF CALIFORNIA

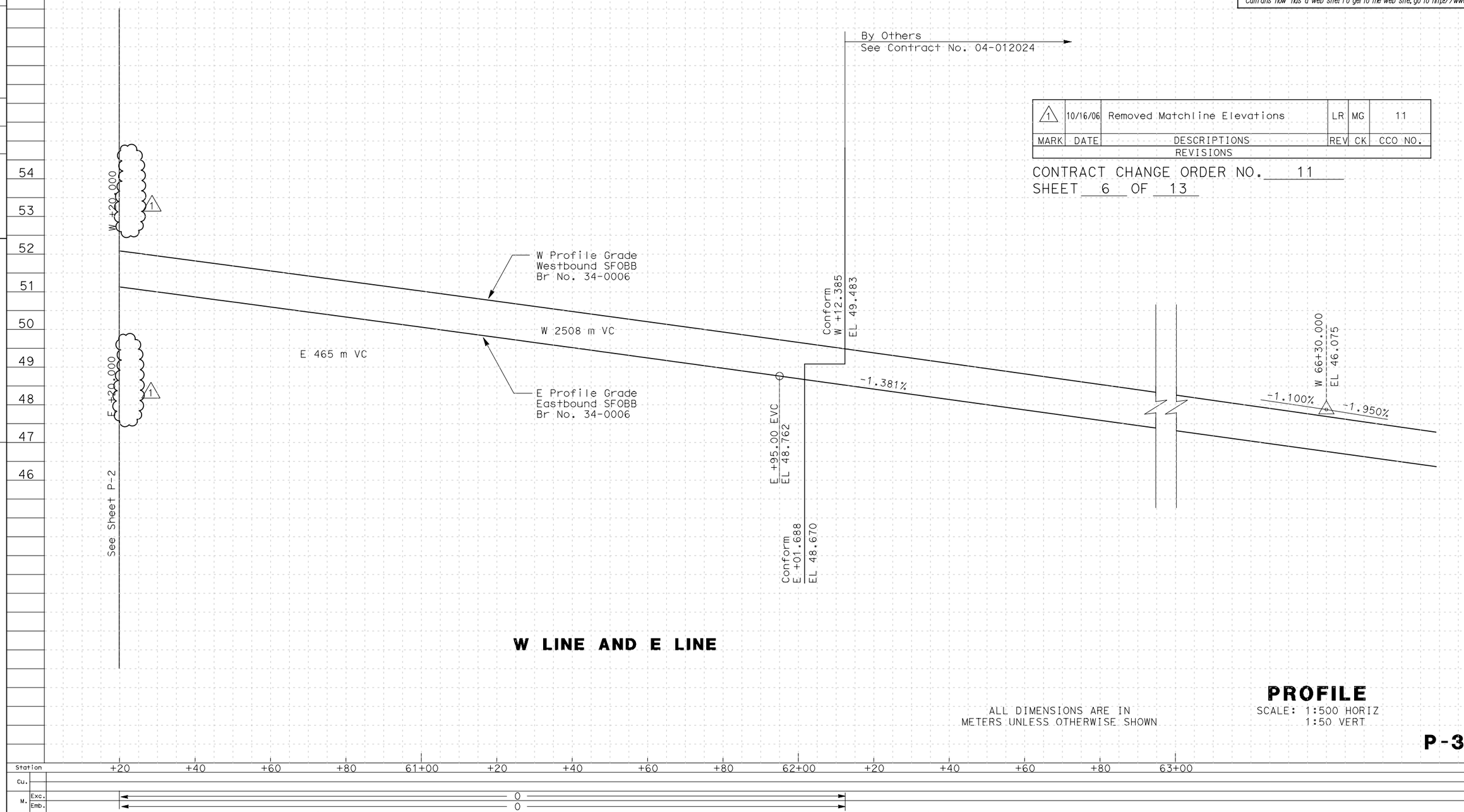

MARK	DATE	DESCRIPTIONS	REV	CK	CCO NO.
1	10/16/06	Removed Matchline Elevations	LR	MG	11

REVISIONS

CONTRACT CHANGE ORDER NO. 11
SHEET 6 OF 13

W LINE AND E LINE

ALL DIMENSIONS ARE IN METERS UNLESS OTHERWISE SHOWN

PROFILE
SCALE: 1:500 HORIZ
1:50 VERT

P-3

STATE OF CALIFORNIA - DEPARTMENT OF TRANSPORTATION
Caltrans

DESIGN OVERSIGHT: Bob Zandipour

CALCULATED/DESIGNED BY: GVL DATE 11/02
CHECKED BY: KR 11/02
REVISED BY
DATE REVISED

LAST REVISION 00-00-00
DATE PLOTTED => $DATE
TIME PLOTTED => $TIME

FOR REDUCED PLANS ORIGINAL SCALE IS IN MILLIMETERS 0 20 40 60 80

USERNAME =>$USER
DGN FILE =>$REQUEST

CU 04251

EA 0120F1

DIST	COUNTY	ROUTE	KILOMETER POST TOTAL PROJECT	SHEET No	TOTAL SHEETS
04	SF	80	13.2/13.9	97R1	1204

Caltrans Metric

Jens Erlingsson 12/19/02
REGISTERED ELECTRICAL ENGINEER DATE

REGISTERED PROFESSIONAL ENGINEER
JENS ERLINGSSON
No. 8249
Exp. 9/30/06
ELECTRICAL
STATE OF CALIFORNIA

PLANS APPROVAL DATE

PB POWER, Inc.
A Parsons Brinckerhoff Company
303 Second St., Suite 700N
San Francisco, CA 94107-1317

The State of California or its officers or agents shall not be responsible for the accuracy or completeness of electronic copies of this plan sheet.

Caltrans now has a web site! To get to the web site, go to http://www.dot.ca.gov

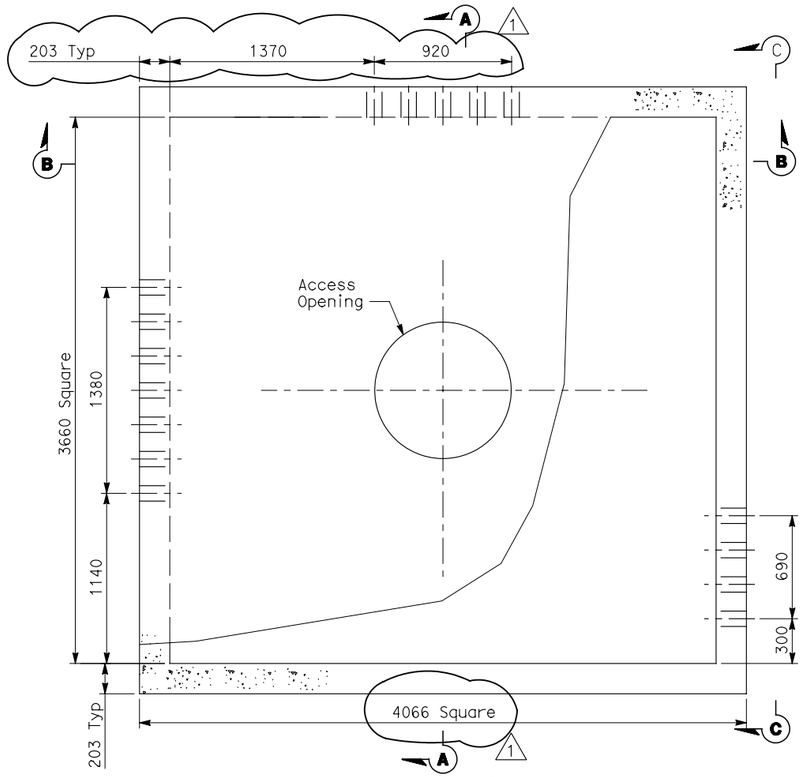

PLAN-MANHOLE-25
SCALE: 1:20 (600 V)

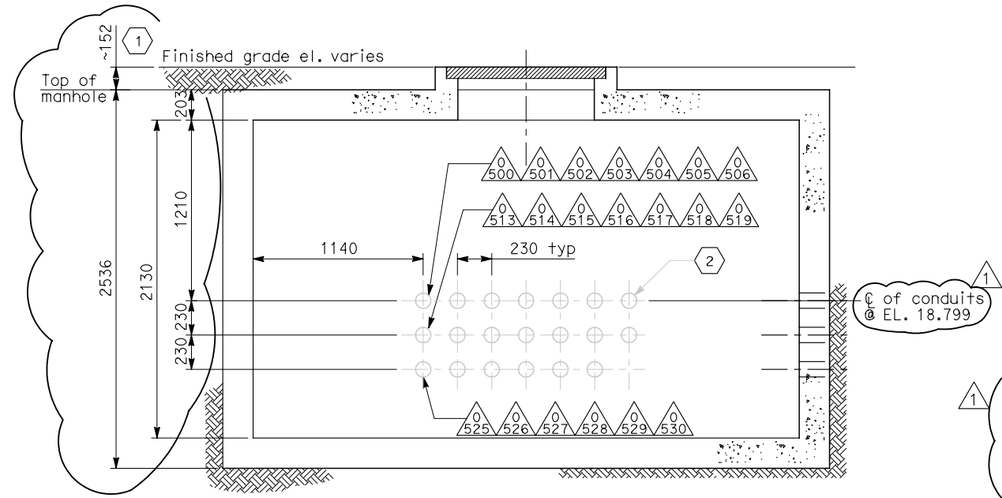

SECTION A-A
SCALE: 1:20

NOTES:

1. References:
   - For duct bank and manhole plan, see sheet E-11.
   - For typical manhole and duct bank details, see sheet E-17.
   - For duct bank sections, see sheets E-19 and E-23.
   - For circuit and conduit/cable tray schedules, see sheets starting at E-401
2. For other related work, not shown on this sheet, see Electrical Special Provisions.

SHEET NOTES:

1. Approximate distance of manhole necking or riser is from the finished grade and top of manhole. Maximum length of manhole necking or riser shall be 914 mm.
2. Not in contract. (Work included on contract 04-120P4).

MARK	DATE	DESCRIPTIONS	REV	CK	CCO NO.
1	1/10/06	Revised Manhole detail	CR	JE	11

REVISIONS

CONTRACT CHANGE ORDER NO. 11
SHEET 7 OF 13

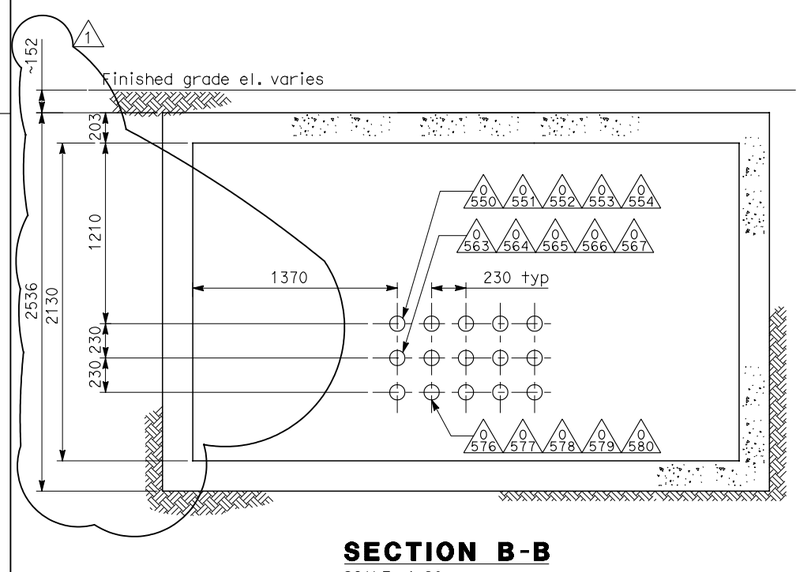

SECTION B-B
SCALE: 1:20

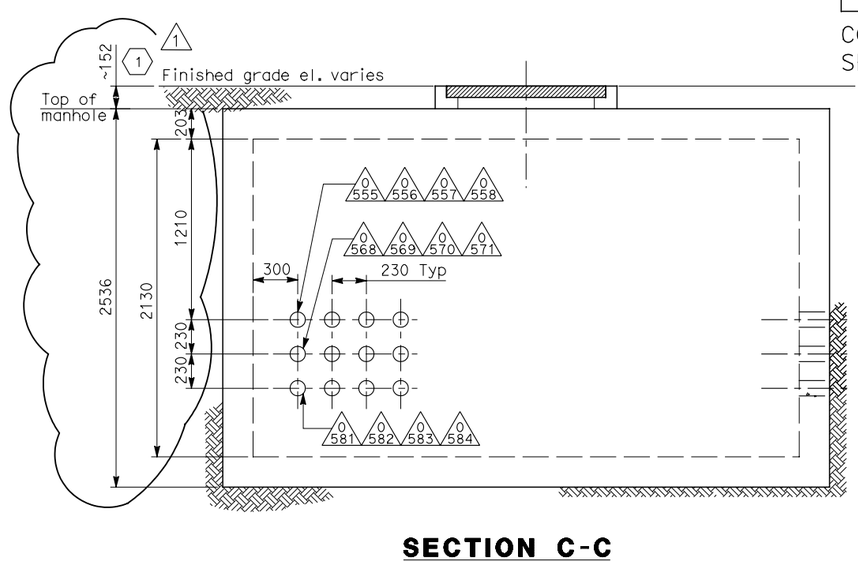

SECTION C-C
SCALE: 1:20

DETAILS
UNDERGROUND
MANHOLE PLANS AND SECTIONS
SCALE AS NOTED

E-14

ALL DIMENSIONS IN MILLIMETERS UNLESS OTHERWISE SHOWN

FOR REDUCED PLANS ORIGINAL SCALE IS IN MILLIMETERS 0 20 40 60 80

DGN FILE =>$REQUEST
USERNAME =>$USER

CU 04251 | EA 0120F1

STATE OF CALIFORNIA - DEPARTMENT OF TRANSPORTATION
Caltrans

DESIGN OVERSIGHT: BEHZAD GOLEMOHAMMADI

CALCULATED/DESIGNED BY: AB | DATE: 11/04 | REVISED BY
CHECKED BY: -- | --/-- | DATE REVISED

FILE: t:\13103\ms\pse\electrical\con1\13103es1571.dgn
DATE: 10-Jul-00 15:21

LAST REVISION 00-00-00
DATE PLOTTED => $DATE
TIME PLOTTED => $TIME

DIST	COUNTY	ROUTE	KILOMETER POST TOTAL PROJECT	SHEET No	TOTAL SHEETS
04	SF	80	13.2/13.9	98R1	1204

Jens Erlingsson 12/19/02
REGISTERED ELECTRICAL ENGINEER DATE

REGISTERED PROFESSIONAL ENGINEER
JENS ERLINGSSON
No. 8249
Exp. 9/30/06
ELECTRICAL
STATE OF CALIFORNIA

PLANS APPROVAL DATE

PB POWER, Inc.
A Parsons Brinckerhoff Company
303 Second St., Suite 700N
San Francisco, CA 94107-1317

The State of California or its officers or agents shall not be responsible for the accuracy or completeness of electronic copies of this plan sheet.

Caltrans now has a web site! To get to the web site, go to http://www.dot.ca.gov

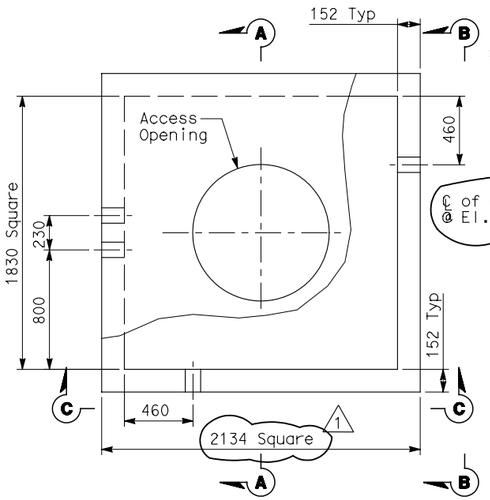

PLAN-MANHOLE-26
SCALE: 1:20 (12.47 kV)

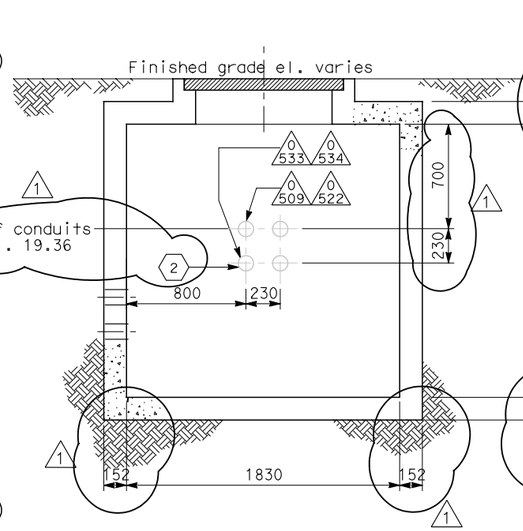

SECTION A-A
SCALE: 1:20

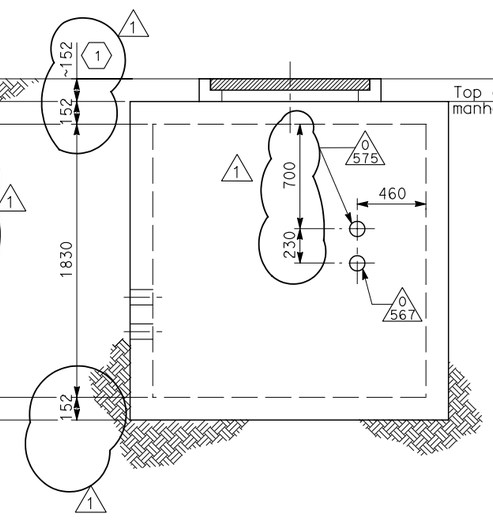

SECTION B-B
SCALE: 1:20

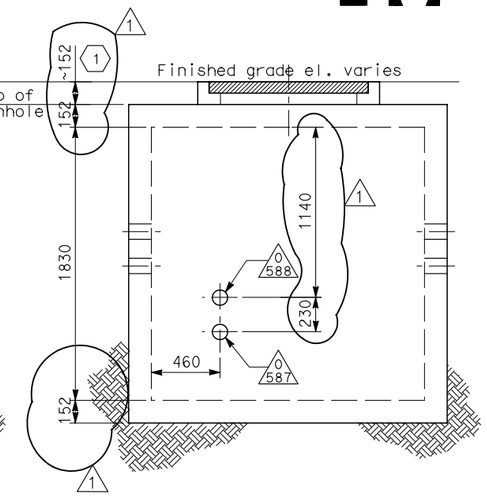

SECTION C-C
SCALE: 1:20

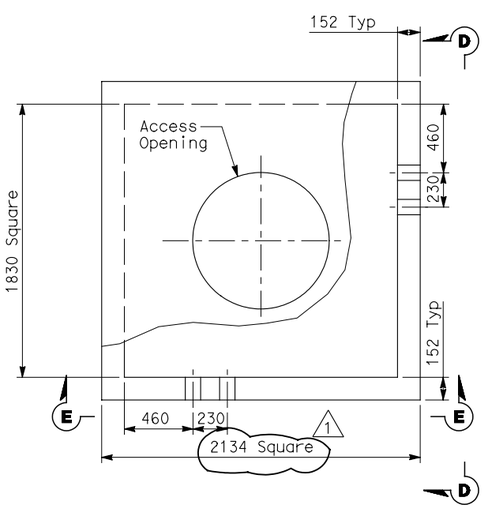

PLAN-MANHOLE-28
SCALE: 1:20 (Non-Caltrans Utilities)

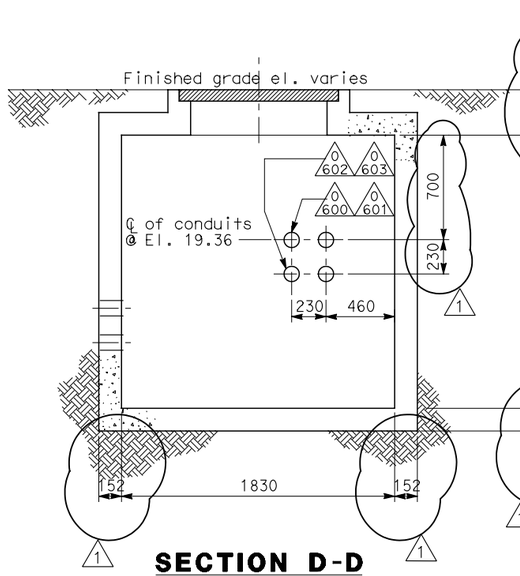

SECTION D-D
SCALE: 1:20

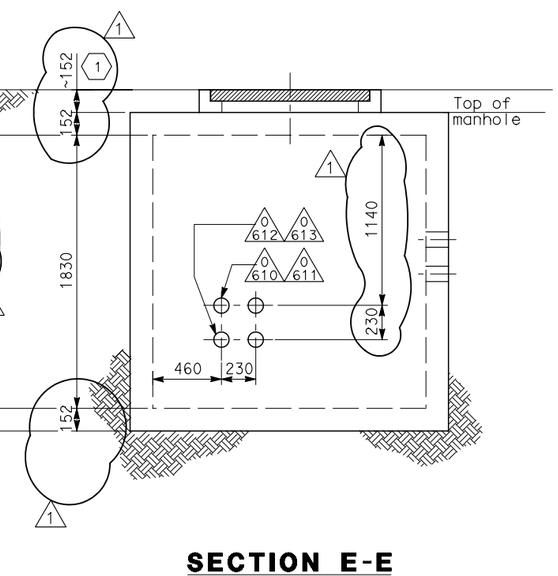

SECTION E-E
SCALE: 1:20

NOTES:

1. References:
   - For duct banks and manhole plan, see sheet E-11.
   - For typical manhole and duct bank details, see sheet E-17.
   - For duct bank sections, see sheets E-19 and E-23.
   - For circuit and conduit/cable tray schedules, see sheets starting at E-401
2. For other related work, not shown on this sheet, see Electrical Special Provisions.

SHEET NOTES:

1. Approximate distance of manhole necking or riser is from the finished grade and top of manhole. Maximum length of manhole necking or riser shall be 914 mm.
2. Not in contract. (Work included on contract 04-120P4).

MARK	DATE	DESCRIPTIONS	REV	CK	CCO NO.
1	1/10/06	Revised Manhole detail	CR	JE	11

REVISIONS

CONTRACT CHANGE ORDER NO. 11
SHEET 8 OF 13

DETAILS
UNDERGROUND
MANHOLE PLAN AND SECTIONS
SCALE AS NOTED

E-15

STATE OF CALIFORNIA - DEPARTMENT OF TRANSPORTATION
Caltrans

DESIGN OVERSIGHT: BEHZAD GOLEMOHAMMADI
CALCULATED/DESIGNED BY: AB | DATE 11/04 | REVISED BY
CHECKED BY: CYF | 11/01 | DATE REVISED

FOR REDUCED PLANS ORIGINAL SCALE IS IN MILLIMETERS 0 20 40 60 80
DGN FILE =>$REQUEST
USERNAME =>$USER
CU 04251
EA 0120F1
LAST REVISION 00-00-00
DATE PLOTTED => $DATE
TIME PLOTTED => $TIME

DIST	COUNTY	ROUTE	KILOMETER POST TOTAL PROJECT	SHEET No	TOTAL SHEETS
04	SF	80	13.2/13.9	99R1	1024

Caltrans Metric

Jens Erlingsson 12/19/02
REGISTERED ELECTRICAL ENGINEER DATE

PLANS APPROVAL DATE

REGISTERED PROFESSIONAL ENGINEER
JENS ERLINGSSON
No. 8249
Exp. 9/30/06
ELECTRICAL
STATE OF CALIFORNIA

PB POWER, Inc.
A Parsons Brinckerhoff Company
303 Second St., Suite 700N
San Francisco, CA 94107-1317

The State of California or its officers or agents shall not be responsible for the accuracy or completeness of electronic copies of this plan sheet.

Caltrans now has a web site! To get to the web site, go to http://www.dot.ca.gov

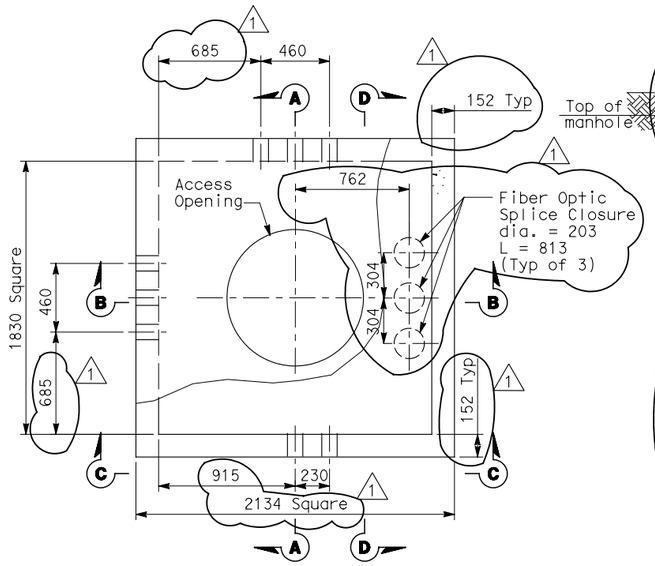

PLAN-MANHOLE-27
SCALE: 1:20 (TOS & COMMUNICATION)

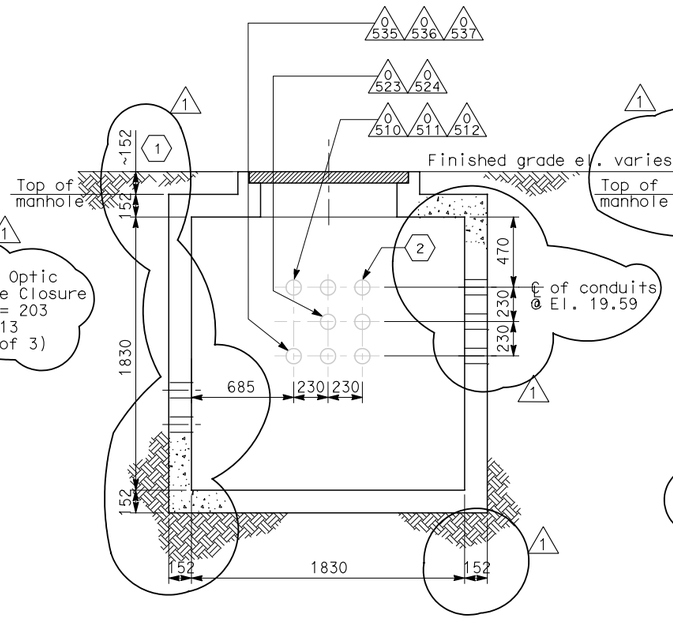

SECTION A-A
SCALE: 1:20

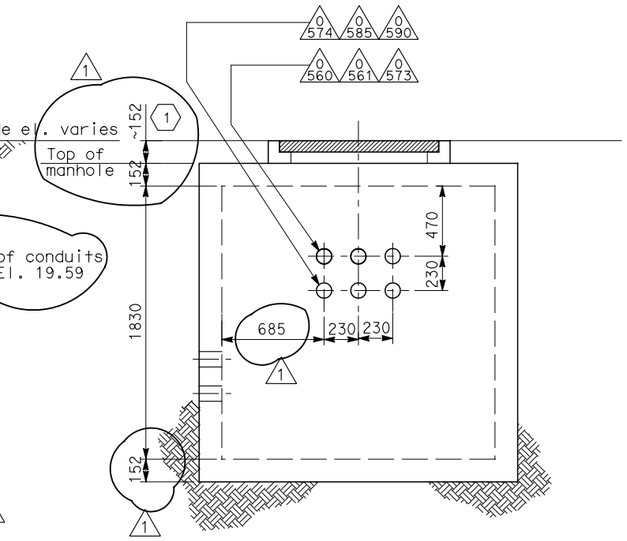

SECTION B-B
SCALE: 1:20

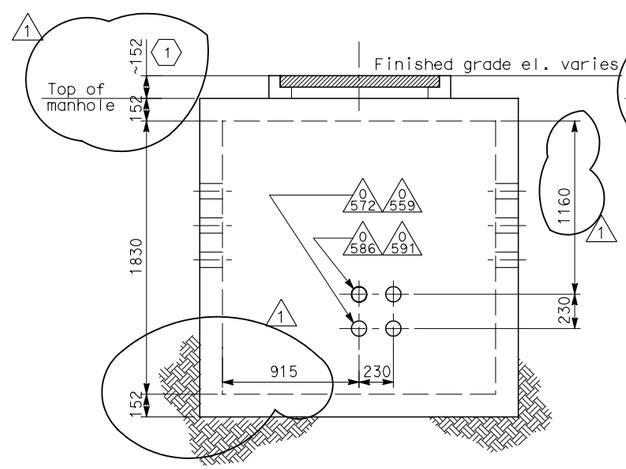

SECTION C-C
SCALE: 1:20

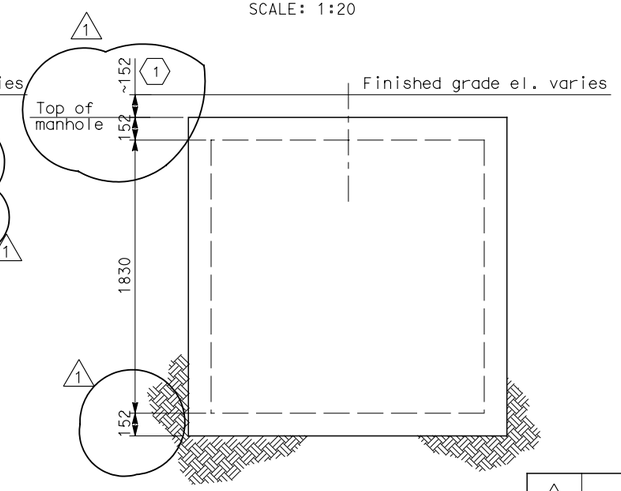

SECTION D-D
SCALE: 1:20

NOTES:

1. References:
   - For duct bank and manhole plan, see sheet E-11.
   - For typical duct bank and manhole details, see sheet E-17.
   - For duct bank sections, see sheet E-19.
   - For circuit and conduit/cable tray schedules, see sheets starting at E-401.
2. For other related work, not shown on this sheet, see Electrical Special Provisions.

SHEET NOTES:

1. Approximate distance of manhole necking or riser is from the finished grade and top of manhole. Maximum length of manhole necking or riser shall be 914 mm.

MARK	DATE	DESCRIPTIONS	REV	CK	CCO NO.
1	1/10/06	Revised Manhole detail	CR	JE	11

REVISIONS

CONTRACT CHANGE ORDER NO. 11
SHEET 9 OF 13

DETAILS
UNDERGROUND
MANHOLE PLAN AND SECTIONS
SCALE AS NOTED

E-16

STATE OF CALIFORNIA - DEPARTMENT OF TRANSPORTATION
Caltrans

DESIGN OVERSIGHT: BEHZAD GOLEMOHAMMADI
CALCULATED/DESIGNED BY: AB
CHECKED BY: --
DATE 11/04
REVISED BY: --/--
DATE REVISED

DATE PLOTTED => $DATE
TIME PLOTTED => $TIME
LAST REVISION 00-00-00

FOR REDUCED PLANS ORIGINAL SCALE IS IN MILLIMETERS 0 20 40 60 80
DGN FILE => $REQUEST
USERNAME => $USER
CU 04251
EA 0120F1

DIST	COUNTY	ROUTE	KILOMETER POST TOTAL PROJECT	SHEET No	TOTAL SHEETS
04	SF	80	13.2/13.9	132R1	1204

Caltrans Metric

12/19/02
REGISTERED ELECTRICAL ENGINEER DATE

REGISTERED PROFESSIONAL ENGINEER
JENS ERLINGSSON
No. 8249
Exp. 9/30/06
ELECTRICAL
STATE OF CALIFORNIA

PLANS APPROVAL DATE

PB POWER, Inc.
A Parsons Brinckerhoff Company
303 Second St., Suite 700N
San Francisco, CA 94107-1317

The State of California or its officers or agents shall not be responsible for the accuracy or completeness of electronic copies of this plan sheet.

Caltrans now has a web site! To get to the web site, go to http://www.dot.ca.gov

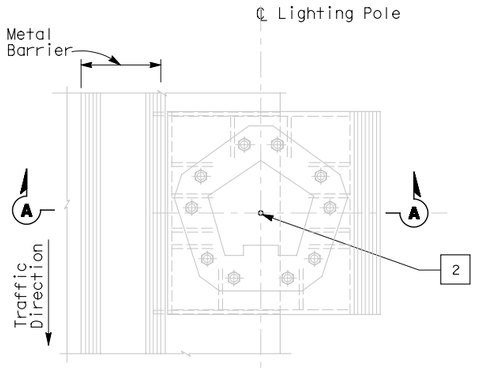

PLAN
CONDUIT STUB-UP PLAN FOR ROADWAY LIGHTING ON A METAL BASE
SCALE 1:20

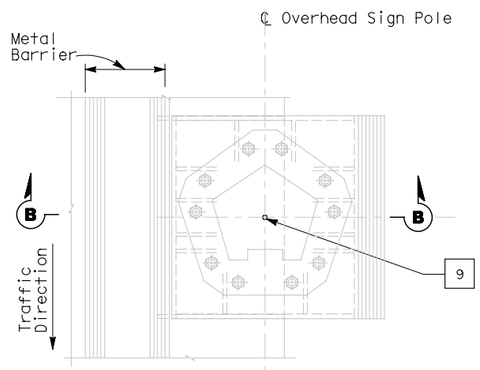

PLAN
CONDUIT STUB-UP PLAN FOR OVERHEAD SIGN ON A METAL BASE
SCALE 1:20

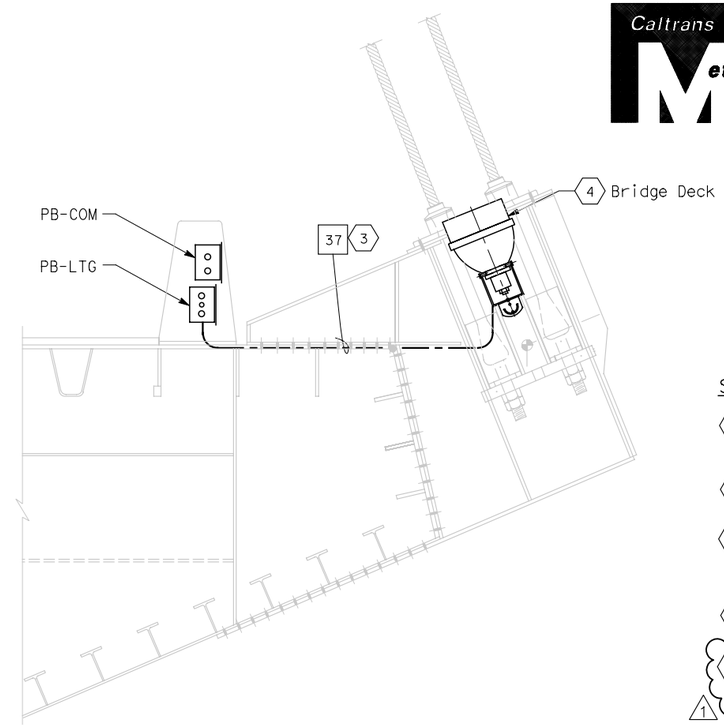

TYPICAL PYLON FLOODLIGHT CONDUIT LAYOUT
SCALE 1:20

SHEET NOTES:

1. Bond grounding bushing to ground lug of lighting pole with #6 bare copper wire.
2. Conduits for future light pipe shall continue from this pull box.
3. Conduit shall be clear of all piping and pipe sleeves. Route conduit on top of deck plate, outside of girder box.
4. For pylon floodlightting layout, see sheets E-47 & E-48.
5. See Utility Detail No. 1 (Sheet No. 965 of 1204) for conduit penetration through girder plate and lighting pole metal base. The Contractor shall install seglant between the sleeve and conduit for future light pipe, plug and cap sleeve to prevent water or moisture from passing inside the sleeve. (1)

MARK	DATE	DESCRIPTIONS	REV	CK	CCO NO.
1	10/16/06	Revised sheet notes.	LR	MG	11

REVISIONS

CONTRACT CHANGE ORDER NO. 11
SHEET 10 OF 13

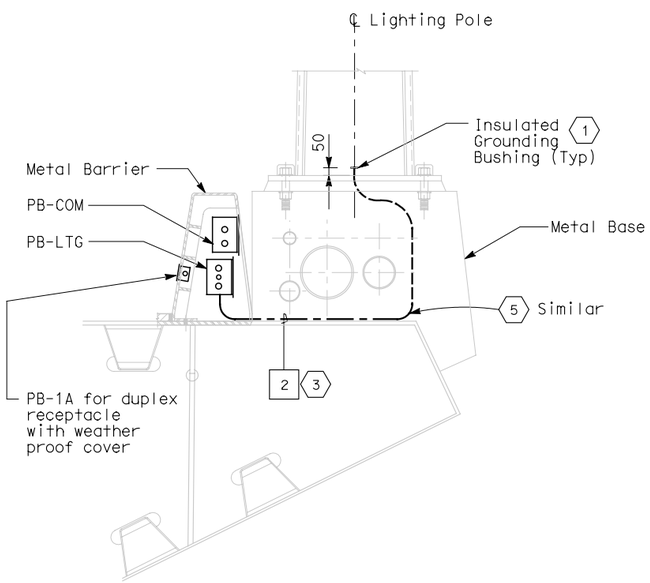

SECTION A-A
SCALE 1:20

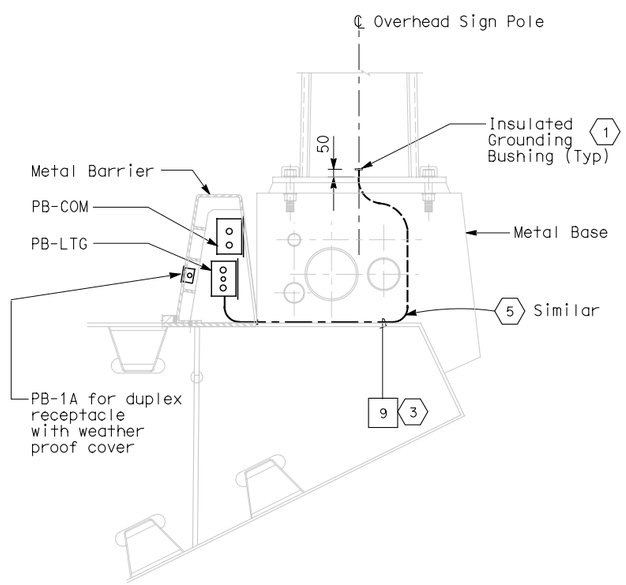

SECTION B-B
SCALE 1:20

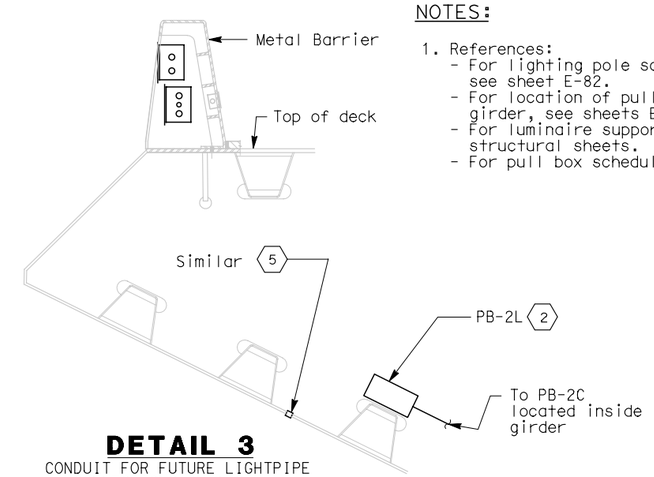

DETAIL 3
CONDUIT FOR FUTURE LIGHTPIPE CONNECTIONS ON A STEEL STRUCTURE
SCALE: 1:20

NOTES:

1. References:
   - For lighting pole schedule, see sheet E-82.
   - For location of pull boxes inside girder, see sheets E-96 thru E-101.
   - For luminaire support details, see structural sheets.
   - For pull box schedule, see sheet E-83.

DETAILS
SAS SUPERSTRUCTURE ROADWAY WESTBOUND CONDUIT LOCATIONS
SCALE AS NOTED

E-67

CALCULATED/ DESIGNED BY	KG	DATE 10/01	REVISED BY	DATE REVISED
CHECKED BY	AB	11/01		

DESIGN OVERSIGHT
BEHZAD GOLEMOHAMMADI

STATE OF CALIFORNIA - DEPARTMENT OF TRANSPORTATION
Caltrans

LAST REVISION 00-00-00

FOR REDUCED PLANS ORIGINAL SCALE IS IN MILLIMETERS 0 20 40 60 80

DGN FILE =>$REQUEST
USERNAME =>$USER

CU 04251

EA 0120F1

DIST	COUNTY	ROUTE	KILOMETER POST TOTAL PROJECT	SHEET No	TOTAL SHEETS
04	SF	80	13.2/13.9	133R1	1204

REGISTERED ELECTRICAL ENGINEER 12/19/02 DATE

12-6-04
PLANS APPROVAL DATE

REGISTERED PROFESSIONAL ENGINEER JENS ERLINGSSON No. 8249 Exp. 9/30/06 ELECTRICAL STATE OF CALIFORNIA

PB POWER, Inc.
A Parsons Brinckerhoff Company
303 Second St., Suite 700N
San Francisco, CA 94107-1317

The State of California or its officers or agents shall not be responsible for the accuracy or completeness of electronic copies of this plan sheet.

Caltrans now has a web site! To get to the web site, go to http://www.dot.ca.gov

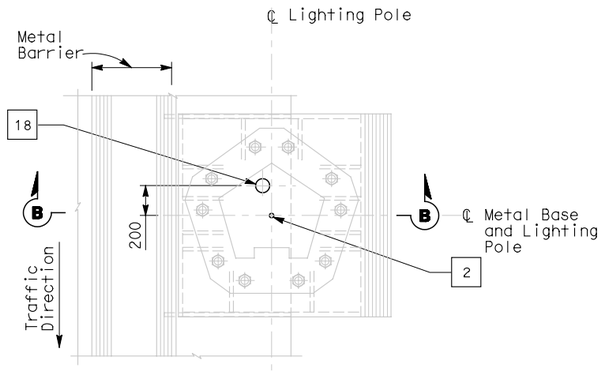

PLAN
CONDUIT STUB-UP PLAN FOR ROADWAY LIGHTING AND MVDS ON METAL BASE
SCALE 1:20

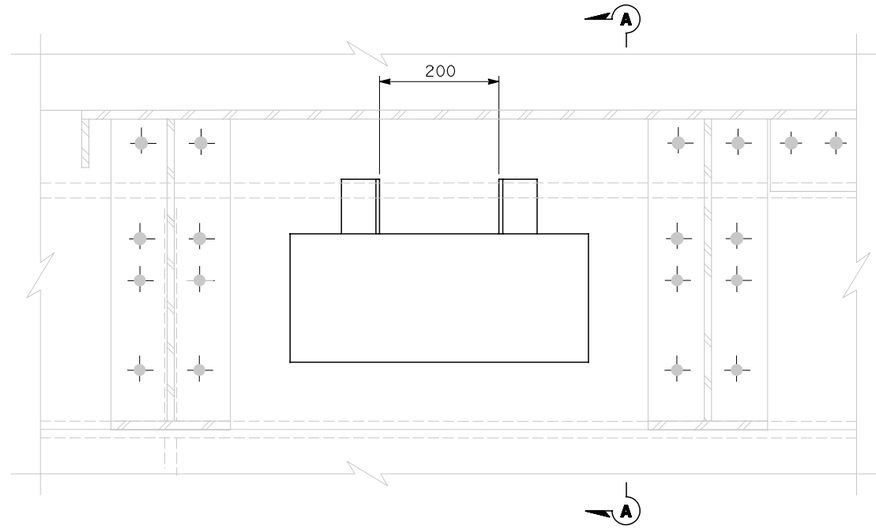

PLAN
PULL BOX IN STEEL BARRIER
SCALE 1:5

SHEET NOTES:

(1) Bond grounding bushing to ground lug of lighting pole or overhead sign post with #6 bare copper wire.

(2) Conduit shall clear all piping and pipe sleeves. Route conduit on top of deck plate, outside of girder box.

(3) See Utility Detail No. 1 (Sheet No. 965 of 1204) for conduit penetration through girder plate and lighting pole metal base. The Contractor shall install sealant between the sleeve and conduit to prevent water or moisture from passing inside the sleeve.

△1

NOTES:

1. References:
   - For installation and typical details of TOS equipment, see sheets E-344 thru E-357.
   - For pull box schedule, see sheet E-83.
   - For TOS field element locations, see sheet E-341.

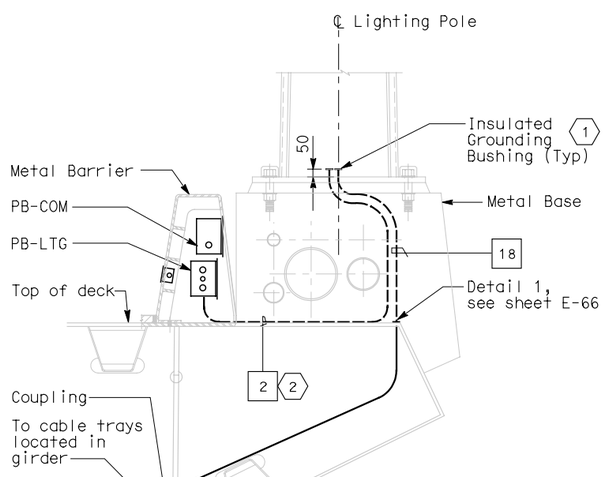

SECTION B-B
SCALE 1:20

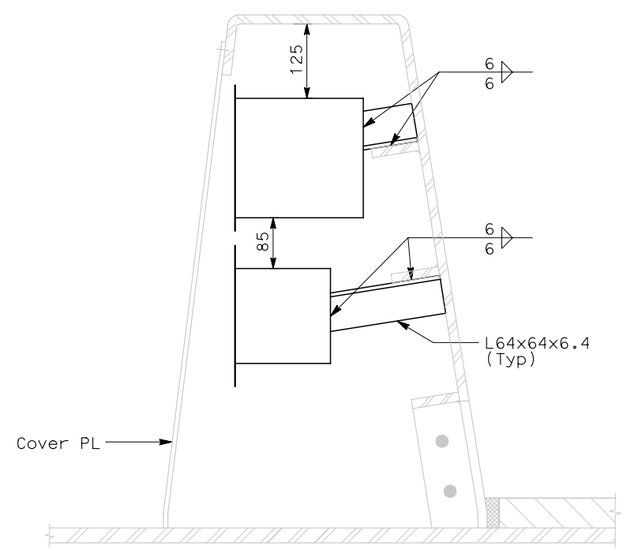

SECTION A-A
SCALE 1:5

MARK	DATE	DESCRIPTIONS	REV	CK	CCO NO.
△1	10/16/06	Revised sheet notes.	LR	MG	11

REVISIONS

CONTRACT CHANGE ORDER NO. 11
SHEET 11 OF 13

DETAILS
SAS SUPERSTRUCTURE ROADWAY WESTBOUND CONDUIT LOCATIONS
SCALE AS NOTED

E-68

DATE	REVISED BY	DATE	REVISED
10/01	KG	11/01	AB

CALCULATED/DESIGNED BY — CHECKED BY

DESIGN OVERSIGHT — BEHZAD GOLEMOHAMMADI

STATE OF CALIFORNIA - DEPARTMENT OF TRANSPORTATION

Caltrans

LAST REVISION 00-00-00 — DATE PLOTTED => $DATE — TIME PLOTTED => $TIME

FOR REDUCED PLANS ORIGINAL SCALE IS IN MILLIMETERS 0 20 40 60 80

DGN FILE =>$REQUEST
USERNAME =>$USER

CU 04251 — EA 0120F1

DIST	COUNTY	ROUTE	KILOMETER POST TOTAL PROJECT	SHEET No	TOTAL SHEETS
04	SF	80	13.2/13.9	208R1	1204

Caltrans Metric

Jens Erlingsson 12/19/02
REGISTERED ELECTRICAL ENGINEER DATE

12-6-04
PLANS APPROVAL DATE

REGISTERED PROFESSIONAL ENGINEER
JENS ERLINGSSON
No. 8249
Exp. 9/30/06
ELECTRICAL
STATE OF CALIFORNIA

PB POWER, Inc.
A Parsons Brinckerhoff Company
303 Second St., Suite 700N
San Francisco, CA 94107-1317

The State of California or its officers or agents shall not be responsible for the accuracy or completeness of electronic copies of this plan sheet.

Caltrans now has a web site! To get to the web site, go to http://www.dot.ca.gov

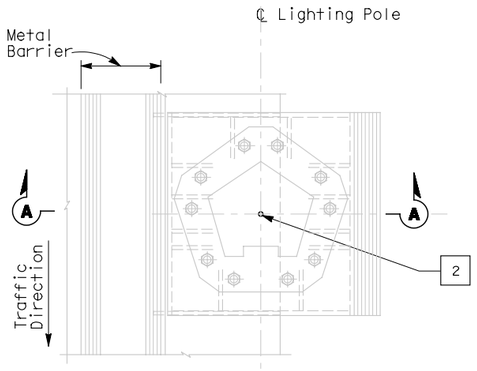

PLAN
TYPICAL CONDUIT STUB PLAN FOR ROADWAY LIGHTING ON A METAL BASE
SCALE 1:20

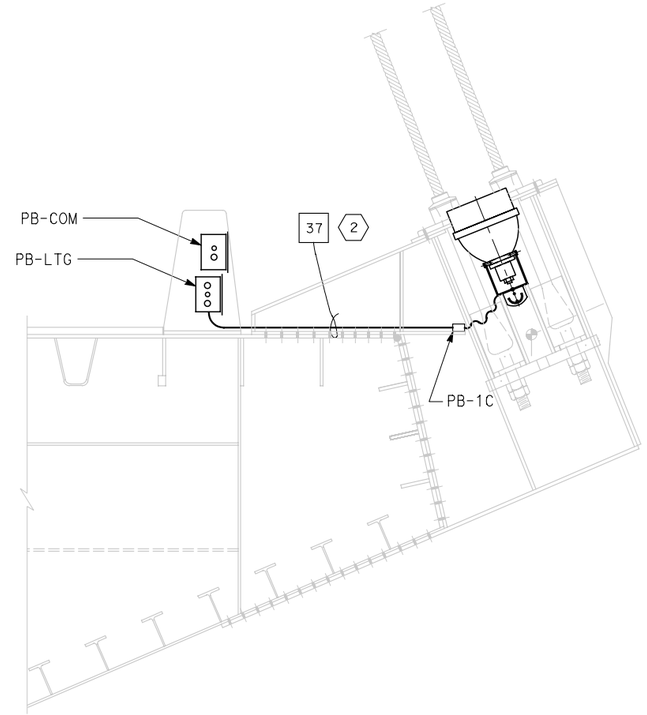

TYPICAL UPLIGHT CONDUIT LAYOUT
SCALE 1:20

SHEET NOTES:

1. Bond grounding bushing to ground lug of lighting pole with #6 bare copper wire.
2. Conduit shall be clear of all piping and pipe sleeves. Route conduit on top of deck plate, outside of girder box.
3. See Utility Detail No. 1 (Sheet No. 965 of 1204) for conduit penetration through girder plate and lighting pole metal base. The Contractor shall install sealant between the sleeve and conduit for future light pipe, plug and cap sleeve to prevent water or moisture from passing inside the sleeve. (1)

NOTES:

1. References:
   - For lighting pole schedule, see sheet E-168.
   - For location of pull boxes inside girder, see sheets E-181 thru E-186.
   - For luminaire support details, see structural sheets.

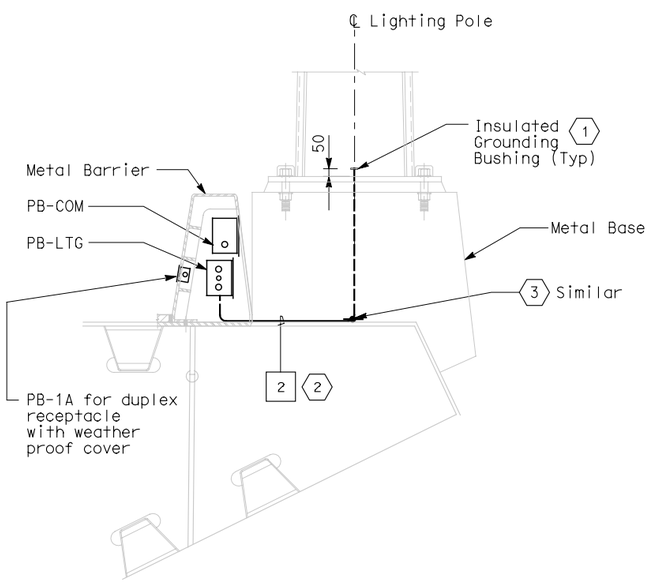

SECTION A-A
SCALE 1:20

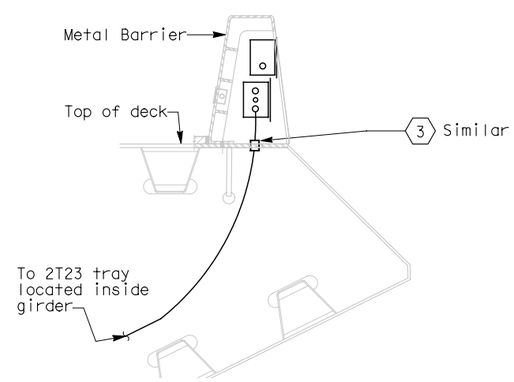

DETAIL 3
CONDUIT FOR FUTURE LIGHTPIPE CONNECTIONS ON A STEEL STRUCTURE
SCALE 1:20

MARK	DATE	DESCRIPTIONS	REV	CK	CCO NO.
1	10/16/06	Revised sheet notes.	LR	MG	11

REVISIONS

CONTRACT CHANGE ORDER NO. 11
SHEET 12 OF 13

DETAILS
SAS SUPERSTRUCTURE ROADWAY EASTBOUND CONDUIT LOCATIONS
SCALE AS NOTED

E-161

ALL DIMENSIONS ARE IN MILLIMETERS UNLESS OTHERWISE SHOWN.

STATE OF CALIFORNIA - DEPARTMENT OF TRANSPORTATION
Caltrans

DESIGN OVERSIGHT: BEHZAD GOLEMOHAMMADI
CALCULATED/DESIGNED BY: KG DATE 10/01
CHECKED BY: AB 11/01
REVISED BY
DATE REVISED

FOR REDUCED PLANS ORIGINAL SCALE IS IN MILLIMETERS 0 20 40 60 80
DGN FILE =>$REQUEST
USERNAME =>$USER
CU 04251
EA 04201F2 0F4
LAST REVISION 00-00-00

DIST	COUNTY	ROUTE	KILOMETER POST TOTAL PROJECT	SHEET No	TOTAL SHEETS
04	SF	80	13.2/13.9	233 R1	1204

12/19/02
REGISTERED ELECTRICAL ENGINEER DATE

PLANS APPROVAL DATE

REGISTERED PROFESSIONAL ENGINEER
JENS ERLINGSSON
No. 8249
Exp. 9/30/06
ELECTRICAL
STATE OF CALIFORNIA

PB POWER, Inc.
A Parsons Brinckerhoff Company
303 Second St., Suite 700N
San Francisco, CA 94107-1317

The State of California or its officers or agents shall not be responsible for the accuracy or completeness of electronic copies of this plan sheet.

Caltrans now has a web site! To get to the web site, go to http://www.dot.ca.gov

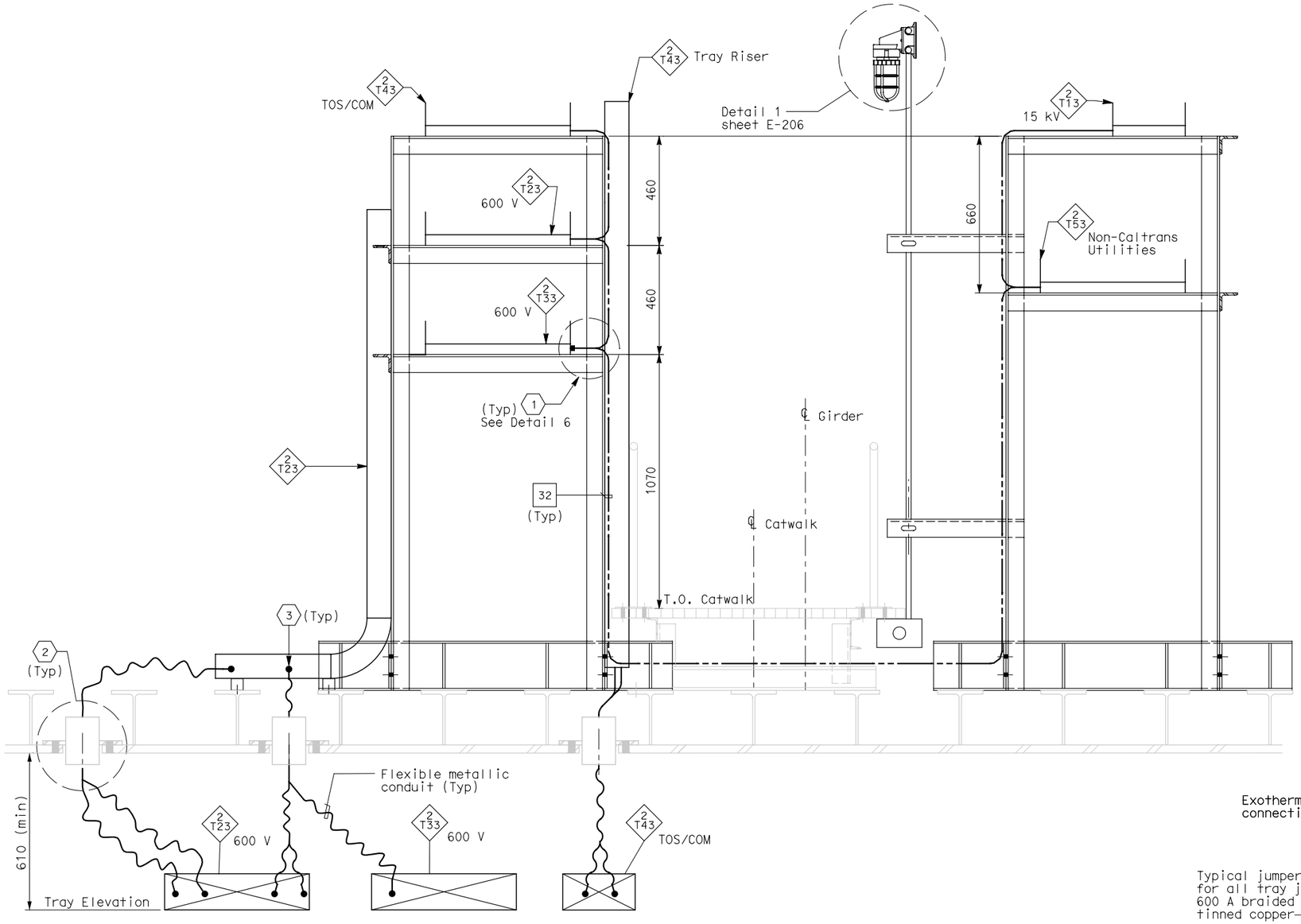

SECTION D-D - TYPICAL CABLE TRAY SUPPORT

SCALE: 1:10

SHEET NOTES:

1. Provide connections to 500 kcmil system ground for all cable trays, every 200 meters.
2. For location of conduit penetrations thru girder plate, see Utility Detail No. 1 and Utility Layout sheets respectively. To prevent moisture from passing inside the sleeve, Contractor shall install sealant after conduit have been installed. Spares shall be plugged and capped.
3. Contractor shall provide hooked conduit support grips for each conduit or groups of conduits passing through the conduit penetrations. Contractor shall provide support for grips as needed.

NOTES:

1. See structural drawings for Catwalk Support Details.
2. For SAS Superstructure Girder access detail #2, see structural dwgs.
3. Ground cable shall be installed along full length of the 15 kV cable tray only.
4. For typical cable tray support details, see AS-sheets.

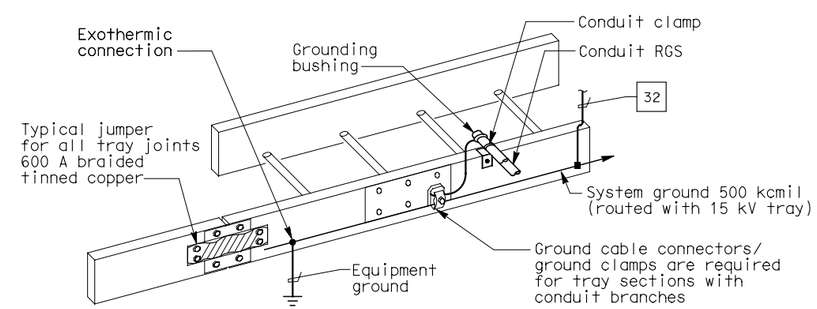

GROUNDING OF METALLIC RACEWAYS

DETAIL 6

MARK	DATE	DESCRIPTIONS	REV	CK	CCO NO.
1	1/10/06	Revised note. Bidder Inquiry #330.	CR	JE	11

REVISIONS

CONTRACT CHANGE ORDER NO. 11
SHEET 13 OF 13

DETAILS
SAS SUPERSTRUCTURE GIRDER EASTBOUND
TYPICAL CABLE TRAY AND GROUNDING INSTALLATION 2

SCALE AS NOTED

E-208

ALL DIMENSIONS ARE IN MILLIMETERS UNLESS OTHERWISE SHOWN.

FOR REDUCED PLANS ORIGINAL SCALE IS IN MILLIMETERS 0 20 40 60 80

DGN FILE =>$REQUEST
USERNAME =>$USER

CU 04251 | EA 0120F1

STATE OF CALIFORNIA - DEPARTMENT OF TRANSPORTATION
Caltrans

DESIGN OVERSIGHT: BEHZAD GOLEMOHAMMADI

CALCULATED/DESIGNED BY: EDC | DATE: 08/02 | REVISED BY
CHECKED BY: CYF | 3/04 | DATE REVISED

LAST REVISION 00-00-00 | DATE PLOTTED => $DATE | TIME PLOTTED => $TIME

DIST	COUNTY	ROUTE	KILOMETER POST TOTAL PROJECT	SHEET No	TOTAL SHEETS
04	SF	80	13.2/13.9	5R1	1204

Gene V. Lusherovich 12/19/02
REGISTERED CIVIL ENGINEER DATE

PLANS APPROVAL DATE

REGISTERED PROFESSIONAL ENGINEER Gene V. Lusherovich No. C54338 Exp. 12/31/03 CIVIL STATE OF CALIFORNIA

PARSONS BRINCKERHOFF QUADE & DOUGLAS, INC.
303 Second St., Suite 700N
San Francisco, CA 94107-1317

The State of California or its officers or agents shall not be responsible for the accuracy or completeness of electronic copies of this plan sheet.

Caltrans now has a web site! To get to the web site, go to http://www.dot.ca.gov

Caltrans Metric

REGISTERED PROFESSIONAL ENGINEER Mark Grodzki No. C65594 Exp. 9/31/07 CIVIL STATE OF CALIFORNIA

MARK	DATE	DESCRIPTIONS	REV	CK	CCO NO.
1	10/16/06	Removed Matchline Elevations (Revised Elevations)	LR	MG	11

REVISIONS

CONTRACT CHANGE ORDER NO. 11
SHEET 4 OF 13

NOTE:

1. Elevation is based on 1929 National Geodetic Vertical Datum (NGVD).

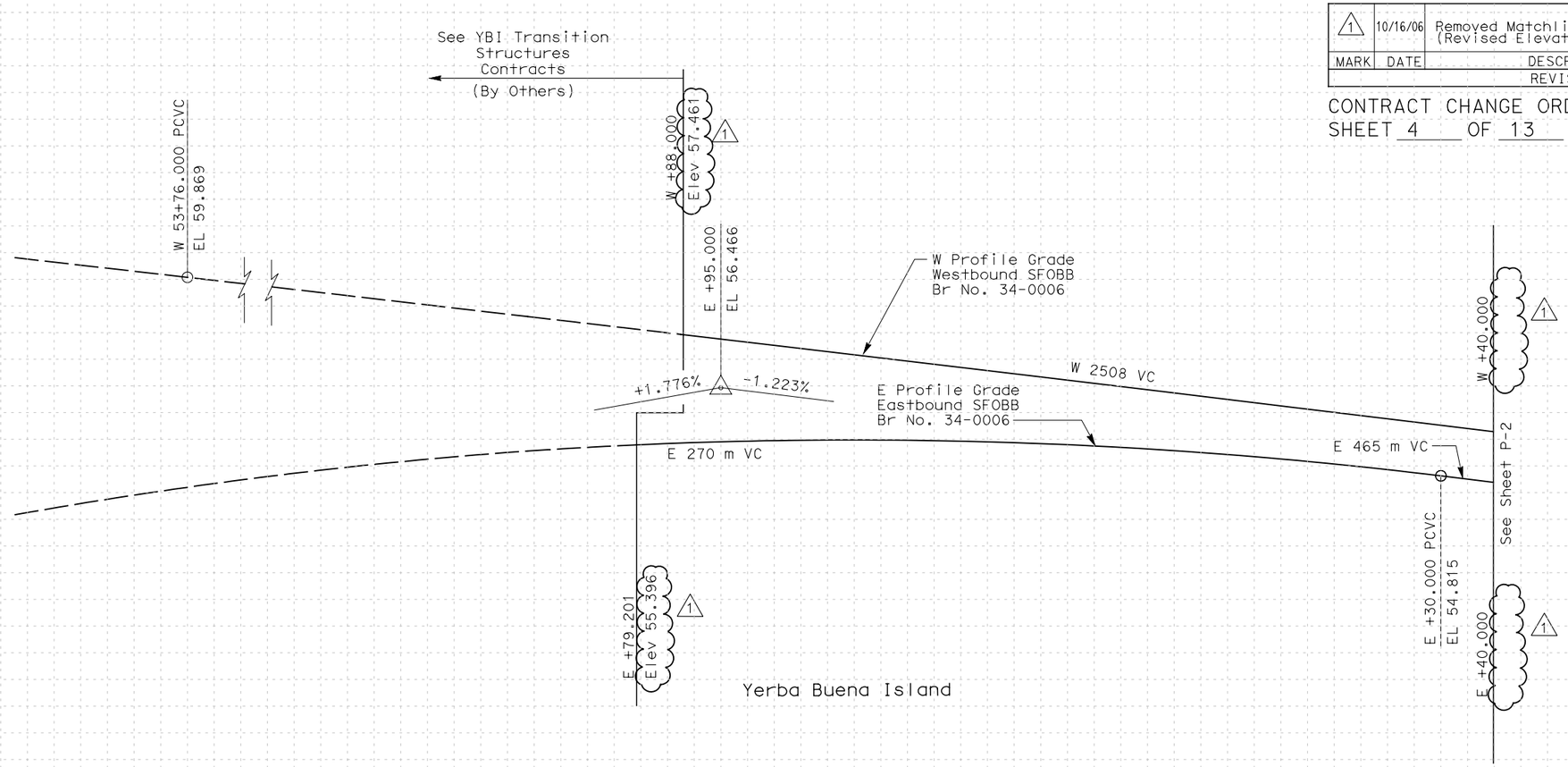

W LINE AND E LINE

ALL DIMENSIONS ARE IN METERS UNLESS OTHERWISE SHOWN

PROFILE

SCALE: 1:500 HORIZ
1:50 VERT

P-1

Station	+80	56+00	+20	+40	+60	+80	57+00	+20	+40	+60
Cu.										
M. Exc.										
M. Emb.										

STATE OF CALIFORNIA - DEPARTMENT OF TRANSPORTATION
Caltrans

DESIGN OVERSIGHT
Bob Zandipour

CALCULATED/DESIGNED BY GVL
CHECKED BY KR
DATE 11/02
REVISED BY
DATE REVISED

LAST REVISION 00-00-00
DATE PLOTTED => $DATE
TIME PLOTTED => $TIME

FOR REDUCED PLANS ORIGINAL SCALE IS IN MILLIMETERS 0 20 40 60 80

USERNAME =>$USER
DGN FILE =>$REQUEST

CU 04251

EA 0120F1

DIST	COUNTY	ROUTE	KILOMETER POST TOTAL PROJECT	SHEET No	TOTAL SHEETS
04	SF	80	13.2/13.9	6R1	1204

Gene V. Lusherovich 12/19/02
REGISTERED CIVIL ENGINEER DATE

PLANS APPROVAL DATE

REGISTERED PROFESSIONAL ENGINEER Gene V. Lusherovich No. C54338 Exp. 12/31/03 CIVIL STATE OF CALIFORNIA

PARSONS BRINCKERHOFF QUADE & DOUGLAS, INC.
303 Second St., Suite 700N
San Francisco, CA 94107-1317

The State of California or its officers or agents shall not be responsible for the accuracy or completeness of electronic copies of this plan sheet.

Caltrans now has a web site! To get to the web site, go to http://www.dot.ca.gov

Caltrans Metric

REGISTERED PROFESSIONAL ENGINEER Mark Grodzki No. C65594 Exp. 9/31/07 CIVIL STATE OF CALIFORNIA

MARK	DATE	DESCRIPTIONS	REV	CK	CCO NO.
1	10/16/06	Removed Matchline Elevations	LR	MG	11

REVISIONS

CONTRACT CHANGE ORDER NO. 11
SHEET 5 OF 13

NOTE:

1. Elevation is based on 1929 National Geodetic Vertical Datum (NGVD).

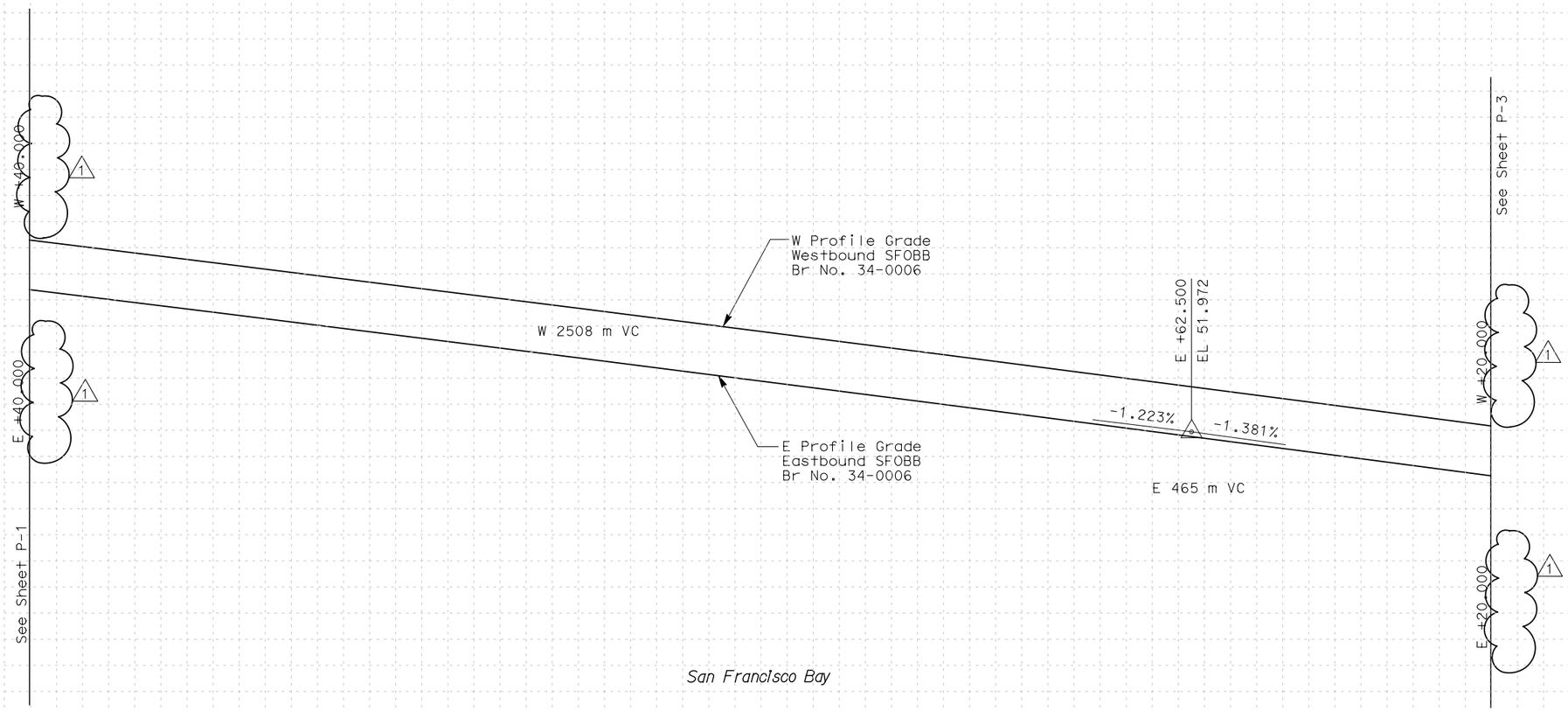

W LINE AND E LINE

ALL DIMENSIONS ARE IN METERS UNLESS OTHERWISE SHOWN

PROFILE

SCALE: 1:500 HORIZ
1:50 VERT

P-2

Station	+40	+60	+80	58+00	+20	+40	+60	+80	59+00	+20	+40	+60	+80	60+00	+20	+40
Cu.																
M. Exc.									0							
M. Emb.									0							

DESIGN OVERSIGHT: Bob Zandipour
CALCULATED/DESIGNED BY: GVL 11/02
CHECKED BY: KR 11/02
REVISED BY / DATE REVISED

STATE OF CALIFORNIA - DEPARTMENT OF TRANSPORTATION
Caltrans

LAST REVISION 00-00-00
DATE PLOTTED => $DATE
TIME PLOTTED => $TIME

FOR REDUCED PLANS ORIGINAL SCALE IS IN MILLIMETERS 0 20 40 60 80

USERNAME =>$USER
DGN FILE =>$REQUEST

CU 04251 EA 0120F1

DIST	COUNTY	ROUTE	KILOMETER POST TOTAL PROJECT	SHEET No	TOTAL SHEETS
04	SF	80	13.2/13.9	7R1	1204

Gene V. Lusherovich 12/19/02
REGISTERED CIVIL ENGINEER DATE

PLANS APPROVAL DATE

REGISTERED PROFESSIONAL ENGINEER Gene V. Lusherovich No. C54338 Exp. 12/31/03 CIVIL STATE OF CALIFORNIA

PARSONS BRINCKERHOFF QUADE & DOUGLAS, INC.
303 Second St., Suite 700N
San Francisco, CA 94107-1317

The State of California or its officers or agents shall not be responsible for the accuracy or completeness of electronic copies of this plan sheet.

Caltrans now has a web site! To get to the web site, go to http://www.dot.ca.gov

Caltrans Metric

NOTE:

1. Elevation is based on 1929 National Geodetic Vertical Datum (NGVD).

REGISTERED PROFESSIONAL ENGINEER Mark Grodzki No. C65594 Exp. 9/31/07 CIVIL STATE OF CALIFORNIA

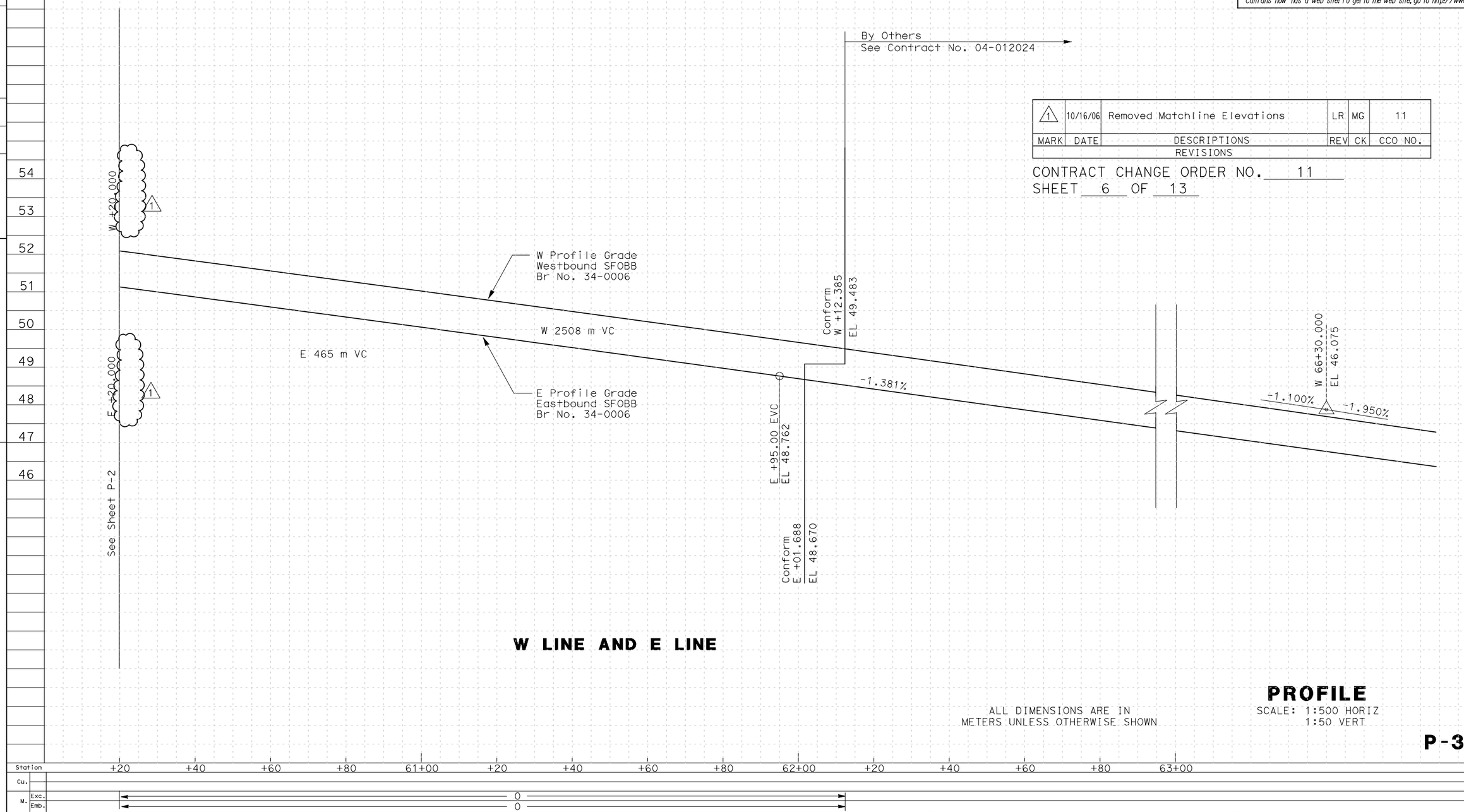

MARK	DATE	DESCRIPTIONS	REV	CK	CCO NO.
1	10/16/06	Removed Matchline Elevations	LR	MG	11

REVISIONS

CONTRACT CHANGE ORDER NO. 11
SHEET 6 OF 13

W LINE AND E LINE

ALL DIMENSIONS ARE IN METERS UNLESS OTHERWISE SHOWN

PROFILE
SCALE: 1:500 HORIZ
1:50 VERT

P-3

STATE OF CALIFORNIA - DEPARTMENT OF TRANSPORTATION
Caltrans

DESIGN OVERSIGHT: Bob Zandipour

CALCULATED/DESIGNED BY: GVL DATE 11/02
CHECKED BY: KR 11/02
REVISED BY
DATE REVISED

LAST REVISION 00-00-00
DATE PLOTTED => $DATE
TIME PLOTTED => $TIME

FOR REDUCED PLANS ORIGINAL SCALE IS IN MILLIMETERS 0 20 40 60 80

USERNAME =>$USER
DGN FILE =>$REQUEST

CU 04251

EA 0120F1

DIST	COUNTY	ROUTE	KILOMETER POST TOTAL PROJECT	SHEET No	TOTAL SHEETS
04	SF	80	13.2/13.9	97R1	1204

Caltrans Metric

Jens Erlingsson 12/19/02
REGISTERED ELECTRICAL ENGINEER DATE

REGISTERED PROFESSIONAL ENGINEER
JENS ERLINGSSON
No. 8249
Exp. 9/30/06
ELECTRICAL
STATE OF CALIFORNIA

PLANS APPROVAL DATE

PB POWER, Inc.
A Parsons Brinckerhoff Company
303 Second St., Suite 700N
San Francisco, CA 94107-1317

The State of California or its officers or agents shall not be responsible for the accuracy or completeness of electronic copies of this plan sheet.

Caltrans now has a web site! To get to the web site, go to http://www.dot.ca.gov

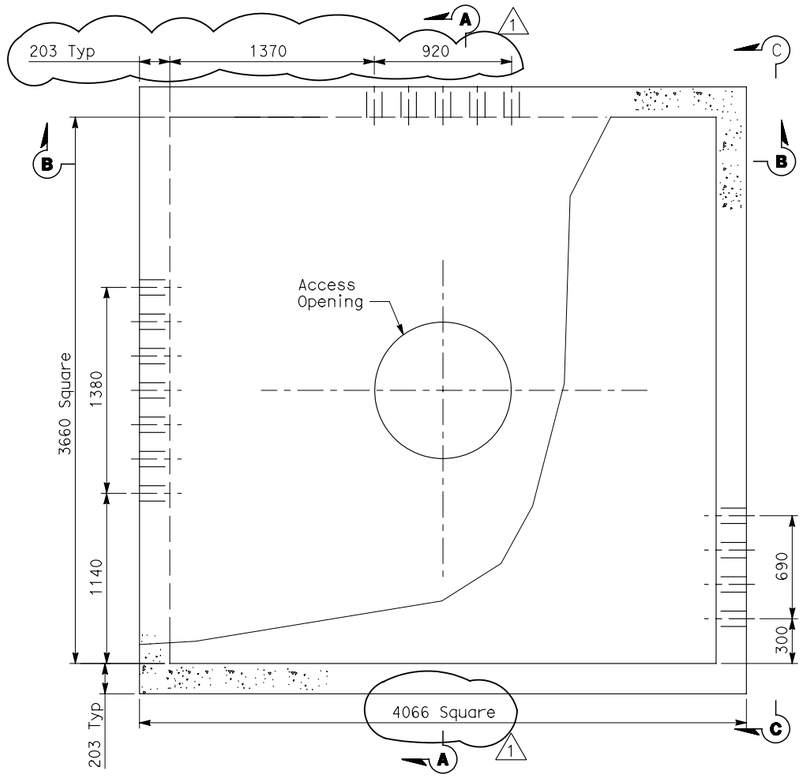

PLAN-MANHOLE-25
SCALE: 1:20 (600 V)

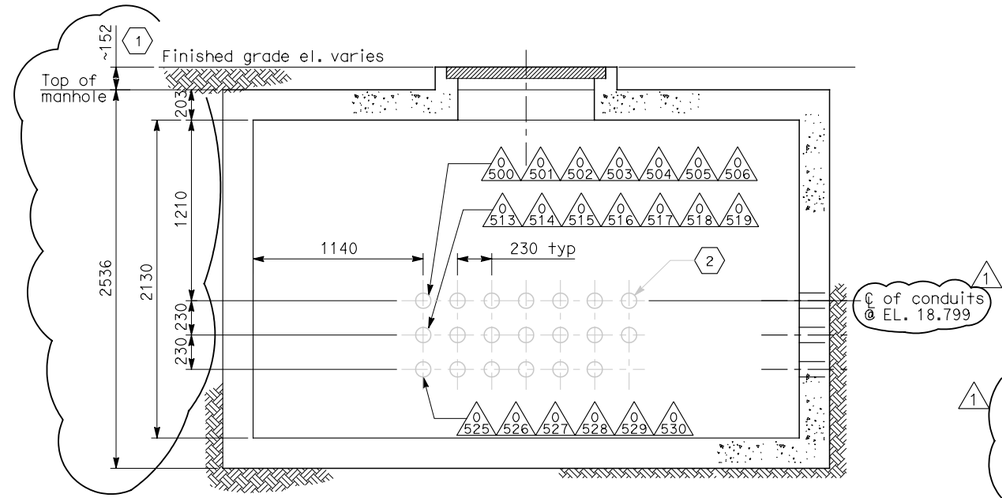

SECTION A-A
SCALE: 1:20

NOTES:

1. References:
   - For duct bank and manhole plan, see sheet E-11.
   - For typical manhole and duct bank details, see sheet E-17.
   - For duct bank sections, see sheets E-19 and E-23.
   - For circuit and conduit/cable tray schedules, see sheets starting at E-401
2. For other related work, not shown on this sheet, see Electrical Special Provisions.

SHEET NOTES:

1. Approximate distance of manhole necking or riser is from the finished grade and top of manhole. Maximum length of manhole necking or riser shall be 914 mm.
2. Not in contract. (Work included on contract 04-120P4).

MARK	DATE	DESCRIPTIONS	REV	CK	CCO NO.
1	1/10/06	Revised Manhole detail	CR	JE	11

REVISIONS

CONTRACT CHANGE ORDER NO. 11
SHEET 7 OF 13

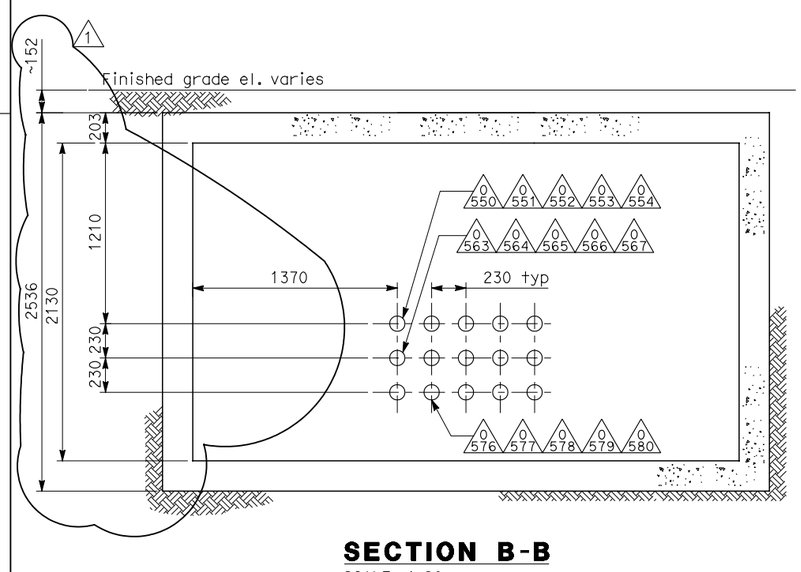

SECTION B-B
SCALE: 1:20

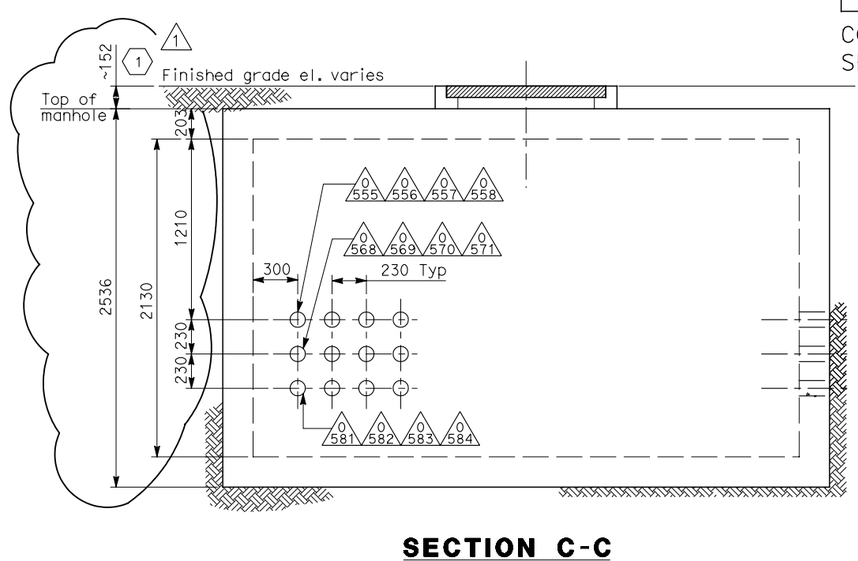

SECTION C-C
SCALE: 1:20

DETAILS
UNDERGROUND
MANHOLE PLANS AND SECTIONS
SCALE AS NOTED

E-14

ALL DIMENSIONS IN MILLIMETERS UNLESS OTHERWISE SHOWN

FOR REDUCED PLANS ORIGINAL SCALE IS IN MILLIMETERS 0 20 40 60 80

DGN FILE =>$REQUEST
USERNAME =>$USER

CU 04251 | EA 0120F1

STATE OF CALIFORNIA - DEPARTMENT OF TRANSPORTATION
Caltrans

DESIGN OVERSIGHT: BEHZAD GOLEMOHAMMADI

CALCULATED/DESIGNED BY: AB | DATE: 11/04 | REVISED BY
CHECKED BY: -- | --/-- | DATE REVISED

FILE: t:\13103\ms\pse\electrical\con1\13103es1571.dgn
DATE: 10-Jul-00 15:21

LAST REVISION 00-00-00
DATE PLOTTED => $DATE
TIME PLOTTED => $TIME

DIST	COUNTY	ROUTE	KILOMETER POST TOTAL PROJECT	SHEET No	TOTAL SHEETS
04	SF	80	13.2/13.9	98R1	1204

Jens Erlingsson 12/19/02
REGISTERED ELECTRICAL ENGINEER DATE

REGISTERED PROFESSIONAL ENGINEER
JENS ERLINGSSON
No. 8249
Exp. 9/30/06
ELECTRICAL
STATE OF CALIFORNIA

PLANS APPROVAL DATE

PB POWER, Inc.
A Parsons Brinckerhoff Company
303 Second St., Suite 700N
San Francisco, CA 94107-1317

The State of California or its officers or agents shall not be responsible for the accuracy or completeness of electronic copies of this plan sheet.

Caltrans now has a web site! To get to the web site, go to http://www.dot.ca.gov

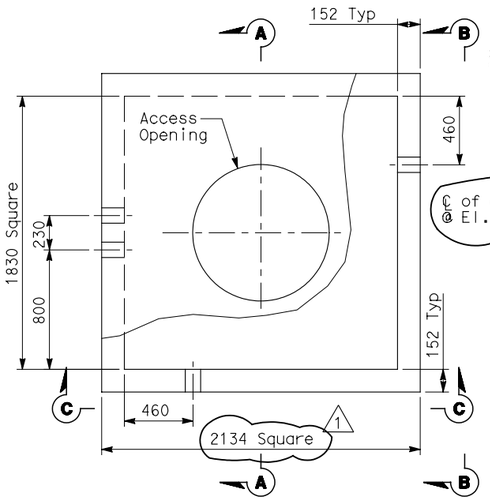

PLAN-MANHOLE-26
SCALE: 1:20 (12.47 kV)

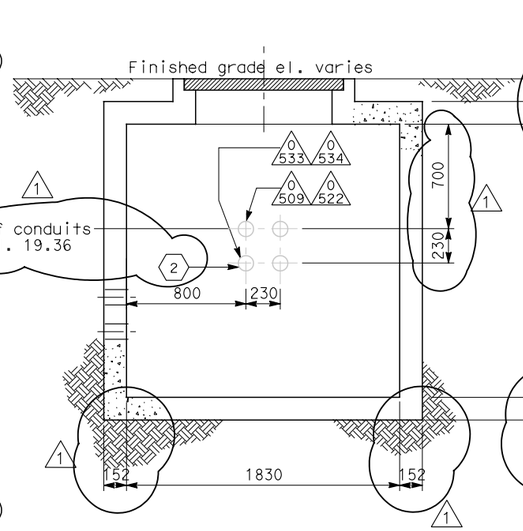

SECTION A-A
SCALE: 1:20

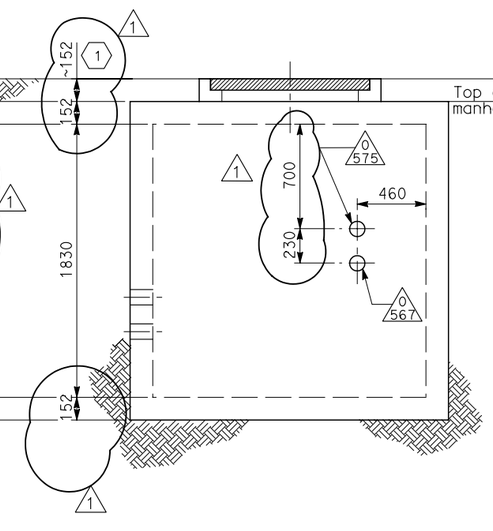

SECTION B-B
SCALE: 1:20

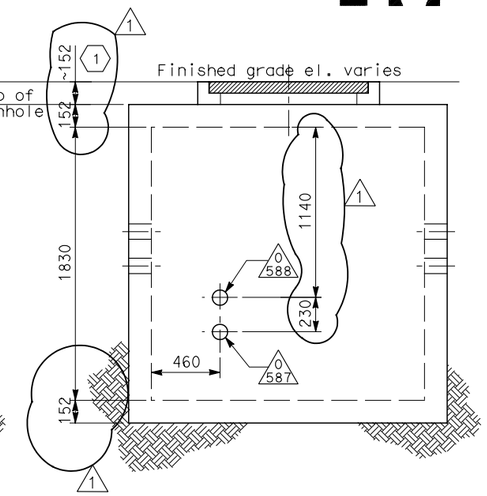

SECTION C-C
SCALE: 1:20

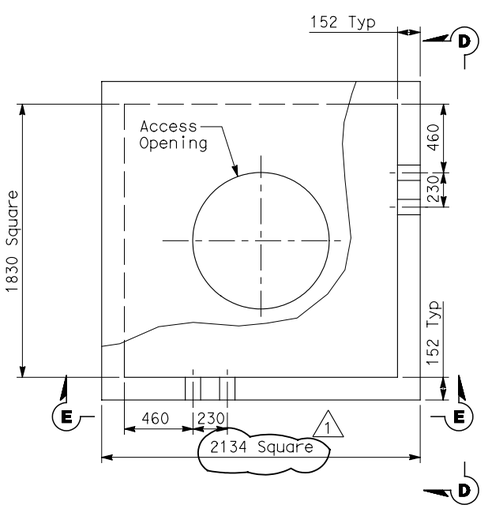

PLAN-MANHOLE-28
SCALE: 1:20 (Non-Caltrans Utilities)

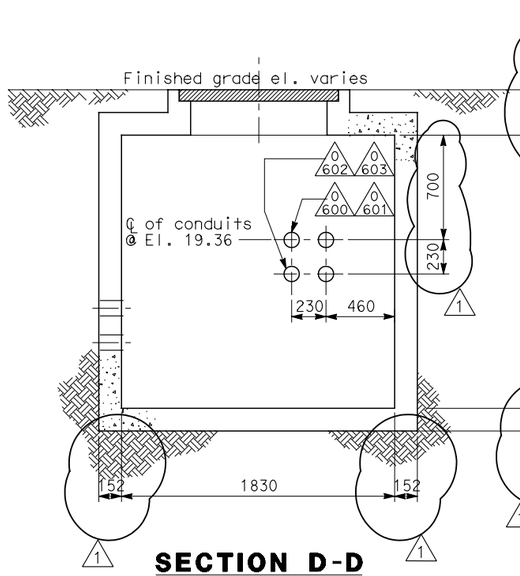

SECTION D-D
SCALE: 1:20

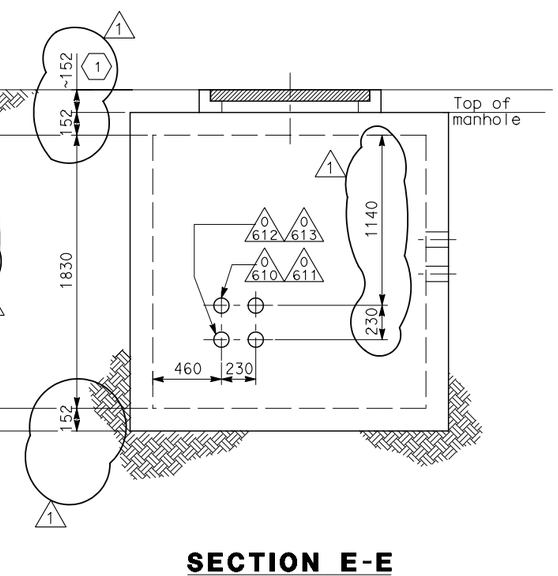

SECTION E-E
SCALE: 1:20

NOTES:

1. References:
   - For duct banks and manhole plan, see sheet E-11.
   - For typical manhole and duct bank details, see sheet E-17.
   - For duct bank sections, see sheets E-19 and E-23.
   - For circuit and conduit/cable tray schedules, see sheets starting at E-401
2. For other related work, not shown on this sheet, see Electrical Special Provisions.

SHEET NOTES:

1. Approximate distance of manhole necking or riser is from the finished grade and top of manhole. Maximum length of manhole necking or riser shall be 914 mm.
2. Not in contract. (Work included on contract 04-120P4).

MARK	DATE	DESCRIPTIONS	REV	CK	CCO NO.
1	1/10/06	Revised Manhole detail	CR	JE	11

REVISIONS

CONTRACT CHANGE ORDER NO. 11
SHEET 8 OF 13

DETAILS
UNDERGROUND
MANHOLE PLAN AND SECTIONS
SCALE AS NOTED

E-15

STATE OF CALIFORNIA - DEPARTMENT OF TRANSPORTATION
Caltrans

DESIGN OVERSIGHT: BEHZAD GOLEMOHAMMADI
CALCULATED/DESIGNED BY: AB | DATE 11/04 | REVISED BY
CHECKED BY: CYF | 11/01 | DATE REVISED

FOR REDUCED PLANS ORIGINAL SCALE IS IN MILLIMETERS 0 20 40 60 80
DGN FILE =>$REQUEST
USERNAME =>$USER
CU 04251
EA 0120F1
LAST REVISION 00-00-00
DATE PLOTTED => $DATE
TIME PLOTTED => $TIME

DIST	COUNTY	ROUTE	KILOMETER POST TOTAL PROJECT	SHEET No	TOTAL SHEETS
04	SF	80	13.2/13.9	99R1	1024

Caltrans Metric

Jens Erlingsson 12/19/02
REGISTERED ELECTRICAL ENGINEER DATE

PLANS APPROVAL DATE

REGISTERED PROFESSIONAL ENGINEER
JENS ERLINGSSON
No. 8249
Exp. 9/30/06
ELECTRICAL
STATE OF CALIFORNIA

PB POWER, Inc.
A Parsons Brinckerhoff Company
303 Second St., Suite 700N
San Francisco, CA 94107-1317

The State of California or its officers or agents shall not be responsible for the accuracy or completeness of electronic copies of this plan sheet.

Caltrans now has a web site! To get to the web site, go to http://www.dot.ca.gov

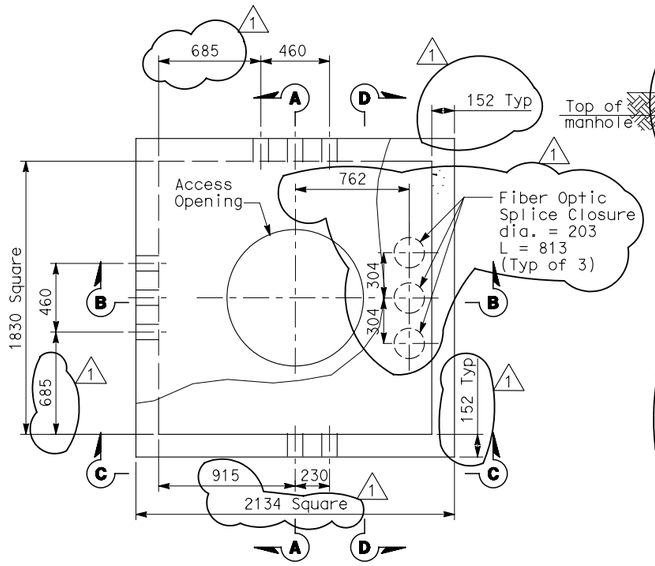

PLAN-MANHOLE-27
SCALE: 1:20 (TOS & COMMUNICATION)

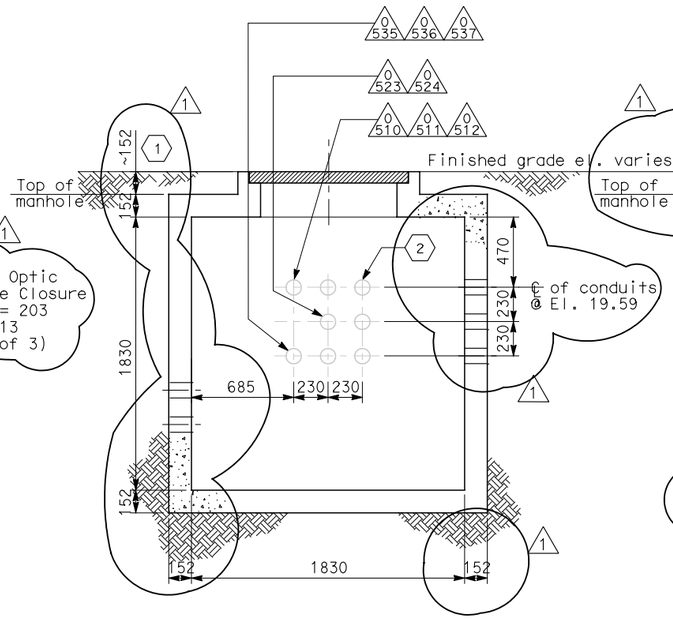

SECTION A-A
SCALE: 1:20

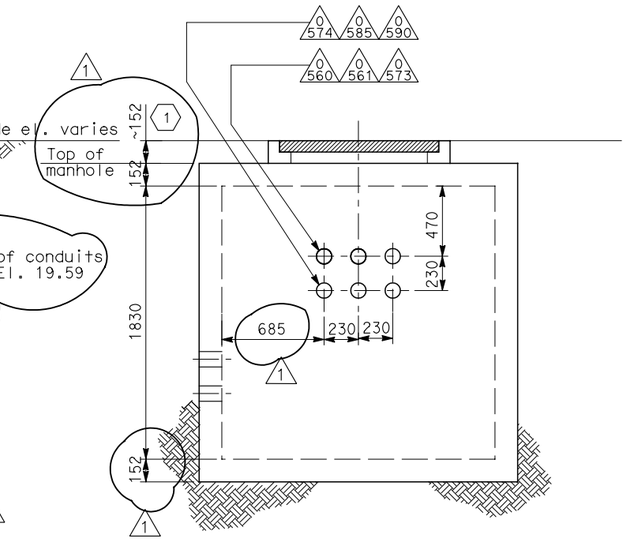

SECTION B-B
SCALE: 1:20

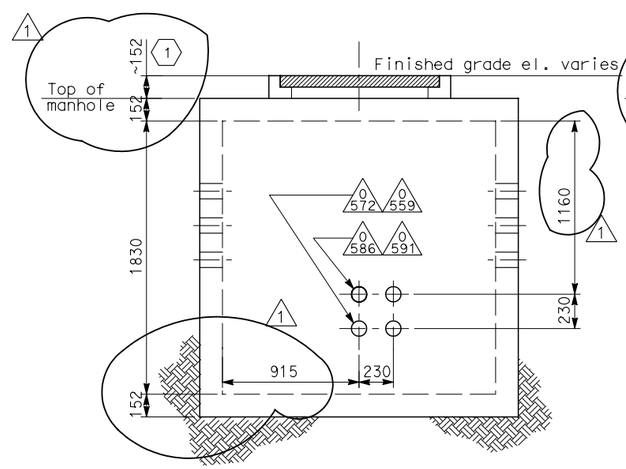

SECTION C-C
SCALE: 1:20

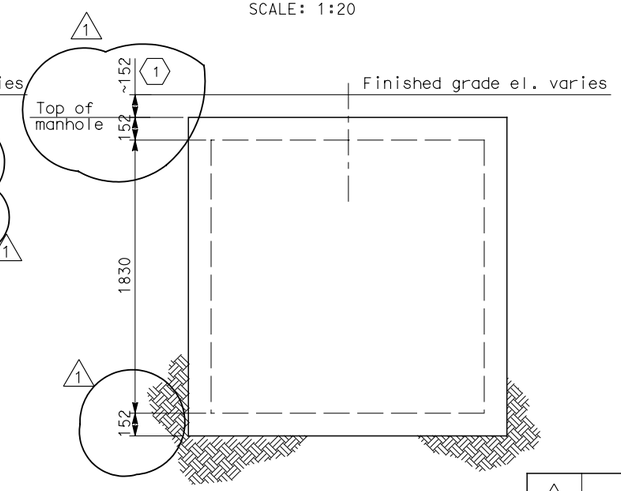

SECTION D-D
SCALE: 1:20

NOTES:

1. References:
   - For duct bank and manhole plan, see sheet E-11.
   - For typical duct bank and manhole details, see sheet E-17.
   - For duct bank sections, see sheet E-19.
   - For circuit and conduit/cable tray schedules, see sheets starting at E-401.
2. For other related work, not shown on this sheet, see Electrical Special Provisions.

SHEET NOTES:

1 Approximate distance of manhole necking or riser is from the finished grade and top of manhole. Maximum length of manhole necking or riser shall be 914 mm.

MARK	DATE	DESCRIPTIONS	REV	CK	CCO NO.
1	1/10/06	Revised Manhole detail	CR	JE	11

REVISIONS

CONTRACT CHANGE ORDER NO. 11
SHEET 9 OF 13

DETAILS
UNDERGROUND
MANHOLE PLAN AND SECTIONS
SCALE AS NOTED

E-16

STATE OF CALIFORNIA - DEPARTMENT OF TRANSPORTATION
Caltrans

DESIGN OVERSIGHT: BEHZAD GOLEMOHAMMADI
CALCULATED/DESIGNED BY: AB | DATE 11/04 | REVISED BY
CHECKED BY: -- | --/-- | DATE REVISED

FOR REDUCED PLANS ORIGINAL SCALE IS IN MILLIMETERS 0 20 40 60 80
DGN FILE =>$REQUEST
USERNAME =>$USER
CU 04251
EA 0120F1
LAST REVISION 00-00-00
DATE PLOTTED => $DATE
TIME PLOTTED => $TIME

DIST	COUNTY	ROUTE	KILOMETER POST TOTAL PROJECT	SHEET No	TOTAL SHEETS
04	SF	80	13.2/13.9	132R1	1204

Caltrans Metric

12/19/02
REGISTERED ELECTRICAL ENGINEER DATE

REGISTERED PROFESSIONAL ENGINEER
JENS ERLINGSSON
No. 8249
Exp. 9/30/06
ELECTRICAL
STATE OF CALIFORNIA

PLANS APPROVAL DATE

PB POWER, Inc.
A Parsons Brinckerhoff Company
303 Second St., Suite 700N
San Francisco, CA 94107-1317

The State of California or its officers or agents shall not be responsible for the accuracy or completeness of electronic copies of this plan sheet.

Caltrans now has a web site! To get to the web site, go to http://www.dot.ca.gov

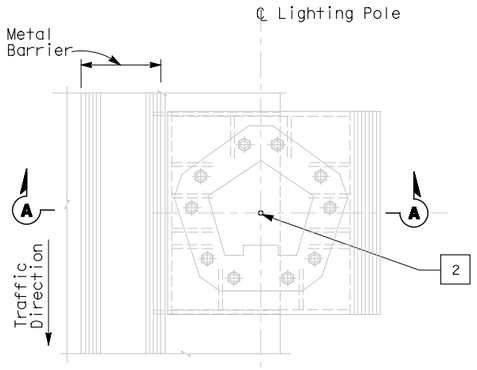

PLAN
CONDUIT STUB-UP PLAN FOR ROADWAY LIGHTING ON A METAL BASE
SCALE 1:20

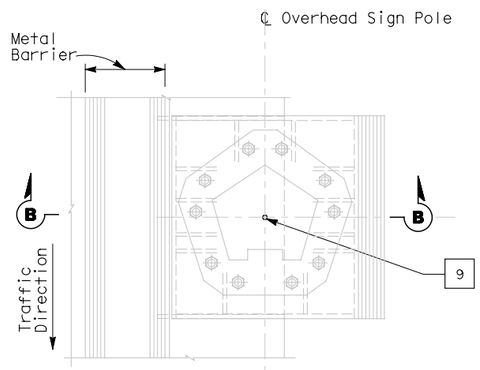

PLAN
CONDUIT STUB-UP PLAN FOR OVERHEAD SIGN ON A METAL BASE
SCALE 1:20

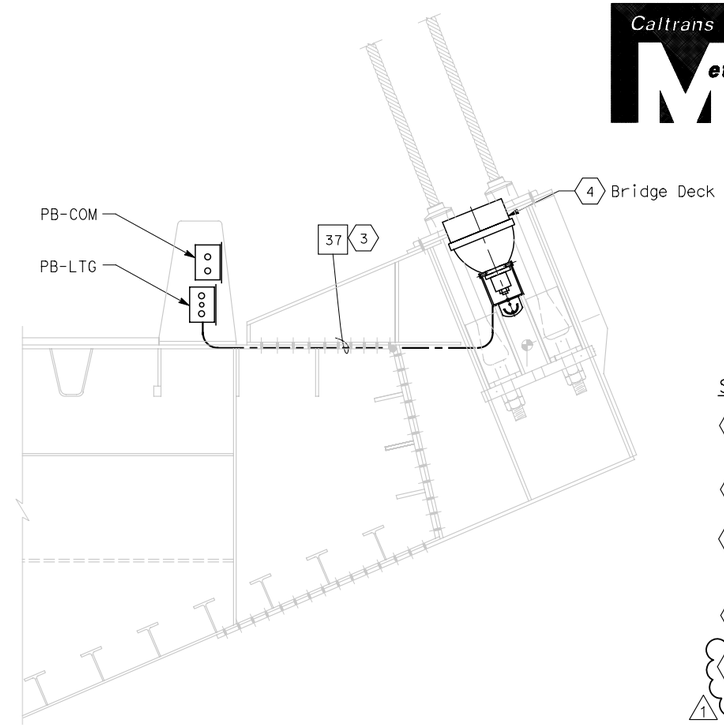

TYPICAL PYLON FLOODLIGHT CONDUIT LAYOUT
SCALE 1:20

SHEET NOTES:

1. Bond grounding bushing to ground lug of lighting pole with #6 bare copper wire.
2. Conduits for future light pipe shall continue from this pull box.
3. Conduit shall be clear of all piping and pipe sleeves. Route conduit on top of deck plate, outside of girder box.
4. For pylon floodlightting layout, see sheets E-47 & E-48.
5. See Utility Detail No. 1 (Sheet No. 965 of 1204) for conduit penetration through girder plate and lighting pole metal base. The Contractor shall install seglant between the sleeve and conduit for future light pipe, plug and cap sleeve to prevent water or moisture from passing inside the sleeve. (1)

MARK	DATE	DESCRIPTIONS	REV	CK	CCO NO.
1	10/16/06	Revised sheet notes.	LR	MG	11

REVISIONS

CONTRACT CHANGE ORDER NO. 11
SHEET 10 OF 13

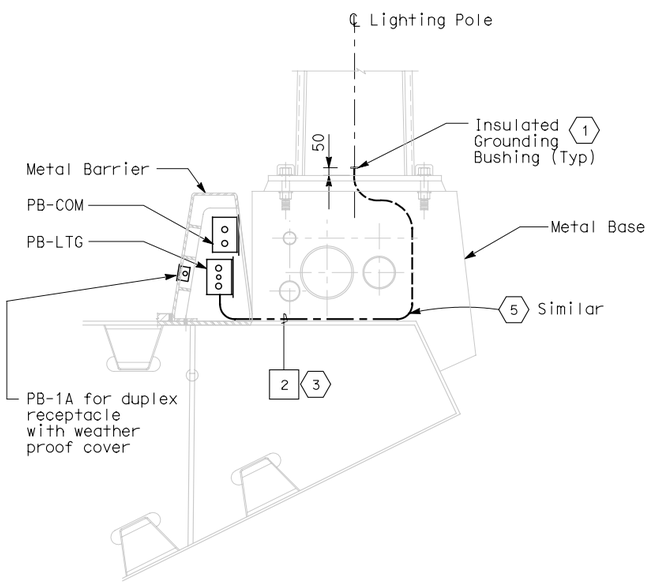

SECTION A-A
SCALE 1:20

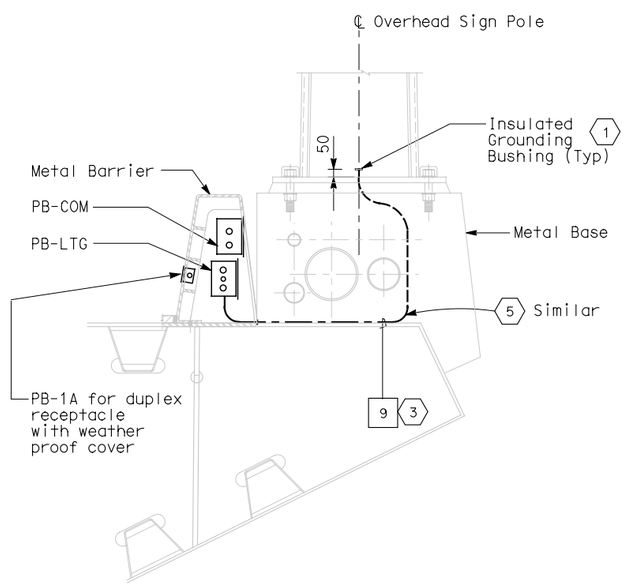

SECTION B-B
SCALE 1:20

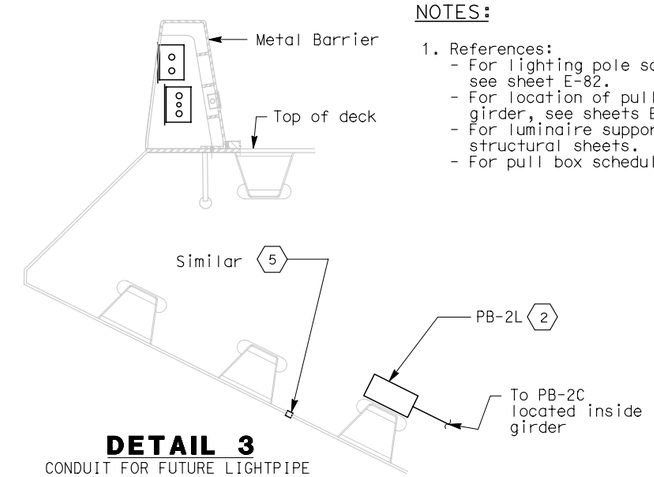

DETAIL 3
CONDUIT FOR FUTURE LIGHTPIPE CONNECTIONS ON A STEEL STRUCTURE
SCALE: 1:20

NOTES:

1. References:
   - For lighting pole schedule, see sheet E-82.
   - For location of pull boxes inside girder, see sheets E-96 thru E-101.
   - For luminaire support details, see structural sheets.
   - For pull box schedule, see sheet E-83.

DETAILS
SAS SUPERSTRUCTURE ROADWAY WESTBOUND CONDUIT LOCATIONS
SCALE AS NOTED

E-67

CALCULATED/ DESIGNED BY	KG	DATE 10/01	REVISED BY	DATE REVISED
CHECKED BY	AB	11/01		

DESIGN OVERSIGHT
BEHZAD GOLEMOHAMMADI

STATE OF CALIFORNIA - DEPARTMENT OF TRANSPORTATION
Caltrans

LAST REVISION 00-00-00

FOR REDUCED PLANS ORIGINAL SCALE IS IN MILLIMETERS 0 20 40 60 80

DGN FILE =>$REQUEST
USERNAME =>$USER

CU 04251

EA 0120F1

DIST	COUNTY	ROUTE	KILOMETER POST TOTAL PROJECT	SHEET No	TOTAL SHEETS
04	SF	80	13.2/13.9	133R1	1204

REGISTERED ELECTRICAL ENGINEER 12/19/02 DATE

12-6-04
PLANS APPROVAL DATE

REGISTERED PROFESSIONAL ENGINEER JENS ERLINGSSON No. 8249 Exp. 9/30/06 ELECTRICAL STATE OF CALIFORNIA

PB POWER, Inc.
A Parsons Brinckerhoff Company
303 Second St., Suite 700N
San Francisco, CA 94107-1317

The State of California or its officers or agents shall not be responsible for the accuracy or completeness of electronic copies of this plan sheet.

Caltrans now has a web site! To get to the web site, go to http://www.dot.ca.gov

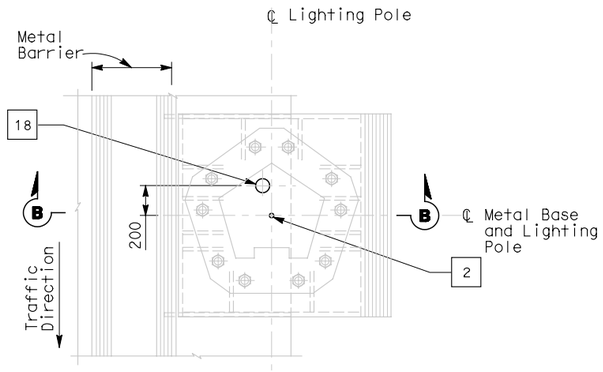

PLAN
CONDUIT STUB-UP PLAN FOR ROADWAY LIGHTING AND MVDS ON METAL BASE
SCALE 1:20

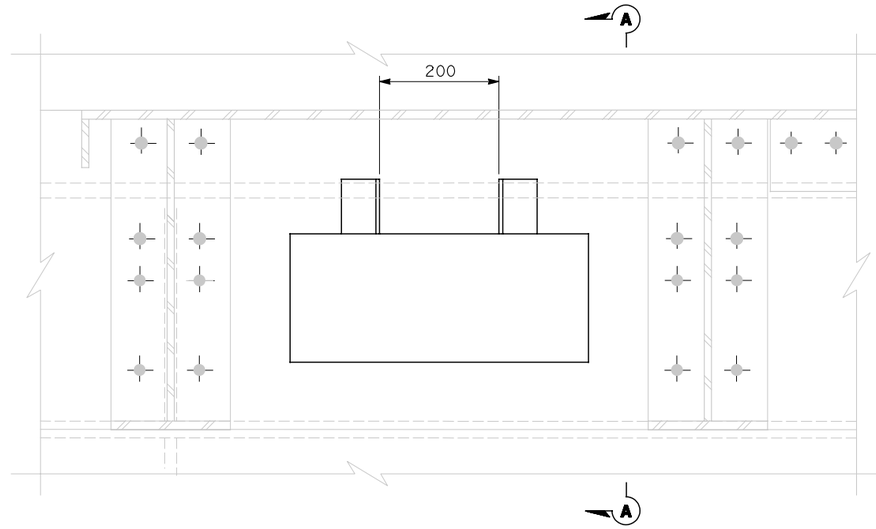

PLAN
PULL BOX IN STEEL BARRIER
SCALE 1:5

SHEET NOTES:

(1) Bond grounding bushing to ground lug of lighting pole or overhead sign post with #6 bare copper wire.

(2) Conduit shall clear all piping and pipe sleeves. Route conduit on top of deck plate, outside of girder box.

(3) See Utility Detail No. 1 (Sheet No. 965 of 1204) for conduit penetration through girder plate and lighting pole metal base. The Contractor shall install sealant between the sleeve and conduit to prevent water or moisture from passing inside the sleeve.

△1

NOTES:

1. References:
   - For installation and typical details of TOS equipment, see sheets E-344 thru E-357.
   - For pull box schedule, see sheet E-83.
   - For TOS field element locations, see sheet E-341.

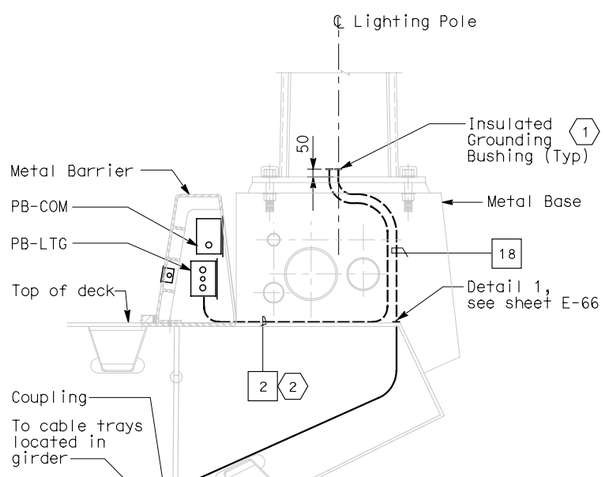

SECTION B-B
SCALE 1:20

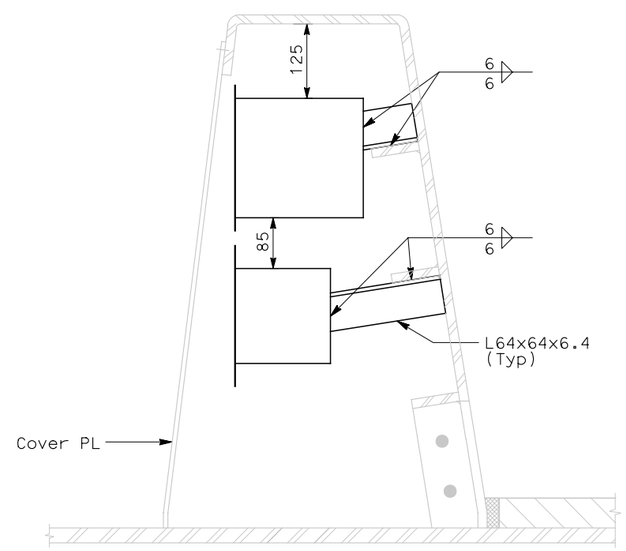

SECTION A-A
SCALE 1:5

MARK	DATE	DESCRIPTIONS	REV	CK	CCO NO.
△1	10/16/06	Revised sheet notes.	LR	MG	11

REVISIONS

CONTRACT CHANGE ORDER NO. 11
SHEET 11 OF 13

DETAILS
SAS SUPERSTRUCTURE ROADWAY WESTBOUND CONDUIT LOCATIONS
SCALE AS NOTED

E-68

DATE	REVISED BY	DATE	REVISED
10/01	KG	11/01	AB

CALCULATED/DESIGNED BY — CHECKED BY

DESIGN OVERSIGHT — BEHZAD GOLEMOHAMMADI

STATE OF CALIFORNIA - DEPARTMENT OF TRANSPORTATION

Caltrans

LAST REVISION 00-00-00 — DATE PLOTTED => $DATE — TIME PLOTTED => $TIME

FOR REDUCED PLANS ORIGINAL SCALE IS IN MILLIMETERS 0 20 40 60 80

DGN FILE =>$REQUEST
USERNAME =>$USER

CU 04251 — EA 0120F1

DIST	COUNTY	ROUTE	KILOMETER POST TOTAL PROJECT	SHEET No	TOTAL SHEETS
04	SF	80	13.2/13.9	208R1	1204

Caltrans Metric

Jens Erlingsson 12/19/02
REGISTERED ELECTRICAL ENGINEER DATE

12-6-04
PLANS APPROVAL DATE

REGISTERED PROFESSIONAL ENGINEER
JENS ERLINGSSON
No. 8249
Exp. 9/30/06
ELECTRICAL
STATE OF CALIFORNIA

PB POWER, Inc.
A Parsons Brinckerhoff Company
303 Second St., Suite 700N
San Francisco, CA 94107-1317

The State of California or its officers or agents shall not be responsible for the accuracy or completeness of electronic copies of this plan sheet.

Caltrans now has a web site! To get to the web site, go to http://www.dot.ca.gov

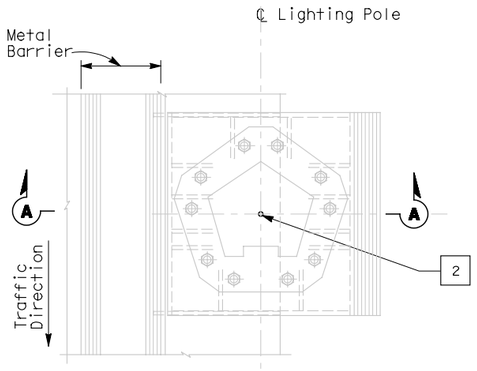

PLAN
TYPICAL CONDUIT STUB PLAN FOR ROADWAY LIGHTING ON A METAL BASE
SCALE 1:20

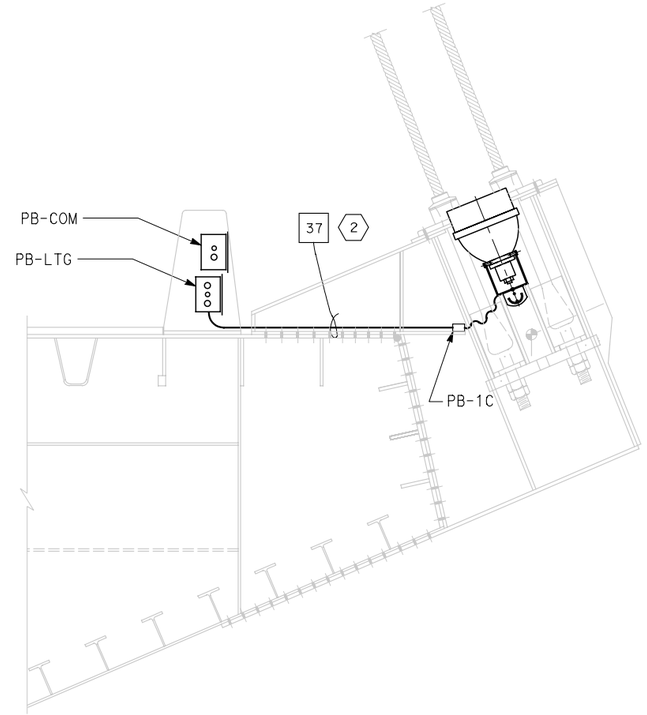

TYPICAL UPLIGHT CONDUIT LAYOUT
SCALE 1:20

SHEET NOTES:

1. Bond grounding bushing to ground lug of lighting pole with #6 bare copper wire.
2. Conduit shall be clear of all piping and pipe sleeves. Route conduit on top of deck plate, outside of girder box.
3. See Utility Detail No. 1 (Sheet No. 965 of 1204) for conduit penetration through girder plate and lighting pole metal base. The Contractor shall install sealant between the sleeve and conduit for future light pipe, plug and cap sleeve to prevent water or moisture from passing inside the sleeve. (1)

NOTES:

1. References:
   - For lighting pole schedule, see sheet E-168.
   - For location of pull boxes inside girder, see sheets E-181 thru E-186.
   - For luminaire support details, see structural sheets.

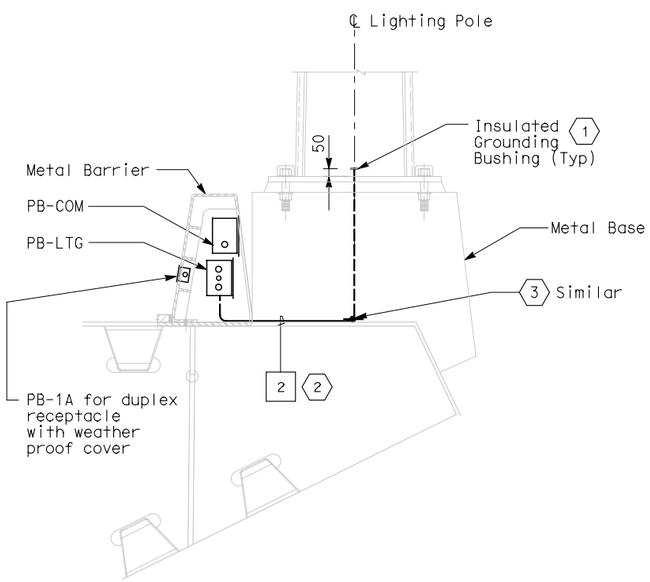

SECTION A-A
SCALE 1:20

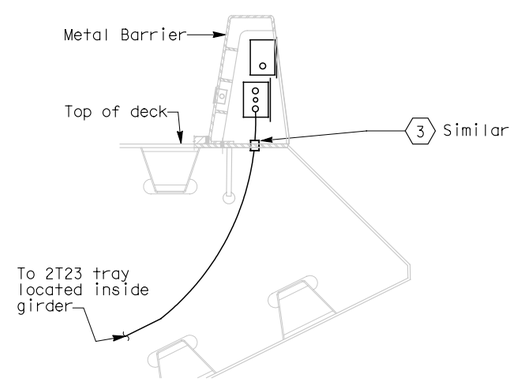

DETAIL 3
CONDUIT FOR FUTURE LIGHTPIPE CONNECTIONS ON A STEEL STRUCTURE
SCALE 1:20

MARK	DATE	DESCRIPTIONS	REV	CK	CCO NO.
1	10/16/06	Revised sheet notes.	LR	MG	11

REVISIONS

CONTRACT CHANGE ORDER NO. 11
SHEET 12 OF 13

DETAILS
SAS SUPERSTRUCTURE ROADWAY EASTBOUND CONDUIT LOCATIONS
SCALE AS NOTED

E-161

ALL DIMENSIONS ARE IN MILLIMETERS UNLESS OTHERWISE SHOWN.

STATE OF CALIFORNIA - DEPARTMENT OF TRANSPORTATION
Caltrans

DESIGN OVERSIGHT: BEHZAD GOLEMOHAMMADI
CALCULATED/DESIGNED BY: KG DATE 10/01
CHECKED BY: AB 11/01
REVISED BY
DATE REVISED

FOR REDUCED PLANS ORIGINAL SCALE IS IN MILLIMETERS 0 20 40 60 80
DGN FILE =>$REQUEST
USERNAME =>$USER
CU 04251
EA 04201F2 0F4
LAST REVISION 00-00-00

DIST	COUNTY	ROUTE	KILOMETER POST TOTAL PROJECT	SHEET No	TOTAL SHEETS
04	SF	80	13.2/13.9	233 R1	1204

Jens Erlingsson 12/19/02
REGISTERED ELECTRICAL ENGINEER DATE

PLANS APPROVAL DATE

REGISTERED PROFESSIONAL ENGINEER
JENS ERLINGSSON
No. 8249
Exp. 9/30/06
ELECTRICAL
STATE OF CALIFORNIA

PB POWER, Inc.
A Parsons Brinckerhoff Company
303 Second St., Suite 700N
San Francisco, CA 94107-1317

The State of California or its officers or agents shall not be responsible for the accuracy or completeness of electronic copies of this plan sheet.

Caltrans now has a web site! To get to the web site, go to http://www.dot.ca.gov

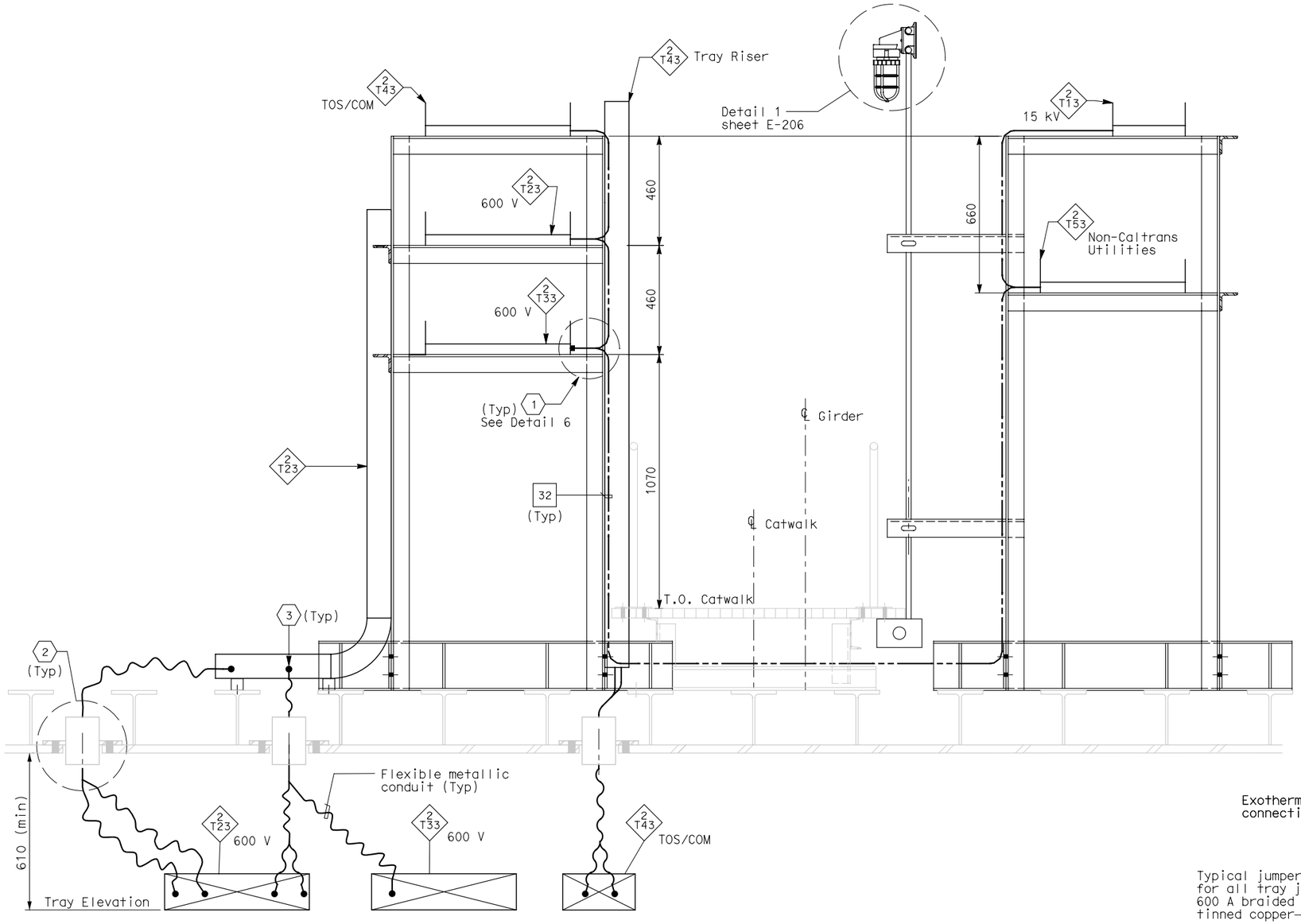

SECTION D-D - TYPICAL CABLE TRAY SUPPORT

SCALE: 1:10

SHEET NOTES:

1. Provide connections to 500 kcmil system ground for all cable trays, every 200 meters.
2. For location of conduit penetrations thru girder plate, see Utility Detail No. 1 and Utility Layout sheets respectively. To prevent moisture from passing inside the sleeve, Contractor shall install sealant after conduit have been installed. Spares shall be plugged and capped.
3. Contractor shall provide hooked conduit support grips for each conduit or groups of conduits passing through the conduit penetrations. Contractor shall provide support for grips as needed.

NOTES:

1. See structural drawings for Catwalk Support Details.
2. For SAS Superstructure Girder access detail #2, see structural dwgs.
3. Ground cable shall be installed along full length of the 15 kV cable tray only.
4. For typical cable tray support details, see AS-sheets.

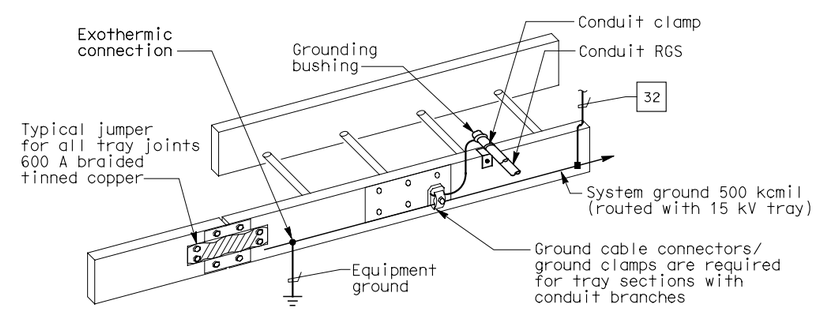

GROUNDING OF METALLIC RACEWAYS

DETAIL 6

MARK	DATE	DESCRIPTIONS	REV	CK	CCO NO.
1	1/10/06	Revised note. Bidder Inquiry #330.	CR	JE	11

REVISIONS

CONTRACT CHANGE ORDER NO. 11
SHEET 13 OF 13

DETAILS
SAS SUPERSTRUCTURE GIRDER EASTBOUND
TYPICAL CABLE TRAY AND GROUNDING INSTALLATION 2

SCALE AS NOTED

E-208

ALL DIMENSIONS ARE IN MILLIMETERS UNLESS OTHERWISE SHOWN.

FOR REDUCED PLANS ORIGINAL SCALE IS IN MILLIMETERS 0 20 40 60 80

DGN FILE =>$REQUEST
USERNAME =>$USER

CU 04251 | EA 0120F1

STATE OF CALIFORNIA - DEPARTMENT OF TRANSPORTATION
Caltrans

DESIGN OVERSIGHT: BEHZAD GOLEMOHAMMADI

CALCULATED/DESIGNED BY: EDC | DATE 08/02 | REVISED BY
CHECKED BY: CYF | 3/04 | DATE REVISED

LAST REVISION 00-00-00 | DATE PLOTTED => $DATE | TIME PLOTTED => $TIME

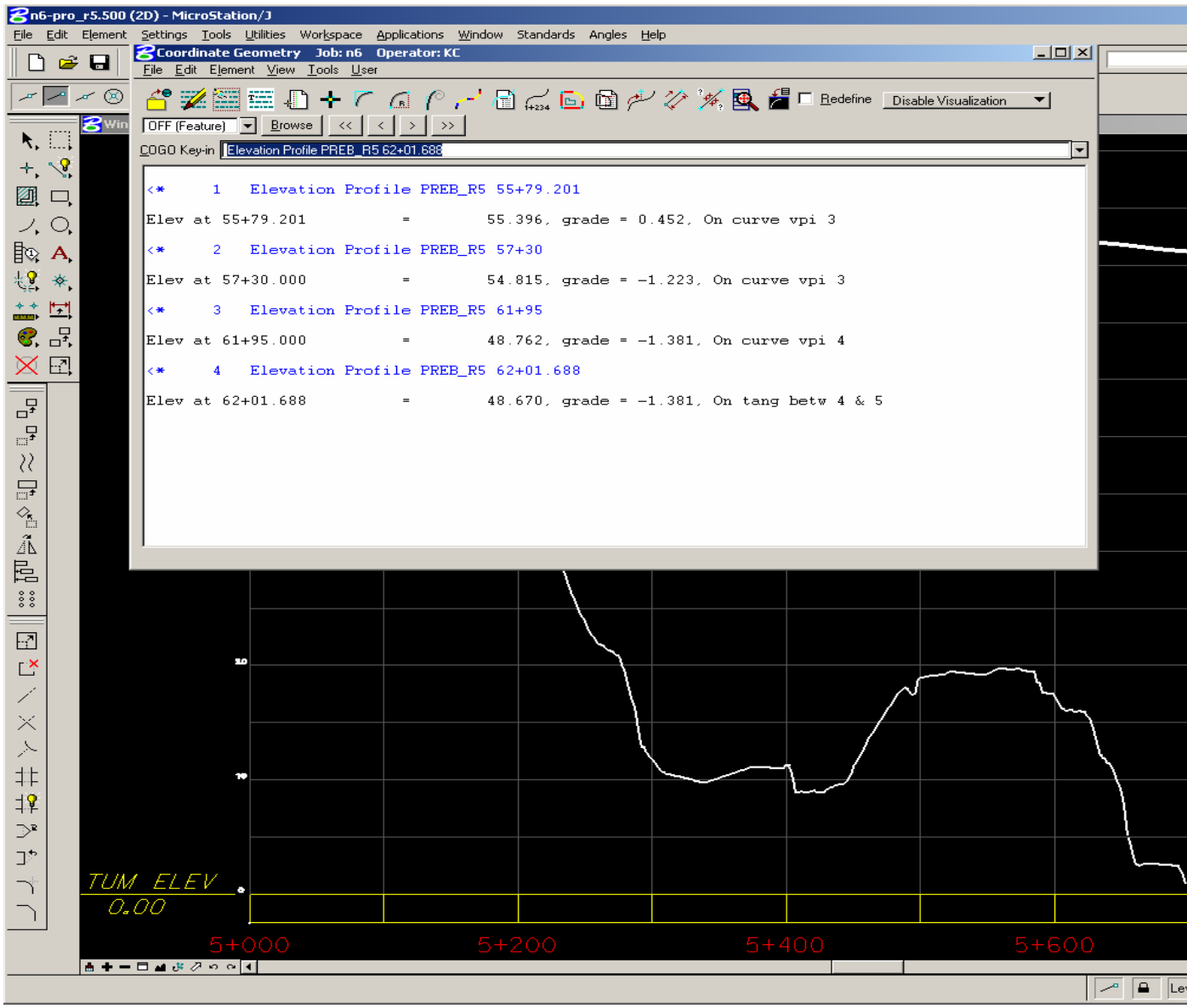
n6-pro_r5.500 (2D) - MicroStation/J
File Edit Element Settings Tools Utilities Workspace Applications Window Standards Angles Help
Coordinate Geometry Job: n6 Operator: KC
File Edit Element View Tools User
Redefine
Disable Visualization
OFF (Feature)
Browse
COGO Key-in
Elevation Profile PREB_R5 62+01.688
<* 1 Elevation Profile PREB_R5 55+79.201
Elev at 55+79.201 = 55.396, grade = 0.452, On curve vpi 3
<* 2 Elevation Profile PREB_R5 57+30
Elev at 57+30.000 = 54.815, grade = -1.223, On curve vpi 3
<* 3 Elevation Profile PREB_R5 61+95
Elev at 61+95.000 = 48.762, grade = -1.381, On curve vpi 4
<* 4 Elevation Profile PREB_R5 62+01.688
Elev at 62+01.688 = 48.670, grade = -1.381, On tang betw 4 & 5
TUM ELEV
0.00
5+000
5+200
5+400
5+600

STATE OF CALIFORNIA - DEPARTMENT OF TRANSPORTATION

CONTRACT CHANGE ORDER

Change Requested by: Engineer

CCO: 15	Suppl. No. 0	Contract No. 04 - 0120F4	Road SF-80-13.2/13.9	FED. AID LOC.:

To: AMERICAN BRIDGE/FLUOR ENTERPRISES INC A JOINT VENT

You are directed to make the following changes from the plans and specifications or do the following described work not included in the plans and specifications for this contract. ***NOTE: This change order is not effective until approved by the Engineer.***

Description of work to be done, estimate of quantities and prices to be paid. (Segregate between additional work at contract price, agreed price and force account.) Unless otherwise stated, rates for rental of equipment cover only such time as equipment is actually used and no allowance will be made for idle time. This last percentage shown is the net accumulated increase or decrease from the original quantity in the Engineer's Estimate.

Adjustment of Compensation at Lump Sum:

Allow the construction of the W2 Cap Beam before the placement of the Hinge K Pipe Beam Assembly and address Contractor Request For Information (RFI's) 130R0, 132R0, 134R0, 246R0, 246R1, 275R0, 275R2, 304R0, 311R0, 400R0, 406R0, 421R0 and 617R0 as shown on Sheets Two (2) through Twenty (20) of this change order.

The following revised sheets detail all changes:

Contract Plan Sheet Nos. 459R2, 460R2, 461R2, 471R2, 497S25R1, 730R1, 740R1, 765R1, 766R1, 767R1, 768R1, 769R1, 791R1, 842R1, 843R1, 844R1, 845R1, 913R1 and 980R1 (of 1204).

For this work the Contractor shall receive and accept the sum of $230,285.00. This sum constitutes full and complete compensation for furnishing all labor, material, tools and incidentals including all markups by reason of this change.

There is no adjustment of contract time for this change.

Cost of Adjustment of Compensation at Lump Sum $230,285.00

Estimated Cost: Increase ☑ Decrease ☐ $230,285.00

By reason of this order the time of completion will be adjusted as follows: 0 days

Submitted by

Signature	Resident Engineer	Date
Gilel Klebanov	Gil Klebanov for Gary Pursell, RE	12/11/2007

Approval Recommended by

Signature	Supervising Bridge Engineer	Date
[illegible]	Richard Morrow, P.E., Sup. BE	12/6/2007

Engineer Approval by

Signature	Supervising Transportation Engineer	Date
Gary Pursell	Gary Pursell, P.E., Sup. TE	1/9/2008

We the undersigned contractor, have given careful consideration to the change proposed and agree, if this proposal is approved, that we will provide all equipment, furnish the materials, except as may otherwise be noted above, and perform all services necessary for the work above specified, and will accept as full payment therefor the prices shown above.

NOTE: If you, the contractor, do not sign acceptance of this order, your attention is directed to the requirements of the specifications as to proceeding with the ordered work and filing a written protest within the time therein specified.

Contractor Acceptance by

Signature	(Print name and title)	Date
[illegible]	Michael D. Flowers Project Director	12-18-07

STATE OF CALIFORNIA - DEPARTMENT OF TRANSPORTATION

CONTRACT CHANGE ORDER MEMORANDUM

TO: Pete Siegenthaler, Prin. TE / Gary Pursell, P.E., Sup T.E.	FILE: E.A. 04 - 0120F4 CO-RTE-PM SF-80-13.2/13.9 FED. NO.
FROM: Gary Pursell, P.E., Sup.T.E.	
CCO#: 15 SUPPLEMENT#: 0 Category Code: CHPT	CONTINGENCY BALANCE (incl. this change) $140,497,037.24
COST: $230,285.00 INCREASE ☑ DECREASE ☐	HEADQUARTERS APPROVAL REQUIRED? ☑ YES ☐ NO
SUPPLEMENTAL FUNDS PROVIDED: $0.00	IS THIS REQUEST IN ACCORDANCE WITH ENVIRONMENTAL DOCUMENTS? ☑ YES ☐ NO
CCO DESCRIPTION: W2 - Hinge K and Saddle Modifications	**PROJECT DESCRIPTION:** CONSTRUCT SELF-ANCHORED SUSPENSION BRIDGE

Original Contract Time:	Time Adj. This Change:	Previously Approved CCO Time Adjustments:	Percentage Time Adjusted: (Including this change)	Total # of Unreconciled Deferred Time CCO(s): (Including this change)
2490 Day(s)	0 Day(s)	30 Day(s)	1 %	0

THIS CHANGE ORDER PROVIDES FOR:

Allowing the construction of the W2 Cap Beam before the placement of the Hinge K Pipe Beam Assembly by performing the following work:

1. Remove shear studs and shear pipe from the 100-mm Pipe Beam base plates and replace with a 5-mm amplitude roughened bearing face plate and a roughened surface for the Cap Beam concrete that is in contact with the grout.
2. Provide a 65-mm grout pad between the Pipe Beam base plates and the west face of the W2 Cap Beam.
3. Replace the embedded ducts (for the HS Bar 75-mm) with an approved bond breaking system on the HS bars.
4. Install the Hinge K Pipe Beam assemblies in Stage 5 after load transfer.
5. Provide support frame, templates and extra nuts to fully support the 75-mm HS Macalloy bars in the W2 Cap Beam.

The installation of the Hinge K Pipe Beam Assembly is a near-critical path activity. By allowing the construction of the W2 Cap Beam before the placement of the Hinge K pipe beams the potential of this becoming a critical activity diminishes. This change reduces the risk that a fabrication delay of the pipe beams could impact the critical path. Restaging the pipe beam installation also reduces the Department's risk significantly in regards to the connection to the YBI transition structure. During the construction of the W2 Cap Beam there is a potential for differential settlement and misalignment of the pipe beams after the concrete pour and post-tensioning procedures. Installing the pipe beams after concrete placement and post-tensioning at the W2 Cap Beam helps assure that the pipe beams will be installed in their correct position and align properly with the YBI transition structure.

This work shall be performed at Adjustment of Compensation at Lump Sum for a cost of $230,285.00, which can be financed from the contingency fund. A detailed account of the costs shall be placed in the project files.

No time adjustment is warranted, as this change order does not affect the controlling operation.

This change order received concurrence from the Designer or Record, Design Oversight, Maintenance, the Resident Engineer, Structure Representative and the Principal Engineer on the project.

This change order received an Issue and Approve from the Division of Construction on Dec. 11, 2007. A copy is attached for your reference.

ADA Notice: For individuals with sensory disabilities, this document is available in alternate formats. For information call: (916) 654-6410 or TDD (916) 654-3880 or write Records and Forms Management, 1120 N Street, MS-89, Sacramento, CA 95814.

CONCURRED BY:			
Construction Engineer:	Res. Eng., Gary Pursell, Sup. TE	Date	2/8/07
Bridge Engineer:	Struct Rep, Rick Morrow, Sup TE	Date	2/7/07
Project Engineer:	Design of Record, Marwan Nader,	Date	3/16/07
Project Manager:	Proj Manager, Ken Terpstra	Date	3/15/07
~~FHWA Rep.~~:	HQ, Rob Kobal	Date	2/9/07
~~Environmental~~:	PCE, Pete Siegenthaler, Prin TE	Date	2/9/07
Other (specify):	CT Oversight, Reza Valizadeh, P.E	Date	4/4/07
Other (specify):	Struct Maint, Bill Zanetich, P.E.	Date	4/4/07
District Prior Approval By:		Date	
HQ (Issue Approve) By:	HQ, Ken Darby	Date	12/11/07
Resident Engineer's Signature:		Date	
Gary Pursell		1/9/2008	

ESTIMATE OF COST

	THIS REQUEST	TOTAL TO DATE
ITEMS	$0.00	$0.00
FORCE ACCOUNT	$0.00	$0.00
AGREED PRICE	$0.00	$0.00
ADJUSTMENT	$230,285.00	$230,285.00
TOTAL	$230,285.00	$230,285.00

FEDERAL PARTICIPATION

☐ PARTICIPATING ☐ PARTICIPATING IN PART ☑ NONE
☐ NON-PARTICIPATING (MAINTENANCE) ☐ NON-PARTICIPATING

FEDERAL SEGREGATION (If more than one Funding Source or P.I.P. type)
☑ CCO FUNDED PER CONTRACT ☐ CCO FUNDED AS FOLLOWS

FEDERAL FUNDING SOURCE	PERCENT

ADA Notice: For individuals with sensory disabilities, this document is available in alternate formats. For information call: (916) 654-6410 or TDD (916) 654-3880 or write Records and Forms Management, 1120 N Street, MS-89, Sacramento, CA 95814.

Caltrans now has a web site! To get to the web site, go to: http://www.dot.ca.gov

MARK	DATE	DESCRIPTIONS	BY	CH'D	CCO#
2	01/31/07	CORROSION PROTECTION	JD	AS	16
1	07/21/06	W2 CAP BEAM ISD	JD	NV	23

REVISIONS

CONTRACT CHANGE ORDER NO. ____
SHEET ___ OF ___

REGISTERED PROFESSIONAL ENGINEER James P. Duxbury No. C 64677 Exp. 06/30/07 CIVIL STATE OF CALIFORNIA

FOR REVISIONS ONLY

Caltrans Metric

DIST.	COUNTY	ROUTE	KILOMETER POST TOTAL PROJECT	SHEET NO.	TOTAL SHEETS
04	SF	80	13.2/13.9	462R2	1204

REGISTERED ENGINEER - CIVIL

12-6-04
PLANS APPROVAL DATE

REGISTERED PROFESSIONAL ENGINEER John Sun No. C 54648 Exp. 12/31/05 CIVIL STATE OF CALIFORNIA

The State of California or its officers or agents shall not be responsible for the accuracy or completeness of electronic copies of this plan sheet.

T.Y. LIN / MOFFATT & NICHOL
825 BATTERY STREET
SAN FRANCISCO, CA 94111

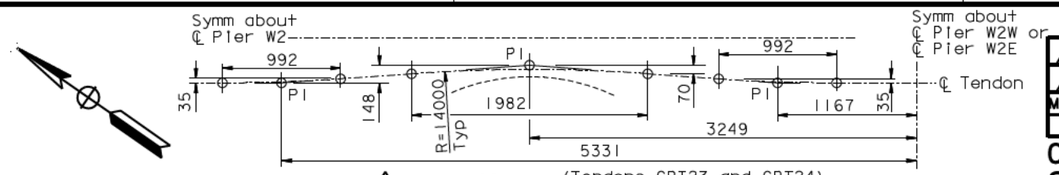

⚠1 DETAIL A'
1:25
(Tendons CBT23 and CBT24)
(Tendons CBT30 and CBT31)

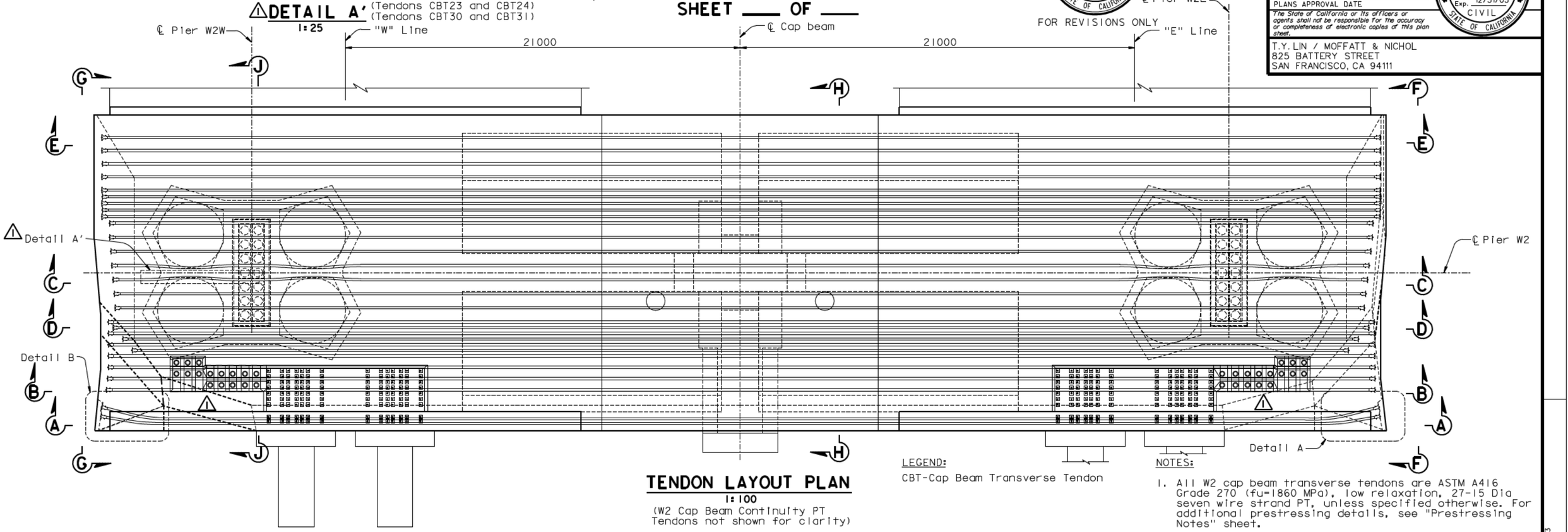

TENDON LAYOUT PLAN
1:100
(W2 Cap Beam Continuity PT
Tendons not shown for clarity)

LEGEND:
CBT-Cap Beam Transverse Tendon

NOTES:

1. All W2 cap beam transverse tendons are ASTM A416 Grade 270 (fu=1860 MPa), low relaxation, 27-15 Dia seven wire strand PT, unless specified otherwise. For additional prestressing details, see "Prestressing Notes" sheet.
2. For Section A-A, see "W2 Cap Beam Post-Tensioning Details No.2" sheet.
3. For Sections B-B through E-E, see "W2 Cap Beam Post-Tensioning Details No.3" sheet.
4. For Sections F-F through J-J, see "W2 Cap Beam Post-Tensioning Details No.4" sheet.
5. For bikepath details near cap beam, see "Bikepath Details" sheets.
6. For PT blockout dimensions, see "W2 Cap Beam Blockout Details" sheets.
7. Jacking force in the W2 cap beam transverse tendons (CBT1-CBT36) shall be 5265 kN typical.
8. For general stressing sequence, see "Pier W2 Construction Sequence" sheet.
9. For "W2 Cap Beam Post-Tensioning Details" sheets, the Contractor shall verify all controlling field dimensions before ordering or fabricating any material.
10. W2 cap beam elevations are to top of finished concrete and do not include overlay thickness.

ALL DIMENSIONS ARE IN MILLIMETERS UNLESS OTHERWISE SHOWN

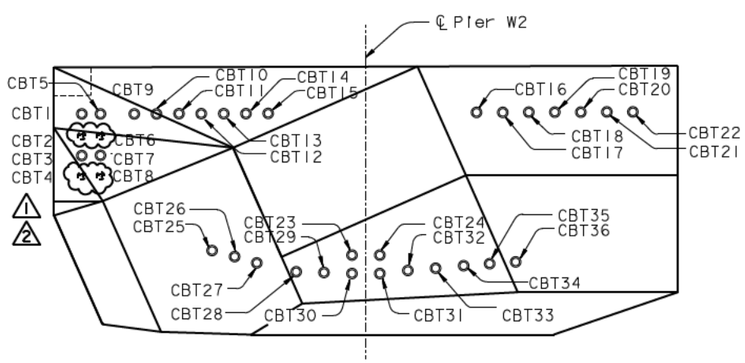

TENDON DESIGNATION
1:80

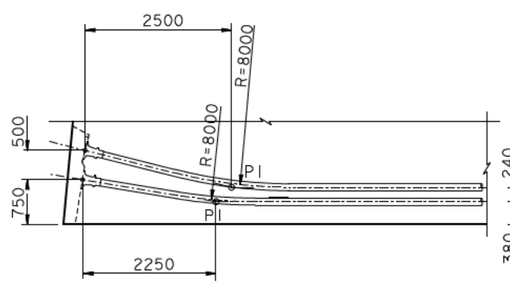

DETAIL B
1:50
(Tendons CBT1 and CBT5)
⚠1 (Tendons CBT2 thru CBT8 similar)

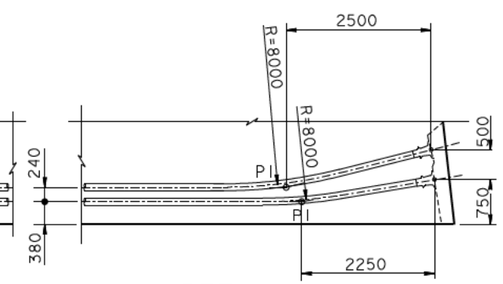

DETAIL A
1:50
(Tendons CBT1 and CBT5)
⚠1 (Tendons CBT2 thru CBT8 similar)

SAN FRANCISCO OAKLAND BAY BRIDGE
EAST SPAN SEISMIC SAFETY PROJECT
SELF-ANCHORED SUSPENSION BRIDGE
(SUPERSTRUCTURE & TOWER)

W2 CAP BEAM POST-TENSIONING DETAILS NO. 1

R. Valizadeh/V. Toan/Y.L./W.L./F.C.
DESIGN OVERSIGHT
SIGN OFF DATE 01/31/07

	BY	CHECKED
DESIGN	J. Sun	M. Chen
DETAILS	J. Duxbury	M. Chen
QUANTITIES	S. Shi	D. Harrison

PREPARED FOR THE STATE OF CALIFORNIA DEPARTMENT OF TRANSPORTATION

R. Manzanarez
PROJECT ENGINEER

BRIDGE NO. 34-0006L/R
KILOMETER POST 13.2/13.9

CU 04
EA 0120F1

Rev. Date: 5-18-98

ORIGINAL SCALE IN MILLIMETERS FOR REDUCED PLANS 0 10 20 30 40 50 60 70 80 90 100

DISREGARD PRINTS BEARING EARLIER REVISION DATES

REVISION DATES (PRELIMINARY STAGE ONLY) 09/28/99 05/31/01 04/26/02 07/24/02 12/19/02

SHEET 045R2 OF

FILE -> I:\bb\04-012001\sas\contract plans and cco\cco\in progress\cco#16\aecpt01.dgn

USERNAME -> visitor DATE PLOTTED => 15 MAR 2007 TIME PLOTTED => 15:12:43

100 % PS&E

DIST.	COUNTY	ROUTE	KILOMETER POST TOTAL PROJECT	SHEET NO.	TOTAL SHEETS
04	SF	80	13.2/13.9	463R2	1204

REGISTERED ENGINEER - CIVIL

12-6-04
PLANS APPROVAL DATE

REGISTERED PROFESSIONAL ENGINEER John Sun No. C 54648 Exp. 12/31/05 CIVIL STATE OF CALIFORNIA

The State of California or its officers or agents shall not be responsible for the accuracy or completeness of electronic copies of this plan sheet.

T.Y. LIN / MOFFATT & NICHOL
825 BATTERY STREET
SAN FRANCISCO, CA 94111

Caltrans now has a web site! To get to the web site, go to: http://www.dot.ca.gov

REGISTERED PROFESSIONAL ENGINEER James P. Duxbury No. C 64677 Exp. 06/30/07 CIVIL STATE OF CALIFORNIA

FOR REVISIONS ONLY

MARK	DATE	DESCRIPTIONS	BY	CH'D	CCO#
2	01/31/07	CORROSION PROTECTION	JD	AS	16
1	07/21/06	W2 CAP BEAM ISD	JD	NV	23

REVISIONS

CONTRACT CHANGE ORDER NO. ____
SHEET ___ OF ___

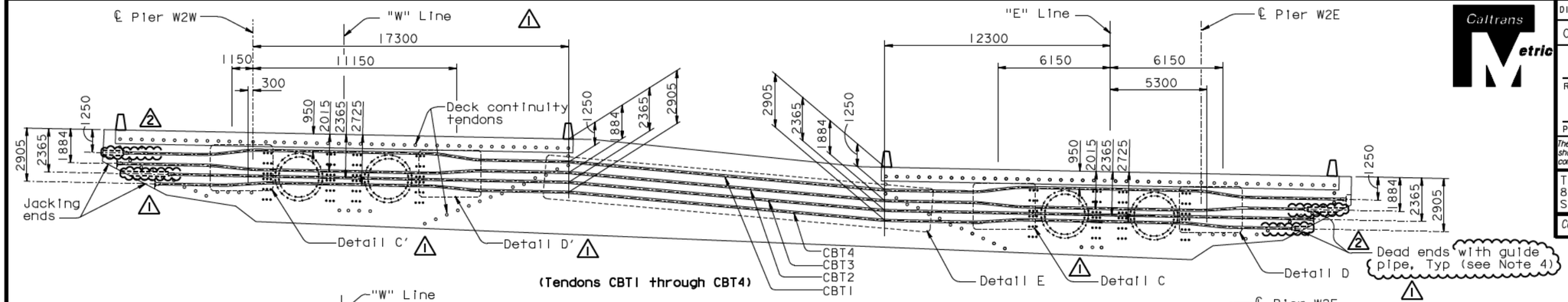

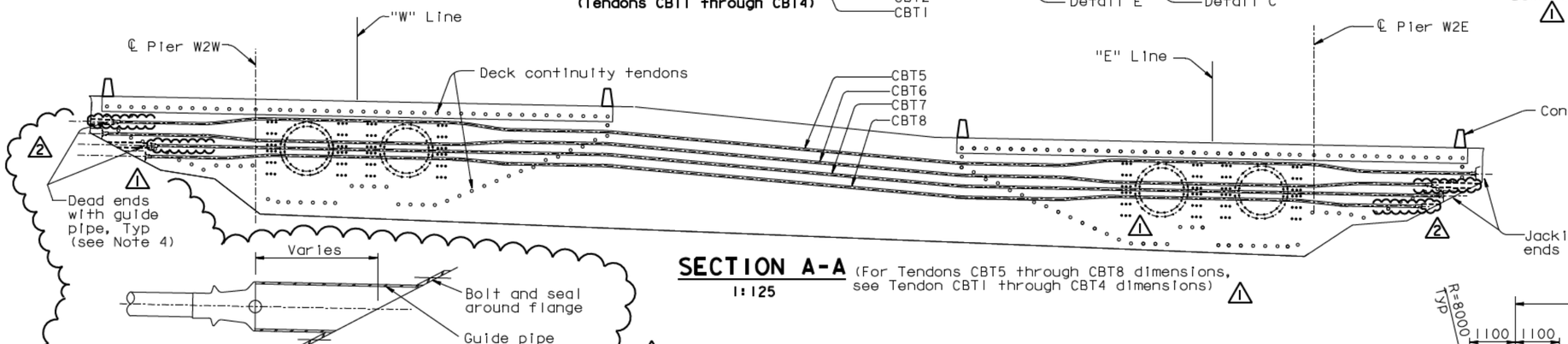

SECTION A-A (For Tendons CBT5 through CBT8 dimensions, see Tendon CBT1 through CBT4 dimensions)
1:125

DEAD END GUIDE PIPE
NTS (see Note 4)

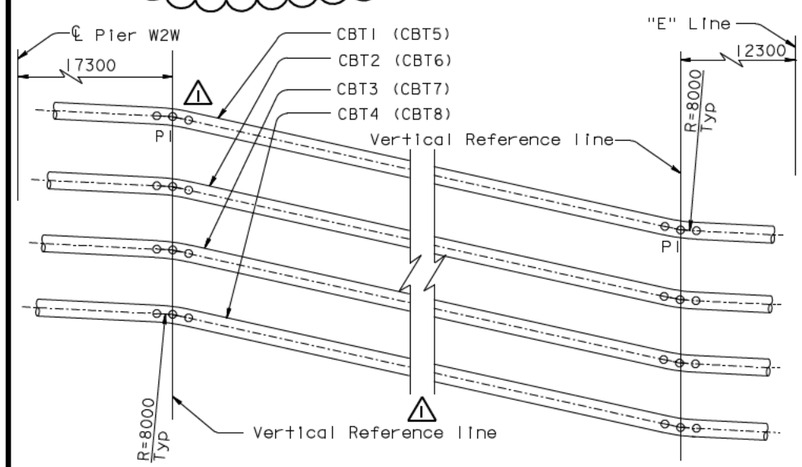

DETAIL E
NTS

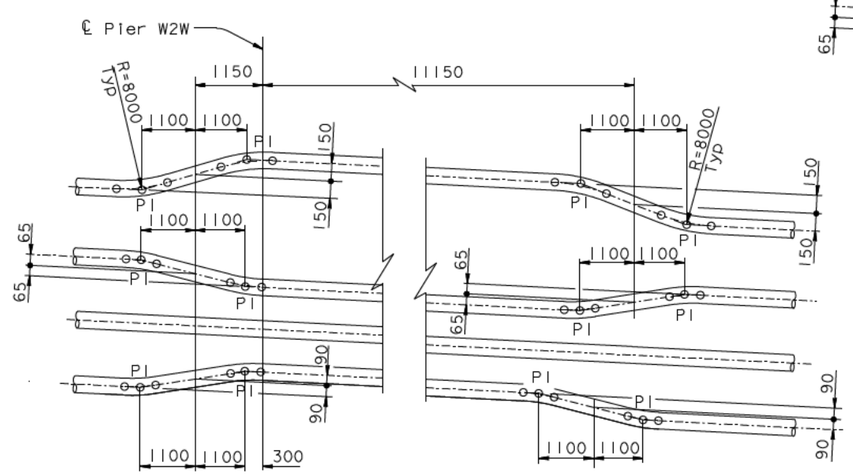

DETAIL C'
NTS

DETAIL D'
NTS

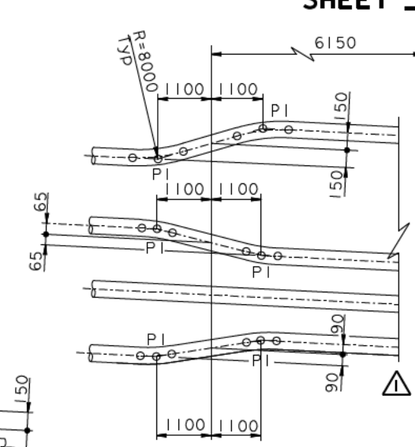

DETAIL C
NTS

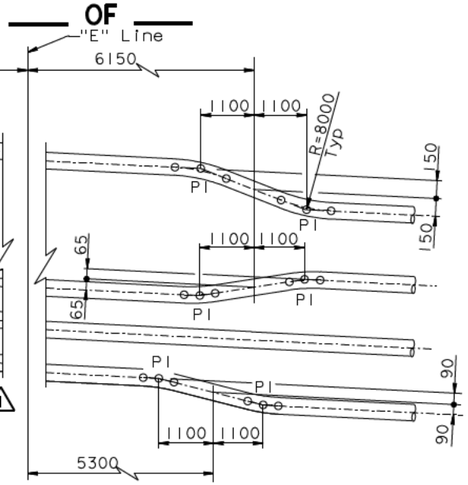

DETAIL D
NTS

NOTES:

1. For additional details, see "W2 Cap Beam Post-Tensioning Details No.1" sheet.
2. For PT blockout details, see "W2 Cap Beam Blockout Details" sheets.
3. For deck continuity tendon details, see "W2 Cap Beam Post-Tensioning Details No.5" through "W2 Cap Beam Post-Tensioning Details No.12" sheets.
4. Contractor shall coordinate the dead end guide pipe details with the PT System Supplier and shall submit them to the Engineer for review and approval. Contractor shall grout the guide pipe after stressing operations have been completed.

ALL DIMENSIONS ARE IN MILLIMETERS UNLESS OTHERWISE SHOWN

100 % PS&E

DATE PLOTTED => 15 MAR 2007 TIME PLOTTED => 15:24:30

USERNAME => visitor

R. Vallzadeh/V. Toan/Y.L./W.L./F.C.
DESIGN OVERSIGHT
SIGN OFF DATE 01/31/07

Rev. Date: 5-18-98

	BY	CHECKED
DESIGN	J. Sun	M. Chen
DETAILS	J. Duxbury	M. Chen
QUANTITIES	S. Shi	D. Harrison

ORIGINAL SCALE IN MILLIMETERS FOR REDUCED PLANS 0 10 20 30 40 50 60 70 80 90 100

PREPARED FOR THE STATE OF CALIFORNIA DEPARTMENT OF TRANSPORTATION

R. Manzanarez
PROJECT ENGINEER

CU 04
EA 0120F1

BRIDGE NO. 34-0006L/R
KILOMETER POST 13.2/13.9

DISREGARD PRINTS BEARING EARLIER REVISION DATES

REVISION DATES (PRELIMINARY STAGE ONLY): 08/08/99 05/31/01 04/08/02 07/01/02 12/19/02

SHEET 046R2 OF

SAN FRANCISCO OAKLAND BAY BRIDGE
EAST SPAN SEISMIC SAFETY PROJECT
SELF-ANCHORED SUSPENSION BRIDGE (SUPERSTRUCTURE & TOWER)

W2 CAP BEAM POST-TENSIONING DETAILS NO. 2

FILE => I:\bb\04-012001\sas\contract plans and cco\cco\in progress\cco#16\aecpt02.dgn

DIST.	COUNTY	ROUTE	KILOMETER POST TOTAL PROJECT	SHEET NO.	TOTAL SHEETS
04	SF	80	13.2/13.9	466R2	1204

REGISTERED ENGINEER - CIVIL

12-6-04
PLANS APPROVAL DATE

The State of California or its officers or agents shall not be responsible for the accuracy or completeness of electronic copies of this plan sheet.

REGISTERED PROFESSIONAL ENGINEER John Sun No. C 54648 Exp. 12/31/05 CIVIL STATE OF CALIFORNIA

T.Y. LIN / MOFFATT & NICHOL
825 BATTERY STREET
SAN FRANCISCO, CA 94111

Caltrans now has a web site! To get to the web site, go to: http://www.dot.ca.gov

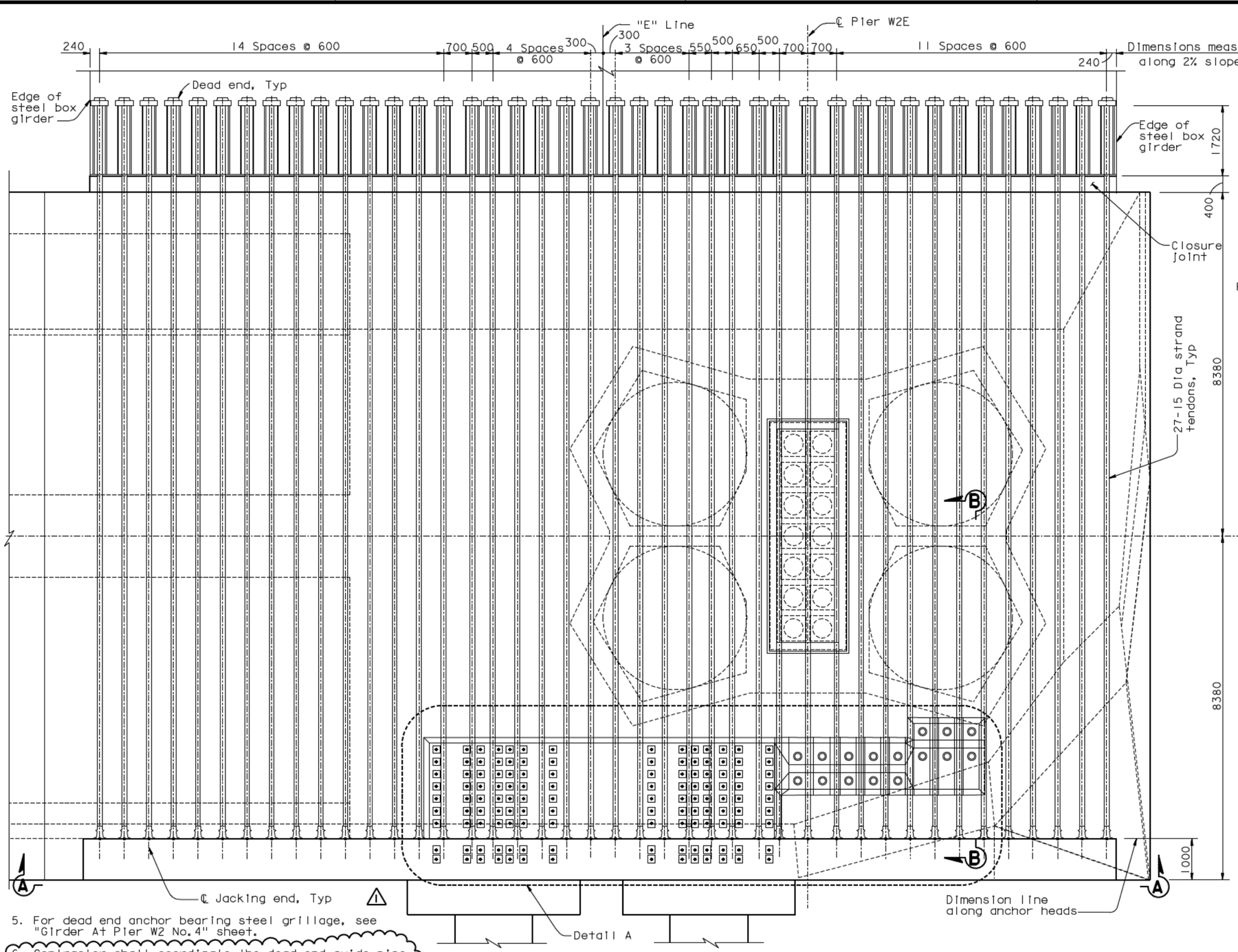

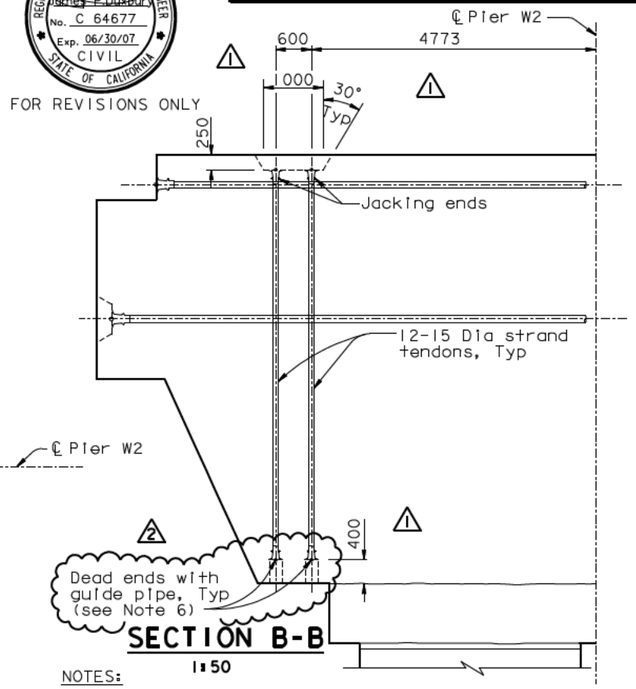

SECTION B-B
1:50

NOTES:

1. For Section A-A, see "W2 Cap Beam Post-Tensioning Details No.9" sheet.
2. For Detail A, see "W2 Cap Beam Post-Tensioning Details No.10" sheet.
3. All W2 cap beam continuity tendons are ASTM A416 Grade 270 (fu=1860 MPa), low relaxation, 27-15 Dia seven wire strand PT, unless specified otherwise. For additional prestressing details, see "Prestressing Notes" sheet.
4. For blockout details, see "W2 Cap Beam Blockout Details" sheets.

5. For dead end anchor bearing steel grillage, see "Girder At Pier W2 No.4" sheet.
6. Contractor shall coordinate the dead end guide pipe details with the PT System Supplier and shall submit them to the Engineer for review and approval. Contractor shall grout the guide pipe after stressing operations have been completed.

TOP TENDON LAYOUT PLAN ("E" Line)
1:50

MARK	DATE	DESCRIPTIONS	BY	CH'D	CCO#
2	01/31/07	CORROSION PROTECTION	JD	AS	16
1	07/21/06	W2 CAP BEAM ISD	JD	NV	23

REVISIONS

CONTRACT CHANGE ORDER NO. ____
SHEET ____ OF ____

ALL DIMENSIONS ARE IN MILLIMETERS UNLESS OTHERWISE SHOWN

SAN FRANCISCO OAKLAND BAY BRIDGE
EAST SPAN SEISMIC SAFETY PROJECT
SELF-ANCHORED SUSPENSION BRIDGE
(SUPERSTRUCTURE & TOWER)

W2 CAP BEAM POST-TENSIONING DETAILS NO.5

R. Valizadeh/V.Toan/Y.L./W.L./F.C.
DESIGN OVERSIGHT
SIGN OFF DATE 01/31/07

	BY	CHECKED
DESIGN	J. Sun	M. Chen
DETAILS	J. Duxbury	M. Chen
QUANTITIES	S. Shi	D. Harrison

PREPARED FOR THE STATE OF CALIFORNIA DEPARTMENT OF TRANSPORTATION

R. Manzanarez
PROJECT ENGINEER

BRIDGE NO. 34-0006L/R
KILOMETER POST 13.2/13.9

Rev. Date: 5-18-98

ORIGINAL SCALE IN MILLIMETERS FOR REDUCED PLANS 0 10 20 30 40 50 60 70 80 90 100

CU 04
EA 0120F1

DISREGARD PRINTS BEARING EARLIER REVISION DATES

REVISION DATES (PRELIMINARY STAGE ONLY) 08/02/99 05/31/01 04/08/02 07/01/02 12/19/02

SHEET 049R2 OF

FILE -> I:\bb\04-012001\sas\contract plans and cco\cco\in progress\cco#16\aecpt05.dgn

USERNAME => visitor DATE PLOTTED => 15 MAR 2007 TIME PLOTTED => 15:26:12

100 % PS&E

DIST.	COUNTY	ROUTE	KILOMETER POST TOTAL PROJECT	SHEET NO.	TOTAL SHEETS
04	SF	80	13.2/13.9	468R2	1204

REGISTERED ENGINEER - CIVIL

12-6-04
PLANS APPROVAL DATE

REGISTERED PROFESSIONAL ENGINEER John Sun No. C 54648 Exp. 12/31/05 CIVIL STATE OF CALIFORNIA

The State of California or its officers or agents shall not be responsible for the accuracy or completeness of electronic copies of this plan sheet.

T.Y. LIN / MOFFATT & NICHOL
825 BATTERY STREET
SAN FRANCISCO, CA 94111

Caltrans now has a web site! To get to the web site, go to: http://www.dot.ca.gov

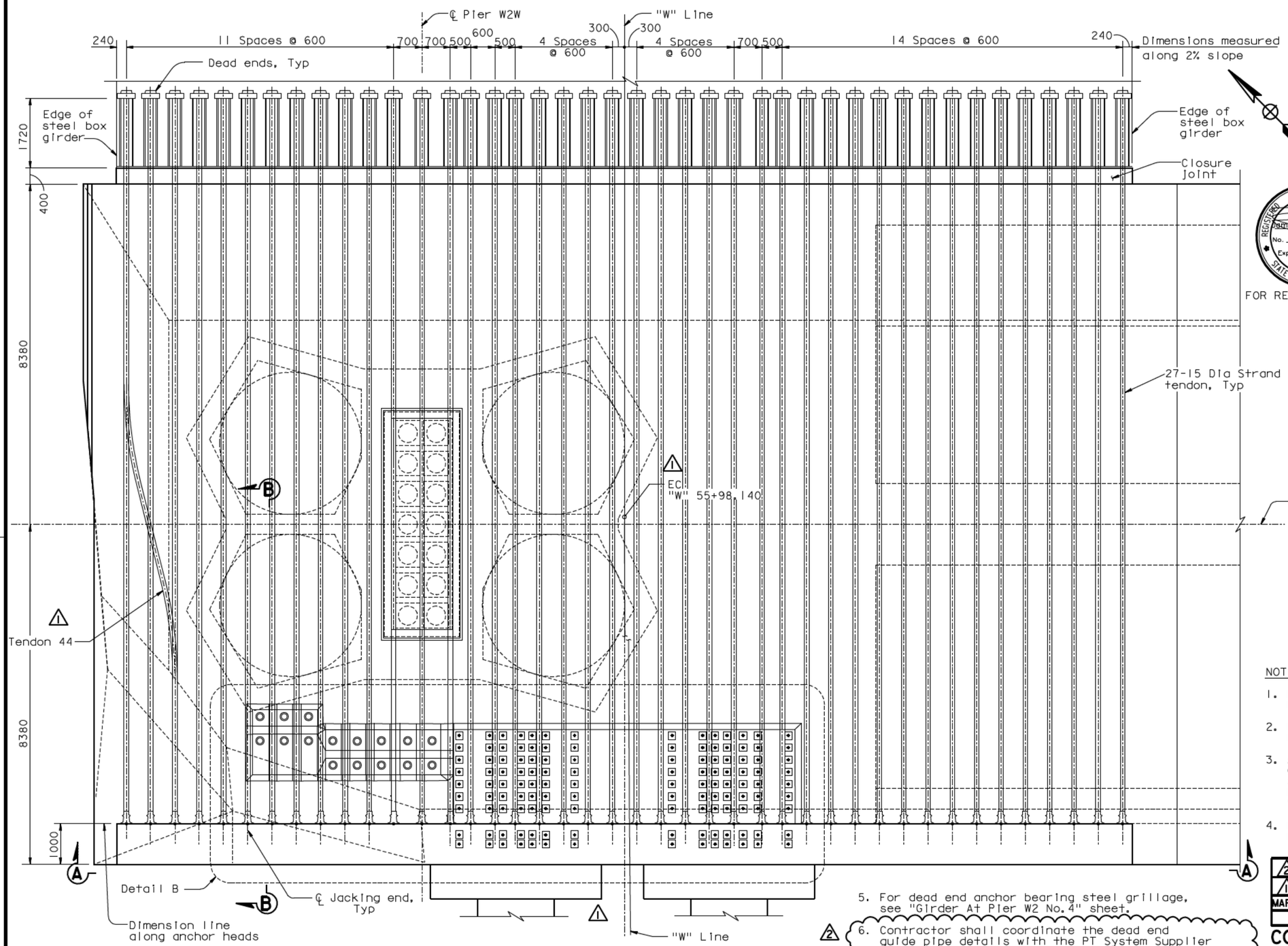

TOP TENDON LAYOUT PLAN ("W" Line)

1:50

ALL DIMENSIONS ARE IN MILLIMETERS UNLESS OTHERWISE SHOWN

REGISTERED PROFESSIONAL ENGINEER James P. Duxbury No. C 64677 Exp. 06/30/07 CIVIL STATE OF CALIFORNIA

FOR REVISIONS ONLY

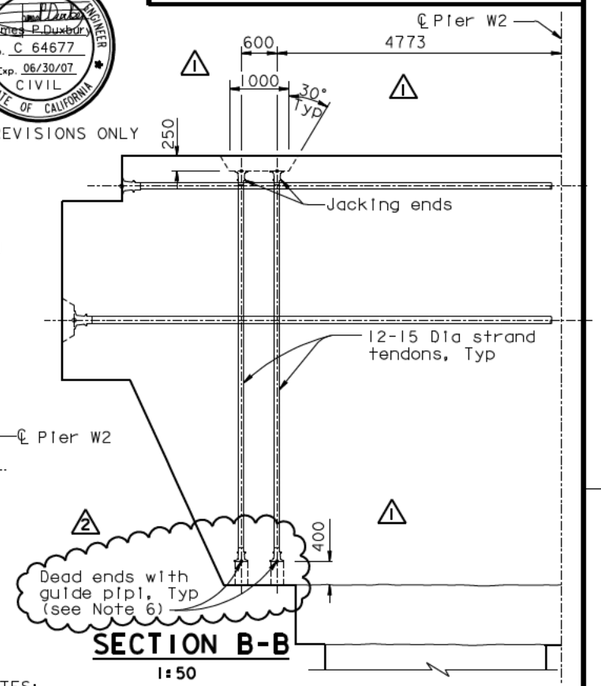

SECTION B-B

1:50

NOTES:

1. For Section A-A, see "W2 Cap Beam Post-Tensioning Details No. 9" sheet.
2. For Detail B, see "W2 Cap Beam Post-Tensioning Details No. 10" sheet.
3. All W2 cap beam continuity tendons are ASTM A416 Grade 270 (fu=1860 MPa), low relaxation, 27-15 Dia seven wire strand PT, unless specified otherwise. For additional prestressing details, see "Prestressing Notes" sheet.
4. For blockout details, see "W2 Cap Beam Blockout Details" sheets.
5. For dead end anchor bearing steel grillage, see "Girder At Pier W2 No. 4" sheet.
6. Contractor shall coordinate the dead end guide pipe details with the PT System Supplier and shall submit them to the Engineer for review and approval. Contractor shall grout the guide pipe after stressing operations have been completed.

MARK	DATE	DESCRIPTIONS	BY	CH'D	CCO#
2	01/31/07	CORROSION PROTECTION	JD	AS	16
1	07/21/06	W2 CAP BEAM ISD	JD	NV	23

REVISIONS

CONTRACT CHANGE ORDER NO. ____
SHEET ___ OF ___

100 % PS&E

SAN FRANCISCO OAKLAND BAY BRIDGE
EAST SPAN SEISMIC SAFETY PROJECT
SELF-ANCHORED SUSPENSION BRIDGE
(SUPERSTRUCTURE & TOWER)

W2 CAP BEAM POST-TENSIONING DETAILS NO. 7

R. Valizadeh/V. Toan/Y.L./W.L./F.C.
DESIGN OVERSIGHT
Roger Valizadeh / Vong Toan / Y. Lin
SIGN OFF DATE 01/31/07

	BY	CHECKED
DESIGN	J. Sun	M. Chen
DETAILS	J. Duxbury	M. Chen
QUANTITIES	S. Shi	D. Harrison

PREPARED FOR THE STATE OF CALIFORNIA DEPARTMENT OF TRANSPORTATION

R. Manzanarez
PROJECT ENGINEER

BRIDGE NO. 34-0006L/R
KILOMETER POST 13.2/13.9

Rev. Date: 5-18-98

ORIGINAL SCALE IN MILLIMETERS FOR REDUCED PLANS 0 10 20 30 40 50 60 70 80 90 100

CU 04
EA 0120F1

DISREGARD PRINTS BEARING EARLIER REVISION DATES

REVISION DATES (PRELIMINARY STAGE ONLY) 08/02/99 05/31/01 04/08/02 07/01/02 12/19/02

SHEET 051R2 OF

FILE -> I:\bb\04-012001\sas\contract plans and cco\cco\in progress\cco#16\aecpt07.dgn

USERNAME => visitor DATE PLOTTED => 15 MAR 2007 TIME PLOTTED => 15:27:40

DIST.	COUNTY	ROUTE	KILOMETER POST TOTAL PROJECT	SHEET NO.	TOTAL SHEETS
04	SF	80	13.2/13.9	470R2	1204

REGISTERED ENGINEER - CIVIL

12-6-04
PLANS APPROVAL DATE

REGISTERED PROFESSIONAL ENGINEER John Sun No. C 54648 Exp. 12/31/05 CIVIL STATE OF CALIFORNIA

The State of California or its officers or agents shall not be responsible for the accuracy or completeness of electronic copies of this plan sheet.

T.Y. LIN / MOFFATT & NICHOL
825 BATTERY STREET
SAN FRANCISCO, CA 94111

Caltrans now has a web site! To get to the web site, go to: http://www.dot.ca.gov

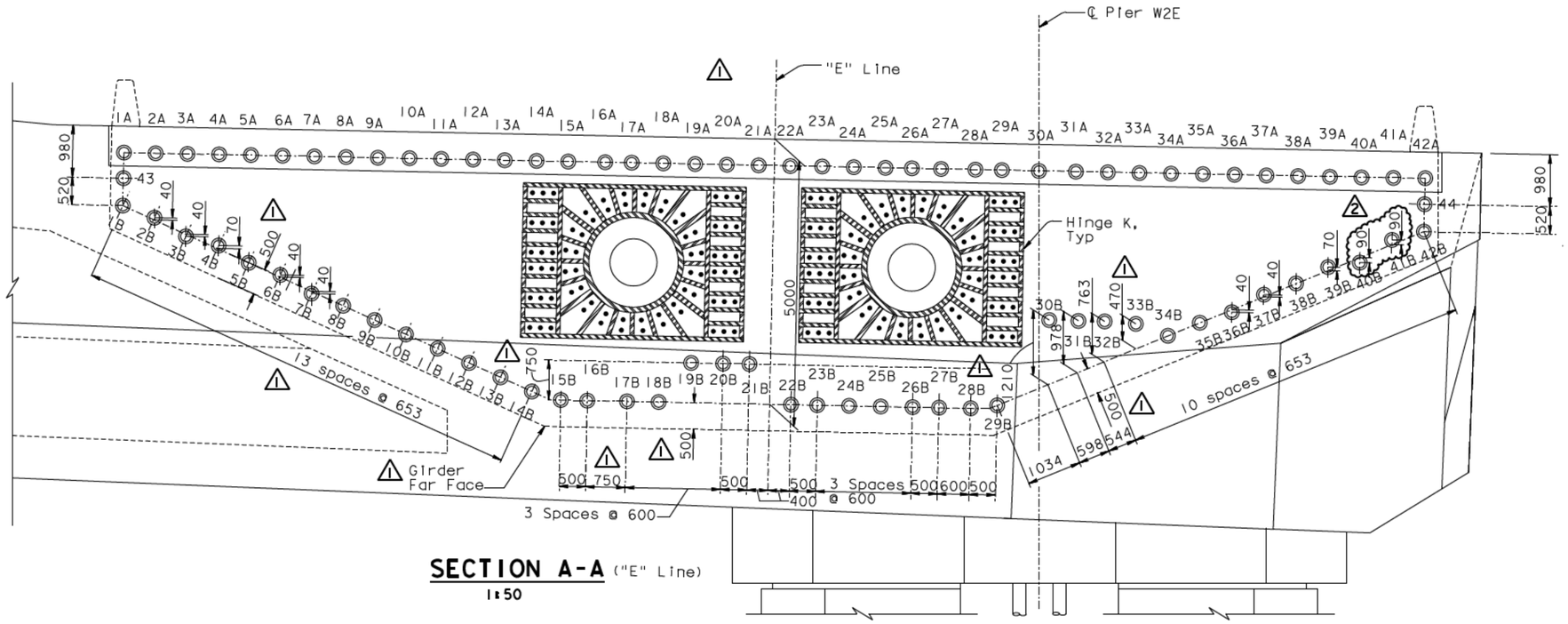

SECTION A-A ("E" Line)
1:50

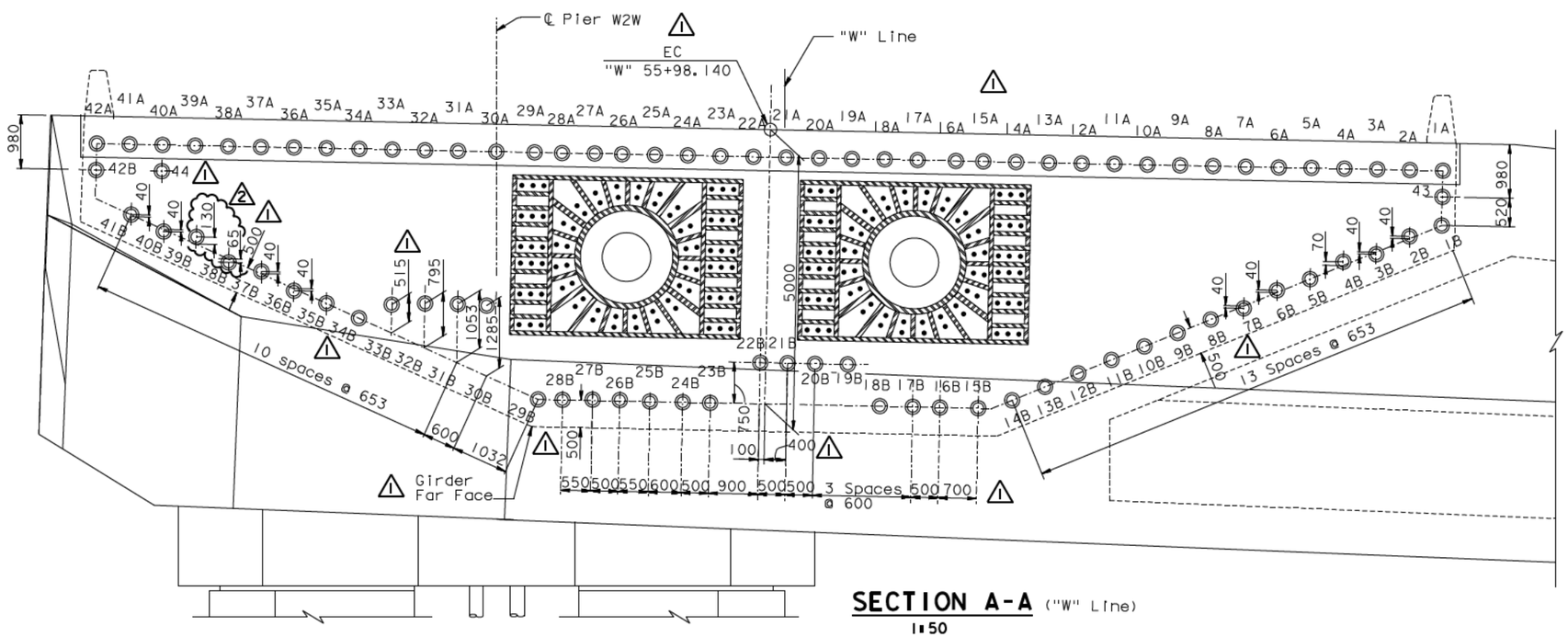

SECTION A-A ("W" Line)
1:50

NOTES:

1. For additional details, see "W2 Cap Beam Post-Tensioning Details No.5" and "W2 Cap Beam Post-Tensioning Details No.7" sheets.
2. Jacking force in the W2 cap beam continuity tendons (1A-42A, 1B-42B, 43 & 44) shall be 5265 kN typical.

REGISTERED PROFESSIONAL ENGINEER James P. Duxbury No. C 64677 Exp. 06/30/07 CIVIL STATE OF CALIFORNIA

FOR REVISIONS ONLY

MARK	DATE	DESCRIPTIONS	BY	CH'D	CCO#
2	01/31/07	CORROSION PROTECTION	JD	AS	16
1	07/21/06	W2 CAP BEAM ISD	JD	NV	23

REVISIONS

CONTRACT CHANGE ORDER NO. ____
SHEET ____ OF ____

ALL DIMENSIONS ARE IN MILLIMETERS UNLESS OTHERWISE SHOWN

SAN FRANCISCO OAKLAND BAY BRIDGE
EAST SPAN SEISMIC SAFETY PROJECT
SELF-ANCHORED SUSPENSION BRIDGE
(SUPERSTRUCTURE & TOWER)

W2 CAP BEAM POST-TENSIONING DETAILS NO. 9

R. Valizadeh/V. Toan/Y.L./W.L./F.C.
DESIGN OVERSIGHT
SIGN OFF DATE 01/31/07

	BY	CHECKED
DESIGN	J. Sun	M. Chen
DETAILS	J. Duxbury	M. Chen
QUANTITIES	S. Shi	D. Harrison

PREPARED FOR THE STATE OF CALIFORNIA DEPARTMENT OF TRANSPORTATION

R. Manzanarez
PROJECT ENGINEER

BRIDGE NO. 34-0006L/R
KILOMETER POST 13.2/13.9

Rev. Date: 5-18-98

ORIGINAL SCALE IN MILLIMETERS FOR REDUCED PLANS 0 10 20 30 40 50 60 70 80 90 100

CU 04
EA 0120F1

DISREGARD PRINTS BEARING EARLIER REVISION DATES

REVISION DATES (PRELIMINARY STAGE ONLY) 08/02/99 05/31/01 04/08/02 07/02/02 12/19/02

SHEET 053R2 OF

FILE -> I:\bb\04-012001\sas\contract plans and cco\cco\in progress\cco#16\aecpt09.dgn

USERNAME => visitor DATE PLOTTED => 15 MAR 2007 TIME PLOTTED => 15:29:05

100 % PS&E

DIST.	COUNTY	ROUTE	KILOMETER POST TOTAL PROJECT	SHEET NO.	TOTAL SHEETS
04	SF	80	13.2/13.9	473R2	1204

Caltrans Metric

REGISTERED ENGINEER - CIVIL

12-6-04
PLANS APPROVAL DATE

REGISTERED PROFESSIONAL ENGINEER John Sun No. C 54648 Exp. 12/31/05 CIVIL STATE OF CALIFORNIA

The State of California or its officers or agents shall not be responsible for the accuracy or completeness of electronic copies of this plan sheet.

T.Y. LIN / MOFFATT & NICHOL
825 BATTERY STREET
SAN FRANCISCO, CA 94111

To get to the web site, go to: http://www.dot.ca.gov

W2 CAP BEAM CONTINUITY TENDON TABLE-1 FOR "E" LINE

Tendon No.	Type	Tendon No.	Type
1A	1	24A	1
1B	2	24B	2
2A	1	25A	1
2B	5	25B	2
3A	1	26A	1
3B	5	26B	2
4A	1	27A	1
4B	5	27B	2
5A	1	28A	1
5B	2	28B	2
6A	1	29A	3
6B	5	29B	2
7A	1	30A	3
△1 7B	5	30B	5, 9
8A	1	31A	3
8B	2	31B	5
9A	1	32A	1
9B	2	32B	5
10A	1	33A	1
10B	2	33B	5
11A	1	34A	1
11B	2	34B	2
12A	1	35A	1
12B	2	35B	2
13A	1	36A	1
13B	2	36B	5
14A	1	37A	1
14B	2	37B	5
15A	1	38A	1
15B	8 △1	38B	2
16A	1	39A	1
16B	8 △1	39B	5
17A	1	40A	1
17B	2	40B	5
18A	1	41A	1
18B	10 △1	41B	5
19A	1	42A	1
19B	4	42B	2
20A	1	43	2
20B	4	44	2
21A	1		
21B	4		
22A	1		
22B	2		
23A	1		
23B	2		

W2 CAP BEAM CONTINUITY TENDON TABLE-1 FOR "W" LINE

Tendon No.	Type	Tendon No.	Type
1A	1	24A	1
1B	2	24B	2
2A	1	25A	1
2B	5	25B	2
3A	1	26A	1
△1 3B	5	26B	8
4A	1	27A	1
△1 4B	5	27B	8
5A	1	28A	1
5B	2	28B	2
6A	1	29A	3
6B	5	29B	2
7A	1	30A	3
△1 7B	5	30B	5, 9
8A	1	31A	3
8B	2	31B	5
9A	1	32A	1
9B	2	32B	5
10A	1	33A	1
10B	2	33B	5
11A	1	34A	1
11B	2	34B	2
12A	1	35A	1
12B	2	35B	2
13A	1	36A	1
13B	2	36B	5
14A	1	37A	1
14B	2	37B	5
15A	1	38A	1
15B	2	38B	5 △2
16A	1	39A	1
16B	2	39B	5
17A	1	40A	1
17B	2	40B	5
18A	1	41A	1
18B	2	41B	5
19A	1	42A	1
19B	4	42B	6 △1
20A	1	43	2
20B	4	44	7 △1
21A	1		
21B	4, 8 △1		
22A	1		
22B	4, 8 △1		
23A	1		
23B	2		

W2 CAP BEAM CONTINUITY TENDON TABLE-2 FOR "E" LINE

Tendon No.	h	L	e_5	R
2B	-40	2200	500	8000
3B	+40	2200	500	8000
4B	-70	2200	500	8000
6B	-40	2200	500	8000
7B	+40	2200	500	8000
△1 30B	-1210	2400	1200	4000
31B	-978	2400	1200	5000
32B	-763	2400	1200	4000
△1 33B	-470	2400	1200	8000
36B	+40	2200	500	8000
37B	-40	2200	500	8000
39B	-70	2200	500	8000
40B	△2 +90	2200	500	8000
41B	-90	2200	500	8000

△1

Tendon No.	p
15B	-50
16B	-50
30B	+200

W2 CAP BEAM CONTINUITY TENDON TABLE-2 FOR "W" LINE

Tendon No.	h	L	e_5	R
2B	-40	2200	500	8000
3B	+40	2200	500	8000
4B	-70	2200	500	8000
6B	-40	2200	500	8000
7B	+40	2200	500	8000
△1 30B	-1285	-1285	1200	4000
31B	-1053	2400	1200	5000
32B	-795	2400	1200	5000
△1 33B	-515	2400	1200	8000
36B	+40	2200	500	8000
37B	-40	2200	500	8000
38B	+65	2200	500	8000 △2
△2 39B	-130	2200	500	8000
40B	+40	2200	500	8000
41B	-40	2200	500	8000

△1

Tendon No.	p
21B	+100
22B	+100
26B	-50
27B	-50
30B	-200
44	+1200

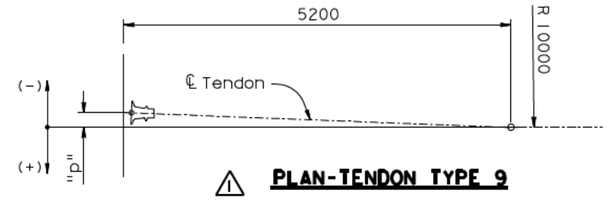

△1 **PLAN-TENDON TYPE 9**

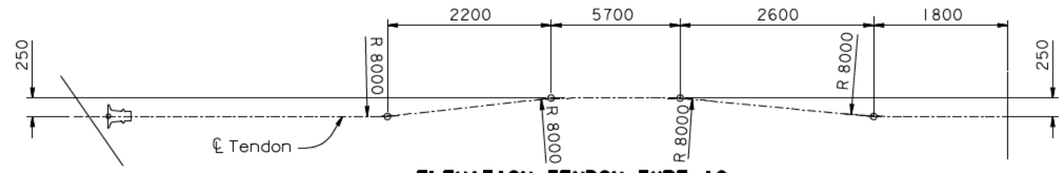

△1 **ELEVATION-TENDON TYPE 10**

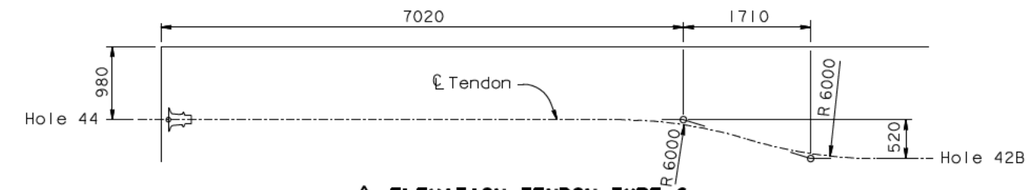

△1 **ELEVATION-TENDON TYPE 6**

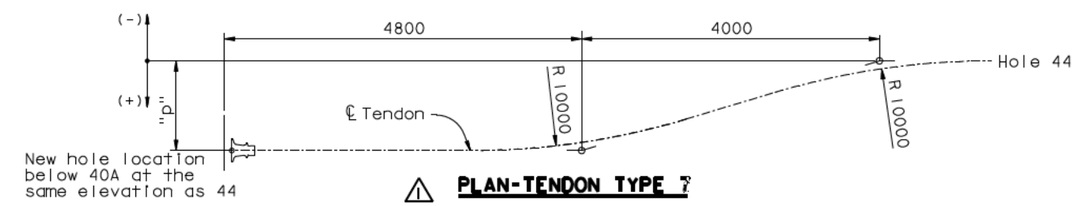

△1 **PLAN-TENDON TYPE 7**

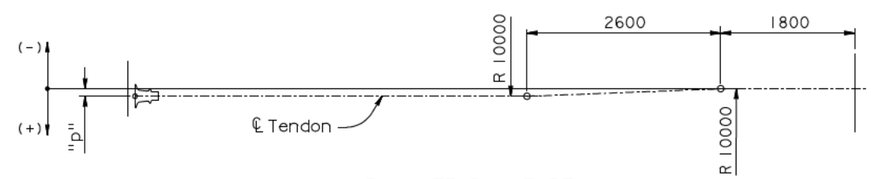

△1 **PLAN-TENDON TYPE 8**

REGISTERED PROFESSIONAL ENGINEER Charles P. Duxbury No. C 64677 Exp. 06/30/07 CIVIL STATE OF CALIFORNIA

FOR REVISIONS ONLY

NOTES:

1. For Type 1 through Type 5 tendon geometry, see "W2 Cap Beam Post-Tensioning Details No. 11" sheet.
2. For general stressing sequence, see "Pier W2 Construction Sequence" sheet.
3. For additional prestressing details, see "Prestressing Notes" sheet.

ALL DIMENSIONS ARE IN MILLIMETERS UNLESS OTHERWISE SHOWN

MARK	DATE	DESCRIPTIONS	BY	CH'D	CCO#
△2	01/31/07	CORROSION PROTECTION	JD	AS	16
△1	07/21/06	W2 CAP BEAM ISD	JD	NV	23

REVISIONS

CONTRACT CHANGE ORDER NO. ____
SHEET ___ OF ___

SAN FRANCISCO OAKLAND BAY BRIDGE
EAST SPAN SEISMIC SAFETY PROJECT
SELF-ANCHORED SUSPENSION BRIDGE
(SUPERSTRUCTURE & TOWER)

W2 CAP BEAM POST-TENSIONING DETAILS NO. 12

R. Valizadeh/V. Toan/Y.L./W.L./F.C.
DESIGN OVERSIGHT
SIGN OFF DATE 01/31/07

	BY	CHECKED
DESIGN	J. Sun	M. Chen
DETAILS	J. Duxbury	M. Chen
QUANTITIES	S. Shi	D. Harrison

PREPARED FOR THE STATE OF CALIFORNIA DEPARTMENT OF TRANSPORTATION

R. Manzanarez
PROJECT ENGINEER

BRIDGE NO. 34-0006L/R
KILOMETER POST 13.2/13.9

CU 04
EA 0120F1

Rev. Date: 5-18-98

ORIGINAL SCALE IN MILLIMETERS FOR REDUCED PLANS 0 10 20 30 40 50 60 70 80 90 100

DISREGARD PRINTS BEARING EARLIER REVISION DATES → 05/31/01 04/26/02 07/24/02 12/19/02

SHEET 056R2 OF

FILE -> I:\bb\04-012001\sas\contract plans and cco\cco\in progress\cco#16\aecpt12.dgn

100 % PS&E

DATE PLOTTED => 15 MAR 2007 TIME PLOTTED => 15:30:33

USERNAME => visitor

DIST.	COUNTY	ROUTE	KILOMETER POST TOTAL PROJECT	SHEET NO.	TOTAL SHEETS
04	SF	80	13.2/13.9	499R2	1204

REGISTERED ENGINEER - CIVIL

12-6-04
PLANS APPROVAL DATE

REGISTERED PROFESSIONAL ENGINEER John Sun No. C 54648 Exp. 12/31/05 CIVIL STATE OF CALIFORNIA

The State of California or its officers or agents shall not be responsible for the accuracy or completeness of electronic copies of this plan sheet.

T.Y. LIN / MOFFATT & NICHOL
825 BATTERY STREET
SAN FRANCISCO, CA 94111

Caltrans now has a web site! To get to the web site, go to: http://www.dot.ca.gov

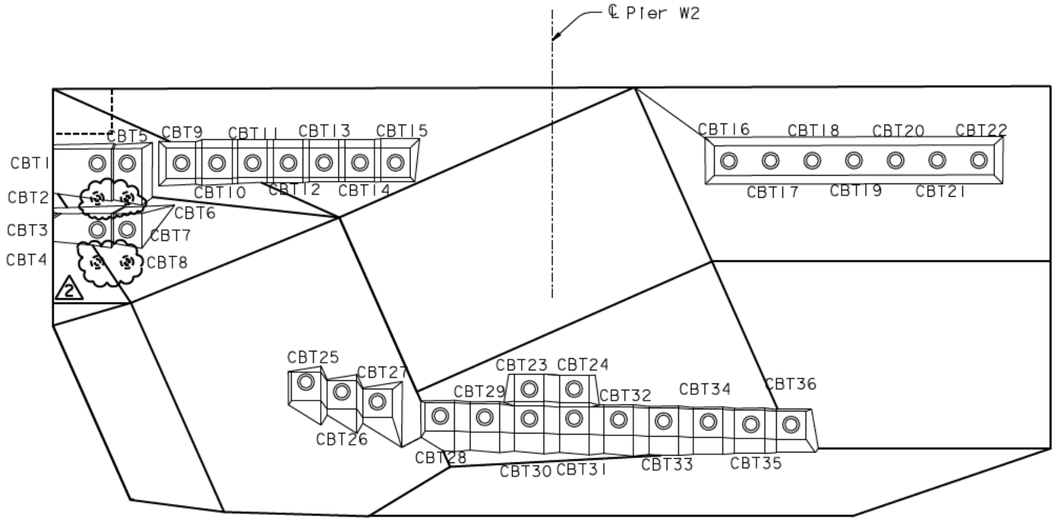

⚠1 **ELEVATION** (Cap beam transverse PT tendons)
1:50

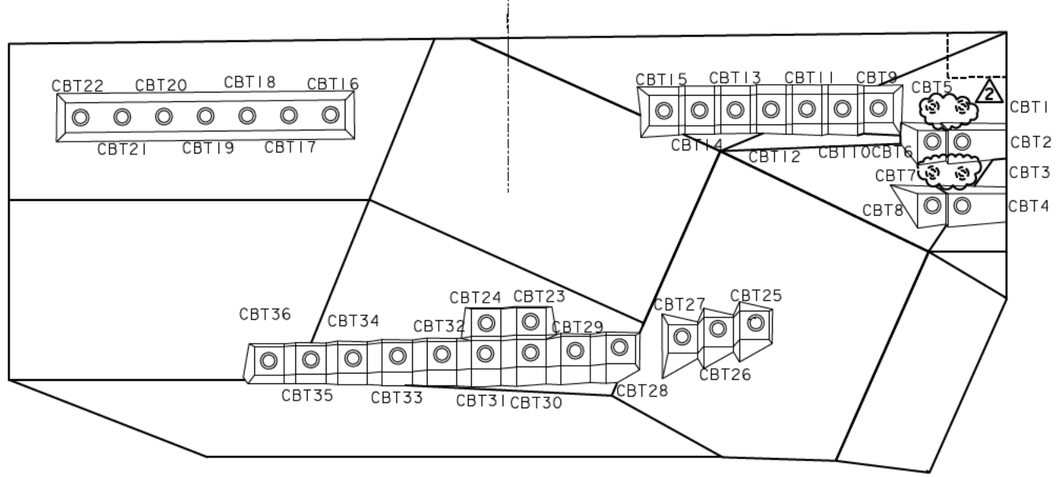

⚠1 **ELEVATION** (Cap beam transverse PT tendons)
1:50

CAP BEAM TRANSVERSE PT TENDON BLOCKOUT TABLE

South face		North face	
Tendon	Blockout Detail	Tendon	Blockout Detail
CBT1	R	CBT1	S
CBT2	R	CBT2	S
CBT3	R	CBT3	S
CBT4	R	CBT4	S
CBT5	R	CBT5	S
CBT6	R	CBT6	S
CBT7	R	CBT7	S
CBT8	R	CBT8	S
CBT9	J	CBT9	J
CBT10	J	CBT10	J
CBT11	K	CBT11	K
CBT12	K	CBT12	K
CBT13	K	CBT13	K
CBT14	K	CBT14	K
CBT15	K	CBT15	K
CBT16	L	CBT16	L
CBT17	L	CBT17	L
CBT18	L	CBT18	L
CBT19	L	CBT19	L
CBT20	L	CBT20	L
CBT21	L	CBT21	L
CBT22	L	CBT22	L
CBT23	P	CBT23	P
CBT24	P	CBT24	P
CBT25	M	CBT25	M
CBT26	M	CBT26	M
CBT27	M	CBT27	M
CBT28	N	CBT28	N
CBT29	N	CBT29	N
CBT30	P	CBT30	P
CBT31	P	CBT31	P
CBT32	N	CBT32	N
CBT33	N	CBT33	N
CBT34	N	CBT34	N
CBT35	N	CBT35	N
CBT36	Q	CBT36	Q

REGISTERED PROFESSIONAL ENGINEER James P. Duxbury No. C 64677 Exp. 06/30/07 CIVIL STATE OF CALIFORNIA

FOR REVISIONS ONLY

MARK	DATE	DESCRIPTIONS	BY	CH'D	CCO#
2	01/31/07	CORROSION PROTECTION	JD	AS	16
1	07/21/06	W2 CAP BEAM ISD	JD	NV	23

REVISIONS

CONTRACT CHANGE ORDER NO. ____
SHEET ___ OF ___

NOTES:

1. For Details J through L, see "W2 Cap Beam Blockout Details No.6" sheet.
2. For Details M and N, see "W2 Cap Beam Blockout Details No.7" sheet.
3. For Details P and Q, see "W2 Cap Beam Blockout Details No.8" sheet.
4. For Detail R, see "W2 Cap Beam Blockout Details No.9" sheet.
5. For Detail S, see "W2 Cap Beam Blockout Details No.10" sheet.
6. For additional prestressing details, see "Prestressing Notes" sheet.

100 % PS&E

DATE PLOTTED => 15 MAR 2007 TIME PLOTTED => 15:32:24

USERNAME => vistor

ALL DIMENSIONS ARE IN MILLIMETERS UNLESS OTHERWISE SHOWN

R. Vaizadeh/V. Toan/Y.L./W.L./F.C.
DESIGN OVERSIGHT
SIGN OFF DATE 01/31/07

Rev. Date: 5-18-98

DESIGN	BY J. Sun	CHECKED M. Chen	
DETAILS	BY J. Duxbury	CHECKED M. Chen	
QUANTITIES	BY S. Shi	CHECKED D. Harrison	

PREPARED FOR THE STATE OF CALIFORNIA DEPARTMENT OF TRANSPORTATION

R. Manzanarez
PROJECT ENGINEER

BRIDGE NO. 34-0006L/R
KILOMETER POST 13.2/13.9

SAN FRANCISCO OAKLAND BAY BRIDGE
EAST SPAN SEISMIC SAFETY PROJECT
SELF-ANCHORED SUSPENSION BRIDGE
(SUPERSTRUCTURE & TOWER)

W2 CAP BEAM BLOCKOUT DETAILS NO. 2

ORIGINAL SCALE IN MILLIMETERS FOR REDUCED PLANS 0 10 20 30 40 50 60 70 80 90 100

CU 04
EA 0120F1

DISREGARD PRINTS BEARING EARLIER REVISION DATES

REVISION DATES (PRELIMINARY STAGE ONLY) 08/02/99 05/31/01 04/08/02 07/08/02 12/19/02

SHEET 82R2 OF

FILE -> I:\bb\04-012001\sas\contract plans and cco\cco\In progress\cco#16\aecbb02.dgn

DIST.	COUNTY	ROUTE	KILOMETER POST TOTAL PROJECT	SHEET NO.	TOTAL SHEETS
04	SF	80	13.2/13.9	506R2	1204

Caltrans Metric

REGISTERED ENGINEER - CIVIL

12-6-04
PLANS APPROVAL DATE

REGISTERED PROFESSIONAL ENGINEER
John Sun
No. C 54648
Exp. 12/31/05
CIVIL
STATE OF CALIFORNIA

The State of California or its officers or agents shall not be responsible for the accuracy or completeness of electronic copies of this plan sheet.

T.Y. LIN / MOFFATT & NICHOL
825 BATTERY STREET
SAN FRANCISCO, CA 94111

Caltrans now has a web site! To get to the web site, go to: http://www.dot.ca.gov

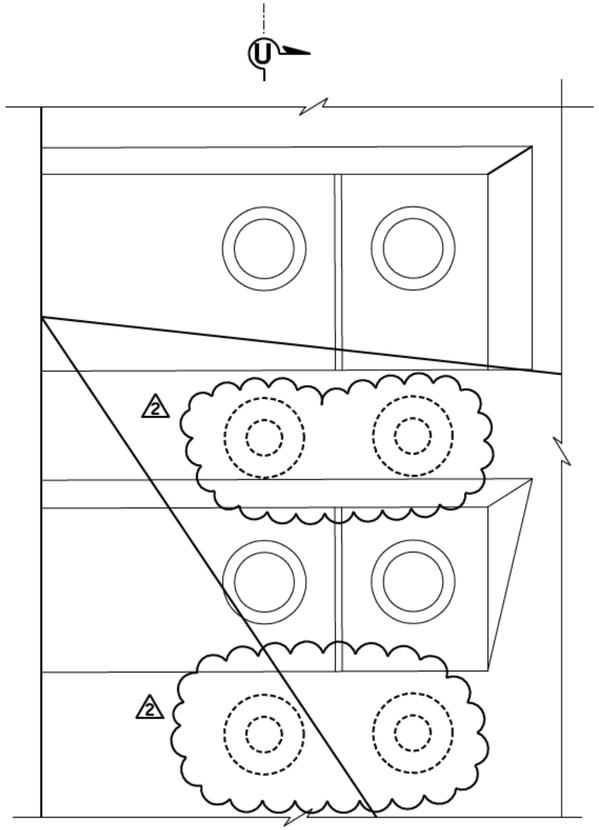

1 DETAIL R
1:10

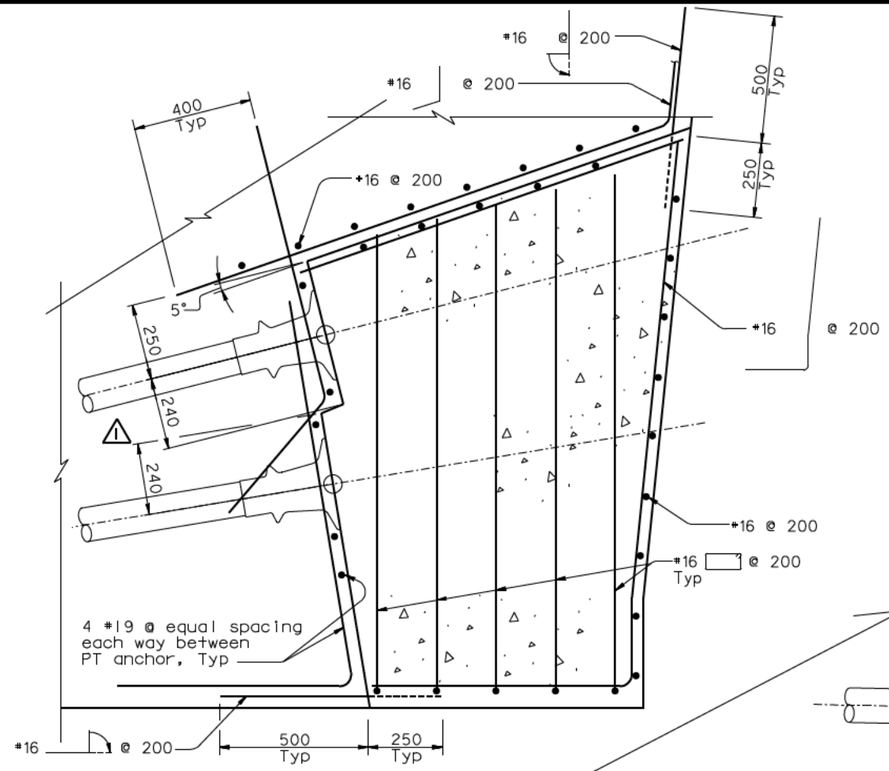

SECTION V-V
1:10

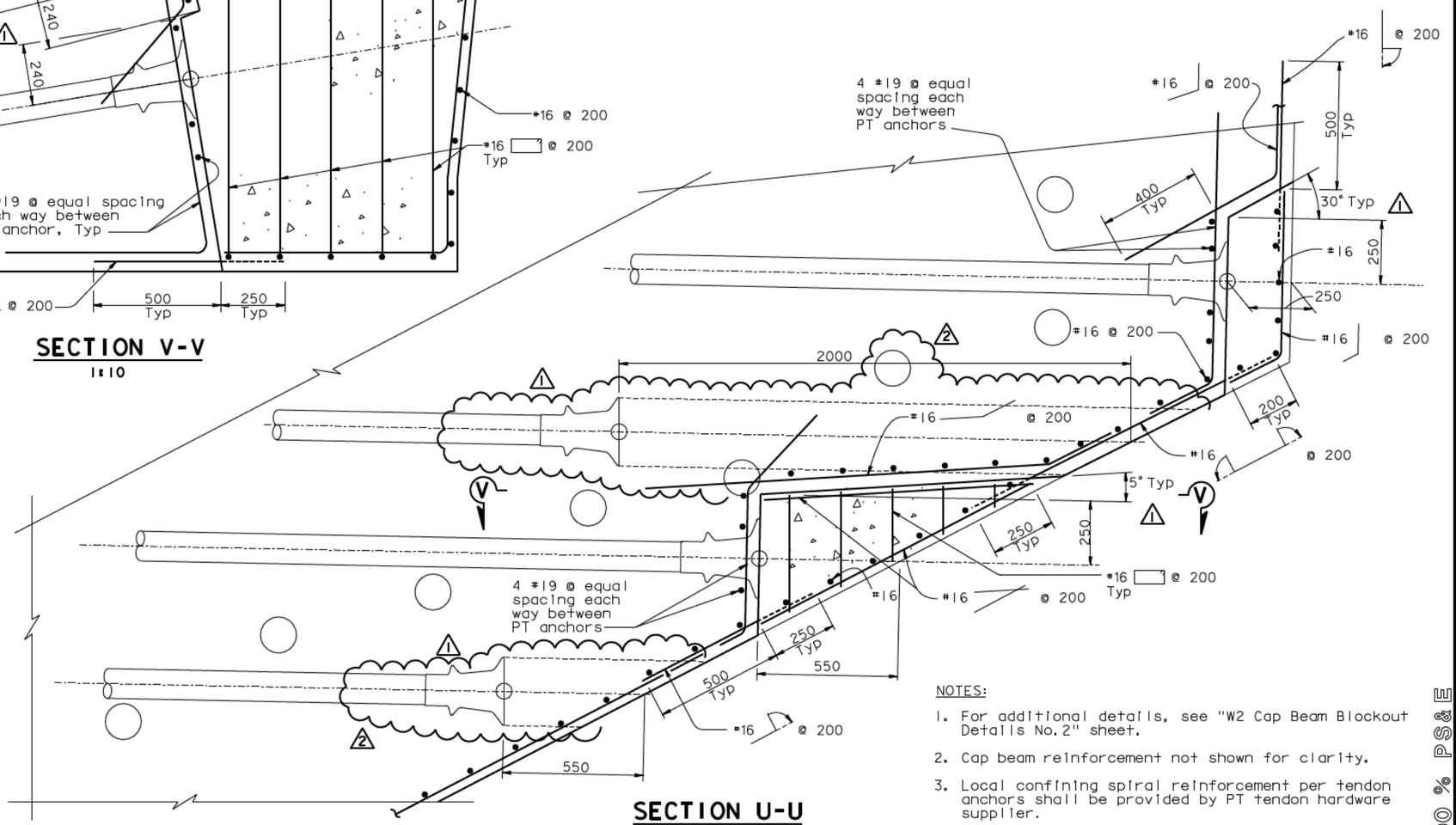

SECTION U-U
1:10

NOTES:

1. For additional details, see "W2 Cap Beam Blockout Details No. 2" sheet.
2. Cap beam reinforcement not shown for clarity.
3. Local confining spiral reinforcement per tendon anchors shall be provided by PT tendon hardware supplier.

REGISTERED PROFESSIONAL ENGINEER
James P. Duxbury
No. C 64677
Exp. 06/30/07
CIVIL
STATE OF CALIFORNIA

FOR REVISIONS ONLY

MARK	DATE	DESCRIPTIONS	BY	CH'D	CCO#
2	01/31/07	CORROSION PROTECTION	JD	NV	16
1	07/21/06	W2 CAP BEAM ISD	JD	NV	23

REVISIONS

CONTRACT CHANGE ORDER NO. _____
SHEET ____ OF ____

ALL DIMENSIONS ARE IN MILLIMETERS UNLESS OTHERWISE SHOWN

SAN FRANCISCO OAKLAND BAY BRIDGE
EAST SPAN SEISMIC SAFETY PROJECT
SELF-ANCHORED SUSPENSION BRIDGE
(SUPERSTRUCTURE & TOWER)

W2 CAP BEAM BLOCKOUT DETAILS NO. 9

R. Valizadeh/V. Toan/Y.L./W.L./F.C.
DESIGN OVERSIGHT
Roger Valizadeh / Vong Toan / Y Liu
SIGN OFF DATE 01/31/07

	BY	CHECKED
DESIGN	J. Sun	M. Chen
DETAILS	J. Duxbury	M. Chen
QUANTITIES	S. Shi	D. Harrison

PREPARED FOR THE
STATE OF CALIFORNIA
DEPARTMENT OF TRANSPORTATION

R. Manzanarez
PROJECT ENGINEER

BRIDGE NO. 34-0006L/R
KILOMETER POST 13.2/13.9

Rev. Date: 5-18-98

ORIGINAL SCALE IN MILLIMETERS FOR REDUCED PLANS 0 10 20 30 40 50 60 70 80 90 100

CU 04
EA 0120F1

DISREGARD PRINTS BEARING EARLIER REVISION DATES

REVISION DATES (PRELIMINARY STAGE ONLY) 05/31/01 04/08/02 07/01/02 12/19/02

SHEET 89R2 OF

FILE -> I:\bb\04-012001\sas\contract plans and cco\cco\in progress\cco#16\aecbb09.dgn

100 % PS&E

DATE PLOTTED => 15 MAR 2007 TIME PLOTTED => 15:33:45

USERNAME => visitor

DIST.	COUNTY	ROUTE	KILOMETER POST TOTAL PROJECT	SHEET NO.	TOTAL SHEETS
04	SF	80	13.2/13.9	507R2	1204

Caltrans Metric

REGISTERED ENGINEER - CIVIL

12-6-04
PLANS APPROVAL DATE

REGISTERED PROFESSIONAL ENGINEER John Sun No. C 54648 Exp. 12/31/05 CIVIL STATE OF CALIFORNIA

The State of California or its officers or agents shall not be responsible for the accuracy or completeness of electronic copies of this plan sheet.

T.Y. LIN / MOFFATT & NICHOL
825 BATTERY STREET
SAN FRANCISCO, CA 94111

Caltrans now has a web site! To get to the web site, go to: http://www.dot.ca.gov

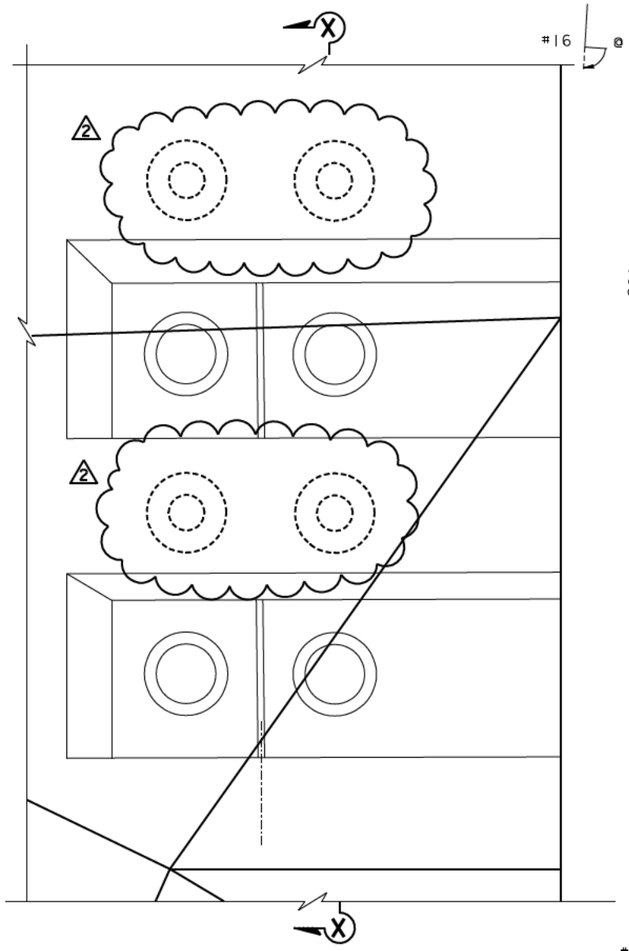

⚠1 DETAIL S
1:10

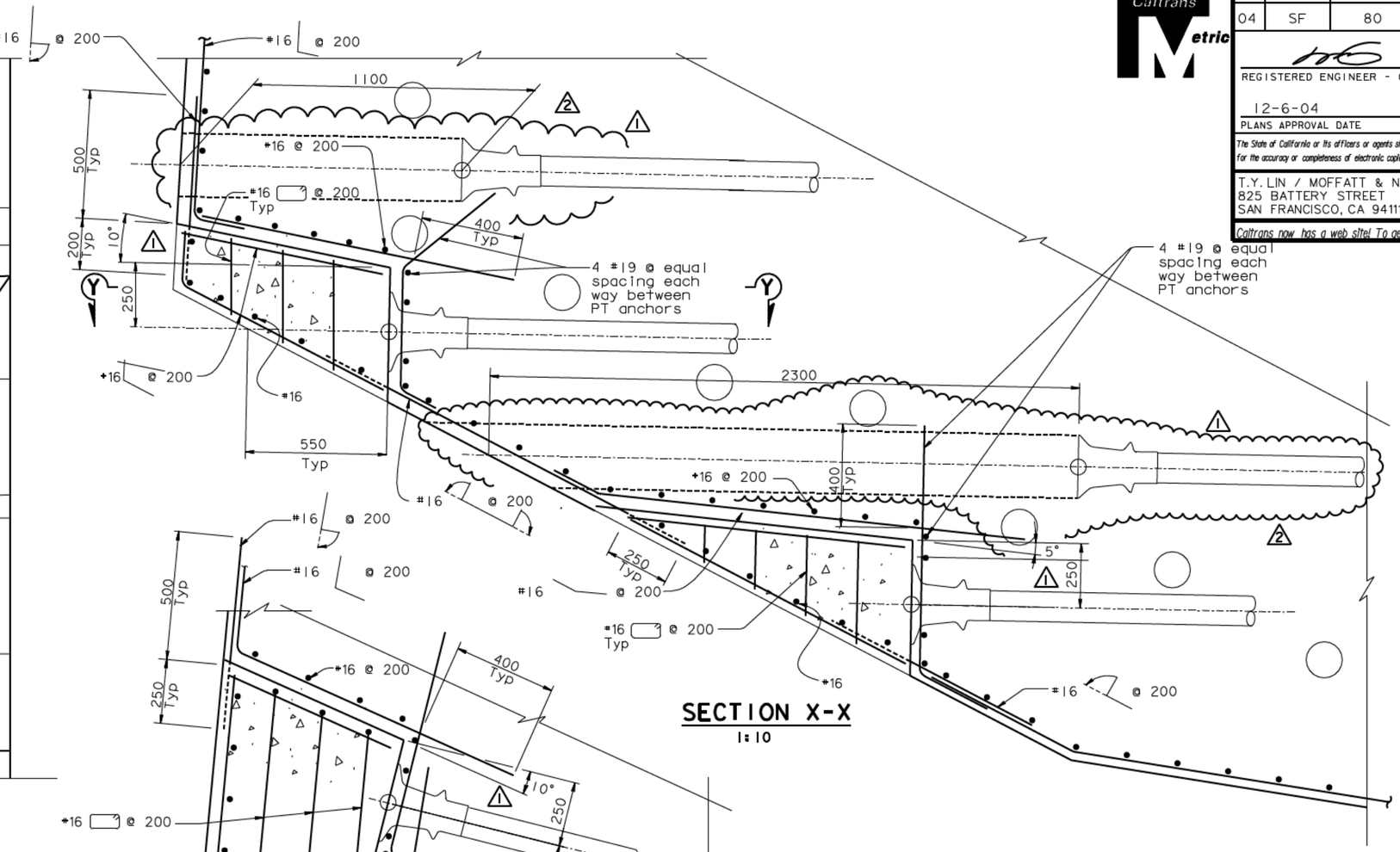

SECTION X-X
1:10

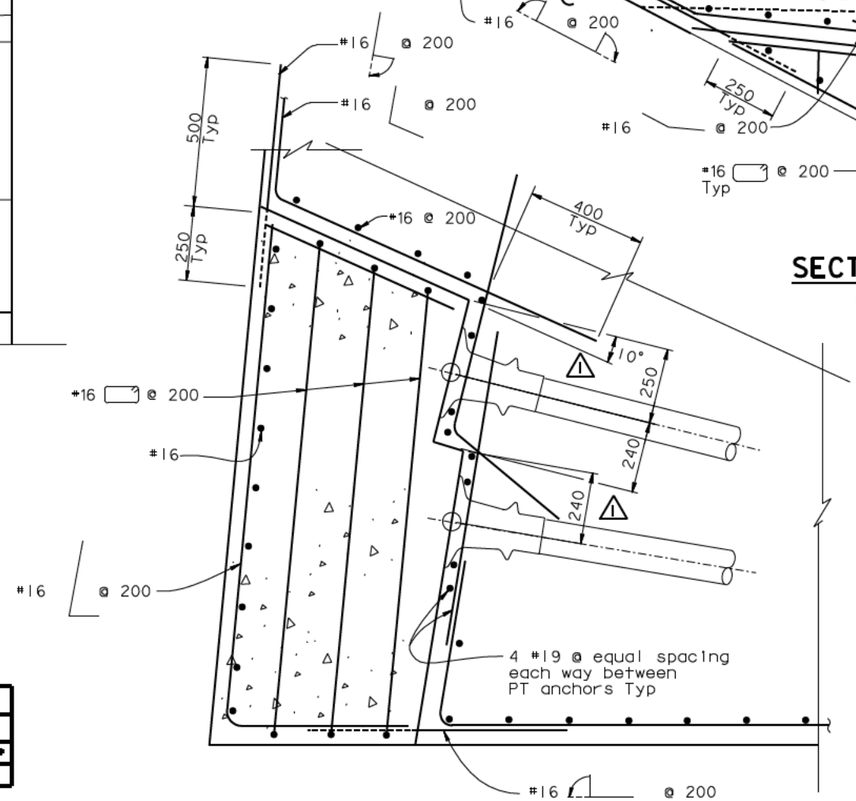

SECTION Y-Y
1:10

NOTES:

1. For additional details, see "W2 Cap Beam Blockout Details No.2" sheet.
2. Cap beam reinforcement not shown for clarity.
3. Local confining spiral reinforcement per tendon anchors shall be provided by PT tendon hardware supplier.

REGISTERED PROFESSIONAL ENGINEER John P. Duxbury No. C 64677 Exp. 06/30/07 CIVIL STATE OF CALIFORNIA

FOR REVISIONS ONLY

MARK	DATE	DESCRIPTIONS	BY	CH'D	CCO#
2	01/31/07	CORROSION PROTECTION	JD	AS	16
1	07/21/06	W2 CAP BEAM ISD	JD	NV	23

REVISIONS

CONTRACT CHANGE ORDER NO. ____
SHEET ___ OF ___

ALL DIMENSIONS ARE IN MILLIMETERS UNLESS OTHERWISE SHOWN

R. Valizadeh/V. Toan/Y.L./W.L./F.C.
DESIGN OVERSIGHT
SIGN OFF DATE 01/31/07

	BY	CHECKED
DESIGN	J. Sun	M. Chen
DETAILS	J. Duxbury	M. Chen
QUANTITIES	S. Shi	D. Harrison

PREPARED FOR THE STATE OF CALIFORNIA DEPARTMENT OF TRANSPORTATION

R. Manzanarez
PROJECT ENGINEER

BRIDGE NO. 34-0006L/R
KILOMETER POST 13.2/13.9

SAN FRANCISCO OAKLAND BAY BRIDGE
EAST SPAN SEISMIC SAFETY PROJECT
SELF-ANCHORED SUSPENSION BRIDGE
(SUPERSTRUCTURE & TOWER)

W2 CAP BEAM BLOCKOUT DETAILS NO. 10

Rev. Date: 5-18-98

ORIGINAL SCALE IN MILLIMETERS FOR REDUCED PLANS 0 10 20 30 40 50 60 70 80 90 100

CU 04
EA 0120F1

DISREGARD PRINTS BEARING EARLIER REVISION DATES

REVISION DATES (PRELIMINARY STAGE ONLY) 05/24/01 04/08/02 07/09/02 12/19/02

SHEET 90R2 OF

FILE -> I:\bb\04-012001\sas\contract plans and cco\cco\in progress\cco#16\aecbb10.dgn

100 % PS&E

DATE PLOTTED => 15 MAR 2007 TIME PLOTTED => 15:34:45

USERNAME => visitor

DIST.	COUNTY	ROUTE	KILOMETER POST TOTAL PROJECT	SHEET NO.	TOTAL SHEETS
04	SF	80	13.2/13.9	508R2	1204

Caltrans Metric

REGISTERED ENGINEER - CIVIL

12-6-04
PLANS APPROVAL DATE

REGISTERED PROFESSIONAL ENGINEER John Sun No. C 54648 Exp. 12/31/05 CIVIL STATE OF CALIFORNIA

The State of California or its officers or agents shall not be responsible for the accuracy or completeness of electronic copies of this plan sheet.

T.Y. LIN / MOFFATT & NICHOL
825 BATTERY STREET
SAN FRANCISCO, CA 94111

Caltrans now has a web site! To get to the web site, go to: http://www.dot.ca.gov

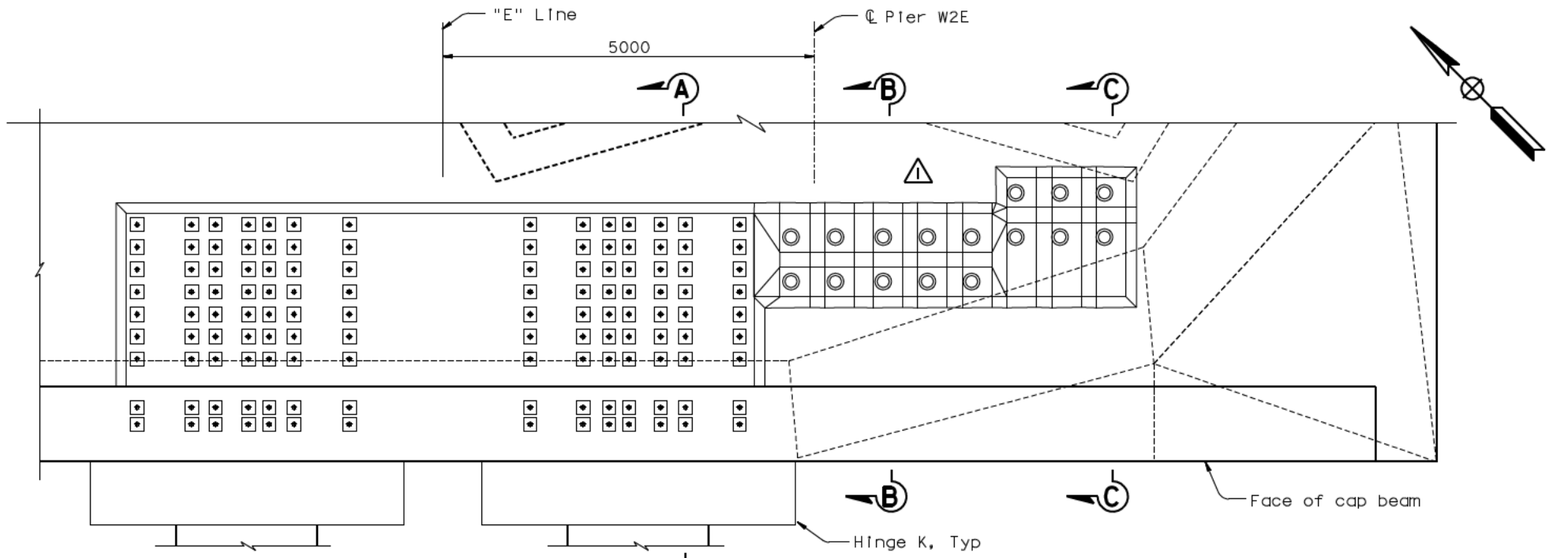

PLAN
1:40
(36 Dia post-tension rod and 12-15 Dia strand tendon blockouts)

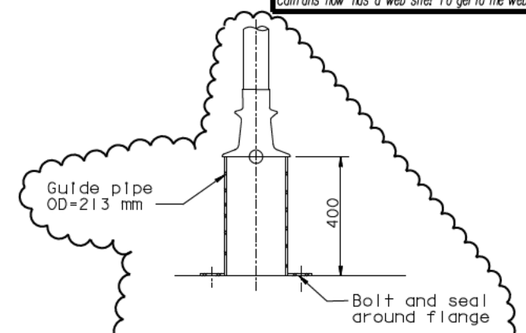

DEAD END GUIDE PIPE
NTS (see Note 6)

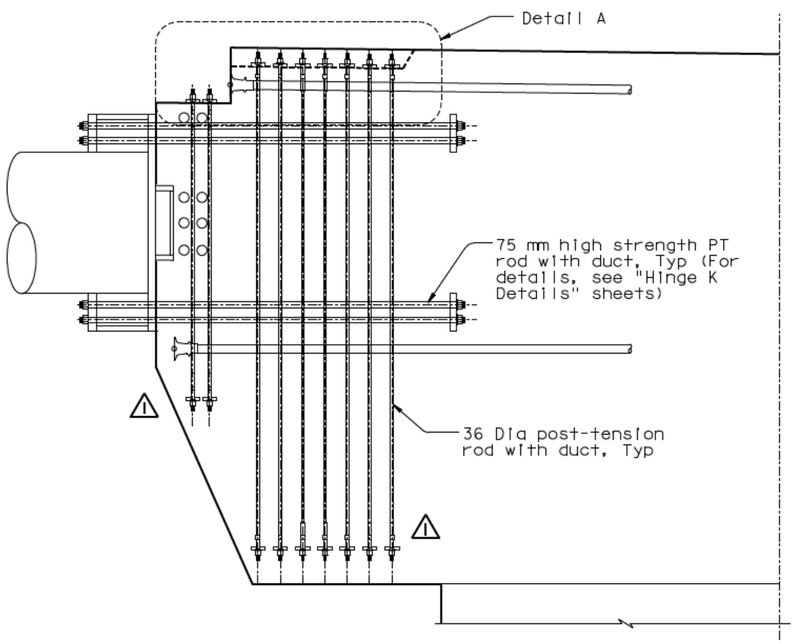

SECTION A-A
1:40

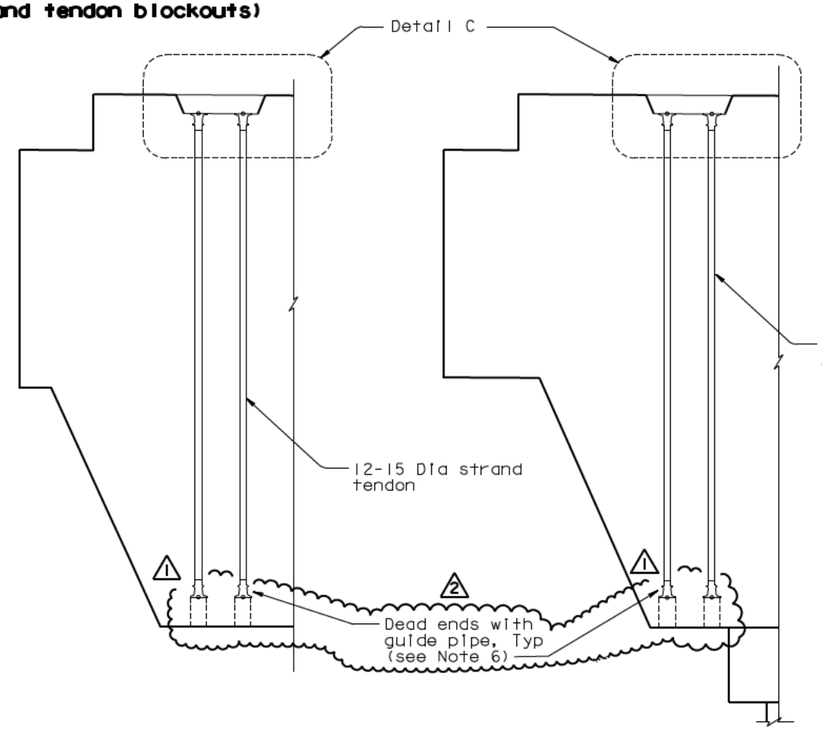

SECTION B-B
1:40

SECTION C-C
1:40

ALL DIMENSIONS ARE IN MILLIMETERS UNLESS OTHERWISE SHOWN

NOTES:
1. Cap beam reinforcement not shown for clarity.
2. Local confining spiral reinforcement for tendon anchors shall be provided by PT tendon hardware supplier.
3. Blockouts on the cap beam "E" Line shown, blockouts on the cap beam "W" Line similar.
4. For Details A and C, see "W2 Cap Beam Blockout Details No. 12" sheet.
5. For additional prestressing details, see "Prestressing Notes" sheet.
6. Contractor shall coordinate the dead end guide pipe details with the PT Supplier and shall submit them to the Engineer for review and approval. Contractor shall grout the guide pipe after stressing operations have been completed.

REGISTERED PROFESSIONAL ENGINEER James P. Duxbury No. C 64677 Exp. 06/30/07 CIVIL STATE OF CALIFORNIA

FOR REVISIONS ONLY

MARK	DATE	DESCRIPTIONS	BY	CH'D	CCO#
2	01/31/07	CORROSION PROTECTION	JD	AS	16
1	07/21/06	W2 CAP BEAM ISD	JD	NV	23

REVISIONS

CONTRACT CHANGE ORDER NO. ____
SHEET ___ OF ___

100 % PS&E

SAN FRANCISCO OAKLAND BAY BRIDGE
EAST SPAN SEISMIC SAFETY PROJECT
SELF-ANCHORED SUSPENSION BRIDGE
(SUPERSTRUCTURE & TOWER)

W2 CAP BEAM BLOCKOUT DETAILS NO. 11

R. Valizadeh/V. Toan/Y.L./W.L./F.C.
DESIGN OVERSIGHT
SIGN OFF DATE 01/31/07

	BY	CHECKED
DESIGN	J. Sun	M. Chen
DETAILS	J. Duxbury	M. Chen
QUANTITIES	S. Shi	D. Harrison

PREPARED FOR THE STATE OF CALIFORNIA DEPARTMENT OF TRANSPORTATION

R. Manzanarez
PROJECT ENGINEER

BRIDGE NO. 34-0006L/R
KILOMETER POST 13.2/13.9

Rev. Date: 5-18-98

ORIGINAL SCALE IN MILLIMETERS FOR REDUCED PLANS 0 10 20 30 40 50 60 70 80 90 100

CU 04
EA 0120F1

DISREGARD PRINTS BEARING EARLIER REVISION DATES 05/31/01 01/08/02 07/09/02 12/19/02

SHEET 91R2 OF

FILE -> I:\bb\04-012001\sas\contract plans and cco\cco\in progress\cco#16\aecbb11.dgn

USERNAME => visitor DATE PLOTTED => 15 MAR 2007 TIME PLOTTED => 15:35:58

DIST.	COUNTY	ROUTE	KILOMETER POST TOTAL PROJECT	SHEET NO.	TOTAL SHEETS
04	SF	80	13.2/13.9	509R2	1204

Caltrans Metric

REGISTERED ENGINEER - CIVIL

12-6-04
PLANS APPROVAL DATE

REGISTERED PROFESSIONAL ENGINEER John Sun No. C 54648 Exp. 12/31/05 CIVIL STATE OF CALIFORNIA

The State of California or its officers or agents shall not be responsible for the accuracy or completeness of electronic copies of this plan sheet.

T.Y. LIN / MOFFATT & NICHOL
825 BATTERY STREET
SAN FRANCISCO, CA 94111

Caltrans now has a web site! To get to the web site, go to: http://www.dot.ca.gov

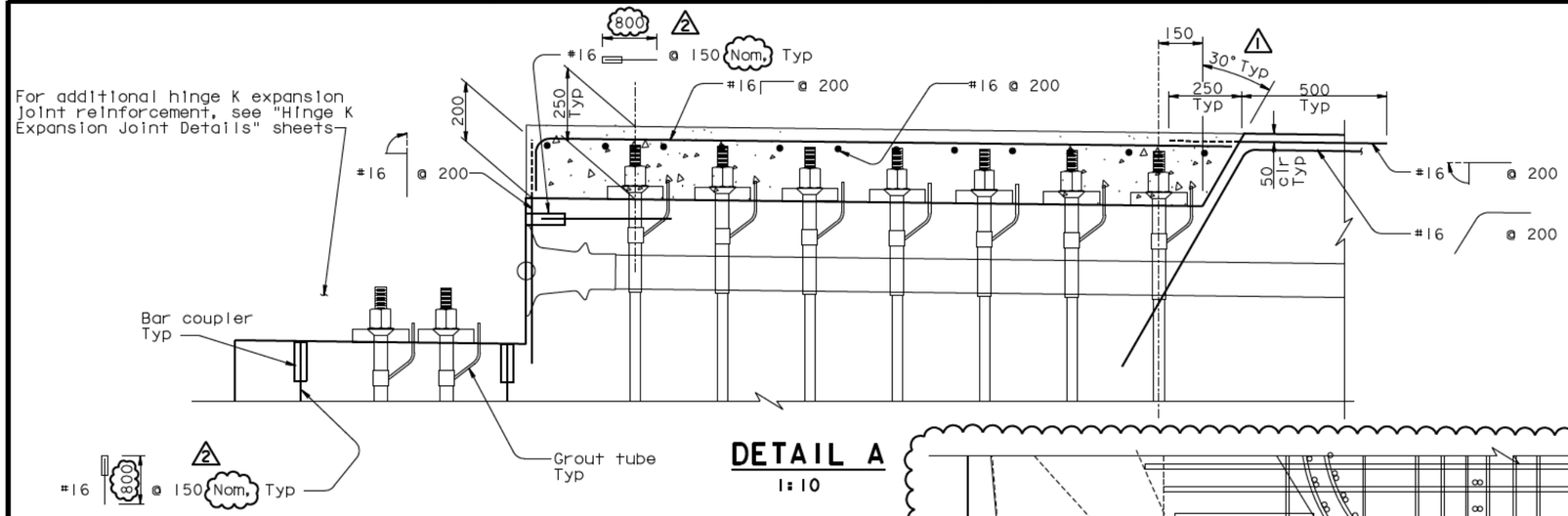

DETAIL A
1:10

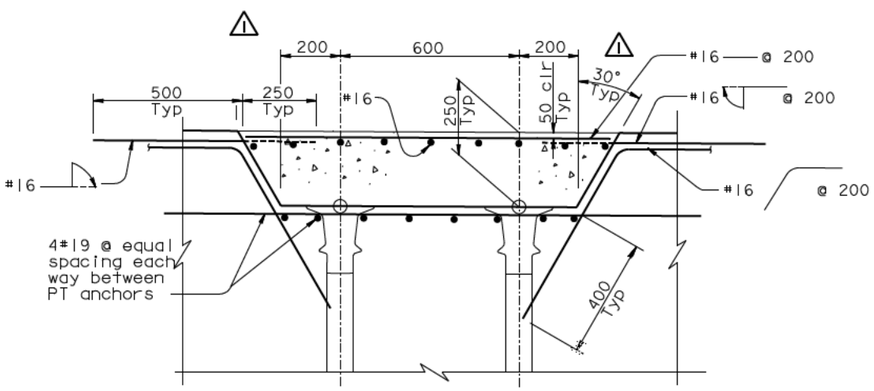

DETAIL C
1:10

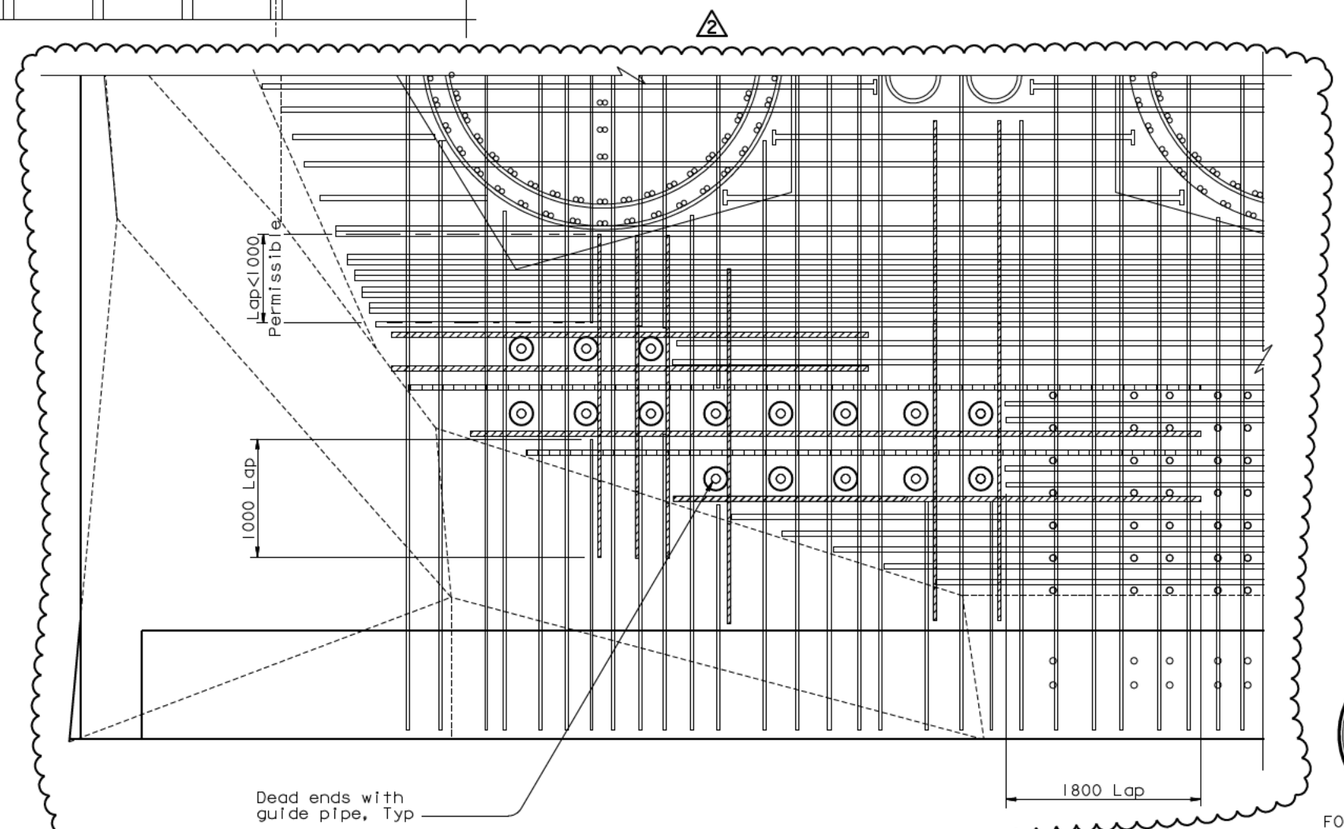

DEAD END GUIDE PIPE BOTTOM MAT REINFORCEMENT ALTERNATE
NTS

NOTES:

1. For additional details, see "W2 Cap Beam Blockout Details No. 11" sheet.
2. Cap beam reinforcement not shown for clarity.
3. Local confining spiral reinforcement per tendon anchors shall be provided by PT tendon hardware supplier.

REGISTERED PROFESSIONAL ENGINEER James P. Duxbury No. C 64677 Exp. 06/30/07 CIVIL STATE OF CALIFORNIA

FOR REVISIONS ONLY

MARK	DATE	DESCRIPTIONS	BY	CH'D	CCO#
2	01/31/07	CORROSION PROTECTION	JD	AS	16
1	07/21/06	W2 CAP BEAM ISD	JD	NV	23

REVISIONS

CONTRACT CHANGE ORDER NO. ____
SHEET ___ OF ___

ALL DIMENSIONS ARE IN MILLIMETERS UNLESS OTHERWISE SHOWN

SAN FRANCISCO OAKLAND BAY BRIDGE
EAST SPAN SEISMIC SAFETY PROJECT
SELF-ANCHORED SUSPENSION BRIDGE
(SUPERSTRUCTURE & TOWER)

W2 CAP BEAM BLOCKOUT DETAILS NO. 12

R. Valizadeh/V. Toan/Y.L./W.L./F.C.
DESIGN OVERSIGHT
SIGN OFF DATE 01/31/07

	BY	CHECKED
DESIGN	J. Sun	M. Chen
DETAILS	J. Duxbury	M. Chen
QUANTITIES	S. Shi	D. Harrison

PREPARED FOR THE STATE OF CALIFORNIA DEPARTMENT OF TRANSPORTATION

R. Manzanarez
PROJECT ENGINEER

BRIDGE NO. 34-0006L/R
KILOMETER POST 13.2/13.9

Rev. Date: 5-18-98

ORIGINAL SCALE IN MILLIMETERS FOR REDUCED PLANS 0 10 20 30 40 50 60 70 80 90 100

CU 04
EA 0120F1

DISREGARD PRINTS BEARING EARLIER REVISION DATES

REVISION DATES (PRELIMINARY STAGE ONLY) 05/24/01 04/08/02 07/08/02 12/19/02

SHEET 92R2 OF

FILE -> I:\bb\04-012001\sas\contract plans and cco\cco\in progress\cco#16\aecbb12.dgn

USERNAME => visitor DATE PLOTTED => 15 MAR 2007 TIME PLOTTED => 15:37:14

100 % PS&E

Plan Sheet List

Drawing No	Rev	Date	Description	Location	SubLoc Type	Discipline	Status	Comments
0462	2	31-Jan-2007	W2 Cap Beam Post-Tensioning Details No. 2	016			A	045R2 - 0462R2 - CCO 016
0463	2	31-Jan-2007	W2 Cap Beam Post-Tensioning Details No. 2	016			A	046R2 - 0463R2 - CCO 016
0466	3	16-Feb-2007	W2 Cap Beam Post-Tensioning Details No. 5	016			A	049R3 - 0466R3 - CCO 027
0468	3	16-Feb-2007	W2 Cap Beam Post-Tensioning Details No. 7	016			A	051R3 - 0468R3 - CCO 027
0470	3	16-Feb-2007	W2 Cap Beam Post-Tensioning Details No. 9	016			A	053R3 - 0470R3 - CCO 034
0473	3	16-Feb-2007	W2 Cap Beam Post-Tensioning Details No. 12	016			A	056R3 - 0473R3 - CCO 034
0499	2	31-Jan-2007	W2 Cap Beam Blockout Details No. 2	016			A	082R2 - 0499R2 - CCO 016
0506	2	31-Jan-2007	W2 Cap Beam Blockout Details No. 9	016			A	089R2 - 0506R2 - CCO 016
0507	2	31-Jan-2007	W2 Cap Beam Blockout Details No. 10	016			A	090R2 - 0507R2 - CCO 016
0508	2	31-Jan-2007	W2 Cap Beam Blockout Details No. 11	016			A	091R2 - 0508R2 - CCO 016
0509	2	31-Jan-2007	W2 Cap Beam Blockout Details No. 12	016			A	092R2 - 0509R2 - CCO 016

Caltrans now has a web site! To get to the web site, go to: http://www.dot.ca.gov

MARK	DATE	DESCRIPTIONS	BY	CH'D	CCO#
2	01/31/07	CORROSION PROTECTION	JD	AS	16
1	07/21/06	W2 CAP BEAM ISD	JD	NV	23

REVISIONS

CONTRACT CHANGE ORDER NO. ____
SHEET ___ OF ___

REGISTERED PROFESSIONAL ENGINEER James P. Duxbury No. C 64677 Exp. 06/30/07 CIVIL STATE OF CALIFORNIA

FOR REVISIONS ONLY

Caltrans Metric

DIST.	COUNTY	ROUTE	KILOMETER POST TOTAL PROJECT	SHEET NO.	TOTAL SHEETS
04	SF	80	13.2/13.9	462R2	1204

REGISTERED ENGINEER - CIVIL

12-6-04
PLANS APPROVAL DATE

REGISTERED PROFESSIONAL ENGINEER John Sun No. C 54648 Exp. 12/31/05 CIVIL STATE OF CALIFORNIA

The State of California or its officers or agents shall not be responsible for the accuracy or completeness of electronic copies of this plan sheet.

T.Y. LIN / MOFFATT & NICHOL
825 BATTERY STREET
SAN FRANCISCO, CA 94111

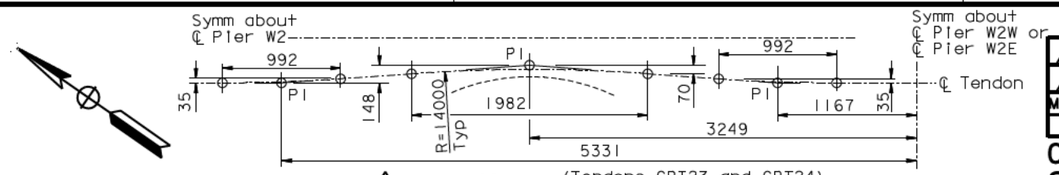

⚠1 DETAIL A'
1:25
(Tendons CBT23 and CBT24)
(Tendons CBT30 and CBT31)

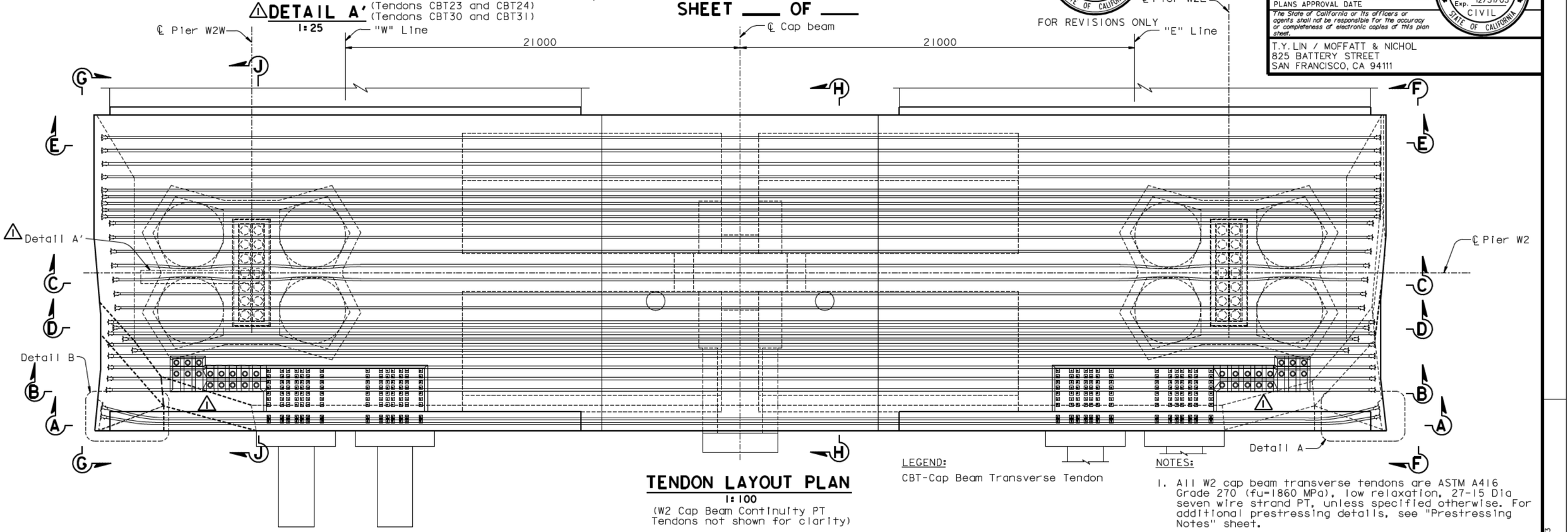

TENDON LAYOUT PLAN
1:100
(W2 Cap Beam Continuity PT
Tendons not shown for clarity)

LEGEND:
CBT-Cap Beam Transverse Tendon

NOTES:

1. All W2 cap beam transverse tendons are ASTM A416 Grade 270 (fu=1860 MPa), low relaxation, 27-15 Dia seven wire strand PT, unless specified otherwise. For additional prestressing details, see "Prestressing Notes" sheet.
2. For Section A-A, see "W2 Cap Beam Post-Tensioning Details No.2" sheet.
3. For Sections B-B through E-E, see "W2 Cap Beam Post-Tensioning Details No.3" sheet.
4. For Sections F-F through J-J, see "W2 Cap Beam Post-Tensioning Details No.4" sheet.
5. For bikepath details near cap beam, see "Bikepath Details" sheets.
6. For PT blockout dimensions, see "W2 Cap Beam Blockout Details" sheets.
7. Jacking force in the W2 cap beam transverse tendons (CBT1-CBT36) shall be 5265 kN typical.
8. For general stressing sequence, see "Pier W2 Construction Sequence" sheet.
9. For "W2 Cap Beam Post-Tensioning Details" sheets, the Contractor shall verify all controlling field dimensions before ordering or fabricating any material.
10. W2 cap beam elevations are to top of finished concrete and do not include overlay thickness.

ALL DIMENSIONS ARE IN MILLIMETERS UNLESS OTHERWISE SHOWN

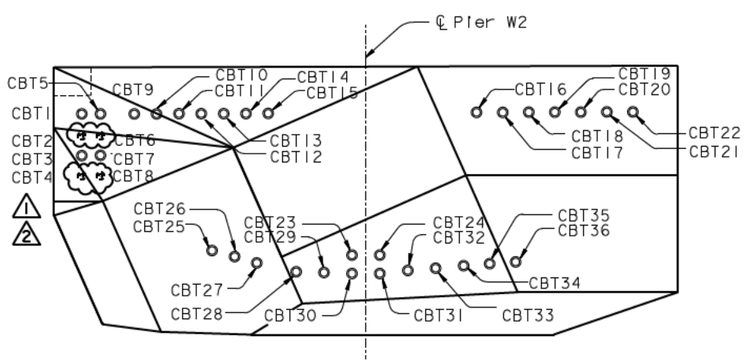

TENDON DESIGNATION
1:80

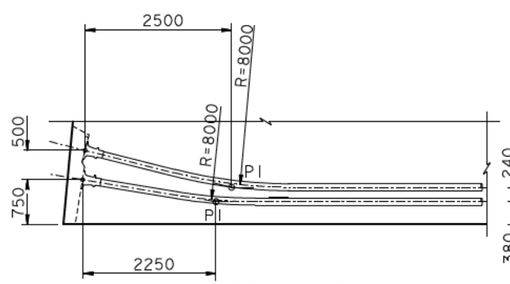

DETAIL B
1:50
(Tendons CBT1 and CBT5)
⚠1 (Tendons CBT2 thru CBT8 similar)

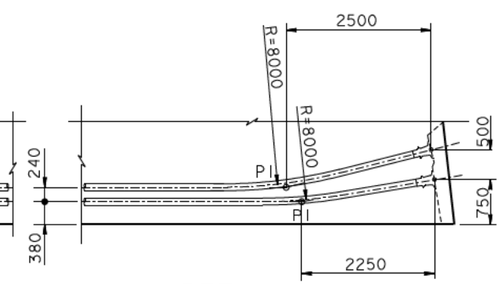

DETAIL A
1:50
(Tendons CBT1 and CBT5)
⚠1 (Tendons CBT2 thru CBT8 similar)

SAN FRANCISCO OAKLAND BAY BRIDGE
EAST SPAN SEISMIC SAFETY PROJECT
SELF-ANCHORED SUSPENSION BRIDGE
(SUPERSTRUCTURE & TOWER)

W2 CAP BEAM POST-TENSIONING DETAILS NO. 1

R. Valizadeh/V. Toan/Y.L./W.L./F.C.
DESIGN OVERSIGHT
SIGN OFF DATE 01/31/07

	BY	CHECKED
DESIGN	J. Sun	M. Chen
DETAILS	J. Duxbury	M. Chen
QUANTITIES	S. Shi	D. Harrison

PREPARED FOR THE STATE OF CALIFORNIA DEPARTMENT OF TRANSPORTATION

R. Manzanarez
PROJECT ENGINEER

BRIDGE NO. 34-0006L/R
KILOMETER POST 13.2/13.9

CU 04
EA 0120F1

Rev. Date: 5-18-98

ORIGINAL SCALE IN MILLIMETERS FOR REDUCED PLANS 0 10 20 30 40 50 60 70 80 90 100

DISREGARD PRINTS BEARING EARLIER REVISION DATES

REVISION DATES (PRELIMINARY STAGE ONLY) 09/28/99 05/31/01 04/26/02 07/24/02 12/19/02

SHEET 045R2 OF

FILE -> I:\bb\04-012001\sas\contract plans and cco\cco\in progress\cco#16\aecpt01.dgn

USERNAME -> visitor DATE PLOTTED => 15 MAR 2007 TIME PLOTTED => 15:12:43

100 % PS&E

DIST.	COUNTY	ROUTE	KILOMETER POST TOTAL PROJECT	SHEET NO.	TOTAL SHEETS
04	SF	80	13.2/13.9	463R2	1204

REGISTERED ENGINEER - CIVIL

12-6-04
PLANS APPROVAL DATE

REGISTERED PROFESSIONAL ENGINEER John Sun No. C 54648 Exp. 12/31/05 CIVIL STATE OF CALIFORNIA

The State of California or its officers or agents shall not be responsible for the accuracy or completeness of electronic copies of this plan sheet.

T.Y. LIN / MOFFATT & NICHOL
825 BATTERY STREET
SAN FRANCISCO, CA 94111

Caltrans now has a web site! To get to the web site, go to: http://www.dot.ca.gov

REGISTERED PROFESSIONAL ENGINEER James P. Duxbury No. C 64677 Exp. 06/30/07 CIVIL STATE OF CALIFORNIA

FOR REVISIONS ONLY

MARK	DATE	DESCRIPTIONS	BY	CH'D	CCO#
2	01/31/07	CORROSION PROTECTION	JD	AS	16
1	07/21/06	W2 CAP BEAM ISD	JD	NV	23

REVISIONS

CONTRACT CHANGE ORDER NO. ____
SHEET ___ OF ___

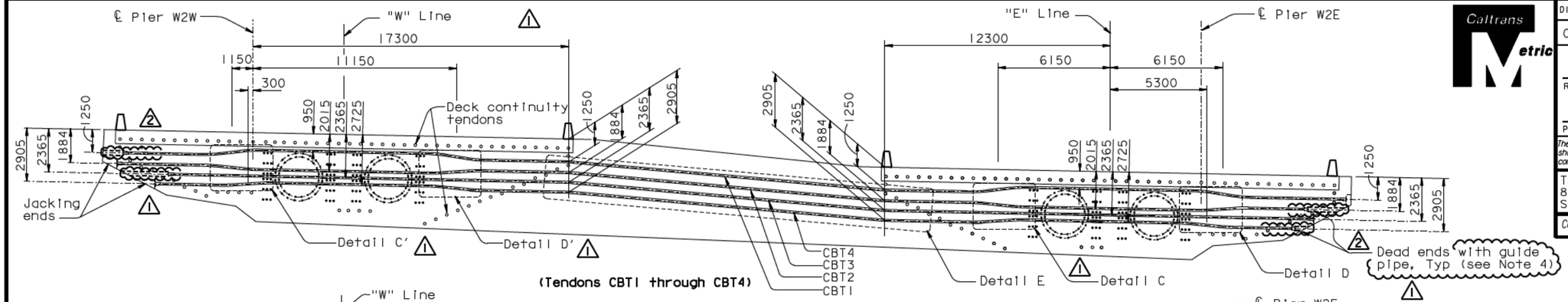

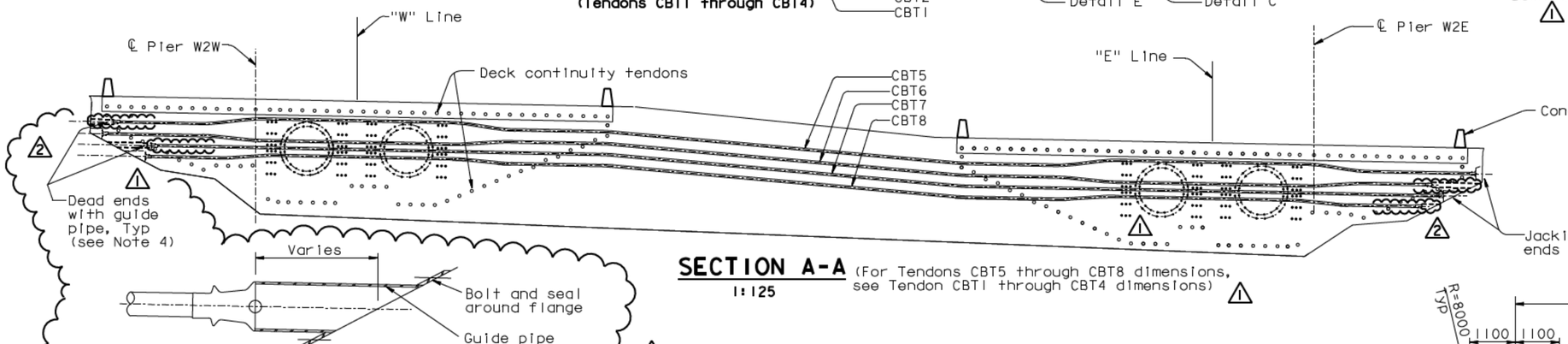

SECTION A-A (For Tendons CBT5 through CBT8 dimensions, see Tendon CBT1 through CBT4 dimensions)
1:125

DEAD END GUIDE PIPE
NTS (see Note 4)

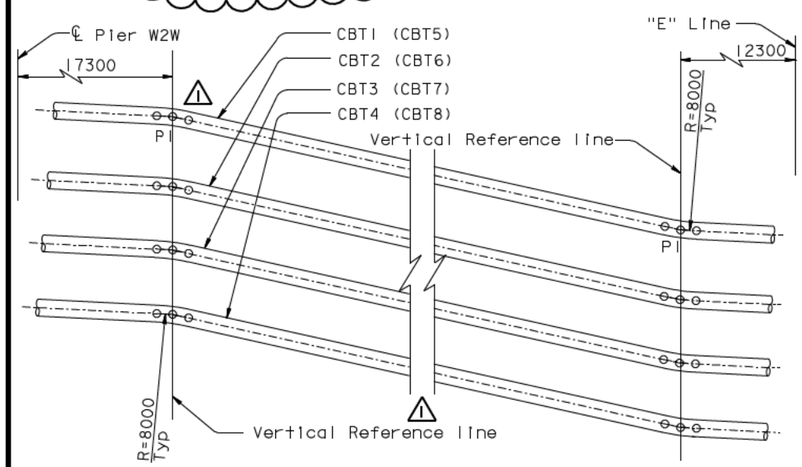

DETAIL E
NTS

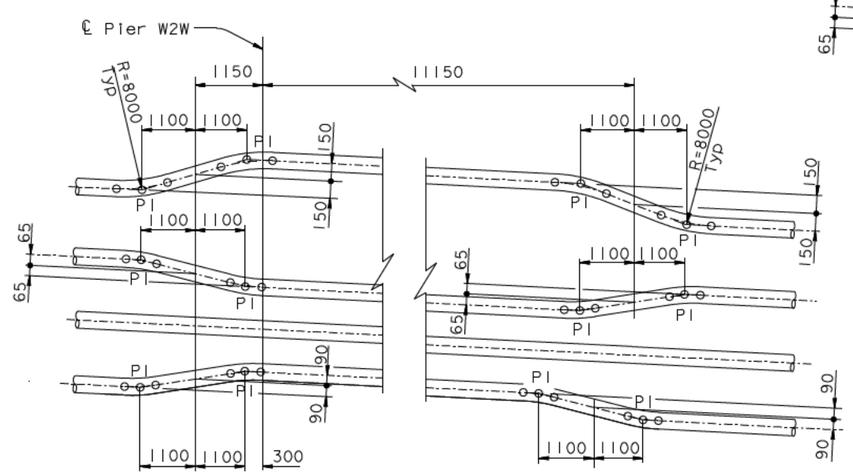

DETAIL C'
NTS

DETAIL D'
NTS

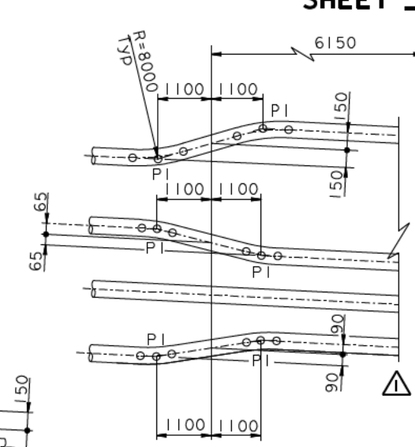

DETAIL C
NTS

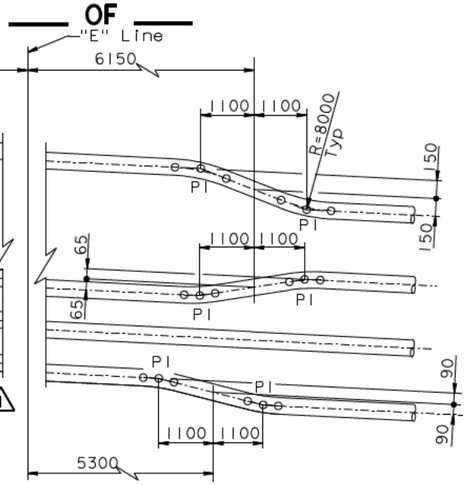

DETAIL D
NTS

NOTES:

1. For additional details, see "W2 Cap Beam Post-Tensioning Details No.1" sheet.
2. For PT blockout details, see "W2 Cap Beam Blockout Details" sheets.
3. For deck continuity tendon details, see "W2 Cap Beam Post-Tensioning Details No.5" through "W2 Cap Beam Post-Tensioning Details No.12" sheets.
4. Contractor shall coordinate the dead end guide pipe details with the PT System Supplier and shall submit them to the Engineer for review and approval. Contractor shall grout the guide pipe after stressing operations have been completed.

ALL DIMENSIONS ARE IN MILLIMETERS UNLESS OTHERWISE SHOWN

100 % PS&E

DATE PLOTTED => 15 MAR 2007 TIME PLOTTED => 15:24:30

USERNAME => visitor

R. Vallzadeh/V. Toan/Y.L./W.L./F.C.
DESIGN OVERSIGHT
SIGN OFF DATE 01/31/07

Rev. Date: 5-18-98

	BY	CHECKED
DESIGN	J. Sun	M. Chen
DETAILS	J. Duxbury	M. Chen
QUANTITIES	S. Shi	D. Harrison

ORIGINAL SCALE IN MILLIMETERS FOR REDUCED PLANS 0 10 20 30 40 50 60 70 80 90 100

PREPARED FOR THE STATE OF CALIFORNIA DEPARTMENT OF TRANSPORTATION

R. Manzanarez
PROJECT ENGINEER

CU 04
EA 0120F1

BRIDGE NO. 34-0006L/R
KILOMETER POST 13.2/13.9

DISREGARD PRINTS BEARING EARLIER REVISION DATES

REVISION DATES (PRELIMINARY STAGE ONLY): 08/08/99 05/31/01 04/08/02 07/01/02 12/19/02

SHEET 046R2 OF

SAN FRANCISCO OAKLAND BAY BRIDGE
EAST SPAN SEISMIC SAFETY PROJECT
SELF-ANCHORED SUSPENSION BRIDGE (SUPERSTRUCTURE & TOWER)

W2 CAP BEAM POST-TENSIONING DETAILS NO. 2

FILE => I:\bb\04-012001\sas\contract plans and cco\cco\in progress\cco#16\aecpt02.dgn

DIST.	COUNTY	ROUTE	KILOMETER POST TOTAL PROJECT	SHEET NO.	TOTAL SHEETS
04	SF	80	13.2/13.9	466R2	1204

REGISTERED ENGINEER - CIVIL

12-6-04
PLANS APPROVAL DATE

REGISTERED PROFESSIONAL ENGINEER John Sun No. C 54648 Exp. 12/31/05 CIVIL STATE OF CALIFORNIA

The State of California or its officers or agents shall not be responsible for the accuracy or completeness of electronic copies of this plan sheet.

T.Y. LIN / MOFFATT & NICHOL
825 BATTERY STREET
SAN FRANCISCO, CA 94111

Caltrans now has a web site! To get to the web site, go to: http://www.dot.ca.gov

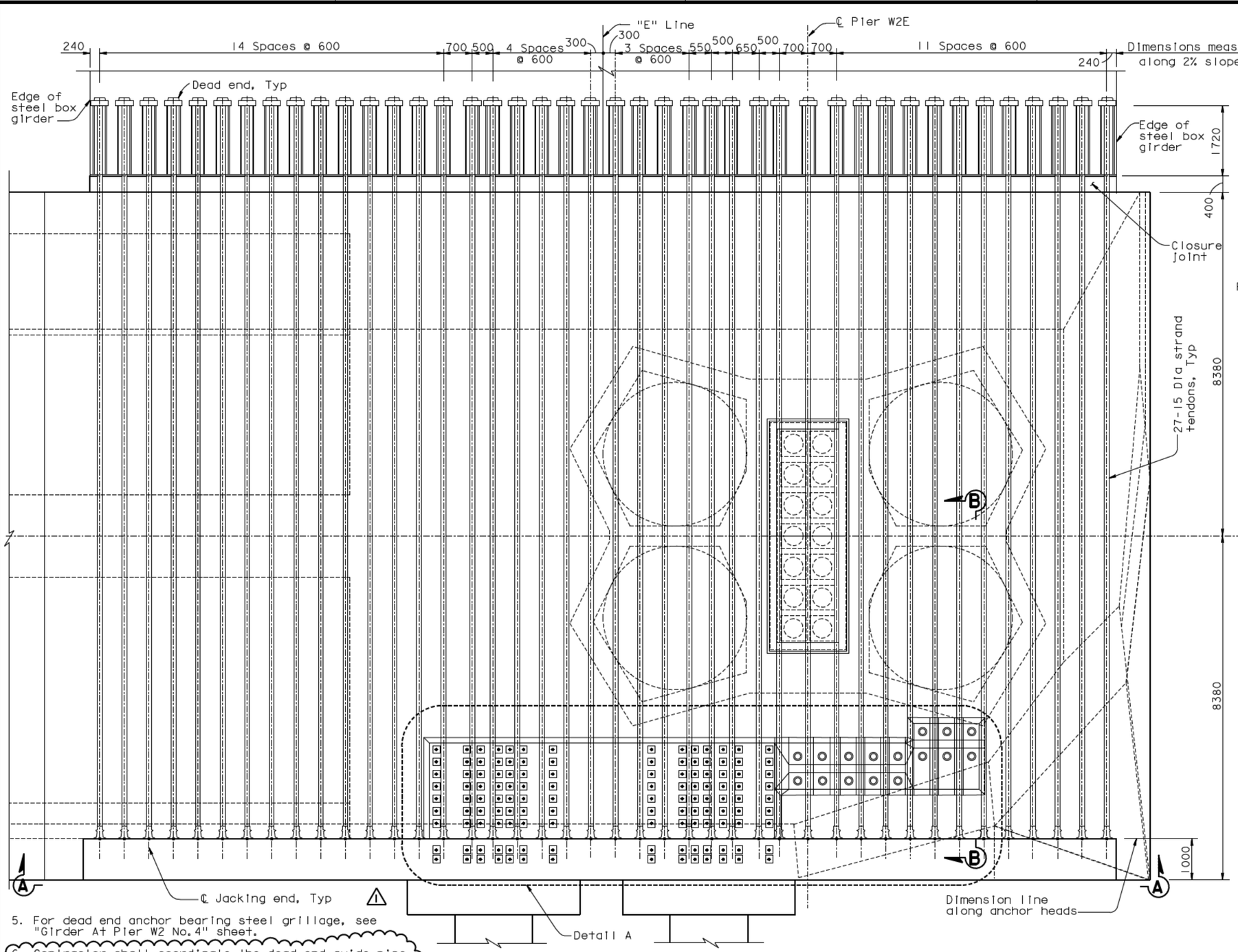

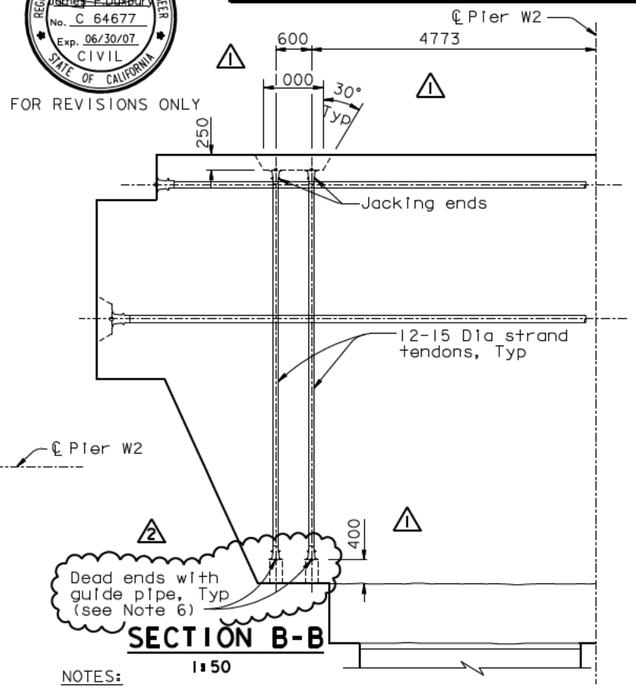

SECTION B-B
1:50

NOTES:

1. For Section A-A, see "W2 Cap Beam Post-Tensioning Details No.9" sheet.
2. For Detail A, see "W2 Cap Beam Post-Tensioning Details No.10" sheet.
3. All W2 cap beam continuity tendons are ASTM A416 Grade 270 (fu=1860 MPa), low relaxation, 27-15 Dia seven wire strand PT, unless specified otherwise. For additional prestressing details, see "Prestressing Notes" sheet.
4. For blockout details, see "W2 Cap Beam Blockout Details" sheets.

5. For dead end anchor bearing steel grillage, see "Girder At Pier W2 No.4" sheet.
6. Contractor shall coordinate the dead end guide pipe details with the PT System Supplier and shall submit them to the Engineer for review and approval. Contractor shall grout the guide pipe after stressing operations have been completed.

TOP TENDON LAYOUT PLAN ("E" Line)
1:50

ALL DIMENSIONS ARE IN MILLIMETERS UNLESS OTHERWISE SHOWN

MARK	DATE	DESCRIPTIONS	BY	CH'D	CCO#
2	01/31/07	CORROSION PROTECTION	JD	AS	16
1	07/21/06	W2 CAP BEAM ISD	JD	NV	23

REVISIONS

CONTRACT CHANGE ORDER NO. ____
SHEET ____ OF ____

SAN FRANCISCO OAKLAND BAY BRIDGE
EAST SPAN SEISMIC SAFETY PROJECT
SELF-ANCHORED SUSPENSION BRIDGE
(SUPERSTRUCTURE & TOWER)

W2 CAP BEAM POST-TENSIONING DETAILS NO.5

R. Valizadeh/V.Toan/Y.L./W.L./F.C.
DESIGN OVERSIGHT
SIGN OFF DATE 01/31/07

	BY	CHECKED
DESIGN	J. Sun	M. Chen
DETAILS	J. Duxbury	M. Chen
QUANTITIES	S. Shi	D. Harrison

PREPARED FOR THE STATE OF CALIFORNIA DEPARTMENT OF TRANSPORTATION

R. Manzanarez
PROJECT ENGINEER

BRIDGE NO. 34-0006L/R
KILOMETER POST 13.2/13.9

Rev. Date: 5-18-98

ORIGINAL SCALE IN MILLIMETERS FOR REDUCED PLANS 0 10 20 30 40 50 60 70 80 90 100

CU 04
EA 0120F1

DISREGARD PRINTS BEARING EARLIER REVISION DATES

REVISION DATES (PRELIMINARY STAGE ONLY) 08/02/99 05/31/01 04/08/02 07/01/02 12/19/02

SHEET 049R2 OF

FILE -> I:\bb\04-012001\sas\contract plans and cco\cco\in progress\cco#16\aecpt05.dgn

100 % PS&E

USERNAME => visitor DATE PLOTTED => 15 MAR 2007 TIME PLOTTED => 15:26:12

DIST.	COUNTY	ROUTE	KILOMETER POST TOTAL PROJECT	SHEET NO.	TOTAL SHEETS
04	SF	80	13.2/13.9	468R2	1204

REGISTERED ENGINEER - CIVIL

12-6-04
PLANS APPROVAL DATE

REGISTERED PROFESSIONAL ENGINEER John Sun No. C 54648 Exp. 12/31/05 CIVIL STATE OF CALIFORNIA

The State of California or its officers or agents shall not be responsible for the accuracy or completeness of electronic copies of this plan sheet.

T.Y. LIN / MOFFATT & NICHOL
825 BATTERY STREET
SAN FRANCISCO, CA 94111

Caltrans now has a web site! To get to the web site, go to: http://www.dot.ca.gov

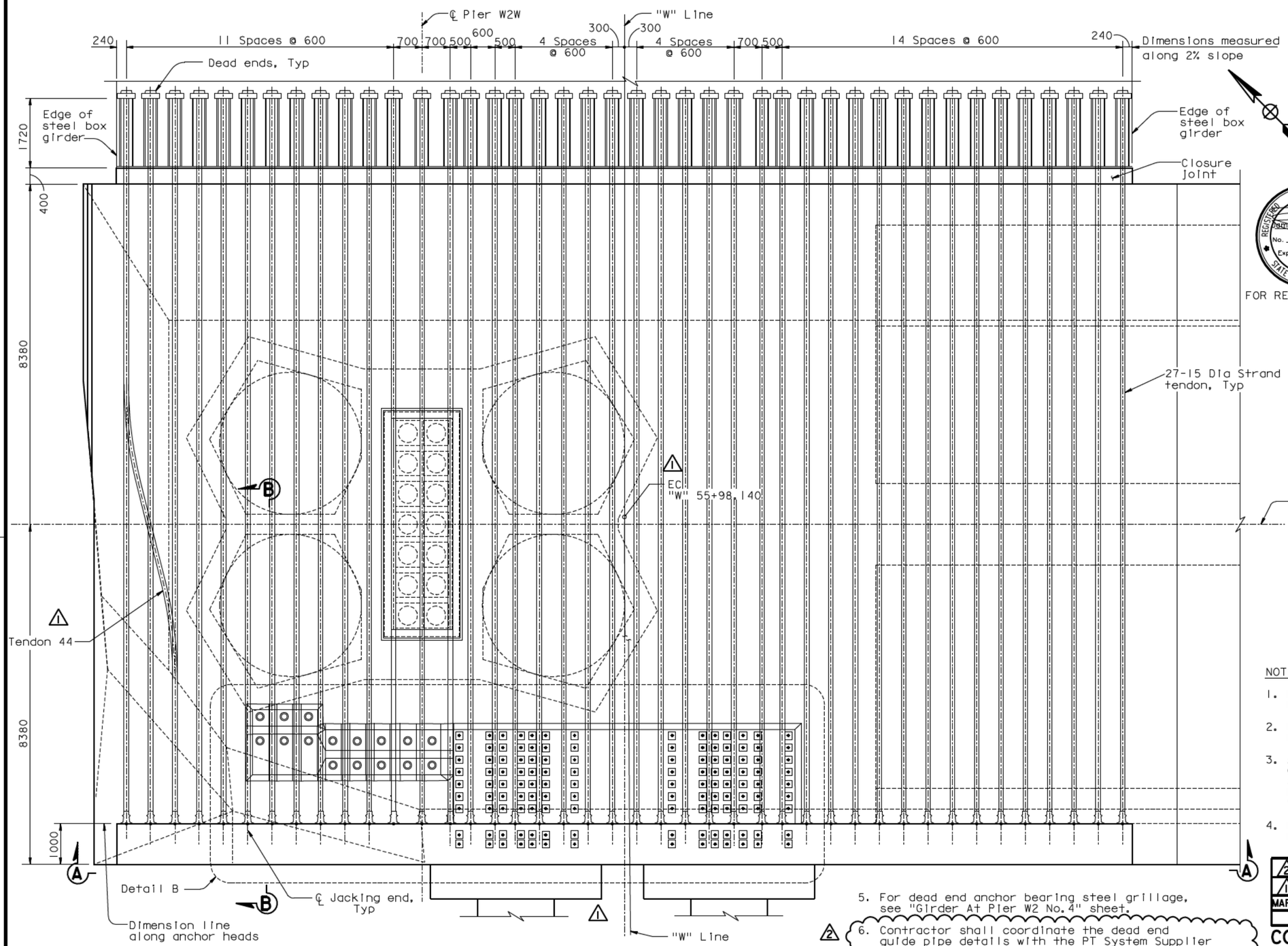

TOP TENDON LAYOUT PLAN ("W" Line)

1:50

ALL DIMENSIONS ARE IN MILLIMETERS UNLESS OTHERWISE SHOWN

REGISTERED PROFESSIONAL ENGINEER James P. Duxbury No. C 64677 Exp. 06/30/07 CIVIL STATE OF CALIFORNIA

FOR REVISIONS ONLY

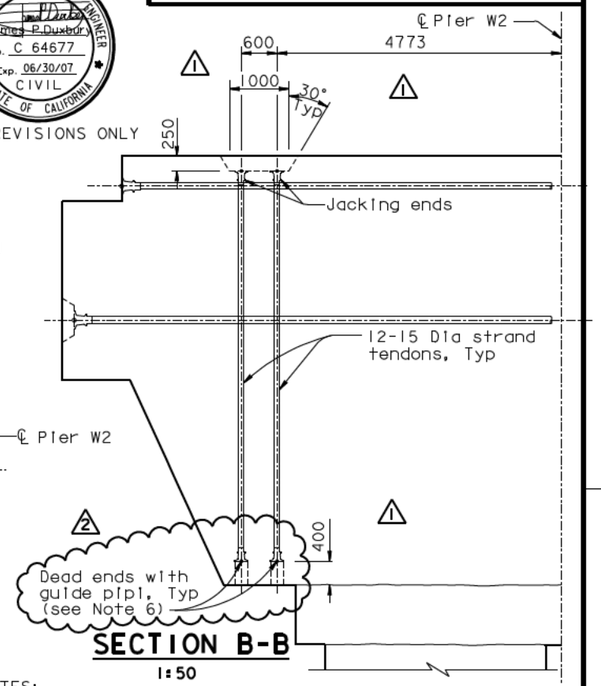

SECTION B-B

1:50

NOTES:

1. For Section A-A, see "W2 Cap Beam Post-Tensioning Details No. 9" sheet.
2. For Detail B, see "W2 Cap Beam Post-Tensioning Details No. 10" sheet.
3. All W2 cap beam continuity tendons are ASTM A416 Grade 270 (fu=1860 MPa), low relaxation, 27-15 Dia seven wire strand PT, unless specified otherwise. For additional prestressing details, see "Prestressing Notes" sheet.
4. For blockout details, see "W2 Cap Beam Blockout Details" sheets.
5. For dead end anchor bearing steel grillage, see "Girder At Pier W2 No. 4" sheet.
6. Contractor shall coordinate the dead end guide pipe details with the PT System Supplier and shall submit them to the Engineer for review and approval. Contractor shall grout the guide pipe after stressing operations have been completed.

MARK	DATE	DESCRIPTIONS	BY	CH'D	CCO#
2	01/31/07	CORROSION PROTECTION	JD	AS	16
1	07/21/06	W2 CAP BEAM ISD	JD	NV	23

REVISIONS

CONTRACT CHANGE ORDER NO. ____
SHEET ___ OF ___

100 % PS&E

SAN FRANCISCO OAKLAND BAY BRIDGE
EAST SPAN SEISMIC SAFETY PROJECT
SELF-ANCHORED SUSPENSION BRIDGE
(SUPERSTRUCTURE & TOWER)

W2 CAP BEAM POST-TENSIONING DETAILS NO. 7

R. Valizadeh/V. Toan/Y.L./W.L./F.C.
DESIGN OVERSIGHT
Roger Valizadeh / Vong Toan / Y. Lin
SIGN OFF DATE 01/31/07

	BY	CHECKED
DESIGN	J. Sun	M. Chen
DETAILS	J. Duxbury	M. Chen
QUANTITIES	S. Shi	D. Harrison

PREPARED FOR THE STATE OF CALIFORNIA DEPARTMENT OF TRANSPORTATION

R. Manzanarez
PROJECT ENGINEER

BRIDGE NO. 34-0006L/R
KILOMETER POST 13.2/13.9

Rev. Date: 5-18-98

ORIGINAL SCALE IN MILLIMETERS FOR REDUCED PLANS 0 10 20 30 40 50 60 70 80 90 100

CU 04
EA 0120F1

DISREGARD PRINTS BEARING EARLIER REVISION DATES

REVISION DATES (PRELIMINARY STAGE ONLY) 08/02/99 05/31/01 04/08/02 07/01/02 12/19/02

SHEET 051R2 OF

FILE -> I:\bb\04-012001\sas\contract plans and cco\cco\in progress\cco#16\aecpt07.dgn

USERNAME => visitor DATE PLOTTED => 15 MAR 2007 TIME PLOTTED => 15:27:40

DIST.	COUNTY	ROUTE	KILOMETER POST TOTAL PROJECT	SHEET NO.	TOTAL SHEETS
04	SF	80	13.2/13.9	470R2	1204

REGISTERED ENGINEER - CIVIL

12-6-04
PLANS APPROVAL DATE

REGISTERED PROFESSIONAL ENGINEER John Sun No. C 54648 Exp. 12/31/05 CIVIL STATE OF CALIFORNIA

The State of California or its officers or agents shall not be responsible for the accuracy or completeness of electronic copies of this plan sheet.

T.Y. LIN / MOFFATT & NICHOL
825 BATTERY STREET
SAN FRANCISCO, CA 94111

Caltrans now has a web site! To get to the web site, go to: http://www.dot.ca.gov

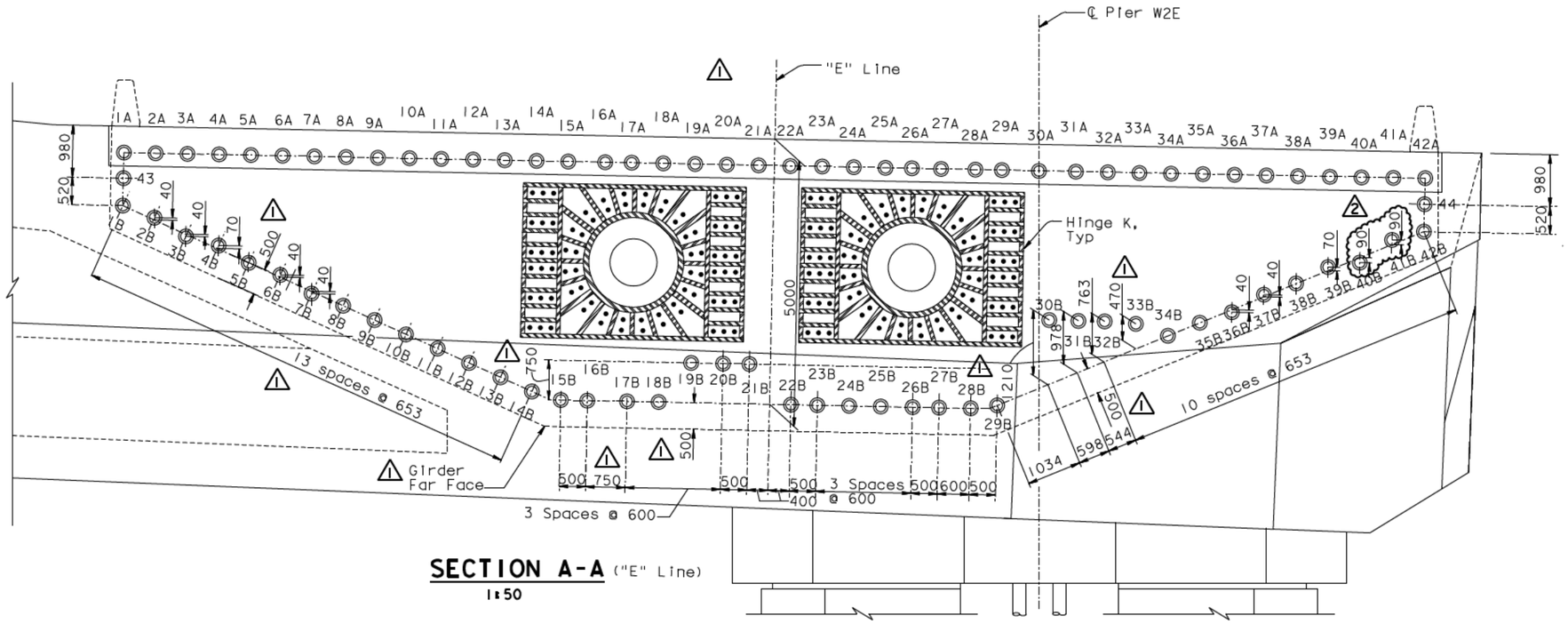

SECTION A-A ("E" Line)
1:50

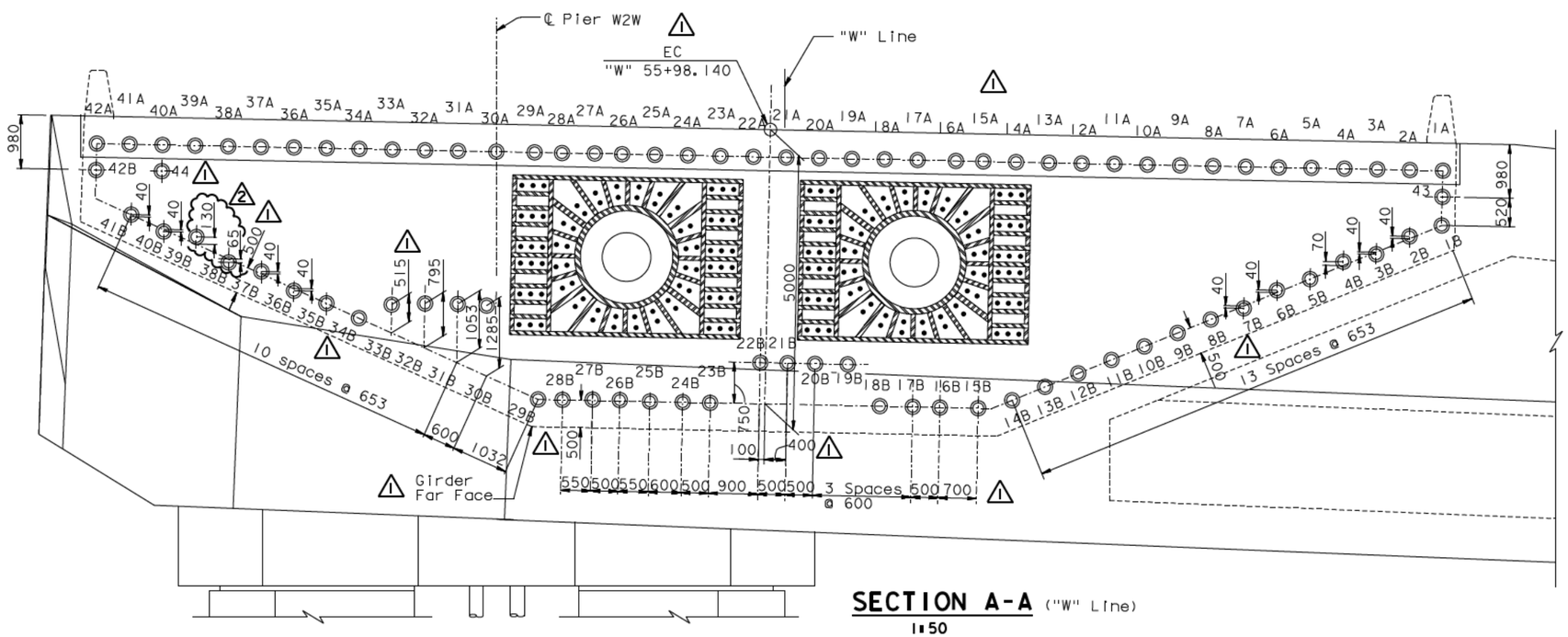

SECTION A-A ("W" Line)
1:50

NOTES:

1. For additional details, see "W2 Cap Beam Post-Tensioning Details No.5" and "W2 Cap Beam Post-Tensioning Details No.7" sheets.
2. Jacking force in the W2 cap beam continuity tendons (1A-42A, 1B-42B, 43 & 44) shall be 5265 kN typical.

REGISTERED PROFESSIONAL ENGINEER James P. Duxbury No. C 64677 Exp. 06/30/07 CIVIL STATE OF CALIFORNIA

FOR REVISIONS ONLY

MARK	DATE	DESCRIPTIONS	BY	CH'D	CCO#
2	01/31/07	CORROSION PROTECTION	JD	AS	16
1	07/21/06	W2 CAP BEAM ISD	JD	NV	23

REVISIONS

CONTRACT CHANGE ORDER NO. ____
SHEET ____ OF ____

ALL DIMENSIONS ARE IN MILLIMETERS UNLESS OTHERWISE SHOWN

SAN FRANCISCO OAKLAND BAY BRIDGE
EAST SPAN SEISMIC SAFETY PROJECT
SELF-ANCHORED SUSPENSION BRIDGE
(SUPERSTRUCTURE & TOWER)

W2 CAP BEAM POST-TENSIONING DETAILS NO. 9

R. Valizadeh/V. Toan/Y.L./W.L./F.C.
DESIGN OVERSIGHT
SIGN OFF DATE 01/31/07

	BY	CHECKED
DESIGN	J. Sun	M. Chen
DETAILS	J. Duxbury	M. Chen
QUANTITIES	S. Shi	D. Harrison

PREPARED FOR THE STATE OF CALIFORNIA DEPARTMENT OF TRANSPORTATION

R. Manzanarez
PROJECT ENGINEER

BRIDGE NO. 34-0006L/R
KILOMETER POST 13.2/13.9

Rev. Date: 5-18-98

ORIGINAL SCALE IN MILLIMETERS FOR REDUCED PLANS 0 10 20 30 40 50 60 70 80 90 100

CU 04
EA 0120F1

DISREGARD PRINTS BEARING EARLIER REVISION DATES

REVISION DATES (PRELIMINARY STAGE ONLY) 08/02/99 05/31/01 04/08/02 07/02/02 12/19/02

SHEET 053R2 OF

FILE -> I:\bb\04-012001\sas\contract plans and cco\cco\in progress\cco#16\aecpt09.dgn

USERNAME => visitor DATE PLOTTED => 15 MAR 2007 TIME PLOTTED => 15:29:05

100 % PS&E

DIST.	COUNTY	ROUTE	KILOMETER POST TOTAL PROJECT	SHEET NO.	TOTAL SHEETS
04	SF	80	13.2/13.9	473R2	1204

Caltrans Metric

REGISTERED ENGINEER - CIVIL

12-6-04
PLANS APPROVAL DATE

REGISTERED PROFESSIONAL ENGINEER John Sun No. C 54648 Exp. 12/31/05 CIVIL STATE OF CALIFORNIA

The State of California or its officers or agents shall not be responsible for the accuracy or completeness of electronic copies of this plan sheet.

T.Y. LIN / MOFFATT & NICHOL
825 BATTERY STREET
SAN FRANCISCO, CA 94111

To get to the web site, go to: http://www.dot.ca.gov

W2 CAP BEAM CONTINUITY TENDON TABLE-1 FOR "E" LINE

Tendon No.	Type	Tendon No.	Type
1A	1	24A	1
1B	2	24B	2
2A	1	25A	1
2B	5	25B	2
3A	1	26A	1
3B	5	26B	2
4A	1	27A	1
4B	5	27B	2
5A	1	28A	1
5B	2	28B	2
6A	1	29A	3
6B	5	29B	2
7A	1	30A	3
△1 7B	5	30B	5, 9
8A	1	31A	3
8B	2	31B	5
9A	1	32A	1
9B	2	32B	5
10A	1	33A	1
10B	2	33B	5
11A	1	34A	1
11B	2	34B	2
12A	1	35A	1
12B	2	35B	2
13A	1	36A	1
13B	2	36B	5
14A	1	37A	1
14B	2	37B	5
15A	1	38A	1
15B	8 △1	38B	2
16A	1	39A	1
16B	8 △1	39B	5
17A	1	40A	1
17B	2	40B	5
18A	1	41A	1
18B	10 △1	41B	5
19A	1	42A	1
19B	4	42B	2
20A	1	43	2
20B	4	44	2
21A	1		
21B	4		
22A	1		
22B	2		
23A	1		
23B	2		

W2 CAP BEAM CONTINUITY TENDON TABLE-1 FOR "W" LINE

Tendon No.	Type	Tendon No.	Type
1A	1	24A	1
1B	2	24B	2
2A	1	25A	1
2B	5	25B	2
3A	1	26A	1
△1 3B	5	26B	8
4A	1	27A	1
△1 4B	5	27B	8
5A	1	28A	1
5B	2	28B	2
6A	1	29A	3
6B	5	29B	2
7A	1	30A	3
△1 7B	5	30B	5, 9
8A	1	31A	3
8B	2	31B	5
9A	1	32A	1
9B	2	32B	5
10A	1	33A	1
10B	2	33B	5
11A	1	34A	1
11B	2	34B	2
12A	1	35A	1
12B	2	35B	2
13A	1	36A	1
13B	2	36B	5
14A	1	37A	1
14B	2	37B	5
15A	1	38A	1
15B	2	38B	5 △2
16A	1	39A	1
16B	2	39B	5
17A	1	40A	1
17B	2	40B	5
18A	1	41A	1
18B	2	41B	5
19A	1	42A	1
19B	4	42B	6 △1
20A	1	43	2
20B	4	44	7 △1
21A	1		
21B	4, 8 △1		
22A	1		
22B	4, 8 △1		
23A	1		
23B	2		

W2 CAP BEAM CONTINUITY TENDON TABLE-2 FOR "E" LINE

Tendon No.	h	L	e_5	R
2B	-40	2200	500	8000
3B	+40	2200	500	8000
4B	-70	2200	500	8000
6B	-40	2200	500	8000
7B	+40	2200	500	8000
△1 30B	-1210	2400	1200	4000
31B	-978	2400	1200	5000
32B	-763	2400	1200	4000
△1 33B	-470	2400	1200	8000
36B	+40	2200	500	8000
37B	-40	2200	500	8000
39B	-70	2200	500	8000
40B	△2 +90	2200	500	8000
41B	-90	2200	500	8000

△1

Tendon No.	p
15B	-50
16B	-50
30B	+200

W2 CAP BEAM CONTINUITY TENDON TABLE-2 FOR "W" LINE

Tendon No.	h	L	e_5	R
2B	-40	2200	500	8000
3B	+40	2200	500	8000
4B	-70	2200	500	8000
6B	-40	2200	500	8000
7B	+40	2200	500	8000
△1 30B	-1285	-1285	1200	4000
31B	-1053	2400	1200	5000
32B	-795	2400	1200	5000
△1 33B	-515	2400	1200	8000
36B	+40	2200	500	8000
37B	-40	2200	500	8000
38B	+65	2200	500	8000 △2
△2 39B	-130	2200	500	8000
40B	+40	2200	500	8000
41B	-40	2200	500	8000

△1

Tendon No.	p
21B	+100
22B	+100
26B	-50
27B	-50
30B	-200
44	+1200

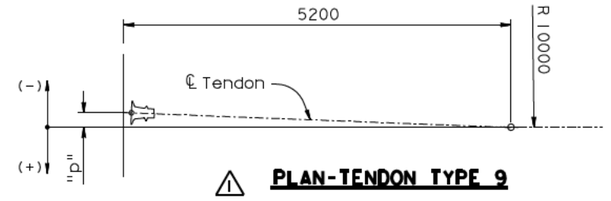

△1 **PLAN-TENDON TYPE 9**

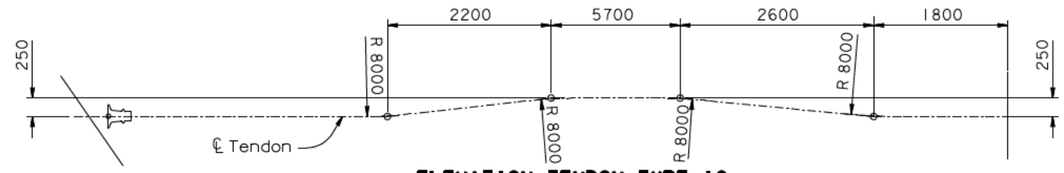

△1 **ELEVATION-TENDON TYPE 10**

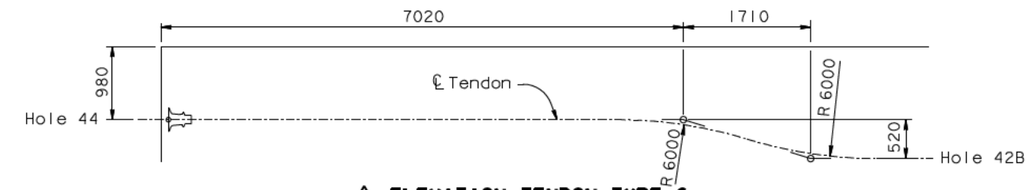

△1 **ELEVATION-TENDON TYPE 6**

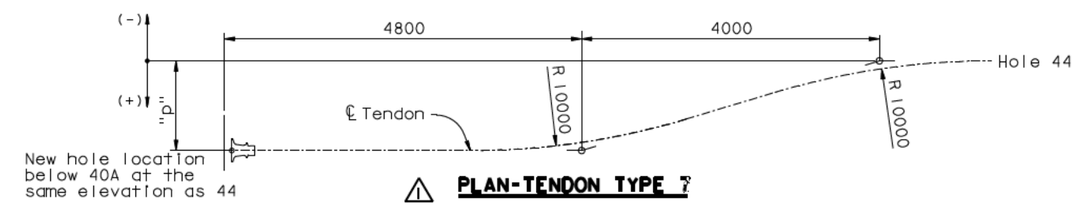

△1 **PLAN-TENDON TYPE 7**

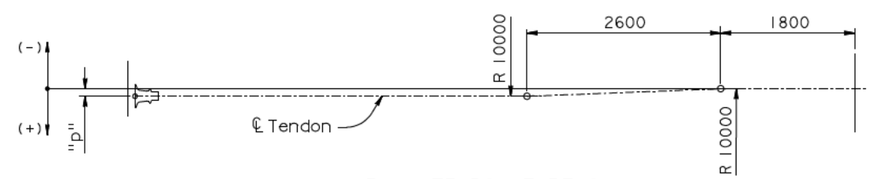

△1 **PLAN-TENDON TYPE 8**

REGISTERED PROFESSIONAL ENGINEER Charles P. Duxbury No. C 64677 Exp. 06/30/07 CIVIL STATE OF CALIFORNIA

FOR REVISIONS ONLY

NOTES:

1. For Type 1 through Type 5 tendon geometry, see "W2 Cap Beam Post-Tensioning Details No. 11" sheet.
2. For general stressing sequence, see "Pier W2 Construction Sequence" sheet.
3. For additional prestressing details, see "Prestressing Notes" sheet.

ALL DIMENSIONS ARE IN MILLIMETERS UNLESS OTHERWISE SHOWN

MARK	DATE	DESCRIPTIONS	BY	CH'D	CCO#
△2	01/31/07	CORROSION PROTECTION	JD	AS	16
△1	07/21/06	W2 CAP BEAM ISD	JD	NV	23

REVISIONS

CONTRACT CHANGE ORDER NO. ____
SHEET ___ OF ___

SAN FRANCISCO OAKLAND BAY BRIDGE
EAST SPAN SEISMIC SAFETY PROJECT
SELF-ANCHORED SUSPENSION BRIDGE
(SUPERSTRUCTURE & TOWER)

W2 CAP BEAM POST-TENSIONING DETAILS NO. 12

R. Valizadeh/V. Toan/Y.L./W.L./F.C.
DESIGN OVERSIGHT
SIGN OFF DATE 01/31/07

	BY	CHECKED
DESIGN	J. Sun	M. Chen
DETAILS	J. Duxbury	M. Chen
QUANTITIES	S. Shi	D. Harrison

PREPARED FOR THE STATE OF CALIFORNIA DEPARTMENT OF TRANSPORTATION

R. Manzanarez
PROJECT ENGINEER

BRIDGE NO. 34-0006L/R
KILOMETER POST 13.2/13.9

CU 04
EA 0120F1

Rev. Date: 5-18-98

ORIGINAL SCALE IN MILLIMETERS FOR REDUCED PLANS 0 10 20 30 40 50 60 70 80 90 100

DISREGARD PRINTS BEARING EARLIER REVISION DATES → 05/31/01 04/26/02 07/24/02 12/19/02

SHEET 056R2 OF

FILE -> I:\bb\04-012001\sas\contract plans and cco\cco\in progress\cco#16\aecpt12.dgn

100 % PS&E

DATE PLOTTED => 15 MAR 2007 TIME PLOTTED => 15:30:33

USERNAME => visitor

DIST.	COUNTY	ROUTE	KILOMETER POST TOTAL PROJECT	SHEET NO.	TOTAL SHEETS
04	SF	80	13.2/13.9	499R2	1204

REGISTERED ENGINEER - CIVIL

12-6-04
PLANS APPROVAL DATE

REGISTERED PROFESSIONAL ENGINEER John Sun No. C 54648 Exp. 12/31/05 CIVIL STATE OF CALIFORNIA

The State of California or its officers or agents shall not be responsible for the accuracy or completeness of electronic copies of this plan sheet.

T.Y. LIN / MOFFATT & NICHOL
825 BATTERY STREET
SAN FRANCISCO, CA 94111

Caltrans now has a web site! To get to the web site, go to: http://www.dot.ca.gov

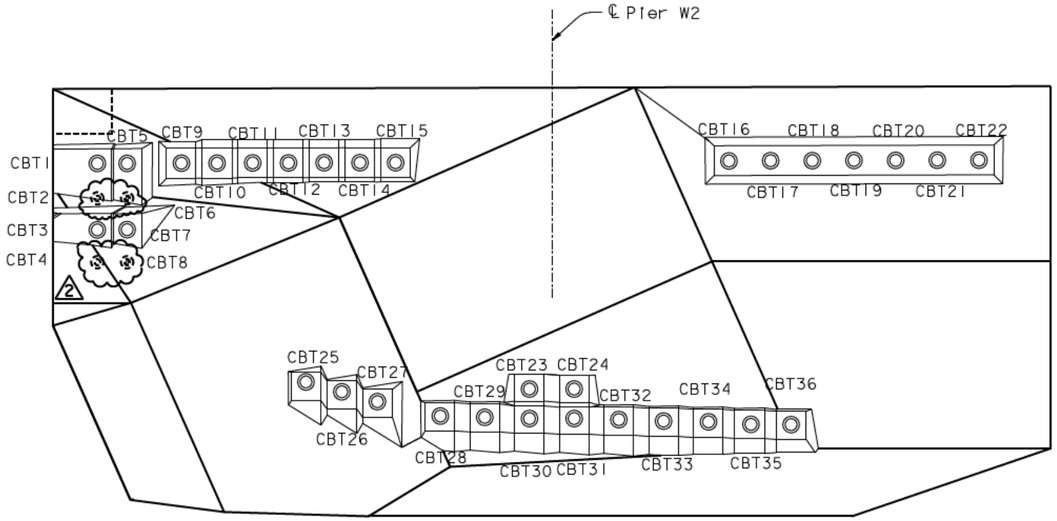

⚠1 **ELEVATION** (Cap beam transverse PT tendons)
1:50

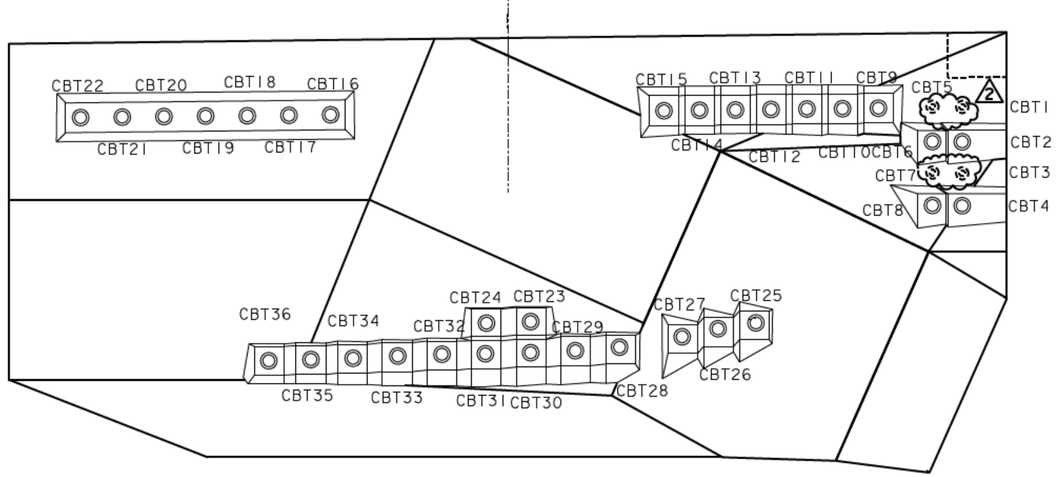

⚠1 **ELEVATION** (Cap beam transverse PT tendons)
1:50

CAP BEAM TRANSVERSE PT TENDON BLOCKOUT TABLE

South face		North face	
Tendon	Blockout Detail	Tendon	Blockout Detail
CBT1	R	CBT1	S
CBT2	R	CBT2	S
CBT3	R	CBT3	S
CBT4	R	CBT4	S
CBT5	R	CBT5	S
CBT6	R	CBT6	S
CBT7	R	CBT7	S
CBT8	R	CBT8	S
CBT9	J	CBT9	J
CBT10	J	CBT10	J
CBT11	K	CBT11	K
CBT12	K	CBT12	K
CBT13	K	CBT13	K
CBT14	K	CBT14	K
CBT15	K	CBT15	K
CBT16	L	CBT16	L
CBT17	L	CBT17	L
CBT18	L	CBT18	L
CBT19	L	CBT19	L
CBT20	L	CBT20	L
CBT21	L	CBT21	L
CBT22	L	CBT22	L
CBT23	P	CBT23	P
CBT24	P	CBT24	P
CBT25	M	CBT25	M
CBT26	M	CBT26	M
CBT27	M	CBT27	M
CBT28	N	CBT28	N
CBT29	N	CBT29	N
CBT30	P	CBT30	P
CBT31	P	CBT31	P
CBT32	N	CBT32	N
CBT33	N	CBT33	N
CBT34	N	CBT34	N
CBT35	N	CBT35	N
CBT36	Q	CBT36	Q

REGISTERED PROFESSIONAL ENGINEER James P. Duxbury No. C 64677 Exp. 06/30/07 CIVIL STATE OF CALIFORNIA

FOR REVISIONS ONLY

MARK	DATE	DESCRIPTIONS	BY	CH'D	CCO#
2	01/31/07	CORROSION PROTECTION	JD	AS	16
1	07/21/06	W2 CAP BEAM ISD	JD	NV	23

REVISIONS

CONTRACT CHANGE ORDER NO. ____
SHEET ___ OF ___

NOTES:

1. For Details J through L, see "W2 Cap Beam Blockout Details No.6" sheet.
2. For Details M and N, see "W2 Cap Beam Blockout Details No.7" sheet.
3. For Details P and Q, see "W2 Cap Beam Blockout Details No.8" sheet.
4. For Detail R, see "W2 Cap Beam Blockout Details No.9" sheet.
5. For Detail S, see "W2 Cap Beam Blockout Details No.10" sheet.
6. For additional prestressing details, see "Prestressing Notes" sheet.

100 % PS&E

DATE PLOTTED => 15 MAR 2007 TIME PLOTTED => 15:32:24

USERNAME => vistor

ALL DIMENSIONS ARE IN MILLIMETERS UNLESS OTHERWISE SHOWN

R. Vaizadeh/V. Toan/Y.L./W.L./F.C.
DESIGN OVERSIGHT
SIGN OFF DATE 01/31/07

Rev. Date: 5-18-98

DESIGN	BY J. Sun	CHECKED M. Chen	
DETAILS	BY J. Duxbury	CHECKED M. Chen	
QUANTITIES	BY S. Shi	CHECKED D. Harrison	

PREPARED FOR THE STATE OF CALIFORNIA DEPARTMENT OF TRANSPORTATION

R. Manzanarez
PROJECT ENGINEER

BRIDGE NO. 34-0006L/R
KILOMETER POST 13.2/13.9

SAN FRANCISCO OAKLAND BAY BRIDGE
EAST SPAN SEISMIC SAFETY PROJECT
SELF-ANCHORED SUSPENSION BRIDGE
(SUPERSTRUCTURE & TOWER)

W2 CAP BEAM BLOCKOUT DETAILS NO. 2

ORIGINAL SCALE IN MILLIMETERS FOR REDUCED PLANS 0 10 20 30 40 50 60 70 80 90 100

CU 04
EA 0120F1

DISREGARD PRINTS BEARING EARLIER REVISION DATES

REVISION DATES (PRELIMINARY STAGE ONLY) 08/02/99 05/31/01 04/08/02 07/08/02 12/19/02

SHEET 82R2 OF

FILE -> I:\bb\04-012001\sas\contract plans and cco\cco\In progress\cco#16\aecbb02.dgn

DIST.	COUNTY	ROUTE	KILOMETER POST TOTAL PROJECT	SHEET NO.	TOTAL SHEETS
04	SF	80	13.2/13.9	506R2	1204

Caltrans Metric

REGISTERED ENGINEER - CIVIL

12-6-04
PLANS APPROVAL DATE

REGISTERED PROFESSIONAL ENGINEER John Sun No. C 54648 Exp. 12/31/05 CIVIL STATE OF CALIFORNIA

The State of California or its officers or agents shall not be responsible for the accuracy or completeness of electronic copies of this plan sheet.

T.Y. LIN / MOFFATT & NICHOL
825 BATTERY STREET
SAN FRANCISCO, CA 94111

Caltrans now has a web site! To get to the web site, go to: http://www.dot.ca.gov

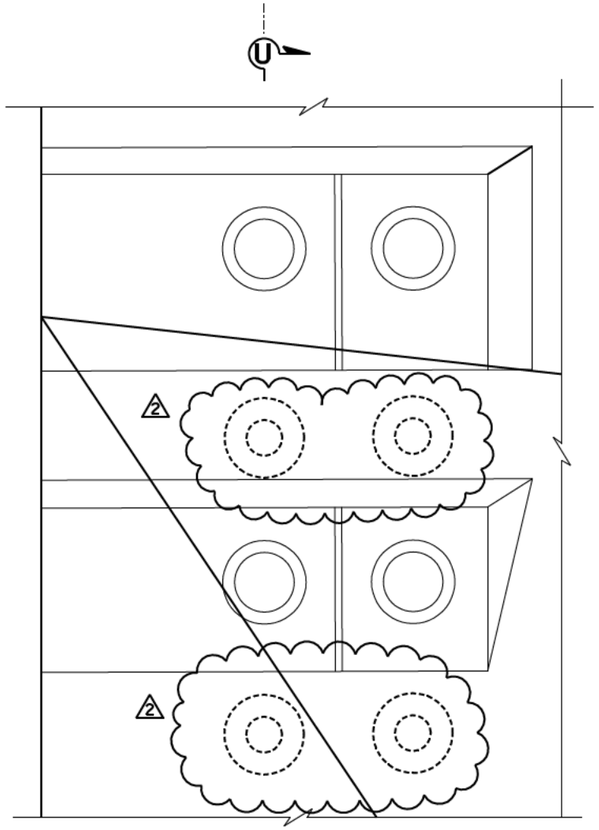

DETAIL R
1:10

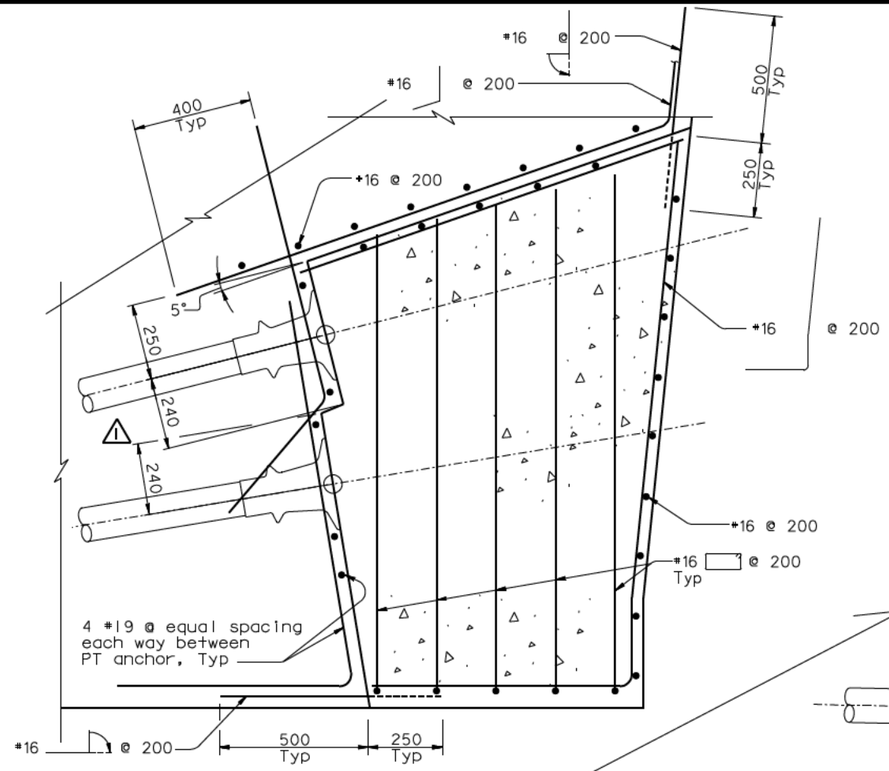

SECTION V-V
1:10

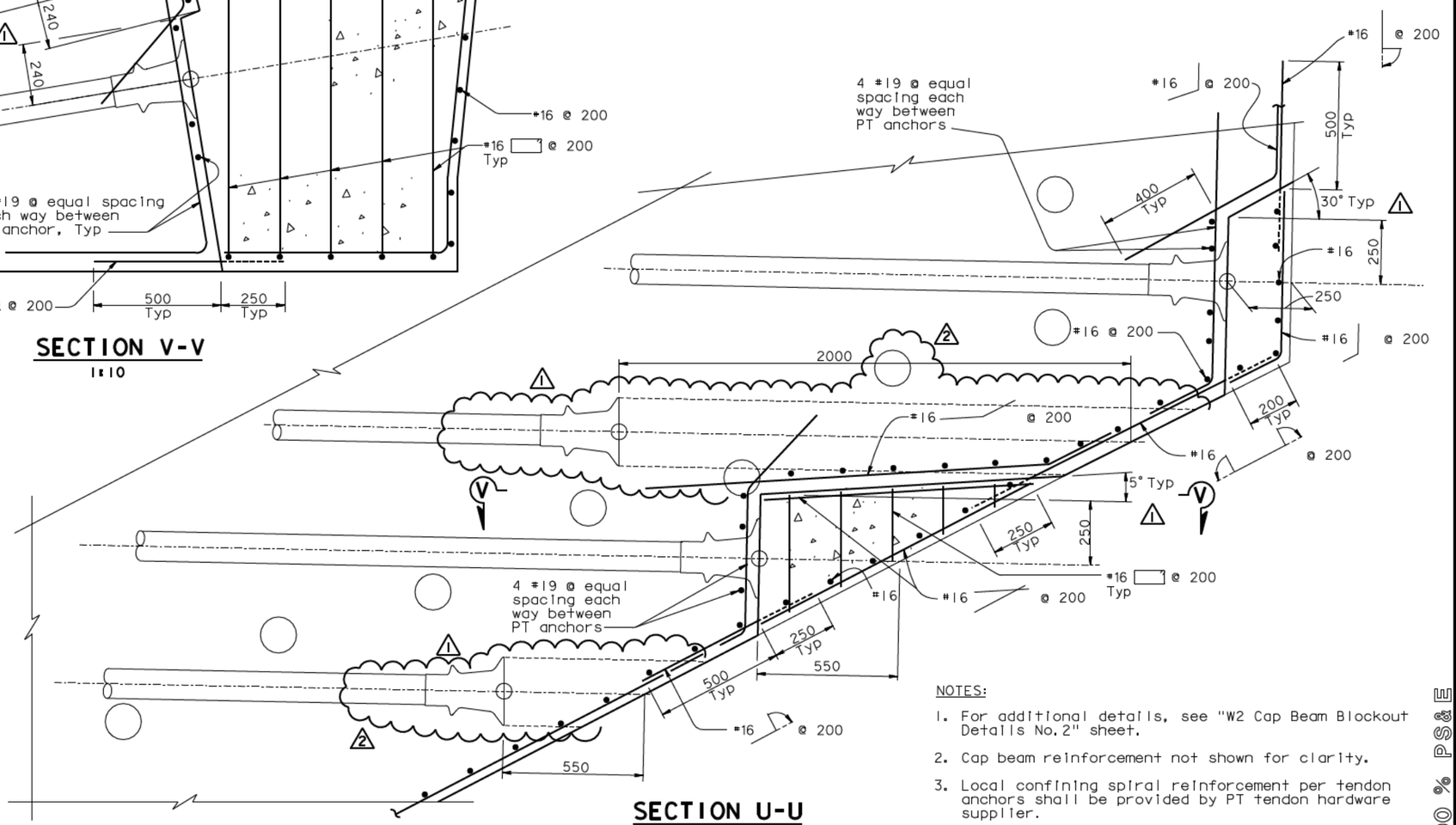

SECTION U-U
1:10

NOTES:

1. For additional details, see "W2 Cap Beam Blockout Details No. 2" sheet.
2. Cap beam reinforcement not shown for clarity.
3. Local confining spiral reinforcement per tendon anchors shall be provided by PT tendon hardware supplier.

REGISTERED PROFESSIONAL ENGINEER James P. Duxbury No. C 64677 Exp. 06/30/07 CIVIL STATE OF CALIFORNIA

FOR REVISIONS ONLY

MARK	DATE	DESCRIPTIONS	BY	CH'D	CCO#
2	01/31/07	CORROSION PROTECTION	JD	NV	16
1	07/21/06	W2 CAP BEAM ISD	JD	NV	23

REVISIONS

CONTRACT CHANGE ORDER NO. _____
SHEET ____ OF ____

ALL DIMENSIONS ARE IN MILLIMETERS UNLESS OTHERWISE SHOWN

SAN FRANCISCO OAKLAND BAY BRIDGE
EAST SPAN SEISMIC SAFETY PROJECT
SELF-ANCHORED SUSPENSION BRIDGE
(SUPERSTRUCTURE & TOWER)

W2 CAP BEAM BLOCKOUT DETAILS NO. 9

R. Valizadeh/V. Toan/Y.L./W.L./F.C.
DESIGN OVERSIGHT
Roger Valizadeh / Vong Toan / Y Liu
SIGN OFF DATE 01/31/07

	BY	CHECKED
DESIGN	J. Sun	M. Chen
DETAILS	J. Duxbury	M. Chen
QUANTITIES	S. Shi	D. Harrison

PREPARED FOR THE STATE OF CALIFORNIA DEPARTMENT OF TRANSPORTATION

R. Manzanarez
PROJECT ENGINEER

BRIDGE NO. 34-0006L/R
KILOMETER POST 13.2/13.9

Rev. Date: 5-18-98

ORIGINAL SCALE IN MILLIMETERS FOR REDUCED PLANS 0 10 20 30 40 50 60 70 80 90 100

CU 04
EA 0120F1

DISREGARD PRINTS BEARING EARLIER REVISION DATES

REVISION DATES (PRELIMINARY STAGE ONLY) 05/31/01 04/08/02 07/01/02 12/19/02

SHEET 89R2 OF

FILE -> I:\bb\04-012001\sas\contract plans and cco\cco\in progress\cco#16\aecbb09.dgn

100 % PS&E

USERNAME => visitor DATE PLOTTED => 15 MAR 2007 TIME PLOTTED => 15:33:45

DIST.	COUNTY	ROUTE	KILOMETER POST TOTAL PROJECT	SHEET NO.	TOTAL SHEETS
04	SF	80	13.2/13.9	507R2	1204

Caltrans Metric

REGISTERED ENGINEER - CIVIL

12-6-04
PLANS APPROVAL DATE

REGISTERED PROFESSIONAL ENGINEER John Sun No. C 54648 Exp. 12/31/05 CIVIL STATE OF CALIFORNIA

The State of California or its officers or agents shall not be responsible for the accuracy or completeness of electronic copies of this plan sheet.

T.Y. LIN / MOFFATT & NICHOL
825 BATTERY STREET
SAN FRANCISCO, CA 94111

Caltrans now has a web site! To get to the web site, go to: http://www.dot.ca.gov

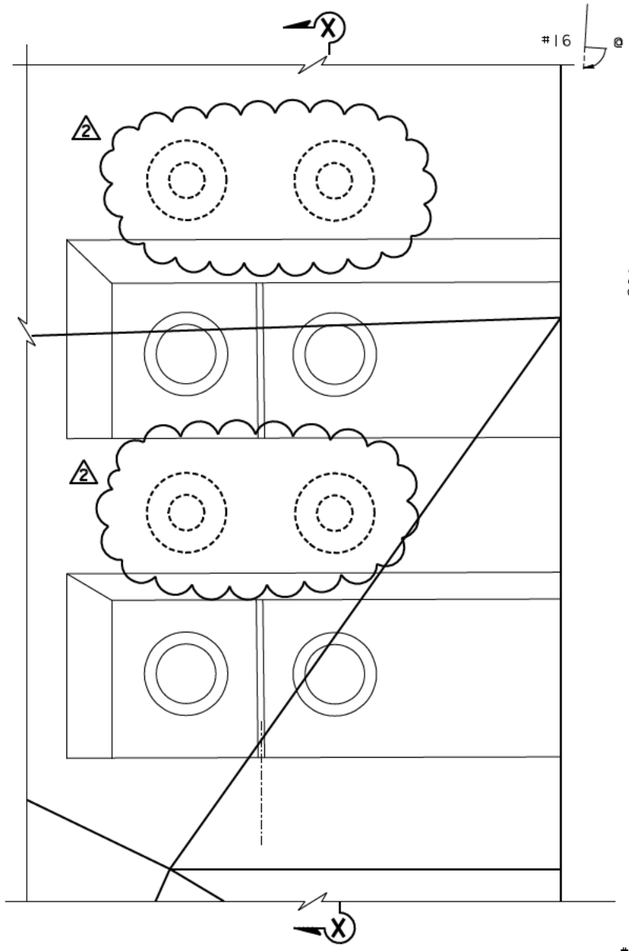

⚠1 DETAIL S
1:10

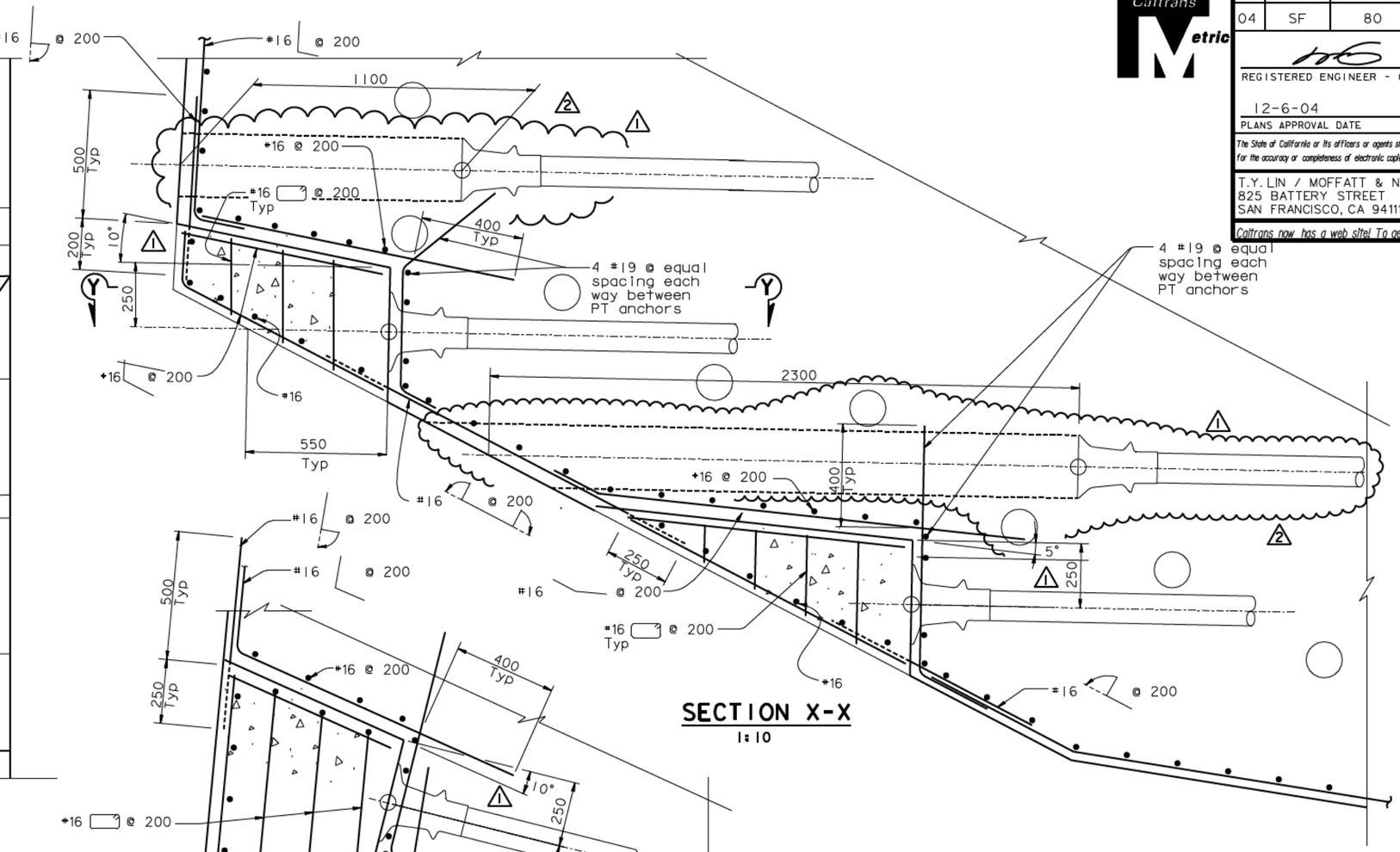

SECTION X-X
1:10

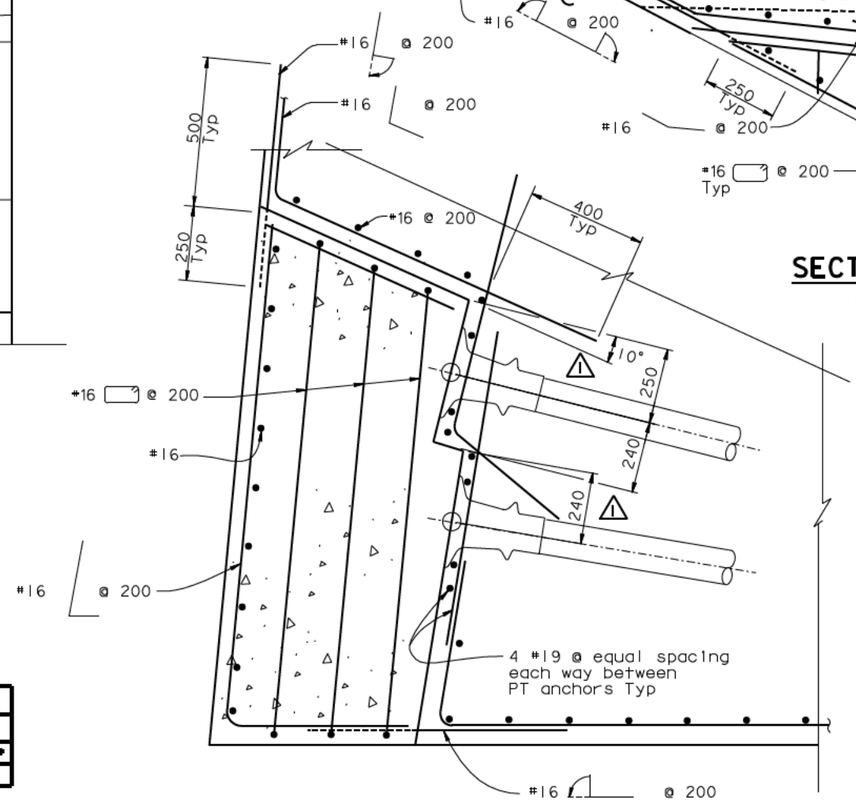

SECTION Y-Y
1:10

NOTES:

1. For additional details, see "W2 Cap Beam Blockout Details No.2" sheet.
2. Cap beam reinforcement not shown for clarity.
3. Local confining spiral reinforcement per tendon anchors shall be provided by PT tendon hardware supplier.

REGISTERED PROFESSIONAL ENGINEER John P. Duxbury No. C 64677 Exp. 06/30/07 CIVIL STATE OF CALIFORNIA

FOR REVISIONS ONLY

MARK	DATE	DESCRIPTIONS	BY	CH'D	CCO#
2	01/31/07	CORROSION PROTECTION	JD	AS	16
1	07/21/06	W2 CAP BEAM ISD	JD	NV	23

REVISIONS

CONTRACT CHANGE ORDER NO. ____
SHEET ___ OF ___

ALL DIMENSIONS ARE IN MILLIMETERS UNLESS OTHERWISE SHOWN

R. Valizadeh/V. Toan/Y.L./W.L./F.C.
DESIGN OVERSIGHT
SIGN OFF DATE 01/31/07

	BY	CHECKED
DESIGN	J. Sun	M. Chen
DETAILS	J. Duxbury	M. Chen
QUANTITIES	S. Shi	D. Harrison

PREPARED FOR THE STATE OF CALIFORNIA DEPARTMENT OF TRANSPORTATION

R. Manzanarez
PROJECT ENGINEER

BRIDGE NO. 34-0006L/R
KILOMETER POST 13.2/13.9

SAN FRANCISCO OAKLAND BAY BRIDGE
EAST SPAN SEISMIC SAFETY PROJECT
SELF-ANCHORED SUSPENSION BRIDGE
(SUPERSTRUCTURE & TOWER)

W2 CAP BEAM BLOCKOUT DETAILS NO. 10

Rev. Date: 5-18-98

ORIGINAL SCALE IN MILLIMETERS FOR REDUCED PLANS 0 10 20 30 40 50 60 70 80 90 100

CU 04
EA 0120F1

DISREGARD PRINTS BEARING EARLIER REVISION DATES

REVISION DATES (PRELIMINARY STAGE ONLY) 05/24/01 04/08/02 07/09/02 12/19/02

SHEET 90R2 OF

FILE -> I:\bb\04-012001\sas\contract plans and cco\cco\in progress\cco#16\aecbb10.dgn

100 % PS&E

DATE PLOTTED => 15 MAR 2007 TIME PLOTTED => 15:34:45

USERNAME => visitor

DIST.	COUNTY	ROUTE	KILOMETER POST TOTAL PROJECT	SHEET NO.	TOTAL SHEETS
04	SF	80	13.2/13.9	508R2	1204

Caltrans Metric

REGISTERED ENGINEER - CIVIL

12-6-04
PLANS APPROVAL DATE

REGISTERED PROFESSIONAL ENGINEER John Sun No. C 54648 Exp. 12/31/05 CIVIL STATE OF CALIFORNIA

The State of California or its officers or agents shall not be responsible for the accuracy or completeness of electronic copies of this plan sheet.

T.Y. LIN / MOFFATT & NICHOL
825 BATTERY STREET
SAN FRANCISCO, CA 94111

Caltrans now has a web site! To get to the web site, go to: http://www.dot.ca.gov

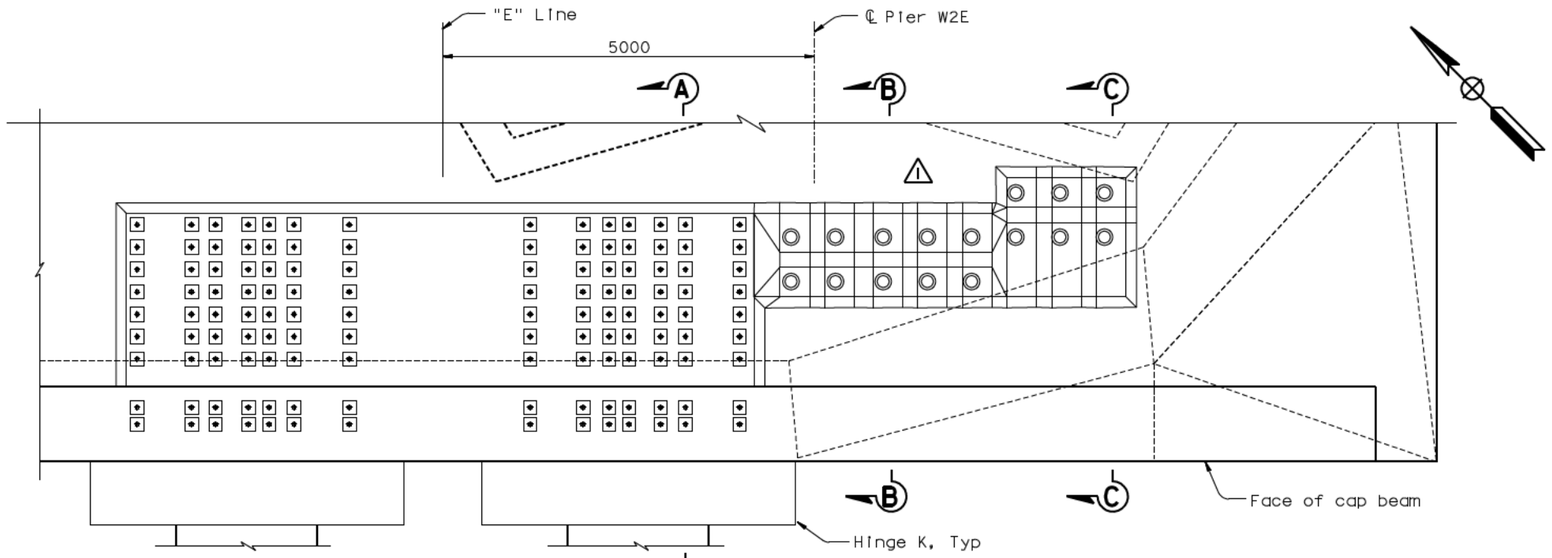

PLAN
1:40
(36 Dia post-tension rod and 12-15 Dia strand tendon blockouts)

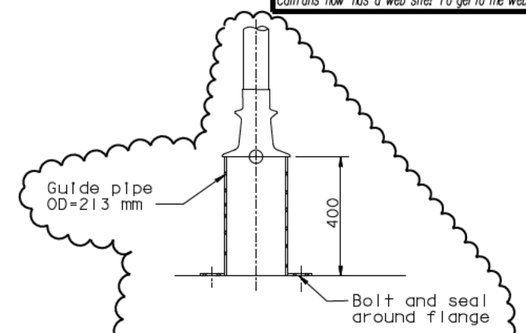

DEAD END GUIDE PIPE
NTS (see Note 6)

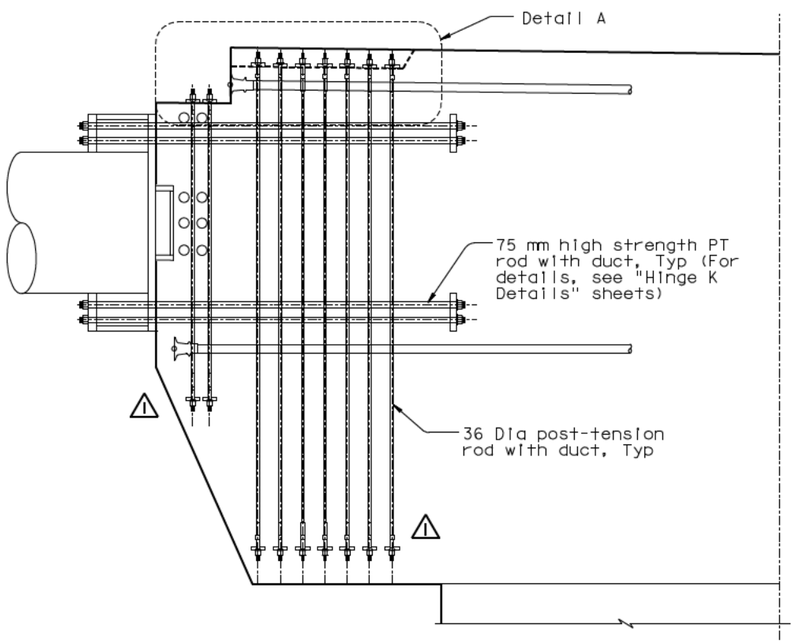

SECTION A-A
1:40

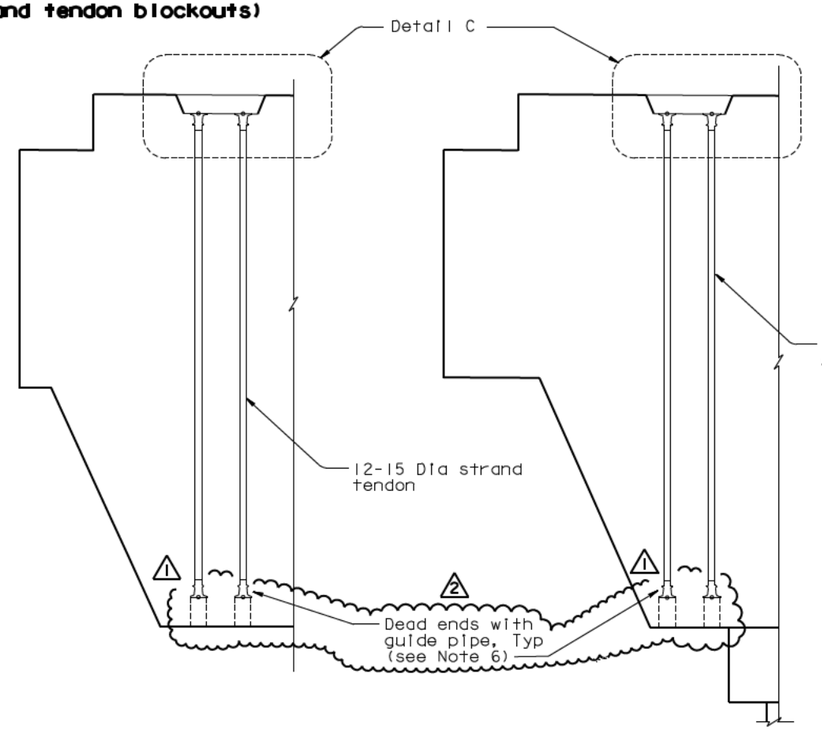

SECTION B-B
1:40

SECTION C-C
1:40

ALL DIMENSIONS ARE IN MILLIMETERS UNLESS OTHERWISE SHOWN

NOTES:
1. Cap beam reinforcement not shown for clarity.
2. Local confining spiral reinforcement for tendon anchors shall be provided by PT tendon hardware supplier.
3. Blockouts on the cap beam "E" Line shown, blockouts on the cap beam "W" Line similar.
4. For Details A and C, see "W2 Cap Beam Blockout Details No. 12" sheet.
5. For additional prestressing details, see "Prestressing Notes" sheet.
6. Contractor shall coordinate the dead end guide pipe details with the PT Supplier and shall submit them to the Engineer for review and approval. Contractor shall grout the guide pipe after stressing operations have been completed.

REGISTERED PROFESSIONAL ENGINEER James P. Duxbury No. C 64677 Exp. 06/30/07 CIVIL STATE OF CALIFORNIA

FOR REVISIONS ONLY

MARK	DATE	DESCRIPTIONS	BY	CH'D	CCO#
2	01/31/07	CORROSION PROTECTION	JD	AS	16
1	07/21/06	W2 CAP BEAM ISD	JD	NV	23

REVISIONS

CONTRACT CHANGE ORDER NO. ____
SHEET ___ OF ___

100 % PS&E

SAN FRANCISCO OAKLAND BAY BRIDGE
EAST SPAN SEISMIC SAFETY PROJECT
SELF-ANCHORED SUSPENSION BRIDGE
(SUPERSTRUCTURE & TOWER)

W2 CAP BEAM BLOCKOUT DETAILS NO. 11

R. Valizadeh/V. Toan/Y.L./W.L./F.C.
DESIGN OVERSIGHT
SIGN OFF DATE 01/31/07

	BY	CHECKED
DESIGN	J. Sun	M. Chen
DETAILS	J. Duxbury	M. Chen
QUANTITIES	S. Shi	D. Harrison

PREPARED FOR THE STATE OF CALIFORNIA DEPARTMENT OF TRANSPORTATION

R. Manzanarez
PROJECT ENGINEER

BRIDGE NO. 34-0006L/R
KILOMETER POST 13.2/13.9

Rev. Date: 5-18-98

ORIGINAL SCALE IN MILLIMETERS FOR REDUCED PLANS 0 10 20 30 40 50 60 70 80 90 100

CU 04
EA 0120F1

DISREGARD PRINTS BEARING EARLIER REVISION DATES 05/31/01 01/08/02 07/09/02 12/19/02

SHEET 91R2 OF

FILE -> I:\bb\04-012001\sas\contract plans and cco\cco\in progress\cco#16\aecbb11.dgn

USERNAME => visitor DATE PLOTTED => 15 MAR 2007 TIME PLOTTED => 15:35:58

DIST.	COUNTY	ROUTE	KILOMETER POST TOTAL PROJECT	SHEET NO.	TOTAL SHEETS
04	SF	80	13.2/13.9	509R2	1204

Caltrans Metric

REGISTERED ENGINEER - CIVIL

12-6-04
PLANS APPROVAL DATE

REGISTERED PROFESSIONAL ENGINEER John Sun No. C 54648 Exp. 12/31/05 CIVIL STATE OF CALIFORNIA

The State of California or its officers or agents shall not be responsible for the accuracy or completeness of electronic copies of this plan sheet.

T.Y. LIN / MOFFATT & NICHOL
825 BATTERY STREET
SAN FRANCISCO, CA 94111

Caltrans now has a web site! To get to the web site, go to: http://www.dot.ca.gov

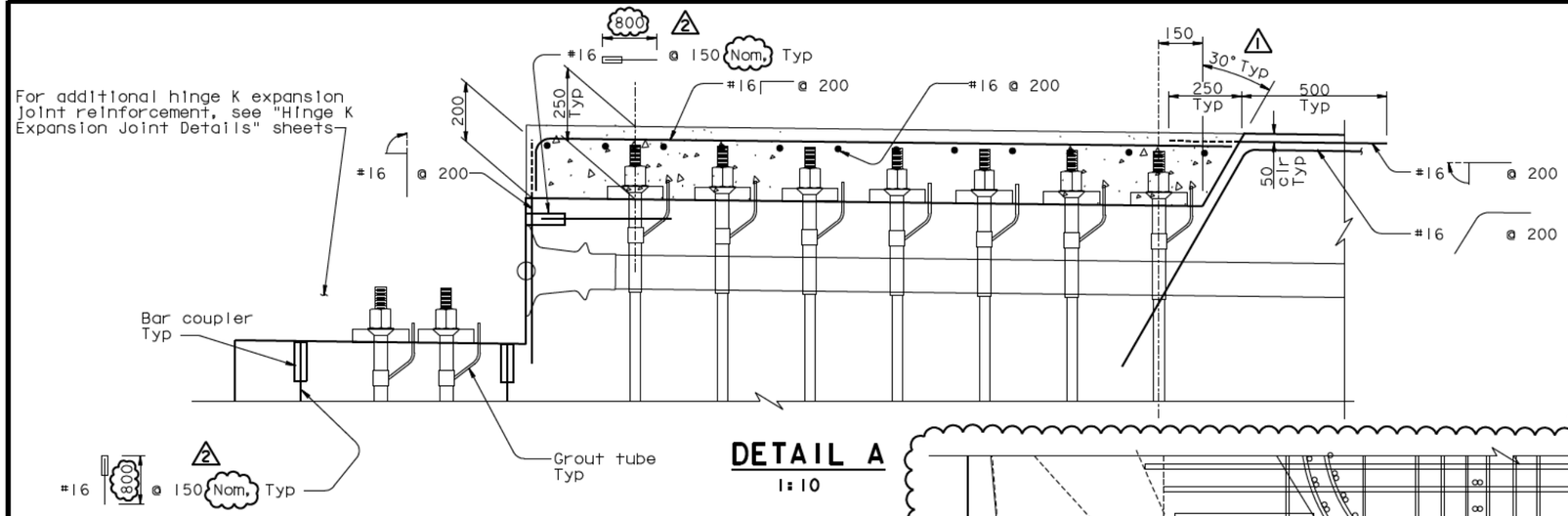

DETAIL A
1:10

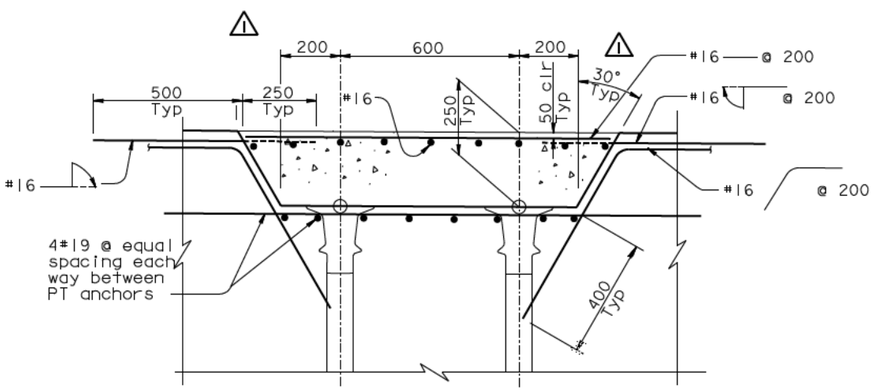

DETAIL C
1:10

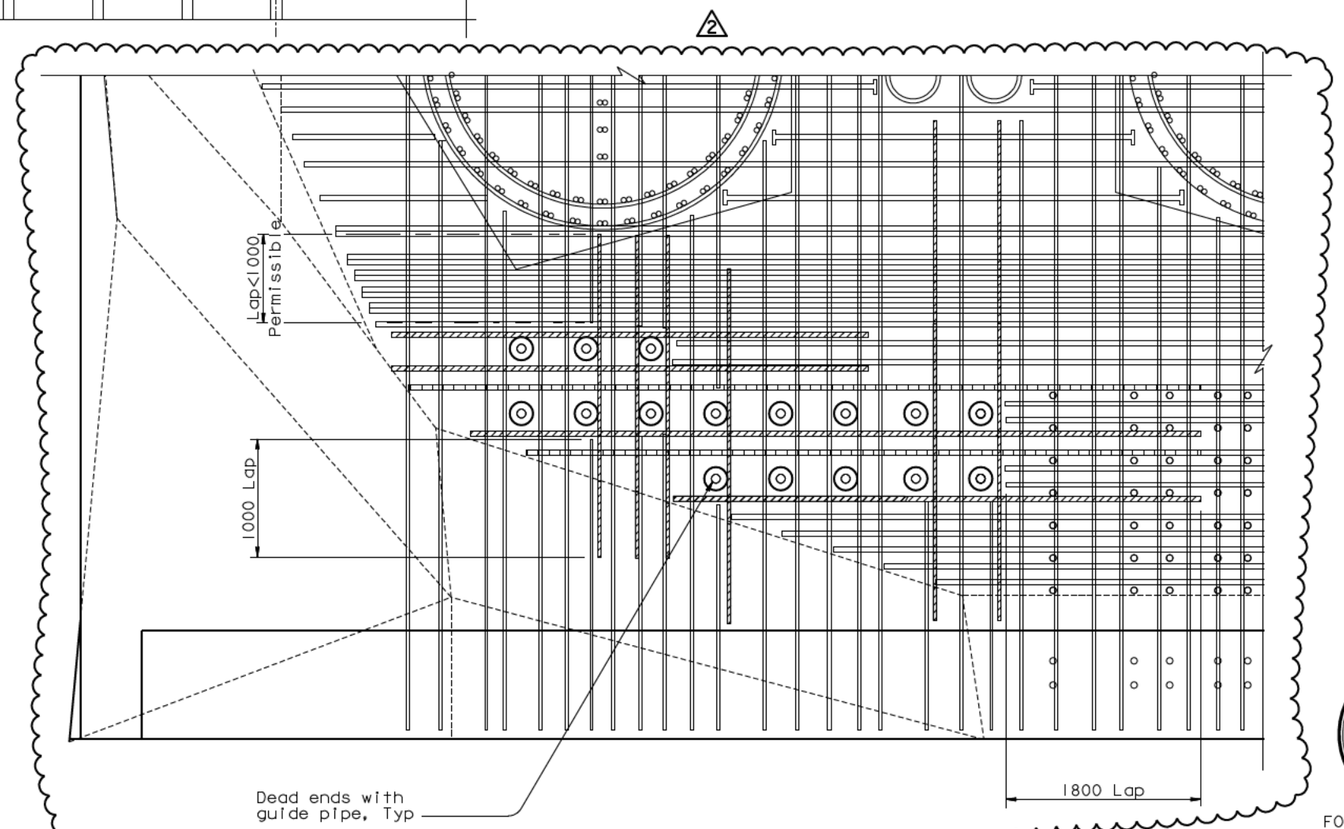

DEAD END GUIDE PIPE BOTTOM MAT REINFORCEMENT ALTERNATE
NTS

NOTES:

1. For additional details, see "W2 Cap Beam Blockout Details No. 11" sheet.
2. Cap beam reinforcement not shown for clarity.
3. Local confining spiral reinforcement per tendon anchors shall be provided by PT tendon hardware supplier.

REGISTERED PROFESSIONAL ENGINEER James P. Duxbury No. C 64677 Exp. 06/30/07 CIVIL STATE OF CALIFORNIA

FOR REVISIONS ONLY

MARK	DATE	DESCRIPTIONS	BY	CH'D	CCO#
2	01/31/07	CORROSION PROTECTION	JD	AS	16
1	07/21/06	W2 CAP BEAM ISD	JD	NV	23

REVISIONS

CONTRACT CHANGE ORDER NO. ____
SHEET ___ OF ___

ALL DIMENSIONS ARE IN MILLIMETERS UNLESS OTHERWISE SHOWN

SAN FRANCISCO OAKLAND BAY BRIDGE
EAST SPAN SEISMIC SAFETY PROJECT
SELF-ANCHORED SUSPENSION BRIDGE
(SUPERSTRUCTURE & TOWER)

W2 CAP BEAM BLOCKOUT DETAILS NO. 12

R. Valizadeh/V. Toan/Y.L./W.L./F.C.
DESIGN OVERSIGHT
SIGN OFF DATE 01/31/07

	BY	CHECKED
DESIGN	J. Sun	M. Chen
DETAILS	J. Duxbury	M. Chen
QUANTITIES	S. Shi	D. Harrison

PREPARED FOR THE STATE OF CALIFORNIA DEPARTMENT OF TRANSPORTATION

R. Manzanarez
PROJECT ENGINEER

BRIDGE NO. 34-0006L/R
KILOMETER POST 13.2/13.9

Rev. Date: 5-18-98

ORIGINAL SCALE IN MILLIMETERS FOR REDUCED PLANS 0 10 20 30 40 50 60 70 80 90 100

CU 04
EA 0120F1

DISREGARD PRINTS BEARING EARLIER REVISION DATES

REVISION DATES (PRELIMINARY STAGE ONLY) 05/24/01 04/08/02 07/08/02 12/19/02

SHEET 92R2 OF

FILE -> I:\bb\04-012001\sas\contract plans and cco\cco\in progress\cco#16\aecbb12.dgn

USERNAME => visitor DATE PLOTTED => 15 MAR 2007 TIME PLOTTED => 15:37:14

100 % PS&E

MARK	DATE	DESCRIPTIONS	BY	CH'D	CCO#
2	01/31/07	CORROSION PROTECTION	JD	AS	16
1	01/21/06	W2 CAP BEAM ISD	JD	NV	23

REVISIONS

CONTRACT CHANGE ORDER NO. 16
SHEET 2 OF 12

Caltrans now has a web site! To get to the web site, go to: http://www.dot.ca.gov

DIST.	COUNTY	ROUTE	KILOMETER POST TOTAL PROJECT	SHEET NO.	TOTAL SHEETS
04	SF	80	13.2/13.9	462R2	1204

REGISTERED ENGINEER - CIVIL
12-6-04
PLANS APPROVAL DATE

The State of California or its officers or agents shall not be responsible for the accuracy or completeness of electronic copies of this plan sheet.

REGISTERED PROFESSIONAL ENGINEER James P. Duxbury No. C 64677 Exp. 06/30/07 CIVIL STATE OF CALIFORNIA

REGISTERED PROFESSIONAL ENGINEER John Sun No. C 54648 Exp. 12/31/05 CIVIL STATE OF CALIFORNIA

T.Y. LIN / MOFFATT & NICHOL
825 BATTERY STREET
SAN FRANCISCO, CA 94111

Caltrans Metric

FOR REVISIONS ONLY

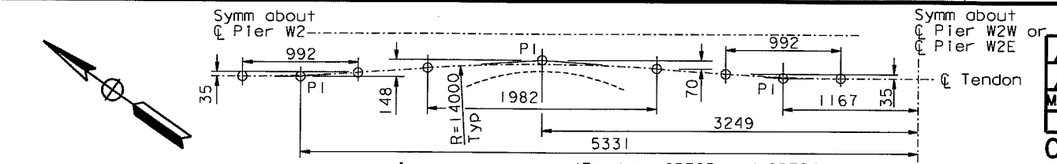

DETAIL A'
(Tendons CBT23 and CBT24)
(Tendons CBT30 and CBT31)
1:25

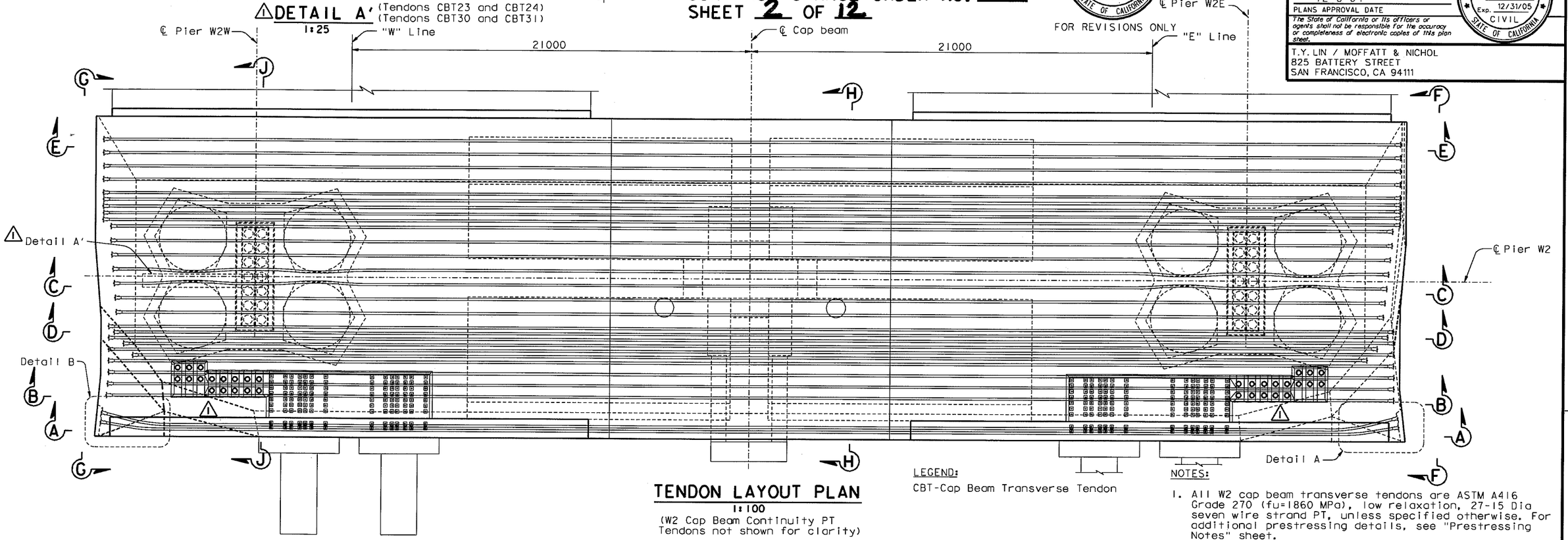

TENDON LAYOUT PLAN
1:100
(W2 Cap Beam Continuity PT Tendons not shown for clarity)

LEGEND:
CBT-Cap Beam Transverse Tendon

NOTES:

1. All W2 cap beam transverse tendons are ASTM A416 Grade 270 (fu=1860 MPa), low relaxation, 27-15 Dia seven wire strand PT, unless specified otherwise. For additional prestressing details, see "Prestressing Notes" sheet.
2. For Section A-A, see "W2 Cap Beam Post-Tensioning Details No.2" sheet.
3. For Sections B-B through E-E, see "W2 Cap Beam Post-Tensioning Details No.3" sheet.
4. For Sections F-F through J-J, see "W2 Cap Beam Post-Tensioning Details No.4" sheet.
5. For bikepath details near cap beam, see "Bikepath Details" sheets.
6. For PT blockout dimensions, see "W2 Cap Beam Blockout Details" sheets.
7. Jacking force in the W2 cap beam transverse tendons (CBT1-CBT36) shall be 5265 kN typical.
8. For general stressing sequence, see "Pier W2 Construction Sequence" sheet.
9. For "W2 Cap Beam Post-Tensioning Details" sheets, the Contractor shall verify all controlling field dimensions before ordering or fabricating any material.
10. W2 cap beam elevations are to top of finished concrete and do not include overlay thickness.

ALL DIMENSIONS ARE IN MILLIMETERS UNLESS OTHERWISE SHOWN

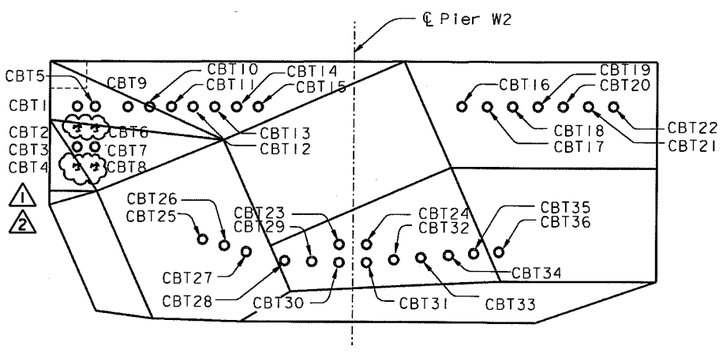

TENDON DESIGNATION
1:80

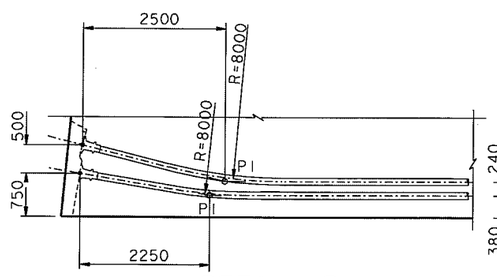

DETAIL B
1:50
(Tendons CBT1 and CBT5)
(Tendons CBT2 thru CBT8 similar)

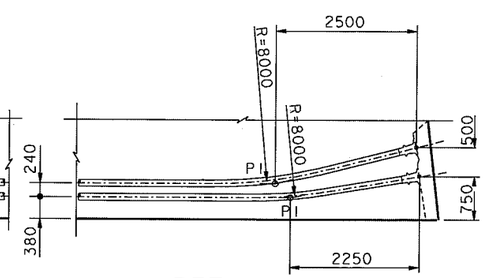

DETAIL A
1:50
(Tendons CBT1 and CBT5)
(Tendons CBT2 thru CBT8 similar)

100 % PS&E

DATE PLOTTED => 15 MAR 2007 TIME PLOTTED => 15:21:43

USERNAME => Visitor

SAN FRANCISCO OAKLAND BAY BRIDGE
EAST SPAN SEISMIC SAFETY PROJECT
SELF-ANCHORED SUSPENSION BRIDGE
(SUPERSTRUCTURE & TOWER)

W2 CAP BEAM POST-TENSIONING DETAILS NO. 1

R. Vaziadeh/V. Toan/Y.L./W.L./F.C.
DESIGN OVERSIGHT
SIGN OFF DATE 01/31/07

	BY	CHECKED
DESIGN	J. Sun	M. Chen
DETAILS	J. Duxbury	M. Chen
QUANTITIES	S. Shi	D. Harrison

PREPARED FOR THE STATE OF CALIFORNIA DEPARTMENT OF TRANSPORTATION

R. Manzanarez
PROJECT ENGINEER

BRIDGE NO. 34-0006L/R
KILOMETER POST 13.2/13.9

CU 04
EA 0120F1

Rev. Date: 5-18-98

ORIGINAL SCALE IN MILLIMETERS FOR REDUCED PLANS 0 10 20 30 40 50 60 70 80 90 100

DISREGARD PRINTS BEARING EARLIER REVISION DATES

REVISION DATES (PRELIMINARY STAGE ONLY) 08/08/99 05/31/01 04/08/02 07/05/02 12/19/02

SHEET 045R2 OF

FILE => I:\bb\04-012001\sas\contract plans and cco\cco\in progress\cco#16\aecpt01.dgn

DIST.	COUNTY	ROUTE	KILOMETER POST TOTAL PROJECT	SHEET NO.	TOTAL SHEETS
04	SF	80	13.2/13.9	463R2	1204

REGISTERED ENGINEER - CIVIL

12-6-04
PLANS APPROVAL DATE

REGISTERED PROFESSIONAL ENGINEER John Sun No. C 54648 Exp. 12/31/05 CIVIL STATE OF CALIFORNIA

The State of California or its officers or agents shall not be responsible for the accuracy or completeness of electronic copies of this plan sheet.

T.Y. LIN / MOFFATT & NICHOL
825 BATTERY STREET
SAN FRANCISCO, CA 94111

Caltrans now has a web site! To get to the web site, go to: http://www.dot.ca.gov

REGISTERED PROFESSIONAL ENGINEER Jackie P. Duxbury No. C 64677 Exp. 06/30/07 CIVIL STATE OF CALIFORNIA

FOR REVISIONS ONLY

MARK	DATE	DESCRIPTIONS	BY	CH'D	CCO#
2	01/31/07	CORROSION PROTECTION	JD	AS	16
1	07/21/06	W2 CAP BEAM ISD	JD	NV	23

REVISIONS

CONTRACT CHANGE ORDER NO. 16
SHEET 3 OF 12

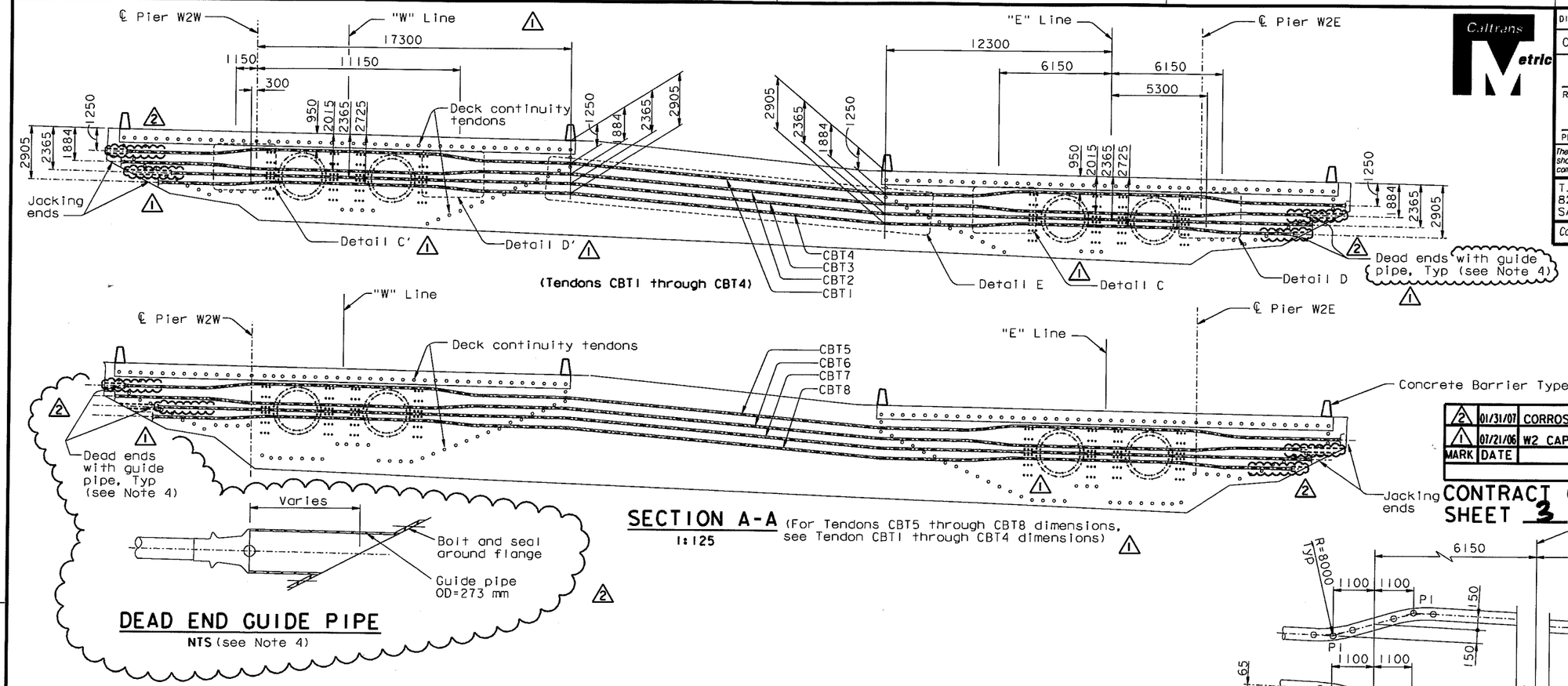

SECTION A-A
1:125
(For Tendons CBT5 through CBT8 dimensions, see Tendon CBT1 through CBT4 dimensions)

DEAD END GUIDE PIPE
NTS (see Note 4)

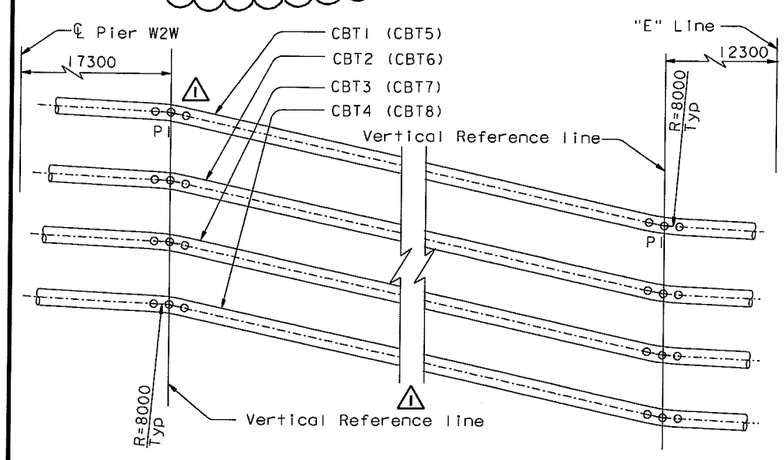

DETAIL E
NTS

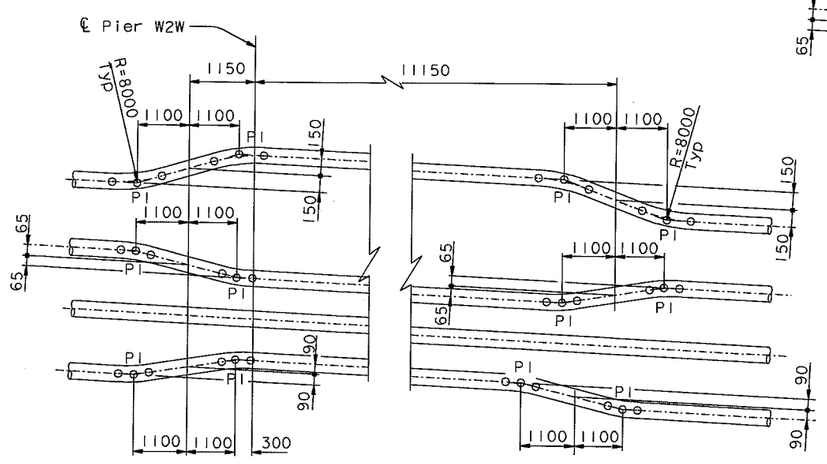

DETAIL C'
NTS

DETAIL D'
NTS

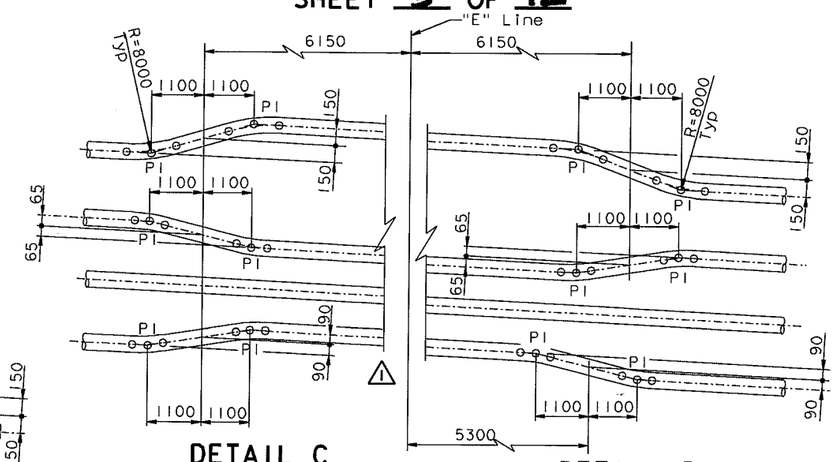

DETAIL C
NTS

DETAIL D
NTS

NOTES:

1. For additional details, see "W2 Cap Beam Post-Tensioning Details No.1" sheet.
2. For PT blockout details, see "W2 Cap Beam Blockout Details" sheets.
3. For deck continuity tendon details, see "W2 Cap Beam Post-Tensioning Details No.5" through "W2 Cap Beam Post-Tensioning Details No.12" sheets.
4. Contractor shall coordinate the dead end guide pipe details with the PT System Supplier and shall submit them to the Engineer for review and approval. Contractor shall grout the guide pipe after stressing operations have been completed.

ALL DIMENSIONS ARE IN MILLIMETERS UNLESS OTHERWISE SHOWN

100 % PS&E

DATE PLOTTED => 15 MAR 2007 TIME PLOTTED => 15:24:30

USERNAME => visitor

R. Valizadeh/V. Toan/Y.L./W.L./F.C.
DESIGN OVERSIGHT
Roya Valizadeh / Vong Toan / Y. Lu
SIGN OFF DATE 01/31/07

Rev. Date: 5-18-98

DESIGN	BY J. Sun	CHECKED M. Chen	
DETAILS	BY J. Duxbury	CHECKED M. Chen	
QUANTITIES	BY S. Shi	CHECKED D. Harrison	

PREPARED FOR THE STATE OF CALIFORNIA DEPARTMENT OF TRANSPORTATION

R. Manzanarez
PROJECT ENGINEER

BRIDGE NO. 34-0006L/R
KILOMETER POST 13.2/13.9

CU 04
EA 0120F1

ORIGINAL SCALE IN MILLIMETERS FOR REDUCED PLANS 0 10 20 30 40 50 60 70 80 90 100

DISREGARD PRINTS BEARING EARLIER REVISION DATES

REVISION DATES (PRELIMINARY STAGE ONLY) 08/08/99 05/27/01 04/08/02 07/01/02 12/19/02

SHEET 046R2 OF

SAN FRANCISCO OAKLAND BAY BRIDGE
EAST SPAN SEISMIC SAFETY PROJECT
SELF-ANCHORED SUSPENSION BRIDGE
(SUPERSTRUCTURE & TOWER)

W2 CAP BEAM POST-TENSIONING DETAILS NO. 2

FILE => I:\bb\04-012001\sas\contract plans and cco\cco\in progress\cco#16\decpt02.dgn

DIST.	COUNTY	ROUTE	KILOMETER POST TOTAL PROJECT	SHEET NO.	TOTAL SHEETS
04	SF	80	13.2/13.9	466R2	1204

REGISTERED ENGINEER - CIVIL

12-6-04
PLANS APPROVAL DATE

REGISTERED PROFESSIONAL ENGINEER John Sun No. C 54648 Exp. 12/31/05 CIVIL STATE OF CALIFORNIA

The State of California or its officers or agents shall not be responsible for the accuracy or completeness of electronic copies of this plan sheet.

T.Y. LIN / MOFFATT & NICHOL
825 BATTERY STREET
SAN FRANCISCO, CA 94111

Caltrans now has a web site! To get to the web site, go to: http://www.dot.ca.gov

Caltrans Metric

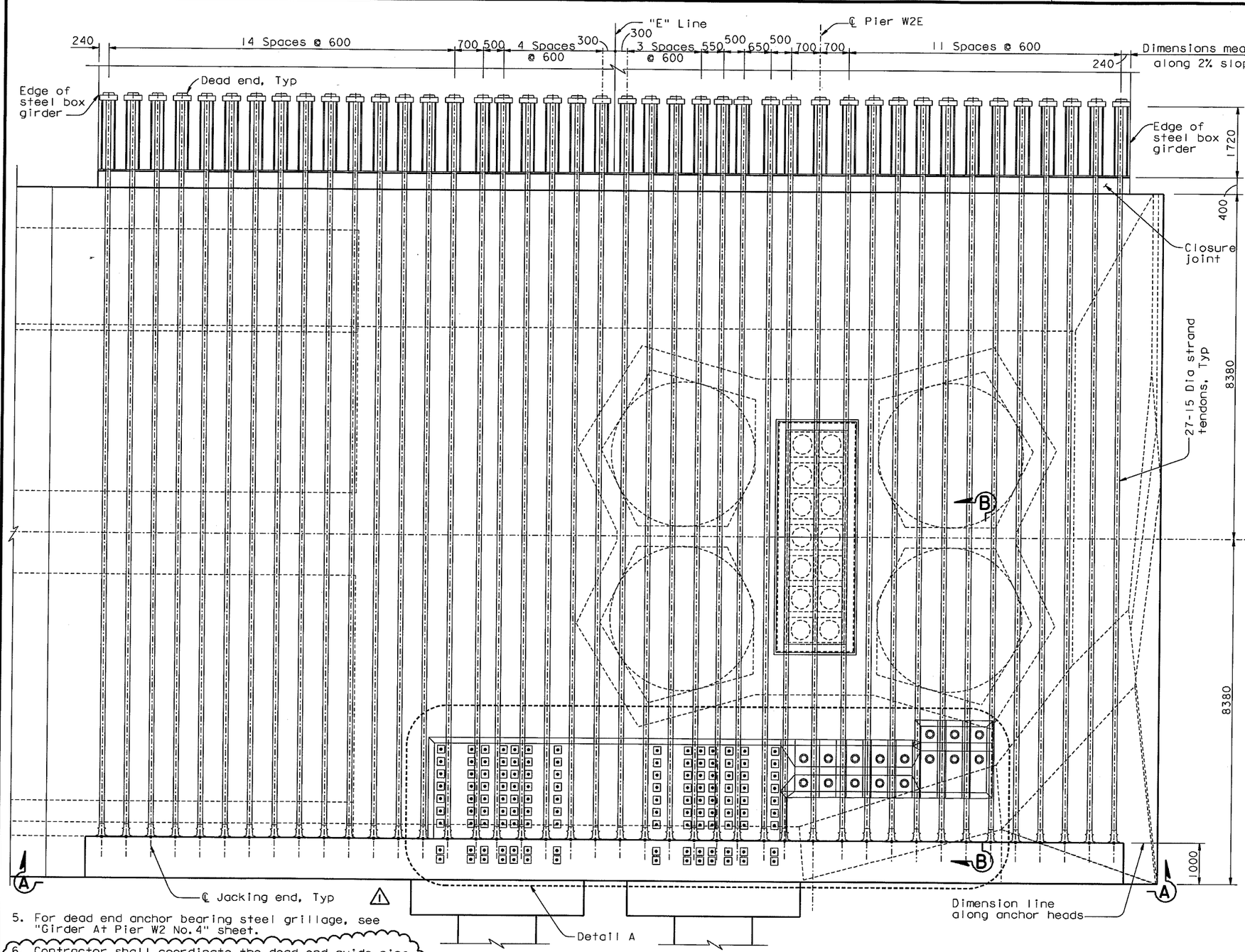

FOR REVISIONS ONLY

REGISTERED PROFESSIONAL ENGINEER James P. Duxbury No. C 64677 Exp. 06/30/07 CIVIL STATE OF CALIFORNIA

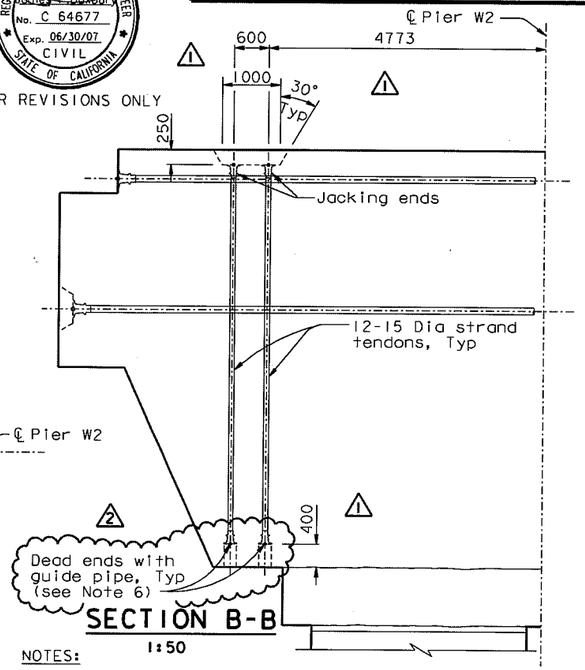

SECTION B-B
1:50

NOTES:

1. For Section A-A, see "W2 Cap Beam Post-Tensioning Details No. 9" sheet.
2. For Detail A, see "W2 Cap Beam Post-Tensioning Details No. 10" sheet.
3. All W2 cap beam continuity tendons are ASTM A416 Grade 270 (fu=1860 MPa), low relaxation, 27-15 Dia seven wire strand PT, unless specified otherwise. For additional prestressing details, see "Prestressing Notes" sheet.
4. For blockout details, see "W2 Cap Beam Blockout Details" sheets.

5. For dead end anchor bearing steel grillage, see "Girder At Pier W2 No. 4" sheet.
6. Contractor shall coordinate the dead end guide pipe details with the PT System Supplier and shall submit them to the Engineer for review and approval. Contractor shall grout the guide pipe after stressing operations have been completed.

TOP TENDON LAYOUT PLAN ("E" Line)
1:50

MARK	DATE	DESCRIPTIONS	BY	CH'D	CCO#
2	01/31/07	CORROSION PROTECTION	JD	AS	16
1	07/21/06	W2 CAP BEAM ISD	JD	NV	23

REVISIONS

CONTRACT CHANGE ORDER NO. 16
SHEET 4 OF 12

ALL DIMENSIONS ARE IN MILLIMETERS UNLESS OTHERWISE SHOWN

SAN FRANCISCO OAKLAND BAY BRIDGE
EAST SPAN SEISMIC SAFETY PROJECT
SELF-ANCHORED SUSPENSION BRIDGE
(SUPERSTRUCTURE & TOWER)

W2 CAP BEAM POST-TENSIONING DETAILS NO. 5

R. Valizadeh/V. Toan/Y.L./W.L./F.C.
DESIGN OVERSIGHT
Roger Valizadeh / Vong Toan / Y. Liu
SIGN OFF DATE 01/31/07

	BY	CHECKED
DESIGN	J. Sun	M. Chen
DETAILS	J. Duxbury	M. Chen
QUANTITIES	S. Shi	D. Harrison

PREPARED FOR THE STATE OF CALIFORNIA DEPARTMENT OF TRANSPORTATION

R. Manzanarez
PROJECT ENGINEER

BRIDGE NO. 34-0006L/R
KILOMETER POST 13.2/13.9

Rev. Date: 5-18-98

ORIGINAL SCALE IN MILLIMETERS FOR REDUCED PLANS 0 10 20 30 40 50 60 70 80 90 100

CU 04
EA 0120F1

DISREGARD PRINTS BEARING EARLIER REVISION DATES

REVISION DATES (PRELIMINARY STAGE ONLY) 08/02/99 05/31/01 04/08/02 07/01/02 12/19/02

SHEET 049R2 OF

FILE => I:\bb\04-012001\sas\contract plans and cco\cco\in progress\cco#16\aecpt05.dgn

100 % PS&E

USERNAME => visitor DATE PLOTTED => 15 MAR 2007 TIME PLOTTED => 15:26:12

DIST.	COUNTY	ROUTE	KILOMETER POST TOTAL PROJECT	SHEET NO.	TOTAL SHEETS
04	SF	80	13.2/13.9	468R2	1204

REGISTERED ENGINEER - CIVIL

12-6-04
PLANS APPROVAL DATE

REGISTERED PROFESSIONAL ENGINEER John Sun No. C 54648 Exp. 12/31/05 CIVIL STATE OF CALIFORNIA

The State of California or its officers or agents shall not be responsible for the accuracy or completeness of electronic copies of this plan sheet.

T.Y. LIN / MOFFATT & NICHOL
825 BATTERY STREET
SAN FRANCISCO, CA 94111

Caltrans now has a web site! To get to the web site, go to: http://www.dot.ca.gov

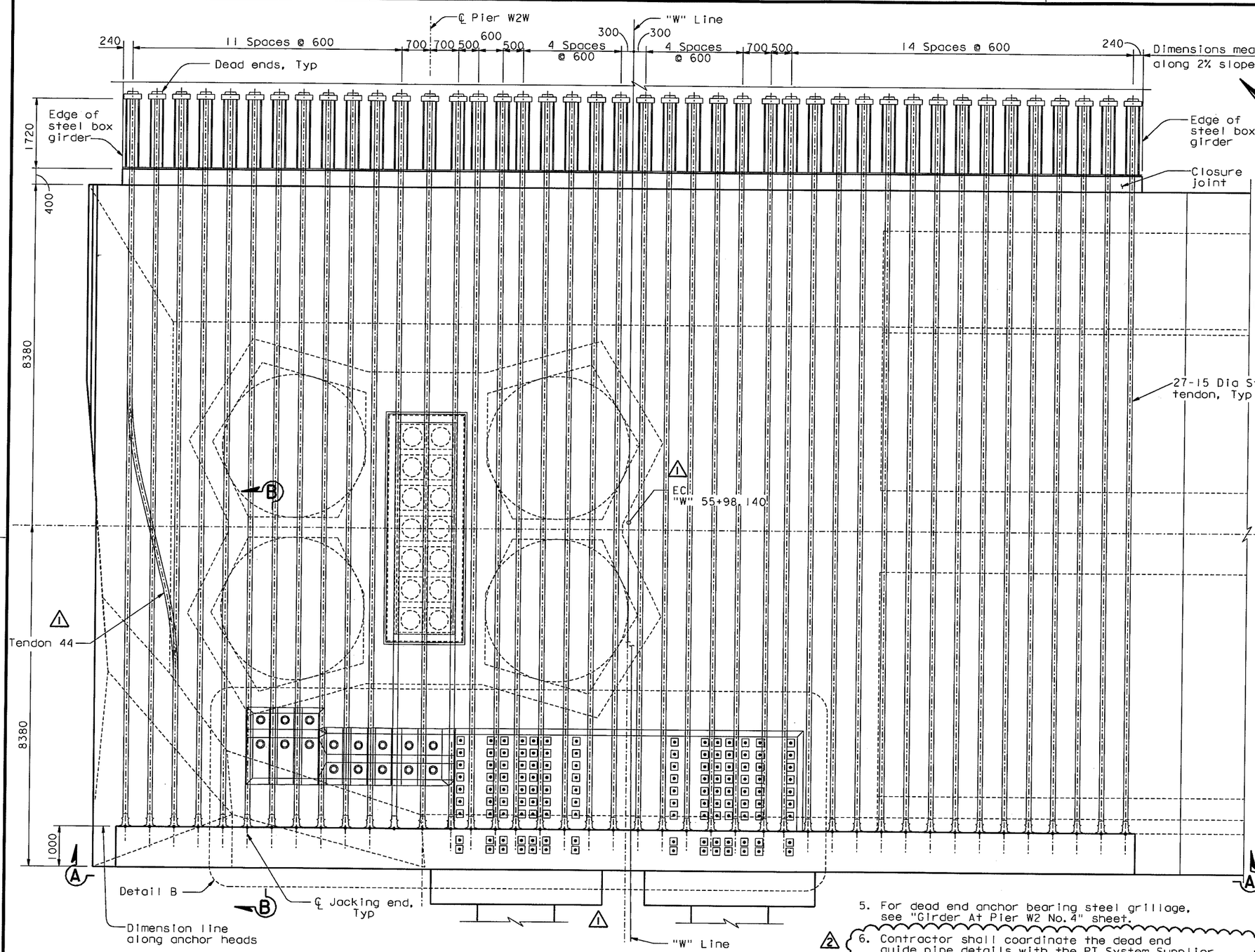

TOP TENDON LAYOUT PLAN ("W" Line)

1:50

ALL DIMENSIONS ARE IN MILLIMETERS UNLESS OTHERWISE SHOWN

REGISTERED PROFESSIONAL ENGINEER James P. Duxbury No. C 64677 Exp. 06/30/07 CIVIL STATE OF CALIFORNIA

FOR REVISIONS ONLY

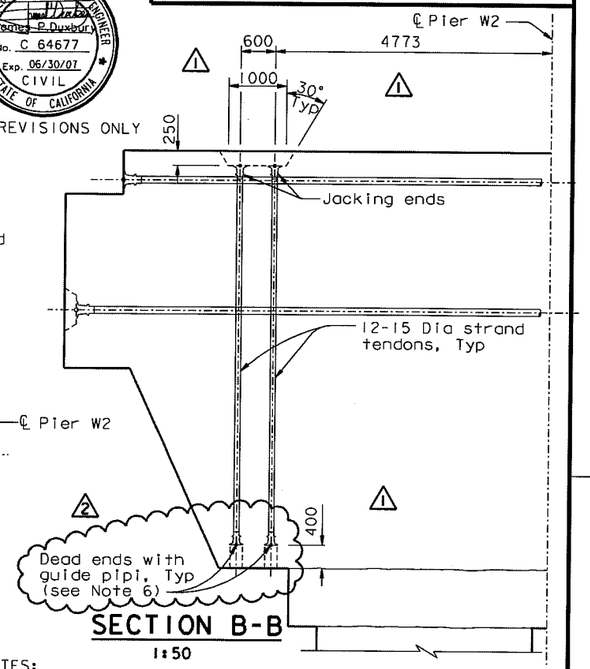

SECTION B-B

1:50

NOTES:

1. For Section A-A, see "W2 Cap Beam Post-Tensioning Details No. 9" sheet.
2. For Detail B, see "W2 Cap Beam Post-Tensioning Details No. 10" sheet.
3. All W2 cap beam continuity tendons are ASTM A416 Grade 270 (fu=1860 MPa), low relaxation, 27-15 Dia seven wire strand PT, unless specified otherwise. For additional prestressing details, see "Prestressing Notes" sheet.
4. For blockout details, see "W2 Cap Beam Blockout Details" sheets.
5. For dead end anchor bearing steel grillage, see "Girder At Pier W2 No. 4" sheet.
6. Contractor shall coordinate the dead end guide pipe details with the PT System Supplier and shall submit them to the Engineer for review and approval. Contractor shall grout the guide pipe after stressing operations have been completed.

MARK	DATE	DESCRIPTIONS	BY	CH'D	CCO#
2	01/31/07	CORROSION PROTECTION	JD	AS	16
1	07/21/06	W2 CAP BEAM ISD	JD	NV	23

REVISIONS

CONTRACT CHANGE ORDER NO. 16
SHEET 5 OF 12

SAN FRANCISCO OAKLAND BAY BRIDGE
EAST SPAN SEISMIC SAFETY PROJECT
SELF-ANCHORED SUSPENSION BRIDGE
(SUPERSTRUCTURE & TOWER)

W2 CAP BEAM POST-TENSIONING DETAILS NO. 7

R. Valizadeh/V. Toan/Y.L./W.L./F.C.
DESIGN OVERSIGHT
SIGN OFF DATE 01/31/07

	BY	CHECKED
DESIGN	J. Sun	M. Chen
DETAILS	J. Duxbury	M. Chen
QUANTITIES	S. Shi	D. Harrison

PREPARED FOR THE STATE OF CALIFORNIA DEPARTMENT OF TRANSPORTATION

R. Manzanarez
PROJECT ENGINEER

BRIDGE NO. 34-0006L/R
KILOMETER POST 13.2/13.9

Rev. Date: 5-18-98

ORIGINAL SCALE IN MILLIMETERS FOR REDUCED PLANS 0 10 20 30 40 50 60 70 80 90 100

CU 04
EA 0120F1

DISREGARD PRINTS BEARING EARLIER REVISION DATES

REVISION DATES (PRELIMINARY STAGE ONLY) 08/07/99 05/31/01 04/08/02 07/01/02 12/19/02

SHEET 051R2 OF

FILE => I:\bb\04-012001\sas\contract plans and cco\cco\in progress\cco#16\oecpt07.dgn

USERNAME => visitor DATE PLOTTED => 15 MAR 2007 TIME PLOTTED => 15:27:40

100 % PS&E

DIST.	COUNTY	ROUTE	KILOMETER POST TOTAL PROJECT	SHEET NO.	TOTAL SHEETS
04	SF	80	13.2/13.9	470R2	1204

REGISTERED ENGINEER - CIVIL

12-6-04
PLANS APPROVAL DATE

REGISTERED PROFESSIONAL ENGINEER John Sun No. C 54648 Exp. 12/31/05 CIVIL STATE OF CALIFORNIA

The State of California or its officers or agents shall not be responsible for the accuracy or completeness of electronic copies of this plan sheet.

T.Y. LIN / MOFFATT & NICHOL
825 BATTERY STREET
SAN FRANCISCO, CA 94111

Caltrans now has a web site! To get to the web site, go to: http://www.dot.ca.gov

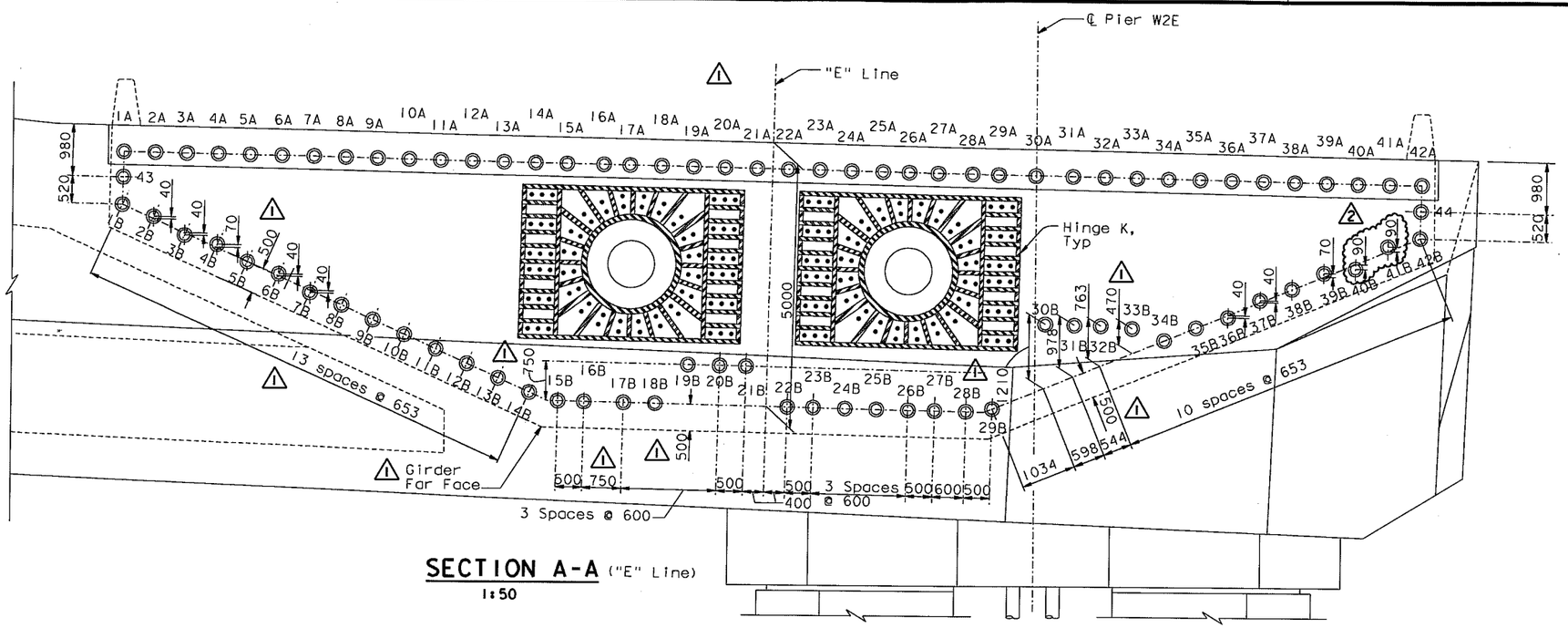

SECTION A-A ("E" Line)
1:50

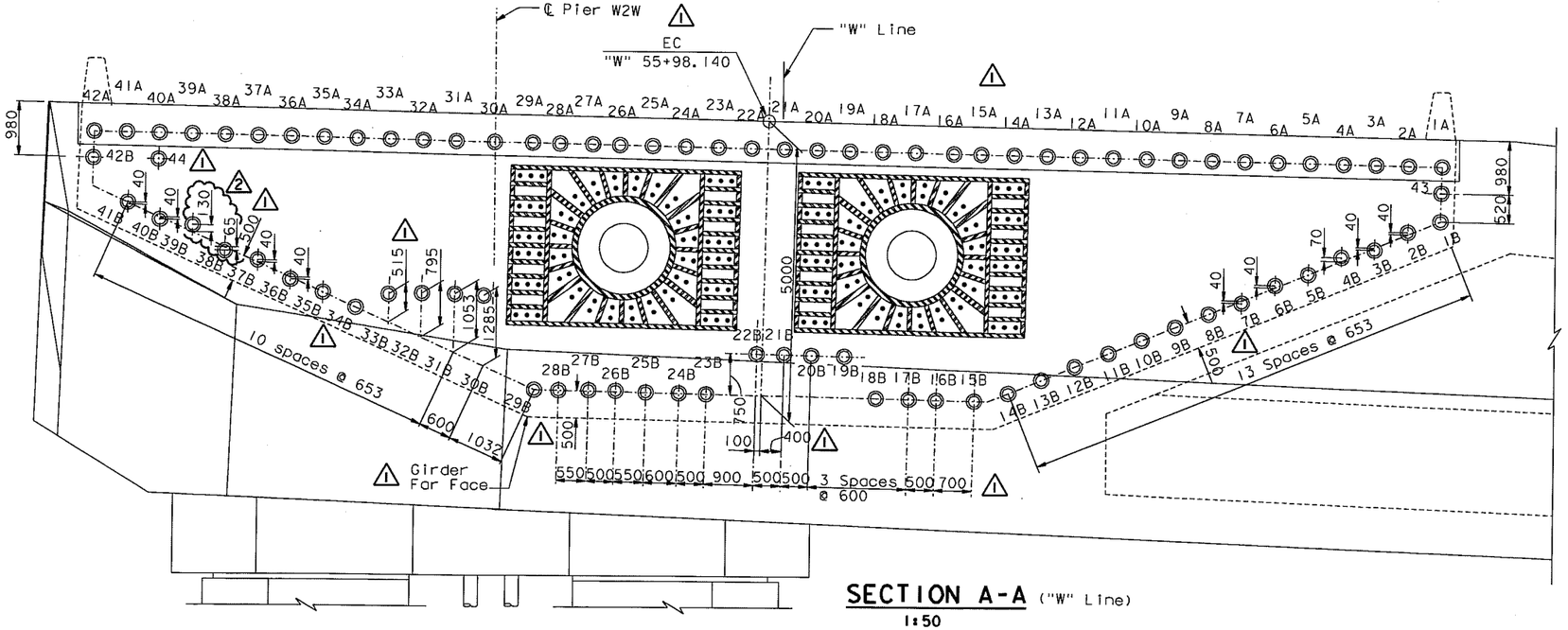

SECTION A-A ("W" Line)
1:50

NOTES:

1. For additional details, see "W2 Cap Beam Post-Tensioning Details No.5" and "W2 Cap Beam Post-Tensioning Details No.7" sheets.
2. Jacking force in the W2 cap beam continuity tendons (1A-42A, 1B-42B, 43 & 44) shall be 5265 kN typical.

REGISTERED PROFESSIONAL ENGINEER Jamal Duxbury No. C 64677 Exp. 06/30/07 CIVIL STATE OF CALIFORNIA

FOR REVISIONS ONLY

MARK	DATE	DESCRIPTIONS	BY	CH'D	CCO#
2	01/31/07	CORROSION PROTECTION	JD	AS	16
1	07/21/06	W2 CAP BEAM ISD	JD	NV	23

REVISIONS

CONTRACT CHANGE ORDER NO. 16
SHEET 6 OF 12

100 % PS&E

ALL DIMENSIONS ARE IN MILLIMETERS UNLESS OTHERWISE SHOWN

R. Valizadeh/V. Toan/Y.L./W.L./F.C.
DESIGN OVERSIGHT
SIGN OFF DATE 01/31/07
Rev. Date: 5-18-98

	BY	CHECKED
DESIGN	J. Sun	M. Chen
DETAILS	J. Duxbury	M. Chen
QUANTITIES	S. Shi	D. Harrison

PREPARED FOR THE STATE OF CALIFORNIA DEPARTMENT OF TRANSPORTATION

R. Manzanarez
PROJECT ENGINEER

BRIDGE NO. 34-0006L/R
KILOMETER POST 13.2/13.9

SAN FRANCISCO OAKLAND BAY BRIDGE
EAST SPAN SEISMIC SAFETY PROJECT
SELF-ANCHORED SUSPENSION BRIDGE
(SUPERSTRUCTURE & TOWER)

W2 CAP BEAM POST-TENSIONING DETAILS NO. 9

ORIGINAL SCALE IN MILLIMETERS FOR REDUCED PLANS 0 10 20 30 40 50 60 70 80 90 100

CU 04
EA 0120F1

DISREGARD PRINTS BEARING EARLIER REVISION DATES

REVISION DATES (PRELIMINARY STAGE ONLY) 09/08/99 05/31/01 04/08/02 07/09/02 12/19/02

SHEET 053R2 OF

FILE => I:\bb\04-012001\sas\contract plans and cco\cco\in progress\cco#16\aecpt09.dgn

USERNAME => \visitor DATE PLOTTED => 15 MAR 2007 TIME PLOTTED => 15:29:05

DIST.	COUNTY	ROUTE	KILOMETER POST TOTAL PROJECT	SHEET NO.	TOTAL SHEETS
04	SF	80	13.2/13.9	473R2	1204

REGISTERED ENGINEER - CIVIL

12-6-04
PLANS APPROVAL DATE

REGISTERED PROFESSIONAL ENGINEER John Sun No. C 54648 Exp. 12/31/05 CIVIL STATE OF CALIFORNIA

The State of California or its officers or agents shall not be responsible for the accuracy or completeness of electronic copies of this plan sheet.

T.Y. LIN / MOFFATT & NICHOL
825 BATTERY STREET
SAN FRANCISCO, CA 94111

To get to the web site, go to: http://www.dot.ca.gov

W2 CAP BEAM CONTINUITY TENDON TABLE-1 FOR "E" LINE

Tendon No.	Type	Tendon No.	Type
1A	1	24A	1
1B	2	24B	2
2A	1	25A	1
2B	5	25B	2
3A	1	26A	1
3B	5	26B	2
4A	1	27A	1
4B	5	27B	2
5A	1	28A	1
5B	2	28B	2
6A	1	29A	3
6B	5	29B	2
7A	1	30A	3
1 7B	5	30B	5, 9
8A	1	31A	3
8B	2	31B	5
9A	1	32A	1
9B	2	32B	5
10A	1	33A	1
10B	2	33B	5
11A	1	34A	1
11B	2	34B	2
12A	1	35A	1
12B	2	35B	2
13A	1	36A	1
13B	2	36B	5
14A	1	37A	1
14B	2	37B	5
15A	1	38A	1
15B	8 1	38B	2
16A	1	39A	1
16B	8 1	39B	5
17A	1	40A	1
17B	2	40B	5
18A	1	41A	1
18B	10 1	41B	5
19A	1	42A	1
19B	4	42B	2
20A	1	43	2
20B	4	44	2
21A	1		
21B	4		
22A	1		
22B	2		
23A	1		
23B	2		

W2 CAP BEAM CONTINUITY TENDON TABLE-1 FOR "W" LINE

Tendon No.	Type	Tendon No.	Type	
1A	1	24A	1	
1B	2	24B	2	
2A	1	25A	1	
2B	5	25B	2	
3A	1	26A	1	
1 3B	5	26B	8	
4A	1	27A	1	
1 4B	5	27B	8	
5A	1	28A	1	
5B	2	28B	2	
6A	1	29A	3	
6B	5	29B	2	
7A	1	30A	3	
1 7B	5	30B	5, 9	
8A	1	31A	3	
8B	2	31B	5	
9A	1	32A	1	
9B	2	32B	5	
10A	1	33A	1	
10B	2	33B	5	
11A	1	34A	1	
11B	2	34B	2	
12A	1	35A	1	
12B	2	35B	2	
13A	1	36A	1	
13B	2	36B	5	
14A	1	37A	1	
14B	2	37B	5	
15A	1	38A	1	
15B	2	38B	5	2
16A	1	39A	1	
16B	2	39B	5	
17A	1	40A	1	
17B	2	40B	5	
18A	1	41A	1	
18B	2	41B	5	
19A	1	42A	1	
19B	4	42B	6	1
20A	1	43	2	
20B	4	44	7	1
21A	1			
21B	4, 8	1		
22A	1			
22B	4, 8	1		
23A	1			
23B	2			

W2 CAP BEAM CONTINUITY TENDON TABLE-2 FOR "E" LINE

Tendon No.	h	L	e_5	R
2B	-40	2200	500	8000
3B	+40	2200	500	8000
4B	-70	2200	500	8000
6B	-40	2200	500	8000
7B	+40	2200	500	8000
1 30B	-1210	2400	1200	4000
31B	-978	2400	1200	5000
32B	-763	2400	1200	4000
1 33B	-470	2400	1200	8000
36B	+40	2200	500	8000
37B	-40	2200	500	8000
39B	-70	2200	500	8000
40B	2 +90	2200	500	8000
41B	-90	2200	500	8000

1 Tendon No.	p
15B	-50
16B	-50
30B	+200

W2 CAP BEAM CONTINUITY TENDON TABLE-2 FOR "W" LINE

Tendon No.	h	L	e_5	R	
2B	-40	2200	500	8000	
3B	+40	2200	500	8000	
4B	-70	2200	500	8000	
6B	-40	2200	500	8000	
7B	+40	2200	500	8000	
1 30B	-1285	-1285	1200	4000	
31B	-1053	2400	1200	5000	
32B	-795	2400	1200	5000	
1 33B	-515	2400	1200	8000	
36B	+40	2200	500	8000	
37B	-40	2200	500	8000	
38B	+65	2200	500	8000	2
39B	-130	2200	500	8000	
40B	+40	2200	500	8000	
41B	-40	2200	500	8000	

1 Tendon No.	p
21B	+100
22B	+100
26B	-50
27B	-50
30B	-200
44	+1200

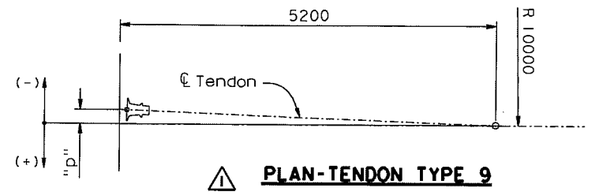

1 **PLAN-TENDON TYPE 9**

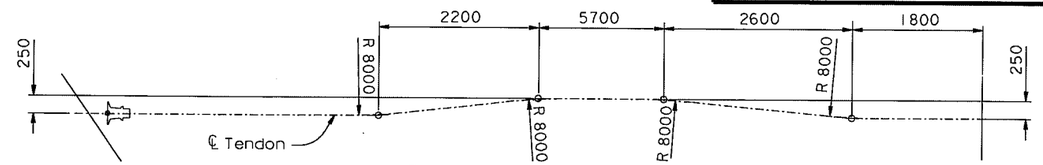

1 **ELEVATION-TENDON TYPE 10**

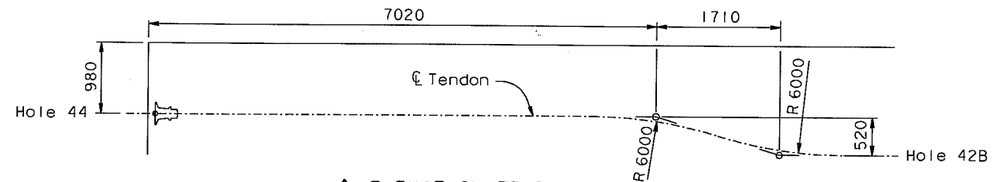

1 **ELEVATION-TENDON TYPE 6**

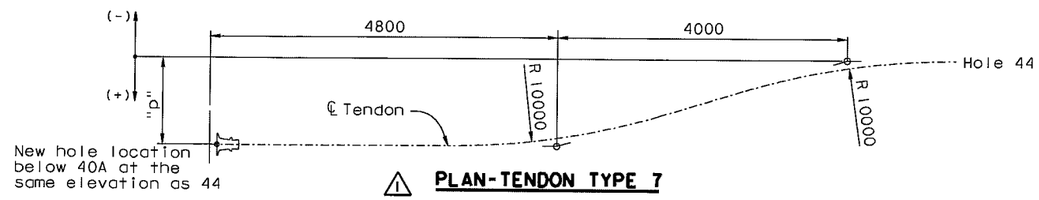

1 **PLAN-TENDON TYPE 7**

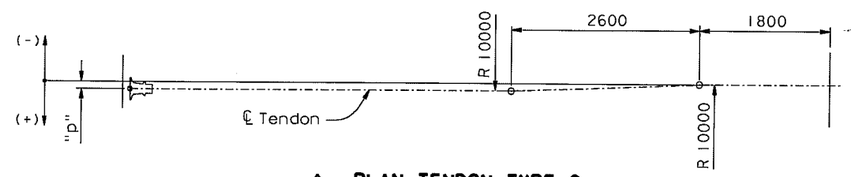

1 **PLAN-TENDON TYPE 8**

REGISTERED PROFESSIONAL ENGINEER James P. Duxbury No. C 64677 Exp. 06/30/07 CIVIL STATE OF CALIFORNIA

NOTES:

1. For Type 1 through Type 5 tendon geometry, see "W2 Cap Beam Post-Tensioning Details No. 11" sheet.
2. For general stressing sequence, see "Pier W2 Construction Sequence" sheet.
3. For additional prestressing details, see "Prestressing Notes" sheet.

FOR REVISIONS ONLY

MARK	DATE	DESCRIPTIONS	BY	CH'D	CCO#
2	01/31/07	CORROSION PROTECTION	JD	AS	16
1	07/21/06	W2 CAP BEAM ISD	JD	NV	23

REVISIONS

CONTRACT CHANGE ORDER NO. 16
SHEET 7 OF 12

100 % PS&E

ALL DIMENSIONS ARE IN MILLIMETERS UNLESS OTHERWISE SHOWN

SAN FRANCISCO OAKLAND BAY BRIDGE
EAST SPAN SEISMIC SAFETY PROJECT
SELF-ANCHORED SUSPENSION BRIDGE
(SUPERSTRUCTURE & TOWER)

W2 CAP BEAM POST-TENSIONING DETAILS NO. 12

R. Valizadeh/V. Toan/Y.L./W.L./F.C.
DESIGN OVERSIGHT
SIGN OFF DATE 01/31/07

	BY	CHECKED
DESIGN	J. Sun	M. Chen
DETAILS	J. Duxbury	M. Chen
QUANTITIES	S. Shi	D. Harrison

PREPARED FOR THE STATE OF CALIFORNIA DEPARTMENT OF TRANSPORTATION

R. Manzanarez
PROJECT ENGINEER

BRIDGE NO. 34-0006L/R
KILOMETER POST 13.2/13.9

Rev. Date: 5-15-98

ORIGINAL SCALE IN MILLIMETERS FOR REDUCED PLANS 0 10 20 30 40 50 60 70 80 90 100

CU 04
EA 0120F1

DISREGARD PRINTS BEARING EARLIER REVISION DATES

REVISION DATES (PRELIMINARY STAGE ONLY) 05/17/01 04/09/02 01/24/02 12/19/02

SHEET 056R2 OF

FILE => I:\bb\04-01200I\sas\contract plans and cco\cco\in progress\cco#16\aecpt12.dgn

USERNAME => visitor DATE PLOTTED => 15 MAR 2007 TIME PLOTTED => 15:30:33

DIST.	COUNTY	ROUTE	KILOMETER POST TOTAL PROJECT	SHEET NO.	TOTAL SHEETS
04	SF	80	13.2/13.9	499R2	1204

REGISTERED ENGINEER - CIVIL

12-6-04

PLANS APPROVAL DATE

REGISTERED PROFESSIONAL ENGINEER John Sun No. C 54648 Exp. 12/31/05 CIVIL STATE OF CALIFORNIA

The State of California or its officers or agents shall not be responsible for the accuracy or completeness of electronic copies of this plan sheet.

T.Y. LIN / MOFFATT & NICHOL
825 BATTERY STREET
SAN FRANCISCO, CA 94111

Caltrans now has a web site! To get to the web site, go to: http://www.dot.ca.gov

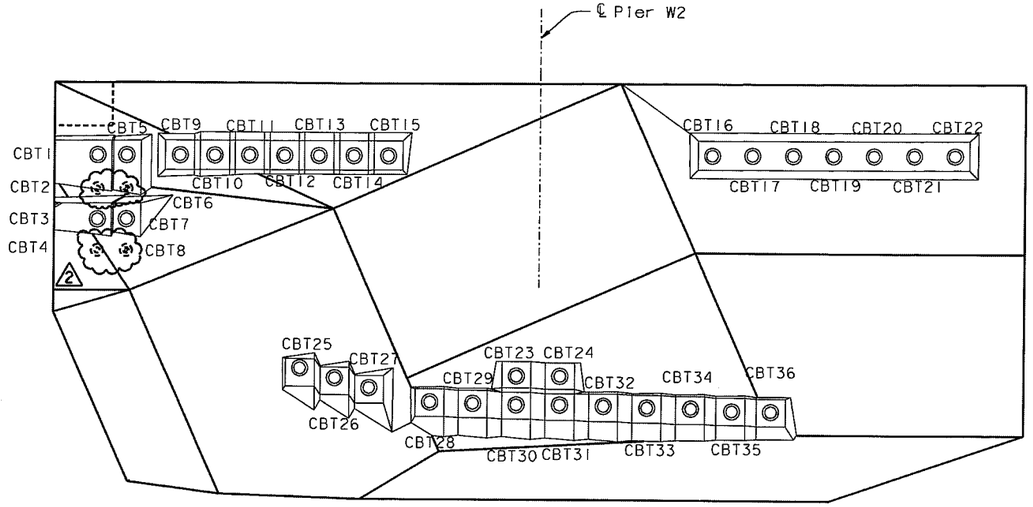

⚠1 ELEVATION (Cap beam transverse PT tendons)

1:50

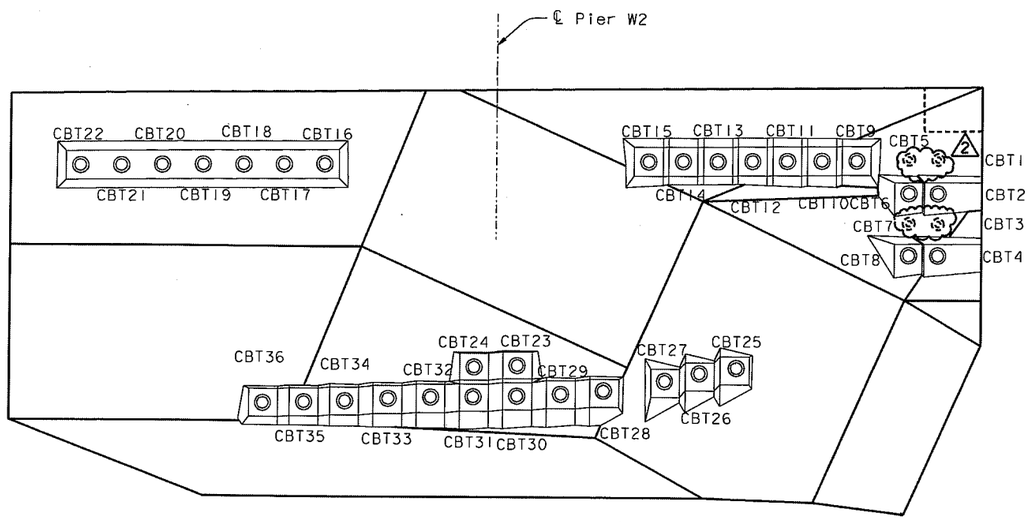

⚠1 ELEVATION (Cap beam transverse PT tendons)

1:50

CAP BEAM TRANSVERSE PT TENDON BLOCKOUT TABLE

South face		North face	
Tendon	Blockout Detail	Tendon	Blockout Detail
CBT1	R	CBT1	S
CBT2	R	CBT2	S
CBT3	R	CBT3	S
CBT4	R	CBT4	S
CBT5	R	CBT5	S
CBT6	R	CBT6	S
CBT7	R	CBT7	S
CBT8	R	CBT8	S
CBT9	J	CBT9	J
CBT10	J	CBT10	J
CBT11	K	CBT11	K
CBT12	K	CBT12	K
CBT13	K	CBT13	K
CBT14	K	CBT14	K
CBT15	K	CBT15	K
CBT16	L	CBT16	L
CBT17	L	CBT17	L
CBT18	L	CBT18	L
CBT19	L	CBT19	L
CBT20	L	CBT20	L
CBT21	L	CBT21	L
CBT22	L	CBT22	L
CBT23	P	CBT23	P
CBT24	P	CBT24	P
CBT25	M	CBT25	M
CBT26	M	CBT26	M
CBT27	M	CBT27	M
CBT28	N	CBT28	N
CBT29	N	CBT29	N
CBT30	P	CBT30	P
CBT31	P	CBT31	P
CBT32	N	CBT32	N
CBT33	N	CBT33	N
CBT34	N	CBT34	N
CBT35	N	CBT35	N
CBT36	Q	CBT36	Q

REGISTERED PROFESSIONAL ENGINEER Douglas P. Duxbury No. C 64677 Exp. 06/30/07 CIVIL STATE OF CALIFORNIA

FOR REVISIONS ONLY

MARK	DATE	DESCRIPTIONS	BY	CH'D	CCO#
2	01/31/07	CORROSION PROTECTION	JD	AS	16
1	07/21/06	W2 CAP BEAM ISD	JD	NV	23

REVISIONS

CONTRACT CHANGE ORDER NO. 16
SHEET 8 OF 12

NOTES:

1. For Details J through L, see "W2 Cap Beam Blockout Details No.6" sheet.
2. For Details M and N, see "W2 Cap Beam Blockout Details No.7" sheet.
3. For Details P and Q, see "W2 Cap Beam Blockout Details No.8" sheet.
4. For Detail R, see "W2 Cap Beam Blockout Details No.9" sheet.
5. For Detail S, see "W2 Cap Beam Blockout Details No.10" sheet.
6. For additional prestressing details, see "Prestressing Notes" sheet.

100 % PS&E

DATE PLOTTED => 15 MAR 2007 TIME PLOTTED => 15:32:24

USERNAME => visitor

ALL DIMENSIONS ARE IN MILLIMETERS UNLESS OTHERWISE SHOWN

R. Valizadeh/V. Toan/Y.L./W.L./F.C.
DESIGN OVERSIGHT
SIGN OFF DATE 01/31/07

Rev. Date: 5-18-98

	BY	CHECKED
DESIGN	J. Sun	M. Chen
DETAILS	J. Duxbury	M. Chen
QUANTITIES	S. Shi	D. Harrison

PREPARED FOR THE STATE OF CALIFORNIA DEPARTMENT OF TRANSPORTATION

R. Manzanarez
PROJECT ENGINEER

BRIDGE NO. 34-0006L/R
KILOMETER POST 13.2/13.9

SAN FRANCISCO OAKLAND BAY BRIDGE
EAST SPAN SEISMIC SAFETY PROJECT
SELF-ANCHORED SUSPENSION BRIDGE
(SUPERSTRUCTURE & TOWER)

W2 CAP BEAM BLOCKOUT DETAILS NO. 2

ORIGINAL SCALE IN MILLIMETERS FOR REDUCED PLANS 0 10 20 30 40 50 60 70 80 90 100

CU 04
EA 0120F1

DISREGARD PRINTS BEARING EARLIER REVISION DATES

REVISION DATES (PRELIMINARY STAGE ONLY) 08/02/99 05/17/01 04/08/02 07/08/02 12/19/02

SHEET 82R2 OF

FILE => I:\bb\04-012001\sas\contract plans and cco\cco\in progress\cco#16\aecbb02.dgn

DIST.	COUNTY	ROUTE	KILOMETER POST TOTAL PROJECT	SHEET NO.	TOTAL SHEETS
04	SF	80	13.2/13.9	506R2	1204

REGISTERED ENGINEER - CIVIL

12-6-04
PLANS APPROVAL DATE

REGISTERED PROFESSIONAL ENGINEER John Sun No. C 54648 Exp. 12/31/05 CIVIL STATE OF CALIFORNIA

The State of California or its officers or agents shall not be responsible for the accuracy or completeness of electronic copies of this plan sheet.

T.Y. LIN / MOFFATT & NICHOL
825 BATTERY STREET
SAN FRANCISCO, CA 94111

Caltrans now has a web site! To get to the web site, go to: http://www.dot.ca.gov

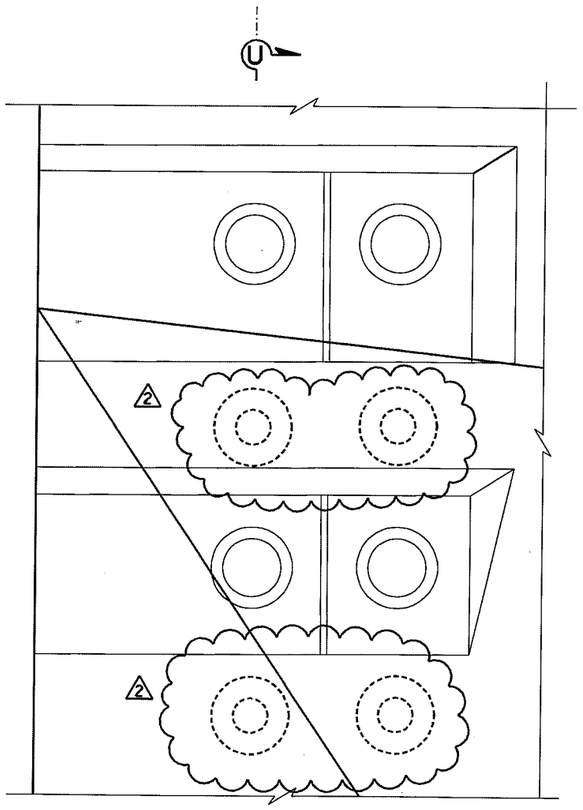

1 DETAIL R
1:10

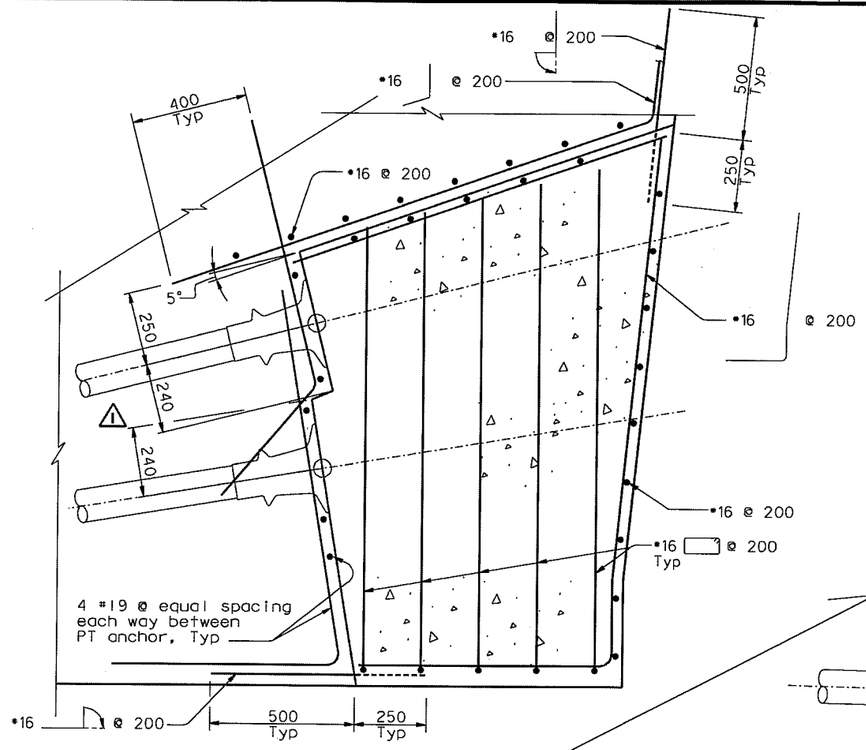

SECTION V-V
1:10

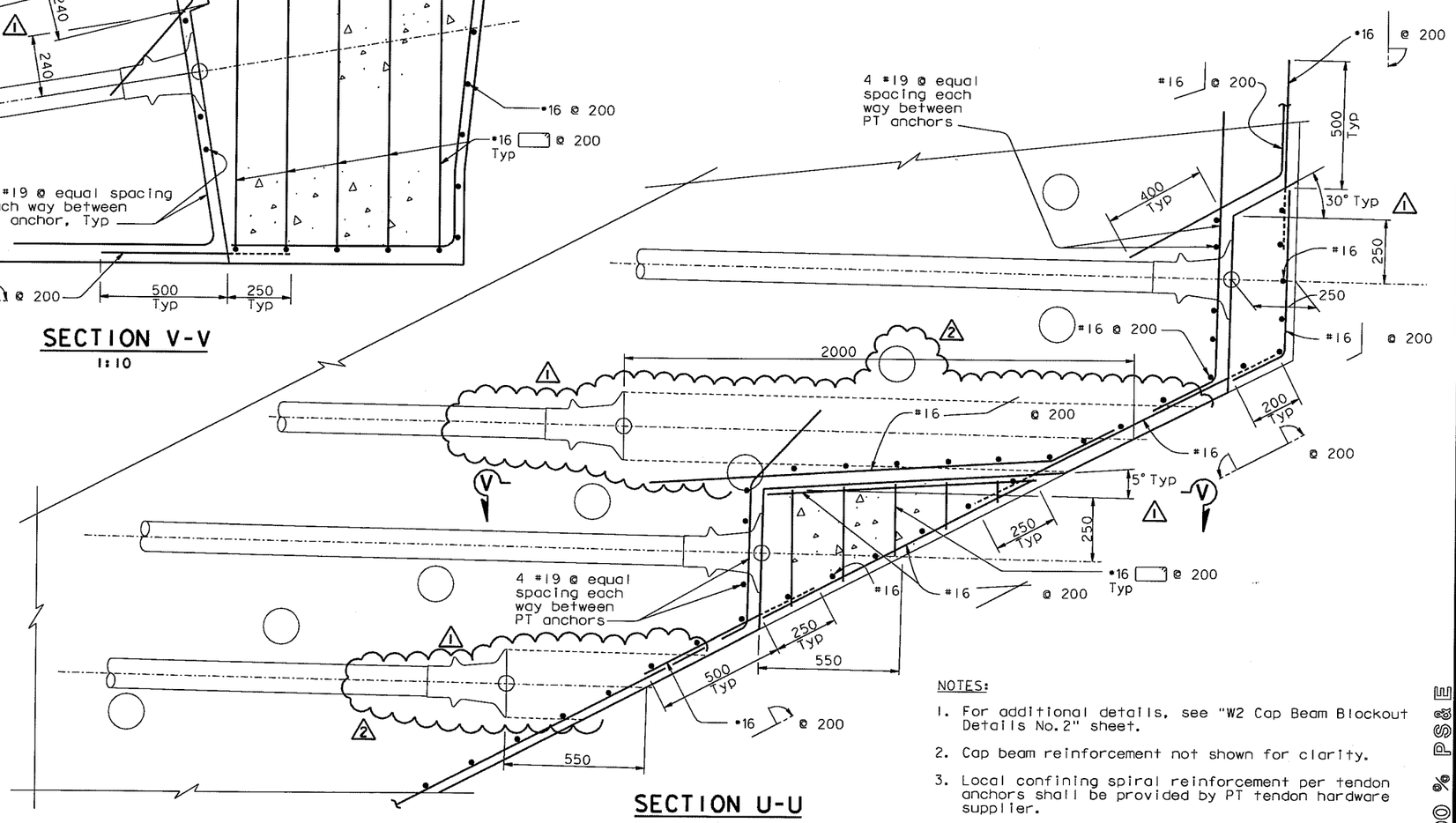

SECTION U-U
1:10

NOTES:

1. For additional details, see "W2 Cap Beam Blockout Details No.2" sheet.
2. Cap beam reinforcement not shown for clarity.
3. Local confining spiral reinforcement per tendon anchors shall be provided by PT tendon hardware supplier.

REGISTERED PROFESSIONAL ENGINEER James P. Duxbury No. C 64677 Exp. 06/30/07 CIVIL STATE OF CALIFORNIA

FOR REVISIONS ONLY

MARK	DATE	DESCRIPTIONS	BY	CH'D	CCO#
2	01/31/07	CORROSION PROTECTION	JD	NV	16
1	07/21/06	W2 CAP BEAM ISD	JD	NV	23

REVISIONS

CONTRACT CHANGE ORDER NO. 16
SHEET 9 OF 12

ALL DIMENSIONS ARE IN MILLIMETERS UNLESS OTHERWISE SHOWN

SAN FRANCISCO OAKLAND BAY BRIDGE
EAST SPAN SEISMIC SAFETY PROJECT
SELF-ANCHORED SUSPENSION BRIDGE
(SUPERSTRUCTURE & TOWER)

W2 CAP BEAM BLOCKOUT DETAILS NO. 9

R. Valizadeh/V. Toan/Y.L./W.L./F.C.
DESIGN OVERSIGHT
Roger Valizadeh / Vong Toan / Y Liu
SIGN OFF DATE 01/31/07

	BY	CHECKED
DESIGN	J. Sun	M. Chen
DETAILS	J. Duxbury	M. Chen
QUANTITIES	S. Shi	D. Harrison

PREPARED FOR THE STATE OF CALIFORNIA DEPARTMENT OF TRANSPORTATION

R. Manzanarez
PROJECT ENGINEER

BRIDGE NO. 34-0006L/R
KILOMETER POST 13.2/13.9

Rev. Date: 5-18-98

ORIGINAL SCALE IN MILLIMETERS FOR REDUCED PLANS 0 10 20 30 40 50 60 70 80 90 100

CU 04
EA 0120F1

DISREGARD PRINTS BEARING EARLIER REVISION DATES

REVISION DATES (PRELIMINARY STAGE ONLY) 05/31/01 04/08/02 07/01/02 12/19/02

SHEET 89R2 OF

FILE => I:\bb\04-012001\sas\contract plans and cco\cco\in progress\cco#16\aecbb09.dgn

100 % PS&E

USERNAME => visitor DATE PLOTTED => 15 MAR 2007 TIME PLOTTED => 15:33:45

DIST.	COUNTY	ROUTE	KILOMETER POST TOTAL PROJECT	SHEET NO.	TOTAL SHEETS
04	SF	80	13.2/13.9	507R2	1204

Caltrans Metric

REGISTERED ENGINEER - CIVIL

12-6-04
PLANS APPROVAL DATE

REGISTERED PROFESSIONAL ENGINEER John Sun No. C 54648 Exp. 12/31/05 CIVIL STATE OF CALIFORNIA

The State of California or its officers or agents shall not be responsible for the accuracy or completeness of electronic copies of this plan sheet.

T.Y. LIN / MOFFATT & NICHOL
825 BATTERY STREET
SAN FRANCISCO, CA 94111

Caltrans now has a web site! To get to the web site, go to: http://www.dot.ca.gov

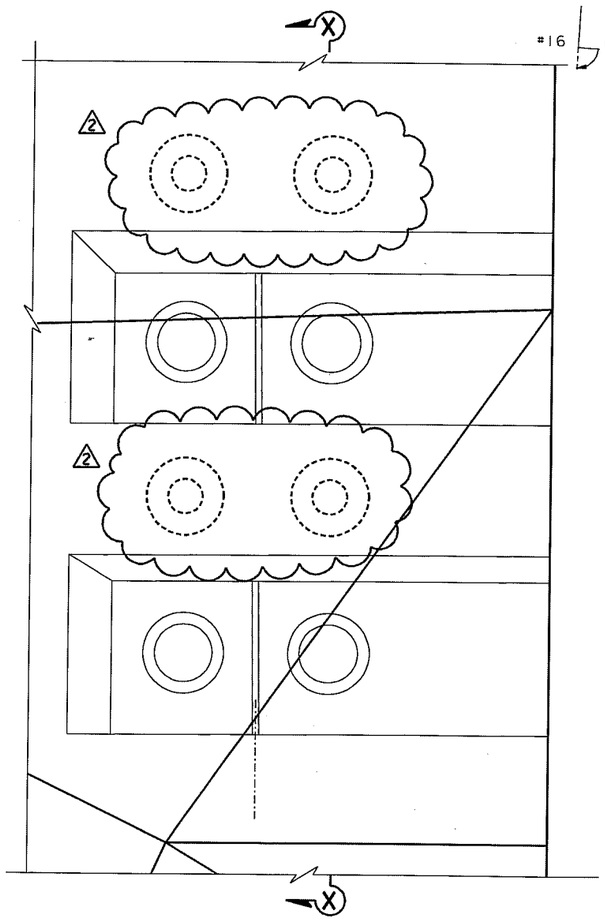

1 DETAIL S
1:10

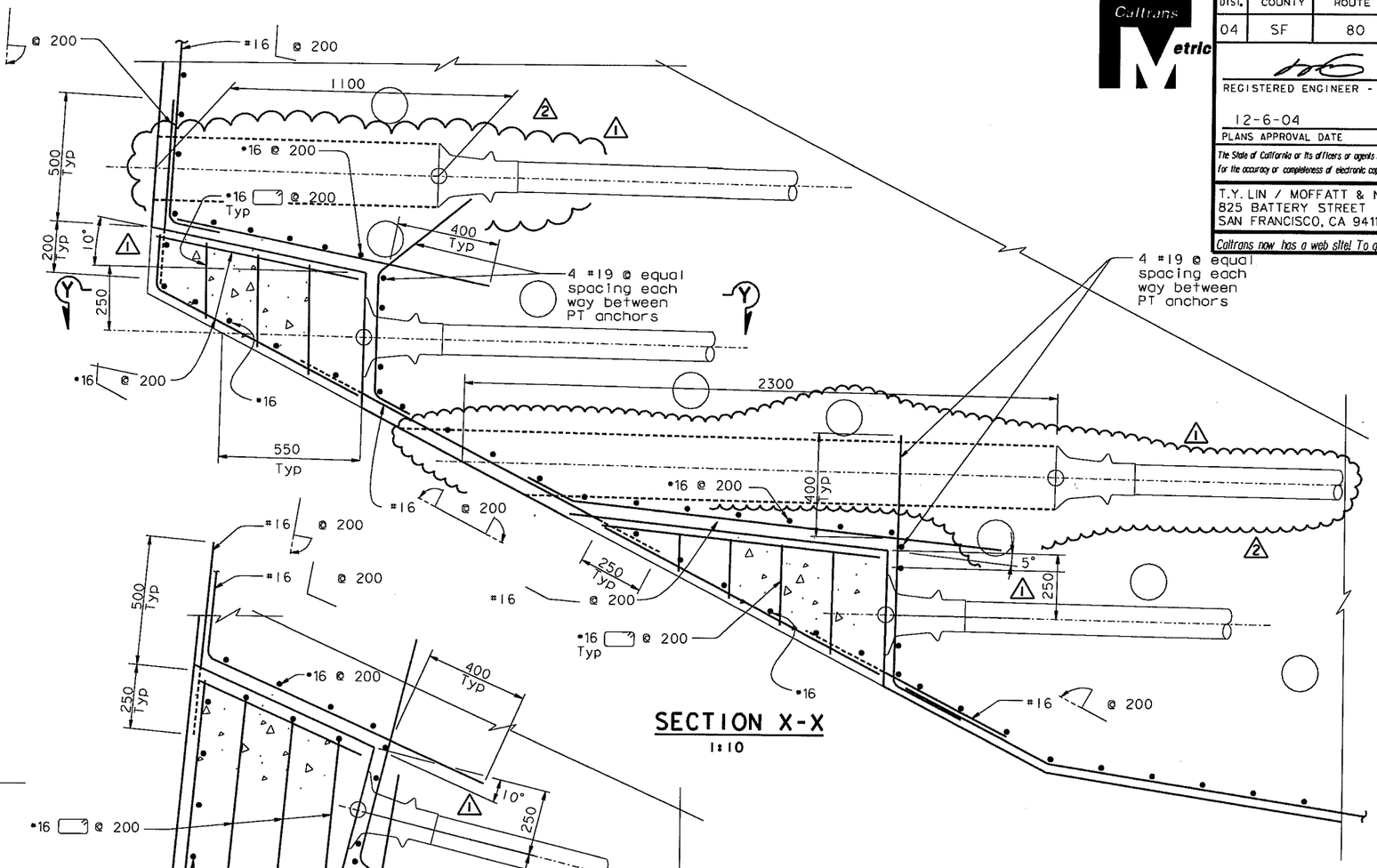

SECTION X-X
1:10

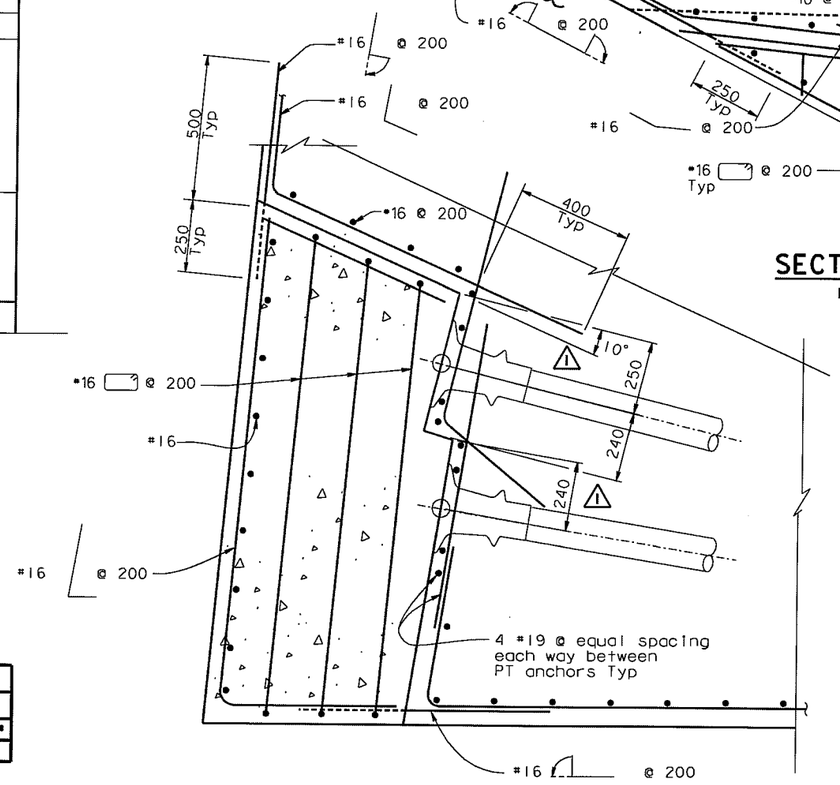

SECTION Y-Y
1:10

REGISTERED PROFESSIONAL ENGINEER James P. Duxbury No. C 64677 Exp. 06/30/07 CIVIL STATE OF CALIFORNIA

FOR REVISIONS ONLY

MARK	DATE	DESCRIPTIONS	BY	CH'D	CCO#
2	01/31/07	CORROSION PROTECTION	JD	AS	16
1	07/21/06	W2 CAP BEAM ISD	JD	NV	23

REVISIONS

CONTRACT CHANGE ORDER NO. 16
SHEET 10 OF 12

NOTES:

1. For additional details, see "W2 Cap Beam Blockout Details No. 2" sheet.
2. Cap beam reinforcement not shown for clarity.
3. Local confining spiral reinforcement per tendon anchors shall be provided by PT tendon hardware supplier.

ALL DIMENSIONS ARE IN MILLIMETERS UNLESS OTHERWISE SHOWN

R. Valizadeh/V. Toan/Y.L./W.L./F.C.
DESIGN OVERSIGHT
Roger Valizadeh / Vong Toan / Y Liu
SIGN OFF DATE 01/31/07
Rev. Date: 5-18-98

DESIGN	BY J. Sun	CHECKED M. Chen	
DETAILS	BY J. Duxbury	CHECKED M. Chen	
QUANTITIES	BY S. Shi	CHECKED D. Harrison	

PREPARED FOR THE STATE OF CALIFORNIA DEPARTMENT OF TRANSPORTATION

R. Manzanarez
PROJECT ENGINEER

BRIDGE NO. 34-0006L/R
KILOMETER POST 13.2/13.9

SAN FRANCISCO OAKLAND BAY BRIDGE
EAST SPAN SEISMIC SAFETY PROJECT
SELF-ANCHORED SUSPENSION BRIDGE
(SUPERSTRUCTURE & TOWER)

W2 CAP BEAM BLOCKOUT DETAILS NO. 10

ORIGINAL SCALE IN MILLIMETERS FOR REDUCED PLANS 0 10 20 30 40 50 60 70 80 90 100

CU 04
EA 0120F1

DISREGARD PRINTS BEARING EARLIER REVISION DATES

REVISION DATES (PRELIMINARY STAGE ONLY) 05/31/01 04/08/02 07/01/02 12/19/02

SHEET 90R2 OF

FILE => I:\bb\04-012001\sas\contract plans and cco\cco\in progress\cco#16\aecbb10.dgn

100 % PS&E

USERNAME => visitor DATE PLOTTED => 15 MAR 2007 TIME PLOTTED => 15:34:45

DIST.	COUNTY	ROUTE	KILOMETER POST TOTAL PROJECT	SHEET NO.	TOTAL SHEETS
04	SF	80	13.2/13.9	508R2	1204

REGISTERED ENGINEER - CIVIL

12-6-04
PLANS APPROVAL DATE

REGISTERED PROFESSIONAL ENGINEER John Sun No. C 54648 Exp. 12/31/05 CIVIL STATE OF CALIFORNIA

The State of California or its officers or agents shall not be responsible for the accuracy or completeness of electronic copies of this plan sheet.

T.Y. LIN / MOFFATT & NICHOL
825 BATTERY STREET
SAN FRANCISCO, CA 94111

Caltrans now has a web site! To get to the web site, go to: http://www.dot.ca.gov

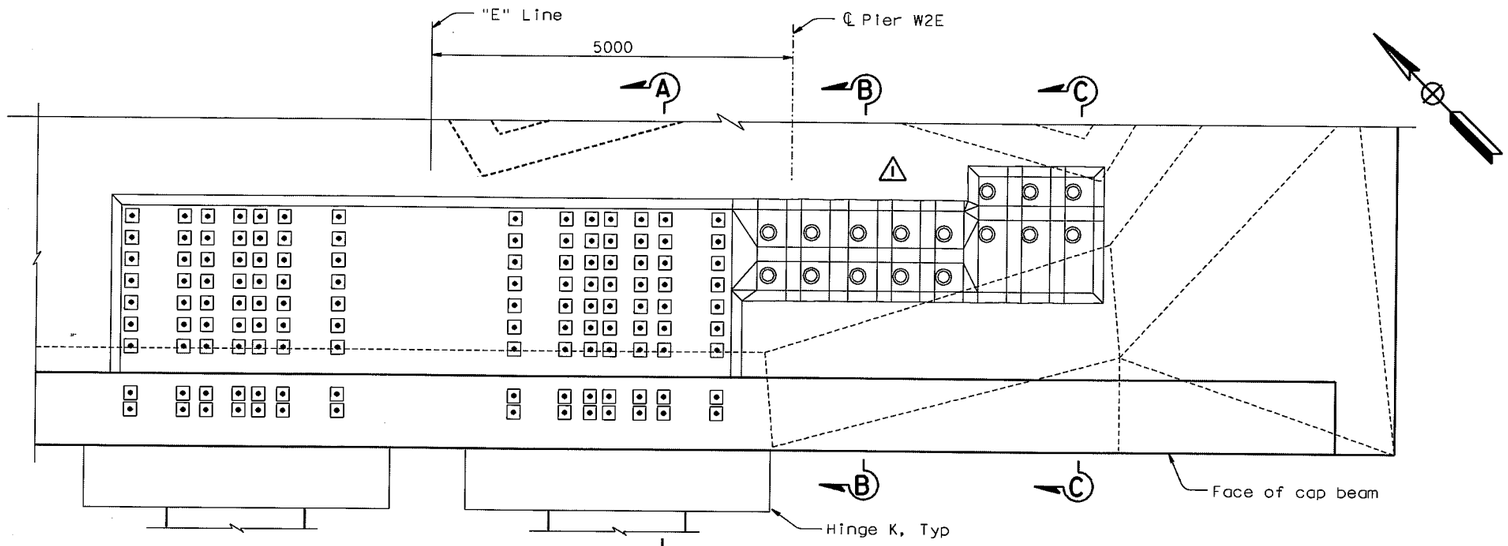

PLAN A
1:40
(36 Dia post-tension rod and 12-15 Dia strand tendon blockouts)

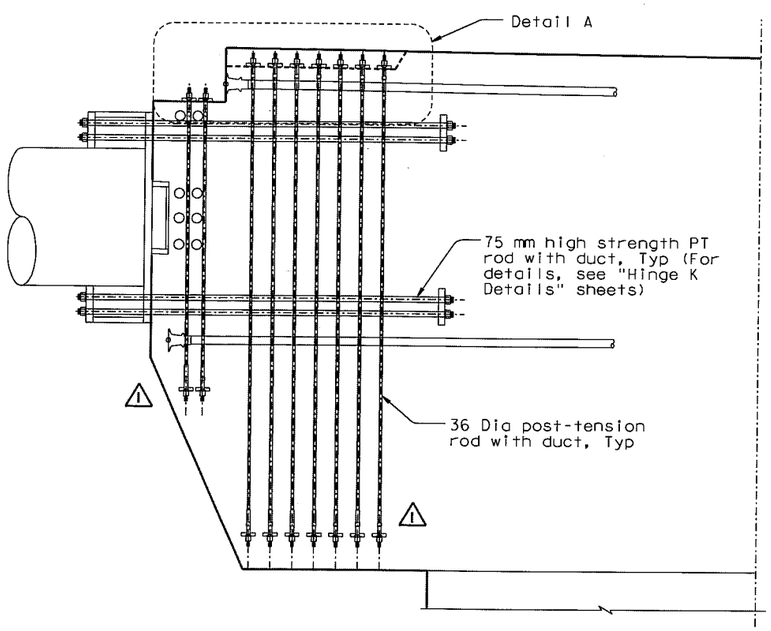

SECTION A-A
1:40

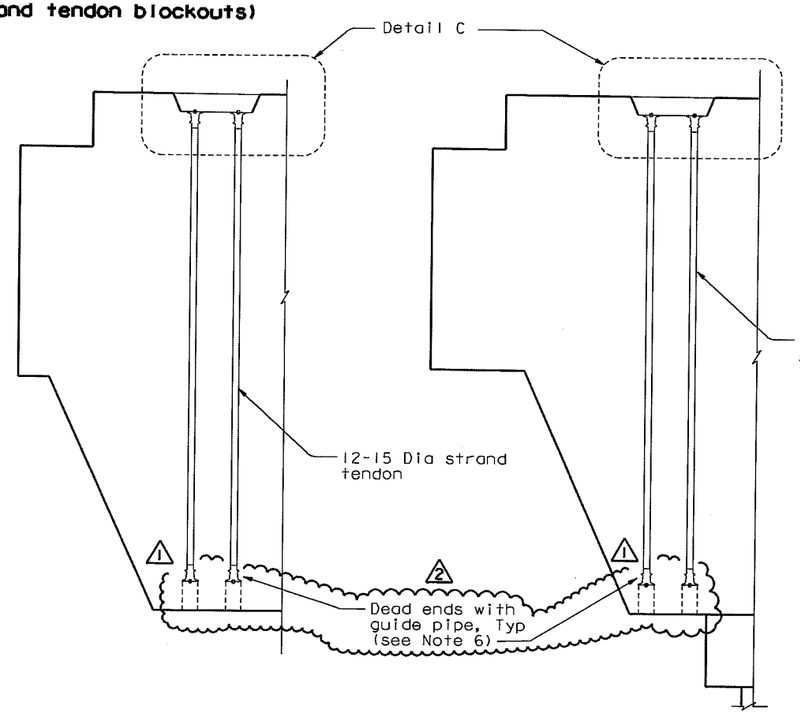

SECTION B-B
1:40

SECTION C-C
1:40

ALL DIMENSIONS ARE IN MILLIMETERS UNLESS OTHERWISE SHOWN

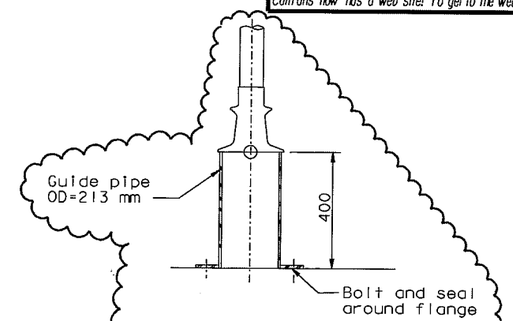

2 **DEAD END GUIDE PIPE**
NTS (see Note 6)

NOTES:

1. Cap beam reinforcement not shown for clarity.
2. Local confining spiral reinforcement for tendon anchors shall be provided by PT tendon hardware supplier.
3. Blockouts on the cap beam "E" Line shown, blockouts on the cap beam "W" Line similar.
4. 1 For Details A and C, see "W2 Cap Beam Blockout Details No. 12" sheet.
5. For additional prestressing details, see "Prestressing Notes" sheet.
6. 2 Contractor shall coordinate the dead end guide pipe details with the PT Supplier and shall submit them to the Engineer for review and approval. Contractor shall grout the guide pipe after stressing operations have been completed.

REGISTERED PROFESSIONAL ENGINEER Jonathan R. Duxbury No. C 64677 Exp. 06/30/07 CIVIL STATE OF CALIFORNIA

FOR REVISIONS ONLY

MARK	DATE	DESCRIPTIONS	BY	CH'D	CCO#
2	01/31/07	CORROSION PROTECTION	JD	AS	16
1	07/21/06	W2 CAP BEAM ISD	JD	NV	23

REVISIONS

CONTRACT CHANGE ORDER NO. 16
SHEET 11 OF 12

100 % PS&E

SAN FRANCISCO OAKLAND BAY BRIDGE
EAST SPAN SEISMIC SAFETY PROJECT
SELF-ANCHORED SUSPENSION BRIDGE
(SUPERSTRUCTURE & TOWER)

W2 CAP BEAM BLOCKOUT DETAILS NO. 11

R. Valizadeh/V. Toan/Y.L./W.L./F.C.
DESIGN OVERSIGHT
Ron Valizadeh / Vong Toan / Y. Lin
SIGN OFF DATE 01/31/07
Rev. Date: 5-18-98

	BY	CHECKED
DESIGN	J. Sun	M. Chen
DETAILS	J. Duxbury	M. Chen
QUANTITIES	S. Shi	D. Harrison

PREPARED FOR THE STATE OF CALIFORNIA DEPARTMENT OF TRANSPORTATION

R. Manzanarez
PROJECT ENGINEER

BRIDGE NO. 34-0006L/R
KILOMETER POST 13.2/13.9

CU 04
EA 0120F1

DISREGARD PRINTS BEARING EARLIER REVISION DATES 05/31/01 01/08/02 01/21/02 12/19/02

SHEET 91R2 OF

ORIGINAL SCALE IN MILLIMETERS FOR REDUCED PLANS 0 10 20 30 40 50 60 70 80 90 100

FILE => I:\bb\04-012001\sas\contract plans and cco\cco\in progress\cco#16\aecbb11.dgn

USERNAME => visitor DATE PLOTTED => 15 MAR 2007 TIME PLOTTED => 15:35:58

DIST.	COUNTY	ROUTE	KILOMETER POST TOTAL PROJECT	SHEET NO.	TOTAL SHEETS
04	SF	80	13.2/13.9	509R2	1204

REGISTERED ENGINEER - CIVIL

12-6-04
PLANS APPROVAL DATE

REGISTERED PROFESSIONAL ENGINEER John Sun No. C 54648 Exp. 12/31/05 CIVIL STATE OF CALIFORNIA

The State of California or its officers or agents shall not be responsible for the accuracy or completeness of electronic copies of this plan sheet.

T.Y. LIN / MOFFATT & NICHOL
825 BATTERY STREET
SAN FRANCISCO, CA 94111

Caltrans now has a web site! To get to the web site, go to: http://www.dot.ca.gov

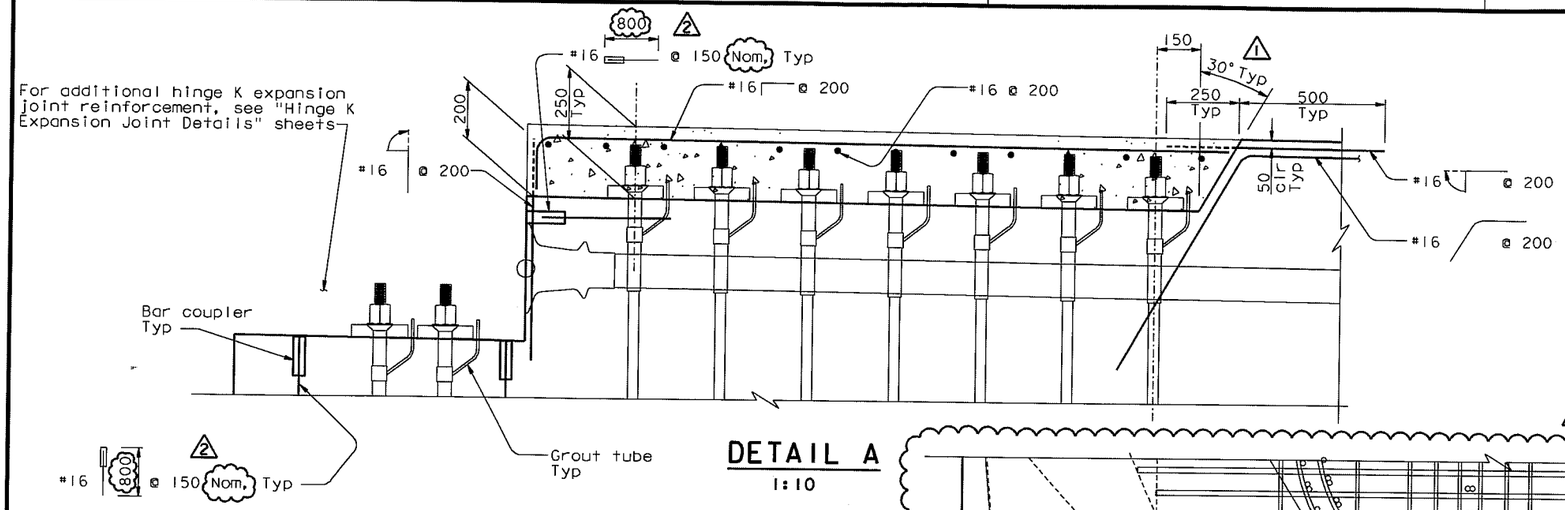

DETAIL A
1:10

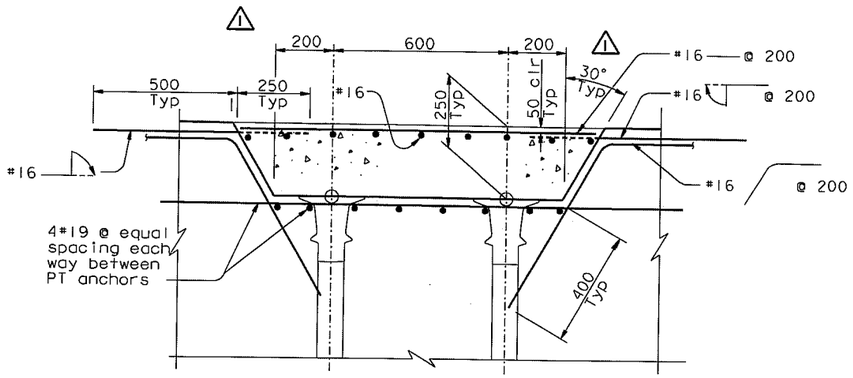

DETAIL C
1:10

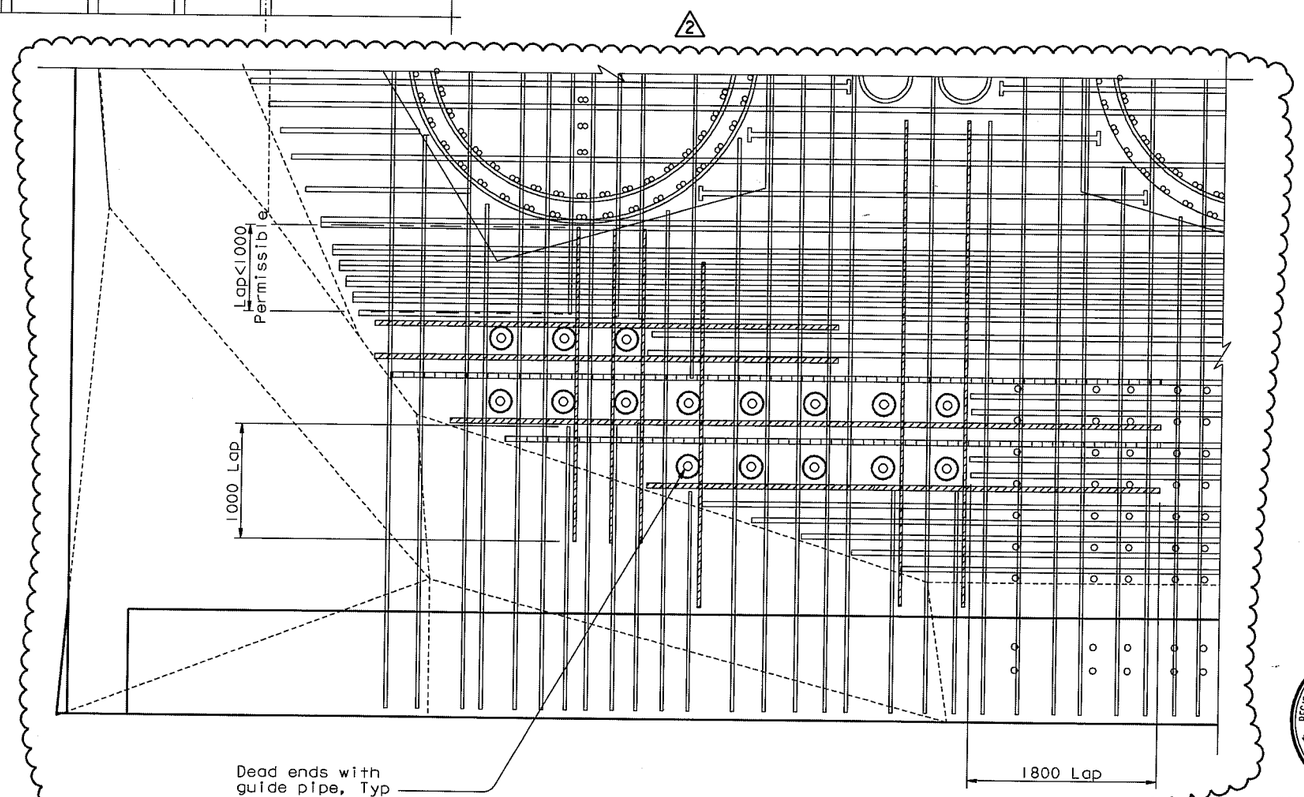

DEAD END GUIDE PIPE BOTTOM MAT REINFORCEMENT ALTERNATE
NTS

NOTES:

1. For additional details, see "W2 Cap Beam Blockout Details No. 11" sheet.
2. Cap beam reinforcement not shown for clarity.
3. Local confining spiral reinforcement per tendon anchors shall be provided by PT tendon hardware supplier.

REGISTERED PROFESSIONAL ENGINEER John Duxbury No. C 64677 Exp. 06/30/07 CIVIL STATE OF CALIFORNIA

FOR REVISIONS ONLY

MARK	DATE	DESCRIPTIONS	BY	CH'D	CCO#
2	01/31/07	CORROSION PROTECTION	JD	AS	16
1	07/21/06	W2 CAP BEAM ISD	JD	NV	23

REVISIONS

CONTRACT CHANGE ORDER NO. 16
SHEET 12 OF 12

100 % PS&E

ALL DIMENSIONS ARE IN MILLIMETERS UNLESS OTHERWISE SHOWN

R. Valizadeh/V. Toan/Y.L./W.L./F.C.
DESIGN OVERSIGHT
SIGN OFF DATE 01/31/07

DESIGN	BY J. Sun	CHECKED M. Chen	
DETAILS	BY J. Duxbury	CHECKED M. Chen	
QUANTITIES	BY S. Shi	CHECKED D. Harrison	

Rev. Date: 5-18-98

ORIGINAL SCALE IN MILLIMETERS FOR REDUCED PLANS 0 10 20 30 40 50 60 70 80 90 100

PREPARED FOR THE STATE OF CALIFORNIA DEPARTMENT OF TRANSPORTATION

R. Manzanarez
PROJECT ENGINEER

CU 04
EA 0120F1

BRIDGE NO. 34-0006L/R
KILOMETER POST 13.2/13.9

DISREGARD PRINTS BEARING EARLIER REVISION DATES

SAN FRANCISCO OAKLAND BAY BRIDGE
EAST SPAN SEISMIC SAFETY PROJECT
SELF-ANCHORED SUSPENSION BRIDGE
(SUPERSTRUCTURE & TOWER)

W2 CAP BEAM BLOCKOUT DETAILS NO. 12

REVISION DATES (PRELIMINARY STAGE ONLY) 05/17/01 04/09/02 07/09/02 12/15/02

SHEET 92R2 OF

FILE => I:\bb\04-0120F1\sas\contract plans and cco\cco\in progress\cco#16\decbb12.dgn

USERNAME => visitor DATE PLOTTED => 15 MAR 2007 TIME PLOTTED => 15:37:14

Plan Sheet List

Drawing No	Rev	Date	Description	Location	SubLoc Type	Discipline	Status	Comments
0462	2	31-Jan-2007	W2 Cap Beam Post-Tensioning Details No. 2	016			A	045R2 - 0462R2 - CCO 016
0463	2	31-Jan-2007	W2 Cap Beam Post-Tensioning Details No. 2	016			A	046R2 - 0463R2 - CCO 016
0466	3	16-Feb-2007	W2 Cap Beam Post-Tensioning Details No. 5	016			A	049R3 - 0466R3 - CCO 027
0468	3	16-Feb-2007	W2 Cap Beam Post-Tensioning Details No. 7	016			A	051R3 - 0468R3 - CCO 027
0470	3	16-Feb-2007	W2 Cap Beam Post-Tensioning Details No. 9	016			A	053R3 - 0470R3 - CCO 034
0473	3	16-Feb-2007	W2 Cap Beam Post-Tensioning Details No. 12	016			A	056R3 - 0473R3 - CCO 034
0499	2	31-Jan-2007	W2 Cap Beam Blockout Details No. 2	016			A	082R2 - 0499R2 - CCO 016
0506	2	31-Jan-2007	W2 Cap Beam Blockout Details No. 9	016			A	089R2 - 0506R2 - CCO 016
0507	2	31-Jan-2007	W2 Cap Beam Blockout Details No. 10	016			A	090R2 - 0507R2 - CCO 016
0508	2	31-Jan-2007	W2 Cap Beam Blockout Details No. 11	016			A	091R2 - 0508R2 - CCO 016
0509	2	31-Jan-2007	W2 Cap Beam Blockout Details No. 12	016			A	092R2 - 0509R2 - CCO 016

STATE OF CALIFORNIA - DEPARTMENT OF TRANSPORTATION

CONTRACT CHANGE ORDER MEMORANDUM

TO: PETER SIEGENTHALER / Gary Pursell	FILE: **E.A.** 04 - 0120F4
FROM: Gary Pursell	**CO-RTE-PM** SF-80-13.2/13.9
	FED. NO.
CCO#: **17** SUPPLEMENT#: **0** Category Code: **AWZZ**	CONTINGENCY BALANCE (incl. this change) **$148,610,190.00**
COST: **$150,000.00** INCREASE ☑ DECREASE ☐	HEADQUARTERS APPROVAL REQUIRED? ☐ YES ☑ NO
SUPPLEMENTAL FUNDS PROVIDED: **$107,600.00**	IS THIS REQUEST IN ACCORDANCE WITH ENVIRONMENTAL DOCUMENTS? ☑ YES ☐ NO
CCO DESCRIPTION: Computer Software, Equipment, & Support	**PROJECT DESCRIPTION:** CONSTRUCT SELF-ANCHORED SUSPENSION BRIDGE

LOCATION: IN SAN FRANCISCO COUNTY IN SAN FRANCISCO FROM 0.6 KM TO 1.3 KM EAST OF THE YERBA BUENA TUNNEL EAST PORTAL

THIS CHANGE ORDER PROVIDES FOR:

Providing additional hardware, software, software licenses, CPM training, and software customization not included in Section 10-1.20, "Document Management System," Section 10-1.16, "Working Drawing Campus," and Section 10-1.13, "Progress Schedule (Critical Path Method)," of the Contract Special Provisions.

Additional hardware, software, software licenses, CPM training, and software customization are required to properly support and implement contract required software. This work is anticipated in Section 10-1.20, "Document Management System," of the Contract Special Provisions.

This work is not covered by any contract items. Therefore, payment for this work will be at Extra Work at Force Account for an estimated cost of $150,000.00, which can be financed from the contingency fund and supplemental funds of which $107,600.00 were allotted for this work.

Estimated cost of Extra Work at Force Account $150,000.00

Authority to Proceed was issued on 5/26/2006.

No adjustment of contract time is warranted, as this change does not affect the controlling operation.

CONCURRED BY:

Construction Engineer:	Gary Pursell	Date6/12/2006
Bridge Engineer:		Date
FHWA Representative:		Date
Project Engineer:		Date
Other (specify):		Date
		Date
		Date
District Prior Approval By:		Date
HQ (Issue Approve) By:		Date
Resident Engineer's Signature:	Gary Pursell	Date 7/12/06

ESTIMATE OF COST

	THIS REQUEST	TOTAL TO DATE
ITEMS	$0.00	$0.00
FORCE ACCOUNT	$150,000.00	$150,000.00
AGREED PRICE	$0.00	$0.00
ADJUSTMENT	$0.00	$0.00
TOTAL	$150,000.00	$150,000.00

FEDERAL PARTICIPATION

☐ PARTICIPATING ☐ PARTICIPATING IN PART ☑ NONE
☐ NON-PARTICIPATING (MAINTENANCE) ☐ NON-PARTICIPATING

FEDERAL SEGREGATION (if more than one Funding Source or P.I.P. type)
☐ CCO FUNDED PER CONTRACT ☐ CCO FUNDED AS FOLLOWS

FEDERAL FUNDING SOURCE	PERCENT

STATE OF CALIFORNIA - DEPARTMENT OF TRANSPORTATION

CONTRACT CHANGE ORDER

Change Requested by: Engineer

CCO: 17	Suppl. No. 0	Contract No. 04 - 0120F4	Road SF-80-13.2/13.9	FED. AID LOC.:

To: **AMERICAN BRIDGE/FLUOR ENTERPRISES INC A JOINT VENTURE**

You are directed to make the following changes from the plans and specifications or do the following described work not included in the plans and specifications for this contract. ***NOTE: This change order is not effective until approved by the Engineer.***

Description of work to be done, estimate of quantities and prices to be paid. (Segregate between additional work at contract price, agreed price and force account.) Unless otherwise stated, rates for rental of equipment cover only such time as equipment is actually used and no allowance will be made for idle time. This last percentage shown is the net accumulated increase or decrease from the original quantity in the Engineer's Estimate.

Extra Work at Force Account:

DOCUMENT MANAGEMENT SYSTEM HARDWARE AND SOFTWARE

In accordance with Section 10-1.20, "Document Management System," of the Contract Special Provisions reimburse the Contractor for additional hardware, software, software licenses, and software customization approved by the Engineer.

WORKING DRAWING CAMPUS/CONSTRUCTION OFFICE HARDWARE AND SOFTWARE

Provide additional hardware, software, and software licenses approved by the Engineer and not included in Section 10-1.16, "Working Drawing Campus," of the Contract Special Provisions.

CRITICAL PATH METHOD (CPM) HARDWARE AND SOFTWARE

Provide additional hardware, software, software licenses, and CPM training approved by the Engineer and not included in Section 10-1.13, "Progress Schedule (Critical Path Method)," of the Contract Special Provisions.

Estimated cost of Extra Work at Force Account $150,000.00

Estimated Cost: **Increase** ☑ **Decrease** ☐ **$150,000.00**

By reason of this order the time of completion will be adjusted as follows: 0 days

Submitted by

Signature		Date
DARRYL SCHRAM FOR GARY PURSELL	**Resident Engineer:** Gary Pursell	6/23/06

Approval Recommended by

Signature		Date
Gary Pursell	**Construction Engineer:** Gary Pursell	7/6/06

Engineer Approval by

Signature		Date
Gary Pursell	**(Print name and title)** Gary Pursell - Construction Engineer	7/6/06

We the undersigned contractor, have given careful consideration to the change proposed and agree, if this proposal is approved, that we will provide all equipment, furnish the materials, except as may otherwise be noted above, and perform all services necessary for the work above specified, and will accept as full payment therefor the prices shown above.

NOTE: If you, the contractor, do not sign acceptance of this order, your attention is directed to the requirements of the specifications as to proceeding with the ordered work and filing a written protest within the time therein specified.

Contractor Acceptance by

Signature		Date
Louis B. Wehar Jr.	**(Print name and title)** LOUIS B. WEHAR JR. ASST. OPERS MNGR	6/30/06

STATE OF CALIFORNIA - DEPARTMENT OF TRANSPORTATION

CONTRACT CHANGE ORDER MEMORANDUM

TO: Peter Siegenthaler / Gary Pursell	FILE: E.A. 04 - 0120F4
FROM: Gary Pursell	CO-RTE-PM SF-80-13.2/13.9
	FED. NO.
CCO#: 17 SUPPLEMENT#: 1 Category Code: AWZZ	CONTINGENCY BALANCE (incl. this change) $145,599,880.00
COST: $350,000.00 INCREASE ☑ DECREASE ☐	HEADQUARTERS APPROVAL REQUIRED? ☑ YES ☐ NO
SUPPLEMENTAL FUNDS PROVIDED: $0.00	IS THIS REQUEST IN ACCORDANCE WITH ENVIRONMENTAL DOCUMENTS? ☑ YES ☐ NO
CCO DESCRIPTION: Provide Additional Funds	**PROJECT DESCRIPTION:** CONSTRUCT SELF-ANCHORED SUSPENSION BRIDGE

Original Contract Time:	Time Adj. This Change:	Previously Approved CCO Time Adjustments:	Percentage Time Adjusted: (including this change)	Total # of Unreconciled Deferred Time CCO(s): (including this change)
2490 Day(s)	0 Day(s)	0 Day(s)	0 %	0

THIS CHANGE ORDER PROVIDES FOR:

Providing additional funds to procure extra hardware, software, software licenses and software customization not included in Section 10-1.20, "Document Management System," Section 10-1.16, "Working Drawing Campus," and Section 10-1.13, "Progress Schedule (Critical Path Method)," of the Contract Special Provisions.

Additional hardware, software, software licenses and software customization are required to properly support and implement contract required software to keep the project on schedule and reduce potential delays.

The additional costs for these incidentals are as follows:

1. Hardware
The additional hardware involved in this change includes additional blank tapes and drives for the tape backup system used for the PMIV system, beyond what was called for in the Special Provisions. The tapes in the tape backup system occasionally need to be replaced since the tapes degrade over extended use. These tapes have a limited life span and will have no value after the project is complete. In addition, it should be noted that no computers or servers have, or will be, requested through this change order.

2. Software
The additional software includes the rental of one additional Primavera License needed to review the progress schedules, beyond the requirement shown in the Special Provisions. Due to the size of this project, there are many Department schedulers (Staff and Consultant) that review the project schedule. This software is needed to supplement the scheduling staff to review any potential time impacts to the project and analyze alternatives to keep any impacts to the project down to a minimum. This software will be returned to the Contractor at the end of the project after disputes are resolved.

3. PMIV licenses and yearly maintenance dues
The bulk of this change order is to provide for additional PMIV licenses and corresponding maintenance fees for additional Department staff and consultants, as well as partners in design, upper management, and material inspectors being placed overseas. The Special Provisions called for a limited amount of PMIV licenses to be available to the Department. After the project started, it was observed that the amount of licenses called for in the contract would not be enough to cover all Department essential staff to use the PMIV document control system. In addition, the spec did not included provisions to pay for the yearly maintenance fees. Copies of the actual and projected amount of PMIV licenses are located in the project files.

ADA Notice: For individuals with sensory disabilities, this document is available in alternate formats. For information call: (916) 654-6410 or TDD (916) 654-3880 or write Records and Forms Management, 1120 N Street, MS-89, Sacramento, CA 95814.

This additional work is not covered by any contract items. Therefore, payment for this work will be at Extra Work at Force Account for an estimated additional cost of $350,000.00, totaling $500,000.00 for the change order, which can be financed from the contingency fund and supplemental funds of which $107,600.00 were allotted for this work. A cost analysis is located in the project files.

No adjustment of contract time is warranted, as this change does not affect the controlling operation.

This change order has received concurrence from the Program Construction Engineer, Pete Siegenthaler (11/03/06), Project Manager, Ken Terpstra (11/04/06) and HQ Liaison, Rob Kobal (11/01/06). This change order supplement received an HQ (Issue & Approve) from Ken Darby on 11/15/06 and is attached for your reference. Maintenance concurrence is not required for this change does not affect the permanent facility.

CONCURRED BY:			
Construction Engineer:	Gary Pursell	Date	11/1/06
Bridge Engineer:		Date	
Project Engineer:		Date	
Project Manager:	Ken Terpstra	Date	11/4/06
FHWA Rep.:		Date	
Environmental:		Date	
Other (specify):	PCE, Pete Siegenthaler	Date	11/1/06
Other (specify):	HQ, Rob Kobal	Date	11/1/06
District Prior Approval By:		Date	
HQ (Issue Approve) By:	HQ I&A, Ken Darby	Date	11/15/06
Resident Engineer's Signature: Gary Pursell		Date	11/15/06

ESTIMATE OF COST

	THIS REQUEST	TOTAL TO DATE
ITEMS	$0.00	$0.00
FORCE ACCOUNT	$350,000.00	$500,000.00
AGREED PRICE	$0.00	$0.00
ADJUSTMENT	$0.00	$0.00
TOTAL	$350,000.00	$500,000.00

FEDERAL PARTICIPATION

☐ PARTICIPATING ☐ PARTICIPATING IN PART ☑ NONE
☐ NON-PARTICIPATING (MAINTENANCE) ☐ NON-PARTICIPATING

FEDERAL SEGREGATION (if more than one Funding Source or P.I.P. type)
☑ CCO FUNDED PER CONTRACT ☐ CCO FUNDED AS FOLLOWS

FEDERAL FUNDING SOURCE	PERCENT

ADA Notice: For individuals with sensory disabilities, this document is available in alternate formats. For information call: (916) 654-6410 or TDD (916) 654-3880 or write Records and Forms Management, 1120 N Street, MS-89, Sacramento, CA 95814.

STATE OF CALIFORNIA - DEPARTMENT OF TRANSPORTATION

CONTRACT CHANGE ORDER

Change Requested by: Engineer

CCO: 17	Suppl. No. 1	Contract No. 04 - 0120F4	Road SF-80-13.2/13.9	FED. AID LOC.:

To: **AMERICAN BRIDGE/FLUOR ENTERPRISES INC A JOINT VENT**

You are directed to make the following changes from the plans and specifications or do the following described work not included in the plans and specifications for this contract. ***NOTE: This change order is not effective until approved by the Engineer.***

Description of work to be done, estimate of quantities and prices to be paid. (Segregate between additional work at contract price, agreed price and force account.) Unless otherwise stated, rates for rental of equipment cover only such time as equipment is actually used and no allowance will be made for idle time. This last percentage shown is the net accumulated increase or decrease from the original quantity in the Engineer's Estimate.

Extra Work at Force Account:

Provide additional funds.....

Estimated cost of Extra Work at Force Account $350,000.00

Estimated Cost: Increase ☑ Decrease ☐ **$350,000.00**

By reason of this order the time of completion will be adjusted as follows: 0 days

Submitted by

Signature Gary Pursell	Resident Engineer: Gary Pursell	Date 10/27/06

Approval Recommended by

Signature Gary Pursell	Construction Engineer: Gary Pursell	Date 10/27/06

Engineer Approval by

Signature P Siegenthaler	(Print name and title) PETER SIEGENTHALER - Chief	Date 11/16/06

We the undersigned contractor, have given careful consideration to the change proposed and agree, if this proposal is approved, that we will provide all equipment, furnish the materials, except as may otherwise be noted above, and perform all services necessary for the work above specified, and will accept as full payment therefor the prices shown above.

NOTE: If you, the contractor, do not sign acceptance of this order, your attention is directed to the requirements of the specifications as to proceeding with the ordered work and filing a written protest within the time therein specified.

Contractor Acceptance by

Signature NOT REQUIRED	(Print name and title)	Date

STATE OF CALIFORNIA - DEPARTMENT OF TRANSPORTATION

CONTRACT CHANGE ORDER MEMORANDUM

TO: Peter Siegenthaler / Gary Pursell	FILE: E.A. 04 - 0120F4
FROM: Gary Pursell	CO-RTE-PM SF-80-13.2/13.9
	FED. NO.
CCO#: 17 SUPPLEMENT#: 1 Category Code: AWZZ	CONTINGENCY BALANCE (incl. this change) $145,599,880.00
COST: $350,000.00 INCREASE ☑ DECREASE ☐	HEADQUARTERS APPROVAL REQUIRED? ☑ YES ☐ NO
SUPPLEMENTAL FUNDS PROVIDED: $0.00	IS THIS REQUEST IN ACCORDANCE WITH ENVIRONMENTAL DOCUMENTS? ☑ YES ☐ NO
CCO DESCRIPTION: Provide Additional Funds	**PROJECT DESCRIPTION:** CONSTRUCT SELF-ANCHORED SUSPENSION BRIDGE

Original Contract Time:	Time Adj. This Change:	Previously Approved CCO Time Adjustments:	Percentage Time Adjusted: (including this change)	Total # of Unreconciled Deferred Time CCO(s): (including this change)
2490 Day(s)	0 Day(s)	0 Day(s)	0 %	0

THIS CHANGE ORDER PROVIDES FOR:

Providing additional funds to procure extra hardware, software, software licenses and software customization not included in Section 10-1.20, "Document Management System," Section 10-1.16, "Working Drawing Campus," and Section 10-1.13, "Progress Schedule (Critical Path Method)," of the Contract Special Provisions.

Additional hardware, software, software licenses and software customization are required to properly support and implement contract required software to keep the project on schedule and reduce potential delays.

The additional costs for these incidentals are as follows:

1. Hardware
The additional hardware involved in this change includes additional blank tapes and drives for the tape backup system used for the PMIV system, beyond what was called for in the Special Provisions. The tapes in the tape backup system occasionally need to be replaced since the tapes degrade over extended use. These tapes have a limited life span and will have no value after the project is complete. In addition, it should be noted that no computers or servers have, or will be, requested through this change order.

2. Software
The additional software includes the rental of one additional Primavera License needed to review the progress schedules, beyond the requirement shown in the Special Provisions. Due to the size of this project, there are many Department schedulers (Staff and Consultant) that review the project schedule. This software is needed to supplement the scheduling staff to review any potential time impacts to the project and analyze alternatives to keep any impacts to the project down to a minimum. This software will be returned to the Contractor at the end of the project after disputes are resolved.

3. PMIV licenses and yearly maintenance dues
The bulk of this change order is to provide for additional PMIV licenses and corresponding maintenance fees for additional Department staff and consultants, as well as partners in design, upper management, and material inspectors being placed overseas. The Special Provisions called for a limited amount of PMIV licenses to be available to the Department. After the project started, it was observed that the amount of licenses called for in the contract would not be enough to cover all Department essential staff to use the PMIV document control system. In addition, the spec did not included provisions to pay for the yearly maintenance fees. Copies of the actual and projected amount of PMIV licenses are located in the project files.

ADA Notice: For individuals with sensory disabilities, this document is available in alternate formats. For information call: (916) 654-6410 or TDD (916) 654-3880 or write Records and Forms Management, 1120 N Street, MS-89, Sacramento, CA 95814.

This additional work is not covered by any contract items. Therefore, payment for this work will be at Extra Work at Force Account for an estimated additional cost of $350,000.00, totaling $500,000.00 for the change order, which can be financed from the contingency fund and supplemental funds of which $107,600.00 were allotted for this work. A cost analysis is located in the project files.

No adjustment of contract time is warranted, as this change does not affect the controlling operation.

This change order has received concurrence from the Program Construction Engineer, Pete Siegenthaler (11/03/06), Project Manager, Ken Terpstra (11/04/06) and HQ Liaison, Rob Kobal (11/01/06). This change order supplement received an HQ (Issue & Approve) from Ken Darby on 11/15/06 and is attached for your reference. Maintenance concurrence is not required for this change does not affect the permanent facility.

CONCURRED BY:			
Construction Engineer:	Gary Pursell	Date	11/1/06
Bridge Engineer:		Date	
Project Engineer:		Date	
Project Manager:	Ken Terpstra	Date	11/4/06
FHWA Rep.:		Date	
Environmental:		Date	
Other (specify):	PCE, Pete Siegenthaler	Date	11/1/06
Other (specify):	HQ, Rob Kobal	Date	11/1/06
District Prior Approval By:		Date	
HQ (Issue Approve) By:	HQ I&A, Ken Darby	Date	11/15/06
Resident Engineer's Signature: Gary Pursell		Date	11/15/06

ESTIMATE OF COST

	THIS REQUEST	TOTAL TO DATE
ITEMS	$0.00	$0.00
FORCE ACCOUNT	$350,000.00	$500,000.00
AGREED PRICE	$0.00	$0.00
ADJUSTMENT	$0.00	$0.00
TOTAL	$350,000.00	$500,000.00

FEDERAL PARTICIPATION

☐ PARTICIPATING ☐ PARTICIPATING IN PART ☑ NONE
☐ NON-PARTICIPATING (MAINTENANCE) ☐ NON-PARTICIPATING

FEDERAL SEGREGATION (if more than one Funding Source or P.I.P. type)
☑ CCO FUNDED PER CONTRACT ☐ CCO FUNDED AS FOLLOWS

FEDERAL FUNDING SOURCE	PERCENT

ADA Notice: For individuals with sensory disabilities, this document is available in alternate formats. For information call: (916) 654-6410 or TDD (916) 654-3880 or write Records and Forms Management, 1120 N Street, MS-89, Sacramento, CA 95814.

STATE OF CALIFORNIA - DEPARTMENT OF TRANSPORTATION

CONTRACT CHANGE ORDER MEMORANDUM

TO: Pete Siegenthaler, Prin. TE / Gary Pursell, P.E., Sup T.E.	FILE: **E.A.** 04 - 0120F4
FROM: Gary Pursell, P.E., Sup.T.E.	**CO-RTE-PM** SF-80-13.2/13.9
	FED. NO.
CCO#: **17** SUPPLEMENT#: **2** Category Code: **CXSX**	CONTINGENCY BALANCE (incl. this change) **$142,320,043.34**
COST: **$480,000.00** INCREASE ☑ DECREASE ☐	HEADQUARTERS APPROVAL REQUIRED? ☑ YES ☐ NO
SUPPLEMENTAL FUNDS PROVIDED: **$0.00**	IS THIS REQUEST IN ACCORDANCE WITH ENVIRONMENTAL DOCUMENTS? ☑ YES ☐ NO
CCO DESCRIPTION: Provide Add Funds for METS Integration	**PROJECT DESCRIPTION:** CONSTRUCT SELF-ANCHORED SUSPENSION BRIDGE

Original Contract Time:	Time Adj. This Change:	Previously Approved CCO Time Adjustments:	Percentage Time Adjusted: (including this change)	Total # of Unreconciled Deferred Time CCO(s): (including this change)
2490 Day(s)	**0** Day(s)	**30** Day(s)	**1** %	**0**

THIS CHANGE ORDER PROVIDES FOR:

Providing additional funds for the software, software licenses and software customization not included in Section 10-1.20, "Document Management System," Section 10-1.16, "Working Drawing Campus," and Section 10-1.13, "Progress Schedule (Critical Path Method)," of the Contract Special Provisions for inspection of work overseas.

Reviewing Section 10-1.20, "Document Management System" of the Special Provisions, the specifications do not address documentation services that are required on this contract overseas. On the SAS project, coordination with document control with METS at the fabrication facilities is required to maintain good communication and resolve issues in a timely manner to help keep the project on schedule. This supplement will implement the document management control system for METS overseas and will integrate welding reports, daily diaries and a photo database that can be retrieved quickly by Caltrans staff at the SAS project.

Payment for this supplemental change will be at Extra Work at Force Account for an estimated amount of $480,000.00, which can be financed from the contingency fund. This will result in a cumulative amount of $980,000.00 for this change order.

No adjustment of contract time is warranted, as this change order does not affect the controlling operation.

The Resident Engineer requests an Issue and Approve from the Division of Construction (HQ).

CONCURRED BY:			
Construction Engineer:	Res. Eng., Gary Pursell, Sup. TE	Date	6/21/07
Bridge Engineer:	Struct Rep, Rick Morrow, Sup TE	Date	6/21/07
Project Engineer:		Date	
Project Manager:	Proj Manager, Ken Terpstra	Date	7/19/07
FHWA Rep.:		Date	
Environmental:		Date	
Other (specify):	HQ, Rob Kobal	Date	6/25/07
Other (specify):	PCE, Pete Siegenthaler, Prin TE	Date	6/26/07
District Prior Approval By:		Date	
HQ (Issue Approve) By:	HQ, Ken Darby	Date	
Resident Engineer's Signature:	Gary Pursell	Date	7/19/07

ESTIMATE OF COST

	THIS REQUEST	TOTAL TO DATE
ITEMS	$0.00	$0.00
FORCE ACCOUNT	$480,000.00	$980,000.00
AGREED PRICE	$0.00	$0.00
ADJUSTMENT	$0.00	$0.00
TOTAL	$480,000.00	$980,000.00

FEDERAL PARTICIPATION

☐ PARTICIPATING ☐ PARTICIPATING IN PART ☑ NONE
☐ NON-PARTICIPATING (MAINTENANCE) ☐ NON-PARTICIPATING

FEDERAL SEGREGATION (if more than one Funding Source or P.I.P. type)
☑ CCO FUNDED PER CONTRACT ☐ CCO FUNDED AS FOLLOWS

FEDERAL FUNDING SOURCE	PERCENT

ADA Notice: For individuals with sensory disabilities, this document is available in alternate formats. For information call: (916) 654-6410 or TDD (916) 654-3880 or write Records and Forms Management, 1120 N Street, MS-89, Sacramento, CA 95814.

STATE OF CALIFORNIA - DEPARTMENT OF TRANSPORTATION

CONTRACT CHANGE ORDER

Change Requested by: Engineer

: 17	Suppl. No. 2	Contract No. 04 - 0120F4	Road SF-80-13.2/13.9	FED. AID LOC.:

To: AMERICAN BRIDGE/FLUOR ENTERPRISES INC A JOINT VENT

You are directed to make the following changes from the plans and specifications or do the following described work not included in the plans and specifications for this contract. ***NOTE: This change order is not effective until approved by the Engineer.***

Description of work to be done, estimate of quantities and prices to be paid. (Segregate between additional work at contract price, agreed price and force account.) Unless otherwise stated, rates for rental of equipment cover only such time as equipment is actually used and no allowance will be made for idle time. This last percentage shown is the net accumulated increase or decrease from the original quantity in the Engineer's Estimate.

Extra Work at Force Account:

Provide additional funds .....

Estimated cost of Extra Work at Force Account $480,000.00

Estimated Cost: Increase ☑ Decrease ☐ **$480,000.00**

By reason of this order the time of completion will be adjusted as follows: 0 days

Submitted by

Signature	Resident Engineer Gary Pursell, P.E., Sup.T.E.	Date 7/19/07

Approval Recommended by

Signature	Supervising Transportation Engineer Gary Pursell, P.E., Sup. TE	Date 7/19/07

Engineer Approval by

Signature	Principal Bridge Enigneer Peter Siegenthaler, P.E., Prin. BE	Date 7/19/07

We the undersigned contractor, have given careful consideration to the change proposed and agree, if this proposal is approved, that we will provide all equipment, furnish the materials, except as may otherwise be noted above, and perform all services necessary for the work above specified, and will accept as full payment therefor the prices shown above.

TE: If you, the contractor, do not sign acceptance of this order, your attention is directed to the requirements of the specifications as to ceeding with the ordered work and filing a written protest within the time therein specified.

Contractor Acceptance by

Signature NOT NEEDED	(Print name and title)	Date

STATE OF CALIFORNIA - DEPARTMENT OF TRANSPORTATION

CONTRACT CHANGE ORDER MEMORANDUM

TO: Pete Siegenthaler, Prin. TE / Gary Pursell, P.E., Sup T.E.	FILE: **E.A.** 04 - 0120F4
FROM: Gary Pursell, P.E., Sup.T.E.	**CO-RTE-PM** SF-80-13.2/13.9
	FED. NO.
CCO#: **17** SUPPLEMENT#: **2** Category Code: **CXSX**	CONTINGENCY BALANCE (incl. this change) **$142,320,043.34**
COST: **$480,000.00** INCREASE ☑ DECREASE ☐	HEADQUARTERS APPROVAL REQUIRED? ☑ YES ☐ NO
SUPPLEMENTAL FUNDS PROVIDED: **$0.00**	IS THIS REQUEST IN ACCORDANCE WITH ENVIRONMENTAL DOCUMENTS? ☑ YES ☐ NO
CCO DESCRIPTION: Provide Add Funds for METS Integration	**PROJECT DESCRIPTION:** CONSTRUCT SELF-ANCHORED SUSPENSION BRIDGE

Original Contract Time:	Time Adj. This Change:	Previously Approved CCO Time Adjustments:	Percentage Time Adjusted: (including this change)	Total # of Unreconciled Deferred Time CCO(s): (including this change)
2490 Day(s)	**0** Day(s)	**30** Day(s)	**1** %	**0**

THIS CHANGE ORDER PROVIDES FOR:

Providing additional funds for the software, software licenses and software customization not included in Section 10-1.20, "Document Management System," Section 10-1.16, "Working Drawing Campus," and Section 10-1.13, "Progress Schedule (Critical Path Method)," of the Contract Special Provisions for inspection of work overseas.

Reviewing Section 10-1.20, "Document Management System" of the Special Provisions, the specifications do not address documentation services that are required on this contract overseas. On the SAS project, coordination with document control with METS at the fabrication facilities is required to maintain good communication and resolve issues in a timely manner to help keep the project on schedule. This supplement will implement the document management control system for METS overseas and will integrate welding reports, daily diaries and a photo database that can be retrieved quickly by Caltrans staff at the SAS project.

Payment for this supplemental change will be at Extra Work at Force Account for an estimated amount of $480,000.00, which can be financed from the contingency fund. This will result in a cumulative amount of $980,000.00 for this change order.

No adjustment of contract time is warranted, as this change order does not affect the controlling operation.

The Resident Engineer requests an Issue and Approve from the Division of Construction (HQ).

CONCURRED BY:			
Construction Engineer:	Res. Eng., Gary Pursell, Sup. TE	Date	6/21/07
Bridge Engineer:	Struct Rep, Rick Morrow, Sup TE	Date	6/21/07
Project Engineer:		Date	
Project Manager:	Proj Manager, Ken Terpstra	Date	7/19/07
FHWA Rep.:		Date	
Environmental:		Date	
Other (specify):	HQ, Rob Kobal	Date	6/25/07
Other (specify):	PCE, Pete Siegenthaler, Prin TE	Date	6/26/07
District Prior Approval By:		Date	
HQ (Issue Approve) By:	HQ, Ken Darby	Date	
Resident Engineer's Signature:	Gary Pursell	Date	7/19/07

ESTIMATE OF COST

	THIS REQUEST	TOTAL TO DATE
ITEMS	$0.00	$0.00
FORCE ACCOUNT	$480,000.00	$980,000.00
AGREED PRICE	$0.00	$0.00
ADJUSTMENT	$0.00	$0.00
TOTAL	$480,000.00	$980,000.00

FEDERAL PARTICIPATION

☐ PARTICIPATING ☐ PARTICIPATING IN PART ☑ NONE
☐ NON-PARTICIPATING (MAINTENANCE) ☐ NON-PARTICIPATING

FEDERAL SEGREGATION (if more than one Funding Source or P.I.P. type)
☑ CCO FUNDED PER CONTRACT ☐ CCO FUNDED AS FOLLOWS

FEDERAL FUNDING SOURCE	PERCENT

ADA Notice: For individuals with sensory disabilities, this document is available in alternate formats. For information call: (916) 654-6410 or TDD (916) 654-3880 or write Records and Forms Management, 1120 N Street, MS-89, Sacramento, CA 95814.

STATE OF CALIFORNIA - DEPARTMENT OF TRANSPORTATION

CONTRACT CHANGE ORDER

Change Requested by: Engineer

CCO: 17 **Suppl. No. 3** **Contract No. 04 – 0120F4** **Road** SF-80-13.2/13.9 **FED. AID LOC.:**

To: **AMERICAN BRIDGE/FLUOR ENTERPRISES INC A JOINT VENTURE**

You are directed to make the following changes from the plans and specifications or do the following described work not included in the plans and specifications for this contract. ***NOTE: This change order is not effective until approved by the Engineer.***

Description of work to be done, estimate of quantities and prices to be paid. (Segregate between additional work at contract price, agreed price and force account.) Unless otherwise stated, rates for rental of equipment cover only such time as equipment is actually used and no allowance will be made for idle time. This last percentage shown is the net accumulated increase or decrease from the original quantity in the Engineer's Estimate.

Extra Work at Force Account:

Provide additional funds.

Estimated cost of Extra Work at Force Account.....$1,020,000.00

Estimated Cost: Increase ☒ Decrease ☐ $1,020,000.00

By reason of this order the time of completion will be adjusted as follows: 0

Submitted by

Signature **Resident Engineer** Darryl Schram for Gary Pursell, Sup.T.E. **Date** 11/19/08

Approval Recommended by

Signature Gary Pursell **Supervising Bridge Engineer** Gary Pursell, Sup.T.E. **Date** 11/19/08

Engineer Approval by

Signature Michael Fraum **Supervising Transportation Engineer** Peter Siegenthaler, Prin.T.E. **Date** 12/30/08

We the undersigned contractor, have given careful consideration to the change proposed and agree, if this proposal is approved, that we will provide all equipment, furnish the materials, except as otherwise be noted above, and perform all services necessary for the work above specified, and will accept as full payment therefor the prices shown above.

NOTE: If you, the contractor, do not sign acceptance of this order, your attention is directed to the requirements of the specifications as to proceeding with the ordered work and filing a written protest within the time therein specified.

Contractor Acceptance by

Signature (Print name and title) (NOT REQUIRED) **Date**

STATE OF CALIFORNIA - DEPARTMENT OF TRANSPORTATION

CONTRACT CHANGE ORDER MEMORANDUM

TO: Pete Siegenthaler, Prin. TE / Gary Pursell, P.E., Sup T.E.	FILE: E.A. 04 - 0120F4 CO-RTE-PM SF-80-13.2/13.9 FED. NO.
FROM: Gary Pursell, P.E., Sup.T.E.	
CCO#: 17 SUPPLEMENT#: 3 Category Code: AWZZ	CONTINGENCY BALANCE (incl. this change) $127,647,187.40
COST: $1,020,000.00 INCREASE ☑ DECREASE ☐	HEADQUARTERS APPROVAL REQUIRED? ☑ YES ☐ NO
SUPPLEMENTAL FUNDS PROVIDED: $0.00	IS THIS REQUEST IN ACCORDANCE WITH ENVIRONMENTAL DOCUMENTS? ☑ YES ☐ NO
CCO DESCRIPTION: Provide Additional Funds for PMIV	**PROJECT DESCRIPTION:** CONSTRUCT SELF-ANCHORED SUSPENSION BRIDGE

Original Contract Time:	Time Adj. This Change:	Previously Approved CCO Time Adjustments:	Percentage Time Adjusted: (including this change)	Total # of Unreconciled Deferred Time CCO(s): (including this change)
2490 Day(s)	0 Day(s)	30 Day(s)	1 %	2

THIS CHANGE ORDER PROVIDES FOR:

Providing funds for additional software licenses and additional software customization not included in Section 10-1.20, "Document Management System," of the Contract Special Provisions.

Section 10-1.20 "Document Management System" of the contract Special Provisions, does not address modifications and enhancements required to fully implement documentation and tracking of Field Change Notices (FCN's), Non-Conformance Reports (NCR's), METS information, RFI's, CCO's, Submittals, plan sheets, correspondence, and provide management information capabilities. Additional software licenses are needed to accommodate increased on-site and overseas staff. These changes will provide improved access to project documents, enhance communications between the Oakland Construction Office and the overseas operations, assist in resolving issues efficiently, and assist in preventing claims by providing comprehensive documentation information in a timely manner.

Payment for this supplemental change will be at Extra Work at Force Account for an estimated amount of $1,020,000.00, which can be financed from the contingency fund. This will result in a cumulative amount of $2,000,000.00 for this change order. A detailed cost analysis is in the project records.

No adjustment of contract time is warranted, as this change order does not affect the controlling operation.

This change order has concurrence from Gary Pursell (Resident Engineer), Rick Morrow (Sup. Structure Rep), Rich Foley (HQ Const), Ken Terpstra (Project Manager) and Pete Siegenthaler (Principal TE).

TBPOC approved this change order at their December 23, 2008 Meeting.

Design and Maintenance concurrences are not required for this change.

The Resident Engineer received an Issue and Approve from the Division of Construction for this Change on 11/20/2008.

ADA Notice: For individuals with sensory disabilities, this document is available in alternate formats. For information call: (916) 654-6410 or TDD (916) 654-3880 or write Records and Forms Management, 1120 N Street, MS-89, Sacramento, CA 95814.

CONCURRED BY:

Construction Engineer:	Res. Eng., Gary Pursell, Sup. TE	Date 11/18/08
Bridge Engineer	Struct Rep, Rick Morrow, Sup TE	Date 11/18/08
Project Engineer:		Date
Project Manager:	Proj Manager, Ken Terpstra	Date 11/18/08
FHWA Rep.:		Date
Environmental		Date
Other (specify)	TBPOC	Date 12/23/08
Other (specify):	HQ, Rich Foley	Date 11/18/08
District Prior Approval By:		Date
HQ (Issue Approve) By:	HQ Bob Molera	Date 11/20/08
Resident Engineer's Signature:	Michael Fromm	Date 12/30/08

ESTIMATE OF COST

	THIS REQUEST	TOTAL TO DATE
ITEMS	$0.00	$0.00
FORCE ACCOUNT	$1,020,000.00	$2,000,000.00
AGREED PRICE	$0.00	$0.00
ADJUSTMENT	$0.00	$0.00
TOTAL	$1,020,000.00	$2,000,000.00

FEDERAL PARTICIPATION

☐ PARTICIPATING ☐ PARTICIPATING IN PART ☑ NONE
☐ NON-PARTICIPATING (MAINTENANCE) ☐ NON-PARTICIPATING

FEDERAL SEGREGATION (if more than one Funding Source or P.I.P. type)
☐ CCO FUNDED PER CONTRACT ☐ CCO FUNDED AS FOLLOWS

FEDERAL FUNDING SOURCE	PERCENT

ADA Notice: For individuals with sensory disabilities, this document is available in alternate formats. For information call: (916) 654-6410 or TDD (916) 654-3880 or write Records and Forms Management, 1120 N Street, MS-89, Sacramento, CA 95814

CONTRACT CHANGE ORDER

Change Requested by: Engineer

CCO: 18	Suppl. No. 0	Contract No. 04 - 0120F4	Road SF-80-13.2/13.9	FED. AID LOC.:

To: **AMERICAN BRIDGE/FLUOR ENTERPRISES INC A JOINT VENT**

You are directed to make the following changes from the plans and specifications or do the following described work not included in the plans and specifications for this contract. ***NOTE: This change order is not effective until approved by the Engineer.***

Description of work to be done, estimate of quantities and prices to be paid. (Segregate between additional work at contract price, agreed price and force account.) Unless otherwise stated, rates for rental of equipment cover only such time as equipment is actually used and no allowance will be made for idle time. This last percentage shown is the net accumulated increase or decrease from the original quantity in the Engineer's Estimate.

Extra Work at Force Account:

Install water service for mutual use by both Contractor and Department at the field office facilities along Pier 7.

Installation costs will be shared based on a 50/50 split of installation costs from the source to the lateral junction point where our respective, exclusive, service begins. Beyond the point of mutual service, each party will be responsible for 100% of their exclusive service installation costs. Final proportioning will be based on actual costs without markups and will be determined when actual installation costs are known.

The Department will reimburse the Contractor "ABFJV" for its proportional share of water used during the course of the work, as determined by on-site water meters. Payments will be made on a regular, ongoing basis to be mutually agreed between the Department and the Contractor. Markups will be allowed for payments involving the ongoing water service.

Labor, equipment and material authorized by the Engineer, as necessary, will be paid in accordance with the provisions of Section 4-1.03D, "Extra Work" of the Standard Specifications and Section 5-1.24, "Force Account Payment" of the Special Provisions.

There will be no adjustment in contract time as this change order does not affect the controlling operations.

Estimated cost of Extra Work at Force Account $180,000.00

Estimated Cost: **Increase** ☑ **Decrease** ☐ **$180,000.00**

By reason of this order the time of completion will be adjusted as follows: 0 days

Submitted by

Signature	Resident Engineer: Gary Pursell, P.E., Sup.T.E.	Date 2/9/07

Approval Recommended by

Signature	Construction Engineer: Gary Pursell, P.E., Sup.T.E.	Date 2/27/07

Engineer Approval by

Signature	(Print name and title) Gary Pursell, P.E., Sup.T.E. - Construction Engineer	Date 2/27/07

We the undersigned contractor, have given careful consideration to the change proposed and agree, if this proposal is approved, that we will provide all equipment, furnish the materials, except as may otherwise be noted above, and perform all services necessary for the work above specified, and will accept as full payment therefor the prices shown above.

NOTE: If you, the contractor, do not sign acceptance of this order, your attention is directed to the requirements of the specifications as to proceeding with the ordered work and filing a written protest within the time therein specified.

Contractor Acceptance by

Signature	(Print name and title) Michael D. Flavers Project Director	Date 2-21-07

STATE OF CALIFORNIA - DEPARTMENT OF TRANSPORTATION

CONTRACT CHANGE ORDER MEMORANDUM

DATE: 2/15/2007 Page 1 of 1

TO: Pete Siegenthaler, Prin. TE / Gary Pursell, P.E., Sup T.E.	FILE: E.A. 04 - 0120F4
FROM: Gary Pursell, P.E., Sup.T.E.	CO-RTE-PM SF-80-13.2/13.9
	FED. NO.
CCO#: 18 SUPPLEMENT#: 0 Category Code: ~~CAXX~~ CXXX	CONTINGENCY BALANCE (incl. this change) $145,308,830.00
COST: $180,000.00 INCREASE ☑ DECREASE ☐	HEADQUARTERS APPROVAL REQUIRED? ☐ YES ☑ NO
SUPPLEMENTAL FUNDS PROVIDED: $0.00	IS THIS REQUEST IN ACCORDANCE WITH ENVIRONMENTAL DOCUMENTS? ☑ YES ☐ NO
CCO DESCRIPTION: Water Utility to Pier 7	**PROJECT DESCRIPTION:** CONSTRUCT SELF-ANCHORED SUSPENSION BRIDGE

Original Contract Time:	Time Adj. This Change:	Previously Approved CCO Time Adjustments:	Percentage Time Adjusted: (including this change)	Total # of Unreconciled Deferred Time CCO(s): (including this change)
2490 Day(s)	0 Day(s)	30 Day(s)	1 %	0

THIS CHANGE ORDER PROVIDES FOR:

Installing water service for mutual use for both Contractor and Department field office facilities along Pier 7.

With the addition of the SFOBB SAS Project, it has been determined that the water supply currently feeding the Skyway project (Contractor and State), does not have enough water pressure and volume to supply the additional needs for the Contractor and Department trailers. The lack of sufficient water pressure has resulted in local, sparatic outages for drinking and sanitary use, as well as the fire sprinkler system in the SAS State trailers not being connected. It is imperative that the tie-in to another water source near the trailers be constructed immediately for reliable drinking water and a working fire sprinkler system.

The installation costs will be shared based on a 50/50 split of installation costs from the source to the lateral junction point where our respective, exclusive, service begins. Beyond the point of mutual service, each party will be responsible for 100% of their exclusive service installation costs. Final proportioning will be based on actual costs without markups and will be determined when actual installation costs are known.

The Department will reimburse the Contractor for its proportional share of water used during the course of the work, as determined by on-site water meters. Payment will be made on a regular, ongoing basis to be mutually agreed between the Department and the Contractor. The Department's cost of the work addressed in this change order is estimated at $180,000.00, which can be financed from the contingency fund.

There will no adjustment in contract time as this change order does not affect the controlling operation.

CONCURRED BY:

Construction Engineer:	Res. Eng., Gary Pursell, Sup. TE	Date 1/30/07
Bridge Engineer:		Date
Project Engineer:		Date
Project Manager:	Proj Manager, Ken Terpstra	Date 2/27/07
FHWA Rep.:		Date
Environmental:		Date
Other (specify):	PCE, Pete Siegenthaler, Prin TE	Date 1/30/07
Other (specify):		Date
District Prior Approval By:		Date
HQ (Issue Approve) By:		Date
Resident Engineer's Signature:	Gary Pursell	Date 2/27/07

ESTIMATE OF COST

	THIS REQUEST	TOTAL TO DATE
ITEMS	$0.00	$0.00
FORCE ACCOUNT	$180,000.00	$180,000.00
AGREED PRICE	$0.00	$0.00
ADJUSTMENT	$0.00	$0.00
TOTAL	$180,000.00	$180,000.00

FEDERAL PARTICIPATION

☐ PARTICIPATING ☐ PARTICIPATING IN PART ☑ NONE
☐ NON-PARTICIPATING (MAINTENANCE) ☐ NON-PARTICIPATING

FEDERAL SEGREGATION (If more than one Funding Source or P.I.P. type)
☑ CCO FUNDED PER CONTRACT ☐ CCO FUNDED AS FOLLOWS

FEDERAL FUNDING SOURCE	PERCENT

ADA Notice: For individuals with sensory disabilities, this document is available in alternate formats. For information call: (916) 654-6410 or TDD (916) 654-3880 or write Records and Forms Management, 1120 N Street, MS-89, Sacramento, CA 95814.

STATE OF CALIFORNIA - DEPARTMENT OF TRANSPORTATION

CONTRACT CHANGE ORDER

Change Requested by: Engineer

CCO: 18	Suppl. No. 0	Contract No. 04 - 0120F4	Road SF-80-13.2/13.9	FED. AID LOC.:

To: AMERICAN BRIDGE/FLUOR ENTERPRISES INC A JOINT VENT

You are directed to make the following changes from the plans and specifications or do the following described work not included in the plans and specifications for this contract. ***NOTE: This change order is not effective until approved by the Engineer.***

Description of work to be done, estimate of quantities and prices to be paid. (Segregate between additional work at contract price, agreed price and force account.) Unless otherwise stated, rates for rental of equipment cover only such time as equipment is actually used and no allowance will be made for idle time. This last percentage shown is the net accumulated increase or decrease from the original quantity in the Engineer's Estimate.

Extra Work at Force Account:

Install water service for mutual use by both Contractor and Department at the field office facilities along Pier 7.

Installation costs will be shared based on a 50/50 split of installation costs from the source to the lateral junction point where our respective, exclusive, service begins. Beyond the point of mutual service, each party will be responsible for 100% of their exclusive service installation costs. Final proportioning will be based on actual costs without markups and will be determined when actual installation costs are known.

The Department will reimburse the Contractor "ABFJV" for its proportional share of water used during the course of the work, as determined by on-site water meters. Payments will be made on a regular, ongoing basis to be mutually agreed between the Department and the Contractor. Markups will be allowed for payments involving the ongoing water service.

Labor, equipment and material authorized by the Engineer, as necessary, will be paid in accordance with the provisions of Section 4-1.03D, "Extra Work" of the Standard Specifications and Section 5-1.24, "Force Account Payment" of the Special Provisions.

There will be no adjustment in contract time as this change order does not affect the controlling operations.

Estimated cost of Extra Work at Force Account $180,000.00

Estimated Cost: Increase ☑ Decrease ☐ **$180,000.00**

By reason of this order the time of completion will be adjusted as follows: 0 days

Submitted by

Signature Gary Pursell	Resident Engineer: Gary Pursell, P.E., Sup.T.E.	Date 2/9/07

Approval Recommended by

Signature Gary Pursell	Construction Engineer: Gary Pursell, P.E., Sup.T.E.	Date 2/27/07

Engineer Approval by

Signature Gary Pursell	(Print name and title) Gary Pursell, P.E., Sup.T.E. - Construction Engineer	Date 2/27/07

We the undersigned contractor, have given careful consideration to the change proposed and agree, if this proposal is approved, that we will provide all equipment, furnish the materials, except as may otherwise be noted above, and perform all services necessary for the work above specified, and will accept as full payment therefor the prices shown above.

NOTE: If you, the contractor, do not sign acceptance of this order, your attention is directed to the requirements of the specifications as to proceeding with the ordered work and filing a written protest within the time therein specified.

Contractor Acceptance by

Signature	(Print name and title) Michael D. Flowers Project Director	Date 2-21-07

STATE OF CALIFORNIA - DEPARTMENT OF TRANSPORTATION

CONTRACT CHANGE ORDER

Change Requested by: Engineer

CCO: 18	Suppl. No. 1	Contract No. 04 - 0120F4	Road SF-80-13.2/13.9	FED. AID LOC.:

To: **AMERICAN BRIDGE/FLUOR ENTERPRISES INC A JOINT VENT**

You are directed to make the following changes from the plans and specifications or do the following described work not included in the plans and specifications for this contract. ***NOTE: This change order is not effective until approved by the Engineer.***

Description of work to be done, estimate of quantities and prices to be paid. (Segregate between additional work at contract price, agreed price and force account.) Unless otherwise stated, rates for rental of equipment cover only such time as equipment is actually used and no allowance will be made for idle time. This last percentage shown is the net accumulated increase or decrease from the original quantity in the Engineer's Estimate.

Extra Work at Force Account:

Construct site work improvements in and around Pier 7 to support and compliment the temporary office facilities located at 311, 325, 333 and 345 Burma Road as directed by the Engineer. This work includes, but is not limited to, the following:

1) Removing unsuitable existing temporary facilities in conflict with temporary office facilities.
2) Connecting water and sewer from Pier 7 services to temporary office facilities.
3) Providing additional electrical service which also includes installing electrical transformer and breaker panel.
4) Paving and leveling parking area to correct flooding, eliminate potholes, and maximize parking capacity.
5) Providing required handicap and personnel access ramps between the Public Information Office, Skyway trailer, SAS facilities, and parking areas.

Labor, equipment and material authorized by the Engineer, as necessary, will be paid in accordance with the provisions of Section 4-1.03D, "Extra Work" of the Standard Specifications and Section 5-1.24, "Force Account Payment" of the Special Provisions.

Estimated cost of Extra Work at Force Account $690,000.00

Estimated Cost: Increase ☑ **Decrease** ☐ **$690,000.00**

By reason of this order the time of completion will be adjusted as follows: 0 days

Submitted by

Signature	Resident Engineer	Date
Gary Pursell	Gary Pursell, P.E., Sup.T.E.	7/27/07

Approval Recommended by

Signature	Supervising Bridge Engineer	Date
R. T. Morrow	Richard Morrow, P.E., Sup. BE	7/27/07

Engineer Approval by

Signature	Principal Bridge Enigneer	Date
Gary Pursell	Gary Pursell, P.E., Sup. TE	7/31/07

We the undersigned contractor, have given careful consideration to the change proposed and agree, if this proposal is approved, that we will provide all equipment, furnish the materials, except as may otherwise be noted above, and perform all services necessary for the work above specified, and will accept as full payment therefor the prices shown above.

NOTE: If you, the contractor, do not sign acceptance of this order, your attention is directed to the requirements of the specifications as to proceeding with the ordered work and filing a written protest within the time therein specified.

Contractor Acceptance by

Signature	(Print name and title)	Date
Michael D. Flowers	Michael D. Flowers Project Director	7-27-07

STATE OF CALIFORNIA - DEPARTMENT OF TRANSPORTATION

CONTRACT CHANGE ORDER MEMORANDUM

DATE: 7/27/2007

TO: Pete Siegenthaler, Prin. TE / Gary Pursell, P.E., Sup T.E.	FILE: **E.A.** 04 - 0120F4
FROM: Gary Pursell, P.E., Sup.T.E.	**CO-RTE-PM** SF-80-13.2/13.9
	FED. NO.
CCO#: **18** SUPPLEMENT#: **1** Category Code: **CXXX**	CONTINGENCY BALANCE (incl. this change) **$142,438,199.29**
COST: **$690,000.00** INCREASE ☑ DECREASE ☐	HEADQUARTERS APPROVAL REQUIRED? ☑ YES ☐ NO
SUPPLEMENTAL FUNDS PROVIDED: **$0.00**	IS THIS REQUEST IN ACCORDANCE WITH ENVIRONMENTAL DOCUMENTS? ☑ YES ☐ NO
CCO DESCRIPTION: Support to Pier 7 Site Improvements	**PROJECT DESCRIPTION:** CONSTRUCT SELF-ANCHORED SUSPENSION BRIDGE

Original Contract Time:	Time Adj. This Change:	Previously Approved CCO Time Adjustments:	Percentage Time Adjusted: (including this change)	Total # of Unreconciled Deferred Time CCO(s): (including this change)
2490 Day(s)	**0** Day(s)	**30** Day(s)	**1** %	**0**

THIS CHANGE ORDER PROVIDES FOR:

Constructing site work improvements in and around Pier 7 to support and compliment the temporary office facilities located at 311, 325, 333 and 345 Burma Road as directed by the Engineer. This work includes, but is not limited to, the following:

1) Removing unsuitable existing temporary facilities in conflict with temporary office facilities.
2) Connecting water and sewer from Pier 7 services to temporary office facilities.
3) Providing additional electrical service which also includes installing electrical transformer and breaker panel.
4) Paving and leveling parking area to correct flooding, eliminate potholes, and maximize parking capacity.
5) Providing required handicap and personnel access ramps between the Public Information Office, Skyway trailer, SAS facilities, and parking areas.

The Pier 7 site work improvements are needed to support and compliment the joint-use office facilities on Pier 7. The site improvements shall be utilized by the Department's engineering staff and Contractor's staff during the construction of the self-anchored suspension bridge and new east span.

Site work must be performed in order to fully utilize the site and joint-use facilities currently being provided. Site and facilities are being provided for joint technical problem solving, corridor scheduling sessions and timely communication between all essential parties on the SFOBB corridor projects.

Payment for this supplemental change will be at Extra Work at Force Account for an estimated amount of $690,000.00, which can be financed from the contingency fund. This will result in a cumulative amount of $870,000.00 for this change order.

No adjustment of contract time is warranted, as this change order does not affect the controlling operation. The Resident Engineer requests an Issue and Approve from the Division of Construction (HQ).

CONCURRED BY:			
Construction Engineer:	Res. Eng., Gary Pursell, Sup. TE	Date	7/23/07
Bridge Engineer:		Date	
Project Engineer:		Date	
Project Manager:	Proj Manager, Ken Terpstra	Date	
FHWA Rep.:		Date	
Environmental:		Date	
Other (specify):	PCE, Michael Forener	Date	7/26/07
Other (specify):		Date	
District Prior Approval By:		Date	
HQ (Issue Approve) By:		Date	
Resident Engineer's Signature:	Gary Pursell	Date	7/27/07

ESTIMATE OF COST

	THIS REQUEST	TOTAL TO DATE
ITEMS	$0.00	$0.00
FORCE ACCOUNT	$690,000.00	$870,000.00
AGREED PRICE	$0.00	$0.00
ADJUSTMENT	$0.00	$0.00
TOTAL	$690,000.00	$870,000.00

FEDERAL PARTICIPATION

☐ PARTICIPATING ☐ PARTICIPATING IN PART ☑ NONE
☐ NON-PARTICIPATING (MAINTENANCE) ☐ NON-PARTICIPATING

FEDERAL SEGREGATION (if more than one Funding Source or P.I.P. type)
☑ CCO FUNDED PER CONTRACT ☐ CCO FUNDED AS FOLLOWS

FEDERAL FUNDING SOURCE	PERCENT

ADA Notice: For individuals with sensory disabilities, this document is available in alternate formats. For information call: (916) 654-6410 or TDD (916) 654-3880 or write Records and Forms Management, 1120 N Street, MS-89, Sacramento, CA 95814.

CONTRACT CHANGE ORDER

Change Requested by: Contractor

CCO: 19	Suppl. No. 0	Contract No. 04 - 0120F4	Road SF-80-13.2/13.9	FED. AID LOC.:

To: **AMERICAN BRIDGE/FLUOR ENTERPRISES INC A JOINT VENT**

You are directed to make the following changes from the plans and specifications or do the following described work not included in the plans and specifications for this contract. ***NOTE: This change order is not effective until approved by the Engineer.***

Description of work to be done, estimate of quantities and prices to be paid. (Segregate between additional work at contract price, agreed price and force account.) Unless otherwise stated, rates for rental of equipment cover only such time as equipment is actually used and no allowance will be made for idle time. This last percentage shown is the net accumulated increase or decrease from the original quantity in the Engineer's Estimate.

Adjustment of Compensation at Lump Sum:

Waive the requirement that working drawings shall be stamped and signed by an Engineer in reference to structural steel shop drawings for the steel tower and orthotropic box girder being detailed by Candraft-Tensor, LLC, as shown on sheet two (2) through eight (8) of this change order.

The second paragraph of Section 5-1.01, "WORKING DRAWINGS", of the Special Provisions is revised to read:

"Working drawings shall be stamped and signed by an engineer who is registered as a Civil Engineer in the State of California. The requirement for the drawings to be stamped and signed by an engineer may be waived for selected working drawings when directed by the Engineer. When independently checked calculations are required, these calculations shall be stamped and signed by another engineer who is registered as a Civil Engineer in the State of California."

For this work, the Department agrees to accept a lump sum credit of ($303,830.50) as tabulated on sheet nine (9) of this change order.

Consideration of a time adjustment will be deferred until completion of the work specified herein. Determination of a commensurate time adjustment will be made in accordance with Section 10-1.13, "PROGRESS SCHEDULE (CRITICAL PATH METHOD)" and Section 10-1.14, "TIME-RELATED OVERHEAD" of the Special Provisions, as well as Section 8-1.07, "LIQUIDATED DAMAGES", of the Standard Specifications.

Cost of Adjustment of Compensation at Lump Sum .....($303,830.50)

Estimated Cost: Increase ☐ **Decrease** ☑ **($303,830.50)**

By reason of this order the time of completion will be adjusted as follows: Deferred

Submitted by

Signature	Resident Engineer Gary Pursell, P.E., Sup.T.E.	Date 6/19/08

Approval Recommended by

Signature	Supervising Bridge Engineer Richard Morrow, P.E., Sup. BE	Date 6/19/08

Engineer Approval by

Signature	Supervising Transportation Engineer Gary Pursell, P.E., Sup. TE	Date 9/26/08

We the undersigned contractor, have given careful consideration to the change proposed and agree, if this proposal is approved, that we will provide all equipment, furnish the materials, except as may otherwise be noted above, and perform all services necessary for the work above specified, and will accept as full payment therefor the prices shown above.

NOTE: If you, the contractor, do not sign acceptance of this order, your attention is directed to the requirements of the specifications as to proceeding with the ordered work and filing a written protest within the time therein specified.

Contractor Acceptance by

Signature	(Print name and title) Michael D. Flowers Project Director	Date 9.25.08

AP-9 Scope of Work Matrix

The following matrix defines CTLLC's responsibilities by contract drawing number and respective bid item as it pertainsto the services furnished under this agreement.

~~6/19/2006~~
REV. 6/5/2008
CCO 19

East Span Seismic SafetyProject
San Francisco - Oakland Bay Bridge
Caltrans Contract No. 04-0120F4

Candraft - Tensor LLC Detailing Scope of Work Matrix : ALL BID ITEMS BY DRAWING SHEET REFERENCE

- see ABF color-coded set for items identified as "included" in ABF scope of work

sheet No.	Bid Item No.		Description of work	CTLLC Scope	ABF Scope	PF	Comments/Notes
1-10			layout, profile, and superelevation information				reference only
11-31			construction & traffic handling details	N.I.C	inc		not in CTLLC scope of work
32,33			sign details	N.I.C	inc		not in CTLLC scope of work
34	55	OBG	sign support bracket attached to OBG	inc	inc	N	
35,36			sign details	N.I.C	inc		not in CTLLC scope of work
37-40			mechanical reference drawings				reference only
41-46	55	OBG	main span structure PS-5 piping plan layout	inc	inc	N	
47-51	55/85	Barriers/OBG	mechanical piping reference drawings				reference only
52	52	Tower	note 1 - penetration sleeve through strut façade	N.I.C	inc		not in CTLLC scope of work
53	55	OBG	mechanical piping reference drawings				reference only
54	55	OBG	PS-1, PS-2, PS-3, PS-4, PS-6	N.I.C			not in CTLLC scope of work
54	55	OBG	PS-5 (L76x76x9.5)	inc	inc	N	co-ordination/location by others
55	52/55	Tower/OBG	PS-7, PS-8, PS-9 (concrete), PS-10, PS-11, PS-12	N.I.C			not in CTLLC scope of work
55	52	Tower	PS-9 (plate shop weld to Tower)	N.I.C	inc		not in CTLLC scope of work
56	55	OBG	pipe support details	N.I.C	N.I.C		clarify scope
57	55	OBG	PS-22,23,26	inc	inc	N	co-ordination/location by others
57	55	OBG	PS-19, PS-20, PS-21, PS-24, PS-25, PS-27	N.I.C	inc		not in CTLLC scope of work

04-0120F4
CONTRACT CHANGE ORDER NO. 19
SHEET 2 OF 9

sheet No.	Bid Item No.		Description of work	CTLLC Scope	ABF Scope	pb	Comments/Notes
58-61	55	OBG	dehumidification plans	N.I.C	inc		reference only
62,63	128	Tower	tower dehumidification details	N.I.C	inc		not in CTLLC scope of work
64,65	55	OBG	east cable anchorage dehumidification details	N.I.C	inc		not in CTLLC scope of work
66,67	128	Tower	tower head dehumidification	N.I.C	inc		not in CTLLC scope of work
69,70	52	Tower	elevator guide connection clip angles	N.I.C	inc		not in CTLLC scope of work
71			general notes, abbreviations, symbols				reference only
72	57	Bikepath	call box support pipe, ref. detail 1 (note 5)	inc	inc	N	co-ordination/location by others
73	55	OBG	10mm & 13mm stiffener plates to OBG's	inc	inc	N	
74	55	OBG	13mm plate to crossbeam for stair support	inc	inc	N	
72-75	71		service platforms	inc	inc	N	
76			miscellaneous details	N.I.C	inc		not in CTLLC scope of work
77	55	OBG	typical cable tray support below bridge girder	N.I.C	inc		not in CTLLC scope of work
78,79	57	Bikepath	bench leg PL 13x120x150 shop welded to deck plate	inc	inc	N	co-ordination/location by others
80,81	55	OBG →	cable tray supports (internal)	inc	inc	N	co-ordination/location by others
82	55	OBG	pull box supports	N.I.C	inc		not in CTLLC scope of work
83	55	OBG →	electrical panel support	inc	inc	Y	co-ordination/location by others
84-86	55	OBG	cable tray supports (internal)	inc	inc	N	co-ordination/location by others
87-132	55	OBG	reference drawings (conduit holes for electrical)	N.I.C	inc		not in CTLLC scope of work
133	85	Barriers	L64x64x6.4 per section A-A	inc	?N.I.C	N	clarify scope ??
134 - 144	55	OBG	reference drawings (conduit holes for electrical)	N.I.C	inc		not in CTLLC scope of work
145	55	OBG →	light pole anchorage details	inc	inc	N	co-ordination/location by others
146-165	55	OBG	reference drawings (conduit holes for electrical)	N.I.C	inc		not in CTLLC scope of work
166	55	OBG	sleeve penetration detail 7/166	N.I.C	inc		not in CTLLC scope of work
167-174	55	OBG	reference drawings (conduit holes for electrical)	N.I.C	inc		not in CTLLC scope of work
175-180	55	OBG →	cable tray supports (internal)	inc	inc	N	co-ordination/location by others
181-230	55	OBG →	cable tray supports (internal)	inc	inc	N	co-ordination/location by others
175-230	55	OBG	reference drawings (conduit holes for electrical)	N.I.C	inc		not in CTLLC scope of work
209	85	Barriers →	L64x64x6.4 per section A-A	inc	?N.I.C	Y	co-ordination/location by others
231-233	55	OBG →	cable tray supports (internal)	inc	inc	N	co-ordination/location by others
234-236	55	OBG	reference drawings (conduit holes for electrical)	N.I.C	inc		not in CTLLC scope of work
237	55	OBG →	cable tray supports (internal)	inc	inc	N	co-ordination/location by others
238-291	55	OBG →	cable tray supports (internal)	inc	inc	N	co-ordination/location by others

04-0120F4

CONTRACT CHANGE ORDER NO. 19

SHEET 3 OF 9

sheet No.	Bid Item No.		Description of work	CTLLC Scope	ABF Scope	pg	Comments/Notes
238-293	52/55	Tower/OBG	reference drawings (conduit holes for electrical)	N.I.C	inc		not in CTLLC scope of work
267	52	Tower	tower lighting at head (bracket)	N.I.C	inc		not in CTLLC scope of work
292	55	OBG	sealing plate, ref. detail 2	inc	inc	N	
294-318	55	OBG	reference drawings (conduit holes for electrical)	N.I.C	inc		not in CTLLC scope of work
319,320	52	Tower	traffic operations system connections - Tower	N.I.C	inc		not in CTLLC scope of work
321-330	55	OBG	reference drawings (conduit holes for electrical)	N.I.C	inc		not in CTLLC scope of work
331,332	55	OBG	cable tray supports (internal)	inc	inc	N	co-ordination/location by others
333-335	52	Tower	strong motion detection system conduit - Tower	N.I.C	inc		not in CTLLC scope of work
336-338	55	OBG	cable tray supports (internal)	inc	inc		co-ordination/location by others
339-407	55	OBG	reference drawings (conduit holes for electrical)	N.I.C	inc		not in CTLLC scope of work
407A-D			traffic control systems	N.I.C	inc		not in CTLLC scope of work
408			bridge details	N.I.C	inc		not in CTLLC scope of work
409-415C			overhead sign details	N.I.C	inc		not in CTLLC scope of work
416,417			lighting standards	N.I.C	inc		not in CTLLC scope of work
418-427			general notes, drawing index	inc	inc	N	
428-441	55	OBG	reference drawings	inc	inc	N	
442-446			foundation plans, reference only	N.I.C	inc		
447-453			pier W2 details, reference only	N.I.C	inc		
454-509			W2 cap beam details, reference only	N.I.C	inc		
491	55	OBG	west jacking frame & blocking	N.I.C	inc		not in CTLLC scope of work
493	55	OBG	jacking saddle	N.I.C	inc		not in CTLLC scope of work
510-519			pier E2 details, reference only	N.I.C	inc		
520-523			cable tie-down details, reference only	N.I.C	inc		
524-613	52	Tower	tower details, and reference drawings	inc	inc	N	(except as listed herein)
526	52	Tower	tower mock-ups	N.I.C	inc		not in CTLLC scope of work
571	54	Strut	sherical bushings at tower struts	N.I.C	inc		not in CTLLC scope of work
593-599	52	Tower	anchor bolts, dowels (all below el. 3.000m)	N.I.C	inc		not in CTLLC scope of work
605	52	Tower	tower saddle (all above el. 151.000m)	N.I.C	inc		not in CTLLC scope of work
614-618	55	OBG	cable railing	N.I.C	inc		not in CTLLC scope of work
619-635	55	OBG	OBG details, and reference drawings	inc	inc	N	
636	55	OBG	cable railing base plate	N.I.C	inc		not in CTLLC scope of work
637-640	55	OBG	OBG details, and reference drawings	inc	inc	N	

04-0120F4
CONTRACT CHANGE ORDER NO. 19
SHEET 4 OF 9

sheet No.	Bid Item No.		Description of work	CTLLC Scope	ABF Scope	pg	Comments/Notes
641	55	OBG	anchor bolts	N.I.C	inc		not in CTLLC scope of work
642-645	55	OBG	adjusted camber	N.I.C	inc		not in CTLLC scope of work
646-673	55	OBG	OBG details, and reference drawings	inc	inc	N	utility opening co-ordination by others
674-676	55	OBG	shear key & bearing	N.I.C	inc		not in CTLLC scope of work
677	55	OBG	OBG details, and reference drawings	inc	inc	N	
678	55	OBG	east saddle	N.I.C	inc		not in CTLLC scope of work
679	55	OBG	shear key	N.I.C	inc		not in CTLLC scope of work
680-689	55	OBG	OBG details, and reference drawings	inc	inc	N	
690	55	OBG	modular joint (note 7)	N.I.C	inc		not in CTLLC scope of work
691-721	55	OBG	OBG details, and reference drawings	inc	inc	N	
722	55	OBG	shear key & bearing	N.I.C	inc		not in CTLLC scope of work
723-727	55	OBG	OBG details, and reference drawings	inc	inc	N	
728-730			west cable anchorage layout, details	N.I.C	inc		not in CTLLC scope of work
731-734	55	OBG	socket, rod, bearing block, bevelled washer, nut	N.I.C	inc		not in CTLLC scope of work
735,736	55	OBG	strand, socket, rod, bearing block, washer, nut	N.I.C	inc		not in CTLLC scope of work
737	55	OBG	east cable anchorage details	N.I.C	inc		not in CTLLC scope of work
738-741	55	OBG	suspension cable layouts	N.I.C	inc		not in CTLLC scope of work
742-748	55	OBG	suspender bracket details	inc	inc	N	
749,750	55	OBG	suspender rope, split collar, nuts	N.I.C	inc		not in CTLLC scope of work
751	55	OBG	suspender rope, split collar, nuts	N.I.C	inc		not in CTLLC scope of work
752	55	OBG	cable band, socket, shim packs & plates,	N.I.C	inc		not in CTLLC scope of work
753	55	OBG	suspender bracket details	inc	inc	N	
754	52	Tower	suspender at tower layout	inc	inc	N	reference only
755-757	52	Tower	suspender bearing assembly, and tower saddle	N.I.C	inc		not in CTLLC scope of work
758-764			cable and suspender details	N.I.C	inc		not in CTLLC scope of work
765-769	50		west deviation saddle housing details	inc	inc	N	
770,771			west jacking saddle details	N.I.C	inc		not in CTLLC scope of work
772,773	50	OBG	west jacking frame	inc	inc	N	
774-783	52	Tower	tower saddle details	N.I.C	inc		not in CTLLC scope of work
784-790D	55	OBG	east saddle & alternative saddle details	N.I.C	inc		not in CTLLC scope of work
786	55	OBG	grillage saddle bearing plate, MC330x47.3	inc	inc	N	
789	55	OBG	grillage saddle bearing plate, MC330x47.3	inc	inc	N	

04-0120F4

CONTRACT CHANGE ORDER NO. 19

SHEET 5 OF 9

sheet No.	Bid Item No.		Description of work	CTLLC Scope	ABF Scope	PC	Comments/Notes
790			elastomeric bearing, plate 10x580x500	N.I.C	inc		not in CTLLC scope of work
791,792	50		west deviation saddle housing	inc	inc	N	
793	50		west jacking saddle housing	inc	inc	N	
794-800	52	Tower	tower head details (above el.151.000m)	N.I.C	inc		not in CTLLC scope of work
801-804	52	Tower	tower saddle housing	N.I.C	inc		not in CTLLC scope of work
805,806	50	OBG	east saddle housing	inc	inc	N	
807,808	55	OBG	west cable shroud	N.I.C	inc		not in CTLLC scope of work
809	52	Tower	tower cable shroud	N.I.C	inc		not in CTLLC scope of work
810,811		OBG	east cable shroud	N.I.C	inc		not in CTLLC scope of work
812-815			cable handrope	N.I.C	inc		not in CTLLC scope of work
816-840	57	Bikepath	bikepath framing details, and reference drawings	inc	inc	N	
819-824	57	Bikepath	railing posts, and backing rods for silicone seals	N.I.C	inc		not in CTLLC scope of work
825,828,829	57	Bikepath	elastomeric pad	N.I.C	inc		not in CTLLC scope of work
827	57	Bikepath	railing posts and polyester concrete overlay	N.I.C	inc		not in CTLLC scope of work
832-835	57	Bikepath	elastomeric pad	N.I.C	inc		not in CTLLC scope of work
836	57	Bikepath	elastomeric pad	N.I.C	inc		not in CTLLC scope of work
838	57	Bikepath	elastomeric pad	N.I.C	inc		not in CTLLC scope of work
841-848			hinge K details	N.I.C	inc		for reference only
849-860			hinge A pipe beams	N.I.C	inc		for reference only
861-864			hinge K & A expansion joint details	N.I.C	inc		for reference only
865-872		→	seismic joint details (hinge A)			Y	
872	55	OBG	studs in OBG	inc	inc	N	
873-875	102		wind vortex shop welded and clamping plates	inc	inc	N	excluding plexiglass plates
876,877	55	OBG	deck drip plates	inc	inc	N	
878	85	Barriers	drainage details	N.I.C	inc		not in CTLLC scope of work
879-881	52	Tower	drainage details	N.I.C	inc		not in CTLLC scope of work
882-883	55	OBG	pier E2 bearing levelling plates	N.I.C	inc		not in CTLLC scope of work
884-886	55	OBG	pier E2 bearing details	N.I.C	inc		not in CTLLC scope of work
887,888	55	OBG	pier E2 shear key details	N.I.C	inc		not in CTLLC scope of work
889-894	85	Barriers	barrier details	inc	inc	N	
895-898			railing layouts, and details	N.I.C	inc		not in CTLLC scope of work
897	55	OBG	emergency access platforms and railing	N.I.C	inc		not in CTLLC scope of work

04-0120F4

CONTRACT CHANGE ORDER NO. 19

SHEET 6 OF 9

sheet No.	Bid Item No.		Description of work	CTLLC Scope	ABF Scope	PE	Comments/Notes
899,900	55	OBG	plate 13 railing support, and plate 22 base plate	inc	inc	N	co-ordination/location by others
901-903	55	OBG	railing baseplate details	N.I.C	inc		not in CTLLC scope of work
904,905	55	OBG	luminaire base plates	N.I.C	inc		not in CTLLC scope of work
906	55	OBG	stiffener extension plate 12mm	inc	inc	N	
907	55	OBG	L152x89x9.5 mounting angle	inc	inc	N	
908	55	OBG	luminaire base plates	N.I.C	inc		not in CTLLC scope of work
909			pier W2 access details	N.I.C	inc		not in CTLLC scope of work
910-914			west anchorage access details	N.I.C	inc		not in CTLLC scope of work
915,916			pier E2 access details	N.I.C	inc		not in CTLLC scope of work
917-938	52	Tower	tower access between EL.3.000m & EL.151.000m	inc	inc	N	
929-932	52	Tower	boom at top of tower	N.I.C	inc		not in CTLLC scope of work
939,940	52	Tower	tower elevator support details	N.I.C	inc		not in CTLLC scope of work
941,942	55	OBG	railing on crossbeam and OBG deck	N.I.C	inc		not in CTLLC scope of work
943	55	OBG	strand, bearings, shear key, saddle	N.I.C	inc		not in CTLLC scope of work
944-947	55	OBG	girder access reference details	inc	inc	N	
948	57	Bikepath	girder access reference details	inc	inc	N	
949-951	55	OBG	girder access reference details	inc	inc	N	
952-956			crossbeam maintenance traveller rail & railing	N.I.C	inc		not in CTLLC scope of work
957-959	55	OBG	dehumidifcation support framing	N.I.C	inc		not in CTLLC scope of work
960,961	52	Tower	dehumidifcation support framing	N.I.C	inc		not in CTLLC scope of work
962,963			miscellaneous dehumidification support details	N.I.C	inc		not in CTLLC scope of work
964	55	OBG	utility support frames (internal)	inc	inc	Y	co-ordination/location by others
965	52	Tower	utility conduit, sleeves, tower discharge pipe	N.I.C	inc		not in CTLLC scope of work
966	57	Bikepath	utility details and penetrations	N.I.C	inc		not in CTLLC scope of work
967-988			construction details				
989-1005			fender details	N.I.C	inc		not in CTLLC scope of work
1006-1037		OBG	traveler reference drawings	N.I.C	inc		not in CTLLC scope of work
1038-1119		OBG	traveler details	N.I.C	inc		not in CTLLC scope of work
1120-1133	101	OBG	traveler rail details	inc	inc	N	
1134-1144			traveler details	N.I.C	inc		not in CTLLC scope of work
1145-1152		Bikepath	traveler details	N.I.C	inc		not in CTLLC scope of work
1153-1158		Bikepath	traveler rail details	inc	inc	N	

04-012OF4
CONTRACT CHANGE ORDER NO. 19
SHEET 7 OF 9

sheet No.	Bid Item No.		Description of work	CTLLC Scope	ABF Scope	PE	Comments/Notes
1159-1163		Bikepath	traveler details	N.I.C	inc	Y	not in CTLLC scope of work
1164-1204			test boring logs				

04-0120F4
CONTRACT CHANGE ORDER NO. 19
SHEET 8 OF 9

Summary

Lump Sum Agreed Price
Adjustment of Compensation

CCO 19

		Hours	Rate/Hour	Amount
1.	A. Hassett Engr. Total Hours Prior to June 2007: (includes CCO & NOPC hours)	2329	$130.00	$302,770.00
	B. Additional Hours Certified by Hassett	167	$130.00	$21,710.00
2.	P Higgins Hours After May 2007 (supported by timesheets)	238	$130.00	$30,940.00
	Subtotal:			$355,420.00
3.	Less Previously Paid for Hassett: - CCO 21			-$4,030.00
	- CCO 23			-$910.00
	- CCO 29			-$11,430.50
	- CCO 38			-$22,880.00
				-$39,250.50
4.	Net Compensation Due for Hassett - CCO 19			$316,169.50
5.	Less Original Agreement:			-$702,000.00
6.	**Credit due for reduced scope of work to Hassett - CCO 19**			**-$385,830.50**
7.	Candraft-Tensor Impacts due to CCO 19			$82,000.00
8.	**Net Credit Due on CCO 19**			**-$303,830.50**

04-0120F4
CONTRACT CHANGE ORDER NO. 19
SHEET 9 OF 9

STATE OF CALIFORNIA - DEPARTMENT OF TRANSPORTATION

CONTRACT CHANGE ORDER MEMORANDUM

TO: Mike Forner, Prin. TE / Gary Pursell, P.E., Sup T.E.	FILE: E.A. 04 - 0120F4
FROM: Gary Pursell, P.E., Sup.T.E.	CO-RTE-PM SF-80-13.2/13.9
	FED. NO.
CCO#: 19 SUPPLEMENT#: 0 Category Code: CHSA	CONTINGENCY BALANCE (incl. this change) $134,080,012.40
COST: ($303,830.50) INCREASE ☐ DECREASE ☑	HEADQUARTERS APPROVAL REQUIRED? ☑ YES ☐ NO
SUPPLEMENTAL FUNDS PROVIDED: $0.00	IS THIS REQUEST IN ACCORDANCE WITH ENVIRONMENTAL DOCUMENTS? ☑ YES ☐ NO
CCO DESCRIPTION: PE Stamp on Working Drawings	**PROJECT DESCRIPTION:** CONSTRUCT SELF-ANCHORED SUSPENSION BRIDGE

Original Contract Time:	Time Adj. This Change:	Previously Approved CCO Time Adjustments:	Percentage Time Adjusted: (including this change)	Total # of Unreconciled Deferred Time CCO(s): (including this change)
2490 Day(s)	DEF Day(s)	30 Day(s)	1 %	0

THIS CHANGE ORDER PROVIDES FOR:

Revising Special Provisions Section 5-1.01, "WORKING DRAWINGS", to allow the Engineer to waive the requirement that all "Working drawings shall be stamped and signed by an engineer who is registered as a Civil Engineer in the State of California." The requirement shall be waived by the Engineer for shop drawings where no such engineering stamp would otherwise be required.

The construction of the SFOBB Self-Anchored Suspension Bridge contains requirements for several thousand working drawing submittals of varying complexity. Nearly all submittal specifications reference Section 5-1.01, "WORKING DRAWINGS", which requires review and stamping by a California licensed Professional Engineer (PE). Applying this requirement to all working drawings will adversely effects project cost and time. Impacts to project time are a major risk management concern. The specified submittal process prevents the Department from starting its review until a review is completed by an independent PE. This additional independent review adds an additional two to three weeks to the review process.

This change will allow the Engineer to waive the stamping requirement for submittals where the additional engineering review does not provide added value. This change will be limited to structural steel shop drawing submittals, which are being developed by ABFJV detailer Candraft-Tensor LLC, for the steel tower and orthotropic box girder. The Department has not historically required shop drawings be stamped by an independent engineer. Additionally, neither the Standard Specifications nor the Bridge Construction Records and Procedures require stamping of shop drawings. Stamping by a PE will continue to be enforced on submittals where they have historically been required and also from submittals received from unknown entities such as overseas fabricators. All decisions by the Engineer to waive stamping requirement are approved by the Engineer of Record and received concurrence from the Office of Structure Construction.

For this change, the Department will receive a credit of ($303,830.50), which will be returned to the contingency fund. The cost summary shown on the next sheet and on sheet 9 of the change order is explained as follows:

ADA Notice: For individuals with sensory disabilities, this document is available in alternate formats. For information call: (916) 654-6410 or TDD (916) 654-3880 or write Records and Forms Management, 1120 N Street, MS-89, Sacramento, CA 95814.

Summary of Lump Sum Agreed Price Adjustment of Compensation (CCO 19 sheet 9):

	Hours	Rate/Hour	Amount
1. A. Hassett Total Hours Prior to June 2007: (includes CCO & NOPC hours)	2329	$130.00	$302,770.00
B. Additional Hours Certified by Hassett	167	$130.00	$21,710.00
2. P Higgins Hours After May 2007 (supported by timesheets)	238	$130.00	$30,940.00
		Subtotal:	$355,420.00
3. Less Previously Paid for Hassett:		CCO 21	-$4,030.00
		CCO 23	-$910.00
		CCO 29	-$11,430.50
		CCO 38	-$22,880.00
		Subtotal:	-$39,250.50
4. Net Compensation Due for Hassett - CCO 19			$316,169.50
5. Less Original Agreement:			-$702,000.00
6. Credit due for reduced scope of work to Hassett - CCO 19			-$385,830.50
7. Candraft-Tensor Impacts due to CCO 19			$82,000.00
8. Net Credit Due on CCO 19			-$303,830.50

Basis for lump sum agreed price adjustment of compensation changes ordered by CCO 19, bullet numbers below correspond to item numbers above:

1. Compensate Hassett Engineering for actual work/hours completed thru May 2007, when authority to proceed for CCO 19 was issued. This work is quantified and supported by logs and/or timecards on file in detailed cost analysis.

2. Additional compensation to Hassett Engineering for documented hours expended on Candraft Tensor work after May 2007. Candraft-Tensor directed Hassett to continue to work after May 2007 to satisfy their obligation to be present in the Working Drawing Campus to review Shop Drawings still requiring and engineering review, i.e., TD sheets, and review of RFI's, etc. This work is quantified and supported by logs and/or timecards on file in detailed cost analysis.

3. Reduce the sum of items 1 & 2 above by the amounts previously paid for Hassett Engineering in other CCO's 21, 23, 29, & 38. Time cards and logs captured previously paid CCO work which must be deducted to prevent overpayment.

4. The sum of items 1, 2 & 3 above equates to the net amount due Hassett for CCO 19 changes.

5. The value of the original agreement between Hassett and Candraft-Tensor will be subtracted from item 4 above to determine the Department credit for reduced scope of Hassett's work.

6. Department credit due to reduction in scope of Hassett's work.

7. Due to the changes ordered by CCO 19, Candraft-Tensor was impacted by an additional operation to its working drawing process. Prior to CCO 19, upon completion of Hassett Engineering's review and stamping, Hassett finalized and packaged up shop drawings for submittal to ABF and Caltrans. By eliminating Hassett's involvement in the shop drawing process with CCO 19, this effort was shifted to Candraft-Tensor. Compensation to Candraft-Tensor for this added effort will be applied to the lump sum adjustment of compensation provided in CCO 19. This work is quantified and supported by logs and/or timecards on file in detailed cost analysis.

ADA Notice: For individuals with sensory disabilities, this document is available in alternate formats. For information call: (916) 654-6410 or TDD (916) 654-3880 or write Records and Forms Management, 1120 N Street, MS-89, Sacramento, CA 95814.

8. Summing the added compensation from item 7 above to the credit from item 6 above results in a net credit to the Department. Department credit shall be returned to the contingency fund by CCO 19.

Adjustment of contract time is deferred pending completion of the work specified in this change as it may affect the controlling operation.

Although shop drawings are not on the project schedules critical path at this time the Department will be entitled to a contract time adjustment credit should they become the controlling operation,

The Toll Bridge Program Oversight Committee has issued a directive to seek and implement any and all means to expedite the bridge opening. This change is consistent with that direction in that it will accelerate delivery of shop drawings, which could ultimately contribute to earlier completion of the project.

Concurrences have been received from the Marwan Nader (TY Lin, Engineer of Record), Brian Maroney (Deputy Toll Program Manager), Peter Siegenthaler (SFOBB Construction Manager) and Jon Tapping (Construction Coordinator).

This change order received an "Authority to Proceed" from the Division of Construction on May 15, 2007, and an "Issue and Approve" on July 30, 2008.

CONCURRED BY:			
Construction Engineer:	Res. Eng., Gary Pursell, Sup. TE	Date	5/3/07
Bridge Engineer:	Struct Rep, Rick Morrow, Sup TE	Date	5/3/07
Project Engineer:		Date	
Project Manager:	Proj Manager, Ken Terpstra	Date	2/14/08
FHWA Rep.:	PCE, Pete Siegenthaler, Prin TE	Date	5/3/07
Environmental:		Date	
Other (specify):	Design of Record, Marwan Nader,	Date	5/19/07
Other (specify):		Date	
District Prior Approval By:	HQ, Rob Kobal	Date	5/3/07
HQ (Issue Approve) By:	HQ, Ken Darby	Date	5/14/07
Resident Engineer's Signature:	Gary Pursell	Date	9/26/08

ESTIMATE OF COST

	THIS REQUEST	TOTAL TO DATE
ITEMS	$0.00	$0.00
FORCE ACCOUNT	$0.00	$0.00
AGREED PRICE	$0.00	$0.00
ADJUSTMENT	($303,830.50)	($303,830.50)
TOTAL	($303,830.50)	($303,830.50)

FEDERAL PARTICIPATION

☐ PARTICIPATING ☐ PARTICIPATING IN PART ☑ NONE
☐ NON-PARTICIPATING (MAINTENANCE) ☐ NON-PARTICIPATING

FEDERAL SEGREGATION (if more than one Funding Source or P.I.P. type)
☐ CCO FUNDED PER CONTRACT ☐ CCO FUNDED AS FOLLOWS

FEDERAL FUNDING SOURCE	PERCENT

ADA Notice: For individuals with sensory disabilities, this document is available in alternate formats. For information call: (916) 654-6410 or TDD (916) 654-3880 or write Records and Forms Management, 1120 N Street, MS-89, Sacramento, CA 95814.

STATE OF CALIFORNIA - DEPARTMENT OF TRANSPORTATION

CONTRACT CHANGE ORDER

Change Requested by: Engineer

CCO: 20	Suppl. No. 0	Contract No. 04 - 0120F4	Road SF-80-13.2/13.9	FED. AID LOC.:

To: **AMERICAN BRIDGE/FLUOR ENTERPRISES INC A JOINT VENTURE**

You are directed to make the following changes from the plans and specifications or do the following described work not included in the plans and specifications for this contract. ***NOTE: This change order is not effective until approved by the Engineer.***

Description of work to be done, estimate of quantities and prices to be paid. (Segregate between additional work at contract price, agreed price and force account.) Unless otherwise stated, rates for rental of equipment cover only such time as equipment is actually used and no allowance will be made for idle time. This last percentage shown is the net accumulated increase or decrease from the original quantity in the Engineer's Estimate.

Due to the unique mobilization payment limits and schedules contained in Section 10-1.21, "Mobilization," of the Special Provisions, the Department's automated payment system is unable to accurately process monthly pay estimates. This Contract Change Order allows the Department to provide accurate monthly progress payments per Special Provisions section 10-1.21, "Mobilization."

Estimate of Decrease in Contract Item at Contract Price:

Item No. 140: MOBILIZATION
-1 LS (-100.00%) .000.000.00 /LS =215.000.000.00 (-100.00%)

Eliminate Contract Item #140, Mobilization, for administrative purposes only. In accordance with Section 4-1.03B(3), "Eliminated Items," of the Standard Specifications, the adjustment due to the elimination of Item #140, Mobilization, is zero.

Total cost for Decrease in Contract Item.....($215,000,000.00)

Adjustment of Compensation at Lump Sum:

The contractor will be paid the sum of $215,000,000.00 for Mobilization. This sum constitutes full compensation, including markups, for this change. Mobilization will be paid in accordance with Section 10-1.21, "Mobilization," of the Special Provisions.

Cost of Adjustment of Compensation at Lump Sum $215,000,000.00

Estimated Cost: **Increase** ☐ **Decrease** ☐ **$0.00**

By reason of this order the time of completion will be adjusted as follows: 0 days

Submitted by

Signature Gary Pursell	Resident Engineer: Gary Pursell	Date 5/25/06

Approval Recommended by

Signature Gary Pursell	Construction Engineer: Gary Pursell	Date 5/31/06

Engineer Approval by

Signature Peter Siegenthaler	(Print name and title) PETER SIEGENTHALER - Chief	Date 5/31/06

We the undersigned contractor, have given careful consideration to the change proposed and agree, if this proposal is approved, that we will provide all equipment, furnish the materials, except as may otherwise be noted above, and perform all services necessary for the work above specified, and will accept as full payment therefor the prices shown above.

NOTE: If you, the contractor, do not sign acceptance of this order, your attention is directed to the requirements of the specifications as to proceeding with the ordered work and filing a written protest within the time therein specified.

Contractor Acceptance by

Signature Michael D. Fahn	(Print name and title)	Date 5-26-06

STATE OF CALIFORNIA - DEPARTMENT OF TRANSPORTATION

CONTRACT CHANGE ORDER MEMORANDUM

TO: PETER SIEGENTHALER / Gary Pursell	FILE: **E.A.** 04 - 0120F4
FROM: Gary Pursell	**CO-RTE-PM** SF-80-13.2/13.9
	FED. NO.
CCO#: **20** SUPPLEMENT#: **0** Category Code: **AXZZ**	CONTINGENCY BALANCE (incl. this change) **$148,652,590.00**
COST: **$0.00** INCREASE ☐ DECREASE ☐	HEADQUARTERS APPROVAL REQUIRED? ☑ YES ☐ NO
SUPPLEMENTAL FUNDS PROVIDED: **$0.00**	IS THIS REQUEST IN ACCORDANCE WITH ENVIRONMENTAL DOCUMENTS? ☑ YES ☐ NO
CCO DESCRIPTION: SAS Mobilization	**PROJECT DESCRIPTION:** CONSTRUCT SELF-ANCHORED SUSPENSION BRIDGE

LOCATION: IN SAN FRANCISCO COUNTY IN SAN FRANCISCO FROM 0.6 KM TO 1.3 KM EAST OF THE YERBA BUENA TUNNEL EAST PORTAL

THIS CHANGE ORDER PROVIDES FOR:

Allowing the Department to provide accurate monthly progress payments for mobilization per Special Provisions Section 10-1.21, "Mobilization." Due to the unique mobilization payment limits and payment schedule, i.e., 15% rather than 10% cap for progress pay purposes and an early payment schedule based on monthly progress payment number rather than percent complete, the Department's automated payment system was unable to accurately process monthly pay estimates.

Over a period of three weeks, every effort was made to correct the erroneous output from the automated pay system, to no avail. To correct the problem and provide payment to the Contractor as required in the contract, Contract Item #140, Mobilization, will be eliminated. This will nullify the programmed payment schedule and cap contained in the automatic payment system. Alternately, Mobilization payments required in the contract will be made manually via this CCO.

On May 23, 2006, John Tapping, Toll Program Coordinator, gave verbal authorization to proceed with the Contract Change Order. Failure to proceed with corrective measures at this point would have resulted in a delay of substantial payment to the Contractor.

Item No. 140, Mobilization will be eliminated 100%. The contractor will be paid per the Special Provisions of the Contract at adjustment compensation lump sum. Since this CCO is administrative only no other concurrence is necessary.

No adjustment of contract time is warranted, as this change does not affect the controlling operation.

CONCURRED BY:

Construction Engineer:	Gary Pursell GP	Date5/23/2006
Bridge Engineer:	Rick Morrow	Date5/23/2006
FHWA Representative:		Date
Project Engineer:		Date
Other (specify):		Date
		Date
		Date
District Prior Approval By:		Date
HQ (Issue Approve) By:		Date
Resident Engineer's Signature:	Gary Pursell	Date 5/25/06

ESTIMATE OF COST

	THIS REQUEST	TOTAL TO DATE
ITEMS	($215,000,000.00)	($215,000,000.00)
FORCE ACCOUNT	$0.00	$0.00
AGREED PRICE	$0.00	$0.00
ADJUSTMENT	$215,000,000.00	$215,000,000.00
TOTAL	$0.00	$0.00

FEDERAL PARTICIPATION

☐ PARTICIPATING ☐ PARTICIPATING IN PART ☑ NONE
☐ NON-PARTICIPATING (MAINTENANCE) ☐ NON-PARTICIPATING

FEDERAL SEGREGATION (if more than one Funding Source or P.I.P. type)
☐ CCO FUNDED PER CONTRACT ☐ CCO FUNDED AS FOLLOWS

FEDERAL FUNDING SOURCE	PERCENT

TELECOPY

California Department of Transportation

CONSTRUCTION DIVISION

TO: District 4 CCO Desk

Date: 5/31/2006

Contract No.: 4 - 0120F4

Road: SF-80-13.2/13.9

FED. No.: NONE

To: SARTIPI - 04

Attention: 04 - BORNMAN

HQ Direction: **TO ISSUE AND APPROVE**

CCO No. 020 **Sup. No.** 0 **Rev. No.** 0

Per Your Submittal Dated: 5/30/2006 **CCO Category Code:** A - X - Z - Z

ALLOW CALTRANS TO PROVIDE ACCURATE MONTHLY PROGRESS PAYMENTS FOR MOBILIZATION PER SECTION 10-1.21 "MOBILIZATION" OF THE SPECIAL PROVISIONS. TO CORRECT THE ERRONEOUS OUTPUT FROM THE AUTOMATED PAY SYSTEM, ITEM #140 WILL BE ELIMINATED AND MOBILIZATION PAYMENTS WILL BE MADE MANUALLY VIA THIS CHANGE.

NO COST AND NO TIME ADJUSTMENT FOR THIS CHANGE.

Items:	¡215,000,000.00)
Force Account:	$0.00
Agreed Price:	$0.00
Adj. of Comp.	¡215,000,000.00
Total:	**$0.00**
Time:	**(NONE)**

EUGENE MALLETTE,
by: Assistant Division Chief

Bob Molera

Bob Molera

Division of Construction
1120 "N" Street, MS-44, Sacramento, CA 95814
Fax Number: (916) 654-5735
To Confirm Transmission, Call (916) 654-2735

STATE OF CALIFORNIA - DEPARTMENT OF TRANSPORTATION

CONTRACT CHANGE ORDER MEMORANDUM

TO: PETER SIEGENTHALER / Gary Pursell	FILE: **E.A.** 04 - 0120F4
FROM: Gary Pursell	**CO-RTE-PM** SF-80-13.2/13.9
	FED. NO.
CCO#: **20** SUPPLEMENT#: **0** Category Code: **AXZZ**	CONTINGENCY BALANCE (incl. this change) **$148,652,590.00**
COST: **$0.00** INCREASE ☐ DECREASE ☐	HEADQUARTERS APPROVAL REQUIRED? ☑ YES ☐ NO
SUPPLEMENTAL FUNDS PROVIDED: **$0.00**	IS THIS REQUEST IN ACCORDANCE WITH ENVIRONMENTAL DOCUMENTS? ☑ YES ☐ NO
CCO DESCRIPTION: SAS Mobilization	**PROJECT DESCRIPTION:** CONSTRUCT SELF-ANCHORED SUSPENSION BRIDGE

LOCATION: IN SAN FRANCISCO COUNTY IN SAN FRANCISCO FROM 0.6 KM TO 1.3 KM EAST OF THE YERBA BUENA TUNNEL EAST PORTAL

THIS CHANGE ORDER PROVIDES FOR:

Allowing the Department to provide accurate monthly progress payments for mobilization per Special Provisions Section 10-1.21, "Mobilization." Due to the unique mobilization payment limits and payment schedule, i.e., 15% rather than 10% cap for progress pay purposes and an early payment schedule based on monthly progress payment number rather than percent complete, the Department's automated payment system was unable to accurately process monthly pay estimates.

Over a period of three weeks, every effort was made to correct the erroneous output from the automated pay system, to no avail. To correct the problem and provide payment to the Contractor as required in the contract, Contract Item #140, Mobilization, will be eliminated. This will nullify the programmed payment schedule and cap contained in the automatic payment system. Alternately, Mobilization payments required in the contract will be made manually via this CCO.

On May 23, 2006, John Tapping, Toll Program Coordinator, gave verbal authorization to proceed with the Contract Change Order. Failure to proceed with corrective measures at this point would have resulted in a delay of substantial payment to the Contractor.

Item No. 140, Mobilization will be eliminated 100%. The contractor will be paid per the Special Provisions of the Contract at adjustment compensation lump sum. Since this CCO is administrative only no other concurrence is necessary.

No adjustment of contract time is warranted, as this change does not affect the controlling operation.

CONCURRED BY:

Construction Engineer:	Gary Pursell GP	Date5/23/2006
Bridge Engineer:	Rick Morrow	Date5/23/2006
FHWA Representative:		Date
Project Engineer:		Date
Other (specify):		Date
		Date
		Date
District Prior Approval By:		Date
HQ (Issue Approve) By:		Date
Resident Engineer's Signature:	Gary Pursell	Date 5/25/06

ESTIMATE OF COST

	THIS REQUEST	TOTAL TO DATE
ITEMS	($215,000,000.00)	($215,000,000.00)
FORCE ACCOUNT	$0.00	$0.00
AGREED PRICE	$0.00	$0.00
ADJUSTMENT	$215,000,000.00	$215,000,000.00
TOTAL	$0.00	$0.00

FEDERAL PARTICIPATION

☐ PARTICIPATING ☐ PARTICIPATING IN PART ☑ NONE
☐ NON-PARTICIPATING (MAINTENANCE) ☐ NON-PARTICIPATING

FEDERAL SEGREGATION (if more than one Funding Source or P.I.P. type)
☐ CCO FUNDED PER CONTRACT ☐ CCO FUNDED AS FOLLOWS

FEDERAL FUNDING SOURCE	PERCENT

CONTRACT CHANGE ORDER

Change Requested by: Engineer

CCO: 21	Suppl. No. 0	Contract No. 04 - 0120F4	Road SF-80-13.2/13.9	FED. AID LOC.:

To: **AMERICAN BRIDGE/FLUOR ENTERPRISES INC A JOINT VENT**

You are directed to make the following changes from the plans and specifications or do the following described work not included in the plans and specifications for this contract. ***NOTE: This change order is not effective until approved by the Engineer.***

Description of work to be done, estimate of quantities and prices to be paid. (Segregate between additional work at contract price, agreed price and force account.) Unless otherwise stated, rates for rental of equipment cover only such time as equipment is actually used and no allowance will be made for idle time. This last percentage shown is the net accumulated increase or decrease from the original quantity in the Engineer's Estimate.

Increase size of Cross Beam Stiffeners, change the tower field splices, add seal welds to the tower struts and install tower intermediate stiffener plates at Skin Plate "D" as shown in this change order:

The following revised and supplemental plan sheets detail the changes addressed in this change order:

Revised Contract Plan Sheets: 532R1, 538R2, 539R2, 541R1, 542R1, 543R1, 544R1, 545R1, 546R1, 547R1, 548R1, 549R1, 550R1, 551R1, 552R1, 553R1, 554R1, 555R1, 556R1, 557R1, 558R1, 559R1, 560R1, 561R1, 570R1, 578R1, 579R1, 580R1, 581R1, 583R1, 584R1, 585R1, 586R1, 587R1, 588R1, 597R1, 598R1, 608R1, 609R1, 611R1, 612R1, 656R1, 659R1 and 661R1 (of 1204).

Added Supplemental Contract Plan Sheets: 541S1 and 561S1 (of 1204).

Revise the third paragraph of Section 5-1.01, "WORKING DRAWINGS" in the Special Provisions as shown on Sheet 4 of this change order.

Revise the fourth paragraph of Section 10-1.59, "STEEL STRUCTURES", subsection "ASSEMBLY", subsection "Tower", in the Special Provisions as shown on Sheet 4 of this change order.

Revise the seventh paragraph of Section 10-1.59, "STEEL STRUCTURES", subsection "MATERIALS", in the Special Provisions as shown on Sheet 4 of this change order.

Revise the third paragraph of Section 10-1.59, "STEEL STRUCTURES", subsection "FABRICATION", subsection "Hinge K Pipe Beam" in the Special Provisions as shown on Sheet 4 of this change order.

Revise the fourth paragraph of Section 10-1.59, "STEEL STRUCTURES", subsection "FABRICATION", subsection "Bolted Connections" in the Special Provisions as shown on Sheet 5 of this change order.

Revise Special Provisions, Section 10-1.59, "STEEL STRUCTURES", subsection "SHOP WELDING", subsection "Design Details", Item G.4.l as shown on Sheet 5 of this change order.

This change order resolves the costs associated with Contractor Request For Information (RFI) Nos. 69 and 143 with respect to changes listed above.

CONTRACT CHANGE ORDER

Change Requested by: Engineer

CCO: 21	Suppl. No. 0	Contract No. 04 - 0120F4	Road SF-80-13.2/13.9	FED. AID LOC.:

Estimate of Increase in Contract Item at Contract Price:

Item No. 55: FURNISH STRUCTURAL STEEL (BRIDGE) (BOX GIRDER)
183794 KG (+0.63%) @ $9.00 /KG = +$1,654,146.00 (+0.63%)

Item No. 56: ERECT STRUCTURAL STEEL (BRIDGE) (BOX GIRDER)
183794 KG (+0.63%) @ $1.00 /KG = +$183,794.00 (+0.63%)

The quantity increase shown herein for Item #55, FURNISH STRUCTURAL STEEL (BRIDGE) (BOX GIRDER), when combined with the quantity shown in the Engineer's Estimate, and as modified by any previous change orders or revisions to dimensions made by the Engineer, shall be the final quantity for which payment will be made.

The quantity increase shown herein for Item #56, ERECT STRUCTURAL STEEL (BRIDGE) (BOX GIRDER), when combined with the quantity shown in the Engineer's Estimate, and as modified by any previous change orders or revisions to dimensions made by the Engineer, shall be the final quantity for which payment will be made.

Total cost for Increase in Contract Item.....$1,837,940.00

Estimate of Decrease in Contract Item at Contract Price:

Item No. 52: FURNISH STRUCTURAL STEEL (BRIDGE) (TOWER)
-45472 KG (–0.35%) @ $10.00 /KG = –$454,720.00 (–0.35%)

Item No. 53: ERECT STRUCTURAL STEEL (BRIDGE) (TOWER)
-45472 KG (–0.35%) @ $1.00 /KG = –$45,472.00 (–0.35%)

The quantity decrease shown herein for Item #52, FURNISH STRUCTURAL STEEL (BRIDGE) (TOWER), when combined with the quantity shown in the Engineer's Estimate, and as modified by any previous change orders or revisions to dimensions made by the Engineer, shall be the final quantity for which payment will be made.

The quantity decrease shown herein for Item #53, ERECT STRUCTURAL STEEL (BRIDGE) (TOWER), when combined with the quantity shown in the Engineer's Estimate, and as modified by any previous change orders or revisions to dimensions made by the Engineer, shall be the final quantity for which payment will be made.

Total cost for Decrease in Contract Item.....<$500,192.00>

CONTRACT CHANGE ORDER

Change Requested by: Engineer

CCO: 21	Suppl. No. 0	Contract No. 04 - 0120F4	Road SF-80-13.2/13.9	FED. AID LOC.:

Adjustment of Compensation at Lump Sum:

1. Reimburse the Contractor for additional caulking, paint repair due to additional field welding, bolt touch-up and a decrease for cap screws associated with this change order. For this work, the contractor will be paid the sum of $73,912.00. This sum constitutes full compensation, including markups, for this change.

2. Reimburse the Contractor for additional detailing associated with this change order. For this work, the contractor will be paid the sum of $26,510.00. This sum constitutes full compensation, including markups, for this change.

3. Reimburse the Contractor for additional field erection changes to the OBG associated with this change order. For this work, the contractor will be paid the sum of $329,167.00. This sum constitutes full compensation, including markups, for this change.

4. For the changes in character of work for field erection changes to the tower as a result of this change order, the Department shall receive a credit of <$195,436.00>. This sum constitutes full compensation, including markups, for this change.

5. For the changes in character of work to Clean and Paint the Structural Steel (Tower) as a result of this change order, the Department shall receive a credit of <$10,417.00>. This sum constitutes full compensation, including markups, for this change.

6. For the changes in character of work to Clean and Paint the Structural Steel (Box Girder) as a result of this change order, the Contractor will be paid the sum of $62,868.00. This sum constitutes full compensation, including markups, for this change.

Estimated Cost of Adjustment of Compensation at Lump Sum $286,604.00

Consideration of a time adjustment will be deferred until completion of the work specified herein. Determination of a commensurate time adjustment will be made in accordance with Section 10-1.13, "PROGRESS SCHEDULE (CRITICAL PATH METHOD)" and Section 10-1.14, "TIME-RELATED OVERHEAD" of the Special Provisions, as well as Section 8-1.07, "LIQUIDATED DAMAGES", of the Standard Specifications.

Estimated Cost: Increase ☑ Decrease ☐ **$1,624,352.00**

By reason of this order the time of completion will be adjusted as follows: Deferred

Submitted by

Signature	Resident Engineer Gary Pursell, P.E., Sup.T.E.	Date 8/28/07

Approval Recommended by

Signature	Supervising Bridge Engineer Richard Morrow, P.E., Sup. BE	Date 8/28/07

Engineer Approval by

Signature	Principal Bridge Enigneer Peter Siegenthaler, P.E., Prin. BE	Date 8/28/07

We the undersigned contractor, have given careful consideration to the change proposed and agree, if this proposal is approved, that we will provide all equipment, furnish the materials, except as may otherwise be noted above, and perform all services necessary for the work above specified, and will accept as full payment therefor the prices shown above.

NOTE: If you, the contractor, do not sign acceptance of this order, your attention is directed to the requirements of the specifications as to proceeding with the ordered work and filing a written protest within the time therein specified.

Contractor Acceptance by

Signature	(Print name and title)	Date

In the Special Provisions, Section 5-1.01, "WORKING DRAWINGS," in the third paragraph, revise Item B as follows:

"B. Drawings shall be 559 mm x 864 mm, or 419 mm x 648 mm, or 279 mm x 432 mm in size, at the option of the Engineer. Supplements and calculations shall be 215 mm x 280 mm in size."

REGISTERED PROFESSIONAL ENGINEER
RICHARD T. MORROW JR.
No. 33358
Exp. 6/30/2008
CIVIL
STATE OF CALIFORNIA

Revise Special Provisions, Section 10-1.59, "STEEL STRUCTURES," subsection "ASSEMBLY," subsection "Tower," the fourth paragraph as follows:

"Corners of contacting plates of bolted connections may be beveled up to 6 mm to clear weld beads subject to approval of the Engineer."

Revise Special Provisions, Section 10-1.59, "STEEL STRUCTURES," subsection "MATERIALS," the seventh paragraph as follows:

"Steel plate designated as Pipe Beam Grade 485 and Shear Link Grade 485 on the plans shall conform to the requirements in ASTM Designation: A 709M, Grade HPS 485W with Supplementary Requirement S8, "Ultrasonic Evaluation," Supplementary Requirement S84 "Fracture-Critical, F, Material; Toughness Testing and Marking" tested for Zone 3; and Supplementary Requirement S93, "Limitations on Weld Repair (Fracture Critical Material Only)." Charpy V-Notch tests for the as-fabricated pipe beam and shear link heat affected zone (HAZ) shall meet 48 joules (J) minimum average, and 38 J minimum individual at –18° C."

Revise Special Provisions, Section 10-1.59, "STEEL STRUCTURES," subsection "FABRICATION," subsection "Hinge K Pipe Beam," the third paragraph as follows:

"The Contractor may select a different thickness and Grade for the pipe beam tubulars subject to review and approval of the Engineer. The thickness and Grade shall be such that the yield capacity in shear and flexure of the tubulars is between 100% and 110% of the design capacity as calculated from what is shown on the plans. The exterior radius shall remain 950 mm. Alternative grades shall meet 20% minimum tensile elongation and ASTM A508M, Grade 4N Charpy Impact requirements unless otherwise approved by the Engineer. "

STATE OF CALIFORNIA
DEPARTMENT OF TRANSPORTATION

HC-5(Rev. 5/93)

CONTRACT CHANGE ORDER NO. 21 SUPPL. NO. ---

ROAD 04-SF-80-13.2, 13.9 SHEET 5 OF 51 SHEETS

FEDERAL NO.(S) _____ CONTRACT NO.: 04-0120F4

Revise Special Provisions, Section 10-1.59, "STEEL STRUCTURES," subsection "FABRICATION," subsection "Bolted Connections," the fourth paragraph as follows:

"Alignment and contact for the tower shaft bolted splice shall conform to the requirements of AWS D1.5, Section 3.5.1.14, except that filler plates will not be permitted between the exterior face of the skin plates and the exterior splice plates. Attention is directed to section 10-1.59, "STEEL STRUCTURES," subsection "FABRICATION," subsection "Fabrication/Erection Procedure and Mock-Ups." The tower lift erection splice mock-up(s) shall demonstrate such contact. Splice plates may be heat bent to achieve contact. At the option of the Contractor, tower lift ends shall be milled to bear or shimmed such that the gap shall be no greater than 2 mm. Thermal cut surfaces shall meet the requirements of AWS D1.5, Section 3.2.2. Shimming of up to 5 mm thickness will be permitted. At any given location, the shim shall be a single thickness of steel. Gaps between shims and skin plates shall be filled with silicone caulk prior to installation of the exterior splice plates. Over-size holes will not be permitted. The Contractor shall prepare a work plan that describes the procedure for meeting these requirements and that shall be approved by the Engineer before use. The work plan shall be demonstrated on the mock-up required above. The mating segments of each lift shall be mated at the fabrication site, and the required fit-up demonstrated, before moving each lift to the final assembly site. Bolted connections shall conform to the requirements in the Research Council on Structural Connections, "Specification for Structural Joints Using ASTM A325 or A490 Bolts," 2000 (RCSC Specification), with the following revisions:"

Revise Special Provisions, Section 10-1.59, "STEEL STRUCTURES," subsection "SHOP WELDING," subsection "Design Details," Item G.4.l as follows:

"l. The tolerance of the gap in the vertical direction for longitudinal stiffener bolted splice is ± 5 mm."

REGISTERED PROFESSIONAL ENGINEER
MARWAN N. NADER
No. C 054426
Exp. 12/31/07
CIVIL
STATE OF CALIFORNIA

STATE OF CALIFORNIA - DEPARTMENT OF TRANSPORTATION

CONTRACT CHANGE ORDER MEMORANDUM

TO: Pete Siegenthaler, Prin. TE / Gary Pursell, P.E., Sup T.E.	FILE: E.A. 04 - 0120F4
FROM: Gary Pursell, P.E., Sup.T.E.	CO-RTE-PM SF-80-13.2/13.9
	FED. NO.
CCO#: 21 SUPPLEMENT#: 0 Category Code: CHPA	CONTINGENCY BALANCE (incl. this change) $141,169,525.58
COST: $1,624,352.00 INCREASE ☑ DECREASE ☐	HEADQUARTERS APPROVAL REQUIRED? ☑ YES ☐ NO
SUPPLEMENTAL FUNDS PROVIDED: $0.00	IS THIS REQUEST IN ACCORDANCE WITH ENVIRONMENTAL DOCUMENTS? ☑ YES ☐ NO
CCO DESCRIPTION: Tower Splice Alteration	**PROJECT DESCRIPTION:** CONSTRUCT SELF-ANCHORED SUSPENSION BRIDGE

Original Contract Time:	Time Adj. This Change:	Previously Approved CCO Time Adjustments:	Percentage Time Adjusted: (including this change)	Total # of Unreconciled Deferred Time CCO(s): (including this change)
2490 Day(s)	DEF Day(s)	30 Day(s)	1 %	0

THIS CHANGE ORDER PROVIDES FOR:

Increasing the size of Cross Beam Stiffeners, changing the tower field splices, adding seal welds to the tower struts and installing tower intermediate stiffener plates at Skin Plate "D" as shown in this change order.

This change order provides for constructability improvements and clarifies contract requirements. These changes were prepared and proposed for incorporation into the bid documents as Addendum No. 8. The Toll Bridge Project Oversight Committee (TBPOC) directed that Addendum No. 8 not be issued and that these (and other) changes be incorporated by Contract Change Order after contract approval.

This change order incorporates modifications detailed in change requests prepared by the consultant designer, T.Y. Lin International - Moffat & Nichol (J.V.) and transmitted to the Resident Engineer as design Change Request No. 10, 18.1, 18.2, 169 and 179.

1. CHANGES TO ORTHOTROPIC BOX GIRDER DECK (OBGD) CROSS BEAMS.

Increases the size of the stiffeners and adds an additional 12,000 bolts to the OBG crossbeam. This results in an increase of 183,794 kilograms of Structural Steel (Bridge) (Box Girder).

2. CHANGES TO TOWER FIELD SPLICES.

Details for field splicing of the tower legs of the Self-Anchored Suspension Bridge, raised constructability concerns as presented in the bid documents. To simplify construction, the designer proposed field splice changes that have been demonstrated successfully in several full-scale wood models commissioned prior to bid opening. After completion of the models, additional changes were identified to provide improved access for fabrication and inspection, resolve conflicts, and provide additional clarity to the contract plans. These changes are detailed in design Change Request Nos. 10 and 18.1, that resulted in a reduction of 45,472 kilograms of structural steel in the tower.

3. CHANGES TO TOWER STRUTS.

Seal welds were added to the tower leg doubler plate to prevent moisture intrusion and reduce maintenance. The openings on the outer plate were enlarged to accommodate these seal welds.

4. REINSTATE TOWER INTERMEDIATE STIFFENER PLATES AT SKIN PLATE "D".

Addendum No. 4 modified the stiffener plates in the tower to improve constructability due to limited access to certain welds. Some of the stiffener plates were inadvertently omitted in the revised plan sheets. This change order reinstates the missing stiffener plates, thereby resolving Addendum No. 4's intent to make the welding more accessible.

ADA Notice: For individuals with sensory disabilities, this document is available in alternate formats. For information call: (916) 654-6410 or TDD (916) 654-3880 or write Records and Forms Management, 1120 N Street, MS-89, Sacramento, CA 95814.

The increase and decrease of contract items at contract unit prices results in a net increase of $1,337,748.00.

For the changes in character of work related to additional caulking, paint repair, detailing and field erection procedures and the reduction of cleaning and painting the structural steel beyond contract item work, the Contractor will receive a lump sum payment of $286,604.00.

The total cost of this change order is $1,624,352.00, which can be financed from the contingency funds. A detailed cost analysis for this change order has been placed into the project files.

Adjustment of contract time is deferred pending completion of the work specified in this change as the work may impact the controlling operation.

This change order received concurrences from Michael Whiteside (Toll Bridge Design Spec Manager), Marwan Nader (Designer of Record), TBPOC, Rick Morrow (Bridge Rep), Gary Pursell (Resident Engineer), Rob Kobal (HQ Oversight), Pete Siegenthaler (Principal Bridge Engineer). Ken Terpstra (Program Manager) and Reza Valezadeh (CT Oversight). Maintenance concurrence is not required for this change.

This change order received approval from TBPOC on February 15, 2007, for a not-to-exceed amount of $2,300,000.00.

This change order received a Headquarters "Authority to Proceed" (HQ ATP) on July 21, 2006, and an "Issue and Approve" requiring the Contractor's signature on July 13, 2007.

The change order was submitted to the Contractor for signature on July 13, 2007 and has yet to be executed by the Contractor. It appears that the Contractor will not sign the change order due to the fact that their overseas fabricator in China does not agree with the unit price adjustments at contract item price. The Contractor has been unable to support that an adjustment of compensation is warranted for fabrication.

Since the Contractor did not return the change order signed, on August 24, 2007, this change order received a revised "Issue and Approve" from Headquarters to process the change order unilaterally. The change order was then approved by the Principal Engineer on August 28, 2007. Copies of Headquarters' approvals are attached for reference.

CONCURRED BY:

Construction Engineer:	Res. Eng., Gary Pursell, Sup. TE	Date	7/19/06
Bridge Engineer:	Struct Rep, Rick Morrow, Sup TE	Date	7/19/06
Project Engineer:	CT Oversight, Reza Valizadeh, P.E	Date	2/7/06
Project Manager:	Proj Manager, Ken Terpstra	Date	3/15/07
FHWA Rep.:	PCE, Pete Siegenthaler, Prin TE	Date	7/19/06
Environmental:	Design of Record, Marwan Nader,	Date	6/23/06
Other (specify):	HQ, Rob Kobal	Date	7/20/06
Other (specify):	TBPOC	Date	2/15/07
District Prior Approval By:		Date	
HQ (Issue Approve) By:	HQ, Ken Darby	Date	7/21/06
Resident Engineer's Signature:	Gary Pursell 8/28/07	Date	

ESTIMATE OF COST

	THIS REQUEST	TOTAL TO DATE
ITEMS	$1,337,748.00	$1,337,748.00
FORCE ACCOUNT	$0.00	$0.00
AGREED PRICE	$0.00	$0.00
ADJUSTMENT	$286,604.00	$286,604.00
TOTAL	$1,624,352.00	$1,624,352.00

FEDERAL PARTICIPATION

☐ PARTICIPATING ☐ PARTICIPATING IN PART ☑ NONE
☐ NON-PARTICIPATING (MAINTENANCE) ☐ NON-PARTICIPATING

FEDERAL SEGREGATION (if more than one Funding Source or P.I.P. type)
☑ CCO FUNDED PER CONTRACT ☐ CCO FUNDED AS FOLLOWS

FEDERAL FUNDING SOURCE	PERCENT

ADA Notice: For individuals with sensory disabilities, this document is available in alternate formats. For information call: (916) 654-6410 or TDD (916) 654-3880 or write Records and Forms Management, 1120 N Street, MS-89, Sacramento, CA 95814.

CONTRACT CHANGE ORDER

Change Requested by: Engineer

CCO 22	Suppl. No. 0	Contract No. 04 - 0120F4	Road SF-80-13.2/13.9	FED. AID LOC.:

To: AMERICAN BRIDGE/FLUOR ENTERPRISES INC A JOINT VENT

You are directed to make the following changes from the plans and specifications or do the following described work not included in the plans and specifications for this contract. ***NOTE: This change order is not effective until approved by the Engineer.***

Description of work to be done, estimate of quantities and prices to be paid. (Segregate between additional work at contract price, agreed price and force account.) Unless otherwise stated, rates for rental of equipment cover only such time as equipment is actually used and no allowance will be made for idle time. This last percentage shown is the net accumulated increase or decrease from the original quantity in the Engineer's Estimate.

Extra Work at Lump Sum:

1. Revise Contract Plan Sheet Numbers 521, 629 and 651 (of 1204), with Contract Plan Sheet Numbers 521R1, 629R1 and 651R1 (of 1204), as shown in this change order.

2. Revise Item 3 of the fifth paragraph in Section 10-1.44, "CABLE TIE-DOWN", of the Special Provisions, as shown in this change order.

3. Revise the third paragraph of the Special Provisions, Section 10-1.59, "STEEL STRUCTURES", subsection "FABRICATION", subsection "Fabrication/Erection Procedure and Mock-Ups", by adding (2) new additional locations "R" and "S" requiring fabrication and erection procedures, as shown below:
   "R. Tower Saddle
   S. Hinge K Assembly"

4. Revise the nondestructive testing (NDT) table of the Special Provisions, Section 10-1.59, "STEEL STRUCTURES", subsection "INSPECTION AND TESTING", as shown in this change order (changes shown in bold italics).

5. Revise Note 9 and Add Note 14 to the NDT table shown in the Special Provisions, Section 10-1.59, "STEEL STRUCTURES", subsection "INSPECTION AND TESTING", as shown in this change order.

For this work, the contractor will be paid the sum of $61,050.00. This sum constitutes full compensation, including markups, for this change.

Estimated cost of Extra Work at Lump Sum $61,050.00

Estimated Cost: Increase ☑ Decrease ☐ **$61,050.00**

By reason of this order the time of completion will be adjusted as follows: 0 days

Submitted by

Signature Gary Pursell	Resident Engineer: Gary Pursell, P.E., Sup.T.E.	Date 1/23/07

Approval Recommended by

Signature Gary Pursell	Construction Engineer: Gary Pursell, P.E., Sup T.E.	Date 2/9/07

Engineer Approval by

Signature Gary Pursell	(Print name and title) Gary Pursell, P.E., Sup T.E. - Construction Engineer	Date 2/9/07

We the undersigned contractor, have given careful consideration to the change proposed and agree, if this proposal is approved, that we will provide all equipment, furnish the materials, except as may otherwise be noted above, and perform all services necessary for the work above specified, and will accept as full payment therefor the prices shown above.

NOTE: If you, the contractor, do not sign acceptance of this order, your attention is directed to the requirements of the specifications as to proceeding with the ordered work and filing a written protest within the time therein specified.

Contractor Acceptance by

Signature Michael D. Flowers	(Print name and title) Michael D. Flowers Project Director	Date 2-1-07

STATE OF CALIFORNIA
DEPARTMENT OF TRANSPORTATION

HC-5 (Rev. 5/93)

CONTRACT CHANGE ORDER NO. 22 SUPPL. NO. ---

ROAD 04-SF-80-13.2, 13.9 SHEET 2 OF 8 SHEETS

FEDERAL NO.(S) CONTRACT NO.: 04-0120F4

To **American Bridge / Fluor Enterprises Inc., A Joint Venture**, Contractor

You are hereby directed to make herein described changes from the plans and specifications or do the following described work not included in the plans and specifications of the contract.

NOTE: This change order is not effective until approved by The Chief Engineer.

Description of work to be done, estimate of quantities, and prices to be paid. Segregated between additional work at contract price and force account. Unless otherwise stated, rates for rental equipment cover only such time as equipment is actually used and no allowance will be made for idle time.

CHANGE REQUESTED BY THE **ENGINEER**

The last percentage shown is the net accumulated increase or decrease from the original quantity in the Engineer's Estimate.

2. Replace the fifth paragraph of Section 10-1.44, "CABLE TIE-DOWN," with the following (changes shown in *bold italics*):

"In addition to the requirements in Section 50-1.02 "Drawings," of the Standard Specifications, cable tie-down anchor working drawings shall include, but are not limited to, the following:

1. Details of proposed corrosion protection measures.
2. Details and sequence of monostrand stressing operation to avoid mechanical interlocking between strands.
3. Details and sequence of operations for detensioning and replacing individual ~~tendons~~ ***strands within a tendon.***
4. Repair procedure for the sheathing.
5. Material specifications and calculations."

4. Replace the nondestructive testing table of the Special Provisions, Section 10-1.59, "STEEL STRUCTURES," subsection "INSPECTION AND TESTING," with the following (changes shown in *bold italics*):

COMPONENT		Weld Type			Extent & Type of Testing			Notes
		CJP	PJP	Fillet	RT	UT	MT	
1.BOX GIRDER 1.1 Box Shell								
Transverse splice weld (Deck plate: A)	shop field	X X			5%	100% 100%	 100%	
Transverse splice weld (Side plate: B,F)	shop field	X X			5%	100% 100%	 100%	
Transverse splice weld (Bottom plate: D)	shop field	X X			5%	100% 100%	 100%	
Transverse splice weld (Side plate: C,E,G,H,I,L,M,N, "K" &"Vertical")	shop field	X X				** **		
Longitudinal weld: Deck plate: A		X				100%		
Longitudinal splice weld (Bottom plate: D)		X				100%		
Longitudinal splice weld (Side plate: C,E,G,H,I,L,M,N, "K" &"Vertical")		X				100%		(B & F are n/a)
Box corner welds		X	 X	 X		100%	 100%	
Closed rib splice		X				100%		
Closed rib to shell plate:			X			15%	10%	UT Shall include at least 15% of the tack welds
Stiffener (open rib) to box plate				X			10%	

COMPONENT	Weld Type			Extent & Type of Testing			Notes
	CJP	PJP	Fillet	RT	UT	MT	
Floorbeam to Deck plate	X		X		100%	50%	
Floorbeam to other box shell plates At Crossbeam penetrations Elsewhere	X	X	X X		100%	25% 10%	
Longitudinal Shear Plate to Deck Plate			X			25%	
Longitudinal Shear Plate to other Box shell plates			X			10%	
Deck plate to drain plates	X				15%		
Deck plate transverse splice at Seismic Joint	X	X		5%	100% 100%	100%	
1.2. Box Internal Stiffening							
Floorbeam splice: Bottom 1 m Remainder of lower half Upper half	X X X				100% 50% 15%		
Floorbeam web / Diaphragm to skin plate stiffener	X	X	~~X~~ X		100%	25% 100%	
Floorbeam web to floorbeam web stiffener	X	X	X		100%	25%	
Diaphragm plate to closed rib	X	X			~~100%~~	100% 100%	See Note 14
Ground end of diaphragm to closed rib weld for full length of grinding plus 50mm each end	X	X	X			100%	Additional to NDT specified for weld
Longitudinal Shear Plate to Floorbeam	X	X	X		100%	15%	
Longitudinal Shear Plate Vertical splice	X				**		
Longitudinal Shear Plate to top and bottom plate	X		X			15%	
1.3. Girder at Piers							
All SPCM welds	X	X	X		100%	100% 100%	
Non-SPCM Welds	Per Sections 1.1, 1.2 & 1.5 of this Table						
Saddle Grillage welds	X	X	X		25%	25%	
Saddle welds	X	X	X		25%	25%	
1.4 Other box welds							
SPCM Cable Bracket welds	X	X	X		100%	100% 100%	
Deviation & Jacking Frame Saddles: Plates to Castings	X	X	X		100%	100% 25%	
Deviation & Jacking Frame Saddles: Plate welds	X	X	X		100%	100% 25%	
Other Welds in SPCMs	X	X	X		100%	100% 100%	

COMPONENT	Weld Type			Extent & Type of Testing			Notes
	CJP	PJP	Fillet	RT	UT	MT	
Other welds	X	X	X		25%	10%	
Ends of welds at locations of required grinding for full length of grinding plus 50 mm each end	X	X	X			100%	Additional to NDT specified for weld
2. CROSSBEAM							
All SPCM Welds	X	X	X		100%	100% 100%	
Other welds	X	X	X		25%	10%	
Ends of welds at locations of required grinding for full length of grinding plus 50 mm each end	X	X	X			100%	Additional to NDT specified for weld
3. TOWER							
Skin plate butt welds: Horizontal	X				100%	25%	
Skin plate butt welds: Vertical	X	X			100% 25%	25% 25%	
Longitudinal Stiffener butt welds	X				100%		
Longitudinal stiffener to skin plate	X	X	X		100% 25%	25% 25%	
Diaphragm butt welds	X				100%		
Diaphragm to Skin Plate	X	X	X		100% 25%	25% 25%	
Diaphragm to Longitudinal Stiffener (incl. Fit Lugs)	X	X	X		100%	100% 25%	
Tower Strut Welds & Cross Bracing Welds	X	X	X		100%	100% 100%	
Grillage welds	X	X	X		***	*** 25%	
Tower Saddle welds	X	X	X		100%	100% 100% 25%	
Skin Plate to Tower Base Plate	X	X			25%	50%	
Bearing Stiffener Welds at Tower Base Anchor Bolt Assemblies	X	X	X		25%	25%	
Other Tower welds	X	X	X		25%	10%	
Tower Base Shear Plates to the Skin Plate	X	X			****	****	
4. OTHER WELDS NOT SPECIFIED ABOVE							
Welds in SPCMs	X	X	X		100%	100% 100%	
Other welds	X	X	X		25%	10%	

COMPONENT	Weld Type			Extent & Type of Testing			Notes
	CJP	PJP	Fillet	RT	UT	MT	
Ends of welds at locations of required grinding for full length of grinding plus 50mm each end	X	X	X			100%	Additional to NDT specified for weld

5. Revise Note 9 and add Note 14 to the Special Provisions, following the nondestructive testing table in Section 10-1.59, "STEEL STRUCTURES," subsection "INSPECTION AND TESTING," as follows:

Notes:

"9) No UT examination is required for PJP weld sizes up to 25 mm except for the closed rib PJP welds. For PJP weld sizes greater than 25 mm, UT examination shall confirm that the specified minimum weld size has been achieved. UT examination is not required provided all of the following conditions are met:

~~(a) Minimum weld size, excluding reinforcement, is increased by a minimum of 5 mm over that required by the contract plans; and the remaining root face still satisfies minimum requirement of the standard weld joint detail in AWS D1.5;~~

~~(b)~~ (a) Specific inspection hold points are established after the root pass is completed and after the weld is completed, in which the QC inspector completes and documents 100% visual inspection and 100% magnetic particle testing. These hold points are in addition to the continuous QC inspections required elsewhere in these specifications. Visual Inspection and MT of the root pass shall be performed with the weld joint at the preheat temperature but not to exceed 287° C (550° F)."

"14) With respect to the welds between the OBG diaphragm and the closed ribs, in addition to 100% MT of the completed and ground weld, the Contractor shall also MT the second side preparation after back gouging and before welding the second side."

REGISTERED PROFESSIONAL ENGINEER
JAMES B. REID
No. C 65028
Exp. 6/07
CIVIL
STATE OF CALIFORNIA

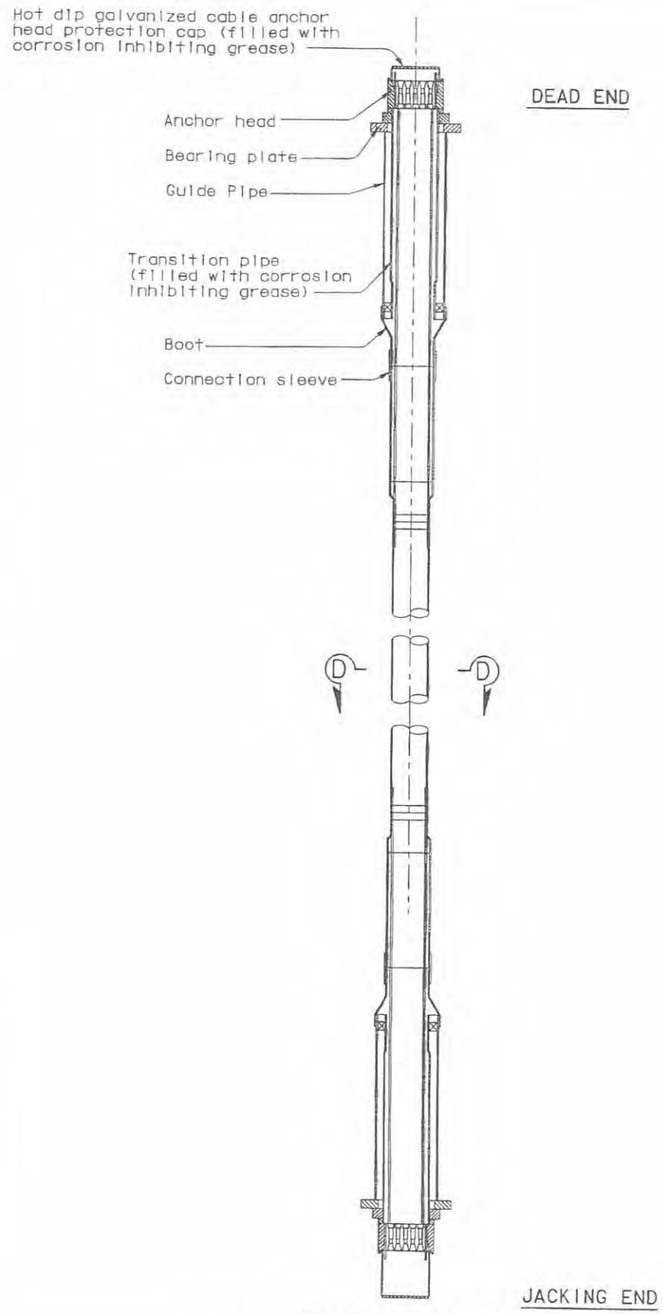

DEAD END

JACKING END

(For illustration only)

TIE-DOWN CABLE DETAILS

1:20

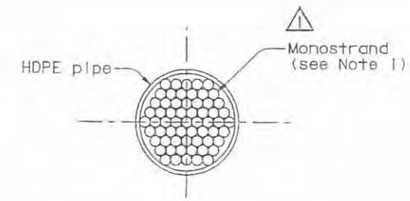

SECTION D-D

NTS

DIST.	COUNTY	ROUTE	KILOMETER POST TOTAL PROJECT	SHEET NO.	TOTAL SHEETS
04	SF	80	13.2/13.9	521R1	1204

REGISTERED ENGINEER - CIVIL

12-6-04

PLANS APPROVAL DATE

REGISTERED PROFESSIONAL ENGINEER John Sun No. C 54648 Exp. 12/31/05 CIVIL STATE OF CALIFORNIA

The State of California or its officers or agents shall not be responsible for the accuracy or completeness of electronic copies of this plan sheet.

T.Y. LIN / MOFFATT & NICHOL
825 BATTERY STREET
SAN FRANCISCO, CA 94111

Caltrans now has a web site! To get to the web site, go to: http://www.dot.ca.gov

REGISTERED PROFESSIONAL ENGINEER Marvin N. Nader No. C 054426 Exp. 12/31/07 CIVIL STATE OF CALIFORNIA

FOR REVISIONS ONLY

MARK	DATE	DESCRIPTIONS	BY	CH'D
1	07/21/06	REMOVE EPOXY COATING	MN	NV

REVISIONS

CONTRACT CHANGE ORDER NO. 22
SHEET 6 OF 8

LEGEND:

HDPE - High density polyethylene.

NOTES:

1. Each individual monostrand shall be fully coated with corrosion inhibiting grease and then encapsulated by a high-density polyethylene (HDPE) or high-density polypropylene (HDPP) smooth sheath.

100 % PS&E

ALL DIMENSIONS ARE IN MILLIMETERS UNLESS OTHERWISE SHOWN

R. Valizadeh/V. Toan/Y.L./W.L./F.C.
DESIGN OVERSIGHT
Rey Valizadeh / Vong Toan / Y. Liu
SIGN OFF DATE 07/21/06
Rev. Date: 5-18-98

	BY	CHECKED
DESIGN	J. Sun	J. Straski
DETAILS	S. Shi	J. Straski
QUANTITIES	J. Duxbury	S. Shi

PREPARED FOR THE STATE OF CALIFORNIA DEPARTMENT OF TRANSPORTATION

R. Manzanarez
PROJECT ENGINEER

BRIDGE NO. 34-0006L/R
KILOMETER POST 13.2/13.9

SAN FRANCISCO OAKLAND BAY BRIDGE
EAST SPAN SEISMIC SAFETY PROJECT
SELF-ANCHORED SUSPENSION BRIDGE
(SUPERSTRUCTURE & TOWER)

CABLE TIE-DOWN DETAILS NO. 2

ORIGINAL SCALE IN MILLIMETERS FOR REDUCED PLANS 0 10 20 30 40 50 60 70 80 90 100

CU 04
EA 0120F1

DISREGARD PRINTS BEARING EARLIER REVISION DATES

REVISION DATES (PRELIMINARY STAGE ONLY) 05/18/99 08/02/99 05/31/01 04/08/02 07/01/02 12/19/02

SHEET 104R1 OF

FILE => p:\bb\04-012001\sas readv august 2005\cco#22\deptd02.dgn

USERNAME => vignatovs DATE PLOTTED => 19 JUL 2006 TIME PLOTTED => 08:43:19

DIST.	COUNTY	ROUTE	KILOMETER POST TOTAL PROJECT	SHEET NO.	TOTAL SHEETS
04	SF	80	13.2/13.9	629R1	1204

George Baker
REGISTERED ENGINEER - CIVIL
12-6-04
PLANS APPROVAL DATE

REGISTERED PROFESSIONAL ENGINEER George S. Baker No. C57112 Exp. 12/31/07 CIVIL STATE OF CALIFORNIA

The State of California or its officers or agents shall not be responsible for the accuracy or completeness of electronic copies of this plan sheet.

T.Y. LIN / MOFFATT & NICHOL
825 BATTERY STREET
SAN FRANCISCO, CA 94111

Caltrans now has a web site! To get to the web site, go to: http://www.dot.ca.gov

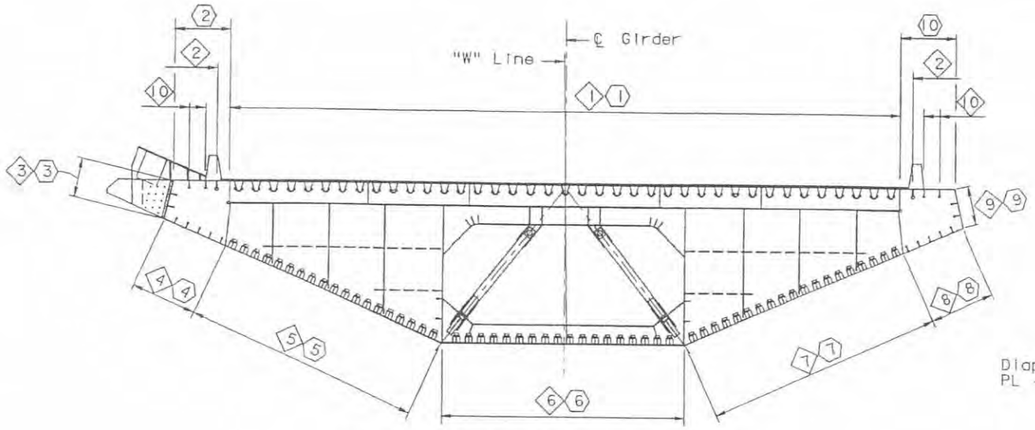

("W" LINE SECTION TYPE 1A SHOWN)

SECTION AT FLOORBEAM

1:100

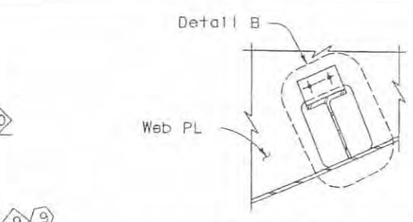

WT TYPE AT CROSSBEAM

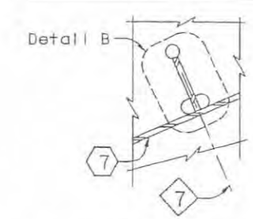

PLATE TYPE AT CROSSBEAM

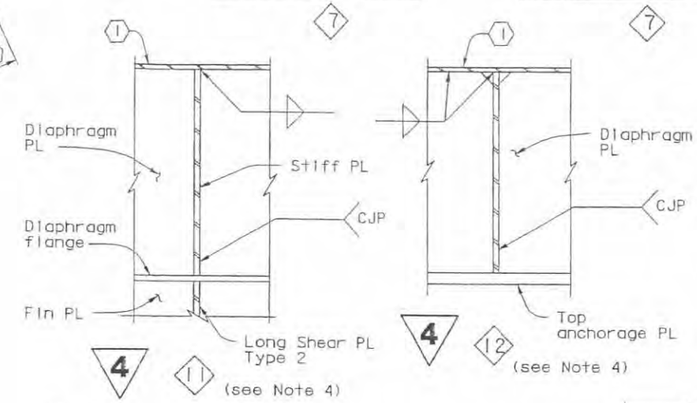

MARK	DATE	DESCRIPTIONS	BY	CH'D
1	07/21/06	ADD STIFFENER TYPES 13 THRU 18	GB	NV

REVISIONS

CONTRACT CHANGE ORDER NO. 22
SHEET 7 OF 8

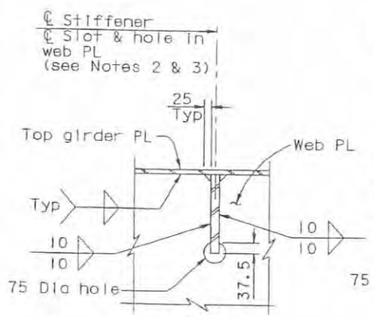

2

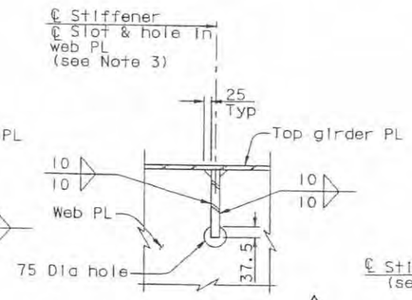

10, 13 thru 18

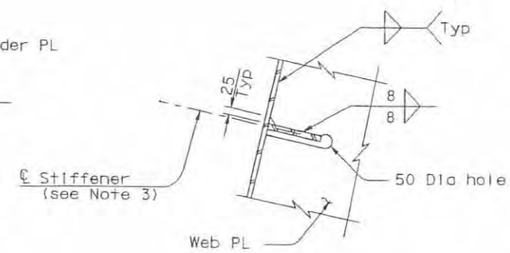

3 (see Note 5)

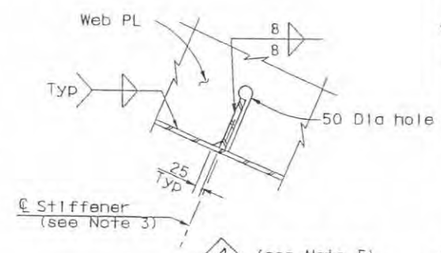

4 (see Note 5)

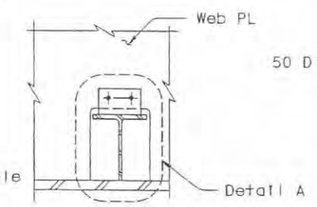

TYPICAL UNO

5 6 & 7 Except at crossbeam

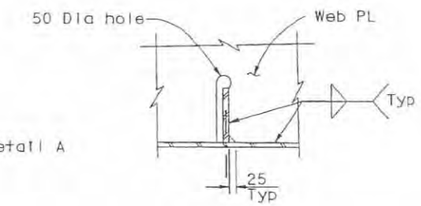

PLATE TYPE

5 6 & 7 Except at crossbeam

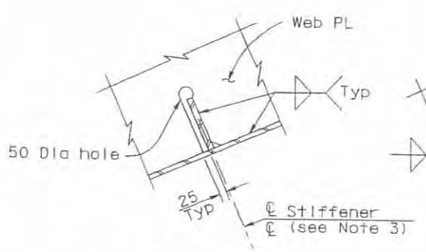

TYPICAL UNO

8

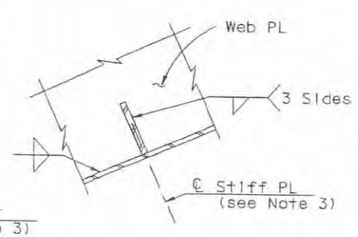

AT CROSSBEAM

8

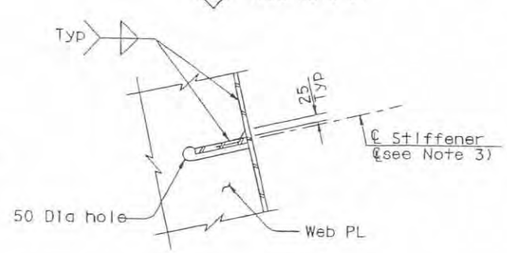

TYPICAL UNO

9

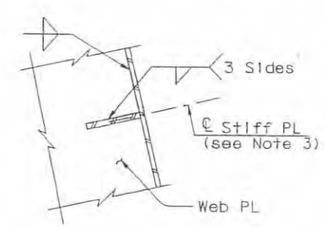

AT CROSSBEAM

9

STIFFENER DETAILS AT FLOORBEAM (see Note 3)

1:10

NOTES:

1. For Details A and B, see "Typical Girder Details No. 6" sheet.
2. For details at PP117 to PP121, see "Girder at East Transition Details No. 1" and "Girder At Pier E2 No. 9" sheets.
3. All typical girder stiffeners are continuous through floorbeam web except for 8 and 9 at crossbeam, and 1 typically, and unless otherwise specified in the plans.
4. For locations of stiffener types 1 thru 18, see "Girder at East Transition" sheets.
5. Typical details for 3 and 4 shown. For details at suspender location, see "Typical Girder Details No. 6" sheet.

4 REVISED PER ADDENDUM NO. 4 DATED DECEMBER 9, 2005

ALL DIMENSIONS ARE IN MILLIMETERS UNLESS OTHERWISE SHOWN

R. Vallizadeh/V. Toon/Y.L./N.L./F.C.
DESIGN OVERSIGHT
SIGN OFF DATE 07/21/06

	BY	CHECKED
DESIGN	G. Baker	P. Ritchie
DETAILS	S. Camo	T. McMeans
QUANTITIES	G. Baker	M. Roberts

PREPARED FOR THE STATE OF CALIFORNIA DEPARTMENT OF TRANSPORTATION

R. Manzanarez
PROJECT ENGINEER

BRIDGE NO. 34-0006L/R
KILOMETER POST 13.2/13.9

SAN FRANCISCO OAKLAND BAY BRIDGE
EAST SPAN SEISMIC SAFETY PROJECT
SELF-ANCHORED SUSPENSION BRIDGE
(SUPERSTRUCTURE & TOWER)

TYPICAL GIRDER DETAILS NO. 5

Rev. Date: 5-18-98

ORIGINAL SCALE IN MILLIMETERS FOR REDUCED PLANS 0 10 20 30 40 50 60 70 80 90 100

CU 04
EA 0120F1

DISREGARD PRINTS BEARING EARLIER REVISION DATES

REVISION DATES (PRELIMINARY STAGE ONLY) 01/05/06 05/15/06 06/20/06 05/24/06 06/26/06 01/20/06 12/28/06 11/13/06

SHEET 212R1 OF

FILE => p:\bb\04-012001\sas ready august 2005\cco#22\ogdk003a.dgn

100 % PS&E

USERNAME => vignotovs DATE PLOTTED => 11 JUL 2006 TIME PLOTTED => 15:14:54

DIST.	COUNTY	ROUTE	KILOMETER POST TOTAL PROJECT	SHEET NO.	TOTAL SHEETS
04	SF	80	13.2/13.9	651R1	1204

Caltrans Metric

George Baker
REGISTERED ENGINEER - CIVIL

1-27-03
PLANS APPROVAL DATE

REGISTERED PROFESSIONAL ENGINEER George S. Baker No. C57112 Exp. 12/31/07 CIVIL STATE OF CALIFORNIA

The State of California or its officers or agents shall not be responsible for the accuracy or completeness of electronic copies of this plan sheet.

T.Y. LIN / MOFFATT & NICHOL
825 BATTERY STREET
SAN FRANCISCO, CA 94111

To get to the web site, go to http://www.dot.ca.gov

MARK	DATE	DESCRIPTIONS	BY	CH'D
1	07/21/06	DELETE WELD CALLOUT	GB	NV

REVISIONS

CONTRACT CHANGE ORDER NO. 22
SHEET 8 OF 8

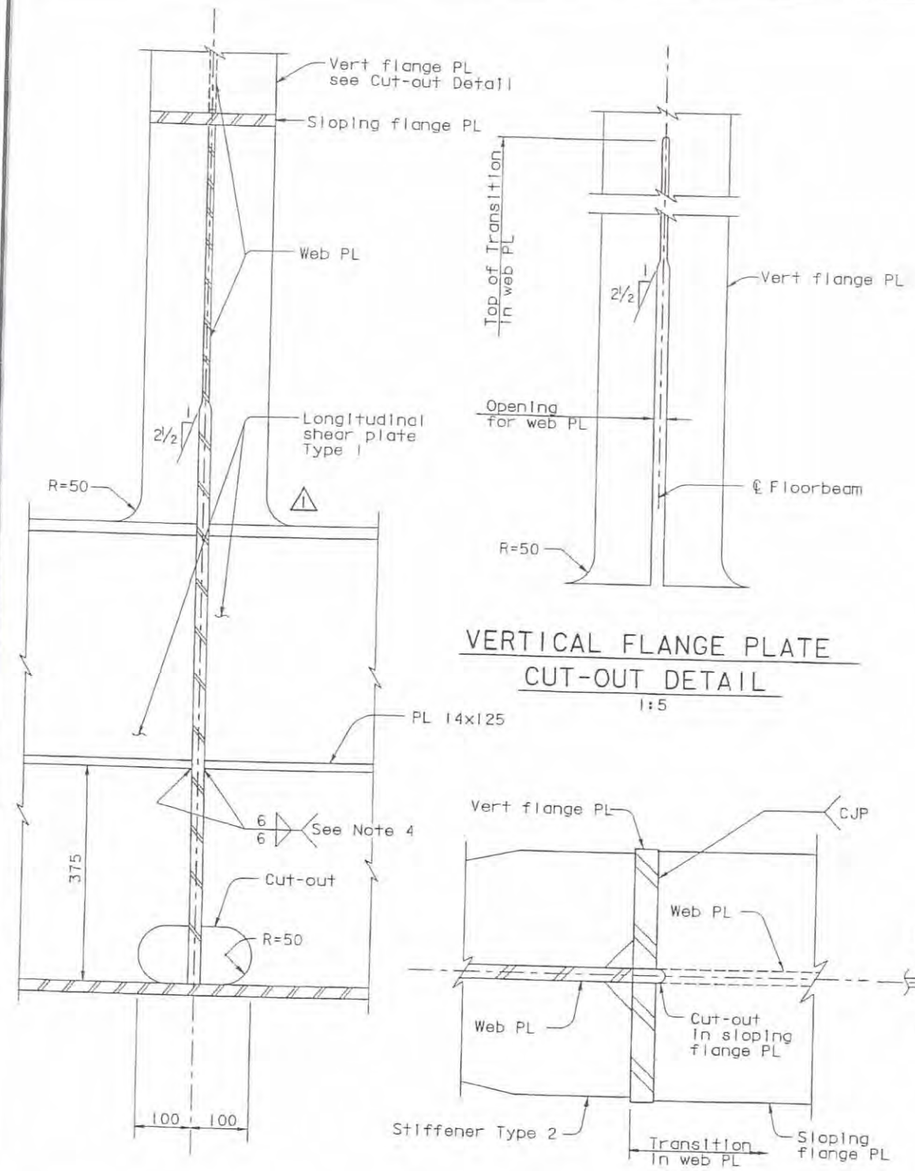

VERTICAL FLANGE PLATE CUT-OUT DETAIL
1:5

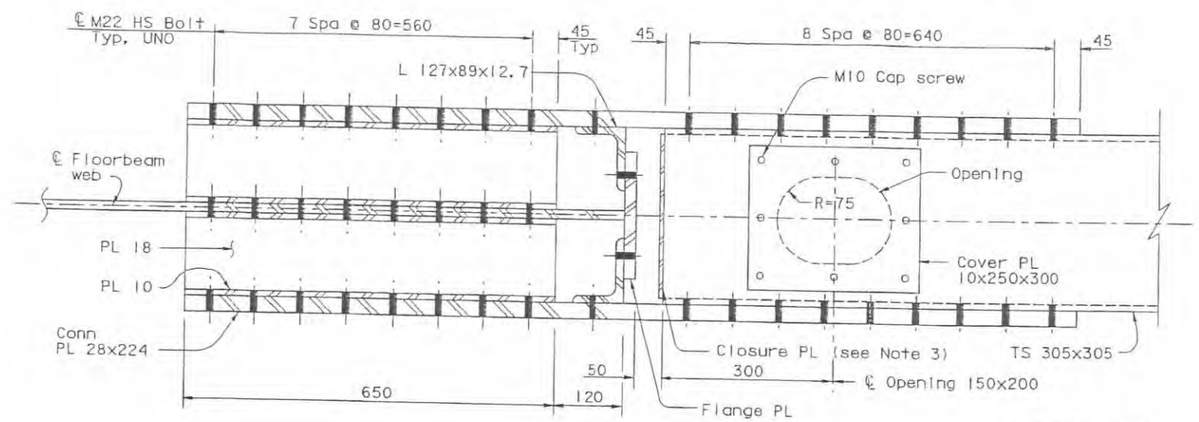

SECTION G-G
1:5

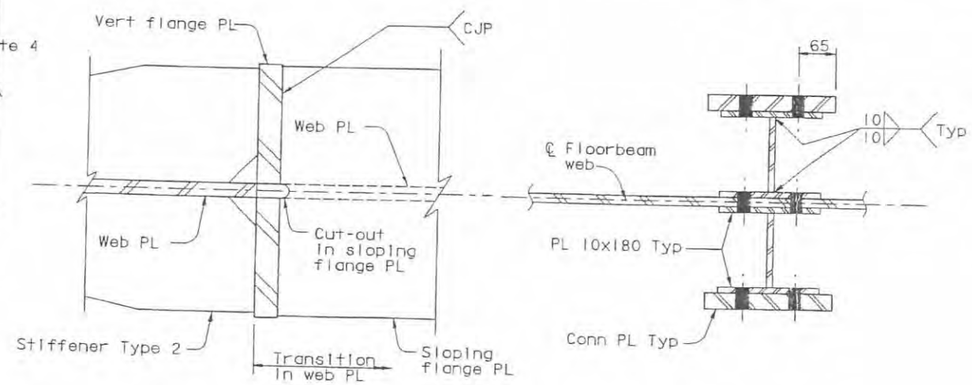

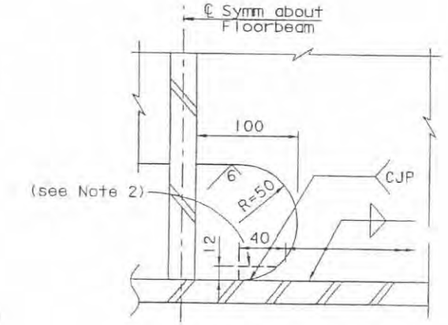

CUTOUT DETAIL
1:2.5

4 SECTION F-F
1:5

SECTION E-E
1:2.5

SECTION H-H
1:5

NOTES:

1. For location of Sections E-E, F-F, G-G and H-H, see Detail D on "Typical Floorbeam Details No.5" sheet.
2. Grind off end of CJP welds. Provide 12 mm trailer with transition to cut-out. See similar Detail A on "Typical Girder Details No.4" sheet. Grind opening to 6 Micron finish in accordance with ANSI B46.1.
3. For closure plate details, see "Typical Floorbeam Details No.7" sheet.
4. Weld shall be CJP in SPCM zone.

4 REVISED PER ADDENDUM NO. 4 DATED DECEMBER 9, 2005

4

ALL DIMENSIONS ARE IN MILLIMETERS UNLESS OTHERWISE SHOWN

R. Valizadeh/V. Toan/Y.L./W.L./F.C.
DESIGN OVERSIGHT
Roger Valizadeh / Vong Toan / Y. Liu
SIGN OFF DATE 07/21/06
Rev. Date: 5-18-88

DESIGN	BY C. Baker	CHECKED	P. Ritchie
DETAILS	BY S. Camo	CHECKED	T. McMeans
QUANTITIES	BY C. Mauch	CHECKED	M. Roberts

PREPARED FOR THE STATE OF CALIFORNIA DEPARTMENT OF TRANSPORTATION

R. Manzanarez
PROJECT ENGINEER

BRIDGE NO. 34-0006L/R
KILOMETER POST 13.2/13.9

SAN FRANCISCO OAKLAND BAY BRIDGE
EAST SPAN SEISMIC SAFETY PROJECT
SELF-ANCHORED SUSPENSION BRIDGE
(SUPERSTRUCTURE & TOWER)

TYPICAL FLOORBEAM DETAILS NO. 6

ORIGINAL SCALE IN MILLIMETERS FOR REDUCED PLANS 0 10 20 30 40 50 60 70 80 90 100

CU 04
EA 0120F1

DISREGARD PRINTS BEARING EARLIER REVISION DATES

REVISION DATES (PRELIMINARY STAGE ONLY) 03/29/00 05/21/01 04/04/02 07/21/02 12/19/02 11/13/05

SHEET 234R1 OF

FILE => p:\bb\04-012001\sas readv august 2005\cco=22\agftb04a.dgn

100 % PS&E

USERNAME => vlgnatovs DATE PLOTTED => 11 JUL 2006 TIME PLOTTED => 15:27:55

STATE OF CALIFORNIA - DEPARTMENT OF TRANSPORTATION

CONTRACT CHANGE ORDER MEMORANDUM

TO: Peter Siegenthaler, Const Mgr / Gary Pursell, P.E., Sup.T.E.	FILE: **E.A.** 04 - 0120F4 **CO-RTE-PM** SF-80-13.2/13.9 **FED. NO.**
FROM: Gary Pursell, P.E., Sup.T.E.	
CCO#: **22** SUPPLEMENT#: **0** Category Code: **CHSA**	CONTINGENCY BALANCE (incl. this change) **$145,369,880.00**
COST: **$61,050.00** INCREASE ☑ DECREASE ☐	HEADQUARTERS APPROVAL REQUIRED? ☑ YES ☐ NO
SUPPLEMENTAL FUNDS PROVIDED: **$0.00**	IS THIS REQUEST IN ACCORDANCE WITH ENVIRONMENTAL DOCUMENTS? ☑ YES ☐ NO
CCO DESCRIPTION: Non Destructive Testing	**PROJECT DESCRIPTION:** CONSTRUCT SELF-ANCHORED SUSPENSION BRIDGE

Original Contract Time:	Time Adj. This Change:	Previously Approved CCO Time Adjustments:	Percentage Time Adjusted: (including this change)	Total # of Unreconciled Deferred Time CCO(s): (including this change)
2490 Day(s)	**0** Day(s)	**30** Day(s)	**1** %	**0**

THIS CHANGE ORDER PROVIDES FOR:

Changes that were prepared for incorporation into the bid documents as Addendum 8. The Toll Bridge Project Oversight Committee directed that Addendum 8 not be issued and that these changes be incorporated into the contract by change order post bid.

This Change Order incorporates changes detailed in the Change Request Numbers 178, 192, 193, 195, and 196, prepared by the consultant designer, T.Y. Lin International - Moffat & Nichol (Joint Venture).

The changes are summarized as follows:

1. Correct an error in the requirements for the working drawings for the cable tie downs.

The submittal now requires a plan for detensioning and replacing wires within a prestressing strand rather than replacing the entire strand. An error on plan sheet 521 of 1204, CABLE TIE DOWN DETAILS NO.2, has also been corrected, eliminating the call out for epoxy coating of the strand.

2. Add two additional locations to the locations requiring fabrication and erection procedures.

Per the original bid document, fabrication and erection procedures are required for all items requiring mock-ups and for specific items listed. The requirement for mock-ups was removed from the tower saddle and Hinge K by an earlier addendum. Eliminating the requirement for Fabrication and Erection Procedures was an unintentional consequence of eliminating the mock-up. This change adds the additional locations to the list of locations requiring fabrication and erection procedures.

3. Changes to weld inspection requirements

This change requires more inspection but is intended to expose defects at an earlier stage of fabrication and thereby simplify repairs. The new non-destructive inspection method itself, Magnetic Particle, is less dependent on interpretation of the inspector and will alleviate disagreements between the fabricator and the Departments Quality Assurance personnel on site. The overall benefit should provide for early and expeditious repairs to weld deficiencies and prevent disputes over the status of fabricated items and the resultant delays to the overall shop production schedule. The benefit to the contractor is extremely difficult to determine as it depends on what types of repairs would be required to what components of the overall fabrication and how this could affect the efficiency of the shop.

Payment for the Extra Work will be a Lump Sum of $61,050.00, which can be financed from the contingency fund. A detailed cost analysis is on file.

No time adjustment is warranted, as this change order does not affect the controlling operation. Design concurrence has been acquired for this change order. Maintenance concurrence is not required. Most of the changes are constructability issues and the changes in the plans are minor clarifications.

This Change Order received Headquarters Issue and Approve on 12/27/06.

ADA Notice: For individuals with sensory disabilities, this document is available in alternate formats. For information call: (916) 654-6410 or TDD (916) 654-3880 or write Records and Forms Management, 1120 N Street, MS-89, Sacramento, CA 95814.

CONCURRED BY:			
Construction Engineer:	Gary Pursell, Resident Engineer	Date	8/7/06
Bridge Engineer:	Rock Morrow, Struct Rep	Date	8/2/06
Project Engineer:	Mike Forner, Principal Const Eng	Date	8/8/06
Project Manager:		Date	
FHWA Rep.:		Date	
Environmental:		Date	
Other (specify):	Rob Kobal, Const Coordinator	Date	8/7/06
Other (specify):	M.Whiteside & R.Valizadeh (P.Eng	Date	4/28/06
District Prior Approval By:		Date	
HQ (Issue Approve) By:	Ken Darby	Date	12/27/06
Resident Engineer's Signature: Gary Pursell 2/9/07		Date	

ESTIMATE OF COST

	THIS REQUEST	TOTAL TO DATE
ITEMS	$0.00	$0.00
FORCE ACCOUNT	$0.00	$0.00
AGREED PRICE	$61,050.00	$61,050.00
ADJUSTMENT	$0.00	$0.00
TOTAL	$61,050.00	$61,050.00

FEDERAL PARTICIPATION

☐ PARTICIPATING ☐ PARTICIPATING IN PART ☑ NONE
☐ NON-PARTICIPATING (MAINTENANCE) ☐ NON-PARTICIPATING

FEDERAL SEGREGATION (if more than one Funding Source or P.I.P. type)
☑ CCO FUNDED PER CONTRACT ☐ CCO FUNDED AS FOLLOWS

FEDERAL FUNDING SOURCE	PERCENT

ADA Notice: For individuals with sensory disabilities, this document is available in alternate formats. For information call: (916) 654-6410 or TDD (916) 654-3880 or write Records and Forms Management, 1120 N Street, MS-89, Sacramento, CA 95814.

CONTRACT CHANGE ORDER

Change Requested by: Engineer

CCO: 23	Suppl. No. 0	Contract No. 04 - 0120F4	Road SF-80-13.2/13.9	FED. AID LOC.:

To: **AMERICAN BRIDGE/FLUOR ENTERPRISES INC A JOINT VENT**

You are directed to make the following changes from the plans and specifications or do the following described work not included in the plans and specifications for this contract. ***NOTE: This change order is not effective until approved by the Engineer.***

Description of work to be done, estimate of quantities and prices to be paid. (Segregate between additional work at contract price, agreed price and force account.) Unless otherwise stated, rates for rental of equipment cover only such time as equipment is actually used and no allowance will be made for idle time. This last percentage shown is the net accumulated increase or decrease from the original quantity in the Engineer's Estimate.

Adjustment of Compensation at Lump Sum:

Modify concrete details and embedded items (reinforcing steel, post-tensioning, drain pipes, etc.) at the W-2 Cap Beam & E-2 Cross Beam as shown on sheets 2 through 102 of this change order.

The following revised and supplemental plan sheets detail the changes addressed in this change order:

Revised Contract Plan Sheets: 432R2, 437R2, 450R1, 451R1, 455R1, 456R1, 457R1, 458R1, 459R1, 460R1, 461R1, 462R1, 463R1, 464R1, 465R1, 466R1, 467R1, 468R1, 469R1, 470R1, 471R1, 472R1, 473R1, 474R1, 475R1, 476R1, 477R1, 478R1, 479R1, 480R1, 481R1, 482R1, 483R1, 484R1, 485R1, 486R1, 487R1, 488R1, 489R1, 490R1, 491R1, 492R1, 493R1, 494R1, 495R1, 496R1, 497R1, 498R1, 499R1, 500R1, 501R1, 502R1, 503R1, 504R1, 505R1, 506R1, 507R1, 508R1, 509R1, 511R1, 512R1, 513R1, 514R1, 515R1, 516R1, 517R1, 519R1, 520R1, 522R1, 773R1, 905R1, 962R1 and 981R2 (of 1204).

Added Supplemental Contract Plan Sheets: 497S1, 497S2, 497S3, 497S4, 497S5, 497S6, 497S7, 497S8, 497S9, 497S10, 497S11, 497S12, 497S13, 497S14, 497S15, 497S16, 497S17, 497S18, 497S19, 497S20, 497S21, 497S22, 497S23, 497S24, 497S25, 497S26, 497S27 and 497S28 (of 1204).

For this work the Contractor shall receive the sum of $183,476.00. This sum constitutes full and complete compensation for furnishing all labor, material, tools and incidentals including all markups by reason of this Change.

There is no adjustment of contract time for this change.

Estimated cost of Adjustment of Compensation at Lump Sum $183,476.00

Estimated Cost: Increase ☑ Decrease ☐ **$183,476.00**

By reason of this order the time of completion will be adjusted as follows: 0 days

Submitted by

Signature	Resident Engineer Gilel Klebanov for Gary Pursell, R.E.	Date 12/3/2007

Approval Recommended by

Signature	Supervising Bridge Engineer Richard Morrow, P.E., Sup. BE	Date 12/5/07

Engineer Approval by

Signature	Supervising Transportation Engineer Gary Pursell, P.E., Sup. TE	Date 12/21/07

We the undersigned contractor, have given careful consideration to the change proposed and agree, if this proposal is approved, that we will provide all equipment, furnish the materials, except as may otherwise be noted above, and perform all services necessary for the work above specified, and will accept as full payment therefor the prices shown above.

NOTE: If you, the contractor, do not sign acceptance of this order, your attention is directed to the requirements of the specifications as to proceeding with the ordered work and filing a written protest within the time therein specified.

Contractor Acceptance by

Signature	(Print name and title) Michael D. Flowers Project Director	Date 21DEC07

STATE OF CALIFORNIA - DEPARTMENT OF TRANSPORTATION

CONTRACT CHANGE ORDER MEMORANDUM

TO: Pete Siegenthaler, Prin. TE / Gary Pursell, P.E., Sup T.E.	FILE: **E.A.** 04 - 0120F4
FROM: Gary Pursell, P.E., Sup.T.E.	**CO-RTE-PM** SF-80-13.2/13.9
	FED. NO.
CCO#: **23** SUPPLEMENT#: **0** Category Code: **CHPT**	CONTINGENCY BALANCE (incl. this change) **$140,601,898.24**
COST: **$183,476.00** INCREASE ☑ DECREASE ☐	HEADQUARTERS APPROVAL REQUIRED? ☐ YES ☑ NO
SUPPLEMENTAL FUNDS PROVIDED: **$0.00**	IS THIS REQUEST IN ACCORDANCE WITH ENVIRONMENTAL DOCUMENTS? ☑ YES ☐ NO
CCO DESCRIPTION: Revise W2 Cross & E2 Cap Beams	**PROJECT DESCRIPTION:** CONSTRUCT SELF-ANCHORED SUSPENSION BRIDGE

Original Contract Time:	Time Adj. This Change:	Previously Approved CCO Time Adjustments:	Percentage Time Adjusted: (including this change)	Total # of Unreconciled Deferred Time CCO(s): (including this change)
2490 Day(s)	**0** Day(s)	**30** Day(s)	**1** %	**0**

THIS CHANGE ORDER PROVIDES FOR:

Modifying concrete details and embedded items (reinforcing steel, post-tensioning, drain pipes, etc.) at the W-2 Cap Beam & E-2 Cross Beam per revised and supplemental contract plan sheets.

Contract Change Order (CCO) plan sheets specifying the work at the W-2 Cap were issued to the Contractor, in contrasting colors to denote the rearrangement of thousands of reinforcing steel bars and to differentiate them from each other, the hundreds of horizontal (transverse & continuity) bars, and vertical post-tensioning tendon bars. Various components shall be individually named, alphanumerically, to further assist in differentiating the components.

The CCO work, at W-2, affects the weight of reinforcing steel to be placed. For example, non-contact lap splices are now permitted for certain bar types and configurations. Also, certain Post-Tension (P-T) bars and tendons have been slightly reduced in length. Various concrete forming details implemented primarily at the P-T block outs and at the jacking saddle frame location need to be modified. Drainage conduits at the tie down cable access chambers shall be rerouted to accommodate the modified bar and tendon.

This CCO also affects the weight of reinforcing steel to be placed at E-2. The additional shear keys (Addendum No. 5) atop this cross beam requires the addition of supporting rebar beneath them in what once had been void space by design. The net impact of the added shear keys also increases P-T tendon sizing. Allowance between existing main column (vertical) and hoop rebar will also be revised.

These changes had been prepared initially for incorporation into bid documents via Proposed Addendum No. 8. The Toll Bridge Project Oversight Committee directed on January 01, 2006, that Addendum No. 8 not be issued and that these changes be incorporated into the contract via change order. This CCO addresses the designer's Change Request Nos. 22 and 171.

W2 Cap Beam and cross beams, reinforcement and other embedments, were modeled in 3-D (AutoCAD) to generate Integrated Shop Drawing (ISD) models not required per the Special Provisions. These models have been analyzed with "clash-detection" software (NavisWorks) which identified interferences with the reinforcement / embed conflicts. These conflicts will be resolved by adjusting the location, sizing, number, etc. of the bar.

Executed Addendum No. 5 reduced the size and increased the number of shear keys. The intent was to allow smaller casting fabricators' to bid on the SAS contract, thereby promoting competition. Cross Beam supporting reinforced concrete design and related plan sheet details were not finalized in Addendum No. 5 and were to be inserted into Addendum No. 8. This CCO corrects conflicts that were intended to be addressed in Addendum No. 8.

This change modifies the plan sheets. There are no changes to the Special Provisions.

The Contractor will perform this work at Adjustment of Compensation at Lump Sum Price for the sum of $183,476.00, which can be financed from the contingency fund. A detailed cost analysis is on file.

ADA Notice: For individuals with sensory disabilities, this document is available in alternate formats. For information call: (916) 654-6410 or TDD (916) 654-3880 or write Records and Forms Management, 1120 N Street, MS-89, Sacramento, CA 95814.

No adjustment of contract time is warranted, as this change does not affect the controlling operation.

This change order has received concurrence from CT Oversight (Mike Whiteside and Reza Valizadeh), Structure Rep (Rick Morrow), Principal Bridge Engineer (Pete Siegenthaler), HQ Construction Coordinator (Rob Kobal), Resident Engineer (Gary Pursell), the Designer of Record (Marwan Nader) and Structure Maintenance (Bill Zanetich) for this change.

This change order also received an Issue and Approve from the Division of Construction on June 1, 2007 for $453,297.66. Through further review with the Contractor, the final price was reduced to $183,476.00. A copy is attached for your reference.

CONCURRED BY:

Construction Engineer:	Res. Eng., Gary Pursell, Sup. TE	Date	2/22/07
Bridge Engineer:	Struct Rep, Rick Morrow, Sup TE	Date	2/15/07
Project Engineer:	CT Oversight, Reza Valizadeh, P.E	Date	3/14/07
Project Manager:	PCE, Pete Siegenthaler, Prin TE	Date	2/23/07
FHWA Rep.:		Date	
Environmental:	Design of Record, Marwan Nader,	Date	12/21/05
Other (specify):	HQ, Rob Kobal	Date	2/23/07
Other (specify):	CT Oversight, Michael Whiteside,	Date	12/21/05
District Prior Approval By:		Date	
HQ (Issue Approve) By:	HQ, Ken Darby	Date	6/1/07
Resident Engineer's Signature:	Gary Pursell 12/21/07	Date	

ESTIMATE OF COST

	THIS REQUEST	TOTAL TO DATE
ITEMS	$0.00	$0.00
FORCE ACCOUNT	$0.00	$0.00
AGREED PRICE	$0.00	$0.00
ADJUSTMENT	$183,476.00	$183,476.00
TOTAL	$183,476.00	$183,476.00

FEDERAL PARTICIPATION

☐ PARTICIPATING ☐ PARTICIPATING IN PART ☑ NONE
☑ NON-PARTICIPATING (MAINTENANCE) ☐ NON-PARTICIPATING

FEDERAL SEGREGATION (if more than one Funding Source or P.I.P. type)
☑ CCO FUNDED PER CONTRACT ☐ CCO FUNDED AS FOLLOWS

FEDERAL FUNDING SOURCE	PERCENT

ADA Notice: For individuals with sensory disabilities, this document is available in alternate formats. For information call: (916) 654-6410 or TDD (916) 654-3880 or write Records and Forms Management, 1120 N Street, MS-89, Sacramento, CA 95814.

CONTRACT CHANGE ORDER

Change Requested by: Engineer

CCO: 24 **Suppl. No. 0** **Contract No. 04 – 0120F4** **Road** SF-80-13.2/13.9 **FED. AID LOC.:**

To: **AMERICAN BRIDGE/FLUOR ENTERPRISES INC A JOINT VENTURE**

You are directed to make the following changes from the plans and specifications or do the following described work not included in the plans and specifications for this contract. ***NOTE: This change order is not effective until approved by the Engineer.***

Description of work to be done, estimate of quantities and prices to be paid. (Segregate between additional work at contract price, agreed price and force account.) Unless otherwise stated, rates for rental of equipment cover only such time as equipment is actually used and no allowance will be made for idle time. This last percentage shown is the net accumulated increase or decrease from the original quantity in the Engineer's Estimate.

Modify traveler rails and hardware as shown on sheets three (3) through seventy (70) of this change order. This change includes, but is not limited to, the following:

- Change the traveler rail from an "S" shape beam to a built-up beam
- Modify the bikepath traveler rail connections
- Modify the crossbeam traveler rails
- Remove existing traveler rail, then furnish and install new traveler rail on the Skyway transition section.
- Advance procurement of elements of the traveler scaffold test frame as directed by the Engineer
- Conduct soil testing to determine soil bearing values for the traveler testing frame as directed by the Engineer
- Provide compensation for the escalated cost of the traveler scaffold suspension system components

The following revised contract plan and supplemental sheets detail all changes:

0663R2, 0951R3, 0952R3, 0956R3, 0956S1R1, 1009R2, 1010R2, 1011R3, 1012R2, 1013R3, 1014R2, 1015R2, 1016R2, 1017R2, 1018R3, 1019R2, 1020R2, 1021R2, 1022R2, 1023R2, 1024R2, 1025R2, 1026R2, 1027R3, 1028R3, 1029R3, 1030R2, 1031R2, 1032R2, 1033R2, 1034R2, 1035R3. 1036R3, 1037R3, 1037S1R1, 1037S2R1, 1037S3R1, 0137S4R1, 1037S5R1, 1037S6R1, 1037S7R1, 1037S8R1, 1037S9R1, 1120R3, 1121R3, 1122R4, 1122S1R1, 1122S2, 1122S3, 1123R3, 1124R3, 1125R4, 1125S1, 1126R3, 1127R3, 1128R4, 1129R3, 1130R4, 1131R3, 1132R3, 1133R4, 1133S1R3, 1153R3, 1154R3, 1155R3, 1156R2 and 1158R2 (of 1204).

This change order resolves Contractor Request for Information (RFI) Nos. 220R0, 630R0, 898R0/R1, 946R1, 1053R1, 1392R0, 1515R0, 1536R0, 1617R0, 1707R0, 1835R0, TVC-RFI-0146R0, TVC-RFC-0146R1, TVC-RFI-0146R2, TVC-RFI-0146R3, TVC-RFI-0239R0, TVC-RFI-0239R1, TVC-RFI-0242R0, TVC-RFI-0593R0, TVC-RFI-0593R2, and TVC-RFI-0656R0.

For the purpose of making partial payments pursuant to Section 5-1.25, "Payments" of the Special Provisions, components for the traveler scaffold suspension system that are furnished by Elect Air and are furnished to the traveler fabricator shall be considered materials furnished but not incorporated into the work.

Estimate of Decrease in Contract Item at Contract Price:

ITEM 1

The change in the traveler support rail from an "S" beam to a built-up beam and other changes as shown on the attached plan sheets result in a change in weight of Contract Item #101. This is a decrease in contract item at contract unit price.

Item No. 101: TRAVELER SUPPORT RAIL
-69,668 KG (-17.48%) at $7.00 / KG = <$487,676.00> (-17.48%)

The quantity shown herein for Item #101, TRAVELER SUPPORT RAIL, when combined with the quantities specified in the Engineer's Estimate, and as modified by any previous change orders, shall be the final quantity for which payment will be made.

Total Decrease in Contract Item at Contract Unit Price ..... <$487,676.00>

Adjustment of Compensation at Lump Sum Price:

ITEM 2

For the change in character of work for changing the rail from an "S" beam to a built-up beam, additional handling, installation, galvanization, brackets, bolts and other miscellaneous items, the Contractor agrees to accept a lump sum price of $545,190.60. This sum constitutes full compensation, including all markups, for this change.

For revising the crossbeam traveler rail and support brackets after the initial approval of shop drawings, and to modify the support brackets at panel point 8.5, the Contractor agrees to accept a lump sum of $505,000.00, per ABF letter ABF-CAL-LTR-001248, dated September 28, 2009. This sum includes compensation for, markups, detailing costs, fabrication, and salvage value of material not incorporated into the work relative to this change.

Adjustment of Compensation at Agreed Lump Sum Price $1,050,190.60

Extra Work at Lump Sum Price:

ITEM 3

To furnish traveler support rail along the Skyway transition section, the Contractor agrees to accept a lump sum price of $170,485.40. This sum constitutes full compensation, including all markups, for this change.

Cost of Extra Work at Agreed Lump Sum Price $170,485.40

Adjustment of Compensation at Lump Sum Price:

ITEM 4.

The items identified above in this change order have been paid as part of CCO 108 resolution. Therefore, the amount due under this change order will be adjusted by the amount paid under CCO 108 to prevent a double payment. Total amount paid under CCO 108, and to be credited to this change, is $733,000.00.

Adjustment of Compensation at Agreed Lump Sum Price..... <$733,000.00>

Adjustment of Compensation at Lump Sum Price:

ITEM 5

To compensate the Contractor for escalated cost of the traveler scaffold suspension system components furnished by Elect Air, the Contractor agrees to accept a lump sum price of $582,557.11 This sum constitutes full compensation, including all markups, for this change.

Adjustment of Compensation at Agreed Lump Sum Price..... $582,557.11

Extra Work at Force Account:

ITEM 6

Perform the following, but not limited to, as directed by the Engineer:

1. For changes identified on contract plan sheets 0951R3, 0952R3, 1013R3, 1122R4, 1122S2, 1122S3, 1125R4, 1125S1, 1128R4, 1130R4, 1133R4, and 1133S1R3 (of 1204) issued after the agreement of CCO 108.
2. Remove existing traveler support rail on the Skyway transition section and install built-up traveler support rail.
3. Adjust clearance and straightness of crossbeams traveler rails at PP14-28 and PP125-128 as required.
4. Furnish materials for the traveler-testing frame.
5. Conduct soil testing to determine soil-bearing values for the traveler-testing frame.

Labor, equipment and material authorized by the Engineer, as necessary, will be paid in accordance with the provisions of Section 4-1.03D, "Extra Work" of the Standard Specifications and Section 5-1.24, "Force Account Payment" of the Special Provisions.

Estimated Cost of Extra Work at Force Account..... $950,000.00

CHANGE ORDER COST AND TIME SUMMARY

ITEM 1. Estimate of Decrease in Contract Item at Contract Price.....	<$487,676.00>
ITEM 2. Adjustment of Compensation at Lump Sum Price.....	$1,050,190.60
ITEM 3. Extra Work at Lump Sum Price	$170,485.40
Sub-total (ITEM 1 thru 3), net value of this change up to 11-17-09.....	$733,000.00
ITEM 4. Amount paid under CCO 108 for this change order.....	<$733,000.00>
ITEM 5. Adjustment of Compensation at Lump Sum Price	$582,557.11
ITEM 6. Extra Work at Force Account	$950,000.00
Total net pay for this change order.....	$1,532,557.11

Contract time is addressed in CCO 108 for all work identified in this change order. Therefore contract time will not be adjusted in this change order.

Estimated Cost: Increase ☒ Decrease ☐ $1,532,557.11

By reason of this order the time of completion will be adjusted as follows: 0

Submitted by
Signature Kannu Balan **Resident Engineer** Kannu Balan, Senior TE **Date** 6-10-10

Approval Recommended by
Signature Gary Pursell **Supervising Transportation Engineer** Gary Pursell, SupTE **Date** 6/10/10

Engineer Approval by
Signature Pete Siegenthaler **Principal Transportation Engineer** Peter Siegenthaler, PrinTE **Date** 7/12/10

We the undersigned contractor, have given careful consideration to the change proposed and agree, if this proposal is approved, that we will provide all equipment, furnish the materials, except as otherwise be noted above, and perform all services necessary for the work above specified, and will accept as full payment therefor the prices shown above.

NOTE: If you, the contractor, do not sign acceptance of this order, your attention is directed to the requirements of the specifications as to proceeding with the ordered work and filing a written protest within the time therein specified.

Contractor Acceptance by
Signature (Print name and title) Michael D. Flowers, Project Director **Date** 7-7-10

STATE OF CALIFORNIA - DEPARTMENT OF TRANSPORTATION

CONTRACT CHANGE ORDER MEMORANDUM

DC-CEM-4903 (OLD HC-39 REV. 6/93) CT# 7541-3544-0

DATE: 10/06/2009

TO Pete Siegenthaler, Principal TE	FILE 04-0120F4 04-SF-80-13.2/13.9
FROM Gary Pursell, STE / Richard Morrow, SBE	
CCO NO. 24 / SUPPLEMENT NO. 0 / CATEGORY CODE CHPK	CONTINGENCY BALANCE (including this change) **$ 111,459,931.40**
$1,532,557.11 INCREASE ☒ DECREASE ☐	HEADQUARTERS APPROVAL REQUIRED? YES ☒ NO ☐
SUPPLEMENTAL FUNDS PROVIDED **$ 0.00**	IS THIS REQUEST IN ACCORDANCE WITH ENVIRONMENTAL DOCUMENTS? YES ☒ NO ☐
CCO DESCRIPTION: Traveler Rail Modifications	**PROJECT DESCRIPTION** CONSTRUCT SELF-ANCHORED SUSPENSION BRIDGE

Original Contract Time	Time Adj.: This Change	Previously Approved CCO Time Adjustments	Percentage Time Adjusted: (including this change)	Total # of Unreconciled Deferred Time CCO(s): (including this change)
2490 Day(s)	**0** Day(s)	**227** Day(s)	**9** %	**6**

THIS CHANGE ORDER PROVIDES FOR:

Substituting the maintenance traveler support rails, from the "S"-beam shape shown on the as-bid contract plans, to a welded built up beam shape. Sixty-seven (67) contract plan sheets are revised to reflect this change and associated dimensional revisions on the SAS and the steel transition span constructed as part of the Skyway portion of the San Francisco-Oakland Bay Bridge (SFOBB).

This change was prepared and proposed for incorporation into the contract bid documents as part of Addendum No. 8 on 01-31-06 and was intended to supplement changes made by Addendum No. 6 which had already been incorporated into the bid documents. The Toll Bridge Project Oversight Committee (TBPOC) subsequently directed that Addendum No. 8 not be issued and that these (and other) changes instead be incorporated into the Contract by change order after Contract Award. This change order incorporates details proposed in the subsequent Design Change Request ("CR") 13.

Anti-skew devices and dynamic brake systems are required to be added to the maintenance travelers to mitigate operational and safety concerns, pursuant to lessons learned on other Toll Bridge contracts. These systems require a change from the "S"-rail to the built up section rail to provide flat flanges on both sides of the rail web, which is not provided by the sloping single flange of "S"-rail detailed in the as-bid plans. Originally, the change request proposed a "W" section rail to replace the "S" rail, however it was determined that such a section in the size needed was not available at the Contractor's fabrication site and it would be more cost effective to use a built up section.

A portion of the traveler rail extends to the Skyway portion of the SFOBB completed on contract 04-012024. Since the original change request, it was determined that the original railing used on the Skyway was not compatible and additional built-up section rail and brackets would have to be procured and the original railing would have to be removed.

Authorization to proceed on procurement and fabrication of the traveler rails was given to the Contractor due to the long fabrication lead-time. The Contractor submitted and the Department approved shop drawings for the rails. Subsequently it was discovered that the Department approved certain details in error, but fabrication had already begun. Some of the contract plan details included in this change order were modified to mitigate the rework costs for materials already fabricated. This change order includes compensation for the Department's share of the rework costs, which was not part of the original scope.

CCO 108 compensated the Contractor for a number of outstanding issues, including a portion of the above-discussed changes; therefore a corresponding credit is taken on this change order. Subsequent to this negotiation, further small adjustments to the details of the rail mounting and the cross beam rail alignment were identified and added to this change order.

In addition, this change order also compensates the Contractor for delays in procurement of sole source materials for the traveler suspension system and advance procurement of necessary materials and preliminary work for testing and evaluation of the travelers.

CCO 24 Supplement 1 will be issued to include changes to the remaining traveler components, including trolleys, brake systems, anti-skew devices, traveler structural changes, and paint and epoxy coatings.

Total cost of this change order is estimated at $1,532,557.11. All work associated with this change order can be financed from the contingency fund. A detailed cost estimate is on file.

A determination of the delay in completion of the contract due to work specified by this change order, has been made in CCO 108S1 and is part of the Claims Settlement Report (CSR) No. 1 for this project. Therefore, no adjustment of time is warranted by reason of this change order.

This change order received concurrences from Gary Pursell (Resident Engineer), Rick Morrow (Structure Rep.), Robert Kobal (HQ Liason), Mike Forner for Peter Siegenthaler (Principal Engineer), Michael Gulli (Maintenance), Design of Record, Marwan Nader, P.E. and Ken Terpstra (Project Manager).

This change order will be presented to TBPOC on July 3, 2010 meeting for approval.

CONCURRED BY:	
CONSTRUCTION ENGINEER Res. Eng. Gary Pursell, Sup. TE	DATE 8/11/06
SR. BRIDGE ENGINEER Rick Morrow, Sup. BE	DATE 8/02/06
FHWA REPRESENTATIVE	DATE
PROJECT MANAGER Proj. Manager, Ken Terpstra	DATE 11/10/09
OTHER (SPECIFY) HQ, Robert Kobal	DATE 8/16/06
Design of Record, Marwan Nader	1/31/06
Maintenance, Michael Gulli	6/28/07
PCE, Mike Forner for Peter Siegenthaler, Prin TE	DATE 8/16/06
DISTRICT PRIOR APPROVAL BY	DATE
HQ (ISSUE & APPROVE) (TO PROCEED) BY	DATE
RESIDENT ENGINEER SIGNATURE Gary Pursell	DATE 6/10/10

ESTIMATE OF COST

	THIS REQUEST	TOTAL TO DATE
ITEMS	($487,676.00)	($487,676.00)
FORCE ACCOUNT	$950,000.00	$950,000.00
AGREED PRICE	$170,485.40	$170,485.40
ADJUSTMENT	$899,747.71	$899,747.71
TOTAL	$1,532,557.11	$1,532,557.11

FEDERAL PARTICIPATION

☐ PARTICIPATING ☐ PARTICIPATING IN PART ☒ NONE
☐ NON-PARTICIPATING (MAINTENANCE) ☐ NON-PARTICIPATING

FEDERAL SEGREGATION (IF MORE THAN ONE FUNDING SOURCE OR P.I.P. TYPE)
☐ CCO FUNDED PER CONTRACT ☐ CCO FUNDED AS FOLLOWS

FEDERAL FUNDING SOURCE	PERCENT

DIST.	COUNTY	ROUTE	KILOMETER POST TOTAL PROJECT	SHEET NO.	TOTAL SHEETS
04	SF	80	13.2/13.9	663R2	1204

George Baker
REGISTERED ENGINEER - CIVIL
12-6-04
PLANS APPROVAL DATE

REGISTERED PROFESSIONAL ENGINEER George S. Baker No. C57112 Exp. 12/31/05 CIVIL STATE OF CALIFORNIA

The State of California or its officers or agents shall not be responsible for the accuracy or completeness of electronic copies of this plan sheet.

T.Y. LIN / MOFFATT & NICHOL
825 BATTERY STREET
SAN FRANCISCO, CA 94111

Caltrans now has a web site! To get to the web site, go to: http://www.dot.ca.gov

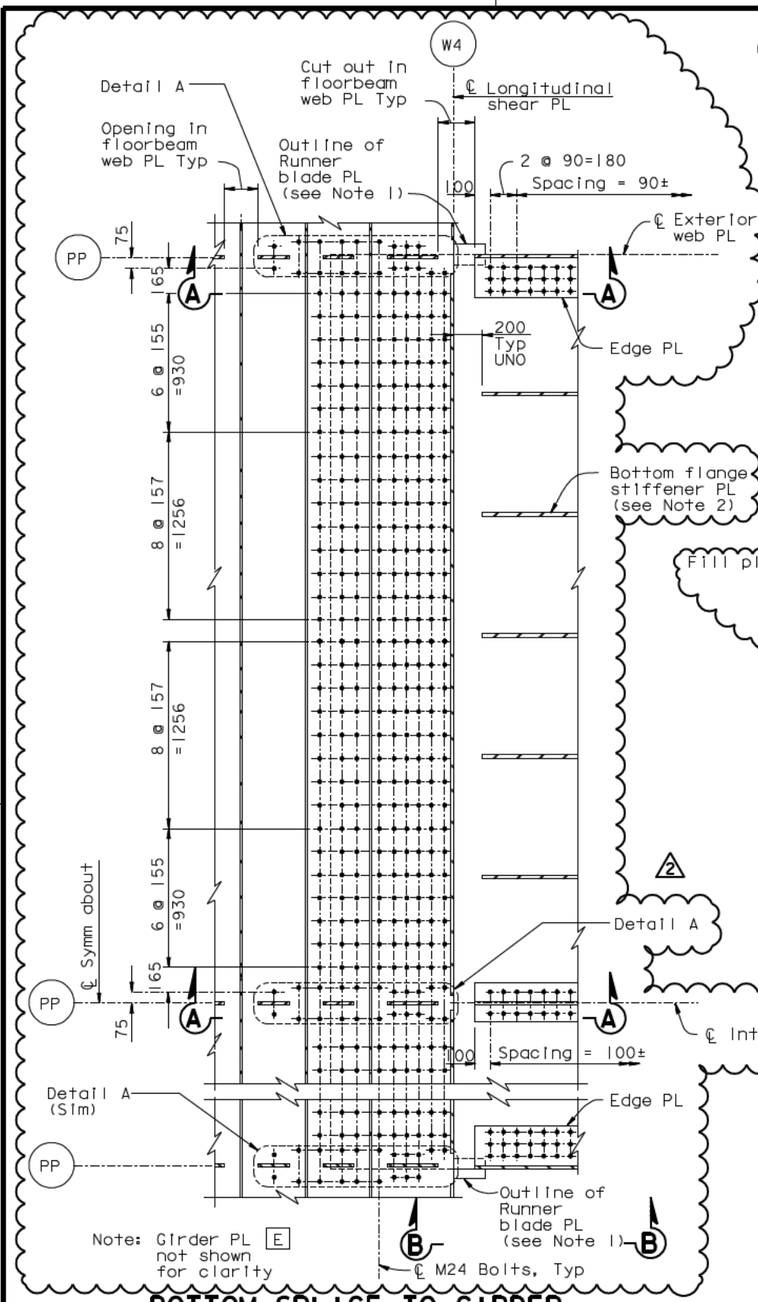

BOTTOM SPLICE TO GIRDER

DETAIL G

1:20

CONTRACT CHANGE ORDER NO. ____
SHEET ___ OF ___

REQUESTS FOR INFORMATION NOT ADDRESSED IN THIS CCO REMAIN IN FORCE

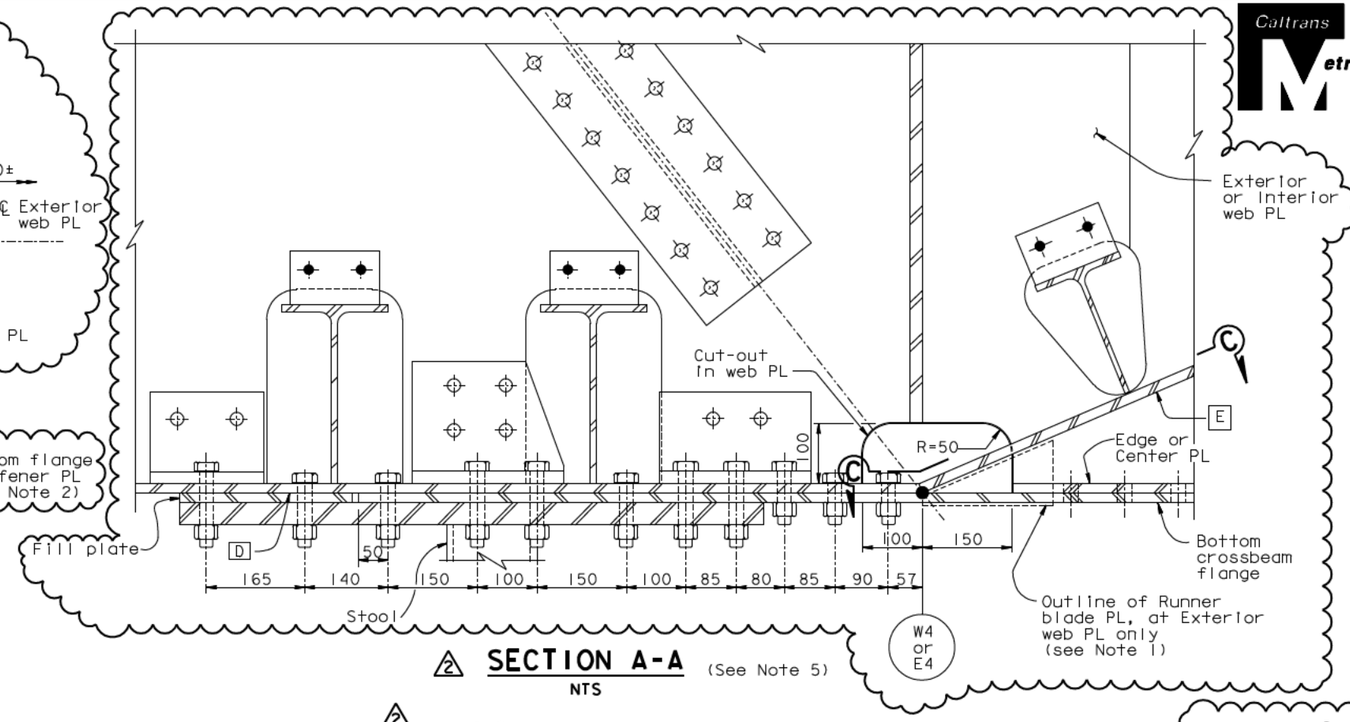

SECTION A-A

NTS (See Note 5)

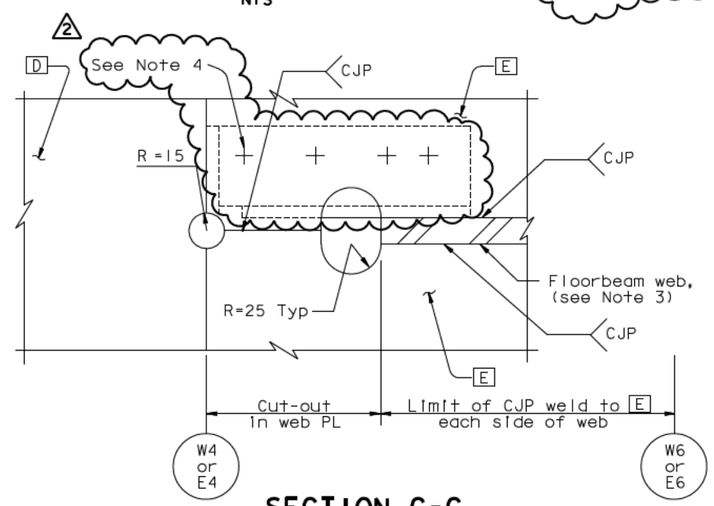

SECTION C-C

NTS

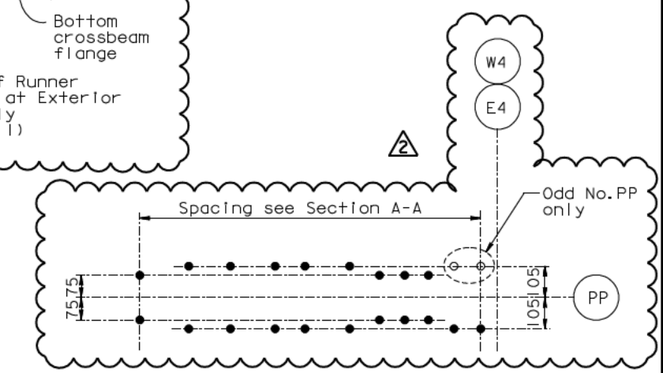

DETAIL A

NTS

NOTES:

1. For Section B-B and details of runner blade plates, see "Typical Crossbeam Details No. 10" sheet.
2. For stiffener termination detail, see "Typical Crossbeam Details No. 6" sheet.
3. Floorbeam webs are continuous through girder faces E and F at each crossbeam and are spliced to interior or exterior crossbeam webs. At each face of floorbeam webs the E and F plates are joined by CJP welds.
4. For bolt spacing see "Typical Crossbeam Details No. 10" sheet.
5. For traveler rail connection details not shown, see "Traveler Rail Details" sheets.

Daniel J. Turner
REGISTERED PROFESSIONAL ENGINEER Daniel J. Turner No. C 65033 Exp. 06/30/09 CIVIL STATE OF CALIFORNIA

FOR REVISIONS ONLY

ALL DIMENSIONS ARE IN MILLIMETERS UNLESS OTHERWISE SHOWN

MARK	DATE	DESCRIPTIONS	BY	CH'D	CCO#
2	05/18/09	TRAVELER RAIL MODIFICATIONS	DT	GB	2450
1	05/01/09	M24 OBG CROSSBEAM DETAIL	GB	DT	117

REVISIONS

R. Vallizadeh/V. Toan/Y.L./W.L./F.C.
DESIGN OVERSIGHT
Ryan Vallizadeh / Vong Toan / Y. Liu
SIGN OFF DATE 05/18/09

	BY	CHECKED	
DESIGN	G. Baker	P. Ritchie	
DETAILS	M. Gulyas	T. McMeans	
QUANTITIES	G. Baker	M. Roberts	

PREPARED FOR THE STATE OF CALIFORNIA DEPARTMENT OF TRANSPORTATION

R. Manzanarez
PROJECT ENGINEER

BRIDGE NO. 34-0006L/R
KILOMETER POST 13.2/13.9

SAN FRANCISCO OAKLAND BAY BRIDGE
EAST SPAN SEISMIC SAFETY PROJECT
SELF-ANCHORED SUSPENSION BRIDGE
(SUPERSTRUCTURE & TOWER)

TYPICAL CROSSBEAM DETAILS NO. 9

Rev. Date: 5-18-98

ORIGINAL SCALE IN MILLIMETERS FOR REDUCED PLANS 0 10 20 30 40 50 60 70 80 90 100

CU 04
EA 0120F1

DISREGARD PRINTS BEARING EARLIER REVISION DATES

REVISION DATES (PRELIMINARY STAGE ONLY) 08/02/99 05/31/01 04/08/02 07/01/02 12/19/02

SHEET 246R2 OF

FILE -> L:\BB\04-012001\SAS\Contract Plans and CCO\CCO\CCO#2450\2-Revision 05-18-09\DGN\agcrs09.dgn

USERNAME => dwinrow DATE PLOTTED => 19 MAY 2009 TIME PLOTTED => 15:05:50

100 % PS&E

DIST.	COUNTY	ROUTE	KILOMETER POST TOTAL PROJECT	SHEET NO.	TOTAL SHEETS
04	SF	80	13.2/13.9	951R3	1204

REGISTERED ENGINEER - CIVIL

12-6-04

PLANS APPROVAL DATE

REGISTERED PROFESSIONAL ENGINEER Marwan N. Nader No. C 054426 Exp. 12/31/11 CIVIL STATE OF CALIFORNIA

The State of California or its officers or agents shall not be responsible for the accuracy or completeness of electronic copies of this plan sheet.

T.Y. LIN / MOFFATT & NICHOL
825 BATTERY STREET
SAN FRANCISCO, CA 94111

Caltrans now has a web site! To get to the web site, go to: http://www.dot.ca.gov

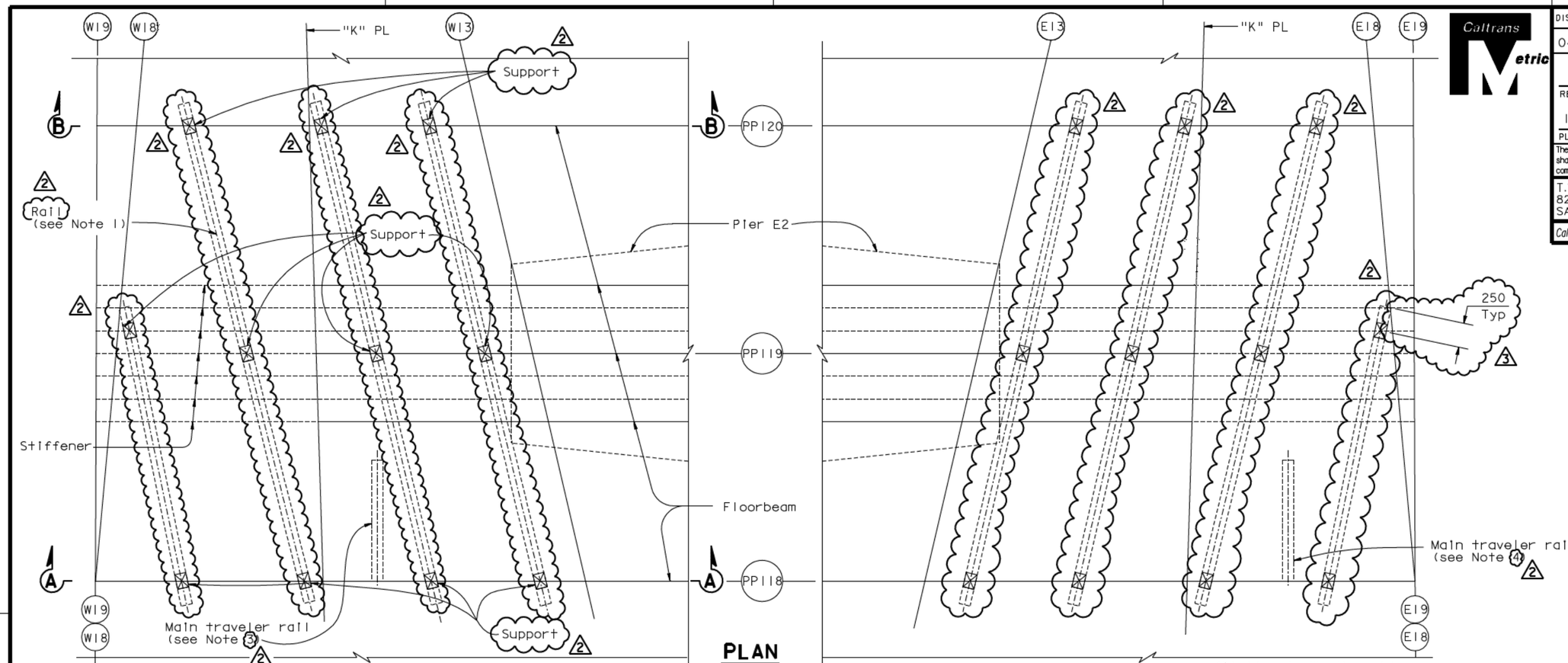

PLAN

GIRDER ACCESS AT PIER E2

(Not all stiffeners shown for clarity)

1:50

Westbound (Similar to Westbound by opposite hand except as shown) **Eastbound**

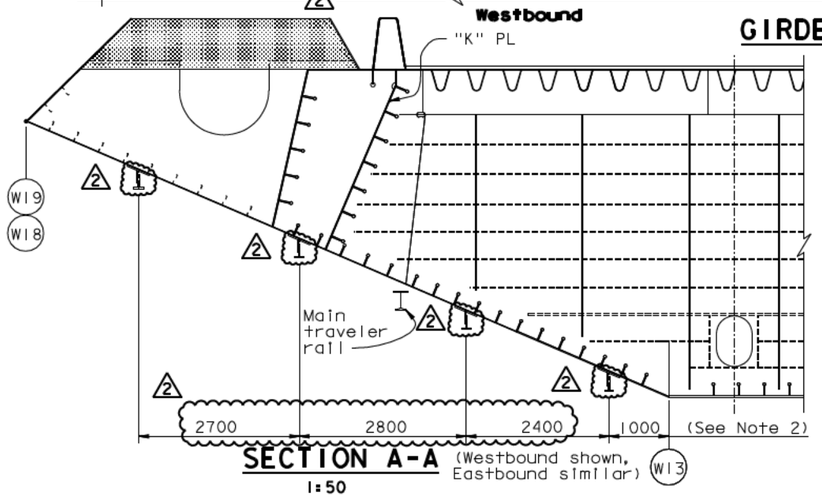

SECTION A-A

(Westbound shown, Eastbound similar)

1:50

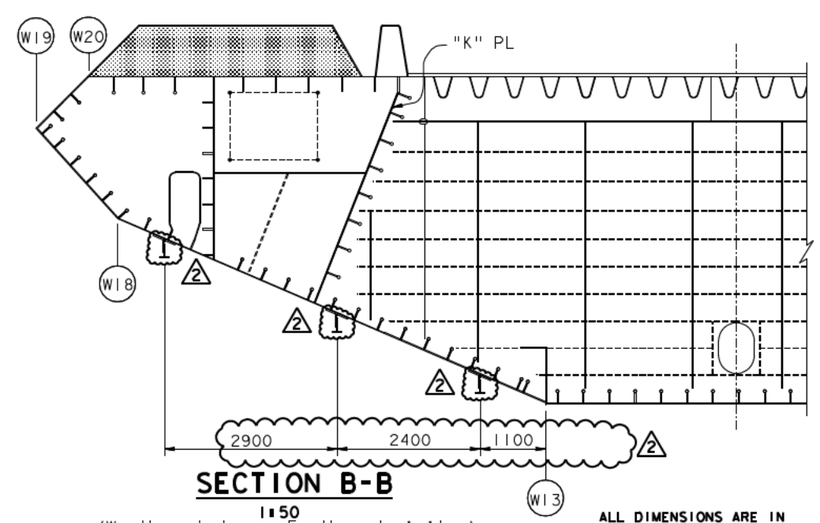

SECTION B-B

1:50

(Westbound shown, Eastbound similar)

LEGEND:

Cable Saddle housing

NOTES:

1. For rail details, see "Crossbeam Access Details No. 4" sheet.
2. Adjust support locations as neccessary to clear main traveler rail.
3. For main traveler rail layout, see "SAS-WB Traveler-Operating Ranges" sheets.
4. For main traveler rail layout, see "SAS-EB Traveler-Operating Ranges" sheets.

REVISION 2 SUPERSEDES REVISION 1

CONTRACT CHANGE ORDER NO.___
SHEET ___ OF ___

REQUESTS FOR INFORMATION NOT ADDRESSED IN THIS CCO REMAIN IN FORCE

MARK	DATE	DESCRIPTIONS	BY	CH'D	CCO#
3	04/08/10	TRAVELER RAIL MODIFICATIONS	MN	NV	24S0
2	06/19/09	TRAVELER RAIL MODIFICATIONS	MN	NV	24S0
1	07/20/07	RAIL CHANGE & MISCELLANEOUS DETAILS	MN	NV	24

REVISIONS

ALL DIMENSIONS ARE IN MILLIMETERS UNLESS OTHERWISE SHOWN

R. Vallizadeh/V. Toan/Y.L./W.L./F.C.
DESIGN OVERSIGHT
SIGN OFF DATE 04/08/10

	BY	CHECKED
DESIGN	M. Nader	N. Vo
DETAILS	G. Baker	N. Vo
QUANTITIES	G. Baker	N. Vo

PREPARED FOR THE STATE OF CALIFORNIA DEPARTMENT OF TRANSPORTATION

R. Manzanarez
PROJECT ENGINEER

BRIDGE NO. 34-0006L/R
KILOMETER POST 13.2/13.9

SAN FRANCISCO OAKLAND BAY BRIDGE
EAST SPAN SEISMIC SAFETY PROJECT
SELF-ANCHORED SUSPENSION BRIDGE
(SUPERSTRUCTURE & TOWER)

GIRDER ACCESS DETAILS NO. 11

Rev. Date: 5-18-98

ORIGINAL SCALE IN MILLIMETERS FOR REDUCED PLANS 0 10 20 30 40 50 60 70 80 90 100

CU 04
EA 0120F1

DISREGARD PRINTS BEARING EARLIER REVISION DATES 04/08/10 07/20/07 12/19/02

SHEET 534R3 OF

FILE -> I:\bb\04-012001\sas\contract plans and cco\cco\cco#24s0\9-revision 04-08-10\dgn\akacc17a.dgn

USERNAME => crvera DATE PLOTTED => 08 APR 2010 TIME PLOTTED => 15:31:56

100 % PS&E

DIST.	COUNTY	ROUTE	KILOMETER POST TOTAL PROJECT	SHEET NO.	TOTAL SHEETS
04	SF	80	13.2/13.9	952R3	1204

Caltrans Metric

REGISTERED ENGINEER - CIVIL

12-6-04

PLANS APPROVAL DATE

REGISTERED PROFESSIONAL ENGINEER Marwan N. Nader No. C 054426 Exp. 12/31/11 CIVIL STATE OF CALIFORNIA

The State of California or its officers or agents shall not be responsible for the accuracy or completeness of electronic copies of this plan sheet.

T.Y. LIN / MOFFATT & NICHOL
825 BATTERY STREET
SAN FRANCISCO, CA 94111

Caltrans now has a web site! To get to the web site, go to: http://www.dot.ca.gov

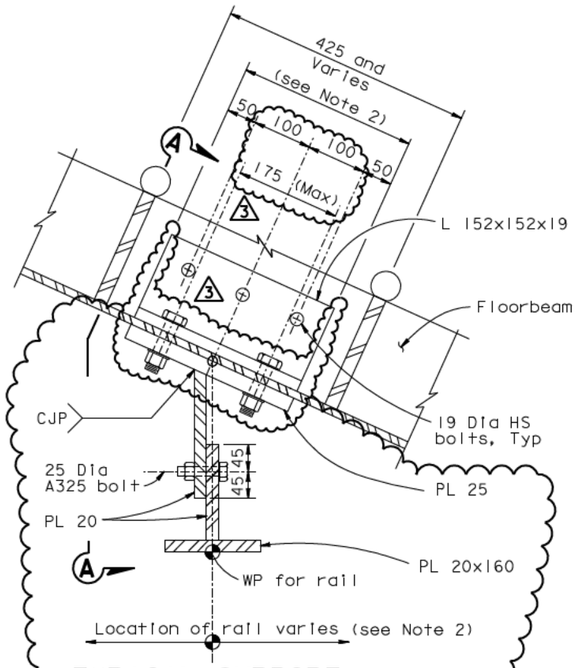

TYPICAL SUPPORT (see Note 3)
1:5

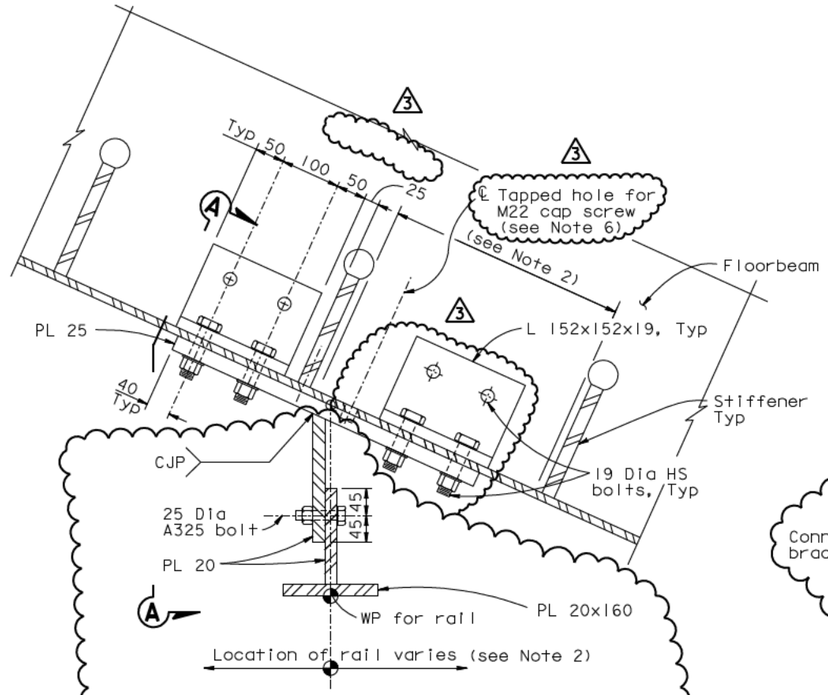

TYPICAL SUPPORT (NEAR STIFFENER) (see Note 3)
1:5

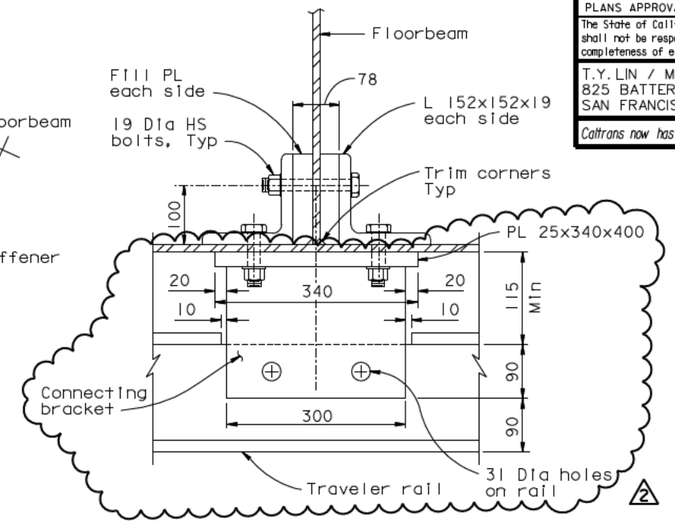

SECTION A-A
1:5

REVISION 2 SUPERSEDES REVISION 1

CONTRACT CHANGE ORDER NO. ____
SHEET ___ OF ___

REQUESTS FOR INFORMATION NOT ADDRESSED IN THIS CCO REMAIN IN FORCE

MARK	DATE	DESCRIPTIONS	BY	CH'D	CCO#
3	04/08/10	TRAVELER RAIL MODIFICATIONS	MN	NV	2450
2	06/23/09	TRAVELER RAIL MODIFICATIONS	MN	NV	2450
1	07/20/07	RAIL CHANGE & MISCELLANEOUS DETAILS	MN	NV	24

REVISIONS

NOTES:

1. For rail details see "Crossbeam Access Details No.4" sheet.
2. Use 4 L 152x152x19x200 where the rail WP lies within 100 of the stiffener base. Use 2 long L 152x152x19 as shown where the rail WP lies more than 100 from the stiffener.
3. For additional details not shown at typical support, see "Crossbeam Access Details No.4" sheet.
4. The bolt sizes shown correspond to US Standard bolt sizes.
5. For rail and support bracket general notes, see "Travelers-General Notes No.1 & 2" sheets.
6. M22 cap screws shall be provided where bolt spacing exceeds 175 mm.

ALL DIMENSIONS ARE IN MILLIMETERS UNLESS OTHERWISE SHOWN

R. Vallizadeh/V. Toan/Y.L./W.L./F.C.
DESIGN OVERSIGHT
SIGN OFF DATE 04/08/10

	BY	CHECKED
DESIGN	M. Nader	N. Vo
DETAILS	G. Baker	N. Vo
QUANTITIES	G. Baker	N. Vo

PREPARED FOR THE STATE OF CALIFORNIA DEPARTMENT OF TRANSPORTATION

R. Manzanarez
PROJECT ENGINEER

BRIDGE NO. 34-0006L/R
KILOMETER POST 13.2/13.9

SAN FRANCISCO OAKLAND BAY BRIDGE
EAST SPAN SEISMIC SAFETY PROJECT
SELF-ANCHORED SUSPENSION BRIDGE
(SUPERSTRUCTURE & TOWER)

GIRDER ACCESS DETAILS NO. 12

Rev. Date: 5-18-98

ORIGINAL SCALE IN MILLIMETERS FOR REDUCED PLANS 0 10 20 30 40 50 60 70 80 90 100

CU 04
EA 0120F1

DISREGARD PRINTS BEARING EARLIER REVISION DATES

REVISION DATES (PRELIMINARY STAGE ONLY) 04/08/02 07/01/02 12/19/02

SHEET 535R3 OF

FILE -> I:\bb\04-012001\sas\contract plans and cco\cco\cco#24s0\9-revision 04-08-10\dgn\akacc17b.dgn

USERNAME => orivera DATE PLOTTED => 08 APR 2010 TIME PLOTTED => 15:30:32

100 % PS&E

DIST.	COUNTY	ROUTE	KILOMETER POST TOTAL PROJECT	SHEET NO.	TOTAL SHEETS
04	SF	80	13.2/13.9	956R3	1204

REGISTERED ENGINEER - CIVIL

12-6-04

PLANS APPROVAL DATE

REGISTERED PROFESSIONAL ENGINEER Marwan N. Nader No. C 054426 Exp. 12/31/09 CIVIL STATE OF CALIFORNIA

The State of California or its officers or agents shall not be responsible for the accuracy or completeness of electronic copies of this plan sheet.

T.Y. LIN / MOFFATT & NICHOL
825 BATTERY STREET
SAN FRANCISCO, CA 94111

Caltrans now has a web site! To get to the web site, go to: http://www.dot.ca.gov

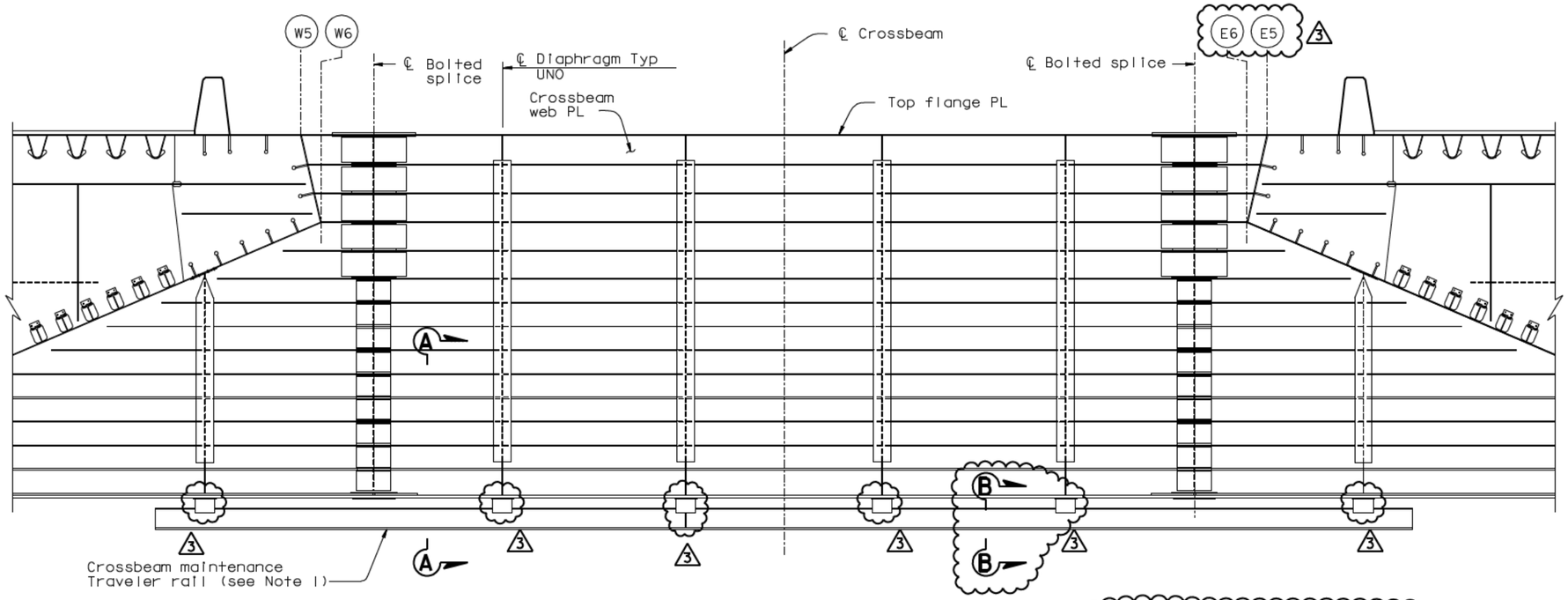

CROSSBEAM TRAVELER RAIL-ELEVATION

1:40

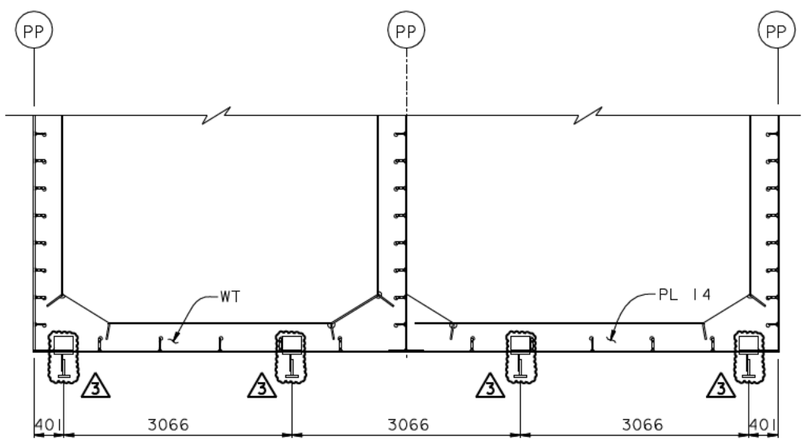

SECTION A-A (See Note 5)

1:40

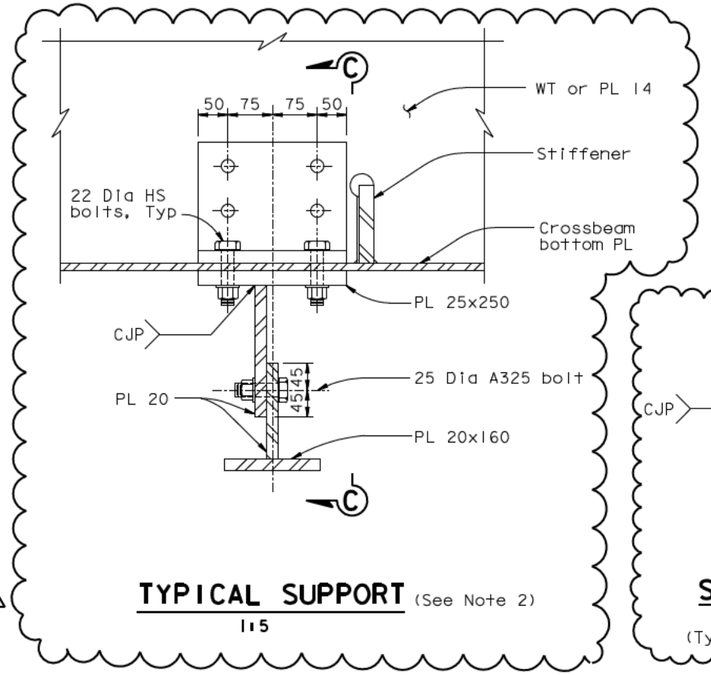

TYPICAL SUPPORT (See Note 2)

1:5

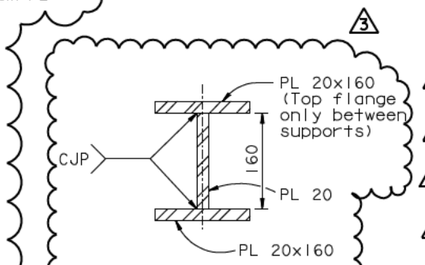

SECTION B-B

1:5
(Typical Rail Section)

NOTES:

1. Rail and connecting bracket material to be ASTM A709 grade 36. Rail and connecting bracket to be hot dip galvanized per specification.
2. For additional support details not shown, see "Crossbeam Access Details No.5" sheet.
3. All bolts to be ASTM A325 unless noted otherwise.
4. The traveler rail shall be straight. For crossbeams PP 14-28 and PP 125-127 the rail clearance shall vary between the specified supports.
5. Rolling offset may be adjusted to clear PL 14x290 at PP16, 22 and 28.
6. For rail and support bracket general notes, see "Travelers-General Notes No.1 & 2" sheets.

REVISION 3 SUPERSEDES REVISION 2

CONTRACT CHANGE ORDER NO. ____
SHEET ___ OF ___

REQUESTS FOR INFORMATION NOT ADDRESSED IN THIS CCO REMAIN IN FORCE

MARK	DATE	DESCRIPTIONS	BY	CH'D	CCO#
3	06/25/09	TRAVELER RAIL MODIFICATIONS	MN	NV	2450
2	07/20/07	RAIL CHANGE & MISCELLANEOUS DETAILS	MN	NV	24
1	04/02/07	CROSSBEAM KINK	MN	GB	38

REVISIONS

R. Valizadeh/V. Toan/Y.L./W.L./F.C.
DESIGN OVERSIGHT
SIGN OFF DATE 06/25/09

Rev. Date: 5-18-98

	BY	CHECKED
DESIGN	M. Nader	N. Vo
DETAILS	G. Baker	N. Vo
QUANTITIES	G. Baker	N. Vo

PREPARED FOR THE STATE OF CALIFORNIA DEPARTMENT OF TRANSPORTATION

R. Manzanarez
PROJECT ENGINEER

ALL DIMENSIONS ARE IN MILLIMETERS UNLESS OTHERWISE SHOWN

BRIDGE NO. 34-0006L/R
KILOMETER POST 13.2/13.9

SAN FRANCISCO OAKLAND BAY BRIDGE
EAST SPAN SEISMIC SAFETY PROJECT
SELF-ANCHORED SUSPENSION BRIDGE
(SUPERSTRUCTURE & TOWER)

CROSSBEAM ACCESS DETAILS NO. 4

ORIGINAL SCALE IN MILLIMETERS FOR REDUCED PLANS 0 10 20 30 40 50 60 70 80 90 100

CU 04
EA 0120F1

DISREGARD PRINTS BEARING EARLIER REVISION DATES 04/08/02 07/20/02 12/19/02

REVISION DATES (PRELIMINARY STAGE ONLY)

SHEET 539R3 OF

FILE -> L:\BB\04-012001\SAS\Contract Plans and CCO\CCO\CCO#2450\6-Update 06-25-09\DGN\akcad04.dgn

USERNAME => dwinrow DATE PLOTTED => 25 JUN 2009 TIME PLOTTED => 10:03:47

100% PS&E

DIST.	COUNTY	ROUTE	KILOMETER POST TOTAL PROJECT	SHEET NO.	TOTAL SHEETS
04	SF	80	13.2/13.9	956S1R1	1204

REGISTERED ENGINEER - CIVIL

07-20-07

PLANS APPROVAL DATE

REGISTERED PROFESSIONAL ENGINEER Marwan N. Nader No. C 054426 Exp. 12/31/09 CIVIL STATE OF CALIFORNIA

The State of California or its officers or agents shall not be responsible for the accuracy or completeness of electronic copies of this plan sheet.

T.Y. LIN / MOFFATT & NICHOL
825 BATTERY STREET
SAN FRANCISCO, CA 94111

Caltrans now has a web site! To get to the web site, go to: http://www.dot.ca.gov

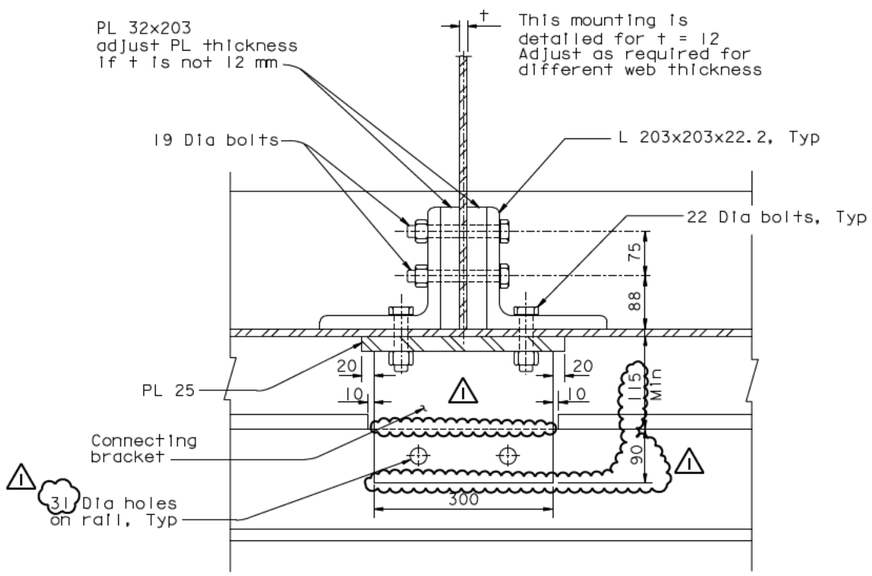

TYPICAL SUPPORT

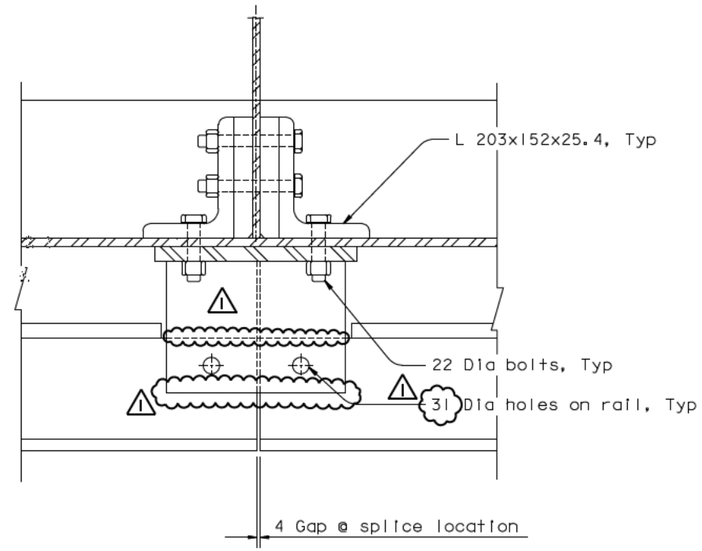

SUPPORT @ SPLICE LOCATION

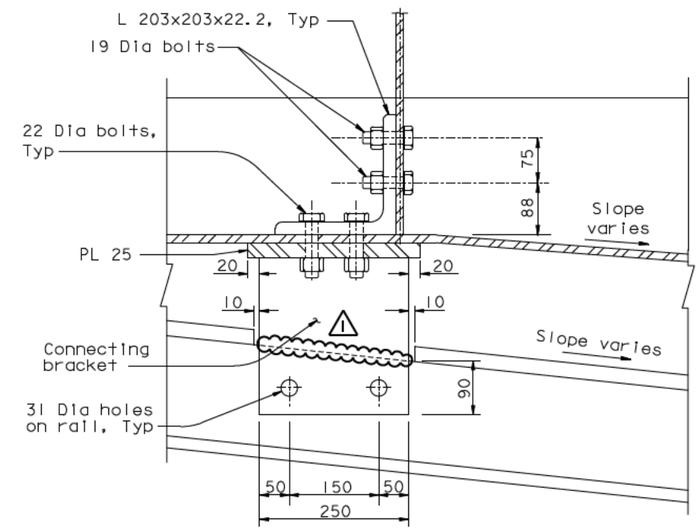

SUPPORT @ CROSS BEAM FLANGE BEND
(PP14 - 28)

SECTION C-C
1:5

REVISION 1 SUPERSEDES REVISION 0

CONTRACT CHANGE ORDER NO. ____
SHEET ___ OF ___

REQUESTS FOR INFORMATION NOT ADDRESSED IN THIS CCO REMAIN IN FORCE

ALL DIMENSIONS ARE IN MILLIMETERS UNLESS OTHERWISE SHOWN

MARK	DATE	DESCRIPTIONS	BY	CH'D	CCO#
1	06/19/09	TRAVELER RAIL MODIFICATIONS	MN	NV	2450
0	07/20/07	RAIL CHANGE AND MISCELLANEOUS DETAILS	MN	NV	24

REVISIONS

R. Vallizadeh/V. Toan/Y.L./W.L./F.C.
DESIGN OVERSIGHT
SIGN OFF DATE 06/19/09

	BY	CHECKED
DESIGN	M. Nader	N. Vo
DETAILS	G. Baker	H. Tazir
QUANTITIES	G. Baker	N. Vo

PREPARED FOR THE STATE OF CALIFORNIA DEPARTMENT OF TRANSPORTATION

R. Manzanarez
PROJECT ENGINEER

BRIDGE NO. 34-0006L/R
KILOMETER POST 13.2/13.9

SAN FRANCISCO OAKLAND BAY BRIDGE
EAST SPAN SEISMIC SAFETY PROJECT
SELF-ANCHORED SUSPENSION BRIDGE
(SUPERSTRUCTURE & TOWER)

CROSSBEAM ACCESS DETAILS NO. 5

Rev. Date: 5-18-98

ORIGINAL SCALE IN MILLIMETERS FOR REDUCED PLANS 0 10 20 30 40 50 60 70 80 90 100

CU 04
EA 0120F1

DISREGARD PRINTS BEARING EARLIER REVISION DATES 07/20/07

REVISION DATES (PRELIMINARY STAGE ONLY)

SHEET 539S1R1 OF

FILE -> I:\bb\04-012001\sas\contract plans and cco\cco\cco#24s0\4-update 06-19-09\dgn\akcad05.dgn

100 % PS&E

USERNAME => dwinrow DATE PLOTTED => 22 JUN 2009 TIME PLOTTED => 11:54:34

DIST.	COUNTY	ROUTE	KILOMETER POST TOTAL PROJECT	SHEET NO.	TOTAL SHEETS
04	SF	80	13.2/13.9	1009R2	1204

REGISTERED ENGINEER - CIVIL

12-6-04
PLANS APPROVAL DATE

The State of California or its officers or agents shall not be responsible for the accuracy or completeness of electronic copies of this plan sheet.

REGISTERED PROFESSIONAL ENGINEER Marwan N. Nader No. C 054426 Exp. 12/31/09 CIVIL STATE OF CALIFORNIA

T.Y. LIN / MOFFATT & NICHOL
825 BATTERY STREET
SAN FRANCISCO, CA 94111

Caltrans now has a web site! To get to the web site, go to: http://www.dot.ca.gov

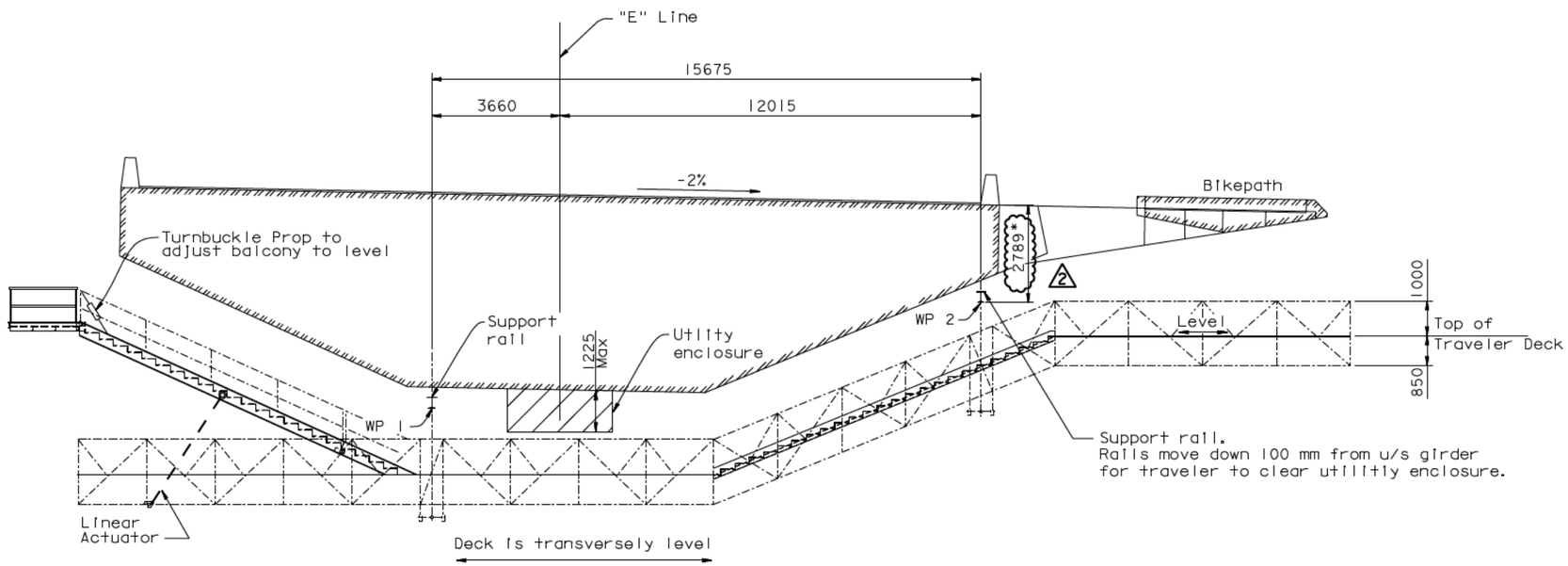

SAS-EB TRAVELER
CLOSE TO FACE OF PIER W2E

1:80

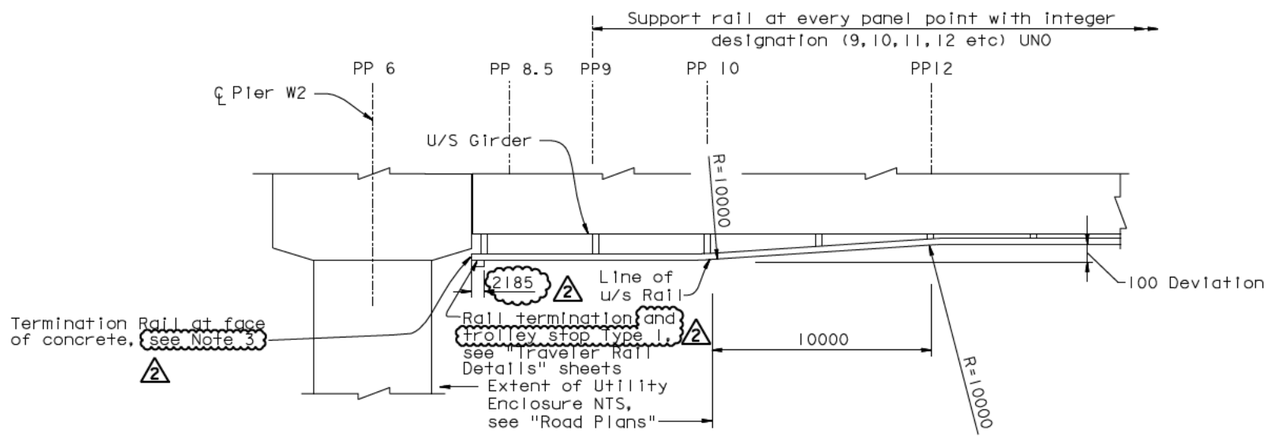

Increase Vertical dimension of Rail Supports to achieve this profile.

RAIL TRANSITION DETAIL

NTS

NOTES:

1. For general dimensions and notes see "SAS-EB Traveler Operating Ranges-03" sheet.
2. All layout dimensions are given truly horizontal and truly vertical.
3. (2) For rail termination location see "Traveler Rail Details No. 13" sheet.

* Denotes vertical dimension from top of girder to u/s rail.

(2) REVISION (2) SUPERSEDES REVISION (1)

CONTRACT CHANGE ORDER NO. ____
SHEET ___ OF ___

REQUESTS FOR INFORMATION NOT ADDRESSED IN THIS CCO REMAIN IN FORCE

ALL DIMENSIONS ARE IN MILLIMETERS UNLESS OTHERWISE SHOWN

MARK	DATE	DESCRIPTIONS	BY	CH'D	CCO#
2	05/18/09	TRAVELER RAIL MODIFICATIONS	MN	NV	24S0
1	08/04/06	TRAVELER RAILS	MN	NV	24

REVISIONS

R. Valizadeh/V. Toan/Y.L./W.L./F.C.
DESIGN OVERSIGHT
Roya Valizadeh / Vong Toan / Y. Liu
SIGN OFF DATE 05/18/09

DESIGN BY J. Otter CHECKED M. Nader
DETAILS BY J. Otter CHECKED N. Vo
QUANTITIES BY J. Otter CHECKED J. Leventini

PREPARED FOR THE STATE OF CALIFORNIA DEPARTMENT OF TRANSPORTATION

R. Manzanarez
PROJECT ENGINEER

BRIDGE NO. 34-0006L/R
KILOMETER POST 13.2/13.9

SAN FRANCISCO OAKLAND BAY BRIDGE
EAST SPAN SEISMIC SAFETY PROJECT
SELF-ANCHORED SUSPENSION BRIDGE
(SUPERSTRUCTURE & TOWER)

SAS-EB TRAVELER OPERATING RANGES-01

Rev. Date: 5-18-98

ORIGINAL SCALE IN MILLIMETERS FOR REDUCED PLANS 0 10 20 30 40 50 60 70 80 90 100

CU 04
EA 0120F1

DISREGARD PRINTS BEARING EARLIER REVISION DATES

REVISION DATES (PRELIMINARY STAGE ONLY) 04/08/02 04/15/02 07/24/02 12/19/02

SHEET 592R2 OF

FILE -> I:\bb\04-01200I\sas\contract plans and cco\cco\cco#24s0\2-revision 05-18-09\dgn\aktrv004.dgn

100 % PS&E

USERNAME => dwinrow DATE PLOTTED => 19 MAY 2009 TIME PLOTTED => 15:38:53

DIST.	COUNTY	ROUTE	KILOMETER POST TOTAL PROJECT	SHEET NO.	TOTAL SHEETS
04	SF	80	13.2/13.9	1010R2	1204

REGISTERED ENGINEER - CIVIL

12-6-04

PLANS APPROVAL DATE

The State of California or its officers or agents shall not be responsible for the accuracy or completeness of electronic copies of this plan sheet.

REGISTERED PROFESSIONAL ENGINEER Marwan N. Nader No. C 054426 Exp. 12/31/09 CIVIL STATE OF CALIFORNIA

T.Y. LIN / MOFFATT & NICHOL
825 BATTERY STREET
SAN FRANCISCO, CA 94111

Caltrans now has a web site! To get to the web site, go to http://www.dot.ca.gov

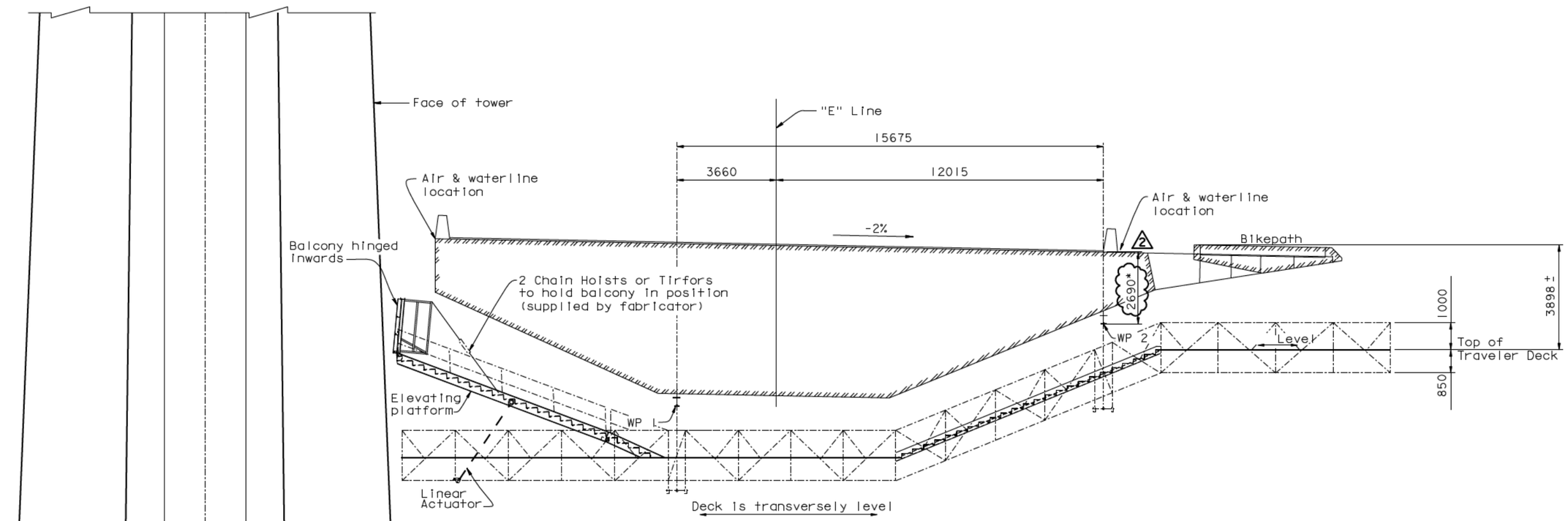

SAS-EB TRAVELER PASSING TOWER

1:80

NOTES:

1. For general dimensions and notes see "SAS-EB Traveler Operating Ranges-03" sheet.
2. All layout dimensions are given truly horizontal and truly vertical.

* Denotes vertical dimension from top of girder to u/s rail.

2 REVISION 2 SUPERSEDES REVISION 1

CONTRACT CHANGE ORDER NO. ____
SHEET ___ OF ___

REQUESTS FOR INFORMATION NOT ADDRESSED IN THIS CCO REMAIN IN FORCE

ALL DIMENSIONS ARE IN MILLIMETERS UNLESS OTHERWISE SHOWN

R. Vallizadeh/V. Toan/Y.L./W.L./F.C.
DESIGN OVERSIGHT
Roya Vallizadeh / Vong Toan / Y. Liu
SIGN OFF DATE 05/18/09

MARK	DATE	DESCRIPTIONS	BY	CH'D	CCO#
2	05/18/09	TRAVELER RAIL MODIFICATIONS	MN	NV	24S0
1	08/04/06	TRAVELER RAILS	MN	NV	24

REVISIONS

	BY	CHECKED
DESIGN	J. Otter	M. Nader
DETAILS	J. Otter	N. Vo
QUANTITIES	J. Otter	J. Leventini

PREPARED FOR THE STATE OF CALIFORNIA DEPARTMENT OF TRANSPORTATION

R. Manzanarez
PROJECT ENGINEER

BRIDGE NO. 34-0006L/R
KILOMETER POST 13.2/13.9

SAN FRANCISCO OAKLAND BAY BRIDGE
EAST SPAN SEISMIC SAFETY PROJECT
SELF-ANCHORED SUSPENSION BRIDGE
(SUPERSTRUCTURE & TOWER)

SAS-EB TRAVELER OPERATING RANGES-02

Rev. Date: 5-18-98

ORIGINAL SCALE IN MILLIMETERS FOR REDUCED PLANS 0 10 20 30 40 50 60 70 80 90 100

CU 04
EA 0120F1

DISREGARD PRINTS BEARING EARLIER REVISION DATES

REVISION DATES (PRELIMINARY STAGE ONLY) 04/08/02 04/15/02 07/09/02 12/19/02

SHEET 593R2 OF

FILE -> I:\bb\04-012001\sas\contract plans and cco\cco\cco#24s0\2-revision 05-18-09\dgn\aktrv005.dgn

100 % PS&E

USERNAME => dwinrow DATE PLOTTED => 19 MAY 2009 TIME PLOTTED => 15:22:31

DIST.	COUNTY	ROUTE	KILOMETER POST TOTAL PROJECT	SHEET NO.	TOTAL SHEETS
04	SF	80	13.2/13.9	1011R3	1204

REGISTERED ENGINEER - CIVIL

12-6-04

PLANS APPROVAL DATE

The State of California or its officers or agents shall not be responsible for the accuracy or completeness of electronic copies of this plan sheet.

REGISTERED PROFESSIONAL ENGINEER Marwan N. Nader No. C 054426 Exp. 12/31/09 CIVIL STATE OF CALIFORNIA

T.Y. LIN / MOFFATT & NICHOL
825 BATTERY STREET
SAN FRANCISCO, CA 94111

Caltrans now has a web site! To get to the web site, go to http://www.dot.ca.gov

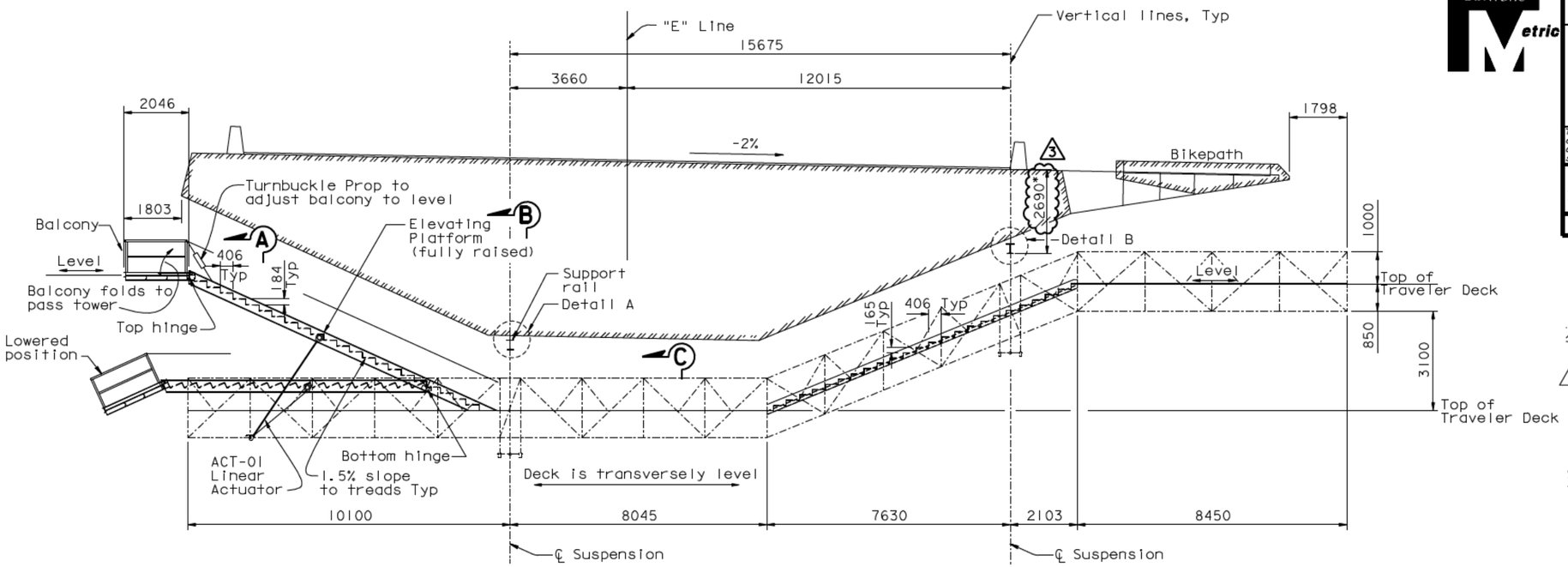

SAS-EB TRAVELER

CONTROLLING DIMENSIONS AT TYP SECTION

1:80

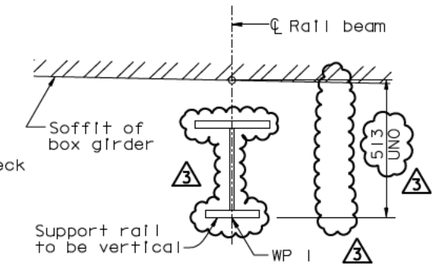

WP 1 Definition

DETAIL A

1:10

NOTES:

1. For rail details and rail mounts see "Traveler Rail Details" sheets.
2. Support rails at panel points such that the rails span does not exceed 5300 mm.
3. Use these drawings to locate rail positions.
4. All layout dimensions are given truly horizontal and truly vertical.

* Denotes vertical dimension from top of girder to u/s rail.

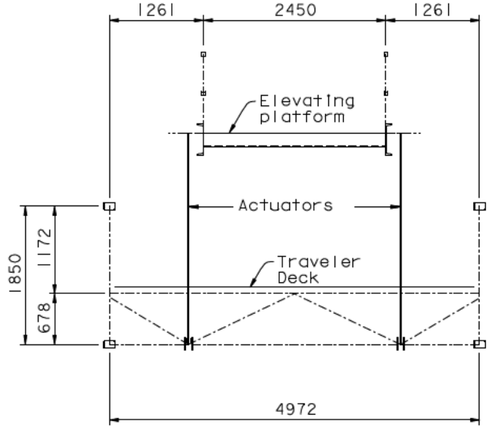

SECTION A-A

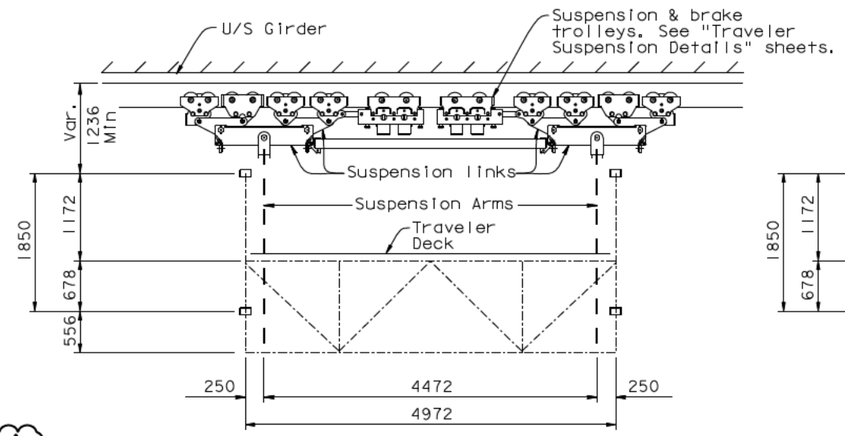

SECTION B-B

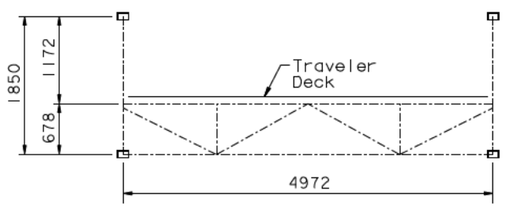

SECTION C-C

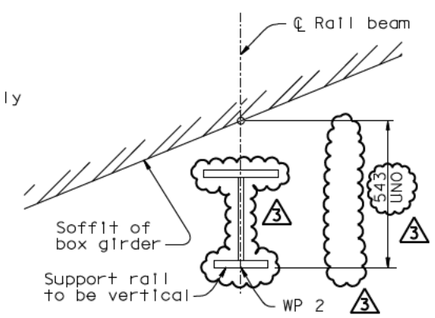

WP 2 Definition

DETAIL B

1:10

SCHEMATIC CROSS SECTIONS

1:40

ALL DIMENSIONS ARE IN MILLIMETERS UNLESS OTHERWISE SHOWN

3 REVISION 3 SUPERSEDES REVISIONS 1 & 2

CONTRACT CHANGE ORDER NO. ____
SHEET ____ OF ____

REQUESTS FOR INFORMATION NOT ADDRESSED IN THIS CCO REMAIN IN FORCE

MARK	DATE	DESCRIPTIONS	BY	CH'D	CCO#
3	05/18/09	TRAVELER RAIL MODIFICATIONS	MN	NV	24S0
2	07/20/07	RAIL CHANGE & MISCELLANEOUS DETAILS	MN	NV	24
1	08/04/06	TRAVELER RAILS	MN	NV	24

REVISIONS

R. Vallizadeh/V. Toan/Y.L./W.L./F.C.
DESIGN OVERSIGHT
Roya Vallizadeh / Vong Toan / Y. Liu
SIGN OFF DATE 05/18/09

Rev. Date: 5-18-98

	BY	CHECKED
DESIGN	J. Otter	M. Nader
DETAILS	J. Otter	N. Vo
QUANTITIES	J. Otter	J. Leventini

PREPARED FOR THE STATE OF CALIFORNIA DEPARTMENT OF TRANSPORTATION

R. Manzanarez
PROJECT ENGINEER

BRIDGE NO. 34-0006L/R
KILOMETER POST 13.2/13.9

CU 04
EA 0120F1

DISREGARD PRINTS BEARING EARLIER REVISION DATES 04/08/02 04/15/02 07/09/02 12/19/02

SAN FRANCISCO OAKLAND BAY BRIDGE
EAST SPAN SEISMIC SAFETY PROJECT
SELF-ANCHORED SUSPENSION BRIDGE
(SUPERSTRUCTURE & TOWER)

SAS-EB TRAVELER OPERATING RANGES-03

SHEET 594R3 OF

ORIGINAL SCALE IN MILLIMETERS FOR REDUCED PLANS 0 10 20 30 40 50 60 70 80 90 100

FILE -> I:\bb\04-012001\sas\contract plans and cco\cco\cco#24s0\2-revision 05-18-09\dgn\aktrv006.dgn

100 % PS&E

USERNAME => dwinrow DATE PLOTTED => 19 MAY 2009 TIME PLOTTED => 15:41:09

DIST.	COUNTY	ROUTE	KILOMETER POST TOTAL PROJECT	SHEET NO.	TOTAL SHEETS
04	SF	80	13.2/13.9	1012R2	1204

REGISTERED ENGINEER - CIVIL

12-6-04
PLANS APPROVAL DATE

REGISTERED PROFESSIONAL ENGINEER Marwan N. Nader No. C 054426 Exp. 12/31/09 CIVIL STATE OF CALIFORNIA

The State of California or its officers or agents shall not be responsible for the accuracy or completeness of electronic copies of this plan sheet.

T.Y. LIN / MOFFATT & NICHOL
825 BATTERY STREET
SAN FRANCISCO, CA 94111

Caltrans now has a web site! To get to the web site, go to: http://www.dot.ca.gov

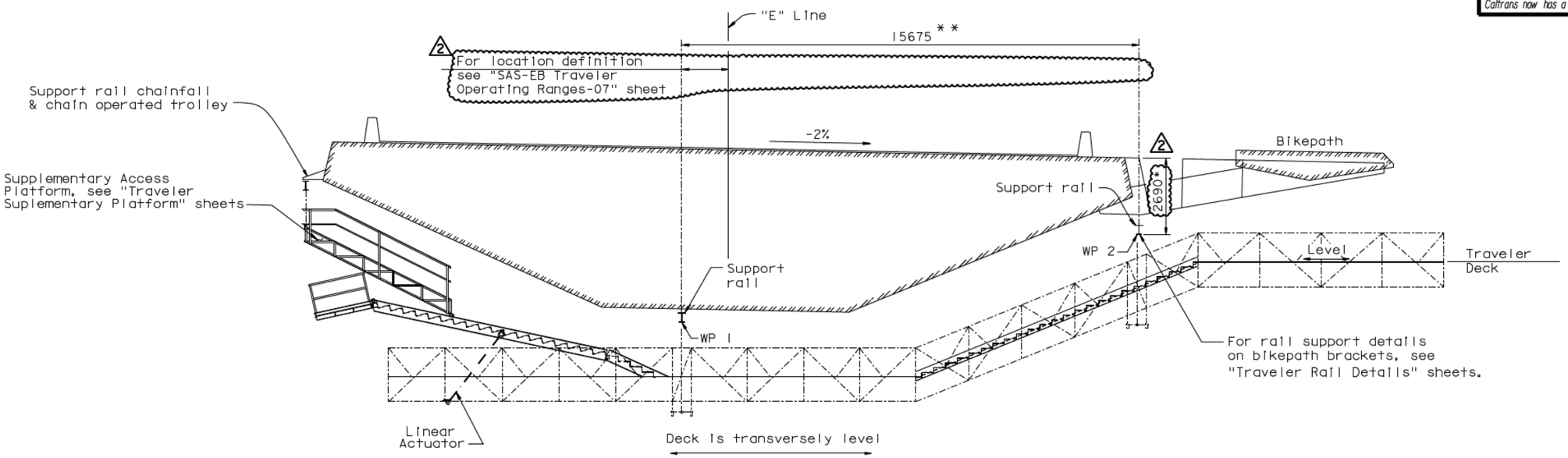

SAS-EB TRAVELER WITH SUPPLEMENTARY ACCESS PLATFORM

AT PP115

1:80

NOTES:

1. For general dimensions and notes see "SAS-EB Traveler Operating Ranges - 03" sheet.
2. All layout dimensions are given truly horizontal and truly vertical.

* Denotes vertical dimension from top of girder to u/s rail.

** Denotes Gage, see "SAS-EB Traveler Operating Ranges - 07" sheet.

2 REVISION 2 SUPERSEDES REVISION 1

CONTRACT CHANGE ORDER NO. ____
SHEET ___ OF ___

REQUESTS FOR INFORMATION NOT ADDRESSED IN THIS CCO REMAIN IN FORCE

ALL DIMENSIONS ARE IN MILLIMETERS UNLESS OTHERWISE SHOWN

MARK	DATE	DESCRIPTIONS	BY	CH'D	CCO#
2	05/18/09	TRAVELER RAIL MODIFICATIONS	MN	NV	2450
1	08/04/06	TRAVELER RAILS	MN	NV	24

REVISIONS

R. Valizadeh/V. Toan/Y.L./W.L./F.C.
DESIGN OVERSIGHT
SIGN OFF DATE 05/18/09

	BY	CHECKED
DESIGN	J. Otter	M. Nader
DETAILS	J. Otter	N. Vo
QUANTITIES	J. Otter	J. Leventini

PREPARED FOR THE STATE OF CALIFORNIA DEPARTMENT OF TRANSPORTATION

R. Manzanarez
PROJECT ENGINEER

BRIDGE NO. 34-0006L/R
KILOMETER POST 13.2/13.9

SAN FRANCISCO OAKLAND BAY BRIDGE
EAST SPAN SEISMIC SAFETY PROJECT
SELF-ANCHORED SUSPENSION BRIDGE
(SUPERSTRUCTURE & TOWER)

SAS-EB TRAVELER OPERATING RANGES-04

Rev. Date: 5-18-98

ORIGINAL SCALE IN MILLIMETERS FOR REDUCED PLANS 0 10 20 30 40 50 60 70 80 90 100

CU 04
EA 0120F1

DISREGARD PRINTS BEARING EARLIER REVISION DATES

REVISION DATES (PRELIMINARY STAGE ONLY) 04/08/02 04/15/02 07/01/02 12/19/02

SHEET 595R2 OF

FILE -> I:\bb\04-012001\sas\contract plans and cco\cco\cco#2450\2-revision 05-18-09\dgn\aktrv007.dgn

100% PS&E

USERNAME => dwinrow DATE PLOTTED => 19 MAY 2009 TIME PLOTTED => 15:42:24

DIST.	COUNTY	ROUTE	KILOMETER POST TOTAL PROJECT	SHEET NO.	TOTAL SHEETS
04	SF	80	13.2/13.9	1013R3	1204

REGISTERED ENGINEER - CIVIL

12-6-04
PLANS APPROVAL DATE

REGISTERED PROFESSIONAL ENGINEER Marwan N. Nader No. C 054426 Exp. 12/31/11 CIVIL STATE OF CALIFORNIA

The State of California or its officers or agents shall not be responsible for the accuracy or completeness of electronic copies of this plan sheet.

T.Y. LIN / MOFFATT & NICHOL
825 BATTERY STREET
SAN FRANCISCO, CA 94111

Caltrans now has a web site! To get to the web site, go to: http://www.dot.ca.gov

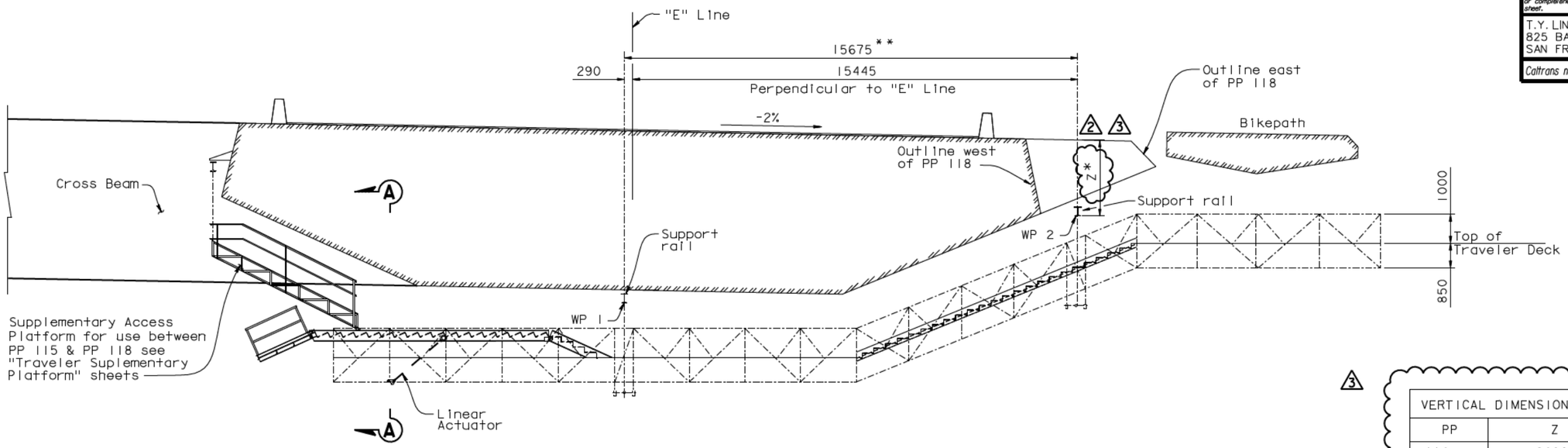

SAS-EB TRAVELER AT PP 118

1:80

VERTICAL DIMENSION TABLE	
PP	Z
116	2690
117	2733
118	2775
118.35	2790

NOTES:

1. For general dimensions and notes see "SAS-EB Traveler Operating Ranges - 03" sheet.
2. All layout dimensions are given truly horizontal and truly vertical.

* Denotes vertical dimension from top of girder to u/s rail.

3 For values, see "Vertical Dimension Table".

** Denotes Gage, see "SAS-EB Traveler Operating Ranges - 07" sheet.

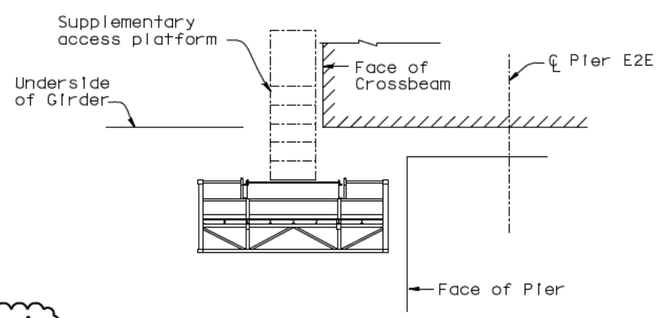

SECTION A-A

NTS

2 REVISION 2 SUPERSEDES REVISION 1

CONTRACT CHANGE ORDER NO. ____
SHEET ___ OF ___

REQUESTS FOR INFORMATION NOT ADDRESSED IN THIS CCO REMAIN IN FORCE

MARK	DATE	DESCRIPTIONS	BY	CH'D	CCO#
3	03/05/10	TRAVELER RAIL MODIFICATIONS	MN	NV	2450
2	05/18/09	TRAVELER RAIL MODIFICATIONS	MN	NV	2450
1	08/04/06	TRAVELER RAILS	MN	NV	24

REVISIONS

R. Valizadeh/V. Toan/Y.L./W.L./F.C.
DESIGN OVERSIGHT
Roya Valizadeh / Vong Toan / Y. Liu
SIGN OFF DATE 03/09/10

Rev. Date: 5-18-98

	BY	CHECKED
DESIGN	J. Otter	M. Nader
DETAILS	J. Otter	N. Vo
QUANTITIES	J. Otter	J. Leventini

ORIGINAL SCALE IN MILLIMETERS FOR REDUCED PLANS 0 10 20 30 40 50 60 70 80 90 100

PREPARED FOR THE STATE OF CALIFORNIA DEPARTMENT OF TRANSPORTATION

ALL DIMENSIONS ARE IN MILLIMETERS UNLESS OTHERWISE SHOWN

R. Manzanarez
PROJECT ENGINEER

CU 04
EA 0120F1

BRIDGE NO. 34-0006L/R
KILOMETER POST 13.2/13.9

DISREGARD PRINTS BEARING EARLIER REVISION DATES

SAN FRANCISCO OAKLAND BAY BRIDGE
EAST SPAN SEISMIC SAFETY PROJECT
SELF-ANCHORED SUSPENSION BRIDGE
(SUPERSTRUCTURE & TOWER)

SAS-EB TRAVELER OPERATING RANGES-05

REVISION DATES (PRELIMINARY STAGE ONLY) 04/08/02 04/15/02 07/09/02 12/19/02

SHEET 596R3 OF

FILE -> I:\bb\04-012001\sas\contract plans and cco\cco\cco#24s0\7-revision 03-05-10\dgn\aktrv008.dgn

100% PS&E

USERNAME => arivera DATE PLOTTED => 05 MAR 2010 TIME PLOTTED => 07:39:20

DIST.	COUNTY	ROUTE	KILOMETER POST TOTAL PROJECT	SHEET NO.	TOTAL SHEETS
04	SF	80	13.2/13.9	1014R2	1204

REGISTERED ENGINEER - CIVIL

12-6-04
PLANS APPROVAL DATE

REGISTERED PROFESSIONAL ENGINEER Marwan N. Nader No. C 054426 Exp. 12/31/09 CIVIL STATE OF CALIFORNIA

The State of California or its officers or agents shall not be responsible for the accuracy or completeness of electronic copies of this plan sheet.

T.Y. LIN / MOFFATT & NICHOL
825 BATTERY STREET
SAN FRANCISCO, CA 94111

Caltrans now has a web site! To get to the web site, go to: http://www.dot.ca.gov

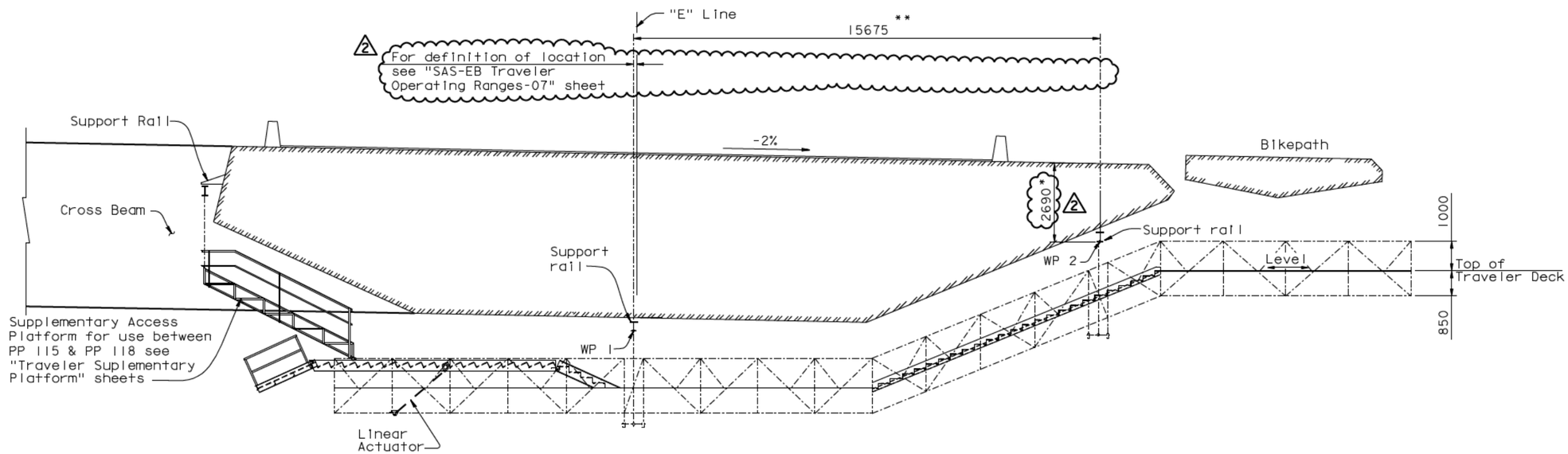

SAS-EB TRAVELER

AT LIMIT OF TRAVEL (FACE OF PIER E2E)

1:80

NOTES:

1. For general dimensions and notes see "SAS-EB Traveler Operating Ranges - 03" sheet.
2. All layout dimensions are given truly horizontal and truly vertical.

* Denotes vertical dimension from top of girder to u/s rail.

** Denotes Gage, see "SAS-EB Traveler Operating Ranges - 07" sheet.

2 REVISION 2 SUPERSEDES REVISION 1

CONTRACT CHANGE ORDER NO. ____
SHEET ___ OF ___

REQUESTS FOR INFORMATION NOT ADDRESSED IN THIS CCO REMAIN IN FORCE

ALL DIMENSIONS ARE IN MILLIMETERS UNLESS OTHERWISE SHOWN

R. Vallzadeh/V. Toan/Y.L./W.L./F/C.
DESIGN OVERSIGHT
SIGN OFF DATE 05/18/09

MARK	DATE	DESCRIPTIONS	BY	CH'D	CCO#
2	05/18/09	TRAVELER RAIL MODIFICATIONS	MN	NV	2450
1	08/04/06	TRAVELER RAILS	MN	NV	24

REVISIONS

DESIGN	BY J. Otter	CHECKED M. Nader	
DETAILS	BY J. Otter	CHECKED N. Vo	
QUANTITIES	BY J. Otter	CHECKED J. Leventini	

PREPARED FOR THE STATE OF CALIFORNIA DEPARTMENT OF TRANSPORTATION

R. Manzanarez
PROJECT ENGINEER

BRIDGE NO. 34-0006L/R
KILOMETER POST 13.2/13.9

SAN FRANCISCO OAKLAND BAY BRIDGE
EAST SPAN SEISMIC SAFETY PROJECT
SELF-ANCHORED SUSPENSION BRIDGE
(SUPERSTRUCTURE & TOWER)

SAS-EB TRAVELER OPERATING RANGES-06

Rev. Date: 5-18-98

ORIGINAL SCALE IN MILLIMETERS FOR REDUCED PLANS 0 10 20 30 40 50 60 70 80 90 100

CU 04
EA 0120F1

DISREGARD PRINTS BEARING EARLIER REVISION DATES

REVISION DATES (PRELIMINARY STAGE ONLY) 04/08/02 04/15/02 07/09/02 12/19/02

SHEET 597R2 OF

FILE -> I:\bb\04-012001\sas\contract plans and cco\cco\cco#2450\2-revision 05-18-09\dgn\aktrv009.dgn

USERNAME => dwinrow DATE PLOTTED => 19 MAY 2009 TIME PLOTTED => 15:47:00

100 % PS&E

DIST.	COUNTY	ROUTE	KILOMETER POST TOTAL PROJECT	SHEET NO.	TOTAL SHEETS
04	SF	80	13.2/13.9	1015R2	1204

REGISTERED ENGINEER - CIVIL

12-6-04
PLANS APPROVAL DATE

REGISTERED PROFESSIONAL ENGINEER Marwan N. Nader No. C 054426 Exp. 12/31/09 CIVIL STATE OF CALIFORNIA

The State of California or its officers or agents shall not be responsible for the accuracy or completeness of electronic copies of this plan sheet.

T.Y. LIN / MOFFATT & NICHOL
825 BATTERY STREET
SAN FRANCISCO, CA 94111

Caltrans now has a web site! To get to the web site, go to: http://www.dot.ca.gov

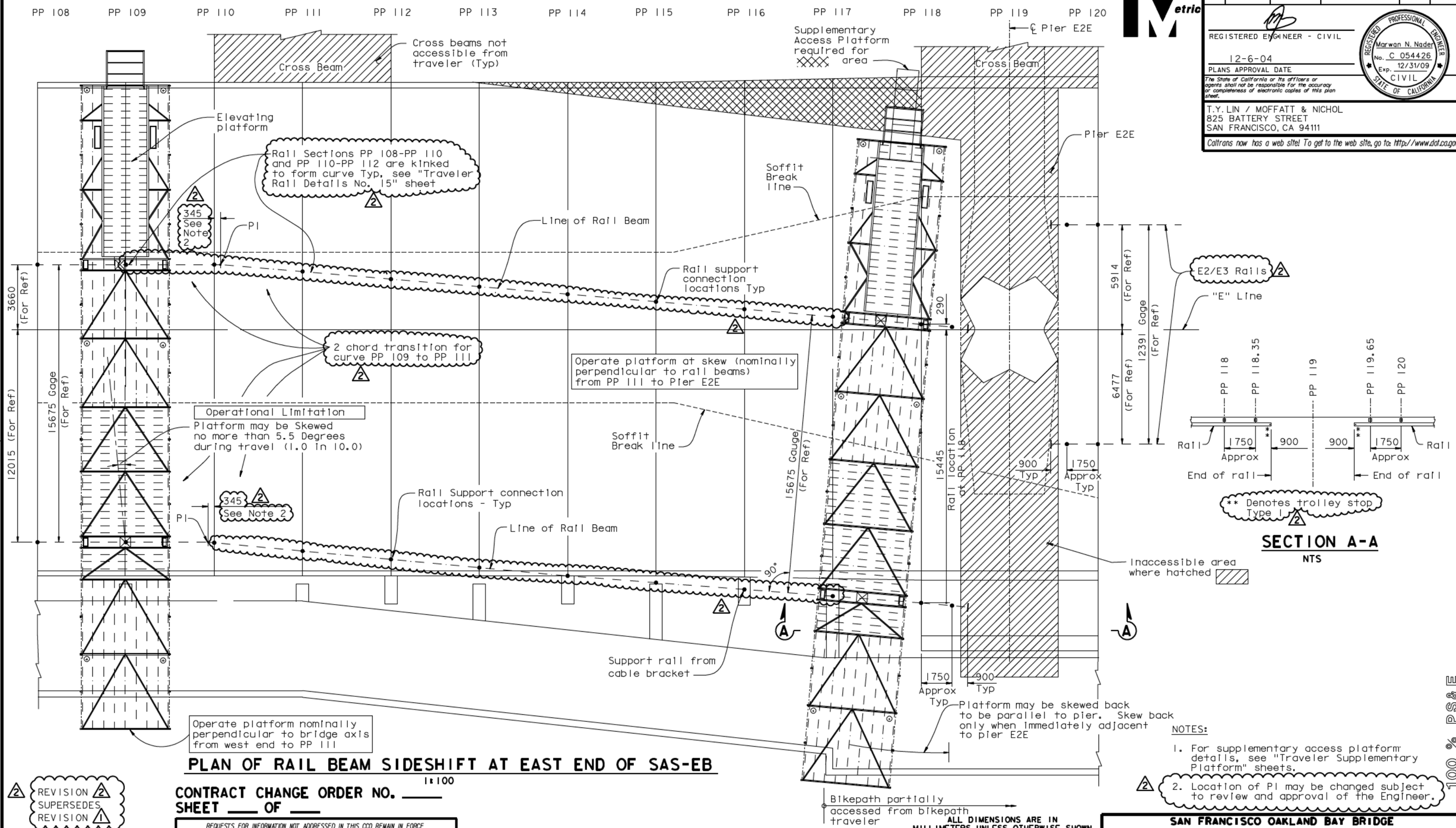

PLAN OF RAIL BEAM SIDESHIFT AT EAST END OF SAS-EB

1:100

NOTES:

1. For supplementary access platform details, see "Traveler Supplementary Platform" sheets.
2. Location of PI may be changed subject to review and approval of the Engineer.

REVISION 2
SUPERSEDES REVISION 1

CONTRACT CHANGE ORDER NO. _____
SHEET ___ OF ___

REQUESTS FOR INFORMATION NOT ADDRESSED IN THIS CCO REMAIN IN FORCE

ALL DIMENSIONS ARE IN MILLIMETERS UNLESS OTHERWISE SHOWN

MARK	DATE	DESCRIPTIONS	BY	CH'D	CCO#
2	05/18/09	TRAVELER RAIL MODIFICATIONS	MN	NV	2450
1	08/04/06	TRAVELER RAILS	MN	NV	24

REVISIONS

R. Valizadeh/V. Toan/Y.L./W.L./F.C.
DESIGN OVERSIGHT
SIGN OFF DATE 05/18/09

	BY	CHECKED
DESIGN	J. Otter	M. Nader
DETAILS	J. Otter	N. Vo
QUANTITIES	J. Otter	J. Leventini

PREPARED FOR THE STATE OF CALIFORNIA DEPARTMENT OF TRANSPORTATION

R. Manzanarez
PROJECT ENGINEER

BRIDGE NO. 34-0006L/R
KILOMETER POST 13.2/13.9

SAN FRANCISCO OAKLAND BAY BRIDGE
EAST SPAN SEISMIC SAFETY PROJECT
SELF-ANCHORED SUSPENSION BRIDGE (SUPERSTRUCTURE & TOWER)

SAS-EB TRAVELER OPERATING RANGES-07

Rev. Date: 5-18-98

ORIGINAL SCALE IN MILLIMETERS FOR REDUCED PLANS 0 10 20 30 40 50 60 70 80 90 100

CU 04
EA 0120F1

DISREGARD PRINTS BEARING EARLIER REVISION DATES

REVISION DATES (PRELIMINARY STAGE ONLY) 04/08/02 04/15/02 07/01/02 12/19/02

SHEET 598R2 OF

FILE -> I:\bb\04-012001\sas\contract plans and cco\cco\cco#2450\2-revision 05-18-09\dgn\aktrv010.dgn

100% PS&E

DATE PLOTTED => 19 MAY 2009 TIME PLOTTED => 15:48:17

USERNAME => dwinrow

DIST.	COUNTY	ROUTE	KILOMETER POST TOTAL PROJECT	SHEET NO.	TOTAL SHEETS
04	SF	80	13.2/13.9	1016R2	1204

REGISTERED ENGINEER - CIVIL

12-6-04

PLANS APPROVAL DATE

REGISTERED PROFESSIONAL ENGINEER Marwan N. Nader No. C 054426 Exp. 12/31/09 CIVIL STATE OF CALIFORNIA

The State of California or its officers or agents shall not be responsible for the accuracy or completeness of electronic copies of this plan sheet.

T.Y. LIN / MOFFATT & NICHOL
825 BATTERY STREET
SAN FRANCISCO, CA 94111

Caltrans now has a web site! To get to the web site, go to: http://www.dot.ca.gov

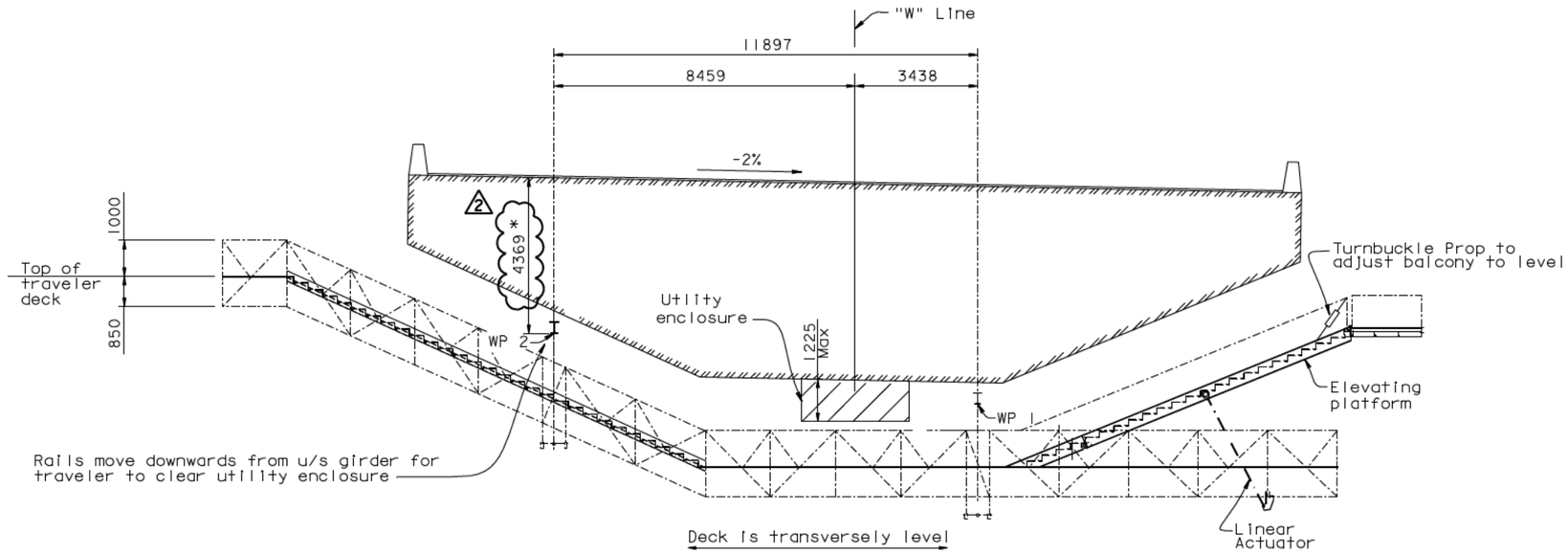

SAS-WB TRAVELER

CLOSE TO FACE OF PIER W2E

1:80

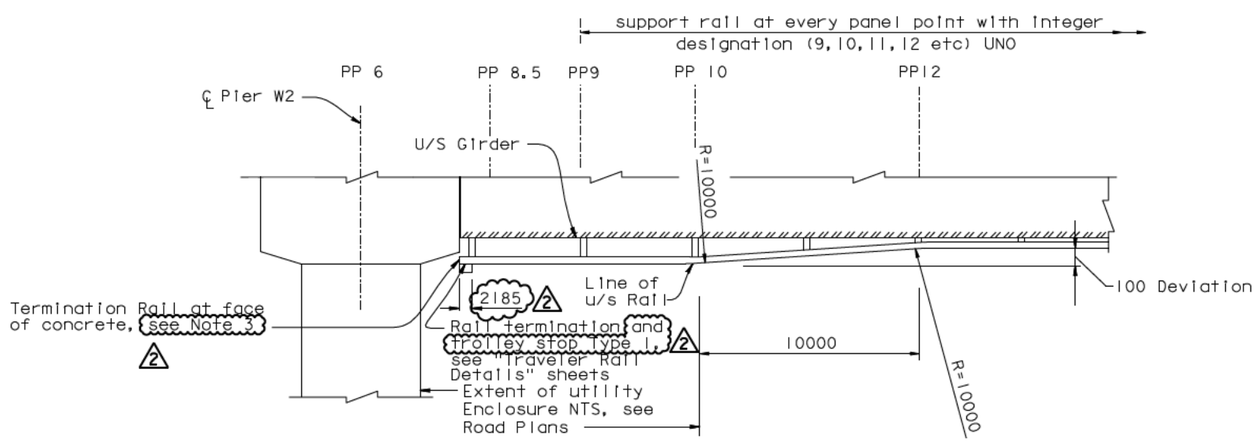

Increase Vertical dimension of Rail Supports to achieve this profile.

RAIL TRANSITION DETAIL

NTS

NOTES:

1. For general dimensions and notes see "SAS-EB Traveler Operating Ranges-03" sheet.
2. All layout dimensions are given truly horizontal and truly vertical.
3. For rail termination location see "Traveler Rail Details No. 13" sheet.

* Denotes vertical dimension from top of girder to u/s rail.

2 REVISION 2 SUPERSEDES REVISION 1

CONTRACT CHANGE ORDER NO. ____
SHEET ___ OF ___

REQUESTS FOR INFORMATION NOT ADDRESSED IN THIS CCO REMAIN IN FORCE

ALL DIMENSIONS ARE IN MILLIMETERS UNLESS OTHERWISE SHOWN

MARK	DATE	DESCRIPTIONS	BY	CH'D	CCO#
2	05/18/09	TRAVELER RAIL MODIFICATIONS	MN	NV	24S0
1	08/04/06	TRAVELER RAILS	MN	NV	24

REVISIONS

R. Valizadeh/V. Toan/Y. L./W.L./F.C.
DESIGN OVERSIGHT
SIGN OFF DATE 05/18/09

	BY	CHECKED
DESIGN	J. Otter	M. Nader
DETAILS	J. Otter	N. Vo
QUANTITIES	J. Otter	J. Leventini

PREPARED FOR THE STATE OF CALIFORNIA DEPARTMENT OF TRANSPORTATION

R. Manzanarez
PROJECT ENGINEER

BRIDGE NO. 34-0006L/R
KILOMETER POST 13.2/13.9

SAN FRANCISCO OAKLAND BAY BRIDGE
EAST SPAN SEISMIC SAFETY PROJECT
SELF-ANCHORED SUSPENSION BRIDGE
(SUPERSTRUCTURE & TOWER)

SAS-WB TRAVELER OPERATING RANGES-01

Rev. Date: 5-18-98

ORIGINAL SCALE IN MILLIMETERS FOR REDUCED PLANS 0 10 20 30 40 50 60 70 80 90 100

CU 04
EA 0120F1

DISREGARD PRINTS BEARING EARLIER REVISION DATES

REVISION DATES (PRELIMINARY STAGE ONLY) 04/08/02 04/15/02 07/09/02 12/19/02

SHEET 599R2 OF

FILE -> I:\bb\04-012001\sas\contract plans and cco\cco\cco#24s0\2-revision 05-18-09\dgn\aktrv011.dgn

100 % PS&E

USERNAME => dwinrow DATE PLOTTED => 19 MAY 2009 TIME PLOTTED => 15:50:12

DIST.	COUNTY	ROUTE	KILOMETER POST TOTAL PROJECT	SHEET NO.	TOTAL SHEETS
04	SF	80	13.2/13.9	1017R2	1204

REGISTERED ENGINEER - CIVIL

12-6-04
PLANS APPROVAL DATE

REGISTERED PROFESSIONAL ENGINEER Marwan N. Nader No. C 054426 Exp. 12/31/09 CIVIL STATE OF CALIFORNIA

The State of California or its officers or agents shall not be responsible for the accuracy or completeness of electronic copies of this plan sheet.

T.Y. LIN / MOFFATT & NICHOL
825 BATTERY STREET
SAN FRANCISCO, CA 94111

Caltrans now has a web site! To get to the web site, go to: http://www.dot.ca.gov

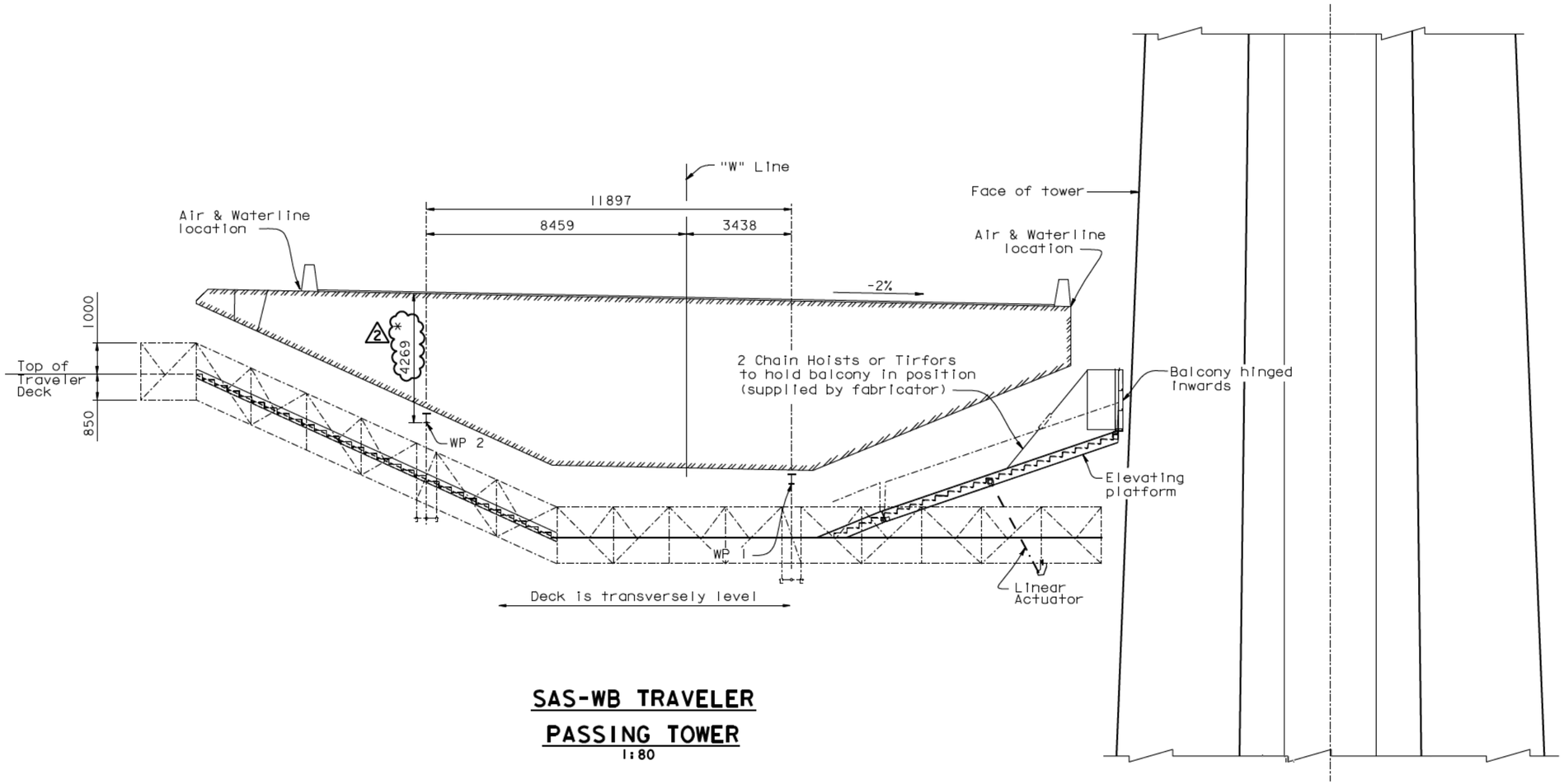

SAS-WB TRAVELER PASSING TOWER

1:80

NOTES:

1. For general dimensions and notes see "SAS-WB Traveler Operating Ranges - 03" sheet.
2. All layout dimensions are given truly horizontal and truly vertical.

* Denotes vertical dimension from top of girder to u/s rail.

2 REVISION 2 SUPERSEDES REVISION 1

CONTRACT CHANGE ORDER NO. ____
SHEET ___ OF ___

REQUESTS FOR INFORMATION NOT ADDRESSED IN THIS CCO REMAIN IN FORCE

ALL DIMENSIONS ARE IN MILLIMETERS UNLESS OTHERWISE SHOWN

MARK	DATE	DESCRIPTIONS	BY	CH'D	CCO#
2	05/18/09	TRAVELER RAIL MODIFICATIONS	MN	NV	24S0
1	08/04/06	TRAVELER RAILS	MN	NV	24

REVISIONS

R. Valizadeh/V. Toan/Y. L./W.L./F.C.
DESIGN OVERSIGHT
Roya Valizadeh / Vong Toan / Y. Lin
SIGN OFF DATE 05/18/09

	BY	CHECKED
DESIGN	J. Otter	M. Nader
DETAILS	J. Otter	N. Vo
QUANTITIES	J. Otter	J. Leventini

PREPARED FOR THE STATE OF CALIFORNIA DEPARTMENT OF TRANSPORTATION

R. Manzanarez
PROJECT ENGINEER

BRIDGE NO. 34-0006L/R
KILOMETER POST 13.2/13.9

SAN FRANCISCO OAKLAND BAY BRIDGE
EAST SPAN SEISMIC SAFETY PROJECT
SELF-ANCHORED SUSPENSION BRIDGE
(SUPERSTRUCTURE & TOWER)

SAS-WB TRAVELER OPERATING RANGES-02

Rev. Date: 5-18-98

ORIGINAL SCALE IN MILLIMETERS FOR REDUCED PLANS 0 10 20 30 40 50 60 70 80 90 100

CU 04
EA 0120F1

DISREGARD PRINTS BEARING EARLIER REVISION DATES

REVISION DATES (PRELIMINARY STAGE ONLY): 04/08/02 04/15/02 07/01/02 12/19/02

SHEET 600R2 OF

FILE -> I:\bb\04-012001\sas\contract plans and cco\cco\cco*24s0\2-revision 05-18-09\dgn\aktrv012.dgn

100 % PS&E

USERNAME => dwinrow DATE PLOTTED => 19 MAY 2009 TIME PLOTTED => 15:11:17

DIST.	COUNTY	ROUTE	KILOMETER POST TOTAL PROJECT	SHEET NO.	TOTAL SHEETS
04	SF	80	13.2/13.9	1018R3	1204

Caltrans Metric

REGISTERED ENGINEER - CIVIL

12-6-04
PLANS APPROVAL DATE

REGISTERED PROFESSIONAL ENGINEER Marwan N. Nader No. C 054426 Exp. 12/31/09 CIVIL STATE OF CALIFORNIA

The State of California or its officers or agents shall not be responsible for the accuracy or completeness of electronic copies of this plan sheet.

T.Y. LIN / MOFFATT & NICHOL
825 BATTERY STREET
SAN FRANCISCO, CA 94111

Caltrans now has a web site! To get to the web site, go to: http://www.dot.ca.gov

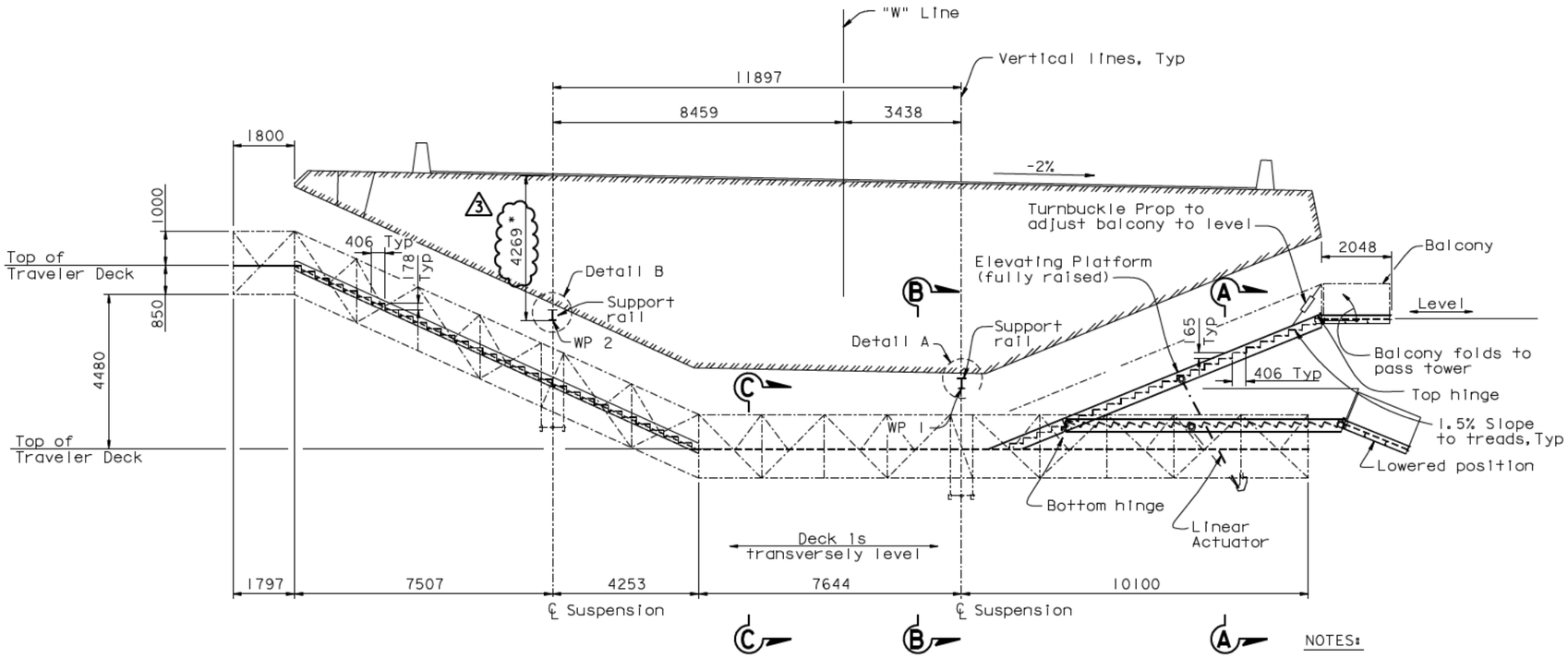

SAS-WB TRAVELER
CONTROLLING DIMENSIONS AT TYP SECTION
1:80

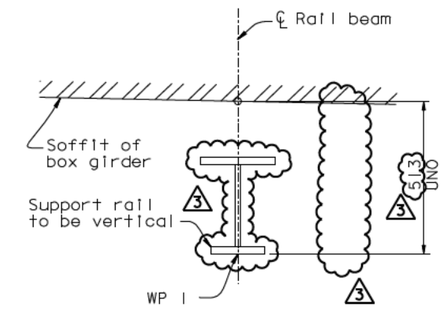

WP 1 Definition

DETAIL A
1:10

NOTES:

1. For rail details and rail mounts see "Traveler Rail Details" sheets.
2. Support rails at panel points such that the rail span does not exceed 5300 mm.
3. Use these drawings to locate rail positions.
4. All layout dimensions are given truly horizontal and truly vertical.

* Denotes vertical dimension from top of girder to u/s rail.

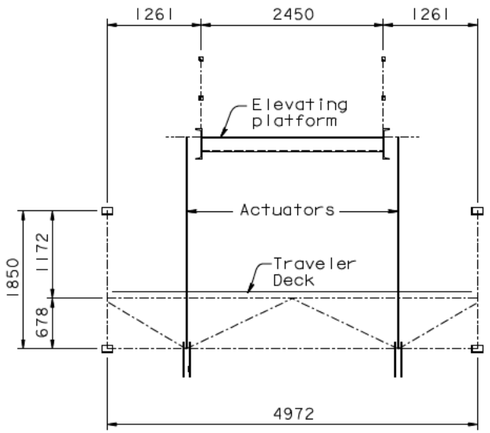

SECTION A-A

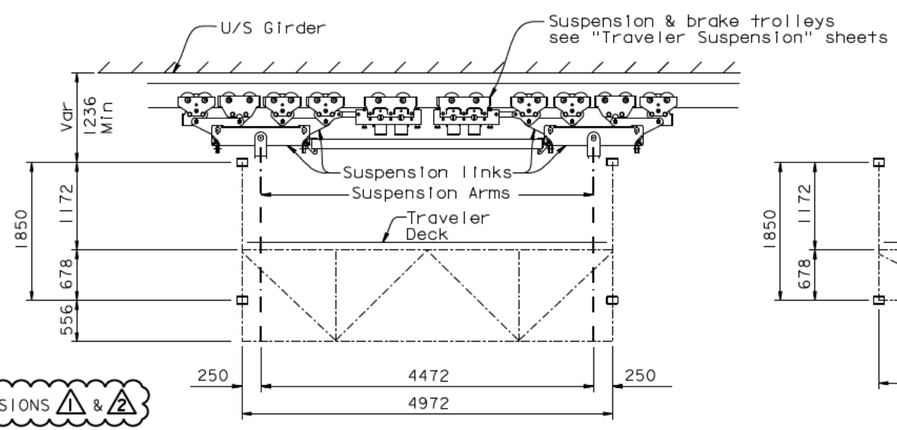

SECTION B-B

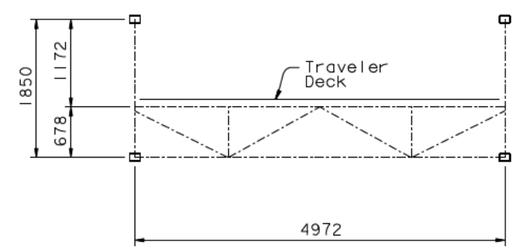

SECTION C-C

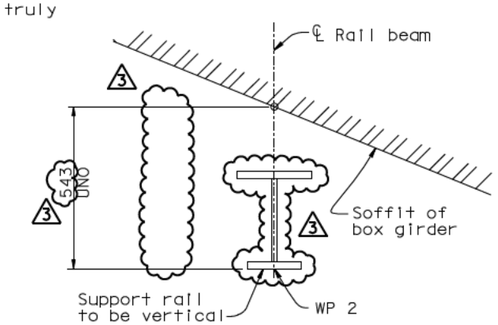

WP 2 Definition

DETAIL B
1:10

SCHEMATIC CROSS SECTIONS
1:40

ALL DIMENSIONS ARE IN MILLIMETERS UNLESS OTHERWISE SHOWN

REVISION 3 SUPERSEDES REVISIONS 1 & 2

CONTRACT CHANGE ORDER NO. ____
SHEET ___ OF ___

REQUESTS FOR INFORMATION NOT ADDRESSED IN THIS CCO REMAIN IN FORCE

MARK	DATE	DESCRIPTIONS	BY	CH'D	CCO#
3	05/18/09	TRAVELER RAIL MODIFICATIONS	MN	NV	2450
2	07/20/07	RAIL CHANGE & MISCELLANEOUS DETAILS	MN	NV	24
1	08/04/06	TRAVELER RAILS	MN	NV	24

REVISIONS

R. Vallizadeh/V. Toan/Y.L./W.L./F.C.
DESIGN OVERSIGHT
SIGN OFF DATE 05/18/09

Rev. Date: 5-18-98

	BY	CHECKED
DESIGN	J. Otter	M. Nader
DETAILS	J. Otter	N. Vo
QUANTITIES	J. Otter	J. Leventini

PREPARED FOR THE STATE OF CALIFORNIA DEPARTMENT OF TRANSPORTATION

R. Manzanarez
PROJECT ENGINEER

CU 04
EA 0120F1

BRIDGE NO. 34-0006L/R
KILOMETER POST 13.2/13.9

DISREGARD PRINTS BEARING EARLIER REVISION DATES

REVISION DATES (PRELIMINARY STAGE ONLY): 04/08/02 04/15/02 07/01/02 12/19/02

SHEET 60 OF 1R3

SAN FRANCISCO OAKLAND BAY BRIDGE
EAST SPAN SEISMIC SAFETY PROJECT
SELF-ANCHORED SUSPENSION BRIDGE
(SUPERSTRUCTURE & TOWER)

SAS-WB TRAVELER OPERATING RANGES-03

ORIGINAL SCALE IN MILLIMETERS FOR REDUCED PLANS 0 10 20 30 40 50 60 70 80 90 100

FILE -> I:\bb\04-012001\sas\contract plans and cco\cco\cco#2450\2-revision 05-18-09\dgn\aktrv013.dgn

100 % PS&E

USERNAME => clwinrow DATE PLOTTED => 19 MAY 2009 TIME PLOTTED => 15:52:38

DIST.	COUNTY	ROUTE	KILOMETER POST TOTAL PROJECT	SHEET NO.	TOTAL SHEETS
04	SF	80	13.2/13.9	1019R2	1204

REGISTERED ENGINEER - CIVIL

12-6-04
PLANS APPROVAL DATE

REGISTERED PROFESSIONAL ENGINEER Marwan N. Nader No. C 054426 Exp. 12/31/09 CIVIL STATE OF CALIFORNIA

The State of California or its officers or agents shall not be responsible for the accuracy or completeness of electronic copies of this plan sheet.

T.Y. LIN / MOFFATT & NICHOL
825 BATTERY STREET
SAN FRANCISCO, CA 94111

Caltrans now has a web site! To get to the web site, go to: http://www.dot.ca.gov

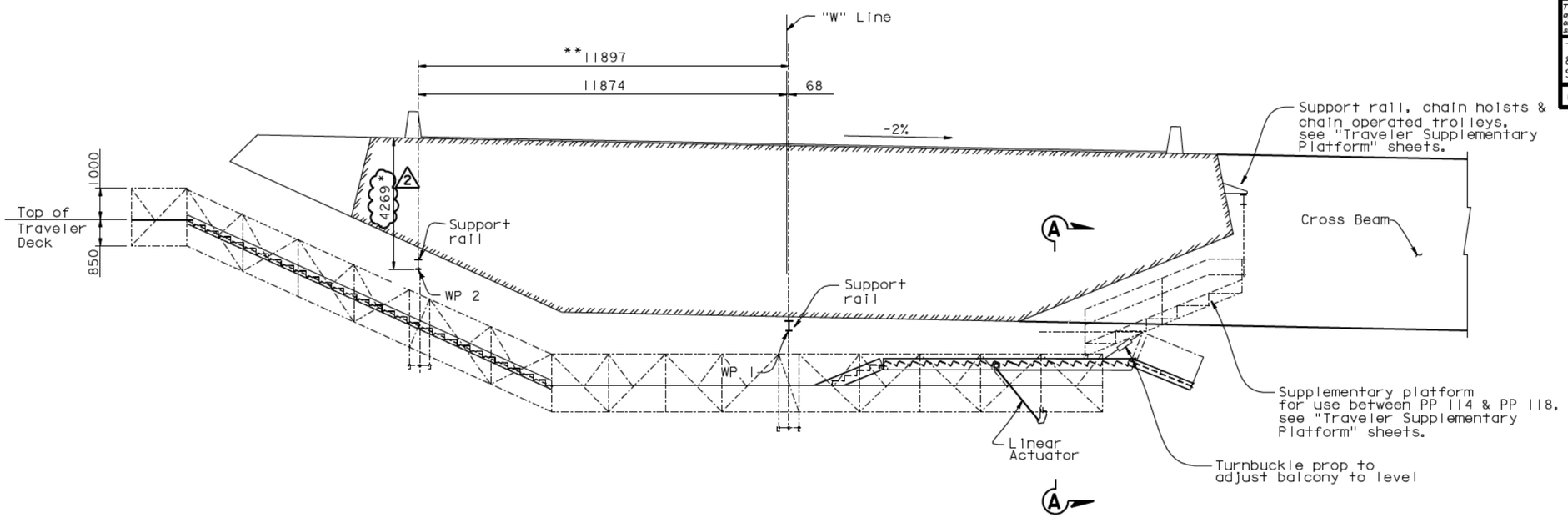

SAS-WB TRAVELER AT PP 118

1:80

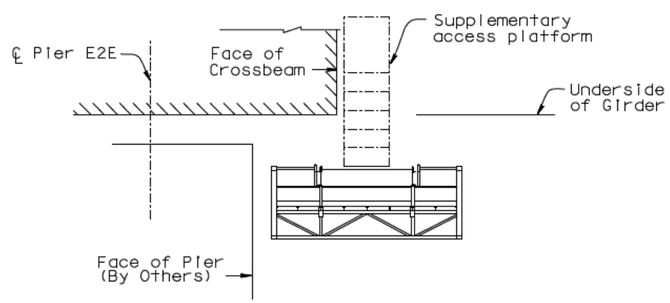

SECTION A-A

NOTES:

1. For general dimensions and notes see "SAS-WB Traveler Operating Range - 03" sheet.
2. All layout dimensions are given truly horizontal and truly vertical.

* Denotes vertical dimension from top of girder to u/s rail.

** Denotes Gauge, see "SAS-WB Traveler Operating Ranges - 03" sheet.

2 REVISION 2 SUPERSEDES REVISION 1

CONTRACT CHANGE ORDER NO. ____
SHEET ___ OF ___

REQUESTS FOR INFORMATION NOT ADDRESSED IN THIS CCO REMAIN IN FORCE

ALL DIMENSIONS ARE IN MILLIMETERS UNLESS OTHERWISE SHOWN

MARK	DATE	DESCRIPTIONS	BY	CH'D	CCO#
2	06/05/09	TRAVELER RAIL MODIFICATIONS	MN	NV	24S0
1	08/04/06	TRAVELER RAILS	MN	NV	24

REVISIONS

R. Valizadeh/V. Toan/Y.L./W.L./F.C.
DESIGN OVERSIGHT
SIGN OFF DATE 06/09/09

DESIGN BY J. Otter CHECKED M. Nader
DETAILS BY J. Otter CHECKED N. Vo
QUANTITIES BY J. Otter CHECKED J. Leventini

PREPARED FOR THE STATE OF CALIFORNIA DEPARTMENT OF TRANSPORTATION

R. Manzanarez
PROJECT ENGINEER

BRIDGE NO. 34-0006L/R
KILOMETER POST 13.2/13.9

SAN FRANCISCO OAKLAND BAY BRIDGE
EAST SPAN SEISMIC SAFETY PROJECT
SELF-ANCHORED SUSPENSION BRIDGE
(SUPERSTRUCTURE & TOWER)

SAS-WB TRAVELER OPERATING RANGES-04

Rev. Date: 5-18-98

ORIGINAL SCALE IN MILLIMETERS FOR REDUCED PLANS 0 10 20 30 40 50 60 70 80 90 100

CU 04
EA 0120F1

DISREGARD PRINTS BEARING EARLIER REVISION DATES

REVISION DATES (PRELIMINARY STAGE ONLY) 04/08/02 04/25/02 07/01/02 12/19/02

SHEET 602R2 OF

FILE -> I:\bb\04-012001\sas\contract plans and cco\cco\cco#24s0\3-update 06-05-09\dgn\aktrv014.dgn

100 % PS&E

USERNAME => dwinrow DATE PLOTTED => 10 JUN 2009 TIME PLOTTED => 15:51:17

DIST.	COUNTY	ROUTE	KILOMETER POST TOTAL PROJECT	SHEET NO.	TOTAL SHEETS
04	SF	80	13.2/13.9	1020R2	1204

REGISTERED ENGINEER - CIVIL

12-6-04
PLANS APPROVAL DATE

REGISTERED PROFESSIONAL ENGINEER Marwan N. Nader No. C 054426 Exp. 12/31/09 CIVIL STATE OF CALIFORNIA

The State of California or its officers or agents shall not be responsible for the accuracy or completeness of electronic copies of this plan sheet.

T.Y. LIN / MOFFATT & NICHOL
825 BATTERY STREET
SAN FRANCISCO, CA 94111

Caltrans now has a web site! To get to the web site, go to: http://www.dot.ca.gov

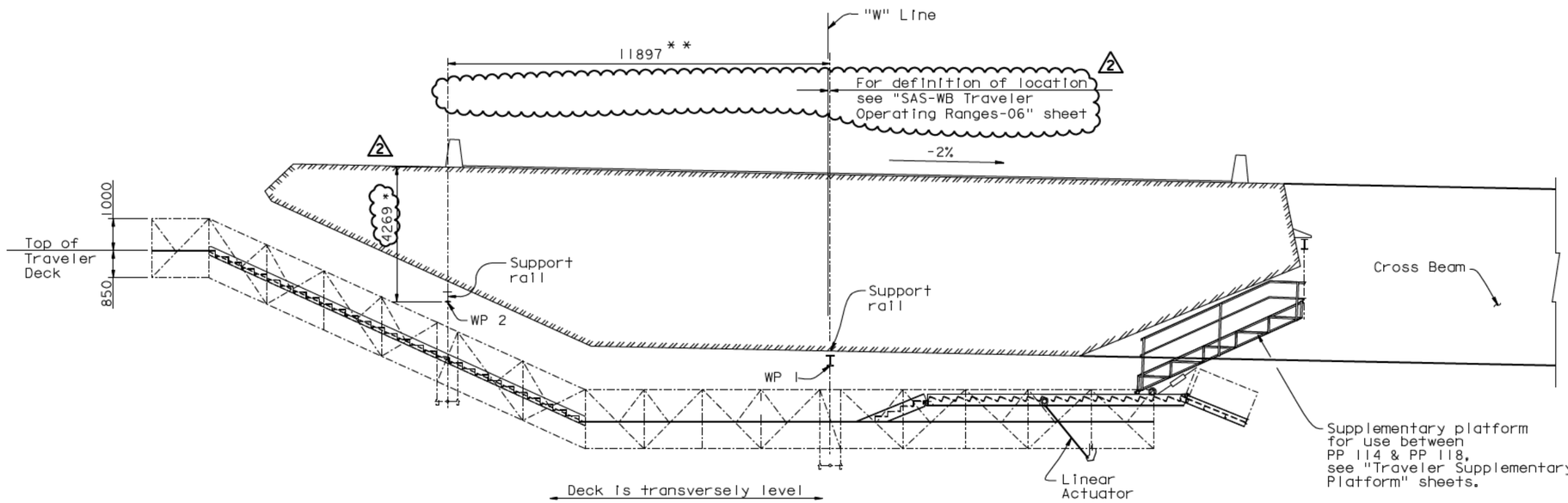

NOTES:

1. For general dimensions and notes see "SAS-WB Traveler Operating Range - 03" sheet.
2. All layout dimensions are given truly horizontal and truly vertical.

* Denotes vertical dimension from top of girder to u/s rail.

* * Denotes Gage, see "SAS-WB Traveler Operating Ranges - 03" sheet.

SAS-WB TRAVELER
AT LIMIT OF TRAVELER (FACE OF PIER E2W)

2 REVISION 2 SUPERSEDES REVISION 1

CONTRACT CHANGE ORDER NO. ____
SHEET ___ OF ___

REQUESTS FOR INFORMATION NOT ADDRESSED IN THIS CCO REMAIN IN FORCE

ALL DIMENSIONS ARE IN MILLIMETERS UNLESS OTHERWISE SHOWN

MARK	DATE	DESCRIPTIONS	BY	CH'D	CCO#
2	06/05/09	TRAVELER RAIL MODIFICATIONS	MN	NV	24S0
1	08/04/06	TRAVELER RAILS	MN	NV	24

REVISIONS

R. Valizadeh/V. Toan/Y.L./W.L./F.C.
DESIGN OVERSIGHT
Roya Valizadeh / Vong Toan / Y. Liu
SIGN OFF DATE 06/09/09

DESIGN BY J. Otter CHECKED M. Nader
DETAILS BY J. Otter CHECKED N. Vo
QUANTITIES BY J. Otter CHECKED J. Leventini

PREPARED FOR THE STATE OF CALIFORNIA DEPARTMENT OF TRANSPORTATION

R. Manzanarez
PROJECT ENGINEER

BRIDGE NO. 34-0006L/R
KILOMETER POST 13.2/13.9

SAN FRANCISCO OAKLAND BAY BRIDGE
EAST SPAN SEISMIC SAFETY PROJECT
SELF-ANCHORED SUSPENSION BRIDGE
(SUPERSTRUCTURE & TOWER)

SAS-WB TRAVELER OPERATING RANGES-05

Rev. Date: 5-18-98

ORIGINAL SCALE IN MILLIMETERS FOR REDUCED PLANS 0 10 20 30 40 50 60 70 80 90 100

CU 04
EA 0120F1

DISREGARD PRINTS BEARING EARLIER REVISION DATES

REVISION DATES (PRELIMINARY STAGE ONLY) 04/08/02 04/15/02 07/09/02 12/19/02

SHEET 603R2 OF

FILE -> I:\bb\04-012001\sas\contract plans and cco\cco\cco#24s0\3-update 06-05-09\dgn\aktrv015.dgn

100 % PS&E

USERNAME => dwinrow DATE PLOTTED => 10 JUN 2009 TIME PLOTTED => 15:52:38

DIST.	COUNTY	ROUTE	KILOMETER POST TOTAL PROJECT	SHEET NO.	TOTAL SHEETS
04	SF	80	13.2/13.9	102IR2	1204

REGISTERED ENGINEER - CIVIL

12-6-04
PLANS APPROVAL DATE

REGISTERED PROFESSIONAL ENGINEER Marwan N. Nader No. C 054426 Exp. 12/31/09 CIVIL STATE OF CALIFORNIA

The State of California or its officers or agents shall not be responsible for the accuracy or completeness of electronic copies of this plan sheet.

T.Y. LIN / MOFFATT & NICHOL
825 BATTERY STREET
SAN FRANCISCO, CA 94111

Caltrans now has a web site! To get to the web site, go to: http://www.dot.ca.gov

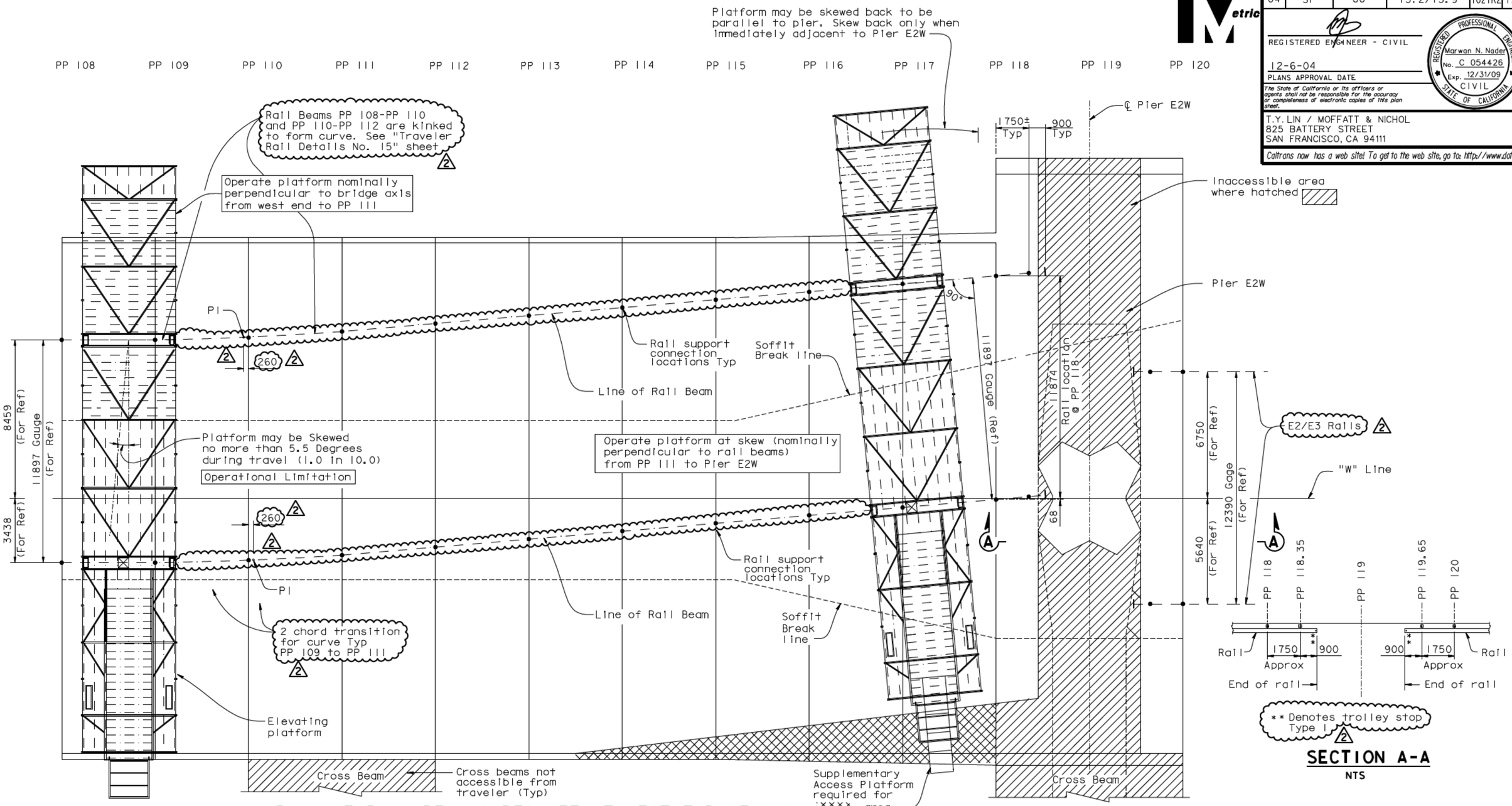

SECTION A-A
NTS

PLAN OF RAIL BEAM SIDESHIFT AT WEST END OF SAS
1:100

NOTES:
1. For supplementary access platform, details, see "Traveler Supplementary Platform" sheets.

REVISION 2 SUPERSEDES REVISION 1

CONTRACT CHANGE ORDER NO. ____
SHEET ___ OF ___

REQUESTS FOR INFORMATION NOT ADDRESSED IN THIS CCO REMAIN IN FORCE

ALL DIMENSIONS ARE IN MILLIMETERS UNLESS OTHERWISE SHOWN

MARK	DATE	DESCRIPTIONS	BY	CH'D	CCO#
2	05/18/09	TRAVELER RAIL MODIFICATIONS	MN	NV	24S0
1	08/04/06	TRAVELER RAILS	MN	NV	24

REVISIONS

R. Valizadeh/V. Toan/Y.L./W.L./F.C.
DESIGN OVERSIGHT
SIGN OFF DATE 05/18/09

DESIGN BY J. Otter CHECKED M. Nader
DETAILS BY J. Otter CHECKED N. Vo
QUANTITIES BY J. Otter CHECKED J. Leventini

PREPARED FOR THE STATE OF CALIFORNIA DEPARTMENT OF TRANSPORTATION

R. Manzanarez
PROJECT ENGINEER

BRIDGE NO. 34-0006L/R
KILOMETER POST 13.2/13.9

SAN FRANCISCO OAKLAND BAY BRIDGE
EAST SPAN SEISMIC SAFETY PROJECT
SELF-ANCHORED SUSPENSION BRIDGE
(SUPERSTRUCTURE & TOWER)

SAS-WB TRAVELER OPERATING RANGES-06

Rev. Date: 5-18-98

ORIGINAL SCALE IN MILLIMETERS FOR REDUCED PLANS 0 10 20 30 40 50 60 70 80 90 100

CU 04
EA 0120F1

DISREGARD PRINTS BEARING EARLIER REVISION DATES

REVISION DATES (PRELIMINARY STAGE ONLY) 04/08/02 04/15/02 07/09/02 12/13/02

SHEET 604R2 OF

FILE -> I:\bb\04-012001\sas\contract plans and cco\cco\cco#24s0\2-revision 05-18-09\dgn\aktrv016.dgn

100% PS&E

USERNAME => dwinrow DATE PLOTTED => 19 MAY 2009 TIME PLOTTED => 15:58:30

DIST.	COUNTY	ROUTE	KILOMETER POST TOTAL PROJECT	SHEET NO.	TOTAL SHEETS
04	SF	80	13.2/13.9	1022R2	1204

REGISTERED ENGINEER - CIVIL

12-6-04

PLANS APPROVAL DATE

REGISTERED PROFESSIONAL ENGINEER Marwan N. Nader No. C 054426 Exp. 12/31/09 CIVIL STATE OF CALIFORNIA

The State of California or its officers or agents shall not be responsible for the accuracy or completeness of electronic copies of this plan sheet.

T.Y. LIN / MOFFATT & NICHOL
825 BATTERY STREET
SAN FRANCISCO, CA 94111

Caltrans now has a web site! To get to the web site, go to: http://www.dot.ca.gov

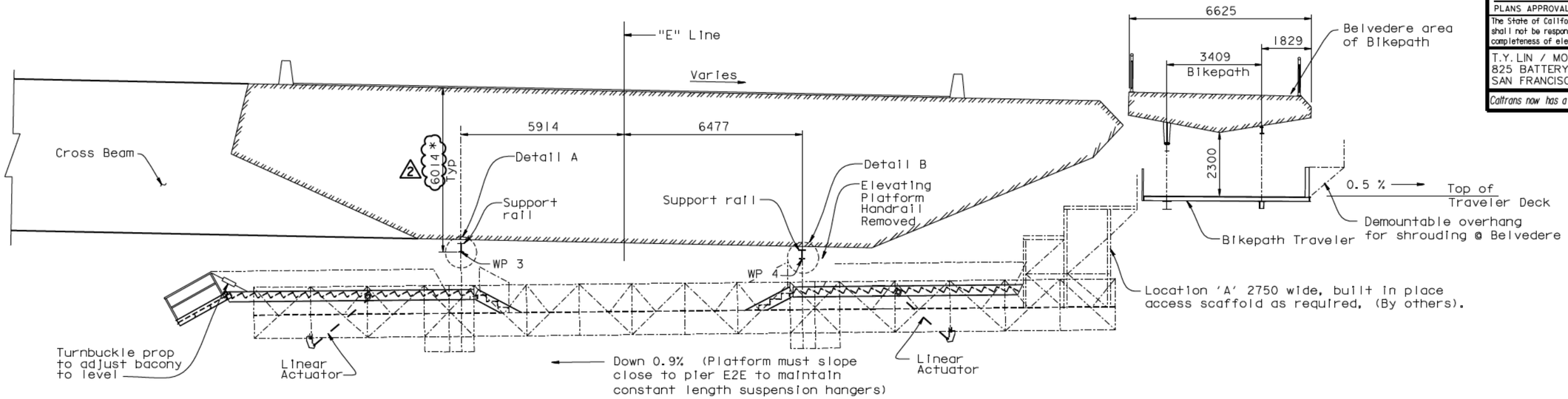

E2/E3 EB TRAVELER AT FACE OF PIER E2E

1:80

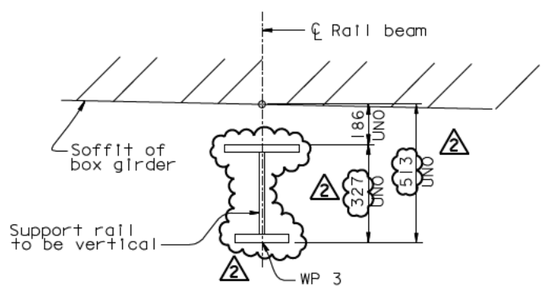

WP 3 Definition

DETAIL A

1:10

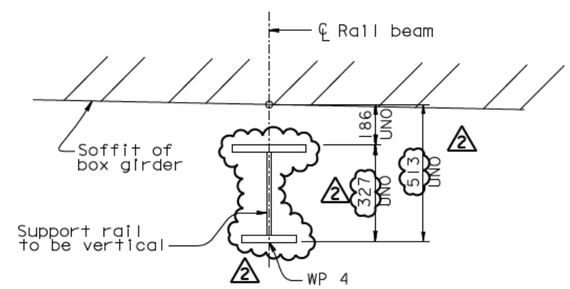

WP 4 Definition

DETAIL B

1:10

NOTES:

1. For general dimensions & notes see "E2/E3 EB Traveler Operating Ranges - 07" sheet.
2. All layout dimensions are given truly horizontal and truly vertical.
3. For Bikepath rail locations and gage see "E2/E3 Bikepath Traveler Rails" sheets.

* Denotes vertical dimension from top of girder to u/s rail.

Location 'A' built in place scaffold

Maximum scaffold weight = 500 kg
Maximum live load on scaffold = 500 kg

2 REVISION 2 SUPERSEDES REVISION 1

CONTRACT CHANGE ORDER NO. ____
SHEET ___ OF ___

REQUESTS FOR INFORMATION NOT ADDRESSED IN THIS CCO REMAIN IN FORCE

ALL DIMENSIONS ARE IN MILLIMETERS UNLESS OTHERWISE SHOWN

MARK	DATE	DESCRIPTIONS	BY	CH'D	CCO#
2	05/18/09	TRAVELER RAIL MODIFICATIONS	MN	NV	2450
1	08/04/06	TRAVELER RAILS	MN	NV	24

REVISIONS

R. Vallzadeh/V. Toan/Y.L./W.L./F.C.
DESIGN OVERSIGHT
SIGN OFF DATE 05/18/09

	BY	CHECKED
DESIGN	J. Otter	M. Nader
DETAILS	J. Otter	N. Vo
QUANTITIES	J. Otter	J. Leventini

PREPARED FOR THE STATE OF CALIFORNIA DEPARTMENT OF TRANSPORTATION

R. Manzanarez
PROJECT ENGINEER

BRIDGE NO. 34-0006L/R
KILOMETER POST 13.2/13.9

SAN FRANCISCO OAKLAND BAY BRIDGE
EAST SPAN SEISMIC SAFETY PROJECT
SELF-ANCHORED SUSPENSION BRIDGE
(SUPERSTRUCTURE & TOWER)

E2/E3 EB TRAVELER OPERATING RANGES-01

Rev. Date: 5-18-98

ORIGINAL SCALE IN MILLIMETERS FOR REDUCED PLANS 0 10 20 30 40 50 60 70 80 90 100

CU 04
EA 0120F1

DISREGARD PRINTS BEARING EARLIER REVISION DATES

REVISION DATES (PRELIMINARY STAGE ONLY) 04/25/02 07/24/02 12/19/02

SHEET 605R2 OF

FILE -> I:\bb\04-01200I\sas\contract plans and cco\cco\cco#24s0\2-revision 05-18-09\dgn\aktrv017.dgn

100 % PS&E

USERNAME => dwinrow DATE PLOTTED => 19 MAY 2009 TIME PLOTTED => 1515913I

DIST.	COUNTY	ROUTE	KILOMETER POST TOTAL PROJECT	SHEET NO.	TOTAL SHEETS
04	SF	80	13.2/13.9	1023R2	1204

REGISTERED ENGINEER - CIVIL

12-6-04

PLANS APPROVAL DATE

REGISTERED PROFESSIONAL ENGINEER Marwan N. Nader No. C 054426 Exp. 12/31/09 CIVIL STATE OF CALIFORNIA

The State of California or its officers or agents shall not be responsible for the accuracy or completeness of electronic copies of this plan sheet.

T.Y. LIN / MOFFATT & NICHOL
825 BATTERY STREET
SAN FRANCISCO, CA 94111

Caltrans now has a web site! To get to the web site, go to: http://www.dot.ca.gov

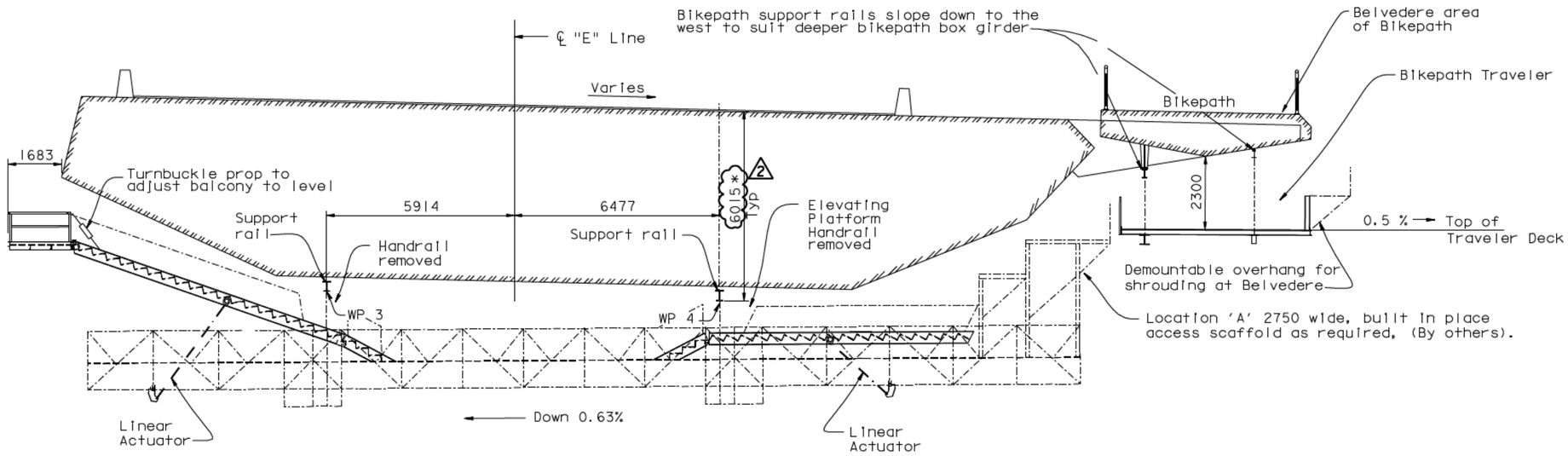

E2/E3 EB TRAVELER AT PP 121

1:80

NOTES:

1. For general dimensions & notes see "E2/E3 EB Traveler Operating Ranges - 07" sheet.
2. All layout dimensions are given truly horizontal and truly vertical.
3. For Bikepath rail locations and gage see "E2/E3 Bikepath Traveler Rails" sheets.

* Denotes vertical dimension from top of girder to u/s rail.

Location 'A' built in place scaffold

Maximum scaffold weight = 500 kg
Maximum live load on scaffold = 500 kg

2 REVISION 2 SUPERSEDES REVISION 1

CONTRACT CHANGE ORDER NO. ____
SHEET ___ OF ___

REQUESTS FOR INFORMATION NOT ADDRESSED IN THIS CCO REMAIN IN FORCE

ALL DIMENSIONS ARE IN MILLIMETERS UNLESS OTHERWISE SHOWN

MARK	DATE	DESCRIPTIONS	BY	CH'D	CCO#
2	05/18/09	TRAVELER RAIL MODIFICATIONS	MN	NV	24S0
1	08/04/06	TRAVELER RAILS	MN	NV	24

REVISIONS

R. Vallizadeh/V. Toan/Y.L./W.L./F.C.
DESIGN OVERSIGHT
SIGN OFF DATE 05/18/09

	BY	CHECKED
DESIGN	J. Otter	M. Nader
DETAILS	J. Otter	N. Vo
QUANTITIES	J. Otter	J. Leventini

PREPARED FOR THE STATE OF CALIFORNIA DEPARTMENT OF TRANSPORTATION

R. Manzanarez
PROJECT ENGINEER

BRIDGE NO. 34-0006L/R
KILOMETER POST 13.2/13.9

SAN FRANCISCO OAKLAND BAY BRIDGE
EAST SPAN SEISMIC SAFETY PROJECT
SELF-ANCHORED SUSPENSION BRIDGE
(SUPERSTRUCTURE & TOWER)

E2/E3 EB TRAVELER OPERATING RANGES-02

Rev. Date: 5-18-98

ORIGINAL SCALE IN MILLIMETERS FOR REDUCED PLANS 0 10 20 30 40 50 60 70 80 90 100

CU 04
EA 0120F1

DISREGARD PRINTS BEARING EARLIER REVISION DATES 04/18/02 07/09/02 12/19/02

SHEET 606R2 OF

FILE -> I:\bb\04-012001\sas\contract plans and cco\cco\cco#24s0\2-revision 05-18-09\dgn\aktrv018.dgn

100 % PS&E

USERNAME => dwinrow DATE PLOTTED => 19 MAY 2009 TIME PLOTTED => 16:00:44

DIST.	COUNTY	ROUTE	KILOMETER POST TOTAL PROJECT	SHEET NO.	TOTAL SHEETS
04	SF	80	13.2/13.9	1024R2	1204

REGISTERED ENGINEER - CIVIL

12-6-04

PLANS APPROVAL DATE

REGISTERED PROFESSIONAL ENGINEER Marwan N. Nader No. C 054426 Exp. 12/31/09 CIVIL STATE OF CALIFORNIA

The State of California or its officers or agents shall not be responsible for the accuracy or completeness of electronic copies of this plan sheet.

T.Y. LIN / MOFFATT & NICHOL
825 BATTERY STREET
SAN FRANCISCO, CA 94111

Caltrans now has a web site! To get to the web site, go to: http://www.dot.ca.gov

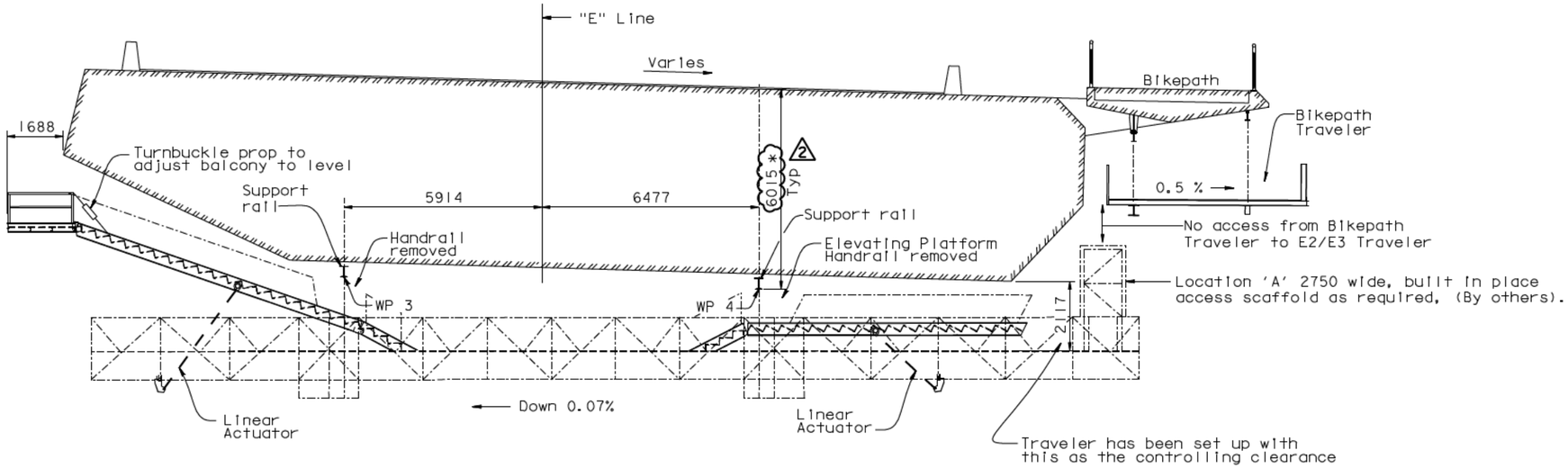

E2/E3 EB TRAVELER AT PP 124

1:80

NOTES:

1. For general dimensions & notes see "E2/E3 EB Traveler Operating Ranges - 07" sheet.
2. All layout dimensions are given truly horizontal and truly vertical.
3. For Bikepath rail locations and gage see "E2/E3 Bikepath Traveler Rails" sheets.

* Denotes vertical dimension from top of girder to u/s rail.

Location 'A' built in place scaffold

Maximum scaffold weight = 500 kg
Maximum live load on scaffold = 500 kg

2 REVISION 2 SUPERSEDES REVISION 1

CONTRACT CHANGE ORDER NO. ____
SHEET ___ OF ___

REQUESTS FOR INFORMATION NOT ADDRESSED IN THIS CCO REMAIN IN FORCE

MARK	DATE	DESCRIPTIONS	BY	CH'D	CCO#
2	05/18/09	TRAVELER RAIL MODIFICATIONS	MN	NV	24S0
1	08/04/06	TRAVELER RAILS	MN	NV	24

REVISIONS

R. Valizadeh/V. Toan/Y.L./W.L./F.C.
DESIGN OVERSIGHT
SIGN OFF DATE 05/18/09

Rev. Date: 5-18-98

DESIGN BY J. Otter CHECKED M. Nader
DETAILS BY J. Otter CHECKED N. Vo
QUANTITIES BY J. Otter CHECKED J. Leventini

PREPARED FOR THE STATE OF CALIFORNIA DEPARTMENT OF TRANSPORTATION

R. Manzanarez
PROJECT ENGINEER

ALL DIMENSIONS ARE IN MILLIMETERS UNLESS OTHERWISE SHOWN

ORIGINAL SCALE IN MILLIMETERS FOR REDUCED PLANS 0 10 20 30 40 50 60 70 80 90 100

CU 04
EA 0120F1

BRIDGE NO. 34-0006L/R
KILOMETER POST 13.2/13.9

DISREGARD PRINTS BEARING EARLIER REVISION DATES

REVISION DATES (PRELIMINARY STAGE ONLY) 04/18/02 07/09/02 12/19/02

SHEET 607R2 OF

SAN FRANCISCO OAKLAND BAY BRIDGE
EAST SPAN SEISMIC SAFETY PROJECT
SELF-ANCHORED SUSPENSION BRIDGE
(SUPERSTRUCTURE & TOWER)

E2/E3 EB TRAVELER OPERATING RANGES-03

FILE -> I:\bb\04-012001\sas\contract plans and cco\cco\cco*24s0\2-revision 05-18-09\dgn\aktrv019.dgn

100 % PS&E

USERNAME -> dwinrow DATE PLOTTED => 19 MAY 2009 TIME PLOTTED => 16:02:26

DIST.	COUNTY	ROUTE	KILOMETER POST TOTAL PROJECT	SHEET NO.	TOTAL SHEETS
04	SF	80	13.2/13.9	1025R2	1204

REGISTERED ENGINEER - CIVIL

12-6-04

PLANS APPROVAL DATE

REGISTERED PROFESSIONAL ENGINEER Marwan N. Nader No. C 054426 Exp. 12/31/09 CIVIL STATE OF CALIFORNIA

The State of California or its officers or agents shall not be responsible for the accuracy or completeness of electronic copies of this plan sheet.

T.Y. LIN / MOFFATT & NICHOL
825 BATTERY STREET
SAN FRANCISCO, CA 94111

Caltrans now has a web site! To get to the web site, go to: http://www.dot.ca.gov

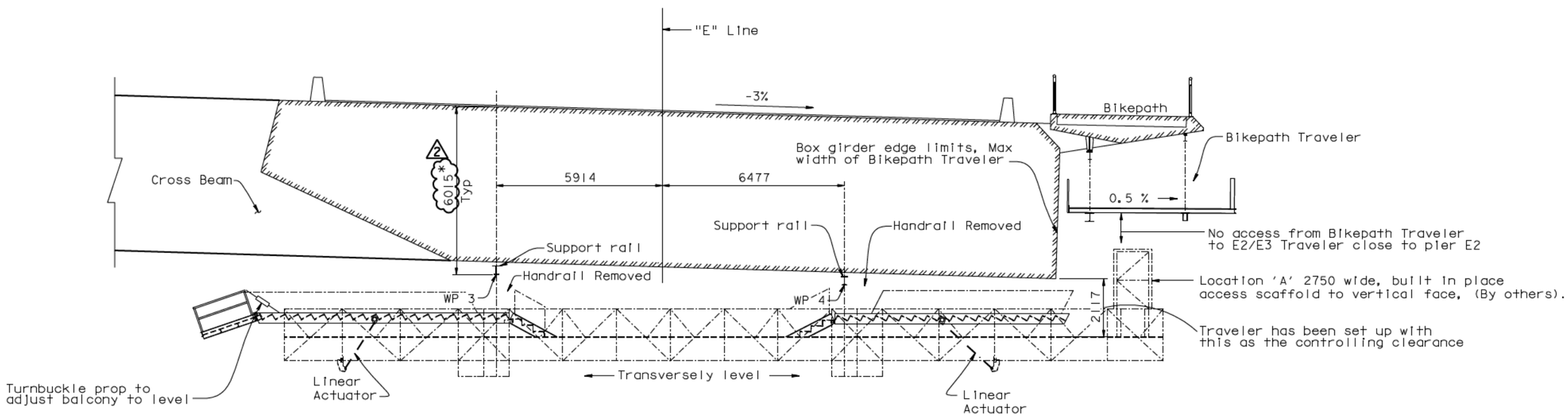

E2/E3 EB TRAVELER AT PP 127

1:80

NOTES:

1. For general dimensions & notes see "E2/E3 EB Traveler Operating Ranges - 07" sheet.
2. All layout dimensions are given truly horizontal and truly vertical.
3. For Bikepath rail locations and gage see "E2/E3 Bikepath Traveler Rails" sheets.

* Denotes vertical dimension from top of girder to u/s rail.

Location 'A' built in place scaffolde

Maximum scaffold weight = 500 kg
Maximum live load on scaffold = 500 kg

2 REVISION 2 SUPERSEDES REVISION 1

CONTRACT CHANGE ORDER NO. ____
SHEET ___ OF ___

REQUESTS FOR INFORMATION NOT ADDRESSED IN THIS CCO REMAIN IN FORCE

ALL DIMENSIONS ARE IN MILLIMETERS UNLESS OTHERWISE SHOWN

R. Valizadeh/V. Toan/Y.L./W.L./F.C.
DESIGN OVERSIGHT
Roya Valizadeh / Vong Toan / Y. Liu
SIGN OFF DATE 05/18/09

MARK	DATE	DESCRIPTIONS	BY	CH'D	CCO#
2	05/18/09	TRAVELER RAIL MODIFICATIONS	MN	NV	2450
1	08/04/06	TRAVELER RAILS	MN	NV	24

REVISIONS

	BY	CHECKED
DESIGN	J. Otter	M. Nader
DETAILS	J. Otter	N. Vo
QUANTITIES	J. Otter	J. Leventini

PREPARED FOR THE STATE OF CALIFORNIA DEPARTMENT OF TRANSPORTATION

R. Manzanarez
PROJECT ENGINEER

BRIDGE NO. 34-0006L/R
KILOMETER POST 13.2/13.9

SAN FRANCISCO OAKLAND BAY BRIDGE
EAST SPAN SEISMIC SAFETY PROJECT
SELF-ANCHORED SUSPENSION BRIDGE
(SUPERSTRUCTURE & TOWER)

E2/E3 EB TRAVELER OPERATING RANGES-04

Rev. Date: 5-18-98

ORIGINAL SCALE IN MILLIMETERS FOR REDUCED PLANS 0 10 20 30 40 50 60 70 80 90 100

CU 04
EA 0120F1

DISREGARD PRINTS BEARING EARLIER REVISION DATES 04/18/02 07/09/02 12/19/02

SHEET 608R2 OF

FILE -> I:\bb\04-012001\sas\contract plans and cco\cco\cco#2450\2-revision 05-18-09\dgn\aktrv020.dgn

100 % PS&E

USERNAME => dwinrow DATE PLOTTED => 19 MAY 2009 TIME PLOTTED => 16:03:29

DIST.	COUNTY	ROUTE	KILOMETER POST TOTAL PROJECT	SHEET NO.	TOTAL SHEETS
04	SF	80	13.2/13.9	1026R2	1204

REGISTERED ENGINEER - CIVIL

12-6-04
PLANS APPROVAL DATE

REGISTERED PROFESSIONAL ENGINEER Marwan N. Nader No. C 054426 Exp. 12/31/09 CIVIL STATE OF CALIFORNIA

The State of California or its officers or agents shall not be responsible for the accuracy or completeness of electronic copies of this plan sheet.

T.Y. LIN / MOFFATT & NICHOL
825 BATTERY STREET
SAN FRANCISCO, CA 94111

Caltrans now has a web site! To get to the web site, go to: http://www.dot.ca.gov

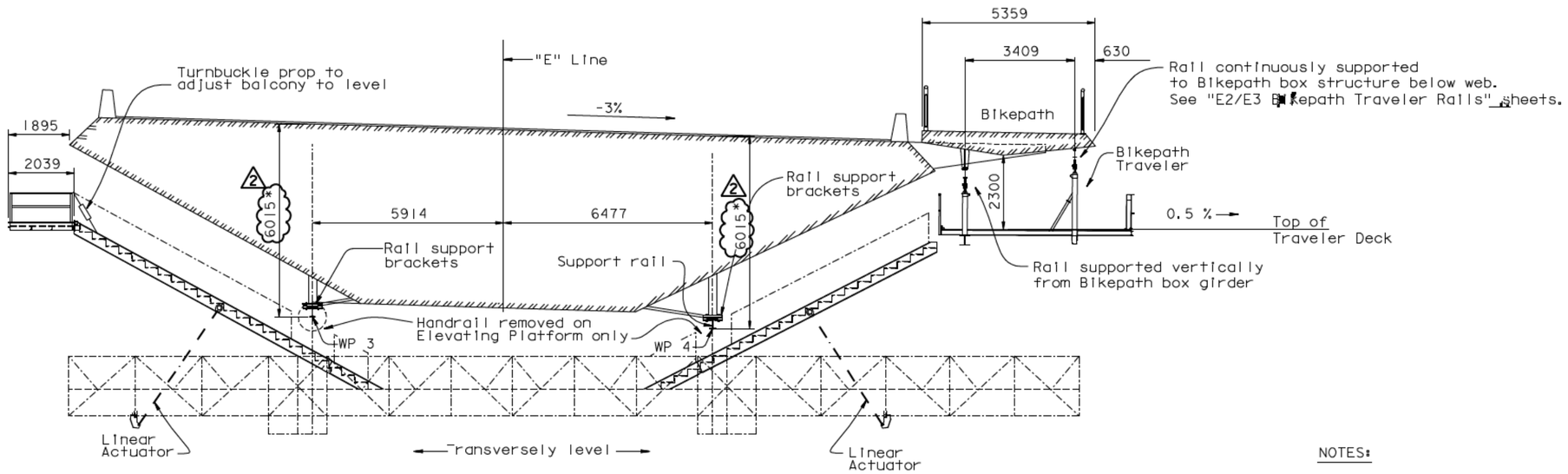

E2/E3 EB TRAVELER AT PP 128

1:80

NOTES:

1. For general dimensions & notes see "E2/E3 EB Traveler Operating Ranges - 07" sheet.
2. For rail details and rail mounts see "Traveler Rail Details" sheets.
3. Support rails at panel points such that the rail span does not exceed 5300 mm.
4. All layout dimensions are given truly horizontal and truly vertical.

* Denotes vertical dimension from top of girder to u/s rail.

2 REVISION 2 SUPERSEDES REVISION 1

CONTRACT CHANGE ORDER NO. ____
SHEET ___ OF ___

REQUESTS FOR INFORMATION NOT ADDRESSED IN THIS CCO REMAIN IN FORCE

ALL DIMENSIONS ARE IN MILLIMETERS UNLESS OTHERWISE SHOWN

MARK	DATE	DESCRIPTIONS	BY	CH'D	CCO#
2	05/18/09	TRAVELER RAIL MODIFICATIONS	MN	NV	2450
1	08/04/06	TRAVELER RAILS	MN	NV	24

REVISIONS

R. Vallizadeh/V. Toan/Y.L./W.L./F.C.
DESIGN OVERSIGHT
SIGN OFF DATE 05/18/09

	BY	CHECKED
DESIGN	J. Otter	M. Nader
DETAILS	J. Otter	N. Vo
QUANTITIES	J. Otter	J. Leventini

PREPARED FOR THE STATE OF CALIFORNIA DEPARTMENT OF TRANSPORTATION

R. Manzanarez
PROJECT ENGINEER

BRIDGE NO. 34-0006L/R
KILOMETER POST 13.2/13.9

SAN FRANCISCO OAKLAND BAY BRIDGE
EAST SPAN SEISMIC SAFETY PROJECT
SELF-ANCHORED SUSPENSION BRIDGE
(SUPERSTRUCTURE & TOWER)

E2/E3 EB TRAVELER OPERATING RANGES-05

Rev. Date: 5-18-98

ORIGINAL SCALE IN MILLIMETERS FOR REDUCED PLANS 0 10 20 30 40 50 60 70 80 90 100

CU 04
EA 0120F1

DISREGARD PRINTS BEARING EARLIER REVISION DATES

REVISION DATES (PRELIMINARY STAGE ONLY) 04/19/02 07/29/02 12/19/02

SHEET 609R2 OF

FILE -> I:\bb\04-01200I\sas\contract plans and cco\cco\cco#24s0\2-revision 05-18-09\dgn\aktrv021.dgn

100 % PS&E

USERNAME => dwinrow DATE PLOTTED => 19 MAY 2009 TIME PLOTTED => 16:04:41

DIST.	COUNTY	ROUTE	KILOMETER POST TOTAL PROJECT	SHEET NO.	TOTAL SHEETS
04	SF	80	13.2/13.9	1027R3	1204

REGISTERED ENGINEER - CIVIL

12-6-04
PLANS APPROVAL DATE

REGISTERED PROFESSIONAL ENGINEER Marwan N. Nader No. C 054426 Exp. 12/31/09 CIVIL STATE OF CALIFORNIA

The State of California or its officers or agents shall not be responsible for the accuracy or completeness of electronic copies of this plan sheet.

T.Y. LIN / MOFFATT & NICHOL
825 BATTERY STREET
SAN FRANCISCO, CA 94111

Caltrans now has a web site! To get to the web site, go to: http://www.dot.ca.gov

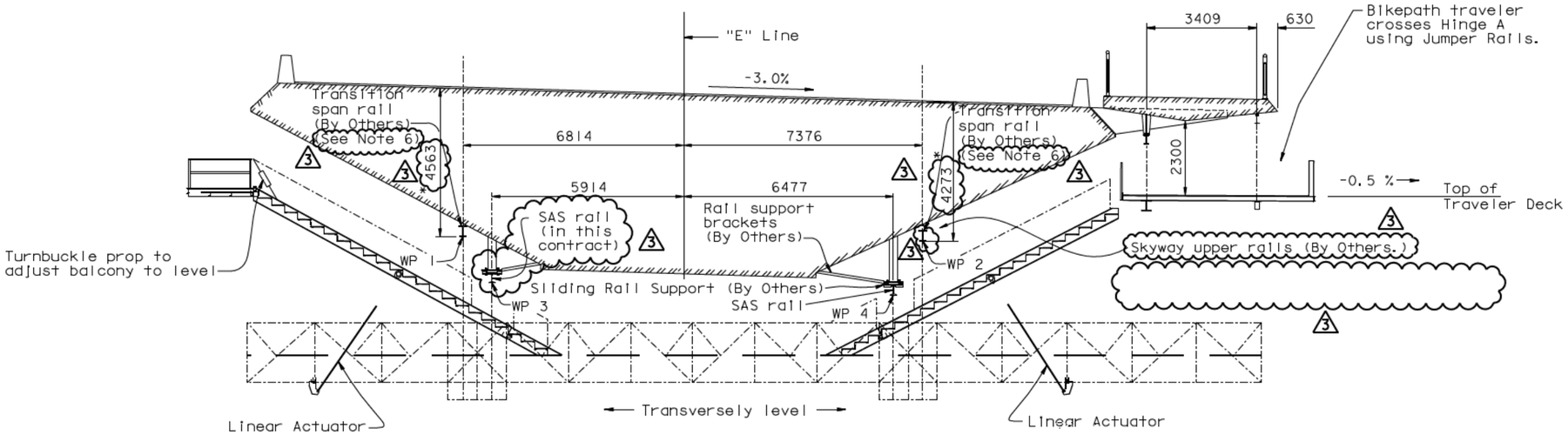

E2/E3 EB TRAVELER

IMMEDIATELY EAST OF HINGE A

1:80

This section applies for 9.1 m east of Hinge A Suspension is changed from Transition Span rails to SAS rails at this location.

3 SKYWAY STRUCTURE, RAIL SUPPORTS AND UPPER RAIL ON SKYWAY IS WORK DONE BY OTHERS (SEE CONTRACT No. 04-012024)

NOTES:

1. For general dimensions & notes see "E2/E3 EB Traveler Operating Ranges - 07" sheet.
2. E2/E3 EB Traveler Transition span (Skyway) rails, brackets & the mountings to support SAS rails to the Skyway structures are By Others. SAS rails are supplied and installed under this contract. See "Traveler Rail Details" sheets.
3. For rail details and rail mounts see "Traveler Rail Details" sheets.
4. Support rails at panel points such that the rail span does not exceed 5300 mm.
5. All layout dimensions are given truly horizontal and truly vertical.
6. 3 The Contractor shall replace the Skyway Traveler as-built upper rails. For replacement details, see "Skyway Traveler Rail Replacement Details No.1 to No.9" sheets.

* Denotes vertical dimension from top of girder to u/s rail.

BIKEPATH TRAVELER

1. Rails to east of Hinge A are to be supplied & installed By Others.
2. For details of rails crossing Hinge A see "Traveler Rail Details No.9" and "Traveler Rail Details No.10" sheets.

3 REVISION 3 SUPERSEDES REVISIONS 1 & 2

CONTRACT CHANGE ORDER NO. ____
SHEET ___ OF ___

REQUESTS FOR INFORMATION NOT ADDRESSED IN THIS CCO REMAIN IN FORCE

MARK	DATE	DESCRIPTIONS	BY	CH'D	CCO#
3	05/18/09	TRAVELER RAIL MODIFICATIONS	MN	NV	2450
2	07/20/07	RAIL CHANGE & MISCELLANEOUS DETAILS	MN	NV	24
1	08/04/06	TRAVELER RAILS	MN	NV	24

REVISIONS

R. Valizadeh/V. Toan/Y.L./W.L./F.C.
DESIGN OVERSIGHT
SIGN OFF DATE 05/18/09

Rev. Date: 5-18-98

	BY	CHECKED
DESIGN	J. Otter	M. Nader
DETAILS	J. Otter	N. Vo
QUANTITIES	J. Otter	J. Leventini

PREPARED FOR THE STATE OF CALIFORNIA DEPARTMENT OF TRANSPORTATION

ALL DIMENSIONS ARE IN MILLIMETERS UNLESS OTHERWISE SHOWN

R. Manzanarez
PROJECT ENGINEER

BRIDGE NO. 34-0006L/R
KILOMETER POST 13.2/13.9

SAN FRANCISCO OAKLAND BAY BRIDGE
EAST SPAN SEISMIC SAFETY PROJECT
SELF-ANCHORED SUSPENSION BRIDGE
(SUPERSTRUCTURE & TOWER)

E2/3 EB TRAVELER OPERATING RANGES-06

ORIGINAL SCALE IN MILLIMETERS FOR REDUCED PLANS 0 10 20 30 40 50 60 70 80 90 100

CU 04
EA 0120F1

DISREGARD PRINTS BEARING EARLIER REVISION DATES 04/18/02 07/09/02 12/19/02

REVISION DATES (PRELIMINARY STAGE ONLY)

SHEET 610R3 OF

FILE -> I:\bb\04-012001\sas\contract plans and cco\cco\cco#24s0\2-revision 05-18-09\dgn\aktrv022.dgn

100% PS&E

USERNAME => dwinrow DATE PLOTTED => 19 MAY 2009 TIME PLOTTED => 16:06:00

DIST.	COUNTY	ROUTE	KILOMETER POST TOTAL PROJECT	SHEET NO.	TOTAL SHEETS
04	SF	80	13.2/13.9	1028R3	1204

Caltrans Metric

REGISTERED ENGINEER - CIVIL

12-6-04
PLANS APPROVAL DATE

REGISTERED PROFESSIONAL ENGINEER Marwan N. Nader No. C 054426 Exp. 12/31/09 CIVIL STATE OF CALIFORNIA

The State of California or its officers or agents shall not be responsible for the accuracy or completeness of electronic copies of this plan sheet.

T.Y. LIN / MOFFATT & NICHOL
825 BATTERY STREET
SAN FRANCISCO, CA 94111

Caltrans now has a web site! To get to the web site, go to: http://www.dot.ca.gov

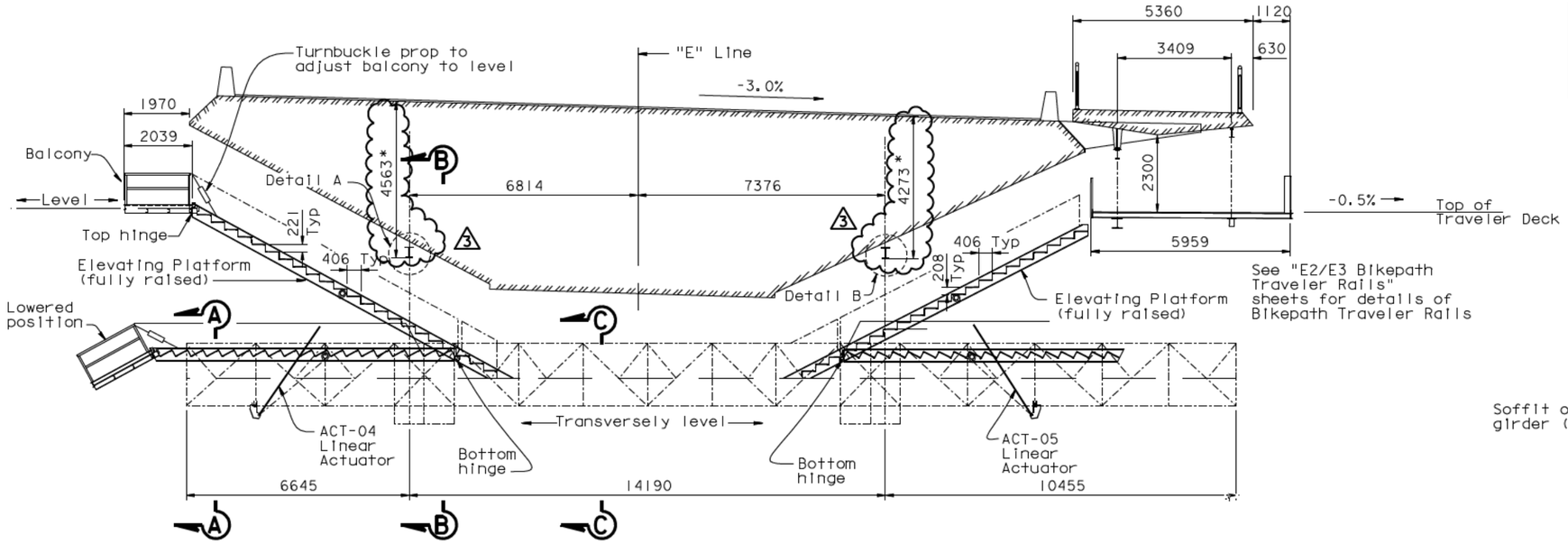

See "E2/E3 Bikepath Traveler Rails" sheets for details of Bikepath Traveler Rails

E2/E3 EB TRAVELER
TOWARDS WEST END OF TRANSITION SPAN
CONTROLLING DIMENSIONS
1:80

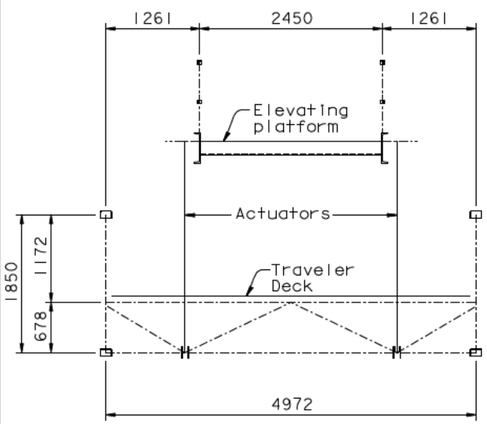

SECTION A-A

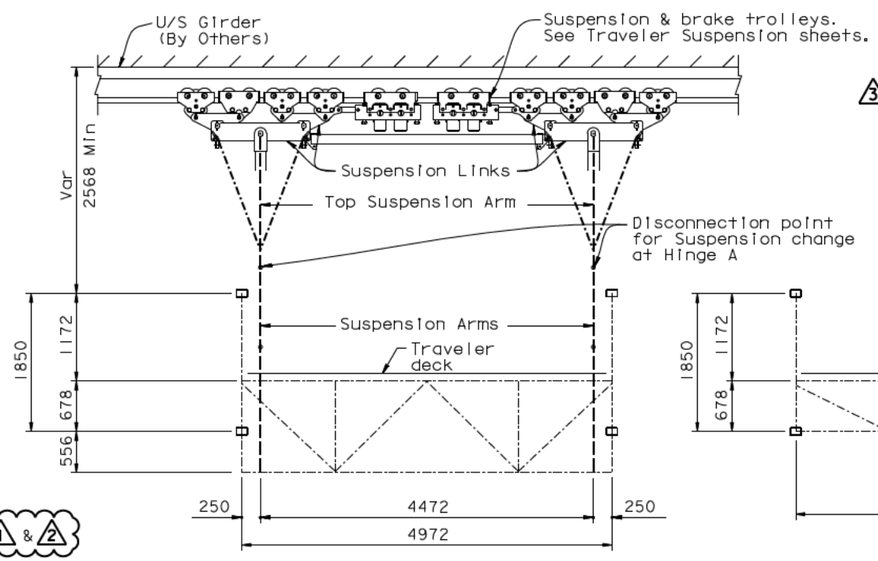

SECTION B-B

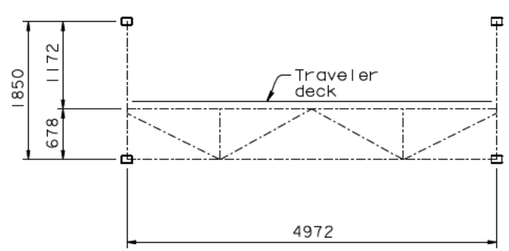

SECTION C-C

SCHEMATIC CROSS SECTIONS
1:40

NOTES:

1. For rail details and rail mounts see "Traveler Rail Details" sheets.
2. Support rails at panel points such that the rails span does not exceed 5300 mm.
3. All layout dimensions are given truly horizontal and truly vertical.
4. The Contractor shall remove the existing Skyway Traveler as-built upper rails. For replacement rail details, see "Skyway Traveler Rail Replacement Details No. 1 to No. 9" sheets.

* Denotes vertical dimension from top of girder to u/s rail.

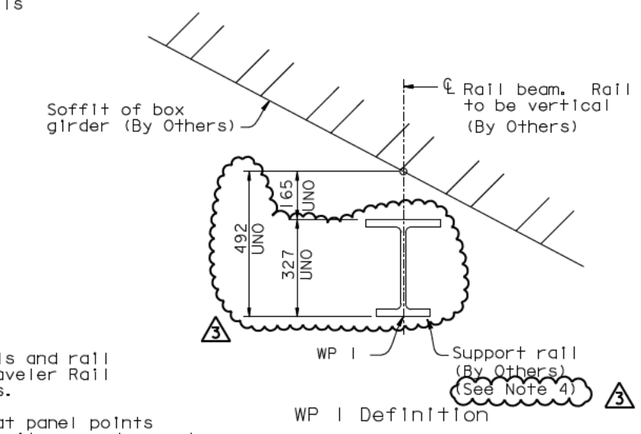

WP 1 Definition

DETAIL A
1:10

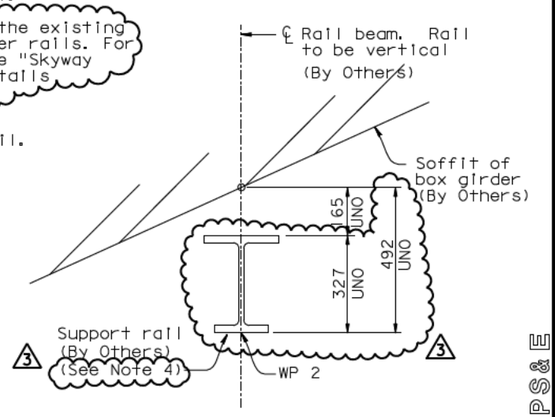

WP 2 Definition

DETAIL B
1:10

SKYWAY STRUCTURE, RAIL MOUNTS AND UPPER RAIL ON SKYWAY IS WORK DONE BY OTHERS (SEE CONTRACT No. 04-012024)

REVISION 3 SUPERSEDES REVISIONS 1 & 2

CONTRACT CHANGE ORDER NO. ____
SHEET ___ OF ___

REQUESTS FOR INFORMATION NOT ADDRESSED IN THIS CCO REMAIN IN FORCE

MARK	DATE	DESCRIPTIONS	BY	CH'D	CCO#
3	05/18/09	TRAVELER RAIL MODIFICATIONS	MN	NV	2450
2	07/20/07	RAIL CHANGE & MISCELLANEOUS DETAILS	MN	NV	24
1	08/04/06	TRAVELER RAILS	MN	NV	24

REVISIONS

R. Vallizadeh/V. Toan/Y.L./W.L./F.C.
DESIGN OVERSIGHT
SIGN OFF DATE 05/18/09

Rev. Date: 5-18-98

	BY	CHECKED
DESIGN	J. Otter	M. Nader
DETAILS	J. Otter	N. Vo
QUANTITIES	J. Otter	J. Leventini

PREPARED FOR THE STATE OF CALIFORNIA DEPARTMENT OF TRANSPORTATION

R. Manzanarez
PROJECT ENGINEER

ALL DIMENSIONS ARE IN MILLIMETERS UNLESS OTHERWISE SHOWN

BRIDGE NO. 34-0006L/R
KILOMETER POST 13.2/13.9

CU 04
EA 0120F1

ORIGINAL SCALE IN MILLIMETERS FOR REDUCED PLANS 0 10 20 30 40 50 60 70 80 90 100

DISREGARD PRINTS BEARING EARLIER REVISION DATES

REVISION DATES (PRELIMINARY STAGE ONLY) 04/18/02 07/20/02 12/19/02

SHEET 61 OF 1R3

SAN FRANCISCO OAKLAND BAY BRIDGE
EAST SPAN SEISMIC SAFETY PROJECT
SELF-ANCHORED SUSPENSION BRIDGE
(SUPERSTRUCTURE & TOWER)

E2/E3 EB TRAVELER OPERATING RANGES-07

FILE -> I:\bb\04-012001\sas\contract plans and cco\cco\cco#24s0\2-revision 05-18-09\dgn\aktrv023.dgn

100 % PS&E

USERNAME => dwinrow DATE PLOTTED => 19 MAY 2009 TIME PLOTTED => 16:07:29

DIST.	COUNTY	ROUTE	KILOMETER POST TOTAL PROJECT	SHEET NO.	TOTAL SHEETS
04	SF	80	13.2/13.9	1029R3	1204

REGISTERED ENGINEER - CIVIL

12-6-04
PLANS APPROVAL DATE

REGISTERED PROFESSIONAL ENGINEER Marwan N. Nader No. C 054426 Exp. 12/31/09 CIVIL STATE OF CALIFORNIA

The State of California or its officers or agents shall not be responsible for the accuracy or completeness of electronic copies of this plan sheet.

T.Y. LIN / MOFFATT & NICHOL
825 BATTERY STREET
SAN FRANCISCO, CA 94111

Caltrans now has a web site! To get to the web site, go to: http://www.dot.ca.gov

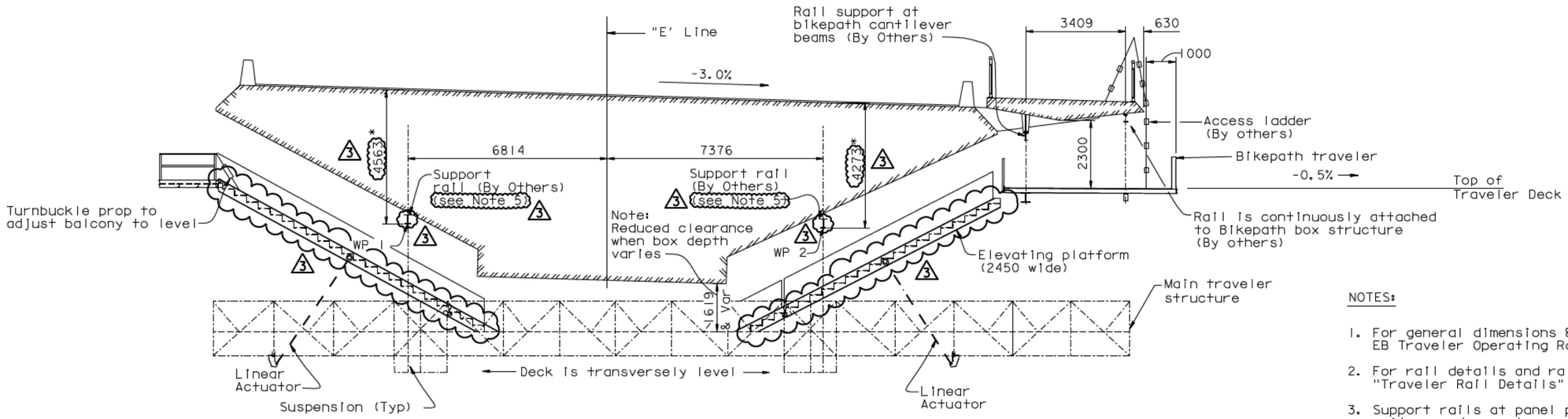

NOTES:

1. For general dimensions & notes see "E2/E3 EB Traveler Operating Ranges - 07" sheets.
2. For rail details and rail mounts see "Traveler Rail Details" sheets.
3. Support rails at panel points such that the rail span does not exceed 5300 mm.
4. All layout dimensions are given truly horizontal and truly vertical.
5. △3 The Contractor shall replace the Skyway Traveler as-built upper rails. For replacement details, see "Skyway Traveler Rail Replacement Details No. 1 to No. 9" sheets.

* Denotes vertical dimension from top of girder to u/s rail.

△3 SKYWAY STRUCTURE, RAIL MOUNTS AND UPPER RAIL ON SKYWAY IS WORK DONE BY OTHERS (SEE CONTRACT No. 04-012024)

E2/E3 EB TRAVELER AT EAST END OF TRANSITION SPAN

1:80

△3 REVISION △3 SUPERSEDES REVISIONS △1 & △2

CONTRACT CHANGE ORDER NO. ____
SHEET ___ OF ___

REQUESTS FOR INFORMATION NOT ADDRESSED IN THIS CCO REMAIN IN FORCE

MARK	DATE	DESCRIPTIONS	BY	CH'D	CCO#
△3	05/18/09	TRAVELER RAIL MODIFICATIONS	MN	NV	2450
△2	07/20/07	RAIL CHANGE & MISCELLANEOUS DETAILS	MN	NV	24
△1	08/04/06	TRAVELER RAILS	MN	NV	24

REVISIONS

R. Vallizadeh/V. Toan/Y.L./W.L./F.C.
DESIGN OVERSIGHT
SIGN OFF DATE 05/18/09

Rev. Date: 5-18-98

	BY	CHECKED
DESIGN	J. Otter	M. Nader
DETAILS	J. Otter	N. Vo
QUANTITIES	J. Otter	J. Leventini

PREPARED FOR THE STATE OF CALIFORNIA DEPARTMENT OF TRANSPORTATION

ORIGINAL SCALE IN MILLIMETERS FOR REDUCED PLANS 0 10 20 30 40 50 60 70 80 90 100

ALL DIMENSIONS ARE IN MILLIMETERS UNLESS OTHERWISE SHOWN

R. Manzanarez
PROJECT ENGINEER

CU 04
EA 0120F1

BRIDGE NO. 34-0006L/R
KILOMETER POST 13.2/13.9

DISREGARD PRINTS BEARING EARLIER REVISION DATES 04/18/02 07/20/02 12/19/02

SAN FRANCISCO OAKLAND BAY BRIDGE
EAST SPAN SEISMIC SAFETY PROJECT
SELF-ANCHORED SUSPENSION BRIDGE
(SUPERSTRUCTURE & TOWER)

E2/E3 EB TRAVELER OPERATING RANGES-08

REVISION DATES (PRELIMINARY STAGE ONLY)

SHEET 612R3 OF

FILE -> I:\bb\04-012001\sas\contract plans and cco\cco\cco#24s0\2-revision 05-18-09\dgn\aktrv024.dgn

100 % PS&E

USERNAME => cwinrow DATE PLOTTED => 19 MAY 2009 TIME PLOTTED => 16:09:01

DIST.	COUNTY	ROUTE	KILOMETER POST TOTAL PROJECT	SHEET NO.	TOTAL SHEETS
04	SF	80	13.2/13.9	1030R2	1204

REGISTERED ENGINEER - CIVIL

12-6-04
PLANS APPROVAL DATE

REGISTERED PROFESSIONAL ENGINEER Marwan N. Nader No. C 054426 Exp. 12/31/09 CIVIL STATE OF CALIFORNIA

The State of California or its officers or agents shall not be responsible for the accuracy or completeness of electronic copies of this plan sheet.

T.Y. LIN / MOFFATT & NICHOL
825 BATTERY STREET
SAN FRANCISCO, CA 94111

Caltrans now has a web site! To get to the web site, go to: http://www.dot.ca.gov

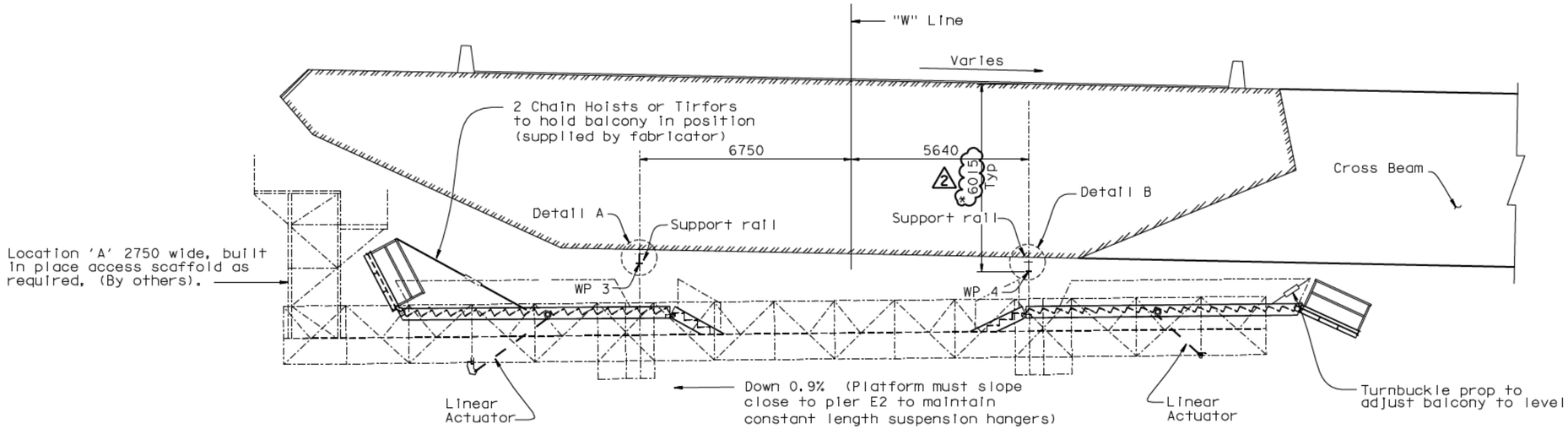

E2/E3 WB TRAVELER AT FACE OF PIER E2W

1:80

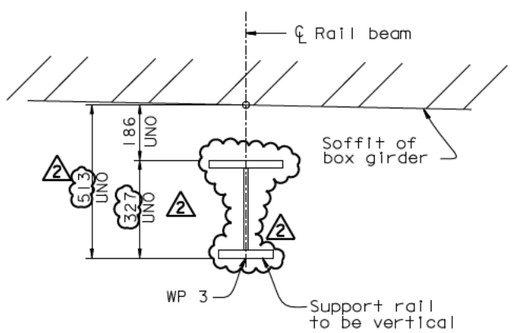

WP 3 Definition

DETAIL A

1:10

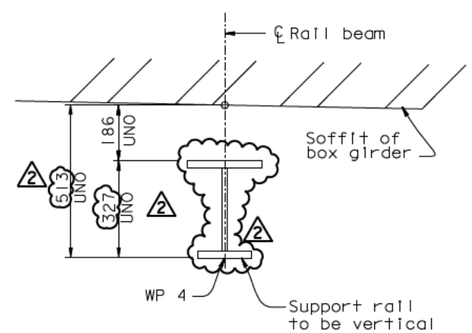

WP 4 Definition

DETAIL B

1:10

NOTES:

1. For general dimensions & notes see "E2/E3 WB Traveler Operating Ranges-07" sheet.
2. For rail details and rail mounts see "Traveler Rail Details" sheets.
3. Support rails at panel points such that the rails span does not exceed 5300 mm.
4. All layout dimensions are given truly horizontal and truly vertical.

* Denotes vertical dimension from top of girder to u/s rail.

Location 'A' built in place scaffold

Maximum scaffold weight = 500 kg
Maximum live load on scaffold = 500 kg

2 REVISION 2 SUPERSEDES REVISION 1

CONTRACT CHANGE ORDER NO. ____
SHEET ___ OF ___

REQUESTS FOR INFORMATION NOT ADDRESSED IN THIS CCO REMAIN IN FORCE

ALL DIMENSIONS ARE IN MILLIMETERS UNLESS OTHERWISE SHOWN

MARK	DATE	DESCRIPTIONS	BY	CH'D	CCO#
2	05/18/09	TRAVELER RAIL MODIFICATIONS	MN	NV	24S0
1	08/04/06	TRAVELER RAILS	MN	NV	24

REVISIONS

R. Valizadeh/V. Toan/Y.L./W.L./F.C.
DESIGN OVERSIGHT
SIGN OFF DATE 05/18/09

DESIGN BY J. Otter CHECKED M. Nader
DETAILS BY J. Otter CHECKED N. Vo
QUANTITIES BY J. Otter CHECKED J. Leventini

PREPARED FOR THE STATE OF CALIFORNIA DEPARTMENT OF TRANSPORTATION

R. Manzanarez
PROJECT ENGINEER

BRIDGE NO. 34-0006L/R
KILOMETER POST 13.2/13.9

SAN FRANCISCO OAKLAND BAY BRIDGE
EAST SPAN SEISMIC SAFETY PROJECT
SELF-ANCHORED SUSPENSION BRIDGE
(SUPERSTRUCTURE & TOWER)

E2/E3 WB TRAVELER OPERATING RANGES-01

Rev. Date: 5-18-98

ORIGINAL SCALE IN MILLIMETERS FOR REDUCED PLANS 0 10 20 30 40 50 60 70 80 90 100

CU 04
EA 0120F1

DISREGARD PRINTS BEARING EARLIER REVISION DATES

REVISION DATES (PRELIMINARY STAGE ONLY) 04/18/02 07/09/02 12/19/02

SHEET 613R2 OF

FILE -> I:\bb\04-01200I\sas\contract plans and cco\cco\cco#24s0\2-revision 05-18-09\dgn\aktrv025.dgn

100% PS&E

USERNAME => dwinrow DATE PLOTTED => 19 MAY 2009 TIME PLOTTED => 16:11:21

DIST.	COUNTY	ROUTE	KILOMETER POST TOTAL PROJECT	SHEET NO.	TOTAL SHEETS
04	SF	80	13.2/13.9	1031R2	1204

REGISTERED ENGINEER - CIVIL

12-6-04
PLANS APPROVAL DATE

REGISTERED PROFESSIONAL ENGINEER Marwan N. Nader No. C 054426 Exp. 12/31/09 CIVIL STATE OF CALIFORNIA

The State of California or its officers or agents shall not be responsible for the accuracy or completeness of electronic copies of this plan sheet.

T.Y. LIN / MOFFATT & NICHOL
825 BATTERY STREET
SAN FRANCISCO, CA 94111

Caltrans now has a web site! To get to the web site, go to: http://www.dot.ca.gov

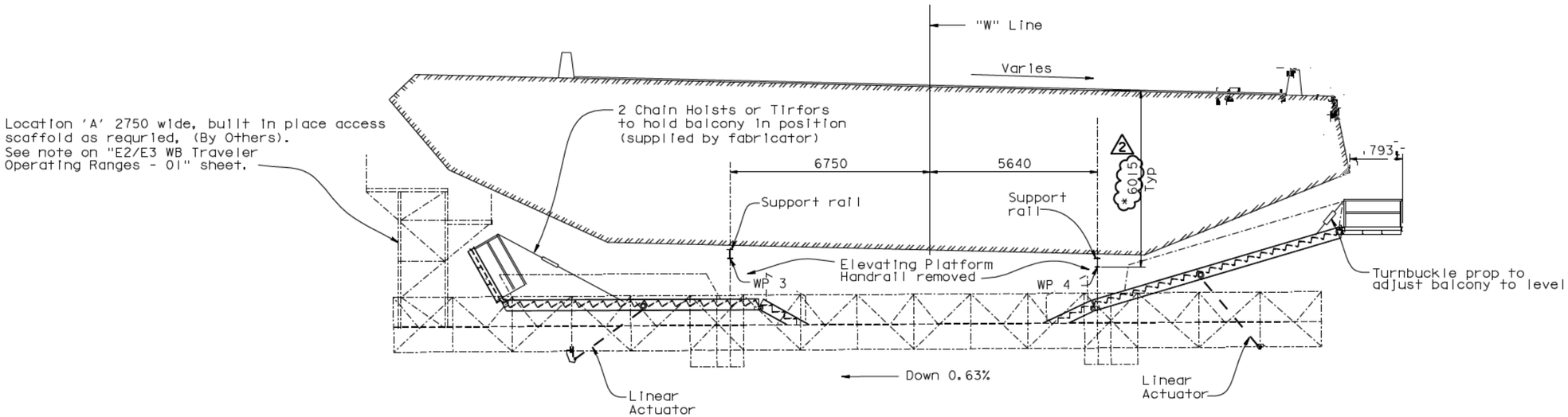

E2/E3 WB TRAVELER AT PP 121

1:80

NOTES:

1. For general dimensions & notes see "E2/E3 WB Traveler Operating Ranges-07" sheet.
2. For rail details and rail mounts see "Traveler Rail Details" sheets.
3. Support rails at panel points such that the rails span does not exceed 5300 mm.
4. All layout dimensions are given truly horizontal and truly vertical.

* Denotes vertical dimension from top of girder to u/s rail.

2 REVISION 2 SUPERSEDES REVISION 1

CONTRACT CHANGE ORDER NO. ____
SHEET ___ OF ___

REQUESTS FOR INFORMATION NOT ADDRESSED IN THIS CCO REMAIN IN FORCE

ALL DIMENSIONS ARE IN MILLIMETERS UNLESS OTHERWISE SHOWN

MARK	DATE	DESCRIPTIONS	BY	CH'D	CCO#
2	05/18/09	TRAVELER RAIL MODIFICATIONS	MN	NV	24S0
1	08/04/06	TRAVELER RAILS	MN	NV	24

REVISIONS

R. Valizadeh/V. Toan/Y.L./W.L./F.C.
DESIGN OVERSIGHT
Roya Valizadeh / Vong Toan / Y. Liu
SIGN OFF DATE 05/18/09

DESIGN BY J. Otter CHECKED M. Nader
DETAILS BY J. Otter CHECKED N. Vo
QUANTITIES BY J. Otter CHECKED J. Leventini

PREPARED FOR THE STATE OF CALIFORNIA DEPARTMENT OF TRANSPORTATION

R. Manzanarez
PROJECT ENGINEER

BRIDGE NO. 34-0006L/R
KILOMETER POST 13.2/13.9

SAN FRANCISCO OAKLAND BAY BRIDGE
EAST SPAN SEISMIC SAFETY PROJECT
SELF-ANCHORED SUSPENSION BRIDGE
(SUPERSTRUCTURE & TOWER)

E2/E3 WB TRAVELER OPERATING RANGES-02

Rev. Date: 5-18-98

ORIGINAL SCALE IN MILLIMETERS FOR REDUCED PLANS 0 10 20 30 40 50 60 70 80 90 100

CU 04
EA 0120F1

DISREGARD PRINTS BEARING EARLIER REVISION DATES

REVISION DATES (PRELIMINARY STAGE ONLY) 04/18/02 07/09/02 12/19/02

SHEET 614R2 OF

FILE -> I:\bb\04-012001\sas\contract plans and cco\cco\cco*24s0\2-revision 05-18-09\dgn\aktrv026.dgn

100% PS&E

USERNAME => dwinrow DATE PLOTTED => 19 MAY 2009 TIME PLOTTED => 16:12:52

DIST.	COUNTY	ROUTE	KILOMETER POST TOTAL PROJECT	SHEET NO.	TOTAL SHEETS
04	SF	80	13.2/13.9	1032R2	1204

REGISTERED ENGINEER - CIVIL

12-6-04
PLANS APPROVAL DATE

REGISTERED PROFESSIONAL ENGINEER Marwan N. Nader No. C 054426 Exp. 12/31/09 CIVIL STATE OF CALIFORNIA

The State of California or its officers or agents shall not be responsible for the accuracy or completeness of electronic copies of this plan sheet.

T.Y. LIN / MOFFATT & NICHOL
825 BATTERY STREET
SAN FRANCISCO, CA 94111

Caltrans now has a web site! To get to the web site, go to: http://www.dot.ca.gov

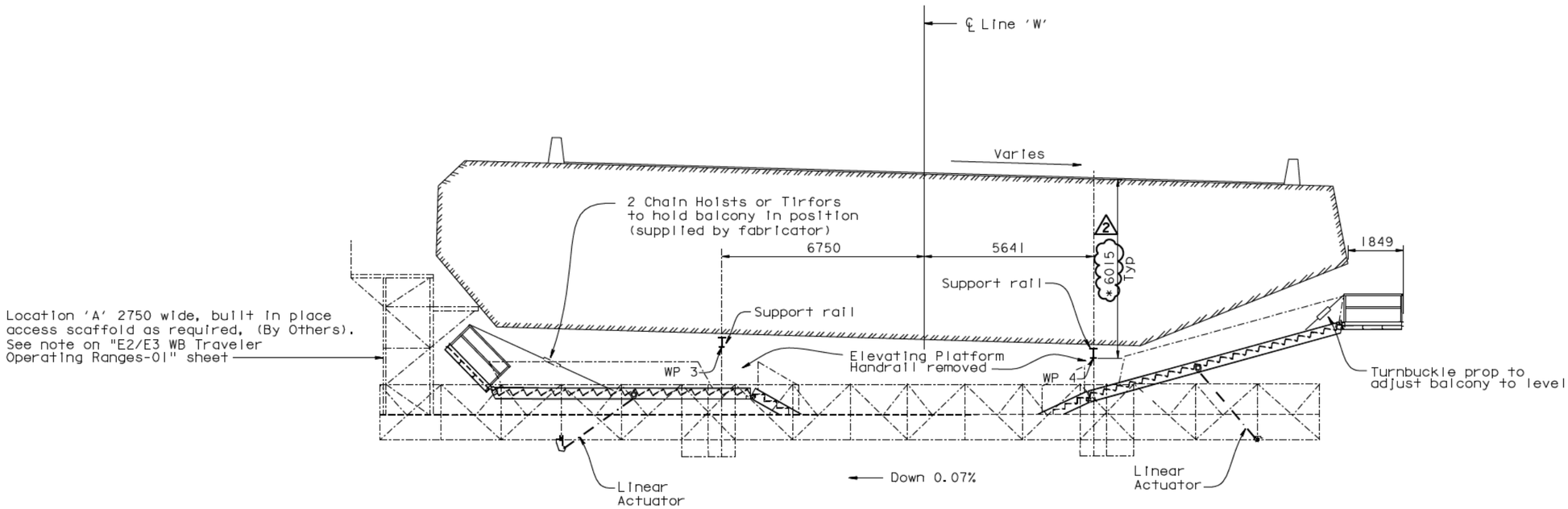

E2/E3 WB TRAVELER AT PP 124

1:80

NOTES:

1. For general dimensions & notes see "E2/E3 WB Traveler Operating Ranges - 07" sheet.
2. For rail details and rail mounts see "Traveler Rail Details" sheets.
3. Support rails at panel points such that the rails span does not exceed 5300 mm.
4. All layout dimensions are given truly horizontal and truly vertical.

* Denotes vertical dimension from top of girder to u/s rail.

2 REVISION 2 SUPERSEDES REVISION 1

CONTRACT CHANGE ORDER NO. ____
SHEET ___ OF ___

REQUESTS FOR INFORMATION NOT ADDRESSED IN THIS CCO REMAIN IN FORCE

ALL DIMENSIONS ARE IN MILLIMETERS UNLESS OTHERWISE SHOWN

R. Valizadeh/V. Toan/Y.L./W.L./F.C.
DESIGN OVERSIGHT
SIGN OFF DATE 05/18/09

MARK	DATE	DESCRIPTIONS	BY	CH'D	CCO#
2	05/18/09	TRAVELER RAIL MODIFICATIONS	MN	NV	2450
1	08/04/06	TRAVELER RAILS	MN	NV	24

REVISIONS

	BY	CHECKED
DESIGN	J. Otter	M. Nader
DETAILS	J. Otter	N. Vo
QUANTITIES	J. Otter	J. Leventini

PREPARED FOR THE STATE OF CALIFORNIA DEPARTMENT OF TRANSPORTATION

R. Manzanarez
PROJECT ENGINEER

BRIDGE NO. 34-0006L/R
KILOMETER POST 13.2/13.9

SAN FRANCISCO OAKLAND BAY BRIDGE
EAST SPAN SEISMIC SAFETY PROJECT
SELF-ANCHORED SUSPENSION BRIDGE
(SUPERSTRUCTURE & TOWER)

E2/E3 WB TRAVELER OPERATING RANGES-03

Rev. Date: 5-18-98

ORIGINAL SCALE IN MILLIMETERS FOR REDUCED PLANS 0 10 20 30 40 50 60 70 80 90 100

CU 04
EA 0120F1

DISREGARD PRINTS BEARING EARLIER REVISION DATES

REVISION DATES (PRELIMINARY STAGE ONLY) 04/19/02 07/29/02 12/19/02

SHEET 615R2 OF

FILE -> I:\bb\04-012001\sas\contract plans and cco\cco\cco#24s0\2-revision 05-18-09\dgn\aktrv027.dgn

100 % PS&E

USERNAME => dwinrow DATE PLOTTED => 19 MAY 2009 TIME PLOTTED => 16:13:56

DIST.	COUNTY	ROUTE	KILOMETER POST TOTAL PROJECT	SHEET NO.	TOTAL SHEETS
04	SF	80	13.2/13.9	1033R2	1204

REGISTERED ENGINEER - CIVIL

12-6-04
PLANS APPROVAL DATE

REGISTERED PROFESSIONAL ENGINEER Marwan N. Nader No. C 054426 Exp. 12/31/09 CIVIL STATE OF CALIFORNIA

The State of California or its officers or agents shall not be responsible for the accuracy or completeness of electronic copies of this plan sheet.

T.Y. LIN / MOFFATT & NICHOL
825 BATTERY STREET
SAN FRANCISCO, CA 94111

Caltrans now has a web site! To get to the web site, go to: http://www.dot.ca.gov

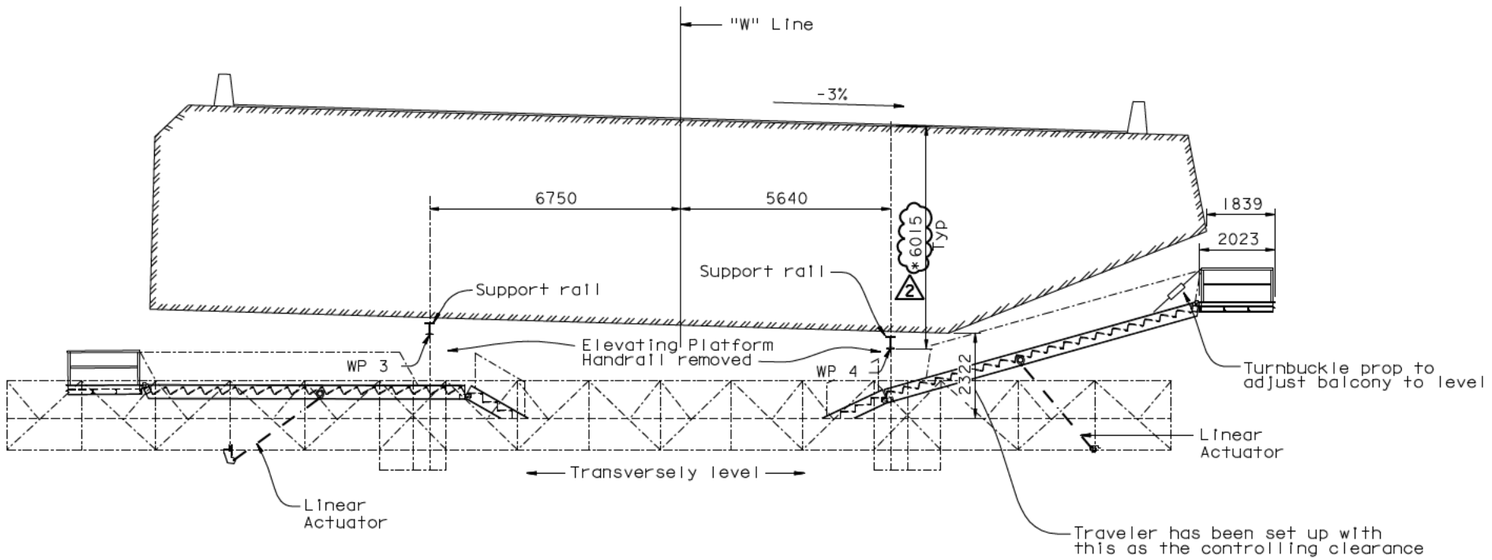

E2/E3 WB TRAVELER AT PP 127

1:80

NOTES:

1. For general dimensions & notes see "E2/E3 WB Traveler Operating Ranges-07" sheet.
2. For rail details and rail mounts see "Traveler Rail Details" sheets.
3. Support rails at panel points such that the rails span does not exceed 5300 mm.
4. All layout dimensions are given truly horizontal and truly vertical.

* Denotes vertical dimension from top of girder to u/s rail.

2 REVISION 2 SUPERSEDES REVISION 1

CONTRACT CHANGE ORDER NO. ____
SHEET ___ OF ___

REQUESTS FOR INFORMATION NOT ADDRESSED IN THIS CCO REMAIN IN FORCE

ALL DIMENSIONS ARE IN MILLIMETERS UNLESS OTHERWISE SHOWN

R. Vallizadeh/V. Toan/Y.L./W.L./F.C.
DESIGN OVERSIGHT
Roya Vallizadeh / Vong Toan / Y. Liu
SIGN OFF DATE 05/18/09

MARK	DATE	DESCRIPTIONS	BY	CH'D	CCO#
2	05/18/09	TRAVELER RAIL MODIFICATIONS	MN	NV	2450
1	08/04/06	TRAVELER RAILS	MN	NV	24

REVISIONS

	BY	CHECKED
DESIGN	J. Otter	M. Nader
DETAILS	J. Otter	N. Vo
QUANTITIES	J. Otter	J. Leventini

PREPARED FOR THE STATE OF CALIFORNIA DEPARTMENT OF TRANSPORTATION

R. Manzanarez
PROJECT ENGINEER

BRIDGE NO. 34-0006L/R
KILOMETER POST 13.2/13.9

SAN FRANCISCO OAKLAND BAY BRIDGE
EAST SPAN SEISMIC SAFETY PROJECT
SELF-ANCHORED SUSPENSION BRIDGE
(SUPERSTRUCTURE & TOWER)

E2/E3 WB TRAVELER OPERATING RANGES-04

Rev. Date: 5-18-98

ORIGINAL SCALE IN MILLIMETERS FOR REDUCED PLANS 0 10 20 30 40 50 60 70 80 90 100

CU 04
EA 0120F1

DISREGARD PRINTS BEARING EARLIER REVISION DATES

REVISION DATES (PRELIMINARY STAGE ONLY) 04/15/02 07/09/02 12/19/02

SHEET 616R2 OF

FILE -> I:\bb\04-012001\sas\contract plans and cco\cco\cco#24s0\2-revision 05-18-09\dgn\aktrv028.dgn

100 % PS&E

USERNAME => dwinrow DATE PLOTTED => 19 MAY 2009 TIME PLOTTED => 16:34:10

DIST.	COUNTY	ROUTE	KILOMETER POST TOTAL PROJECT	SHEET NO.	TOTAL SHEETS
04	SF	80	13.2/13.9	1034R2	1204

REGISTERED ENGINEER - CIVIL

12-6-04
PLANS APPROVAL DATE

REGISTERED PROFESSIONAL ENGINEER Marwan N. Nader No. C 054426 Exp. 12/31/09 CIVIL STATE OF CALIFORNIA

The State of California or its officers or agents shall not be responsible for the accuracy or completeness of electronic copies of this plan sheet.

T.Y. LIN / MOFFATT & NICHOL
825 BATTERY STREET
SAN FRANCISCO, CA 94111

Caltrans now has a web site! To get to the web site, go to: http://www.dot.ca.gov

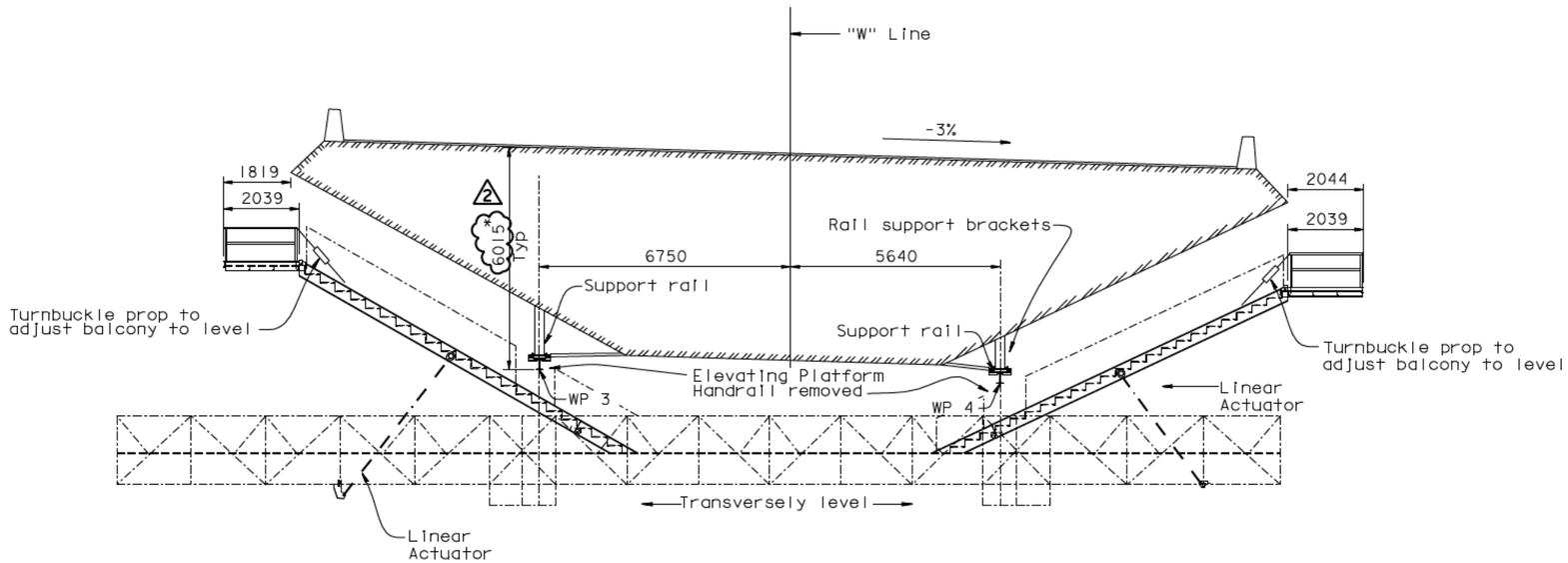

E2/E3 WB TRAVELER AT PP 128

1:80

NOTES:

1. For general dimensions & notes see "E2/E3 WB Traveler Operating Ranges-07" sheet.
2. For rail details and rail mounts see "Traveler Rail Details" sheets.
3. Support rails at panel points such that the rails span does not exceed 5300 mm.
4. All layout dimensions are given truly horizontal and truly vertical.

* Denotes vertical dimension from top of girder to u/s rail.

2 REVISION 2 SUPERSEDES REVISION 1

CONTRACT CHANGE ORDER NO. ____
SHEET ___ OF ___

REQUESTS FOR INFORMATION NOT ADDRESSED IN THIS CCO REMAIN IN FORCE

ALL DIMENSIONS ARE IN MILLIMETERS UNLESS OTHERWISE SHOWN

MARK	DATE	DESCRIPTIONS	BY	CH'D	CCO#
2	05/18/09	TRAVELER RAIL MODIFICATIONS	MN	NV	2450
1	08/04/06	TRAVELER RAILS	MN	NV	24

REVISIONS

R. Vallizadeh/V. Toan/Y.L./W.L./F.C.
DESIGN OVERSIGHT
SIGN OFF DATE 05/18/09

	BY	CHECKED
DESIGN	J. Otter	M. Nader
DETAILS	J. Otter	N. Vo
QUANTITIES	J. Otter	J. Leventini

PREPARED FOR THE STATE OF CALIFORNIA DEPARTMENT OF TRANSPORTATION

R. Manzanarez
PROJECT ENGINEER

BRIDGE NO. 34-0006L/R
KILOMETER POST 13.2/13.9

SAN FRANCISCO OAKLAND BAY BRIDGE
EAST SPAN SEISMIC SAFETY PROJECT
SELF-ANCHORED SUSPENSION BRIDGE
(SUPERSTRUCTURE & TOWN)

E2/E3 WB TRAVELER OPERATING RANGES-05

Rev. Date: 5-18-98

ORIGINAL SCALE IN MILLIMETERS FOR REDUCED PLANS 0 10 20 30 40 50 60 70 80 90 100

CU 04
EA 0120F1

DISREGARD PRINTS BEARING EARLIER REVISION DATES

REVISION DATES (PRELIMINARY STAGE ONLY) 04/18/02 07/01/02 12/19/02

SHEET 617R2 OF

FILE -> I:\bb\04-012001\sas\contract plans and cco\cco\cco#24s0\2-revision 05-18-09\dgn\aktrv029.dgn

100 % PS&E

USERNAME => dwinrow DATE PLOTTED => 19 MAY 2009 TIME PLOTTED => 16:15:56

DIST.	COUNTY	ROUTE	KILOMETER POST TOTAL PROJECT	SHEET NO.	TOTAL SHEETS
04	SF	80	13.2/13.9	1035R3	1204

REGISTERED ENGINEER - CIVIL

12-6-04
PLANS APPROVAL DATE

REGISTERED PROFESSIONAL ENGINEER Marwan N. Nader No. C 054426 Exp. 12/31/09 CIVIL STATE OF CALIFORNIA

The State of California or its officers or agents shall not be responsible for the accuracy or completeness of electronic copies of this plan sheet.

T.Y. LIN / MOFFATT & NICHOL
825 BATTERY STREET
SAN FRANCISCO, CA 94111

Caltrans now has a web site! To get to the web site, go to: http://www.dot.ca.gov

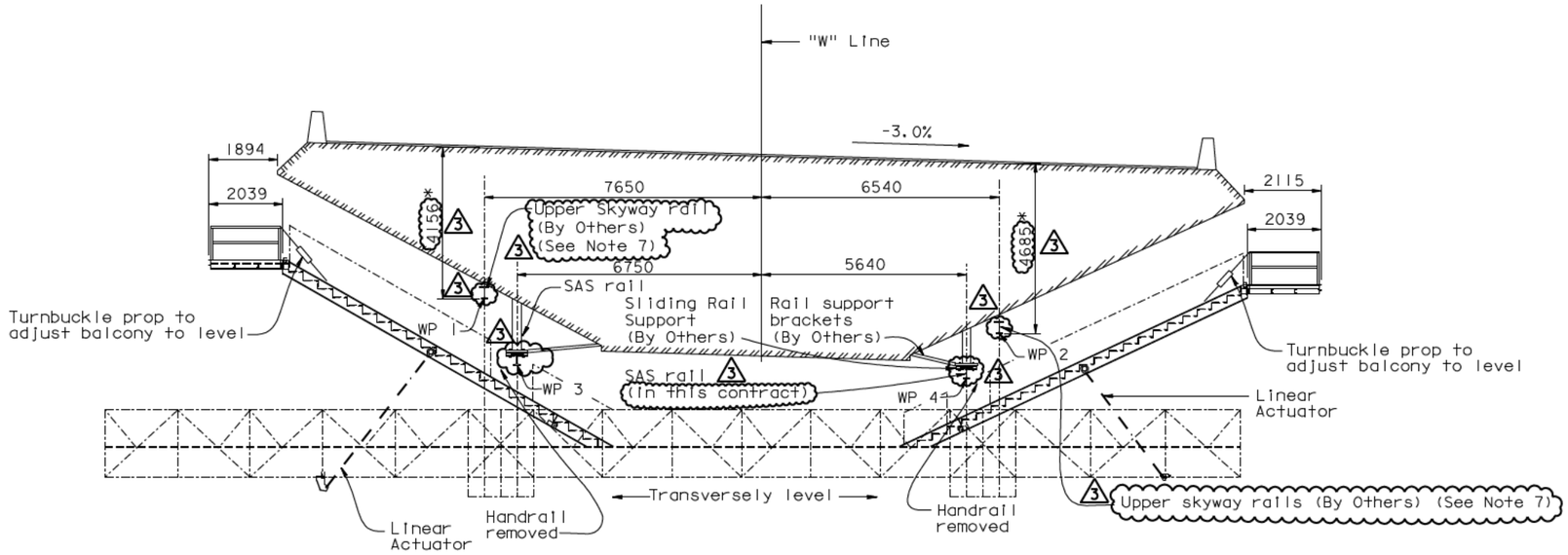

E2/E3 WB TRAVELER
EAST OF HINGE A
1180

This section applies for 9.1 m east of Hinge A, Suspension is changed from Transition Span rails to SAS rails at this location.

NOTES:

1. For general dimensions & notes see "E2/E3 WB Traveler Operating Ranges - 07" sheet.
2. For rail details and rail mounts see "Traveler Rail Details" sheets.
3. Support rails at panel points such that the rail span does not exceed 5300 mm.
4. All layout dimensions are given truly horizontal and truly vertical.
5. E2/E3 WB Traveler Transition span (Skyway) rails, brackets & the mountings to support SAS rails to the Skyway structures are By Others. SAS rails are supplied and installed under this contract. See "Traveler Rail Details" sheets.
6. For details of rails crossing Hinge A, see "Traveler Details No.9" and "Traveler Details No.10" sheets.
7. (3) The Contractor shall replace the Skyway Traveler as-built rails. For replacement details, see "Skyway Traveler Rail Replacement Details No.1 to No.9" sheets.

* Denotes vertical dimension from top of girder to u/s rail.

(3) SKYWAY STRUCTURE, RAIL SUPPORTS AND UPPER SKYWAY RAIL IS WORK DONE BY OTHERS (SEE CONTRACT No. 04-012024)

(3) REVISION (3) SUPERSEDES REVISIONS (1) & (2)

CONTRACT CHANGE ORDER NO. ____
SHEET ___ OF ___

REQUESTS FOR INFORMATION NOT ADDRESSED IN THIS CCO REMAIN IN FORCE

MARK	DATE	DESCRIPTIONS	BY	CH'D	CCO#
3	05/18/09	TRAVELER RAIL MODIFICATIONS	MN	NV	2450
2	07/20/07	RAIL CHANGE & MISCELLANEOUS DETAILS	MN	NV	24
1	08/04/06	TRAVELER RAILS	MN	NV	24

REVISIONS

R. Valizadeh/V. Toan/Y.L./W.L./F.C.
DESIGN OVERSIGHT
SIGN OFF DATE 05/18/09

Rev. Date: 5-18-98

	BY	CHECKED
DESIGN	J. Otter	M. Nader
DETAILS	J. Otter	N. Vo
QUANTITIES	J. Otter	J. Leventini

PREPARED FOR THE STATE OF CALIFORNIA DEPARTMENT OF TRANSPORTATION

ALL DIMENSIONS ARE IN MILLIMETERS UNLESS OTHERWISE SHOWN

R. Manzanarez
PROJECT ENGINEER

BRIDGE NO. 34-0006L/R
KILOMETER POST 13.2/13.9

SAN FRANCISCO OAKLAND BAY BRIDGE
EAST SPAN SEISMIC SAFETY PROJECT
SELF-ANCHORED SUSPENSION BRIDGE
(SUPERSTRUCTURE & TOWER)

E2/E3 WB TRAVELER OPERATING RANGES-06

ORIGINAL SCALE IN MILLIMETERS FOR REDUCED PLANS 0 10 20 30 40 50 60 70 80 90 100

CU 04
EA 0120F1

DISREGARD PRINTS BEARING EARLIER REVISION DATES

REVISION DATES (PRELIMINARY STAGE ONLY) 04/15/02 07/29/02 12/19/02

SHEET 618R3 OF

FILE -> I:\bb\04-012001\sas\contract plans and cco\cco\cco#24s0\2-revision 05-18-09\dgn\aktrv030.dgn

100% PS&E

USERNAME => dwinrow DATE PLOTTED => 19 MAY 2009 TIME PLOTTED => 16:17:10

DIST.	COUNTY	ROUTE	KILOMETER POST TOTAL PROJECT	SHEET NO.	TOTAL SHEETS
04	SF	80	13.2/13.9	1036R3	1204

Caltrans Metric

REGISTERED ENGINEER - CIVIL

12-6-04
PLANS APPROVAL DATE

REGISTERED PROFESSIONAL ENGINEER Marwan N. Nader No. C 054426 Exp. 12/31/09 CIVIL STATE OF CALIFORNIA

The State of California or its officers or agents shall not be responsible for the accuracy or completeness of electronic copies of this plan sheet.

T.Y. LIN / MOFFATT & NICHOL
825 BATTERY STREET
SAN FRANCISCO, CA 94111

Caltrans now has a web site! To get to the web site, go to: http://www.dot.ca.gov

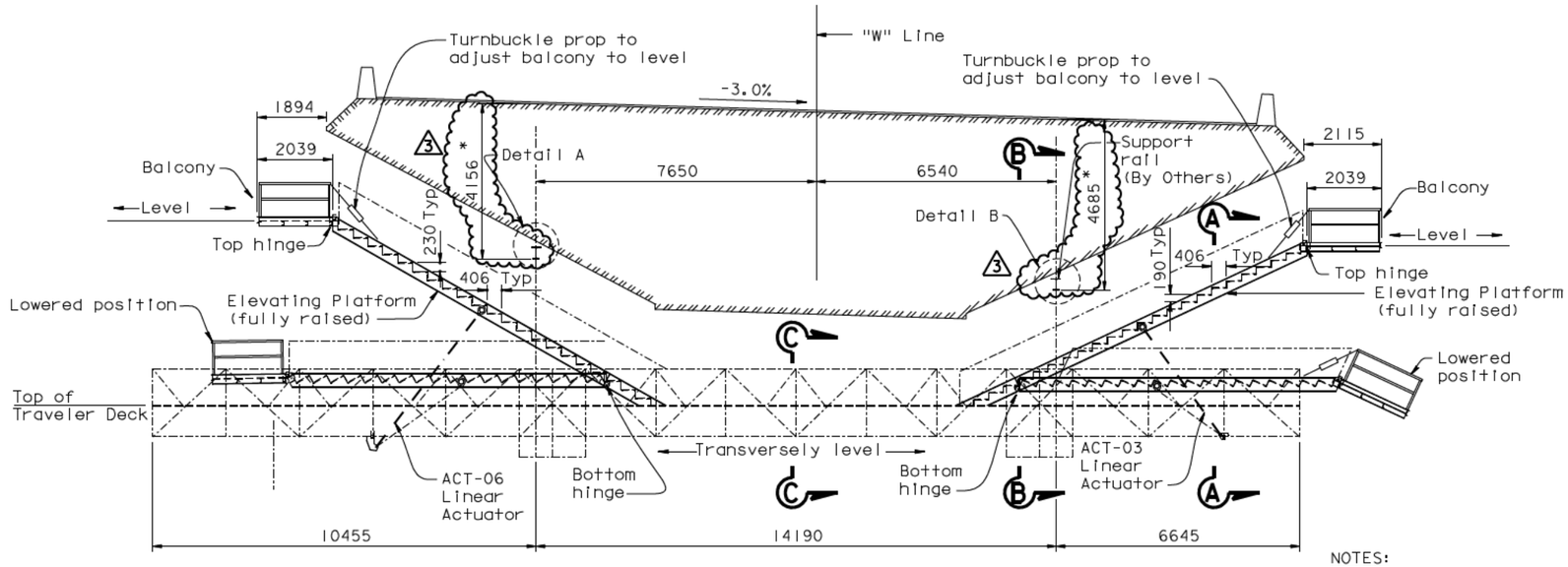

STA. 62+17.385

TOWARDS WEST END OF TRANSITION SPAN

CONTROLLING DIMENSIONS

1:80

NOTES:

1. For rail details and rail mounts see "Traveler Rail Details" sheets.
2. Support rails at panel points such that the rails span does not exceed 5300 mm.
3. All layout dimensions are given truly horizontal and truly vertical.
4. Use these drawings to locate rail positions.
5. The Contractor shall remove the existing Skyway Traveler as-built upper rails. For replacement rail details, see "Skyway Traveler Rail Replacement Details No. 1 to No. 9" sheets. (3)

* Denotes vertical dimension from top of girder to u/s rail.

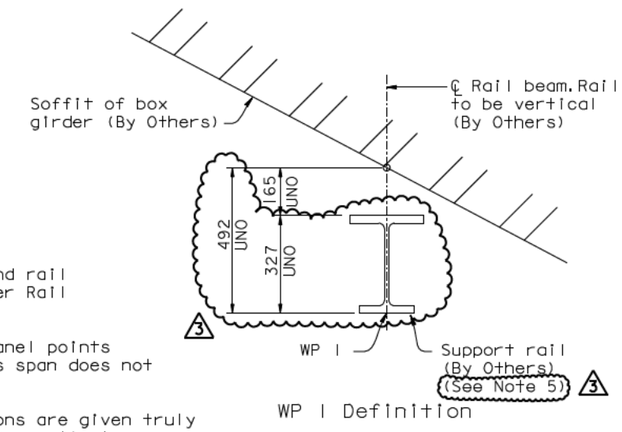

WP 1 Definition

DETAIL A

1:10

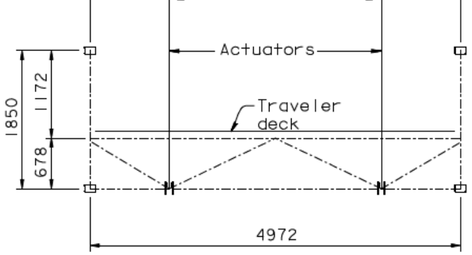

SECTION A-A

(3) SKYWAY STRUCTURE, RAIL SUPPORTS AND UPPER SKYWAY RAIL IS WORK DONE BY OTHERS (SEE CONTRACT No. 04-012024)

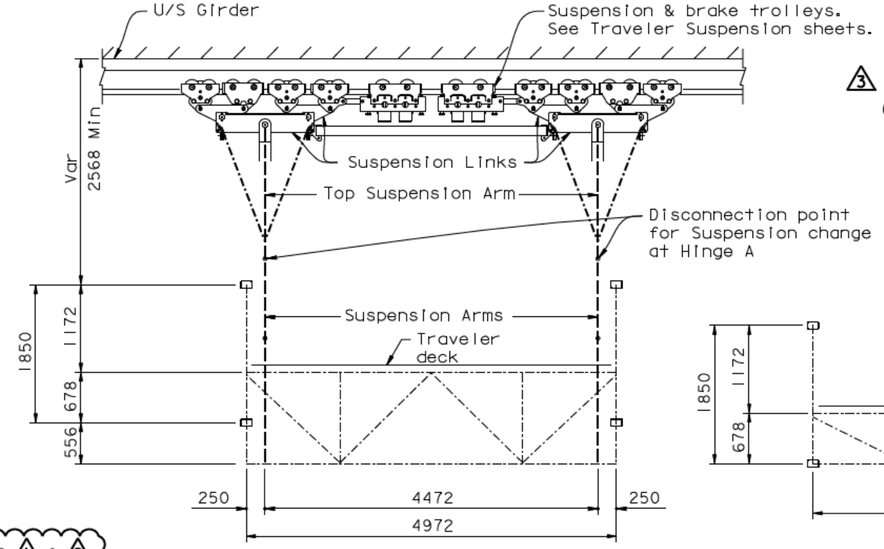

SECTION B-B

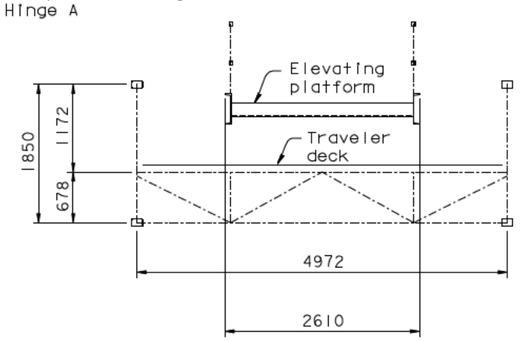

SECTION C-C

SCHEMATIC CROSS SECTIONS

1:40

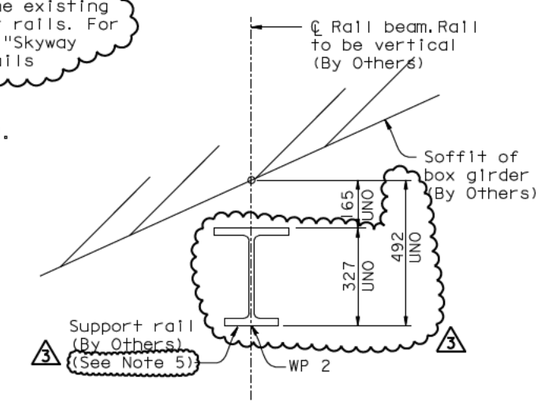

WP 2 Definition

DETAIL B

1:10

(3) REVISION (3) SUPERSEDES REVISIONS (1) & (2)

CONTRACT CHANGE ORDER NO. ____
SHEET ___ OF ___

REQUESTS FOR INFORMATION NOT ADDRESSED IN THIS CCO REMAIN IN FORCE

MARK	DATE	DESCRIPTIONS	BY	CH'D	CCO#
3	05/18/09	TRAVELER RAIL MODIFICATIONS	MN	NV	2450
2	07/20/07	RAIL CHANGE & MISCELLANEOUS DETAILS	MN	NV	24
1	08/04/06	TRAVELER RAILS	MN	NV	24

REVISIONS

ALL DIMENSIONS ARE IN MILLIMETERS UNLESS OTHERWISE SHOWN

R. Vallizadeh/V. Toan/Y.L./W.L./F.C.
DESIGN OVERSIGHT
Ryan Vallizadeh / Vong Toan / Y. Liu
SIGN OFF DATE 05/18/09

Rev. Date: 5-18-98

	BY	CHECKED
DESIGN	J. Otter	M. Nader
DETAILS	J. Otter	N. Vo
QUANTITIES	J. Otter	J. Leventini

PREPARED FOR THE STATE OF CALIFORNIA DEPARTMENT OF TRANSPORTATION

R. Manzanarez
PROJECT ENGINEER

CU 04
EA 0120F1

BRIDGE NO. 34-0006L/R
KILOMETER POST 13.2/13.9

DISREGARD PRINTS BEARING EARLIER REVISION DATES 04/18/02 07/20/02 12/19/02

ORIGINAL SCALE IN MILLIMETERS FOR REDUCED PLANS 0 10 20 30 40 50 60 70 80 90 100

SAN FRANCISCO OAKLAND BAY BRIDGE
EAST SPAN SEISMIC SAFETY PROJECT
SELF-ANCHORED SUSPENSION BRIDGE
(SUPERSTRUCTURE & TOWER)

E2/E3 WB TRAVELER OPERATING RANGES-07

SHEET 619R3 OF

FILE -> I:\bb\04-012001\sas\contract plans and cco\cco\cco#2450\2-revision 05-18-09\dgn\aktrv031.dgn

USERNAME => dwinrow DATE PLOTTED => 19 MAY 2009 TIME PLOTTED => 16:18:26

100 % PS&E

DIST.	COUNTY	ROUTE	KILOMETER POST TOTAL PROJECT	SHEET NO.	TOTAL SHEETS
04	SF	80	13.2/13.9	1037R3	1204

REGISTERED ENGINEER - CIVIL

12-6-04
PLANS APPROVAL DATE

REGISTERED PROFESSIONAL ENGINEER Marwan N. Nader No. C 054426 Exp. 12/31/09 CIVIL STATE OF CALIFORNIA

The State of California or its officers or agents shall not be responsible for the accuracy or completeness of electronic copies of this plan sheet.

T.Y. LIN / MOFFATT & NICHOL
825 BATTERY STREET
SAN FRANCISCO, CA 94111

Caltrans now has a web site! To get to the web site, go to: http://www.dot.ca.gov

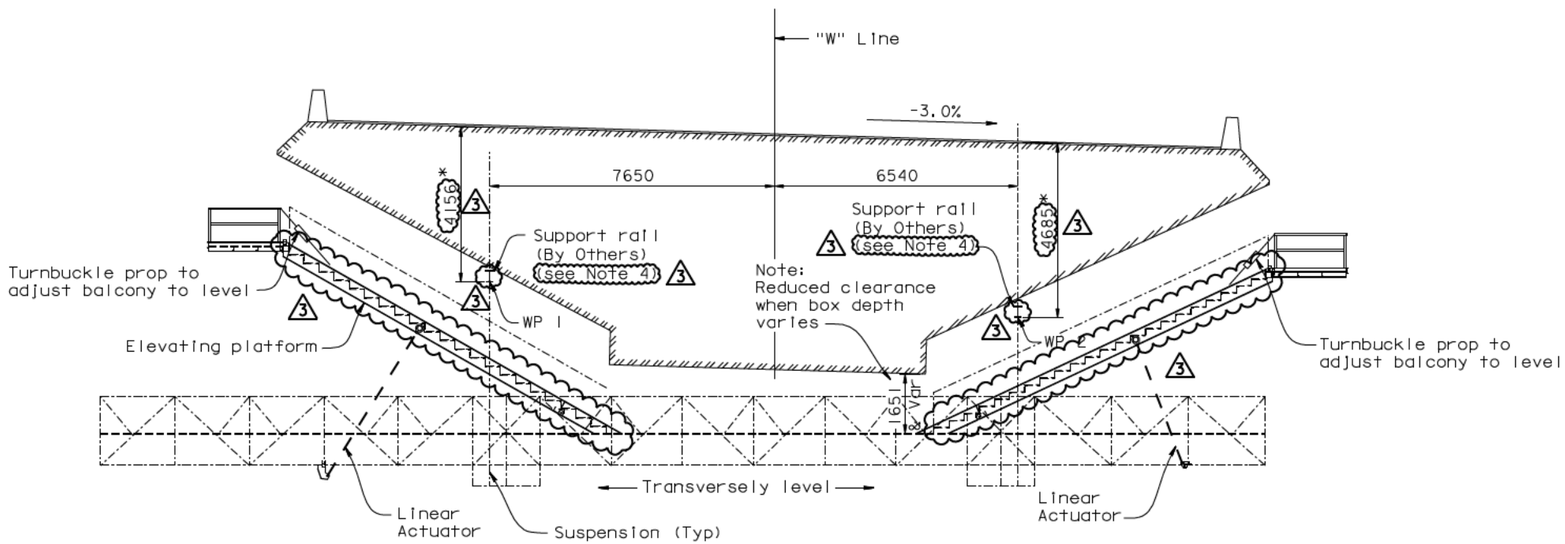

STA. 62+79.385

E2/E3 WB TRAVELER AT

EAST END OF TRANSITION SPAN

1:80

SKYWAY STRUCTURE, RAIL SUPPORTS AND UPPER SKYWAY RAIL IS WORK DONE BY OTHERS (SEE CONTRACT No. 04-012024) 3

NOTES:

1. For general dimensions & notes see "E2/E3 WB Traveler Operating Ranges - 07" sheet.
2. For rail details and rail mounts see "Traveler Rail Details" sheets.
3. All layout dimensions are given truly horizontal and truly vertical.
4. 3 The Contractor shall replace the Skyway Traveler as-built upper rails. For replacement details, see "Skyway Traveler Rail Replacement Details No.1 to No.9" sheets.

* Denotes vertical dimension from top of girder to u/s rail.

3 REVISION 3 SUPERSEDES REVISIONS 1 & 2

CONTRACT CHANGE ORDER NO. ____
SHEET ___ OF ___

REQUESTS FOR INFORMATION NOT ADDRESSED IN THIS CCO REMAIN IN FORCE

MARK	DATE	DESCRIPTIONS	BY	CH'D	CCO#
3	05/18/09	TRAVELER RAIL MODIFICATIONS	MN	NV	2450
2	07/20/07	RAIL CHANGE & MISCELLANEOUS DETAILS	MN	NV	24
1	08/04/06	TRAVELER RAILS	MN	NV	24

REVISIONS

R. Valizadeh/V. Toan/Y.L./W.L./F.C.
DESIGN OVERSIGHT
Roya Valizadeh / Vong Toan / Y. Liu
SIGN OFF DATE 05/18/09

Rev. Date: 5-18-98

	BY	CHECKED
DESIGN	J. Otter	M. Nader
DETAILS	J. Otter	N. Vo
QUANTITIES	J. Otter	J. Leventini

PREPARED FOR THE STATE OF CALIFORNIA DEPARTMENT OF TRANSPORTATION

ORIGINAL SCALE IN MILLIMETERS FOR REDUCED PLANS 0 10 20 30 40 50 60 70 80 90 100

ALL DIMENSIONS ARE IN MILLIMETERS UNLESS OTHERWISE SHOWN

R. Manzanarez
PROJECT ENGINEER

BRIDGE NO. 34-0006L/R
KILOMETER POST 13.2/13.9

CU 04
EA 0120F1

DISREGARD PRINTS BEARING EARLIER REVISION DATES 04/18/02 07/09/02 12/19/02

SAN FRANCISCO OAKLAND BAY BRIDGE
EAST SPAN SEISMIC SAFETY PROJECT
SELF-ANCHORED SUSPENSION BRIDGE
(SUPERSTRUCTURE & TOWER)

E2/E3 WB TRAVELER OPERATING RANGES-08

SHEET 620R3 OF

FILE -> I:\bb\04-012001\sas\contract plans and cco\cco\cco#24s0\2-revision 05-18-09\dgn\aktrv032.dgn

100 % PS&E

USERNAME => dwinrow DATE PLOTTED => 19 MAY 2009 TIME PLOTTED => 16:19:17

DIST.	COUNTY	ROUTE	KILOMETER POST TOTAL PROJECT	SHEET NO.	TOTAL SHEETS
04	SF	80	13.2/13.9	1037SIR1	1204

Caltrans Metric

REGISTERED ENGINEER - CIVIL

07-20-07

PLANS APPROVAL DATE

REGISTERED PROFESSIONAL ENGINEER Tien Hung Ho No. C 43990 Exp. 06/30/09 CIVIL STATE OF CALIFORNIA

The State of California or its officers or agents shall not be responsible for the accuracy or completeness of electronic copies of this plan sheet.

T.Y. LIN / MOFFATT & NICHOL
825 BATTERY STREET
SAN FRANCISCO, CA 94111

Caltrans now has a web site! To get to the web site, go to: http://www.dot.ca.gov

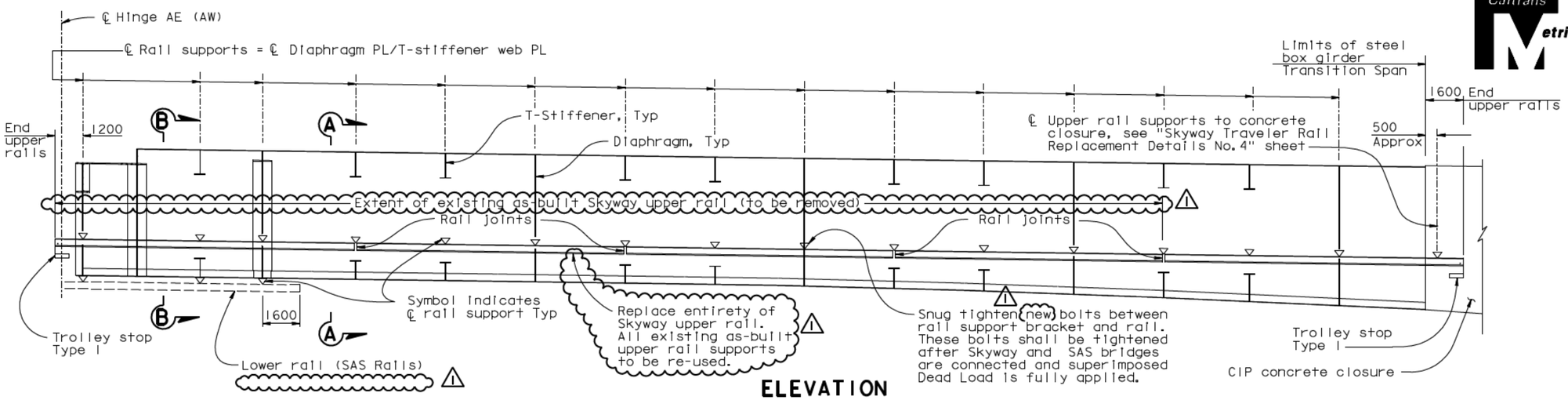

ELEVATION

1:125

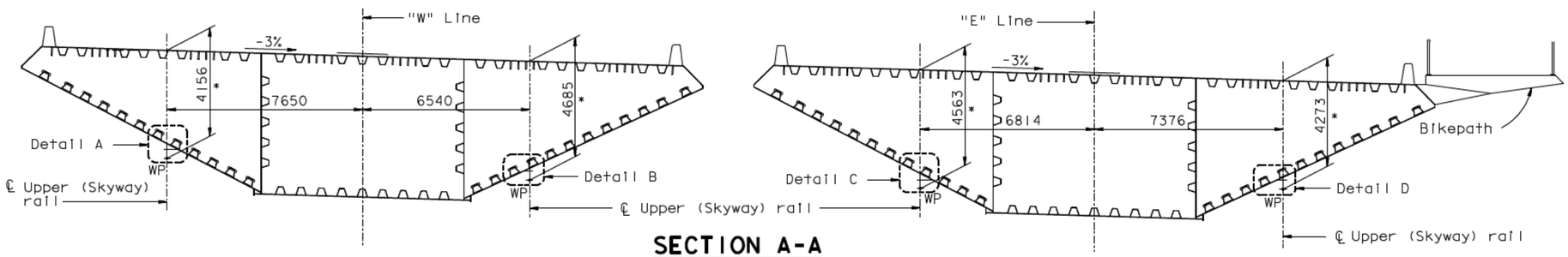

SECTION A-A

1:100

Note: Location of upper rails within limits of concrete closure similar.

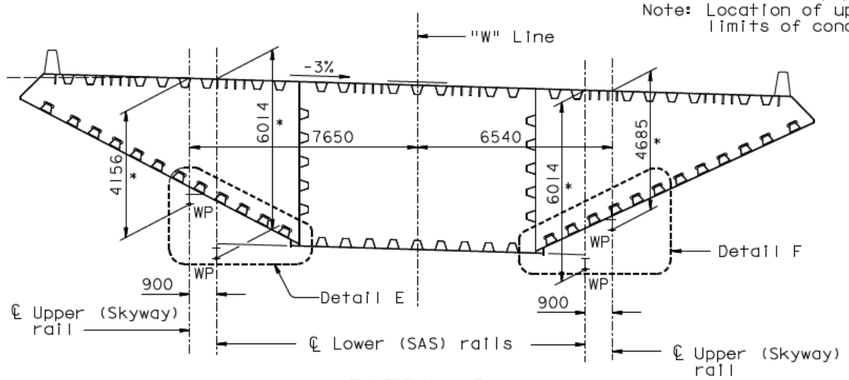

WESTBOUND

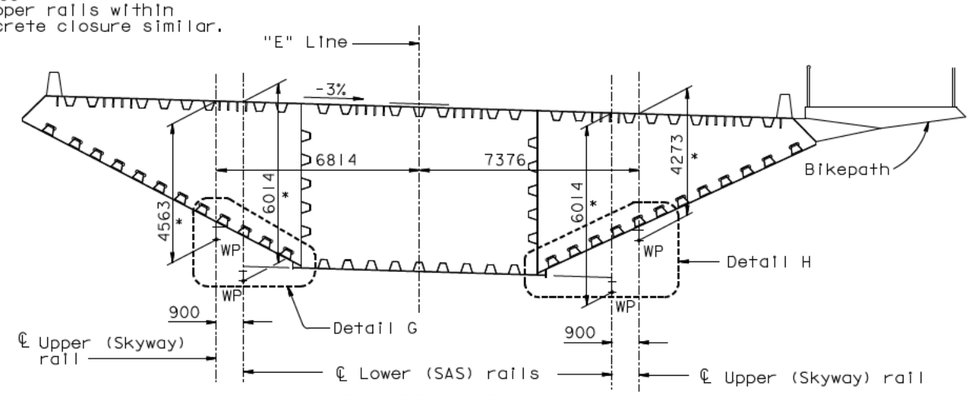

EASTBOUND

SECTION B-B

1:100

* Denoted vertical dimension from top of girder to underside rail.

NOTES:

1. Field measure Skyway Structure to determine the required rail dimensions.
2. For Details A & B, see "Skyway Traveler Rail Replacement Details No. 2" sheet.
3. For Details C & D, see "Skyway Traveler Rail Replacement Details No. 3" sheet.
4. For Detail E, see "Skyway Traveler Rail Replacement Details No. 6" sheet.
5. For Detail F, see "Skyway Traveler Rail Replacement Details No. 7" sheet.
6. For Detail G, see "Skyway Traveler Rail Replacement Details No. 8" sheet.
7. For Detail H, see "Skyway Traveler Rail Replacement Details No. 9" sheet.
8. For Trolley Stop Type I, see "Skyway Traveler Rail Replacement Details No. 6" sheet.

REVISION 1 SUPERSEDES REVISION 0

CONTRACT CHANGE ORDER NO. ____
SHEET ___ OF ___

REQUESTS FOR INFORMATION NOT ADDRESSED IN THIS CCO REMAIN IN FORCE

ALL DIMENSIONS ARE IN MILLIMETERS UNLESS OTHERWISE SHOWN

MARK	DATE	DESCRIPTIONS	BY	CH'D	CCO#
1	05/18/09	TRAVELER RAIL MODIFICATIONS	TH	RM	24S0
0	07/20/07	RAIL CHANGE AND MISCELLANEOUS DETAILS	TH	RM	24

REVISIONS

R. Vallzadeh/V. Toan/Y. L./W. L./F. C.
DESIGN OVERSIGHT
SIGN OFF DATE 05/18/09

Rev. Date: 5-18-98

	BY	CHECKED
DESIGN	J. Otter	T. Ho
DETAILS	J. Otter	T. Ho
QUANTITIES	J. Otter	J. Duxbury

PREPARED FOR THE STATE OF CALIFORNIA DEPARTMENT OF TRANSPORTATION

R. Manzanarez
PROJECT ENGINEER

BRIDGE NO. 34-0006L/R
KILOMETER POST 13.2/13.9

SAN FRANCISCO OAKLAND BAY BRIDGE
EAST SPAN SEISMIC SAFETY PROJECT
SELF-ANCHORED SUSPENSION BRIDGE
(SUPERSTRUCTURE & TOWER)

SKYWAY TRAVELER RAIL REPLACEMENT DETAILS NO. 1

ORIGINAL SCALE IN MILLIMETERS FOR REDUCED PLANS 0 10 20 30 40 50 60 70 80 90 100

CU 04
EA 04-012021

DISREGARD PRINTS BEARING EARLIER REVISION DATES 07/20/07

REVISION DATES (PRELIMINARY STAGE ONLY)

SHEET 620SIR1 OF

FILE -> L:\BB\04-012001\SAS\Contract Plans and CCO\CCO\CCO#24S0\2-Revision 05-18-09\DGN\akr1d01a.dgn

USERNAME => dwinrow DATE PLOTTED => 20 MAY 2009 TIME PLOTTED => 08:46:57

DIST.	COUNTY	ROUTE	KILOMETER POST TOTAL PROJECT	SHEET NO.	TOTAL SHEETS
04	SF	80	13.2/13.9	1037S2R1	1204

REGISTERED ENGINEER - CIVIL

07-20-07

PLANS APPROVAL DATE

REGISTERED PROFESSIONAL ENGINEER Tien Hung Ho No. C 43990 Exp. 06/30/09 CIVIL STATE OF CALIFORNIA

The State of California or its officers or agents shall not be responsible for the accuracy or completeness of electronic copies of this plan sheet.

T.Y. LIN / MOFFATT & NICHOL
825 BATTERY STREET
SAN FRANCISCO, CA 94111

Caltrans now has a web site! To get to the web site, go to: http://www.dot.ca.gov

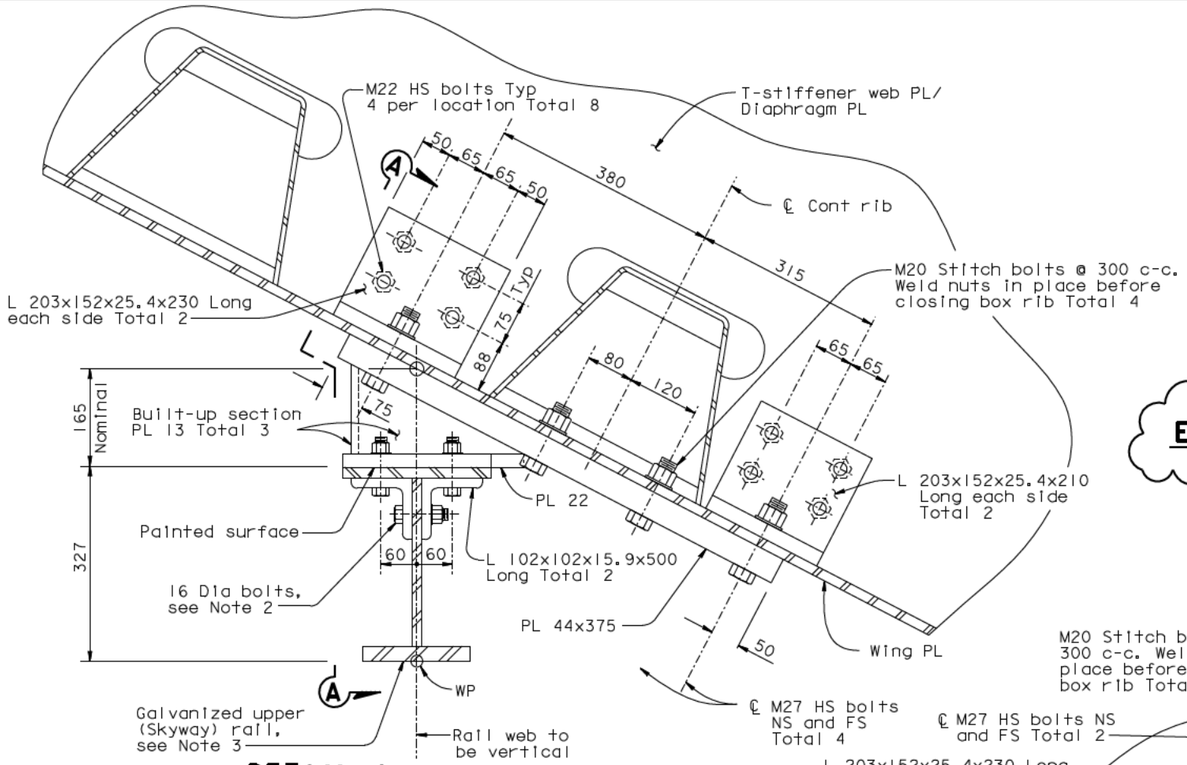

DETAIL A

1:5

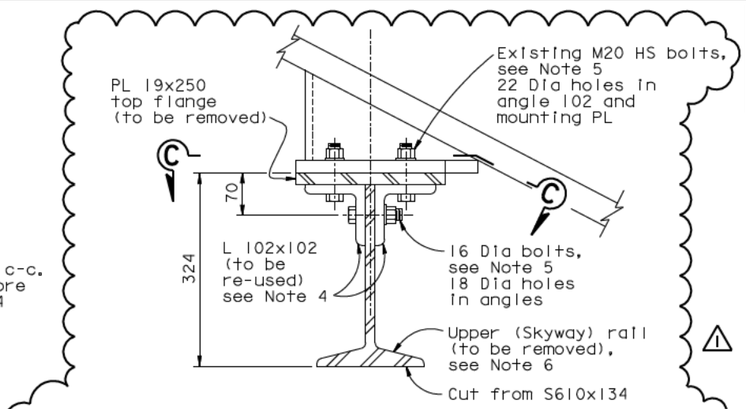

EXISTING AS-BUILT RAIL SECTION DETAIL

1:5

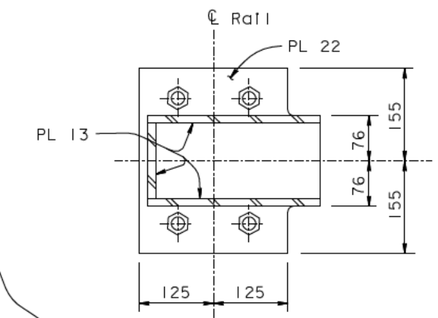

SECTION C-C

1:5

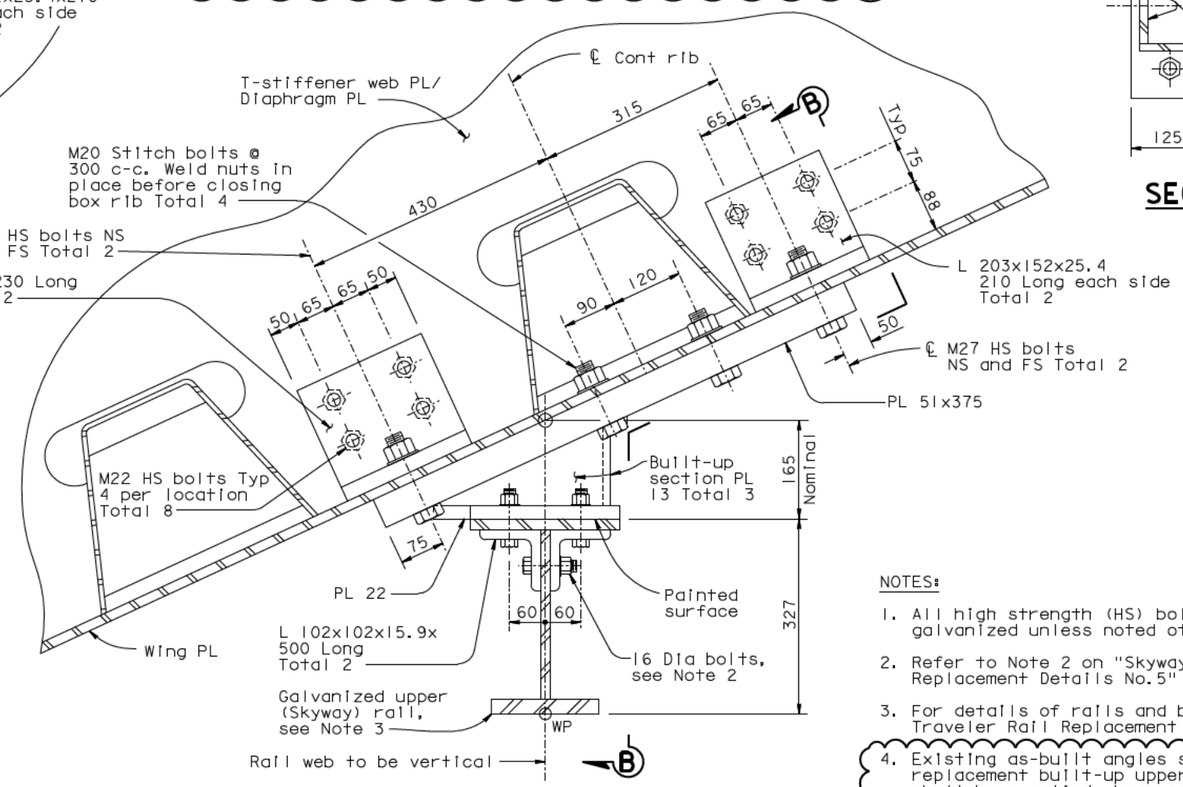

DETAIL B

1:5

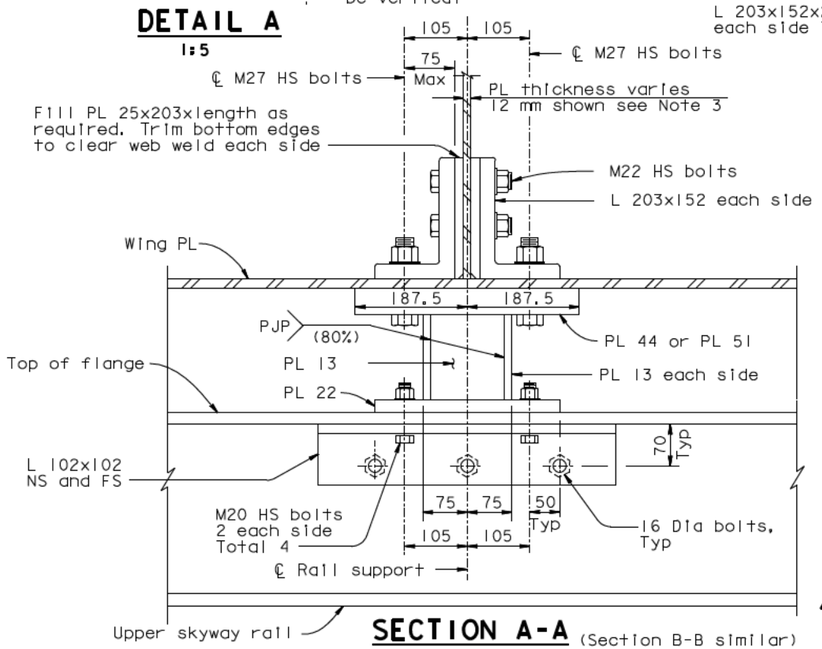

SECTION A-A (Section B-B similar)

1:5

NOTES:

1. All high strength (HS) bolts shall be A325 galvanized unless noted otherwise.
2. Refer to Note 2 on "Skyway Traveler Rail Replacement Details No.5" sheet.
3. For details of rails and bolting, see "Skyway Traveler Rail Replacement Details No.5" sheet.
4. Existing as-built angles shall be re-used with replacement built-up upper rail. New angles shall be supplied where necessary.
5. All existing as-built Skyway bolts, nuts and washers shall be removed and replaced with new HS bolts.
6. Existing rail material (S610 and top flange PL) ASTM A572 Grade 50 (Fy=345 MPa).

REVISION 1 SUPERSEDES REVISION 0

CONTRACT CHANGE ORDER NO. ____
SHEET ___ OF ___

REQUESTS FOR INFORMATION NOT ADDRESSED IN THIS CCO REMAIN IN FORCE

ALL DIMENSIONS ARE IN MILLIMETERS UNLESS OTHERWISE SHOWN

MARK	DATE	DESCRIPTIONS	BY	CH'D	CCO#
1	05/18/09	TRAVELER RAIL MODIFICATIONS	TH	RM	24S0
0	07/20/07	RAIL CHANGE AND MISCELLANEOUS DETAILS	TH	RM	24

REVISIONS

R. Valizadeh/V. Toan/Y.L./W.L./F.C.
DESIGN OVERSIGHT
SIGN OFF DATE 05/18/09

Rev. Date: 5-18-98

	BY	CHECKED
DESIGN	J. Otter	T. Ho
DETAILS	J. Otter	T. Ho
QUANTITIES	J. Otter	J. Duxbury

PREPARED FOR THE STATE OF CALIFORNIA DEPARTMENT OF TRANSPORTATION

R. Manzanarez
PROJECT ENGINEER

BRIDGE NO. 34-0006L/R
KILOMETER POST 13.2/13.9

CU 04
EA 04-012021

ORIGINAL SCALE IN MILLIMETERS FOR REDUCED PLANS 0 10 20 30 40 50 60 70 80 90 100

DISREGARD PRINTS BEARING EARLIER REVISION DATES 07/20/07

SAN FRANCISCO OAKLAND BAY BRIDGE
EAST SPAN SEISMIC SAFETY PROJECT
SELF-ANCHORED SUSPENSION BRIDGE
(SUPERSTRUCTURE & TOWER)

SKYWAY TRAVELER RAIL REPLACEMENT DETAILS NO. 2

SHEET 620S2R OF

FILE -> I:\bb\04-012001\sas\contract plans and cco\cco\cco#24s0\2-revision 05-18-09\dgn\akr1d02a.dgn

USERNAME => dwinrow DATE PLOTTED => 19 MAY 2009 TIME PLOTTED => 16:24:49

DIST.	COUNTY	ROUTE	KILOMETER POST TOTAL PROJECT	SHEET NO.	TOTAL SHEETS
04	SF	80	13.2/13.9	1037S3R1	1204

REGISTERED ENGINEER - CIVIL

07-20-07

PLANS APPROVAL DATE

REGISTERED PROFESSIONAL ENGINEER Tien Hung Ho No. C 43990 Exp. 06/30/09 CIVIL STATE OF CALIFORNIA

The State of California or its officers or agents shall not be responsible for the accuracy or completeness of electronic copies of this plan sheet.

T.Y. LIN / MOFFATT & NICHOL
825 BATTERY STREET
SAN FRANCISCO, CA 94111

Caltrans now has a web site! To get to the web site, go to: http://www.dot.ca.gov

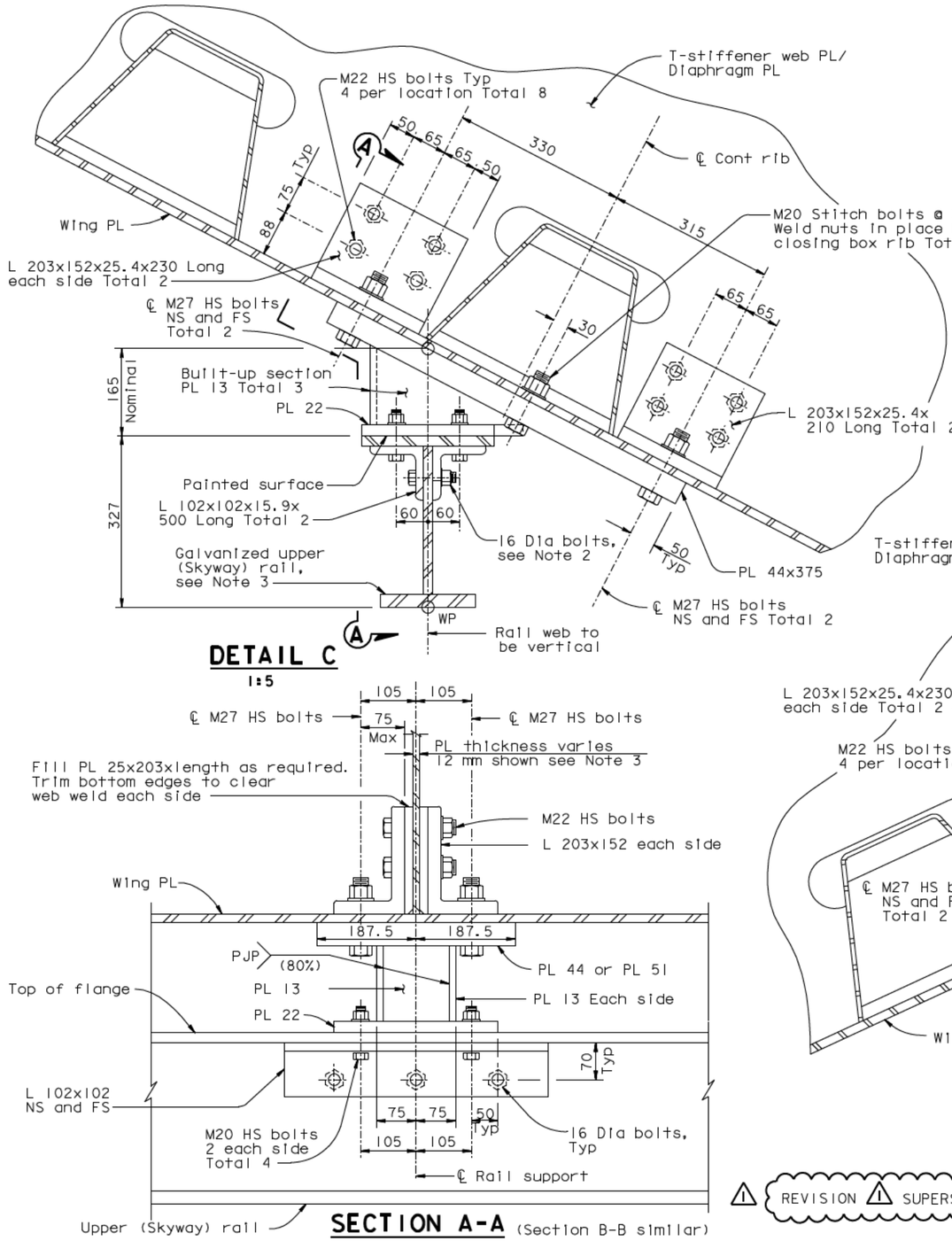

DETAIL C
1:5

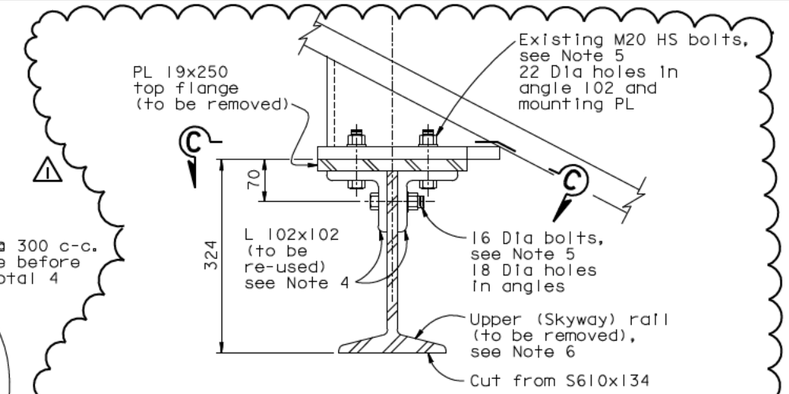

EXISTING AS-BUILT RAIL SECTION DETAIL
1:5

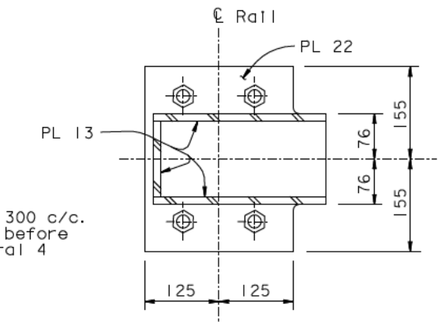

SECTION C-C
1:5

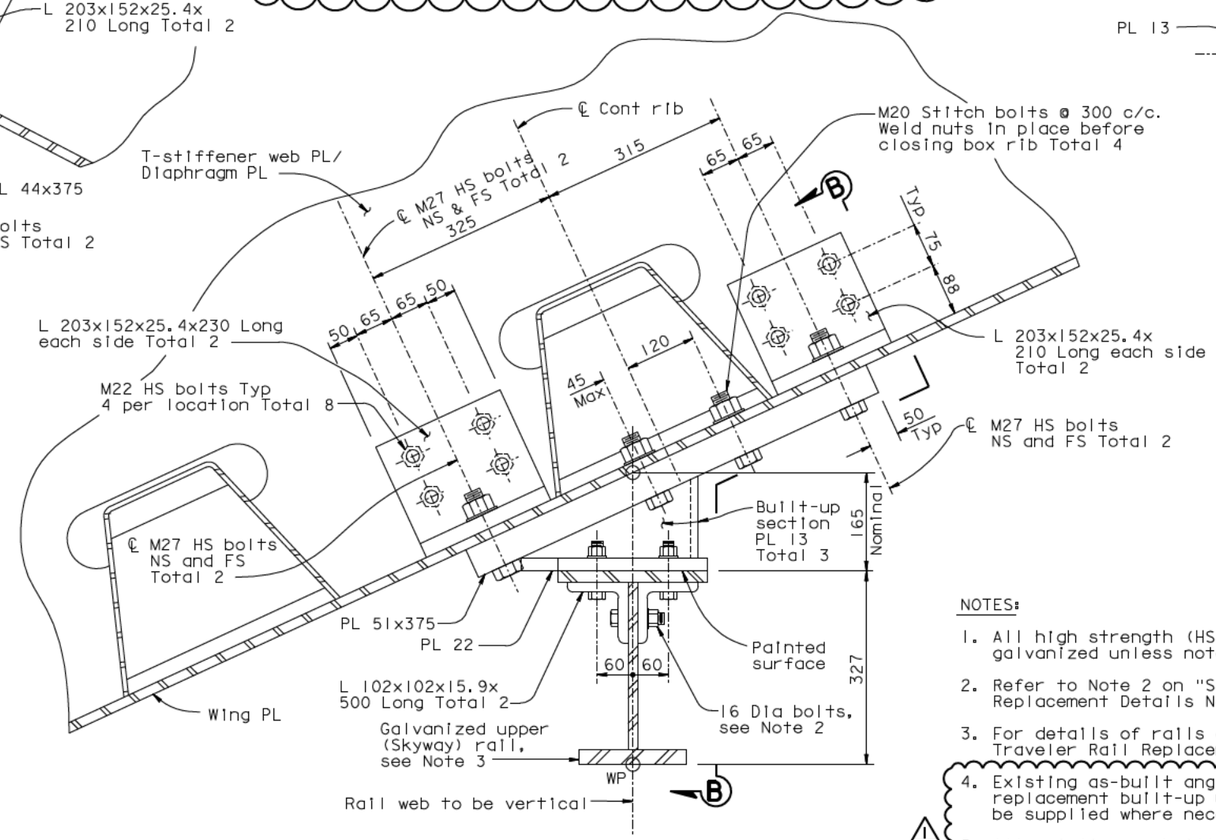

DETAIL D
1:5

SECTION A-A (Section B-B similar)
1:5

NOTES:

1. All high strength (HS) bolts shall be A325 galvanized unless noted otherwise.
2. Refer to Note 2 on "Skyway Traveler Rail Replacement Details No.5" sheet.
3. For details of rails and bolting, see "Skyway Traveler Rail Replacement Details No.5" sheet.
4. Existing as-built angles shall be re-used with replacement built-up upper rail. New angles shall be supplied where necessary.
5. All existing as-built Skyway bolts, nuts and washers shall be removed and replaced with new HS bolts.
6. Existing rail material (S610 and top flange PL) ASTM A572 Grade 50 (Fy=345 MPa).

REVISION △1 SUPERSEDES REVISION △0

CONTRACT CHANGE ORDER NO. ____
SHEET ___ OF ___

REQUESTS FOR INFORMATION NOT ADDRESSED IN THIS CCO REMAIN IN FORCE

ALL DIMENSIONS ARE IN MILLIMETERS UNLESS OTHERWISE SHOWN

MARK	DATE	DESCRIPTIONS	BY	CH'D	CCO#
1	05/18/09	TRAVELER RAIL MODIFICATIONS	TH	RM	24S0
0	07/20/07	RAIL CHANGE AND MISCELLANEOUS DETAILS	TH	RM	24

REVISIONS

R. Valizadeh/V. Toan/Y.L./W.L./F.C.
DESIGN OVERSIGHT
SIGN OFF DATE 05/18/09

	BY	CHECKED
DESIGN	J. Otter	T. Ho
DETAILS	J. Otter	T. Ho
QUANTITIES	J. Otter	J. Duxbury

PREPARED FOR THE STATE OF CALIFORNIA DEPARTMENT OF TRANSPORTATION

R. Manzanarez
PROJECT ENGINEER

BRIDGE NO. 34-0006L/R
KILOMETER POST 13.2/13.9

SAN FRANCISCO OAKLAND BAY BRIDGE
EAST SPAN SEISMIC SAFETY PROJECT
SELF-ANCHORED SUSPENSION BRIDGE (SUPERSTRUCTURE & TOWER)

SKYWAY TRAVELER RAIL REPLACEMENT DETAILS NO. 3

Rev. Date: 5-18-98

ORIGINAL SCALE IN MILLIMETERS FOR REDUCED PLANS 0 10 20 30 40 50 60 70 80 90 100

CU 04
EA 04-012021

DISREGARD PRINTS BEARING EARLIER REVISION DATES

REVISION DATES (PRELIMINARY STAGE ONLY) 07/20/07

SHEET 620S3R1 OF

FILE -> I:\bb\04-012001\sas\contract plans and cco\cco\cco#24s0\2-revision 05-18-09\dgn\akr1d03a.dgn

USERNAME => dwinrow DATE PLOTTED => 19 MAY 2009 TIME PLOTTED => 16:25:56

DIST.	COUNTY	ROUTE	KILOMETER POST TOTAL PROJECT	SHEET NO.	TOTAL SHEETS
04	SF	80	13.2/13.9	1037S4R1	1204

Caltrans Metric

REGISTERED ENGINEER - CIVIL

07-20-07

PLANS APPROVAL DATE

REGISTERED PROFESSIONAL ENGINEER Tien Hung Ho No. C 43990 Exp. 06/30/09 CIVIL STATE OF CALIFORNIA

The State of California or its officers or agents shall not be responsible for the accuracy or completeness of electronic copies of this plan sheet.

T.Y. LIN / MOFFATT & NICHOL
825 BATTERY STREET
SAN FRANCISCO, CA 94111

Caltrans now has a web site! To get to the web site, go to: http://www.dot.ca.gov

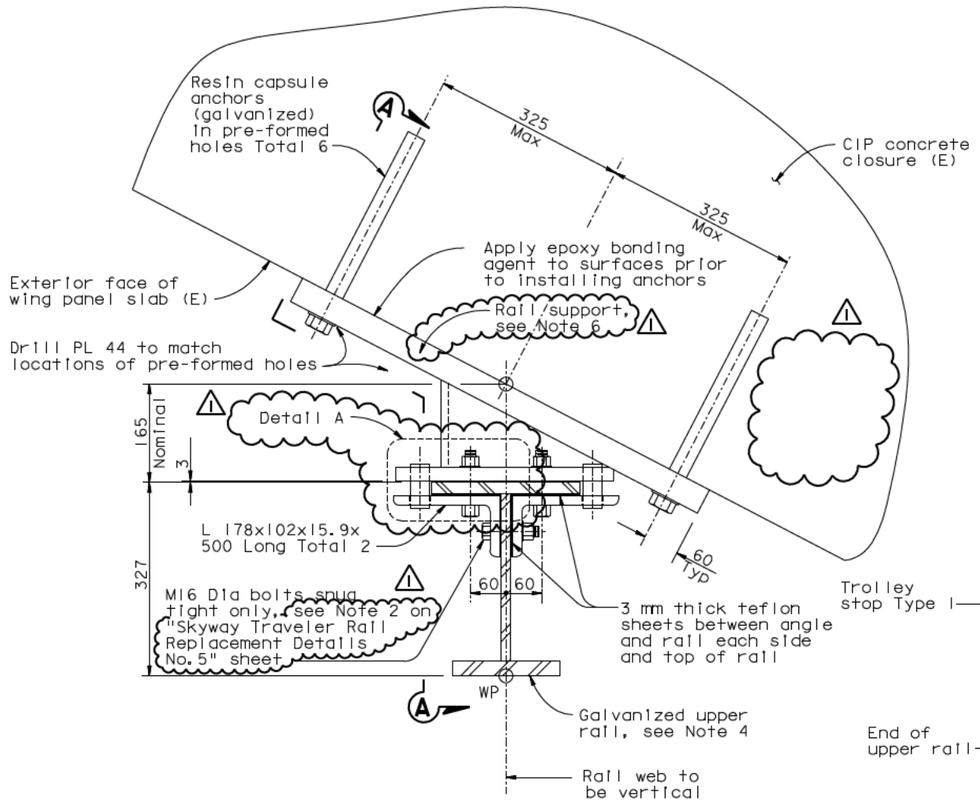

UPPER RAIL SUPPORT DETAILS AT CIP CONCRETE CLOSURE

1:5

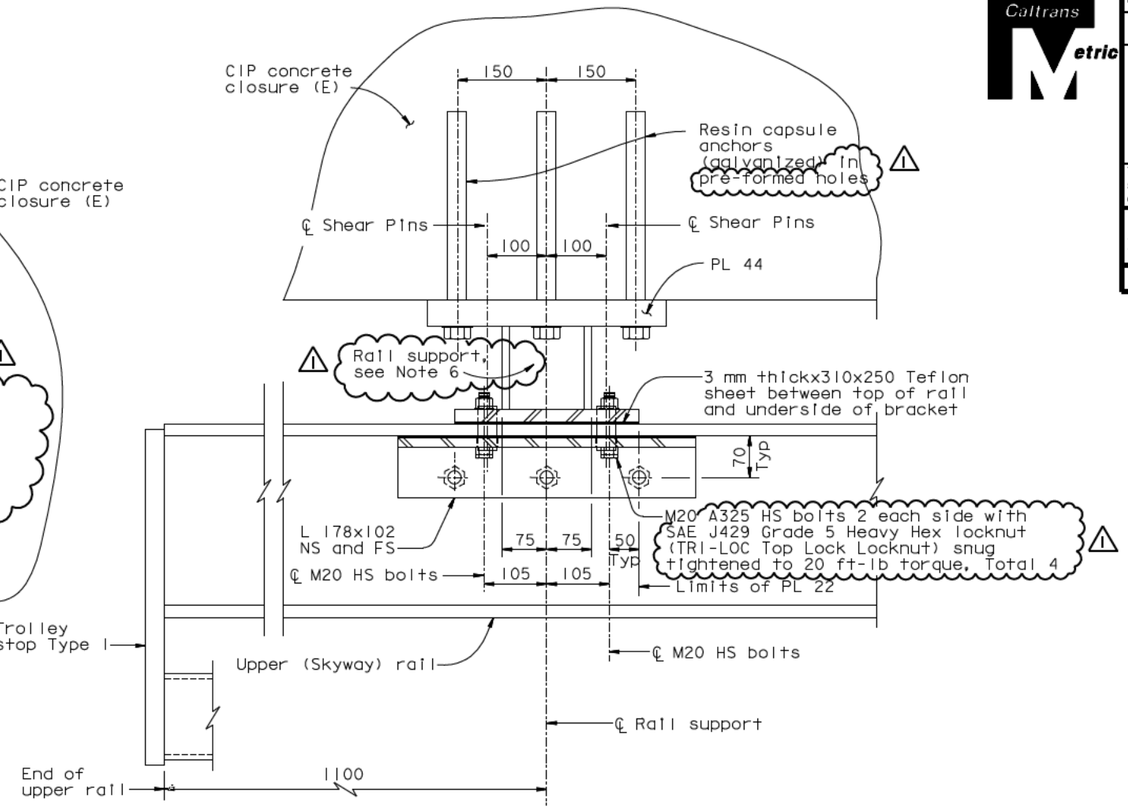

SECTION A-A

1:5

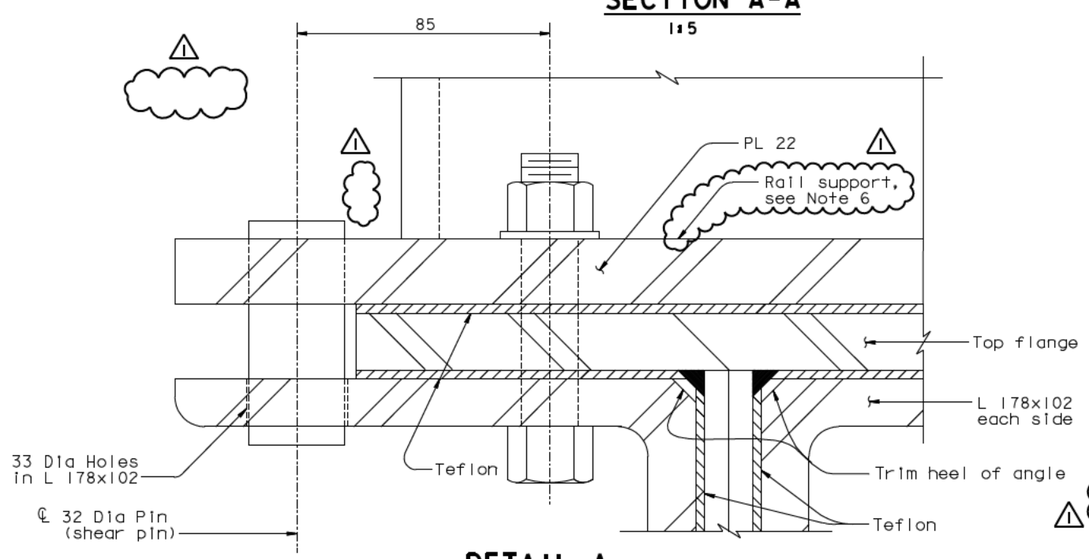

DETAIL A

1:1

Anchor Notes:

1. Anchors shall be installed in existing pre-formed holes in concrete. Holes shall be clean of all materials.
2. Minimum working loads per resin anchor (galvanized) shall be as follows:
   100 kN in Tension
   60 kN in Shear
   Shear and Tension applied non-concurrently.
3. Safety Factor against listed working loads shall be 3.0 minimum.
4. Anchors shall be installed in accordance with the manufacturer's recommendations.

NOTES:

1. All high strength (HS) bolts shall be A325 galvanized unless noted otherwise.
2. Details similar at all rail support locations within concrete closure.
3. For locations of upper rail work points (WP), see "Skyway Traveler Rail Replacement Details No. 1" sheet.
4. For details of rails and bolting, see "Skyway Traveler Rail Replacement Details No. 5" sheet.
5. For Trolley Stop Type I see "Skyway Traveler Rail Replacement Details No. 6" sheet.
6. State to furnish four (4) upper rail supports; Contractor to install.

REVISION 1 SUPERSEDES REVISION 0

CONTRACT CHANGE ORDER NO. ____
SHEET ___ OF ___

REQUESTS FOR INFORMATION NOT ADDRESSED IN THIS CCO REMAIN IN FORCE

ALL DIMENSIONS ARE IN MILLIMETERS UNLESS OTHERWISE SHOWN

R. Vallizadeh/V. Toan/Y.L./W.L./F.C.
DESIGN OVERSIGHT
SIGN OFF DATE 05/18/09

MARK	DATE	DESCRIPTIONS	BY	CH'D	CCO#
1	05/18/09	TRAVELER RAIL MODIFICATIONS	TH	RM	24S0
0	07/20/07	RAIL CHANGE AND MISCELLANEOUS DETAILS	TH	RM	24

REVISIONS

	BY	CHECKED
DESIGN	J. Otter	T. Ho
DETAILS	J. Otter	T. Ho
QUANTITIES	J. Otter	J. Duxbury

PREPARED FOR THE STATE OF CALIFORNIA DEPARTMENT OF TRANSPORTATION

R. Manzanarez
PROJECT ENGINEER

BRIDGE NO. 34-0006L/R
KILOMETER POST 13.2/13.9

SAN FRANCISCO OAKLAND BAY BRIDGE
EAST SPAN SEISMIC SAFETY PROJECT
SELF-ANCHORED SUSPENSION BRIDGE (SUPERSTRUCTURE & TOWER)

SKYWAY TRAVELER RAIL REPLACEMENT DETAILS NO. 4

Rev. Date: 5-18-98

ORIGINAL SCALE IN MILLIMETERS FOR REDUCED PLANS 0 10 20 30 40 50 60 70 80 90 100

CU 04
EA 04-012021

DISREGARD PRINTS BEARING EARLIER REVISION DATES 07/20/07

REVISION DATES (PRELIMINARY STAGE ONLY)

SHEET 620S4R1 OF

FILE -> I:\bb\04-012001\sas\contract plans and cco\cco\cco#24s0\2-revision 05-18-09\dgn\akr1d04a.dgn

USERNAME => dwinrow DATE PLOTTED => 19 MAY 2009 TIME PLOTTED => 16:27:13

DIST.	COUNTY	ROUTE	KILOMETER POST TOTAL PROJECT	SHEET NO.	TOTAL SHEETS
04	SF	80	13.2/13.9	1037S5R1	1204

Caltrans Metric

REGISTERED ENGINEER - CIVIL

07-20-07

PLANS APPROVAL DATE

REGISTERED PROFESSIONAL ENGINEER Tien Hung Ho No. C 43990 Exp. 06/30/09 CIVIL STATE OF CALIFORNIA

The State of California or its officers or agents shall not be responsible for the accuracy or completeness of electronic copies of this plan sheet.

T.Y. LIN / MOFFATT & NICHOL
825 BATTERY STREET
SAN FRANCISCO, CA 94111

Caltrans now has a web site! To get to the web site, go to: http://www.dot.ca.gov

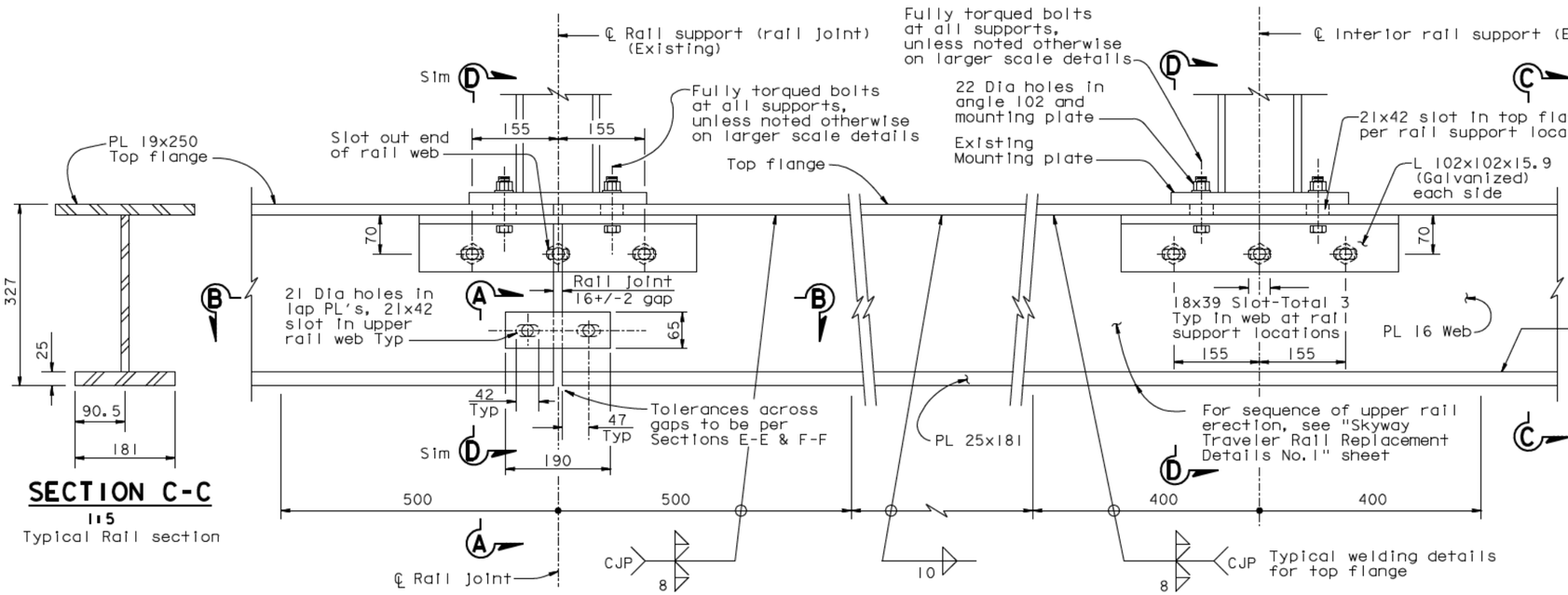

SECTION C-C
1:5
Typical Rail section

AT ENDS OF RAIL SECTIONS
Slot and hole sizes as for interior supports UNO

BETWEEN SUPPORTS

AT INTERIOR SUPPORTS

ELEVATION
1:5
(RAIL FABRICATION AND ATTACHMENT DETAILS)

Note: Details shown for slotted holes, rail joint and welding are typical for all upper rails.

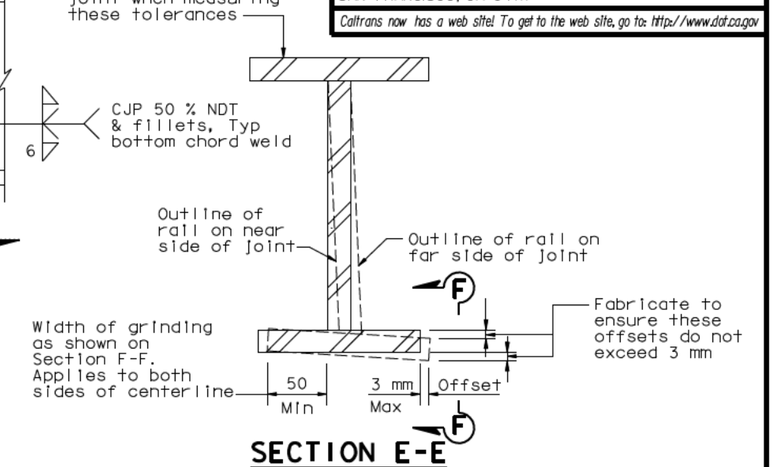

SECTION E-E
NTS

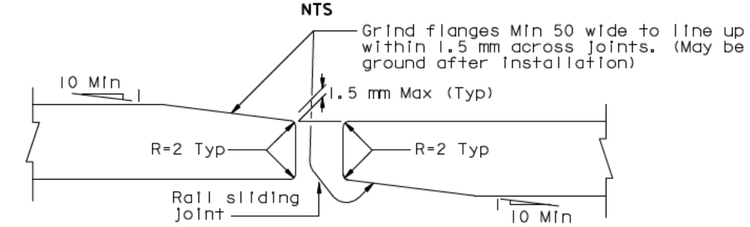

SECTION F-F
NTS

(Tolerances at rail sliding joints)

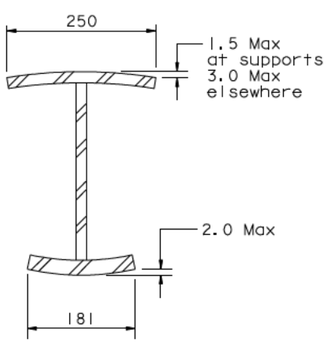

MAXIMUM ALLOWABLE FLANGE DEFORMATIONS
NTS

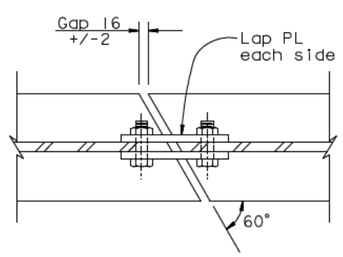

SECTION B-B
1:5
Note: Details of rail joint typical.

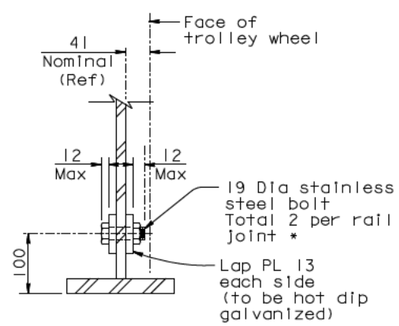

SECTION A-A
1:5

* Use low height bolt head and nut. Install nut with thread locking compound.

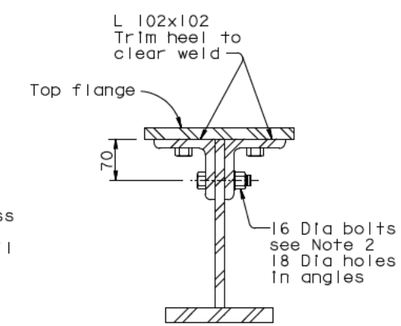

SECTION D-D
1:5

NOTES:

1. Rail and angles 102x102x15.9 and lap plates are to be hot dip galvanized.
2. 16 diameter bolts through angle legs
   - At interior supports : Single A325 nut, bolt to be fully tensioned.
   - At rail joint supports : A325 bolt, SAE J429 Grade 5 Heavy Hex locknut (TRI-LOC Top Lock Locknut) snug tightened to 12 ft-lb torque.
3. All rail material to be ASTM A572 Grade 50 (Fy=345 MPa).

REVISION 1 SUPERSEDES REVISION 0

CONTRACT CHANGE ORDER NO. ____
SHEET ___ OF ___

REQUESTS FOR INFORMATION NOT ADDRESSED IN THIS CCO REMAIN IN FORCE

ALL DIMENSIONS ARE IN MILLIMETERS UNLESS OTHERWISE SHOWN

R. Valizadeh/V. Toan/Y.L./W.L./F.C.
DESIGN OVERSIGHT
Ron Valizadeh / Vong Toan / Y. Liu
SIGN OFF DATE 05/18/09

MARK	DATE	DESCRIPTIONS	BY	CH'D	CCO#
1	05/18/09	TRAVELER RAIL MODIFICATIONS	TH	RM	24S0
0	07/20/07	RAIL CHANGE AND MISCELLANEOUS DETAILS	TH	RM	24

REVISIONS

	BY	CHECKED
DESIGN	J. Otter	T. Ho
DETAILS	J. Otter	T. Ho
QUANTITIES	J. Otter	J. Duxbury

PREPARED FOR THE STATE OF CALIFORNIA DEPARTMENT OF TRANSPORTATION

R. Manzanarez
PROJECT ENGINEER

BRIDGE NO. 34-0006L/R
KILOMETER POST 13.2/13.9

SAN FRANCISCO OAKLAND BAY BRIDGE
EAST SPAN SEISMIC SAFETY PROJECT
SELF-ANCHORED SUSPENSION BRIDGE
(SUPERSTRUCTURE & TOWER)

SKYWAY TRAVELER RAIL REPLACEMENT DETAILS NO.5

Rev. Date: 5-18-98

ORIGINAL SCALE IN MILLIMETERS FOR REDUCED PLANS 0 10 20 30 40 50 60 70 80 90 100

CU 04
EA 04-012021

DISREGARD PRINTS BEARING EARLIER REVISION DATES

REVISION DATES (PRELIMINARY STAGE ONLY) 07/20/07

SHEET 620S5R1 OF

FILE -> I:\bb\04-012001\sas\contract plans and cco\cco\cco#24s0\2-revision 05-18-09\dgn\akr1d05a.dgn

USERNAME => dwinrow DATE PLOTTED => 19 MAY 2009 TIME PLOTTED => 16:28:07

DIST.	COUNTY	ROUTE	KILOMETER POST TOTAL PROJECT	SHEET NO.	TOTAL SHEETS
04	SF	80	13.2/13.9	1037S6R1	1204

Caltrans Metric

REGISTERED ENGINEER - CIVIL

07-20-07

PLANS APPROVAL DATE

REGISTERED PROFESSIONAL ENGINEER Tien Hung Ho No. C 43990 Exp. 06/30/09 CIVIL STATE OF CALIFORNIA

The State of California or its officers or agents shall not be responsible for the accuracy or completeness of electronic copies of this plan sheet.

T.Y. LIN / MOFFATT & NICHOL
825 BATTERY STREET
SAN FRANCISCO, CA 94111

Caltrans now has a web site! To get to the web site, go to: http://www.dot.ca.gov

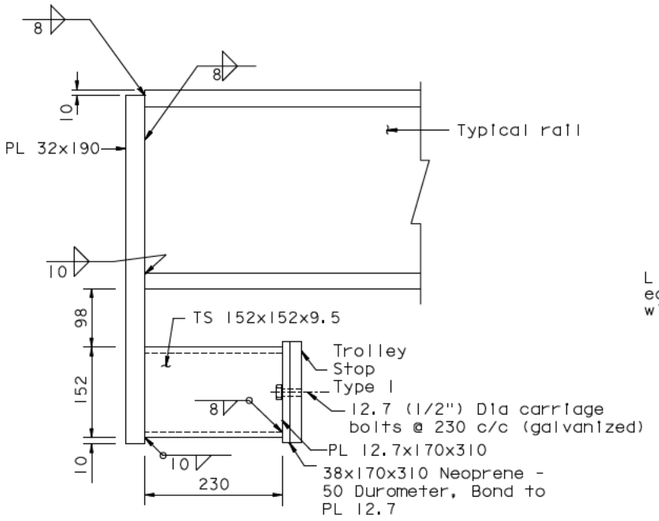

TROLLEY STOP TYPE I DETAIL

1:5

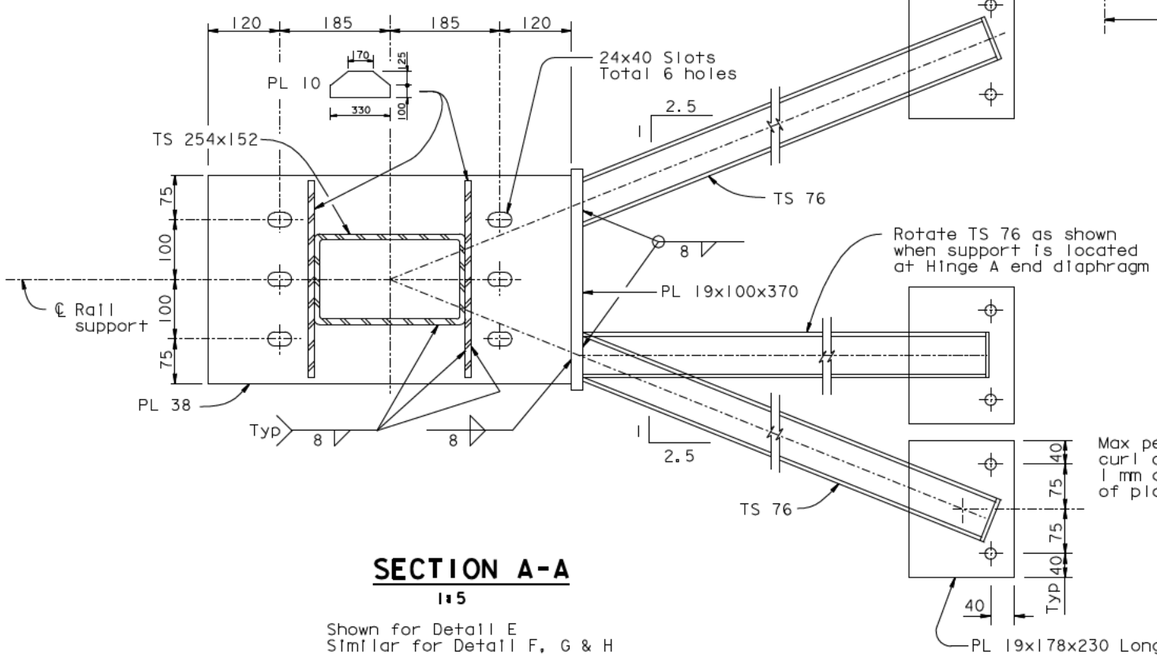

SECTION A-A

1:5

Shown for Detail E
Similar for Detail F, G & H

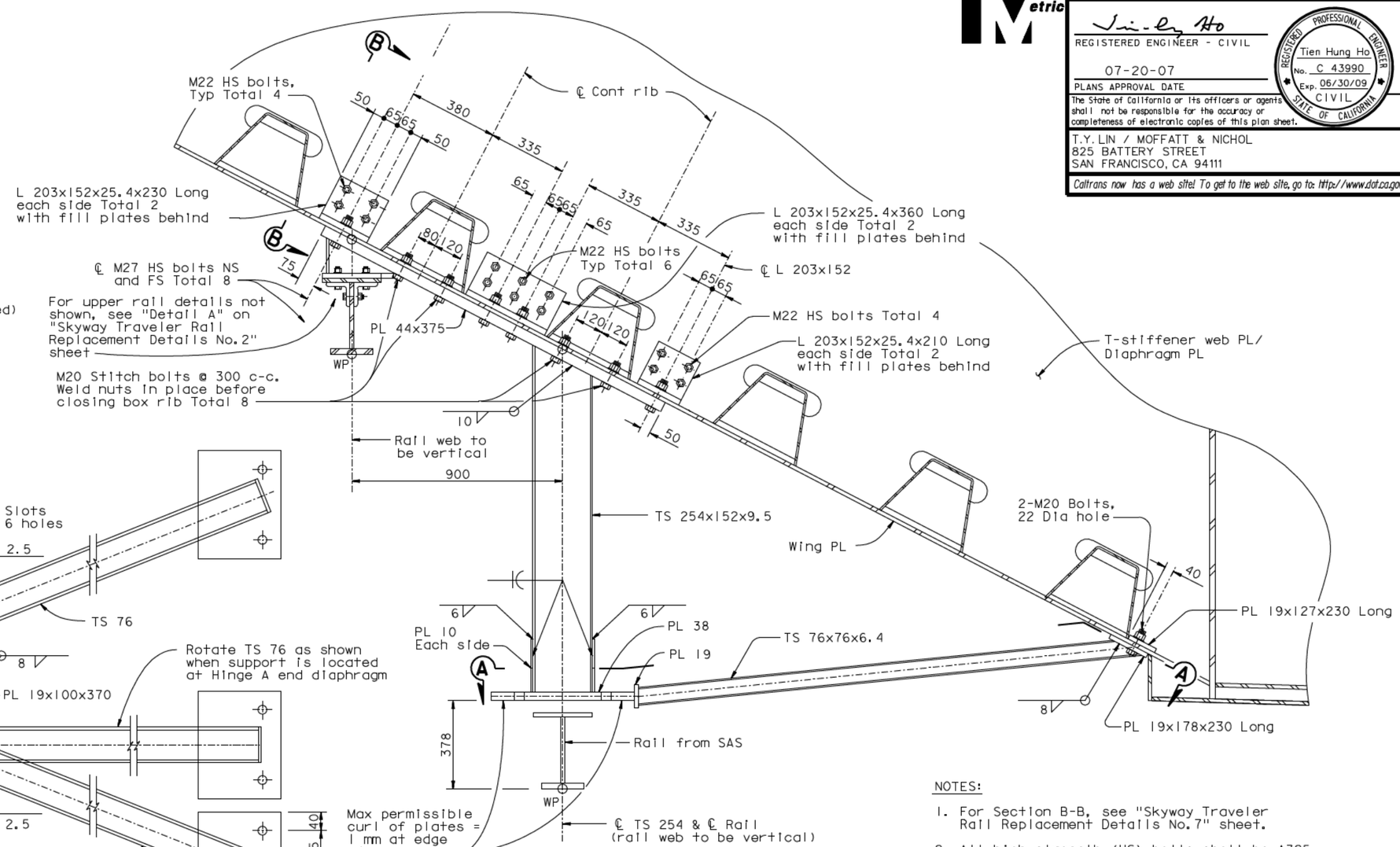

DETAIL E

1:10

NOTES:

1. For Section B-B, see "Skyway Traveler Rail Replacement Details No.7" sheet.
2. All high strength (HS) bolts shall be A325 galvanized unless noted otherwise.
3. For details of rails and bolting, see "Skyway Traveler Rail Replacement Details No.5" sheet.

REVISION 1 SUPERSEDES REVISION 0

CONTRACT CHANGE ORDER NO. ____
SHEET ___ OF ___

REQUESTS FOR INFORMATION NOT ADDRESSED IN THIS CCO REMAIN IN FORCE

ALL DIMENSIONS ARE IN MILLIMETERS UNLESS OTHERWISE SHOWN

R. Vallzadeh/V. Toan/Y.L./W.L./F.C.
DESIGN OVERSIGHT
SIGN OFF DATE 05/18/09

MARK	DATE	DESCRIPTIONS	BY	CH'D	CCO#
1	05/18/09	TRAVELER RAIL MODIFICATIONS	TH	RM	2450
0	07/20/07	RAIL CHANGE AND MISCELLANEOUS DETAILS	TH	RM	24

REVISIONS

DESIGN	BY J. Otter	CHECKED T. Ho	
DETAILS	BY J. Otter	CHECKED T. Ho	
QUANTITIES	BY J. Otter	CHECKED J. Duxbury	

PREPARED FOR THE STATE OF CALIFORNIA DEPARTMENT OF TRANSPORTATION

R. Manzanarez
PROJECT ENGINEER

BRIDGE NO. 34-0006L/R
KILOMETER POST 13.2/13.9

SAN FRANCISCO OAKLAND BAY BRIDGE
EAST SPAN SEISMIC SAFETY PROJECT
SELF-ANCHORED SUSPENSION BRIDGE (SUPERSTRUCTURE & TOWER)

SKYWAY TRAVELER RAIL REPLACEMENT DETAILS NO.6

Rev. Date: 5-18-98

ORIGINAL SCALE IN MILLIMETERS FOR REDUCED PLANS 0 10 20 30 40 50 60 70 80 90 100

CU 04
EA 04-012021

DISREGARD PRINTS BEARING EARLIER REVISION DATES

REVISION DATES (PRELIMINARY STAGE ONLY) 07/20/07

SHEET 620S6R1 OF

FILE -> I:\bb\04-012001\sas\contract plans and cco\cco\cco#24s0\2-revision 05-18-09\dgn\akr1d06a.dgn

USERNAME => dwinrow DATE PLOTTED => 19 MAY 2009 TIME PLOTTED => 16:29:34

DIST.	COUNTY	ROUTE	KILOMETER POST TOTAL PROJECT	SHEET NO.	TOTAL SHEETS
04	SF	80	13.2/13.9	1037STR	1204

Caltrans Metric

REGISTERED ENGINEER - CIVIL

07-20-07

PLANS APPROVAL DATE

REGISTERED PROFESSIONAL ENGINEER Tien Hung Ho No. C 43990 Exp. 06/30/09 CIVIL STATE OF CALIFORNIA

The State of California or its officers or agents shall not be responsible for the accuracy or completeness of electronic copies of this plan sheet.

T.Y. LIN / MOFFATT & NICHOL
825 BATTERY STREET
SAN FRANCISCO, CA 94111

Caltrans now has a web site! To get to the web site, go to: http://www.dot.ca.gov

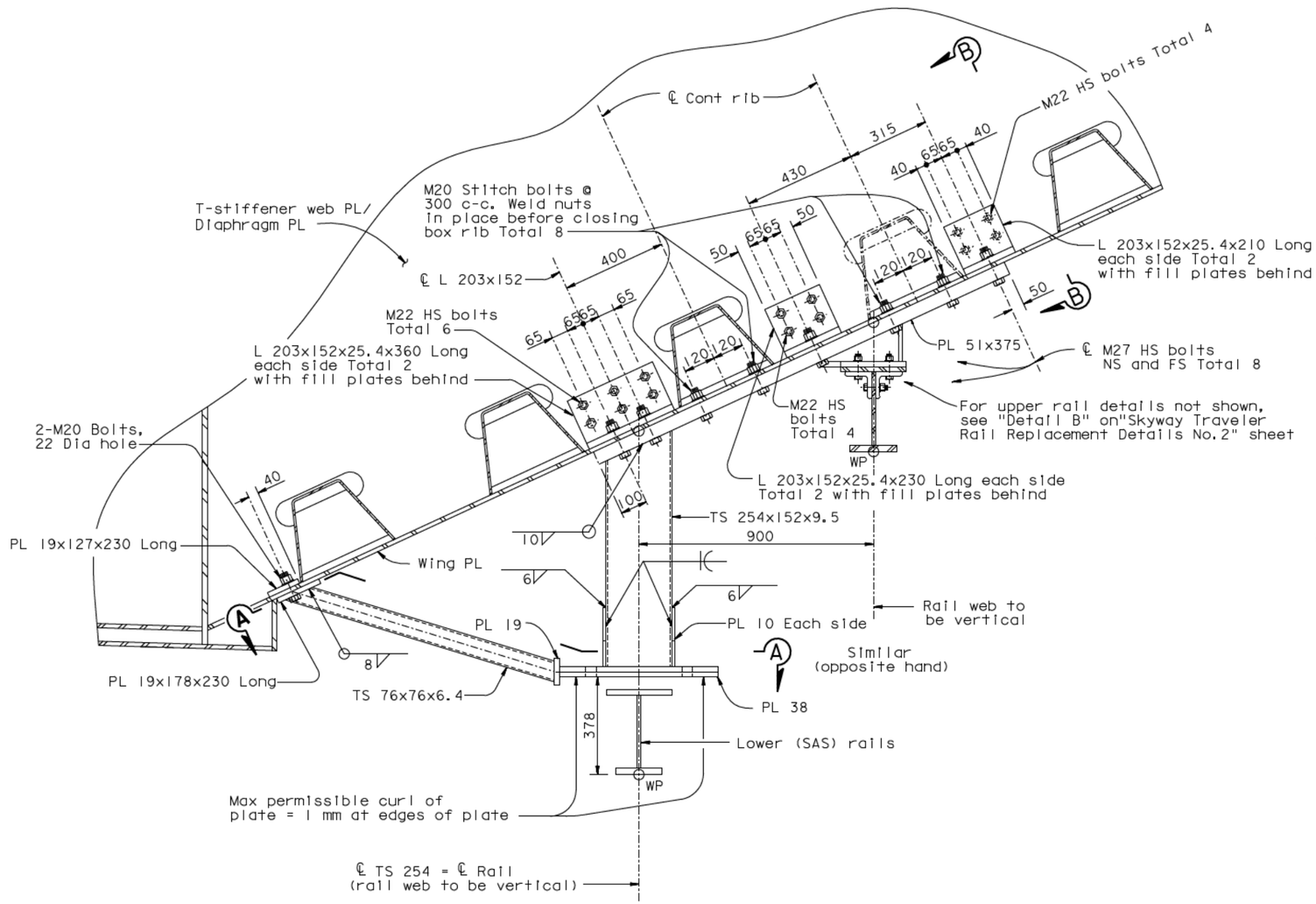

DETAIL F

1:10

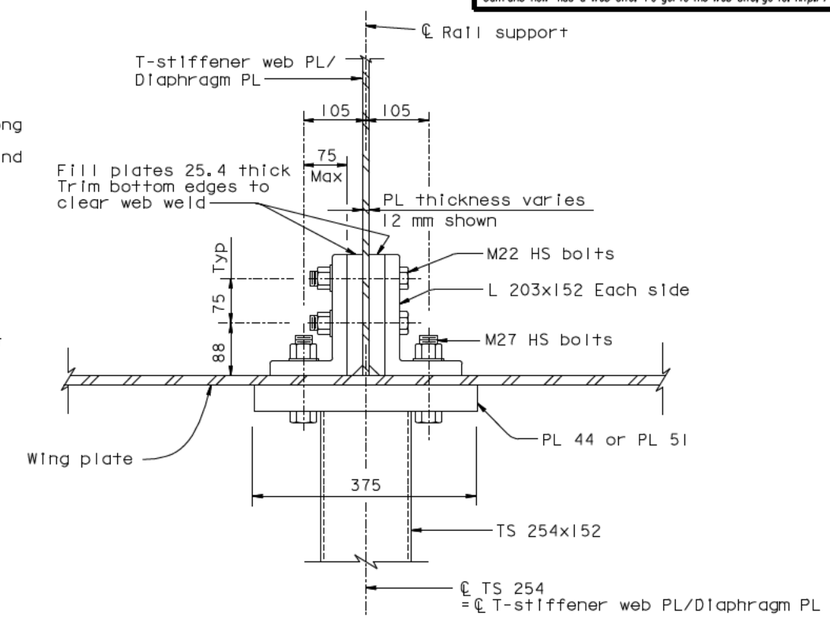

SECTION B-B

1:5

Note: Details shown are typical at all L 203 support locations. Built-up section not shown for clarity.

NOTES:

1. For Section A-A, see "Skyway Traveler Rail Replacement Details No.6" sheet.
2. All high strength (HS) bolts shall be A325 galvanized unless noted otherwise.
3. For detail of rails and bolting, see "Skyway Traveler Rail Replacement Details No.5" sheet.

REVISION 1 SUPERSEDES REVISION 0

CONTRACT CHANGE ORDER NO. ____
SHEET ___ OF ___

REQUESTS FOR INFORMATION NOT ADDRESSED IN THIS CCO REMAIN IN FORCE

ALL DIMENSIONS ARE IN MILLIMETERS UNLESS OTHERWISE SHOWN

MARK	DATE	DESCRIPTIONS	BY	CH'D	CCO#
1	05/18/09	TRAVELER RAIL MODIFICATIONS	TH	RM	24S0
0	07/20/07	RAIL CHANGE AND MISCELLANEOUS DETAILS	TH	RM	24

REVISIONS

R. Vallizadeh/V. Toan/Y.L./W.L./F.C.
DESIGN OVERSIGHT
SIGN OFF DATE 05/18/09

	BY	CHECKED
DESIGN	J. Otter	T. Ho
DETAILS	J. Otter	T. Ho
QUANTITIES	J. Otter	J. Duxbury

PREPARED FOR THE STATE OF CALIFORNIA DEPARTMENT OF TRANSPORTATION

R. Manzanarez
PROJECT ENGINEER

BRIDGE NO. 34-0006L/R
KILOMETER POST 13.2/13.9

SAN FRANCISCO OAKLAND BAY BRIDGE
EAST SPAN SEISMIC SAFETY PROJECT
SELF-ANCHORED SUSPENSION BRIDGE (SUPERSTRUCTURE & TOWER)

SKYWAY TRAVELER RAIL REPLACEMENT DETAILS NO.7

Rev. Date: 5-18-98

ORIGINAL SCALE IN MILLIMETERS FOR REDUCED PLANS 0 10 20 30 40 50 60 70 80 90 100

CU 04
EA 04-012021

DISREGARD PRINTS BEARING EARLIER REVISION DATES 07/20/07

REVISION DATES (PRELIMINARY STAGE ONLY)

SHEET 620STR OF

FILE -> I:\bb\04-012001\sas\contract plans and cco\cco\cco#24s0\2-revision 05-18-09\dgn\akr1d07a.dgn

USERNAME => dwinrow DATE PLOTTED => 19 MAY 2009 TIME PLOTTED => 16:30:41

DIST.	COUNTY	ROUTE	KILOMETER POST TOTAL PROJECT	SHEET NO.	TOTAL SHEETS
04	SF	80	13.2/13.9	1037S8R1	1204

Caltrans Metric

REGISTERED ENGINEER - CIVIL

07-20-07

PLANS APPROVAL DATE

REGISTERED PROFESSIONAL ENGINEER Tien Hung Ho No. C 43990 Exp. 06/30/09 CIVIL STATE OF CALIFORNIA

The State of California or its officers or agents shall not be responsible for the accuracy or completeness of electronic copies of this plan sheet.

T.Y. LIN / MOFFATT & NICHOL
825 BATTERY STREET
SAN FRANCISCO, CA 94111

Caltrans now has a web site! To get to the web site, go to: http://www.dot.ca.gov

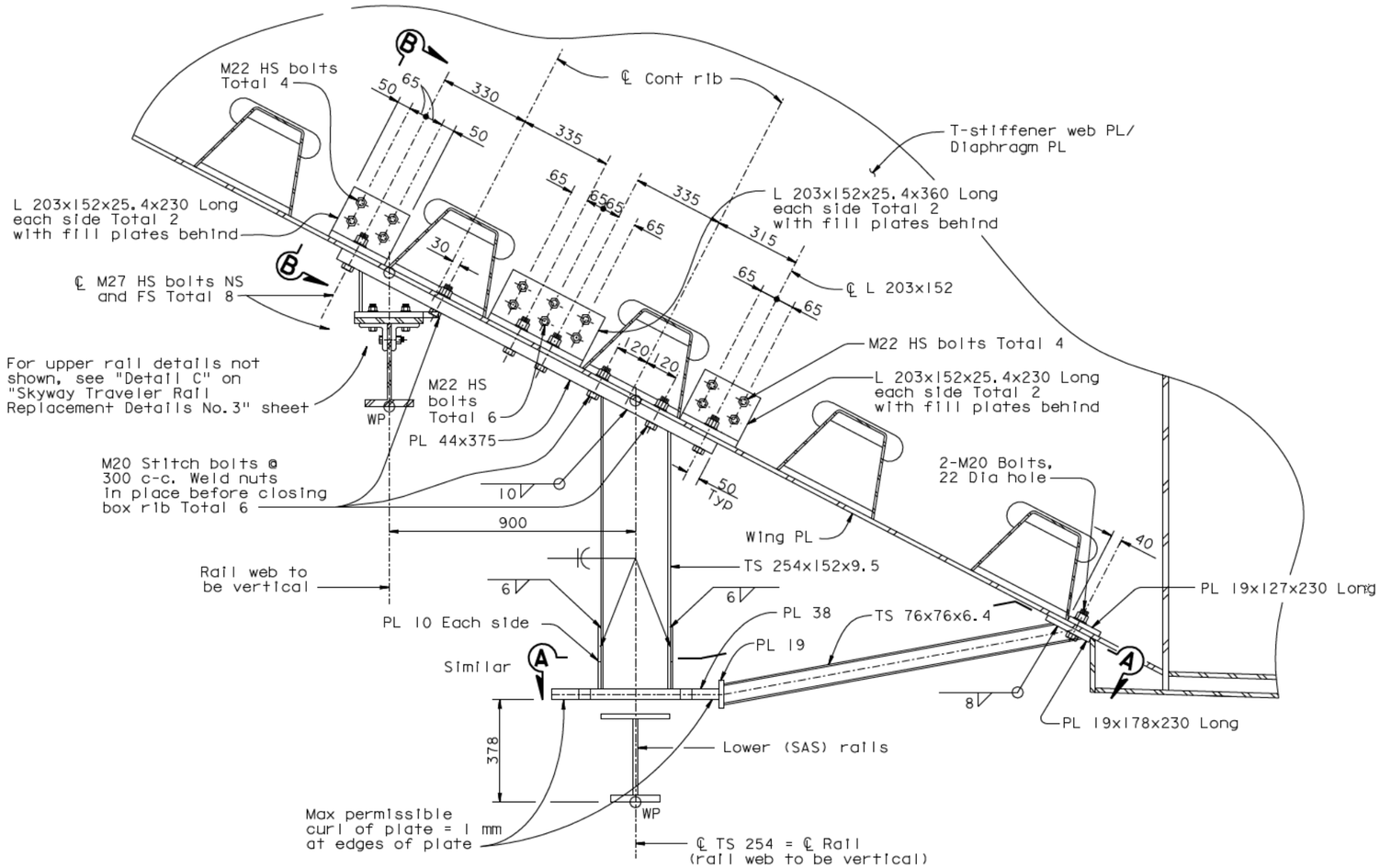

DETAIL G

1:10

NOTES:

1. For Section A-A, see "Skyway Traveler Rail Replacement Details No.6" sheet.
2. For Section B-B, see "Skyway Traveler Rail Replacement Details No.7" sheet.
3. For details of rails and bolting, see "Skyway Traveler Rail Replacement Details No.5" sheet.
4. All high strength (HS) bolts shall be A325 galvanized unless noted otherwise.

REVISION 1 SUPERSEDES REVISION 0

CONTRACT CHANGE ORDER NO. ____
SHEET ___ OF ___

REQUESTS FOR INFORMATION NOT ADDRESSED IN THIS CCO REMAIN IN FORCE

ALL DIMENSIONS ARE IN MILLIMETERS UNLESS OTHERWISE SHOWN

R. Vallizadeh/V. Toan/Y.L./W.L./F.C.
DESIGN OVERSIGHT
SIGN OFF DATE 05/18/09

MARK	DATE	DESCRIPTIONS	BY	CH'D	CCO#
1	05/18/09	TRAVELER RAIL MODIFICATIONS	TH	RM	24S0
0	07/20/07	RAIL CHANGE AND MISCELLANEOUS DETAILS	TH	RM	24

REVISIONS

	BY	CHECKED
DESIGN	J. Otter	T. Ho
DETAILS	J. Otter	T. Ho
QUANTITIES	J. Otter	J. Duxbury

PREPARED FOR THE STATE OF CALIFORNIA DEPARTMENT OF TRANSPORTATION

R. Manzanarez
PROJECT ENGINEER

BRIDGE NO. 34-0006L/R
KILOMETER POST 13.2/13.9

SAN FRANCISCO OAKLAND BAY BRIDGE
EAST SPAN SEISMIC SAFETY PROJECT
SELF-ANCHORED SUSPENSION BRIDGE
(SUPERSTRUCTURE & TOWER)

SKYWAY TRAVELER RAIL REPLACEMENT DETAILS NO.8

Rev. Date: 5-18-98

ORIGINAL SCALE IN MILLIMETERS FOR REDUCED PLANS 0 10 20 30 40 50 60 70 80 90 100

CU 04
EA 04-012021

DISREGARD PRINTS BEARING EARLIER REVISION DATES

REVISION DATES (PRELIMINARY STAGE ONLY) 07/20/07

SHEET 620S8R1 OF

FILE -> I:\bb\04-012001\sas\contract plans and cco\cco\cco#24s0\2-revision 05-18-09\dgn\akr1d08a.dgn

USERNAME => dwinrow DATE PLOTTED => 19 MAY 2009 TIME PLOTTED => 16:31:51

DIST.	COUNTY	ROUTE	KILOMETER POST TOTAL PROJECT	SHEET NO.	TOTAL SHEETS
04	SF	80	13.2/13.9	037S9R1	1204

Caltrans Metric

REGISTERED ENGINEER - CIVIL

07-20-07

PLANS APPROVAL DATE

REGISTERED PROFESSIONAL ENGINEER Tien Hung Ho No. C 43990 Exp. 06/30/09 CIVIL STATE OF CALIFORNIA

The State of California or its officers or agents shall not be responsible for the accuracy or completeness of electronic copies of this plan sheet.

T.Y. LIN / MOFFATT & NICHOL
825 BATTERY STREET
SAN FRANCISCO, CA 94111

Caltrans now has a web site! To get to the web site, go to: http://www.dot.ca.gov

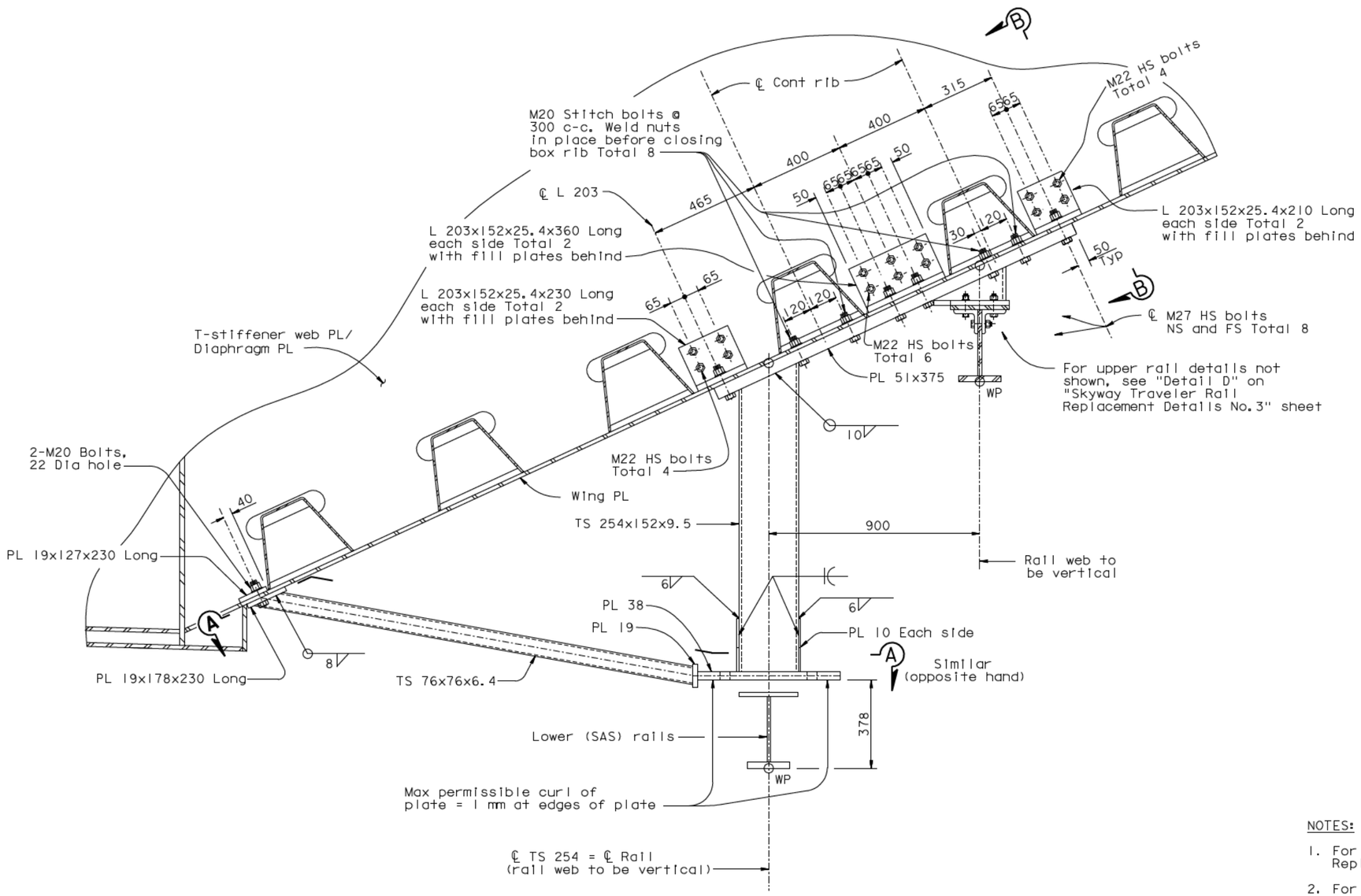

DETAIL H

1:10

NOTES:

1. For Section A-A, see "Skyway Traveler Rail Replacement Details No.6" sheet.
2. For Section B-B, see "Skyway Traveler Rail Replacement Details No.7" sheet.
3. For details of rails and bolting, see "Skyway Traveler Rail Replacement Details No.5" sheet.
4. All high strength (HS) bolts shall be A325 galvanized unless noted otherwise.

REVISION 1 SUPERSEDES REVISION 0

CONTRACT CHANGE ORDER NO. ____
SHEET ___ OF ___

REQUESTS FOR INFORMATION NOT ADDRESSED IN THIS CCO REMAIN IN FORCE

ALL DIMENSIONS ARE IN MILLIMETERS UNLESS OTHERWISE SHOWN

MARK	DATE	DESCRIPTIONS	BY	CH'D	CCO#
1	05/18/09	TRAVELER RAIL MODIFICATIONS	TH	RM	24S0
0	07/20/07	RAIL CHANGE AND MISCELLANEOUS DETAILS	TH	RM	24

REVISIONS

R. Vallizadeh/V. Toan/Y.L./W.L./F.C.
DESIGN OVERSIGHT
SIGN OFF DATE 05/18/09

	BY	CHECKED
DESIGN	J. Otter	T. Ho
DETAILS	J. Otter	T. Ho
QUANTITIES	J. Otter	J. Duxbury

PREPARED FOR THE STATE OF CALIFORNIA DEPARTMENT OF TRANSPORTATION

R. Manzanarez
PROJECT ENGINEER

BRIDGE NO. 34-0006L/R
KILOMETER POST 13.2/13.9

SAN FRANCISCO OAKLAND BAY BRIDGE
EAST SPAN SEISMIC SAFETY PROJECT
SELF-ANCHORED SUSPENSION BRIDGE
(SUPERSTRUCTURE & TOWER)

SKYWAY TRAVELER RAIL REPLACEMENT DETAILS NO.9

Rev. Date: 5-18-98

ORIGINAL SCALE IN MILLIMETERS FOR REDUCED PLANS 0 10 20 30 40 50 60 70 80 90 100

CU 04
EA 04-012021

DISREGARD PRINTS BEARING EARLIER REVISION DATES 07/20/07

REVISION DATES (PRELIMINARY STAGE ONLY)

SHEET 620S9R1 OF

FILE -> I:\bb\04-012001\sas\contract plans and cco\cco\cco#24s0\2-revision 05-18-09\dgn\akr1d09a.dgn

USERNAME => dwinrow DATE PLOTTED => 19 MAY 2009 TIME PLOTTED => 16:33:04

DIST.	COUNTY	ROUTE	KILOMETER POST TOTAL PROJECT	SHEET NO.	TOTAL SHEETS
04	SF	80	13.2/13.9	1120R3	1204

Caltrans Metric

George Baker
REGISTERED ENGINEER - CIVIL
12-6-04
PLANS APPROVAL DATE

REGISTERED PROFESSIONAL ENGINEER George S. Baker No. C 57112 Exp. 12/31/05 CIVIL STATE OF CALIFORNIA

The State of California or its officers or agents shall not be responsible for the accuracy or completeness of electronic copies of this plan sheet.

T.Y. LIN / MOFFATT & NICHOL
825 BATTERY STREET
SAN FRANCISCO, CA 94111

Caltrans now has a web site! To get to the web site, go to: http://www.dot.ca.gov

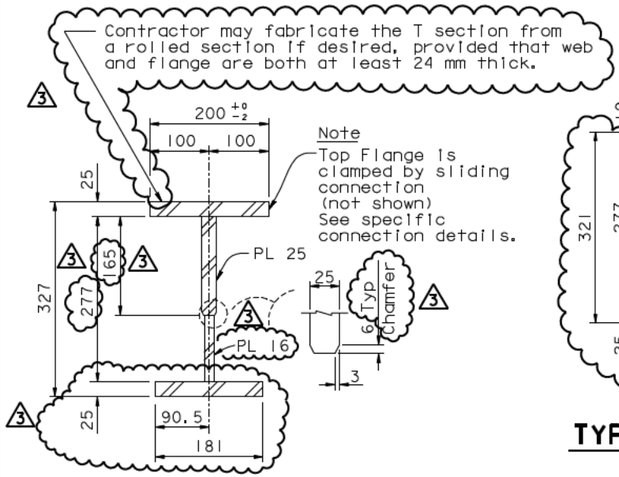

RAIL SECTION AT SLIDING JOINTS
SECTION A-A
1:5

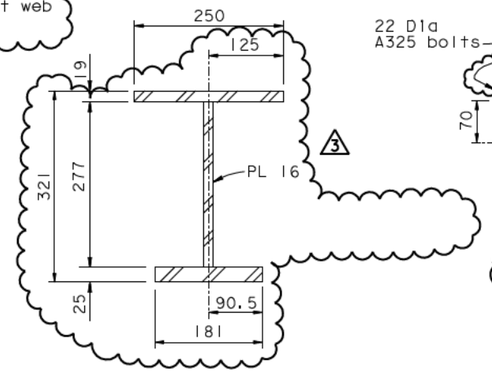

TYPICAL RAIL SECTION
SECTION B-B
1:5

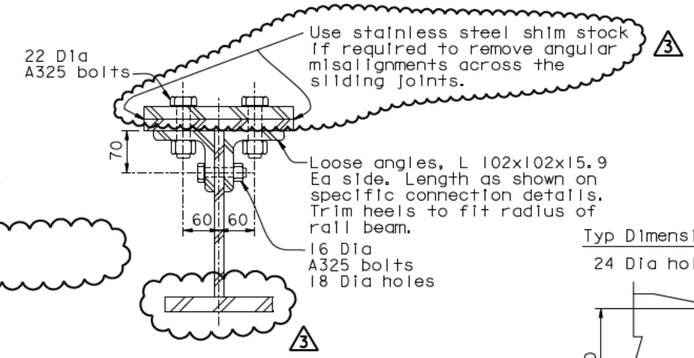

RAIL SECTION AT FIXED JOINTS
SECTION C-C
1:5

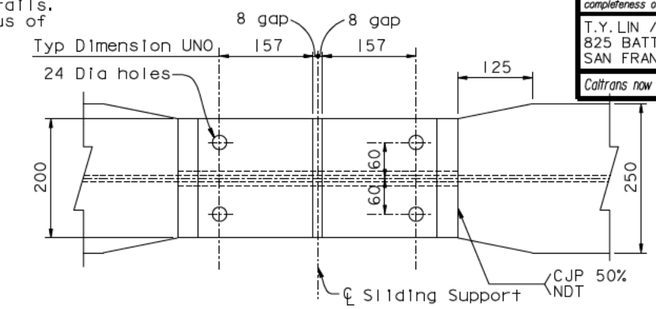

SECTION D-D
1:5

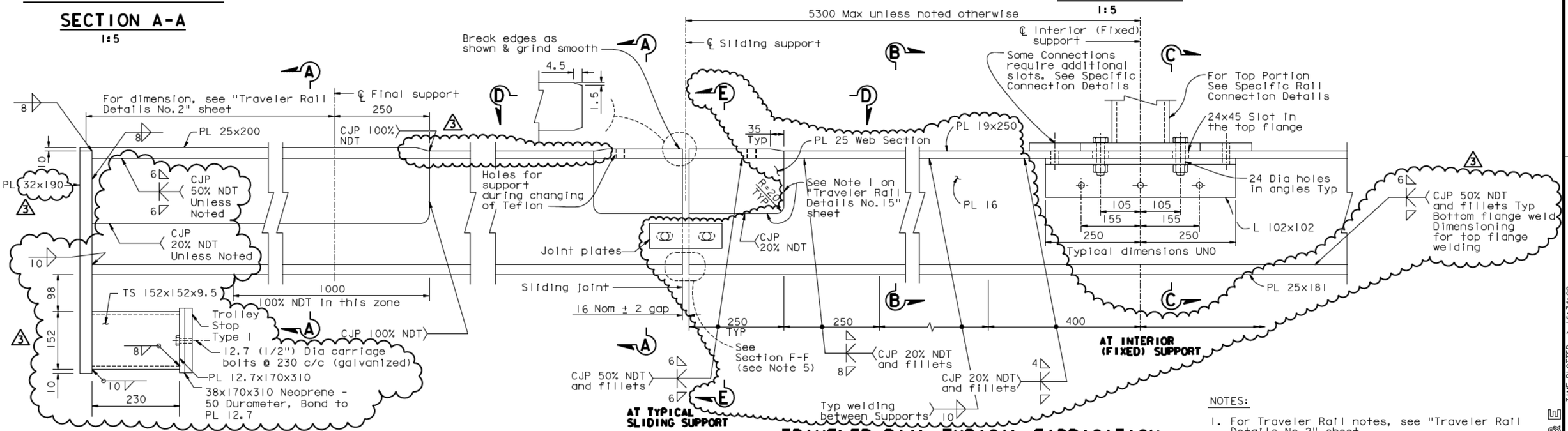

DETAIL AT RAIL ENDS

TRAVELER RAIL TYPICAL FABRICATION
1:5

NOTES:

1. For Traveler Rail notes, see "Traveler Rail Details No.2" sheet.
2. Rails, plates & Angles shown on this sheet to be hot dip galvanized.
3. For sliding joint detail, see "Traveler Rail Details No.2" sheet.
4. For trolley stop, see "Traveler Rail Details No.2" sheet.
5. For Sections E-E & F-F see "Traveler rail Details No.15" sheet.
6. For required tolerances on flange cuts see "Traveler Rail Details No.2" sheet.

REGISTERED PROFESSIONAL ENGINEER Marwan N. Nader No. C 054426 Exp. 12/31/09 CIVIL STATE OF CALIFORNIA

FOR REVISIONS ONLY

3 REVISION 3 SUPERSEDES REVISIONS 1 & 2

CONTRACT CHANGE ORDER NO. ____
SHEET ___ OF ___

REQUESTS FOR INFORMATION NOT ADDRESSED IN THIS CCO REMAIN IN FORCE

MARK	DATE	DESCRIPTIONS	BY	CH'D	CCO#
3	05/18/09	TRAVELER RAIL MODIFICATIONS	MN	GB	2450
2	07/20/07	RAIL CHANGE & MISCELLANEOUS DETAILS	GB	NV	24
1	08/04/06	TRAVELER RAILS	GB	NV	24

REVISIONS

R. Valizadeh/V. Toan/Y.L./W.L./F.C.
DESIGN OVERSIGHT
Roya Valizadeh / Vong Toan / Y. Liu
SIGN OFF DATE 05/18/09

Rev. Date: 5-18-98

DESIGN BY J. Otter CHECKED G. Baker
DETAILS BY J. Otter CHECKED M. Roberts
QUANTITIES BY J. Otter CHECKED M. Roberts

PREPARED FOR THE STATE OF CALIFORNIA DEPARTMENT OF TRANSPORTATION

R. Manzanarez
PROJECT ENGINEER

ALL DIMENSIONS ARE IN MILLIMETERS UNLESS OTHERWISE SHOWN

BRIDGE NO. 34-0006L/R
KILOMETER POST 13.2/13.9

SAN FRANCISCO OAKLAND BAY BRIDGE
EAST SPAN SEISMIC SAFETY PROJECT
SELF-ANCHORED SUSPENSION BRIDGE (SUPERSTRUCTURE & TOWER)

TRAVELER RAIL DETAILS NO. 1

ORIGINAL SCALE IN MILLIMETERS FOR REDUCED PLANS 0 10 20 30 40 50 60 70 80 90 100

CU 04
EA 0120F1

DISREGARD PRINTS BEARING EARLIER REVISION DATES

REVISION DATES (PRELIMINARY STAGE ONLY) 04/18/02 07/24/02 12/19/02

SHEET 703R3 OF

FILE -> I:\bb\04-012001\sas\contract plans and cco\cco\cco#24s0\2-revision 05-18-09\dgn\aktrv112.dgn

USERNAME -> dwinrow DATE PLOTTED => 19 MAY 2009 TIME PLOTTED => 16:34:22

100% PS&E

DIST.	COUNTY	ROUTE	KILOMETER POST TOTAL PROJECT	SHEET NO.	TOTAL SHEETS
04	SF	80	13.2/13.9	112R3	1204

Caltrans Metric

George Baker
REGISTERED ENGINEER - CIVIL
12-6-04
PLANS APPROVAL DATE

REGISTERED PROFESSIONAL ENGINEER George S. Baker No. C 57112 Exp. 12/31/05 CIVIL STATE OF CALIFORNIA

The State of California or its officers or agents shall not be responsible for the accuracy or completeness of electronic copies of this plan sheet.

T.Y. LIN / MOFFATT & NICHOL
825 BATTERY STREET
SAN FRANCISCO, CA 94111

Caltrans now has a web site! To get to the web site, go to: http://www.dot.ca.gov

MAIN TRAVELERS - RAIL JOINT LOCATIONS GIVEN BY PANEL POINT (PP) NUMBERS

Rail Section No.	Sliding Connection	Fixed Connection	Sliding Connection
** 1 △3	Near PP 8.5	PP 9	PP 10
2	PP 10	PP 11	PP 12
3	PP 12	PP 13	PP 14
4	PP 14	PP 15	PP 16
5	PP 16	PP 17	PP 18
6	PP 18	PP 19	PP 20
7	PP 20	PP 21	PP 22
8	PP 22	PP 23	PP 24
9	PP 24	PP 25	PP 26
10	PP 26	PP 27	PP 28
11	PP 28	PP 29	PP 30
12	PP 30	PP 31	PP 32
13	PP 32	PP 33	PP 34

Rail Section No.	Sliding Connection	Fixed Connection	Sliding Connection
14	PP 34	PP 35	PP 36
15	PP 36	PP 37	PP 38
16	PP 38	PP 39	PP 40
17	PP 40	PP 41	PP 42
18	PP 42	PP 43	PP 44
19	PP 44	PP 45	PP 46
20	PP 46	PP 47	PP 48
21	PP 48	PP 49	PP 50
22	PP 50	PP 51	PP 52
23	PP 52	PP 53	PP 54
24	PP 54	PP 55	PP 56
25	PP 56	PP 57	PP 58
26	PP 58	PP 59	PP 60

Rail Section No.	Sliding Connection	Fixed Connection	Sliding Connection
27	PP 60	PP 61	PP 62
28	PP 62	PP 63	PP 64
29	PP 64	PP 65	PP 66
30	PP 66	PP 67	PP 68
31	PP 68	PP 69	PP 70
32	PP 70	PP 71	PP 72
33	PP 72	PP 73	PP 74
34	PP 74	PP 75	PP 76
35	PP 76	PP 77	PP 78
36	PP 78	PP 79	PP 80
37	PP 80	PP 81	PP 82
38	PP 82	PP 83	PP 84
39	PP 84	PP 85	PP 86

Rail Section No.	Sliding Connection	Fixed Connection	Sliding Connection
40	PP 86	PP 87	PP 88
41	PP 88	PP 89	PP 90
42	PP 90	PP 91	PP 92
43	PP 92	PP 93	PP 94
44	PP 94	PP 95	PP 96
45	PP 96	PP 97	PP 98
46	PP 98	PP 99	PP 100
47	PP 100	PP 101	PP 102

Rail Section No.	Sliding Connection	Fixed Connection	Sliding Connection
48	PP 102	PP 103	PP 104
49	PP 104	PP 105	PP 106
50	PP 106	PP 107 △3	PP 108 △3
51	PP 108 △3	PP 109 (K)	PP 110 (K)
52	PP 110 (K)	PP 111 (K)	PP 112
53	PP 112	PP 113	PP 114
54	PP 114	PP 115	PP 116
** 55	PP 116	PP 117	PP 118 & PP 118.35
** 56	PP 119.65 & PP 120	PP 121	PP 122
57	PP 122	none	PP 123
58	PP 123	PP 124	PP 125
59	PP 125	PP 126	PP 127
** 60	PP 127	PP 128	see schematic

**Denotes Special Rail End Details

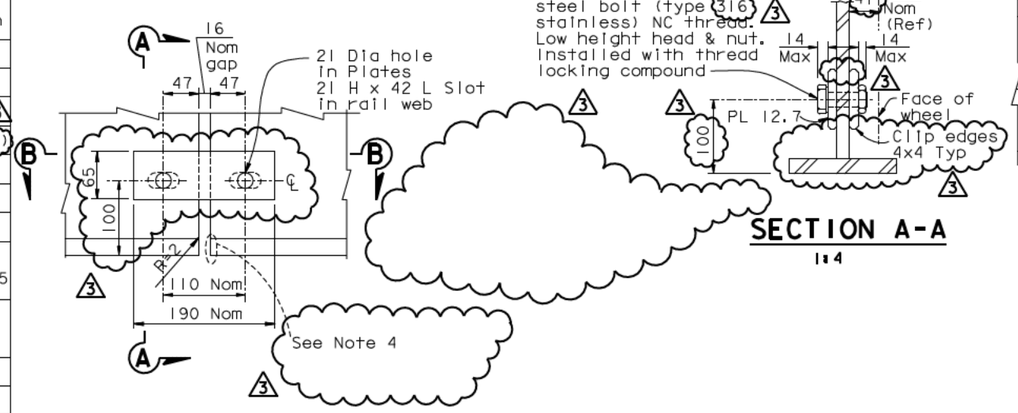

SLIDING JOINT DETAIL
1:4

SECTION A-A
1:4

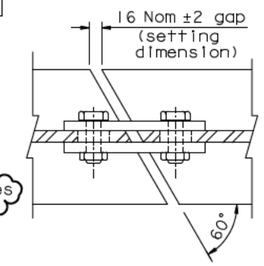

SECTION B-B
1:4

TRAVELER RAIL NOTES - SAS & E2/E3 TRAVELER RAILS △3

1. Rail material (flange plates & web plates) to be ASTM A572 or A709 grade 50 (Fy= 345 MPa).
2. Rail, boss plates & angles to be hot dip galvanized per specification.
3. The Nominal 16 mm gap between rail sections is to allow for slippage movement between rail and box in major seismic event.
4. Rail gaps to be set only after all dead load is in place on the structure. Tolerances across gaps to be per "Traveler Rail Details No. 15" sheet. △3
5. Rail to be fabricated in one to three span units as called out on this sheet.
6. Rail to be supported at panel points of the box structure at 5300 maximum c/c supports, unless noted otherwise.
7. Traveler rail and mounting on the Skyway structure is by Others except as noted below:
   - The inner (SAS) rail set (which crosses the Hinge A joint) is to be supplied and installed under this contract. It will be mounted to brackets on the Skyway structure which will be supplied and installed by Others. △3
   - The outer (transition span) rail set bolts are to be tightened under this contract after the connection of the transition span to the SAS and all dead load is in place on the structure.
8. Fabricator is to select a connection from types as appropriate to the geometry and to detail the connection within the permissible ranges of variation shown on the details.
9. For details of the various connection types, see "Traveler Rail Details" sheets.
10. Location of traveler rails is described on the "Traveler Operating Ranges" sheets.
11. All bolts to be ASTM A325 unless otherwise noted on the plans. △3
12. For special support details, see "Traveler Rail Details No. 14" sheet.

K denotes kinked rail at these panel points. See "Traveler Rail Details No. 15" sheet. △3

△3 Note: Thickened upper web continuous over 2 supports

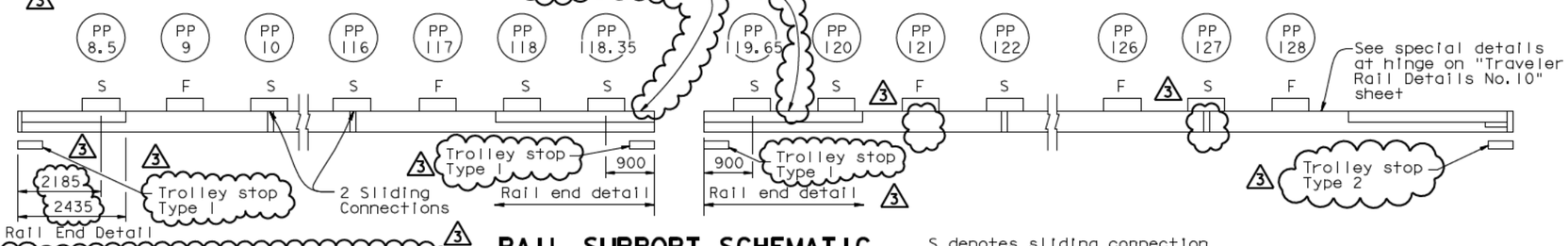

Rail End Detail

See also Traveler Operating Ranges Drawings for vertical deviations of rails. △3

RAIL SUPPORT SCHEMATIC
NTS

S denotes sliding connection
F denotes fixed connection

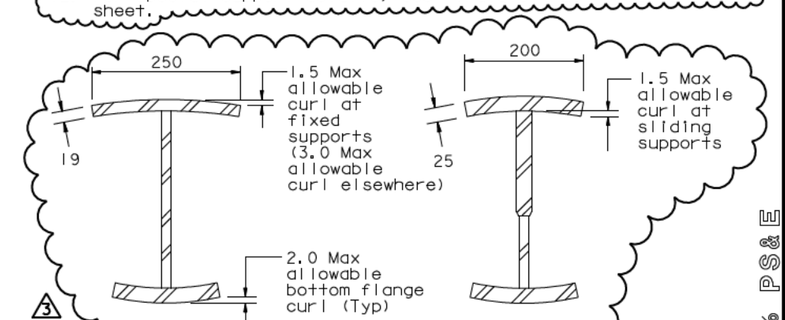

MAXIMUM ALLOWABLE FLANGE DEFORMATIONS
NTS

REGISTERED PROFESSIONAL ENGINEER Marwan M. Nader No. C 054426 Exp. 12/31/09 CIVIL STATE OF CALIFORNIA

FOR REVISIONS ONLY

△3 REVISION △3 SUPERSEDES REVISIONS △1 & △2

CONTRACT CHANGE ORDER NO. ____
SHEET ___ OF ___

REQUESTS FOR INFORMATION NOT ADDRESSED IN THIS CCO REMAIN IN FORCE

MARK	DATE	DESCRIPTIONS	BY	CH'D	CCO#
△3	06/05/09	TRAVELER RAIL MODIFICATIONS	MN	GB	2450
△2	07/20/07	RAIL CHANGE & MISCELLANEOUS DETAILS	GB	NV	24
△1	08/04/06	TRAVELER RAILS	GB	NV	24

REVISIONS

R. Vallzadeh/V. Toan/Y.L./W.L./F.C.
DESIGN OVERSIGHT
Roya Valizadeh / Vong Toan / Y. Liu
SIGN OFF DATE 06/09/09

Rev. Date: 5-18-98

	BY	CHECKED
DESIGN	J. Otter	G. Baker
DETAILS	J. Otter	M. Roberts
QUANTITIES	J. Otter	M. Roberts

PREPARED FOR THE STATE OF CALIFORNIA DEPARTMENT OF TRANSPORTATION

R. Manzanarez
PROJECT ENGINEER

ALL DIMENSIONS ARE IN MILLIMETERS UNLESS OTHERWISE SHOWN

ORIGINAL SCALE IN MILLIMETERS FOR REDUCED PLANS 0 10 20 30 40 50 60 70 80 90 100

CU 04
EA 0120F1

BRIDGE NO. 34-0006L/R
KILOMETER POST 13.2/13.9

SAN FRANCISCO OAKLAND BAY BRIDGE
EAST SPAN SEISMIC SAFETY PROJECT
SELF-ANCHORED SUSPENSION BRIDGE
(SUPERSTRUCTURE & TOWER)

TRAVELER RAIL DETAILS NO. 2

DISREGARD PRINTS BEARING EARLIER REVISION DATES 04/19/02 07/20/02 12/19/02

REVISION DATES (PRELIMINARY STAGE ONLY)

SHEET 704R3 OF

FILE -> I:\bb\04-012001\sas\contract plans and cco\cco\cco#2450\3-update 06-05-09\dgn\aktrvl13.dgn

100 % PS&E

USERNAME => dwinrow DATE PLOTTED => 10 JUN 2009 TIME PLOTTED => 15:53:49

DIST.	COUNTY	ROUTE	KILOMETER POST TOTAL PROJECT	SHEET NO.	TOTAL SHEETS
04	SF	80	13.2/13.9	1122R4	1204

Caltrans Metric

George Baker
REGISTERED ENGINEER - CIVIL
12-6-04
PLANS APPROVAL DATE

REGISTERED PROFESSIONAL ENGINEER George S. Baker No. C 57112 Exp. 12/31/05 CIVIL STATE OF CALIFORNIA

The State of California or its officers or agents shall not be responsible for the accuracy or completeness of electronic copies of this plan sheet.

T.Y. LIN / MOFFATT & NICHOL
825 BATTERY STREET
SAN FRANCISCO, CA 94111

Caltrans now has a web site! To get to the web site, go to: http://www.dot.ca.gov

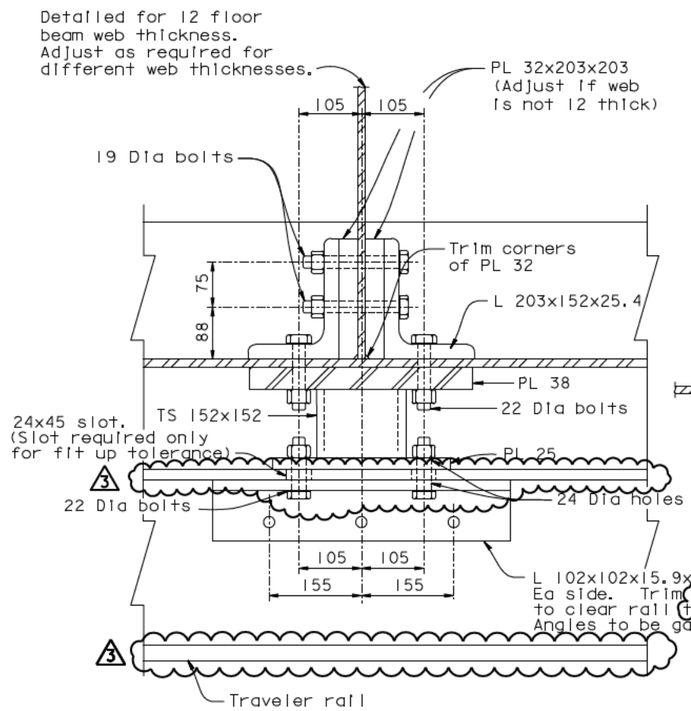

SECTION A-A
1:5

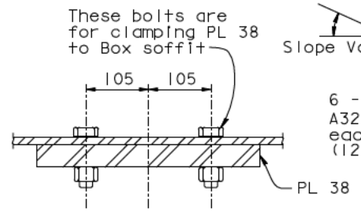

SECTION C-C
1:5

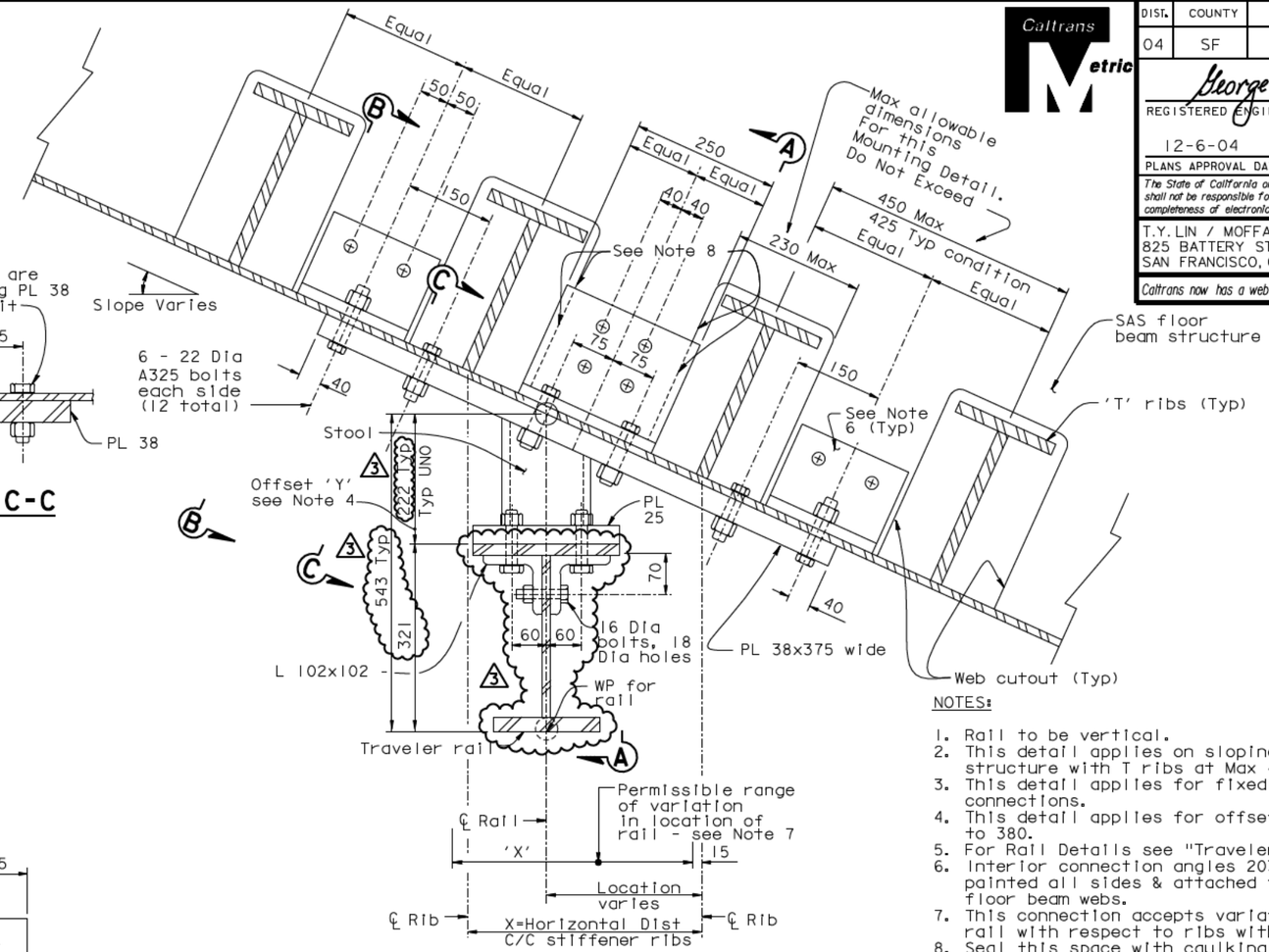

SAS RAIL MOUNTING INCLINED SOFFIT
1:5 (See Note 11)

NOTES:

1. Rail to be vertical.
2. This detail applies on sloping soffit faces of SAS structure with T ribs at Max 450 c/c.
3. This detail applies for fixed (interior) rail connections.
4. This detail applies for offset distance 'Y' from 216 to 380.
5. For Rail Details see "Traveler Rail Details No 1" sheet.
6. Interior connection angles 203x152 & 152x152 are to be painted all sides & attached to painted surfaces of SAS floor beam webs.
7. This connection accepts variation in the location of rail with respect to ribs within the limits shown.
8. Seal this space with caulking and retouch paint after installation of angles.
9. For connections on skew, replace TS 152x152 with skewed fabricated section as shown below.

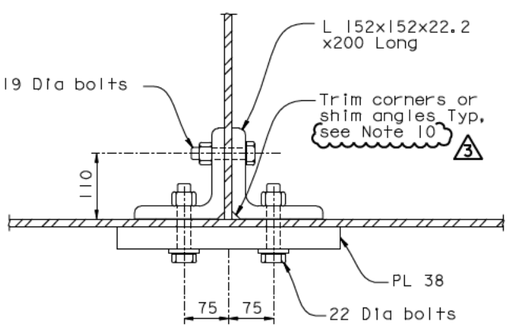

SECTION B-B
1:5

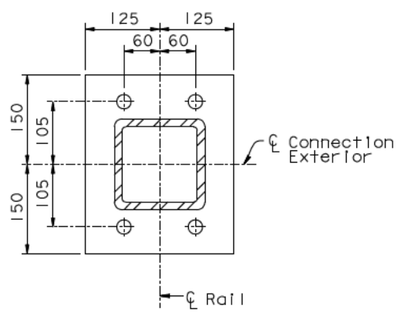

SECTION D-D
1:5

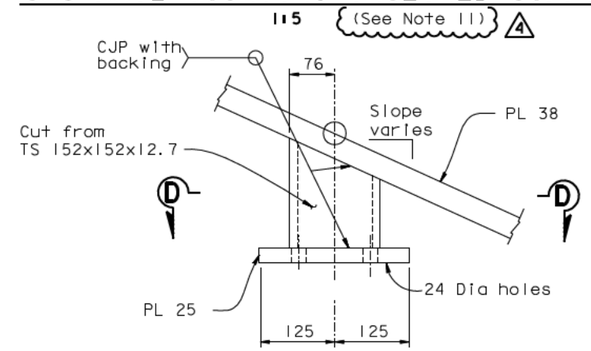

STOOL DETAIL
1:5

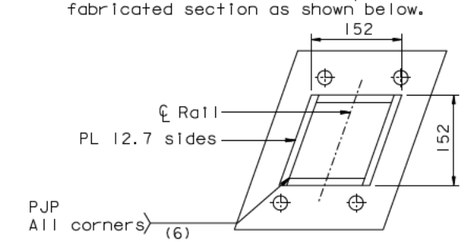

10. Trim corners by removing no more than 1/4 of the angle size from the corner, or provide shim plates to clear the weld.

11. For details at PP113 & PP115, see "Traveler Rail Details No. 3B" sheet. For details at PP112, PP114 & PP116, see "Traveler Rail Details No. 3C" sheet.

REVISION 3 SUPERSEDES REVISIONS 1 & 2

CONTRACT CHANGE ORDER NO. ____
SHEET ___ OF ___

REGISTERED PROFESSIONAL ENGINEER Marwan N. Nader No. C 054426 Exp. 12/31/11 CIVIL STATE OF CALIFORNIA

FOR REVISIONS ONLY

REQUESTS FOR INFORMATION NOT ADDRESSED IN THIS CCO REMAIN IN FORCE

MARK	DATE	DESCRIPTIONS	BY	CH'D	CCO#
4	03/19/10	TRAVELER RAIL MODIFICATIONS	MN	GB	2450
3	05/18/09	TRAVELER RAIL MODIFICATIONS	MN	GB	2450
2	07/20/07	RAIL CHANGE & MISCELLANEOUS DETAILS	GB	NV	24
1	08/04/06	TRAVELER RAILS	GB	NV	24

REVISIONS

CONNECTION F1-01

ALL DIMENSIONS ARE IN MILLIMETERS UNLESS OTHERWISE SHOWN

R. Vallizadeh/V. Toan/Y.L./W.L./F.C.
DESIGN OVERSIGHT
Ryan Vallizadeh / Vong D. Toan / Y. Liu
SIGN OFF DATE 03/19/10

Rev. Date: 5-18-98

	BY	CHECKED
DESIGN	J. Otter	G. Baker
DETAILS	J. Otter	M. Roberts
QUANTITIES	J. Otter	M. Roberts

PREPARED FOR THE STATE OF CALIFORNIA DEPARTMENT OF TRANSPORTATION

R. Manzanarez
PROJECT ENGINEER

BRIDGE NO. 34-0006L/R
KILOMETER POST 13.2/13.9

SAN FRANCISCO OAKLAND BAY BRIDGE
EAST SPAN SEISMIC SAFETY PROJECT
SELF-ANCHORED SUSPENSION BRIDGE
(SUPERSTRUCTURE & TOWER)

TRAVELER RAIL DETAILS NO. 3

ORIGINAL SCALE IN MILLIMETERS FOR REDUCED PLANS 0 10 20 30 40 50 60 70 80 90 100

CU 04
EA 0120F1

DISREGARD PRINTS BEARING EARLIER REVISION DATES

REVISION DATES (PRELIMINARY STAGE ONLY) 04/19/02 07/01/02 12/19/02

SHEET 705R4 OF

FILE -> I:\bb\04-012001\sas\contract plans and cco\cco\cco#24s0\8-revision 03-19-10\dgn\aktrv114.dgn

USERNAME => dwinrow DATE PLOTTED => 18 MAR 2010 TIME PLOTTED => 09:35:46

100 % PS&E

DIST.	COUNTY	ROUTE	KILOMETER POST TOTAL PROJECT	SHEET NO.	TOTAL SHEETS
04	SF	80	13.2/13.9	1122SIR1	1204

REGISTERED ENGINEER - CIVIL

07-20-07

PLANS APPROVAL DATE

The State of California or its officers or agents shall not be responsible for the accuracy or completeness of electronic copies of this plan sheet.

REGISTERED PROFESSIONAL ENGINEER Marwan N. Nader No. C 054426 Exp. 12/31/09 CIVIL STATE OF CALIFORNIA

T.Y. LIN / MOFFATT & NICHOL
825 BATTERY STREET
SAN FRANCISCO, CA 94111

Caltrans now has a web site! To get to the web site, go to: http://www.dot.ca.gov

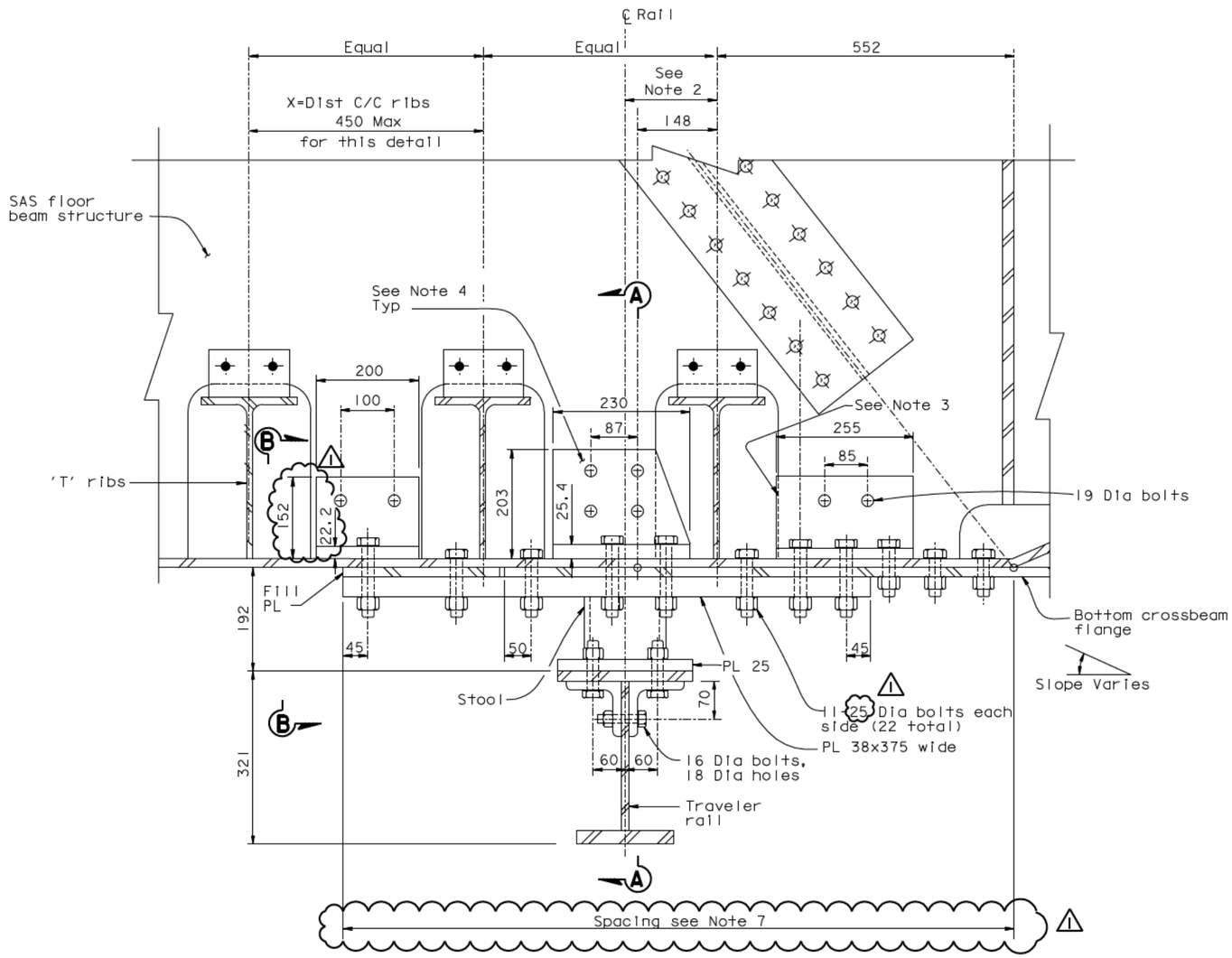

SAS RAIL MOUNTING @ CROSSBEAM CONNECTION

1:5

(Fixed rail mounting shown)
(Sliding rail mounting similar)

NOTES:

1. Rail to be vertical.
2. For Traveler Rail Location, refer to Traveler Operating Ranges Sheets. Dimension shall not exceed rib spacing.
3. Seal this space with caulking and retouch paint after installation of angles.
4. Interior connection angles are to be painted all sides and attached to painted surfaces of SAS floor beam webs.
5. For Sections A-A & B-B, see "Traveler Rail Details No. 4" sheet, similar.
6. For details not shown, see "Traveler Rail Details No. 4" sheet, similar.
7. For traveler rail support plate bolting dimensions, see "Typical Crossbeam Details No. 9"

REVISION 1 SUPERSEDES REVISION 0

CONTRACT CHANGE ORDER NO. ____
SHEET ___ OF ___

REQUESTS FOR INFORMATION NOT ADDRESSED IN THIS CCO REMAIN IN FORCE

ALL DIMENSIONS ARE IN MILLIMETERS UNLESS OTHERWISE SHOWN

R. Vallizadeh/V. Toan/Y.L./W.L./F.C.
DESIGN OVERSIGHT
SIGN OFF DATE 06/23/09

MARK	DATE	DESCRIPTIONS	BY	CH'D	CCO#
1	06/23/09	TRAVELER RAIL MODIFICATIONS	MN	NV	24S0
0	07/20/07	RAIL CHANGE AND MISCELLANEOUS DETAILS	MN	NV	24

REVISIONS

	BY	CHECKED
DESIGN	J. Otter	M. Nader
DETAILS	J. Otter	M. Roberts
QUANTITIES	J. Otter	M. Roberts

PREPARED FOR THE STATE OF CALIFORNIA DEPARTMENT OF TRANSPORTATION

R. Manzanarez
PROJECT ENGINEER

BRIDGE NO. 34-0006L/R
KILOMETER POST 13.2/13.9

SAN FRANCISCO OAKLAND BAY BRIDGE
EAST SPAN SEISMIC SAFETY PROJECT
SELF-ANCHORED SUSPENSION BRIDGE
(SUPERSTRUCTURE & TOWER)

TRAVELER RAIL DETAILS NO. 3A

Rev. Date: 5-18-98

ORIGINAL SCALE IN MILLIMETERS FOR REDUCED PLANS 0 10 20 30 40 50 60 70 80 90 100

CU 04
EA 0120F1

DISREGARD PRINTS BEARING EARLIER REVISION DATES

REVISION DATES (PRELIMINARY STAGE ONLY) 07/20/07

SHEET 705SIR1 OF

FILE -> I:\bb\04-012001\sas\contract plans and cco\cco\cco#24s0\5-update 06-23-09\dgn\aktrv115a.dgn

100 % PS&E

USERNAME => dwinrow DATE PLOTTED => 23 JUN 2009 TIME PLOTTED => 13:33:53

DIST.	COUNTY	ROUTE	KILOMETER POST TOTAL PROJECT	SHEET NO.	TOTAL SHEETS
04	SF	80	13.2/13.9	112252	1204

Caltrans Metric

REGISTERED ENGINEER - CIVIL

03-05-10

PLANS APPROVAL DATE

REGISTERED PROFESSIONAL ENGINEER Bashkim Prishtina No. C 053561 Exp. 6/30/11 CIVIL STATE OF CALIFORNIA

The State of California or its officers or agents shall not be responsible for the accuracy or completeness of electronic copies of this plan sheet.

T.Y. LIN / MOFFATT & NICHOL
825 BATTERY STREET
SAN FRANCISCO, CA 94111

Caltrans now has a web site! To get to the web site, go to: http://www.dot.ca.gov

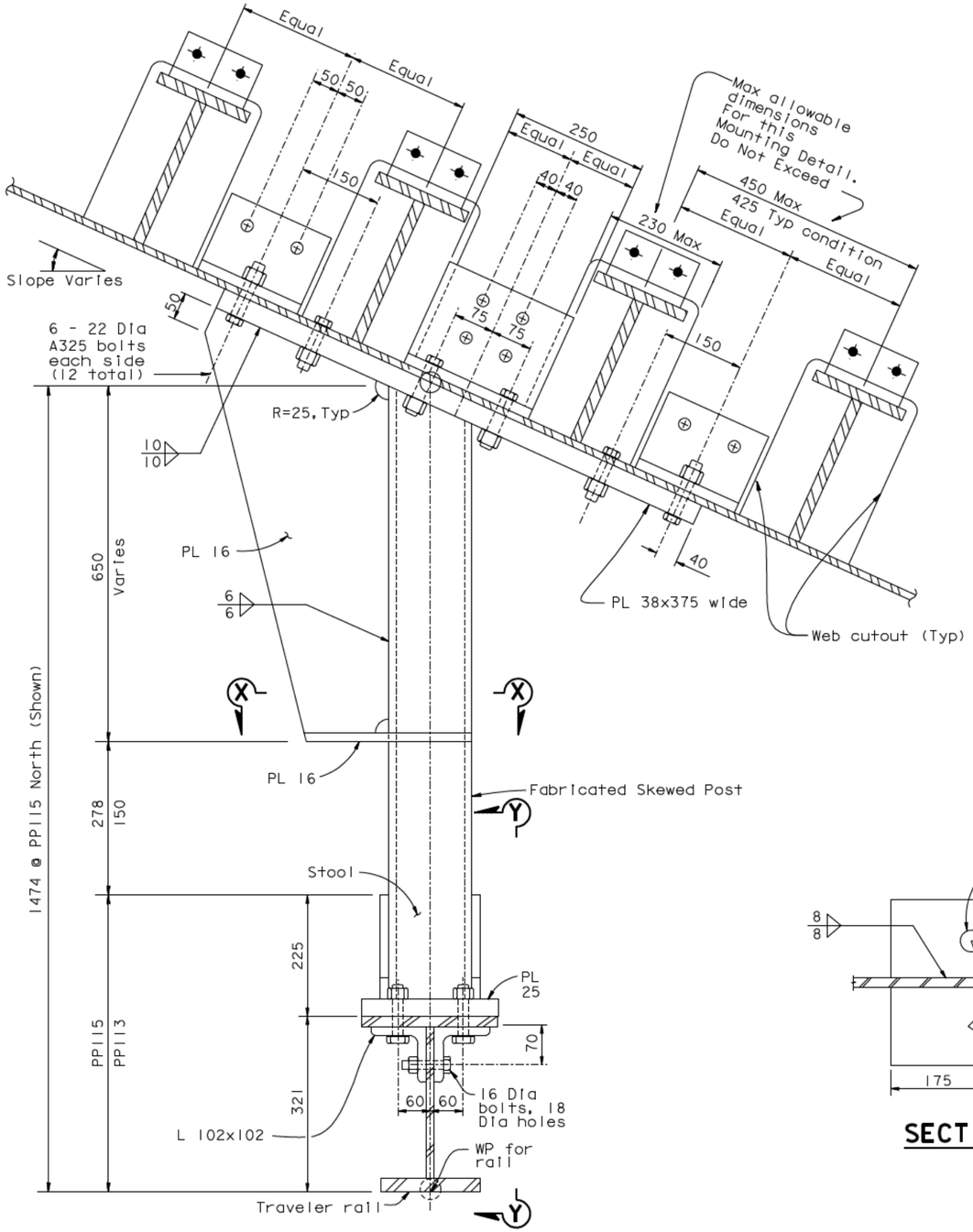

SAS RAIL MOUNTING INCLINED SUPPORT NORTH RAIL AT PP113 & PP115

1:5

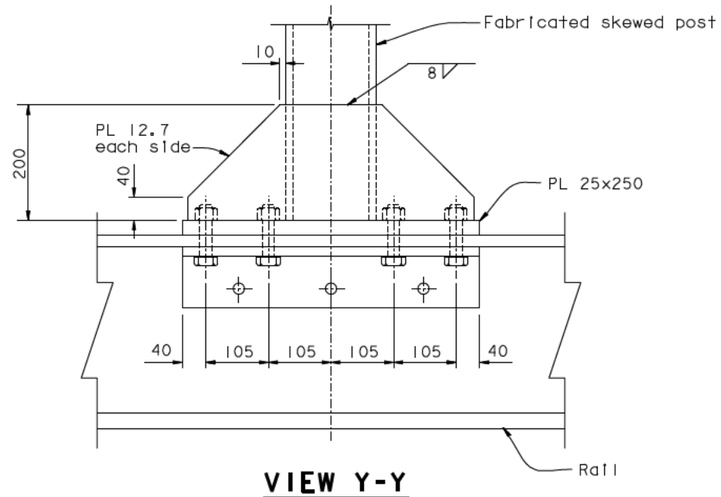

VIEW Y-Y

1:5

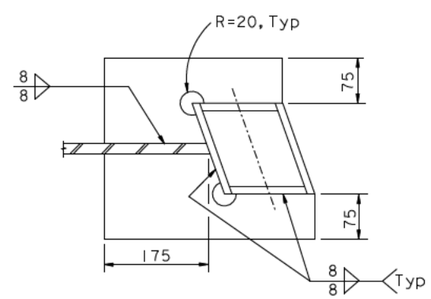

SECTION X-X

1:5

NOTES:

1. For details not shown, see "Traveler Rail Details No.3" sheet for fixed supports, and "Traveler Rail Details No.6" sheet at sliding supports.

CONTRACT CHANGE ORDER NO. ____
SHEET ___ OF ___

REQUESTS FOR INFORMATION NOT ADDRESSED IN THIS CCO REMAIN IN FORCE

ALL DIMENSIONS ARE IN MILLIMETERS UNLESS OTHERWISE SHOWN

R. Vallizadeh/V. Toan/Y.L./W.L./F.C.
DESIGN OVERSIGHT
Ryan Vallizadeh / Vong Toan / Y. Liu
SIGN OFF DATE 03/05/10

MARK	DATE	DESCRIPTIONS	BY	CH'D	CCO#
0	03/05/10	TRAVELER RAIL MODIFICATIONS	BP	AS	24S0

REVISIONS

DESIGN	BY J. Otter	CHECKED	A. Sanjines
DETAILS	BY J. Otter	CHECKED	A. Sanjines
QUANTITIES	BY J. Otter	CHECKED	A. Sanjines

PREPARED FOR THE STATE OF CALIFORNIA DEPARTMENT OF TRANSPORTATION

R. Manzanarez
PROJECT ENGINEER

BRIDGE NO. 34-0006L/R
KILOMETER POST 13.2/13.9

SAN FRANCISCO OAKLAND BAY BRIDGE
EAST SPAN SEISMIC SAFETY PROJECT
SELF-ANCHORED SUSPENSION BRIDGE
(SUPERSTRUCTURE & TOWER)

TRAVELER RAIL DETAILS NO. 3B

Rev. Date: 5-18-98

ORIGINAL SCALE IN MILLIMETERS FOR REDUCED PLANS 0 10 20 30 40 50 60 70 80 90 100

CU 04
EA 0120F1

DISREGARD PRINTS BEARING EARLIER REVISION DATES 03/05/10

REVISION DATES (PRELIMINARY STAGE ONLY)

SHEET 705S2 OF

FILE -> I:\bb\04-012001\sas\contract plans and cco\cco\cco#24s0\7-revision 03-05-10\dgn\aktrv114b.dgn

100 % PS&E

USERNAME => arivera DATE PLOTTED => 05 MAR 2010 TIME PLOTTED => 07:42:41

DIST.	COUNTY	ROUTE	KILOMETER POST TOTAL PROJECT	SHEET NO.	TOTAL SHEETS
04	SF	80	13.2/13.9	112253	1204

Caltrans Metric

REGISTERED ENGINEER - CIVIL

03-05-10

PLANS APPROVAL DATE

The State of California or its officers or agents shall not be responsible for the accuracy or completeness of electronic copies of this plan sheet.

REGISTERED PROFESSIONAL ENGINEER Bashkim Prishtina No. C 053561 Exp. 6/30/11 CIVIL STATE OF CALIFORNIA

T.Y. LIN / MOFFATT & NICHOL
825 BATTERY STREET
SAN FRANCISCO, CA 94111

Caltrans now has a web site! To get to the web site, go to: http://www.dot.ca.gov

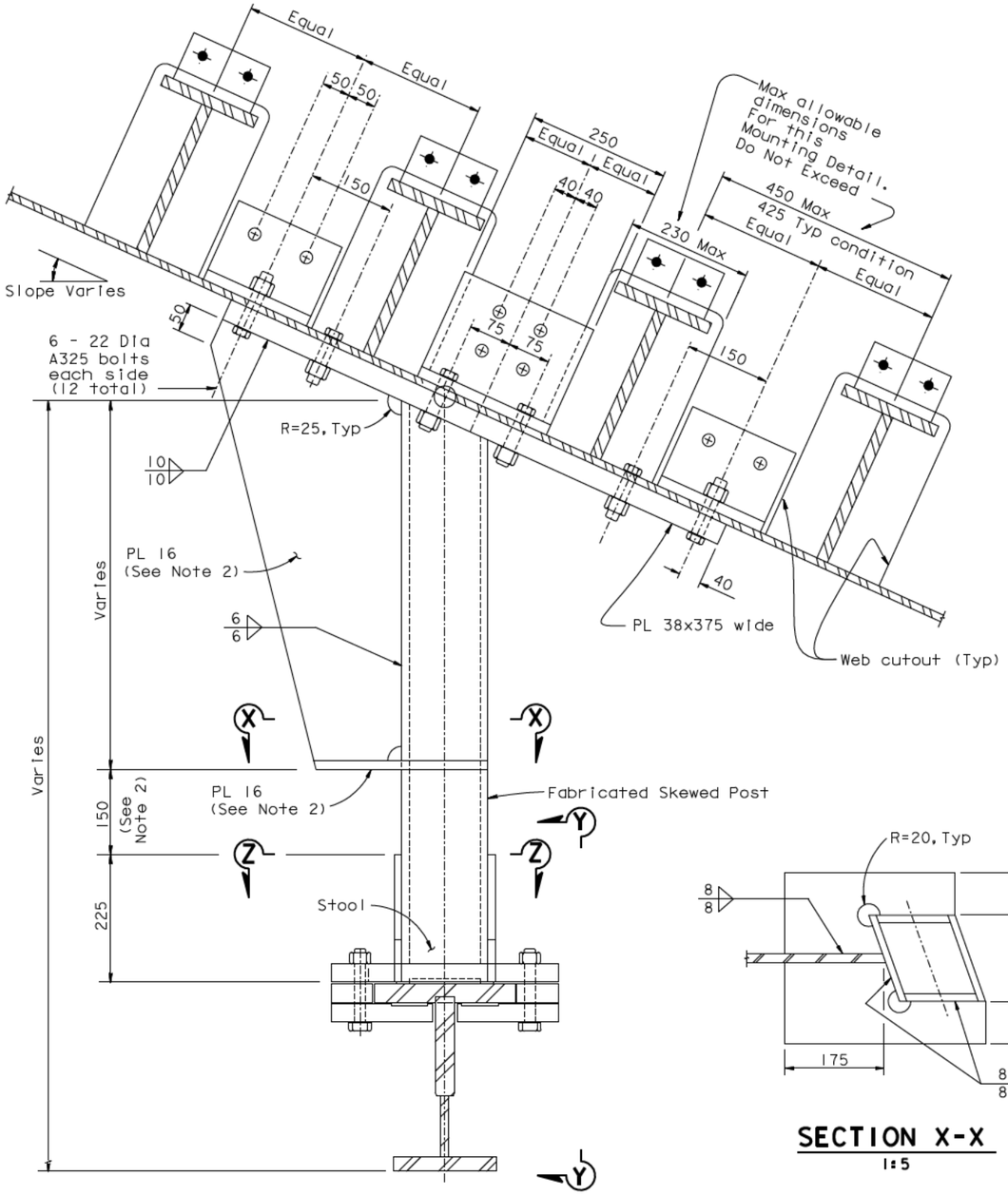

SAS RAIL MOUNTING INCLINED SUPPORT NORTH RAIL AT PP112, PP114 AND PP116

1:5

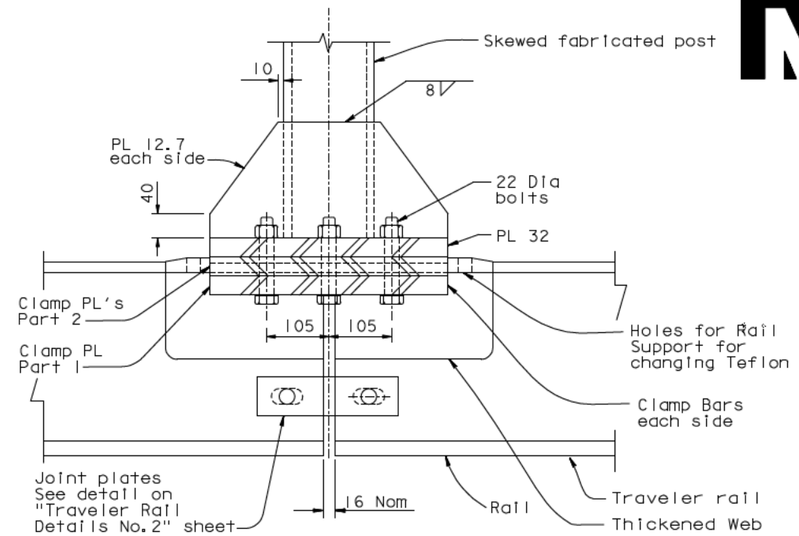

VIEW Y-Y

1:5

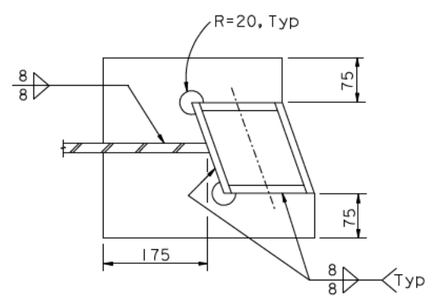

SECTION X-X

1:5

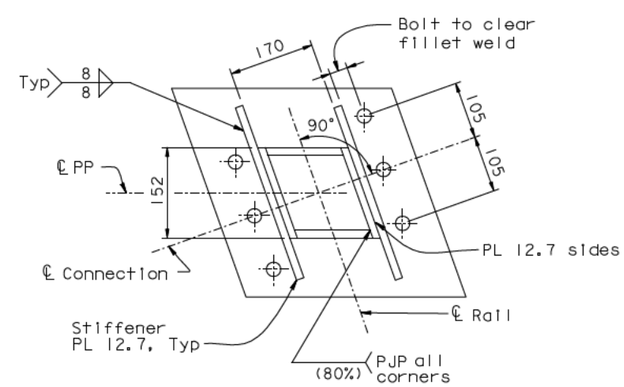

SECTION Z-Z

1:5

NOTES:

1. For details not shown, see "Traveler Rail Details No. 3" sheet for fixed supports, and "Traveler Rail Details No. 6" sheet at sliding supports.
2. Does not apply at PP112.

CONTRACT CHANGE ORDER NO. ____
SHEET ___ OF ___

REQUESTS FOR INFORMATION NOT ADDRESSED IN THIS CCO REMAIN IN FORCE

ALL DIMENSIONS ARE IN MILLIMETERS UNLESS OTHERWISE SHOWN

MARK	DATE	DESCRIPTIONS	BY	CH'D	CCO#
0	03/05/10	TRAVELER RAIL MODIFICATIONS	BP	AS	24S0

REVISIONS

R. Vallizadeh/V. Toan/Y.L./W.L./F.C.
DESIGN OVERSIGHT
SIGN OFF DATE 03/09/10

	BY	CHECKED
DESIGN	J. Otter	A. Sanjines
DETAILS	J. Otter	A. Sanjines
QUANTITIES	J. Otter	A. Sanjines

PREPARED FOR THE STATE OF CALIFORNIA DEPARTMENT OF TRANSPORTATION

R. Manzanarez
PROJECT ENGINEER

BRIDGE NO. 34-0006L/R
KILOMETER POST 13.2/13.9

SAN FRANCISCO OAKLAND BAY BRIDGE
EAST SPAN SEISMIC SAFETY PROJECT
SELF-ANCHORED SUSPENSION BRIDGE
(SUPERSTRUCTURE & TOWER)

TRAVELER RAIL DETAILS NO. 3C

Rev. Date: 5-18-98

ORIGINAL SCALE IN MILLIMETERS FOR REDUCED PLANS 0 10 20 30 40 50 60 70 80 90 100

CU 04
EA 0120F1

DISREGARD PRINTS BEARING EARLIER REVISION DATES 03/05/10

REVISION DATES (PRELIMINARY STAGE ONLY)

SHEET 705S3 OF

FILE -> I:\bb\04-012001\sas\contract plans and cco\cco\cco#24s0\7-revision 03-05-10\dgn\aktrv114c.dgn

100 % PS&E

USERNAME => arivera DATE PLOTTED => 05 MAR 2010 TIME PLOTTED => 07:44:00

DIST.	COUNTY	ROUTE	KILOMETER POST TOTAL PROJECT	SHEET NO.	TOTAL SHEETS
04	SF	80	13.2/13.9	1123R3	1204

Caltrans Metric

George Baker
REGISTERED ENGINEER - CIVIL
12-6-04
PLANS APPROVAL DATE

REGISTERED PROFESSIONAL ENGINEER George S. Baker No. C 57112 Exp. 12/31/05 CIVIL STATE OF CALIFORNIA

The State of California or its officers or agents shall not be responsible for the accuracy or completeness of electronic copies of this plan sheet.

T.Y. LIN / MOFFATT & NICHOL
825 BATTERY STREET
SAN FRANCISCO, CA 94111

Caltrans now has a web site! To get to the web site, go to: http://www.dot.ca.gov

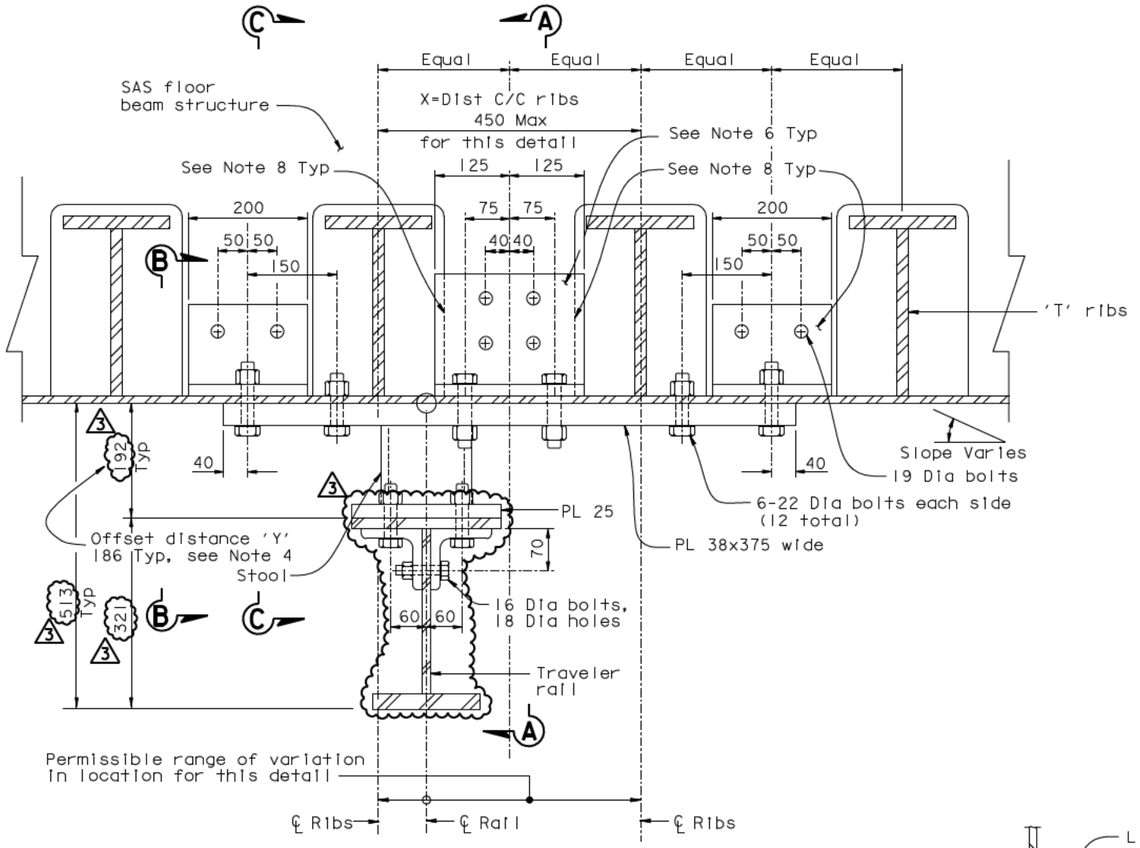

SAS RAIL MOUNTING HORIZONTAL SOFFIT

1:5

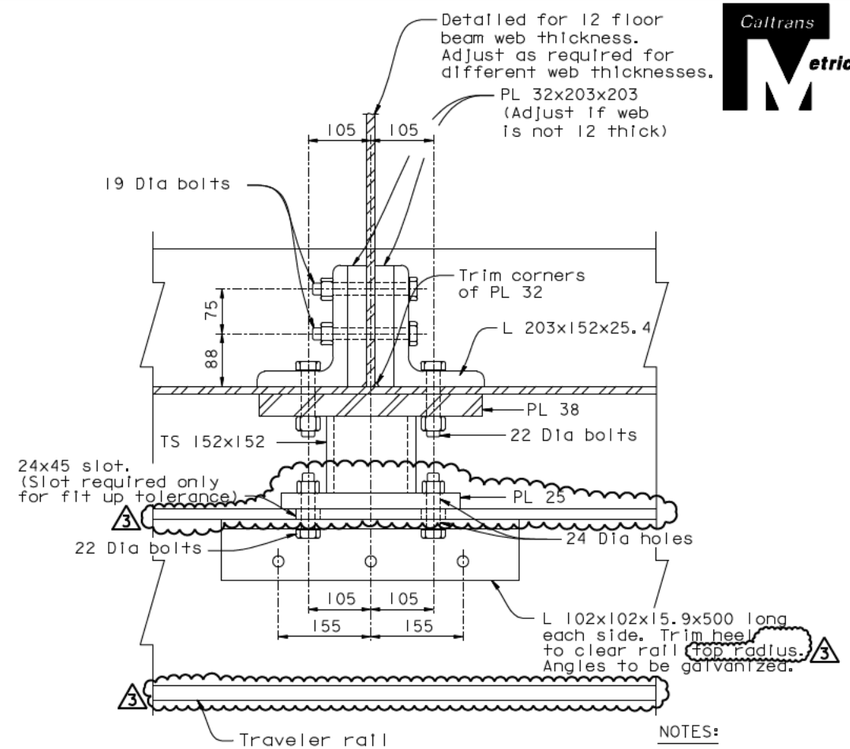

SECTION A-A

1:5

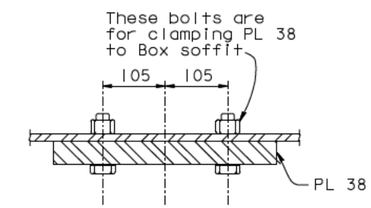

SECTION C-C

1:5

NOTES:

1. Rail to be vertical.
2. This detail applies on near horizontal soffit of SAS structure with T ribs at Max 450 c/c.
3. This detail applies for fixed (interior) rail connections.
4. This detail applies for offset distance 'Y' from 186 to 380.
5. For Rail Details see "Traveler Rail Details No. 1" sheet.
6. Interior connection angles 203x152 & 152x152 are to be painted all sides & attached to painted surfaces of SAS floor beam webs.
7. This connection accepts variation in the location of rail with respect to ribs within the limits shown.
8. Seal this space with caulking and retouch point after installation of angles.
9. For connections on skew, replace TS 152x152 with skewed fabricated section.

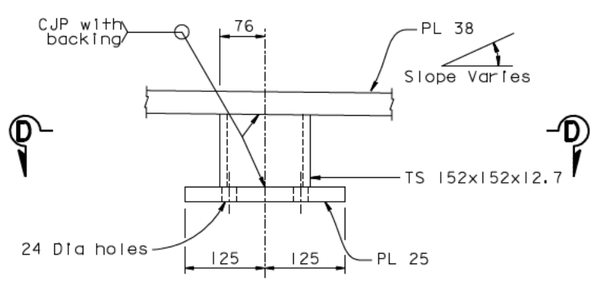

STOOL DETAIL

1:5

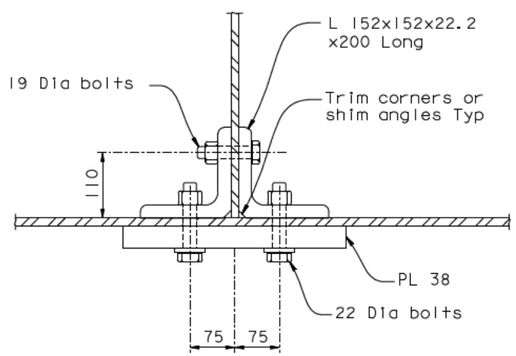

SECTION B-B

1:5

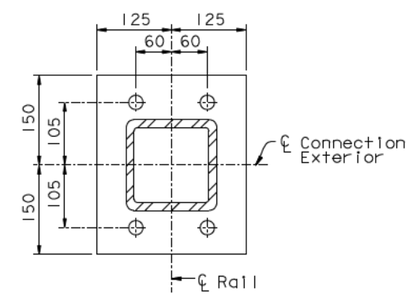

SECTION D-D

1:5

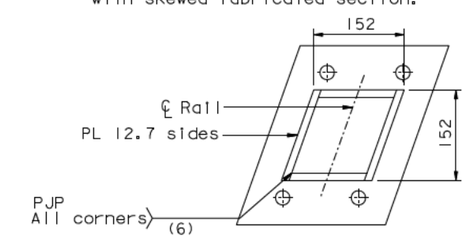

CONNECTION FH-01

REGISTERED PROFESSIONAL ENGINEER Marwan N. Nader No. C 054426 Exp. 12/31/09 CIVIL STATE OF CALIFORNIA

FOR REVISIONS ONLY

3 REVISION 3 SUPERSEDES REVISIONS 1 & 2

CONTRACT CHANGE ORDER NO. ____
SHEET ___ OF ___

REQUESTS FOR INFORMATION NOT ADDRESSED IN THIS CCO REMAIN IN FORCE

MARK	DATE	DESCRIPTIONS	BY	CH'D	CCO#
3	05/18/09	TRAVELER RAIL MODIFICATIONS	MN	GB	2450
2	07/20/07	RAIL CHANGE & MISCELLANEOUS DETAILS	GB	NV	24
1	08/04/06	TRAVELER RAILS	GB	NV	24

REVISIONS

ALL DIMENSIONS ARE IN MILLIMETERS UNLESS OTHERWISE SHOWN

R. Vallizadeh/V. Toan/Y.L./W.L./F.C.
DESIGN OVERSIGHT
Ryan Vallizadeh / Vong Toan / Y. Liu
SIGN OFF DATE 05/18/09

	BY	CHECKED
DESIGN	J. Otter	G. Baker
DETAILS	J. Otter	M. Roberts
QUANTITIES	J. Otter	M. Roberts

PREPARED FOR THE STATE OF CALIFORNIA DEPARTMENT OF TRANSPORTATION

R. Manzanarez
PROJECT ENGINEER

BRIDGE NO. 34-0006L/R
KILOMETER POST 13.2/13.9

SAN FRANCISCO OAKLAND BAY BRIDGE
EAST SPAN SEISMIC SAFETY PROJECT
SELF-ANCHORED SUSPENSION BRIDGE (SUPERSTRUCTURE & TOWER)

TRAVELER RAIL DETAILS NO. 4

Rev. Date: 5-18-98

ORIGINAL SCALE IN MILLIMETERS FOR REDUCED PLANS 0 10 20 30 40 50 60 70 80 90 100

CU 04
EA 0120F1

DISREGARD PRINTS BEARING EARLIER REVISION DATES

REVISION DATES (PRELIMINARY STAGE ONLY) 04/15/02 07/20/02 12/19/02

SHEET 706R3 OF

FILE -> I:\bb\04-012001\sas\contract plans and cco\cco\cco#24s0\2-revision 05-18-09\dgn\aktrv115.dgn

100 % PS&E

USERNAME => dwinrow DATE PLOTTED => 19 MAY 2009 TIME PLOTTED => 16:39:54

DIST.	COUNTY	ROUTE	KILOMETER POST TOTAL PROJECT	SHEET NO.	TOTAL SHEETS
04	SF	80	13.2/13.9	1124R3	1204

Caltrans Metric

George Baker
REGISTERED ENGINEER - CIVIL
12-6-04
PLANS APPROVAL DATE

REGISTERED PROFESSIONAL ENGINEER George S. Baker No. C 57112 Exp. 12/31/05 CIVIL STATE OF CALIFORNIA

The State of California or its officers or agents shall not be responsible for the accuracy or completeness of electronic copies of this plan sheet.

T.Y. LIN / MOFFATT & NICHOL
825 BATTERY STREET
SAN FRANCISCO, CA 94111

Caltrans now has a web site! To get to the web site, go to: http://www.dot.ca.gov

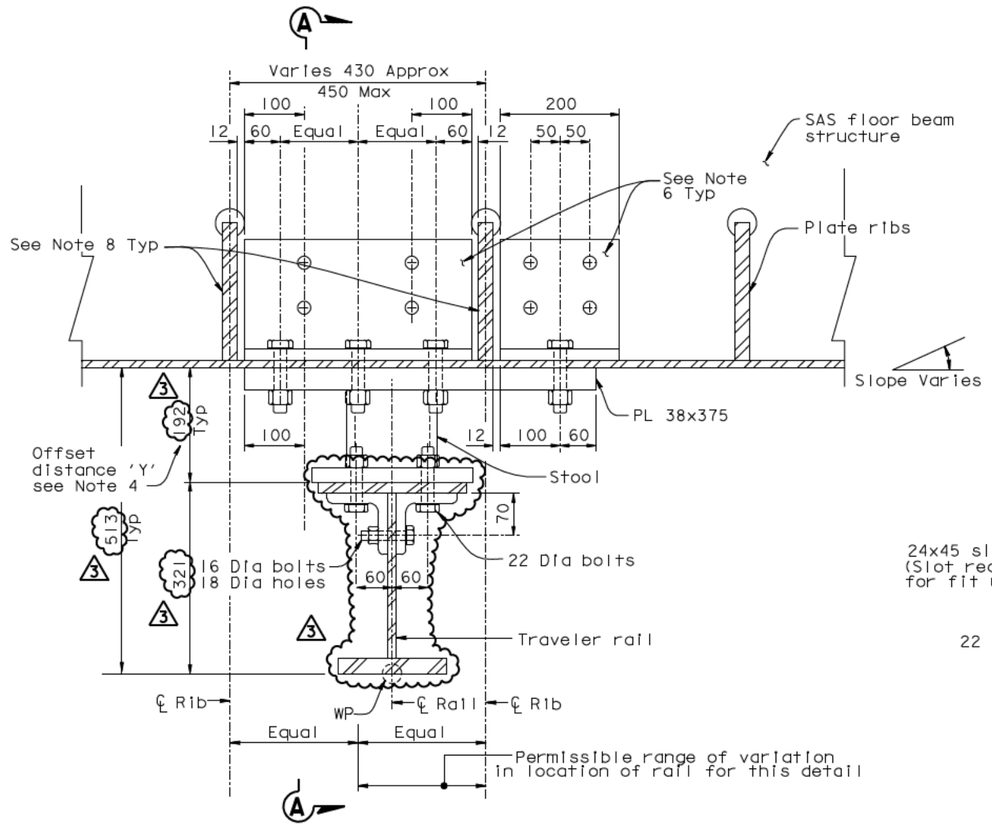

SAS RAIL MOUNTING HORIZONTAL SOFFIT

1:5

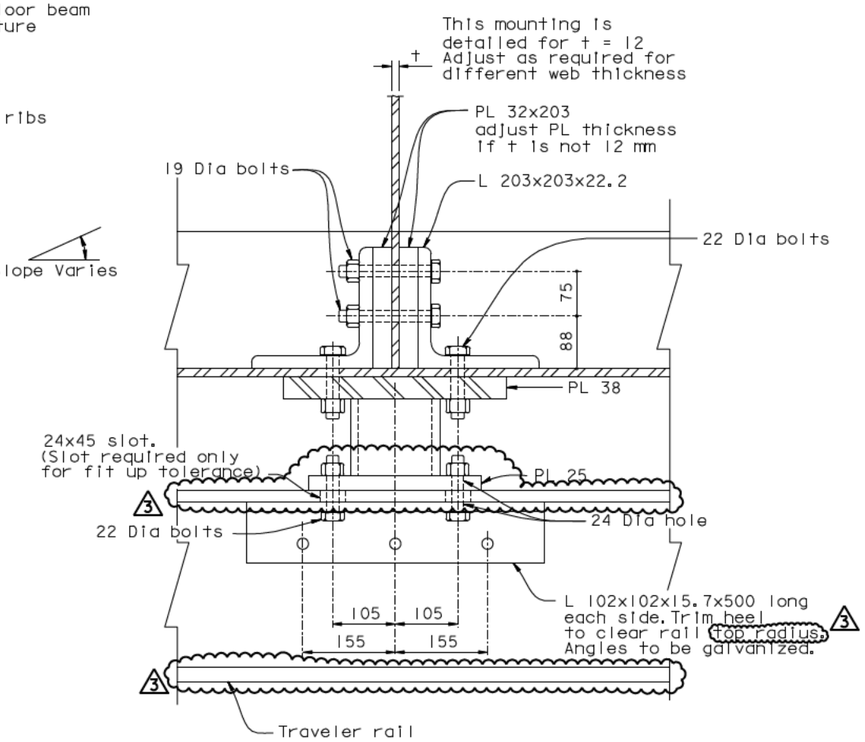

SECTION A-A

1:5

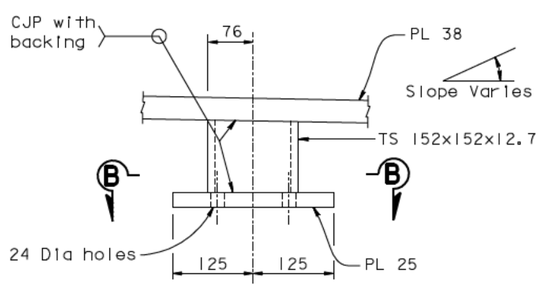

STOOL DETAIL

1:5

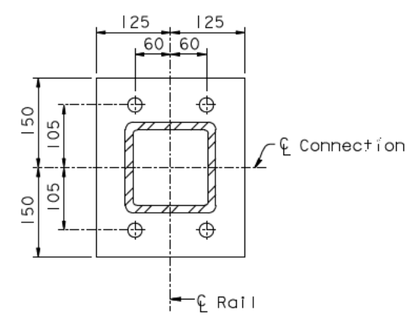

SECTION B-B

1:5

NOTES:

1. Rail to be vertical.
2. This detail applies on near "horizontal" structure of SAS with plate ribs at Max 450 c/c.
3. This detail applies for fixed (interior) rail connections.
4. This detail applies for offset distance 'Y' 186 to 380.
5. For Rail Details see "Traveler Rail Details No.1" sheet.
6. Interior connection angles 203x152 & 152x152 are to be painted all sides & attached to painted surfaces of SAS floor beam webs.
7. This connection accepts variation in the location of rail with respect to ribs within the limits shown.
8. Seal this space with caulking and retouch point after installation of angles.
9. For details not shown see connection FH-01 "Traveler Rail Details No.4" sheet.
10. For connections on skew, replace TS 152x152 with skewed fabricated section.

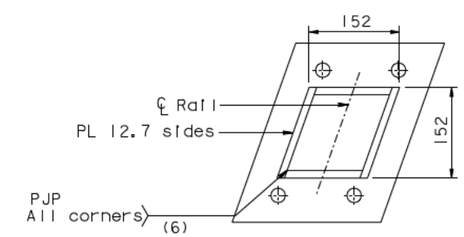

REGISTERED PROFESSIONAL ENGINEER Marwan N. Nader No. C 054426 Exp. 12/31/09 CIVIL STATE OF CALIFORNIA

FOR REVISIONS ONLY

3 REVISION 3 SUPERSEDES REVISIONS 1 & 2

CONTRACT CHANGE ORDER NO. ____
SHEET ___ OF ___

REQUESTS FOR INFORMATION NOT ADDRESSED IN THIS CCO REMAIN IN FORCE

CONNECTION FH-02

ALL DIMENSIONS ARE IN MILLIMETERS UNLESS OTHERWISE SHOWN

MARK	DATE	DESCRIPTIONS	BY	CH'D	CCO#
3	05/18/09	TRAVELER RAIL MODIFICATIONS	MN	GB	2450
2	07/20/07	RAIL CHANGE & MISCELLANEOUS DETAILS	GB	NV	24
1	08/04/06	TRAVELER RAILS	GB	NV	24

REVISIONS

R. Vallzadeh/V. Toan/Y.L./W.L./F.C.
DESIGN OVERSIGHT
Roya Valizadeh / Vong Toan / Y. Liu
SIGN OFF DATE 05/18/09

DESIGN	BY J. Otter	CHECKED G. Baker	
DETAILS	BY J. Otter	CHECKED M. Roberts	
QUANTITIES	BY J. Otter	CHECKED M. Roberts	

PREPARED FOR THE STATE OF CALIFORNIA DEPARTMENT OF TRANSPORTATION

R. Manzanarez
PROJECT ENGINEER

BRIDGE NO. 34-0006L/R
KILOMETER POST 13.2/13.9

SAN FRANCISCO OAKLAND BAY BRIDGE
EAST SPAN SEISMIC SAFETY PROJECT
SELF-ANCHORED SUSPENSION BRIDGE
(SUPERSTRUCTURE & TOWER)

TRAVELER RAIL DETAILS NO. 5

Rev. Date: 5-18-98

ORIGINAL SCALE IN MILLIMETERS FOR REDUCED PLANS 0 10 20 30 40 50 60 70 80 90 100

CU 04
EA 0120F1

DISREGARD PRINTS BEARING EARLIER REVISION DATES 04/15/02 07/24/02 12/19/02

REVISION DATES (PRELIMINARY STAGE ONLY)

SHEET 707R3 OF

FILE -> I:\bb\04-012001\sas\contract plans and cco\cco\cco#2450\2-revision 05-18-09\dgn\aktrv116.dgn

100 % PS&E

USERNAME => dwinrow DATE PLOTTED => 19 MAY 2009 TIME PLOTTED => 16:41:08

DIST.	COUNTY	ROUTE	KILOMETER POST TOTAL PROJECT	SHEET NO.	TOTAL SHEETS
04	SF	80	13.2/13.9	1125R4	1204

Caltrans Metric

George Baker
REGISTERED ENGINEER - CIVIL
12-6-04
PLANS APPROVAL DATE

REGISTERED PROFESSIONAL ENGINEER George S. Baker No. C 57112 Exp. 12/31/05 CIVIL STATE OF CALIFORNIA

The State of California or its officers or agents shall not be responsible for the accuracy or completeness of electronic copies of this plan sheet.

T.Y. LIN / MOFFATT & NICHOL
825 BATTERY STREET
SAN FRANCISCO, CA 94111

Caltrans now has a web site! To get to the web site, go to: http://www.dot.ca.gov

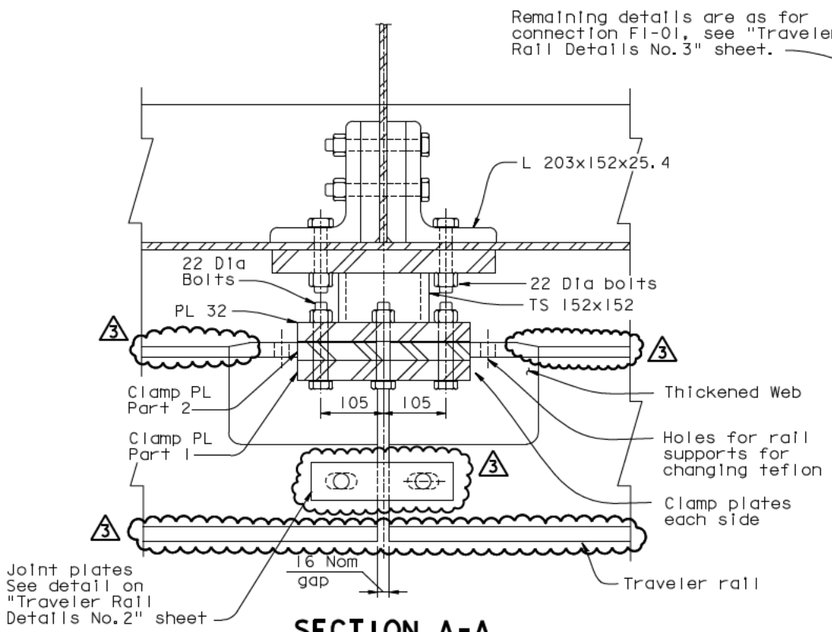

SECTION A-A
1:5 (See Note 13) 4

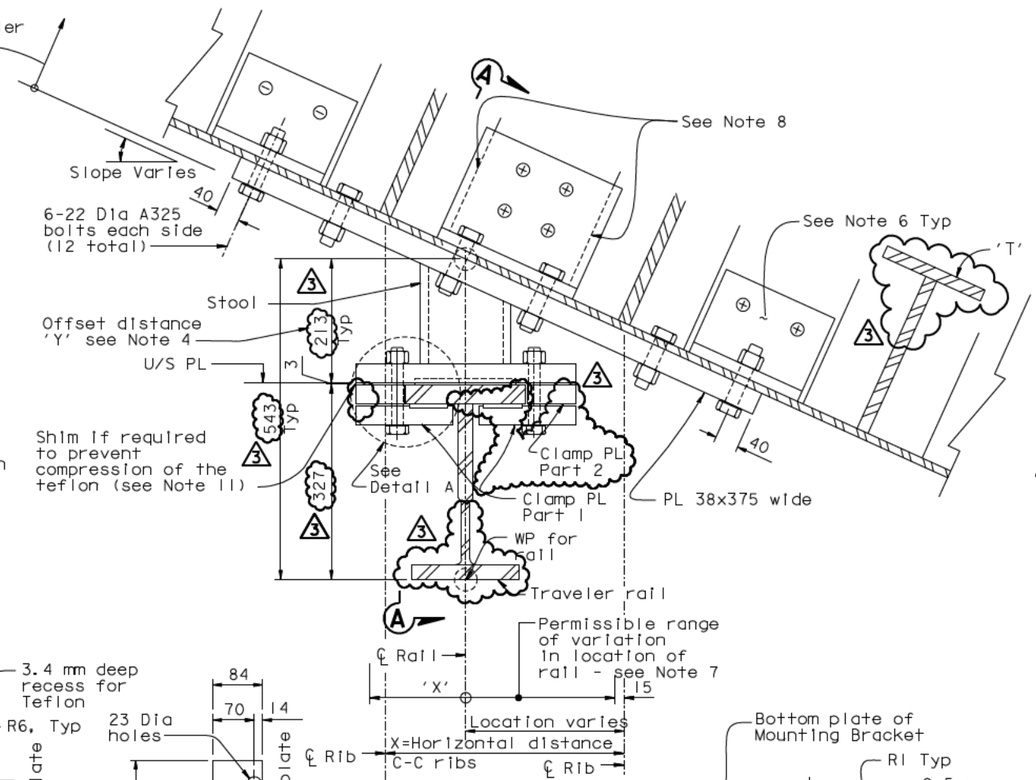

SAS RAIL MOUNTING, SLIDING SUPPORT, INCLINED SOFFIT
(See Note 12) 4 1:5

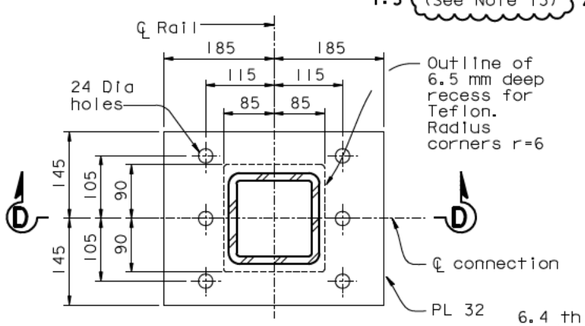

SECTION C-C
1:5

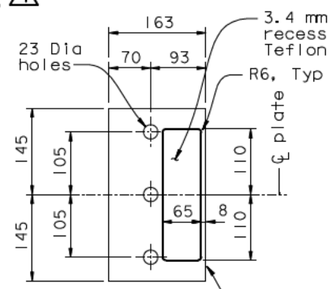

PLAN

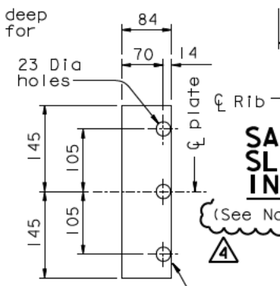

PLAN

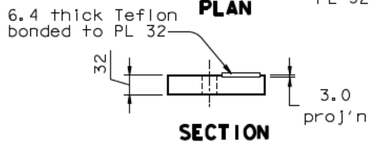

SECTION

CLAMP PLATE PART 1
1:5
(This material to be galvanized)

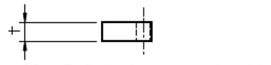

SECTION

CLAMP PLATES PART 2
1:5
(This material to be galvanized)

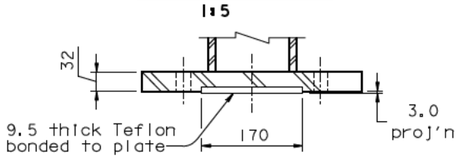

SECTION D-D
1:5

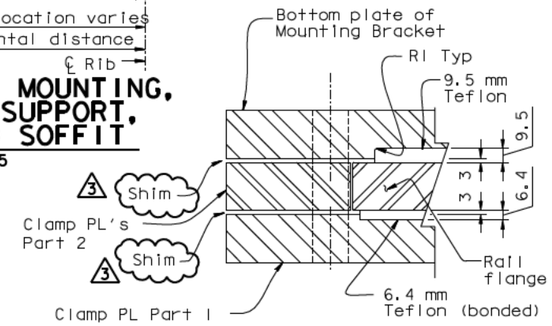

DETAIL A
1:2

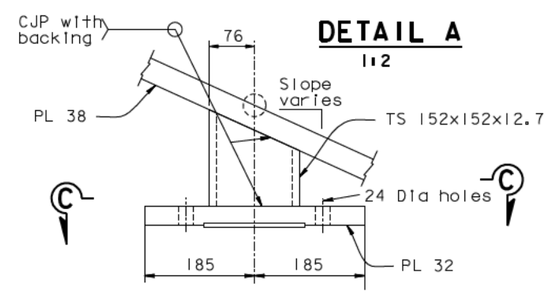

STOOL DETAIL
1:5

NOTES:

1. Rail to be vertical.
2. This detail applies on sloping soffit faces of SAS structure with T ribs at Max 450 c/c.
3. This detail applies for sliding (expansion) rail connections.
4. This detail applies for offset distance 'Y' 213 to 380. 3
5. For Rail Details see "Traveler Rail Details No.1" sheet.
6. Interior connection angles 203x152 & 152x152 are to be painted all sides & attached to painted surfaces of SAS floor beam webs.
7. This connection accepts variation in the location of rail with respect to ribs within the limits shown.
8. Seal this space with caulking and retouch paint after installation of angles.
9. For connections on skew, replace TS 152x152 with, skewed fabricated section & skew the bolt holes.

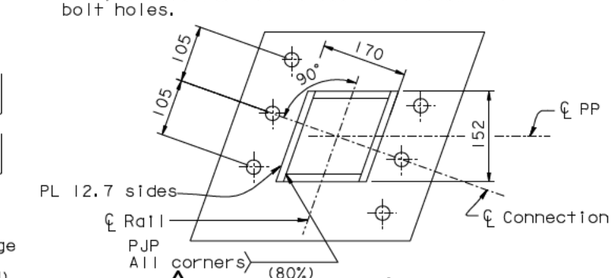

10. Supply clamp plates sets 3 3
    Basic clamp plate Part 2 28 thick
    Shims 3.0 & 1.0 thick to allow adjustment in the field
11. Installation Note
    Fit up connections & snug bolts. If Teflon is being compressed by this, add shim plates as required. If Teflon to steel steel gap exceeds 1.5 mm, remove shims as required. Tension bolts after fit-up. 3
12. For details at PP113 & PP115, see "Traveler Rail Details No. 3B" sheet. For details at PP112, PP114 & PP116, see "Traveler Rail Details No. 3C" sheet. 4
13. For Section A-A at PP116, see "Traveler Rail Details No. 6A" sheet.

CONNECTION S1-01

3 REVISION 3 SUPERSEDES REVISIONS 1 & 2

CONTRACT CHANGE ORDER NO. ____
SHEET ___ OF ___

REGISTERED PROFESSIONAL ENGINEER Mar Vorn N. Nader No. C 054426 Exp. 12/31/11 CIVIL STATE OF CALIFORNIA

FOR REVISIONS ONLY

REQUESTS FOR INFORMATION NOT ADDRESSED IN THIS CCO REMAIN IN FORCE

MARK	DATE	DESCRIPTIONS	BY	CH'D	CCO#
4	03/19/10	TRAVELER RAIL MODIFICATIONS	MN	GB	2450
3	05/18/09	TRAVELER RAIL MODIFICATIONS	MN	GB	2450
2	07/20/07	RAIL CHANGE & MISCELLANEOUS DETAILS	GB	NV	24
1	08/04/06	TRAVELER RAILS	GB	NV	24

REVISIONS

R. Vallizadeh/V. Toan/Y.L./W.L./F.C.
DESIGN OVERSIGHT
Roya Vallizadeh / Vong Toan / Y. Liu
SIGN OFF DATE 03/19/10

Rev. Date: 5-18-98

DESIGN	BY J. Otter	CHECKED G. Baker	
DETAILS	BY J. Otter	CHECKED M. Roberts	
QUANTITIES	BY J. Otter	CHECKED M. Roberts	

PREPARED FOR THE STATE OF CALIFORNIA DEPARTMENT OF TRANSPORTATION

R. Manzanarez
PROJECT ENGINEER

BRIDGE NO. 34-0006L/R
KILOMETER POST 13.2/13.9

ALL DIMENSIONS ARE IN MILLIMETERS UNLESS OTHERWISE SHOWN

ORIGINAL SCALE IN MILLIMETERS FOR REDUCED PLANS 0 10 20 30 40 50 60 70 80 90 100

CU 04
EA 0120F1

DISREGARD PRINTS BEARING EARLIER REVISION DATES

REVISION DATES (PRELIMINARY STAGE ONLY) 04/18/02 07/09/02 12/19/02

SHEET 708R4 OF

SAN FRANCISCO OAKLAND BAY BRIDGE
EAST SPAN SEISMIC SAFETY PROJECT
SELF-ANCHORED SUSPENSION BRIDGE
(SUPERSTRUCTURE & TOWER)

TRAVELER RAIL DETAILS NO. 6

FILE -> I:\bb\04-012001\sas\contract plans and cco\cco\cco#24s0\8-revision 03-19-10\dgn\aktrvl17.dgn

100% PS&E

USERNAME => dwinrow DATE PLOTTED => 18 MAR 2010 TIME PLOTTED => 09:32:57

DIST.	COUNTY	ROUTE	KILOMETER POST TOTAL PROJECT	SHEET NO.	TOTAL SHEETS
04	SF	80	13.2/13.9	11251	1204

Caltrans Metric

REGISTERED ENGINEER - CIVIL

03-05-10

PLANS APPROVAL DATE

REGISTERED PROFESSIONAL ENGINEER Bashkim Prishtina No. C 053561 Exp. 6/30/11 CIVIL STATE OF CALIFORNIA

The State of California or its officers or agents shall not be responsible for the accuracy or completeness of electronic copies of this plan sheet.

T.Y. LIN / MOFFATT & NICHOL
825 BATTERY STREET
SAN FRANCISCO, CA 94111

Caltrans now has a web site! To get to the web site, go to: http://www.dot.ca.gov

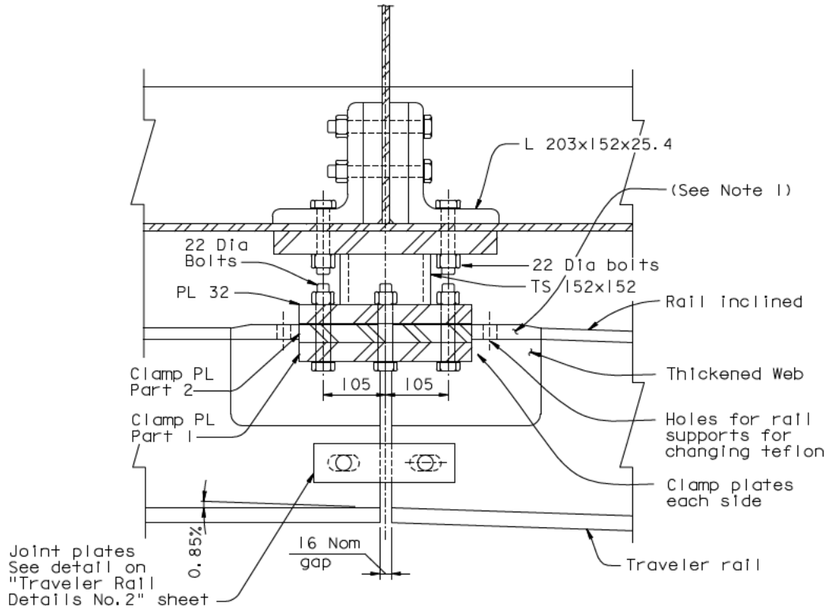

SECTION A-A @ PP116 (SOUTH RAIL ONLY)

1:5

NOTES:

1. The top flange of the T-section is parallel to the bridge deck, and is welded to the rail that is inclined by 0.85% from the bridge deck.

CONTRACT CHANGE ORDER NO. ____
SHEET ____ OF ____

REQUESTS FOR INFORMATION NOT ADDRESSED IN THIS CCO REMAIN IN FORCE

ALL DIMENSIONS ARE IN MILLIMETERS UNLESS OTHERWISE SHOWN

R. Valizadeh/V. Toan/Y.L./W.L./F.C.
DESIGN OVERSIGHT
SIGN OFF DATE 03/05/10

MARK	DATE	DESCRIPTIONS	BY	CH'D	CCO#
0	03/05/10	TRAVELER RAIL MODIFICATIONS	BP	AS	24S0

REVISIONS

DESIGN BY J. Otter CHECKED A. Sanjines
DETAILS BY J. Otter CHECKED A. Sanjines
QUANTITIES BY J. Otter CHECKED A. Sanjines

PREPARED FOR THE STATE OF CALIFORNIA DEPARTMENT OF TRANSPORTATION

R. Manzanarez
PROJECT ENGINEER

BRIDGE NO. 34-0006L/R
KILOMETER POST 13.2/13.9

SAN FRANCISCO OAKLAND BAY BRIDGE
EAST SPAN SEISMIC SAFETY PROJECT
SELF-ANCHORED SUSPENSION BRIDGE
(SUPERSTRUCTURE & TOWER)

TRAVELER RAIL DETAILS NO. 6A

Rev. Date: 5-18-98

ORIGINAL SCALE IN MILLIMETERS FOR REDUCED PLANS 0 10 20 30 40 50 60 70 80 90 100

CU 04
EA 0120F1

DISREGARD PRINTS BEARING EARLIER REVISION DATES 03/05/10

REVISION DATES (PRELIMINARY STAGE ONLY)

SHEET 708S1 OF

FILE -> I:\bb\04-012001\sas\contract plans and cco\cco\cco#24s0\7-revision 03-05-10\dgn\aktrv117a.dgn

100% PS&E

USERNAME => arivera DATE PLOTTED => 05 MAR 2010 TIME PLOTTED => 07:47:26

DIST.	COUNTY	ROUTE	KILOMETER POST TOTAL PROJECT	SHEET NO.	TOTAL SHEETS
04	SF	80	13.2/13.9	1126R3	1204

Caltrans Metric

George Baker
REGISTERED ENGINEER - CIVIL
12-6-04
PLANS APPROVAL DATE

REGISTERED PROFESSIONAL ENGINEER George S. Baker No. C 57112 Exp. 12/31/05 CIVIL STATE OF CALIFORNIA

The State of California or its officers or agents shall not be responsible for the accuracy or completeness of electronic copies of this plan sheet.

T.Y. LIN / MOFFATT & NICHOL
825 BATTERY STREET
SAN FRANCISCO, CA 94111

Caltrans now has a web site! To get to the web site, go to: http://www.dot.ca.gov

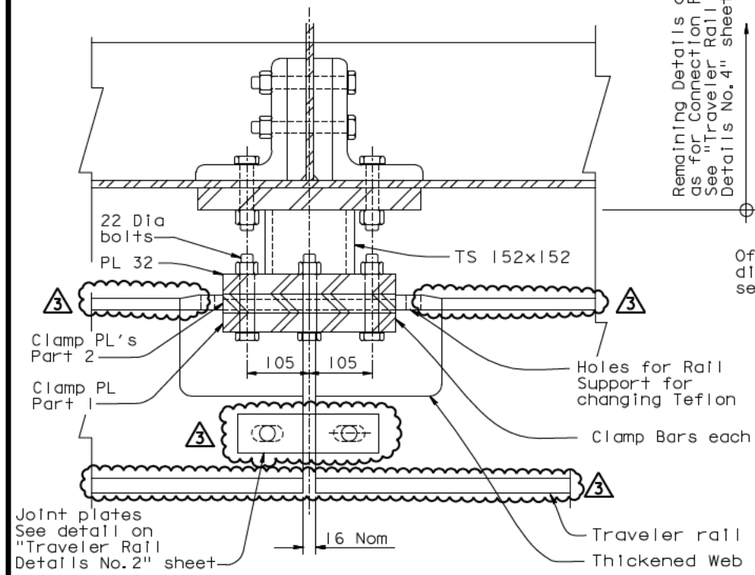

SECTION A-A
1:5

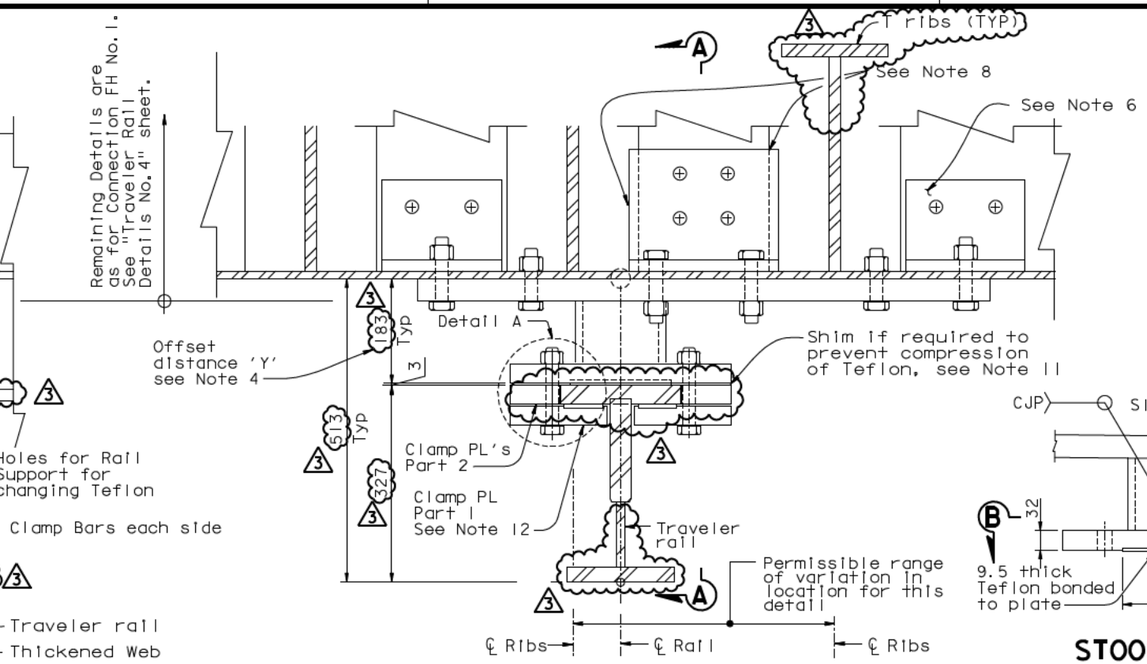

SAS RAIL MOUNTING, SLIDING SUPPORT HORIZONTAL SOFFIT
1:5

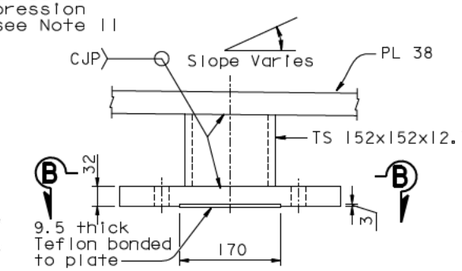

STOOL DETAIL
1:5

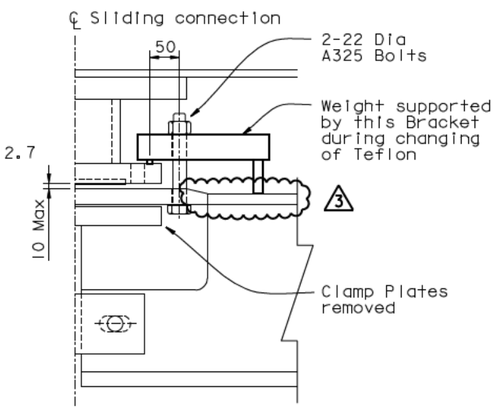

TEMPORARY SUPPORT AT SLIDING CONNECTIONS DURING CHANGING OF TEFLON
1:5

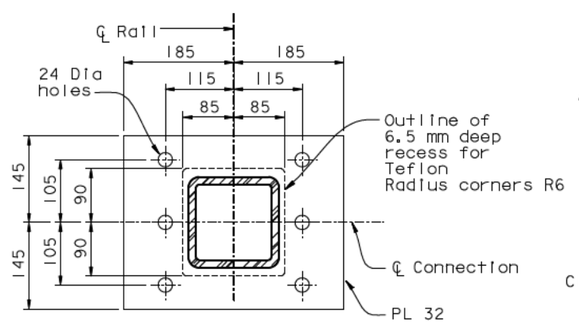

SECTION B-B
1:5

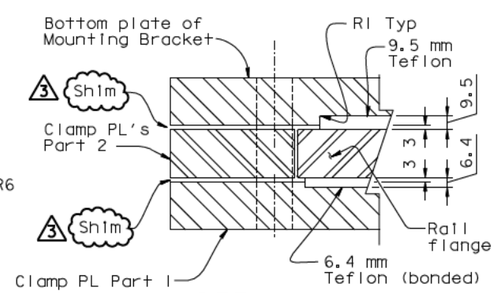

DETAIL A
1:2

NOTES:

1. Rail to be vertical.
2. This detail applies on near horizontal soffit of SAS structure with T ribs at Max 450 c/c.
3. This detail applies for sliding (expansion) rail connections.
4. This detail applies for offset distance 'Y' (183) to 380.
5. For Rail Details see "Traveler Rail Details No. 1" sheet.
6. Interior connection angles 203x152 & 152x152 are to be painted all sides & attached to painted surfaces of SAS floor beam webs.
7. This connection accepts variation in the location of rail with respect to ribs within the limits shown.
8. Seal this space with caulking and retouch paint after installation of angles.
9. For connections on skew, replace TS 152x152 with skewed fabricated section.

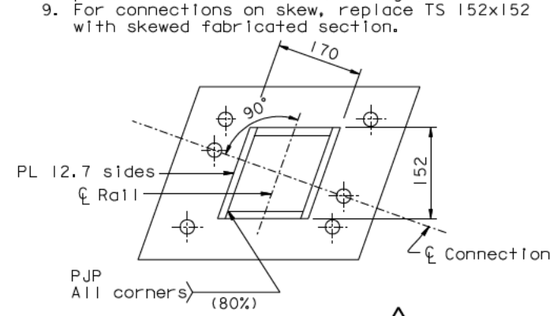

10. Supply clamp plates sets. (3)
    (3) Basic clamp plate (Part 2) 28 thick Shims 3.0 & 1.0 thick to allow adjustment in the field
11. Installation Note
    Fit up connections & snug bolts. If Teflon is being compressed by this, add shim plates as required. If Teflon to steel steel gap exceeds 1.5 mm, add shims as required. Tension bolts after fit-up. (3)
12. For Clamp Plate Details see "Traveler Rail Details No. 6" sheet.

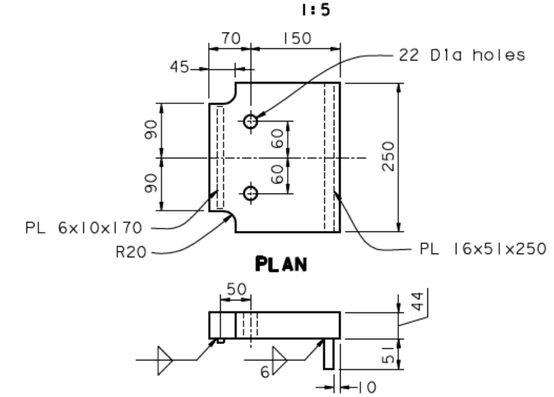

TEMPORARY SUPPORT BRACKET
1:5
(Supply 32 as shown)

REGISTERED PROFESSIONAL ENGINEER Marwan N. Nader No. C 054426 Exp. 12/31/09 CIVIL STATE OF CALIFORNIA

FOR REVISIONS ONLY

(3) REVISION (3) SUPERSEDES REVISIONS (1) & (2)

CONTRACT CHANGE ORDER NO. ____
SHEET ___ OF ___

REQUESTS FOR INFORMATION NOT ADDRESSED IN THIS CCO REMAIN IN FORCE

MARK	DATE	DESCRIPTIONS	BY	CH'D	CCO#
3	05/18/09	TRAVELER RAIL MODIFICATIONS	MN	GB	2450
2	07/20/07	RAIL CHANGE & MISCELLANEOUS DETAILS	GB	NV	24
1	08/04/06	TRAVELER RAILS	GB	NV	24

REVISIONS

R. Valizadeh/V. Toan/Y.L./W.L./F.C.
DESIGN OVERSIGHT
SIGN OFF DATE 05/18/09

Rev. Date: 5-18-98

CONNECTION SH-01

DESIGN	BY J. Otter	CHECKED G. Baker	
DETAILS	BY J. Otter	CHECKED M. Roberts	
QUANTITIES	BY J. Otter	CHECKED M. Roberts	

PREPARED FOR THE STATE OF CALIFORNIA DEPARTMENT OF TRANSPORTATION

R. Manzanarez
PROJECT ENGINEER

ALL DIMENSIONS ARE IN MILLIMETERS UNLESS OTHERWISE SHOWN

ORIGINAL SCALE IN MILLIMETERS FOR REDUCED PLANS 0 10 20 30 40 50 60 70 80 90 100

CU 04
EA 0120F1

BRIDGE NO. 34-0006L/R
KILOMETER POST 13.2/13.9

DISREGARD PRINTS BEARING EARLIER REVISION DATES 04/18/02 07/20/02 12/19/02

SAN FRANCISCO OAKLAND BAY BRIDGE
EAST SPAN SEISMIC SAFETY PROJECT
SELF-ANCHORED SUSPENSION BRIDGE (SUPERSTRUCTURE & TOWER)

TRAVELER RAIL DETAILS NO. 7

SHEET 709R3 OF

FILE -> I:\bb\04-012001\sas\contract plans and cco\cco\cco#2450\2-revision 05-18-09\dgn\aktrvl18.dgn

100% PS&E
USERNAME => dwinrow DATE PLOTTED => 19 MAY 2009 TIME PLOTTED => 16:43:10

DIST.	COUNTY	ROUTE	KILOMETER POST TOTAL PROJECT	SHEET NO.	TOTAL SHEETS
04	SF	80	13.2/13.9	1127R3	1204

Caltrans Metric

George Baker
REGISTERED ENGINEER - CIVIL
12-6-04
PLANS APPROVAL DATE

REGISTERED PROFESSIONAL ENGINEER George S. Baker No. C 57112 Exp. 12/31/05 CIVIL STATE OF CALIFORNIA

The State of California or its officers or agents shall not be responsible for the accuracy or completeness of electronic copies of this plan sheet.

T.Y. LIN / MOFFATT & NICHOL
825 BATTERY STREET
SAN FRANCISCO, CA 94111

Caltrans now has a web site! To get to the web site, go to: http://www.dot.ca.gov

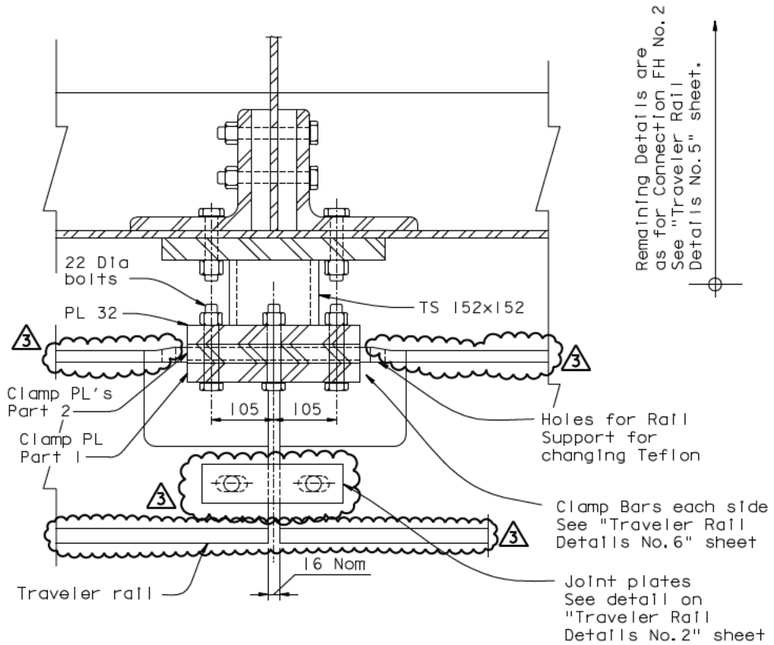

SECTION A-A
1:5

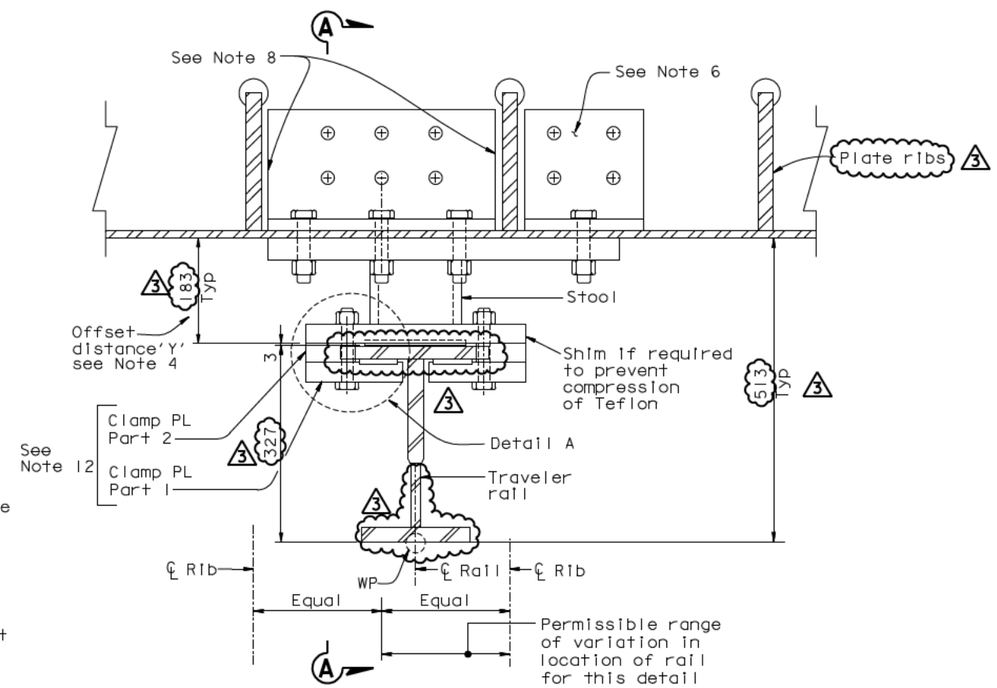

SAS RAIL MOUNTING, SLIDING SUPPORT HORIZONTAL SOFFIT
1:5

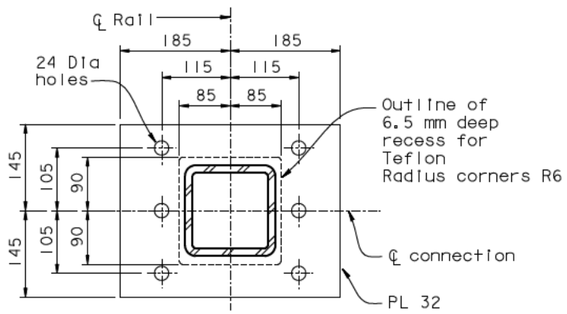

SECTION B-B
1:5

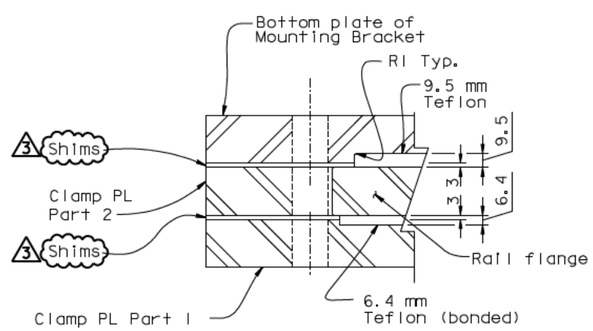

DETAIL A
1:2

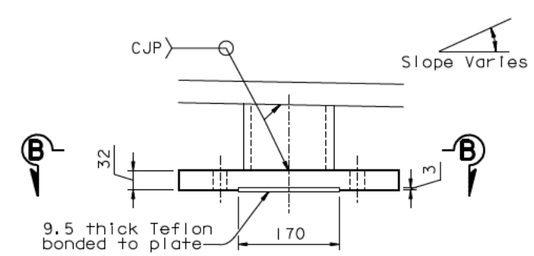

STOOL DETAIL
1:5

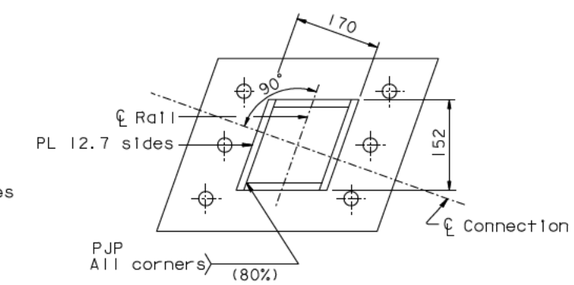

NOTES:

1. Rail to be vertical.
2. This detail applies on near horizontal soffit of SAS with plate ribs at Max 450 c/c.
3. This detail applies for sliding (expansion) rail connections.
4. This detail applies for offset distance 'Y' 183 to 380.
5. For rail details see "Traveler Rail Details No. 1" sheet.
6. Interior connection angles 203x152 & 152x152 are to be painted all sides & attached to painted surfaces of SAS floor beam webs.
7. This connection accepts variation in the location of rail with respect to ribs within the limits shown.
8. Seal this space with caulking and retouch paint after installation of angles.
9. For details not shown see connection FH-01 "Traveler Rail Details No. 4" sheet.
10. For connections on skew, replace TS 152 with skewed fabricated section.
11. Supply clamp plates sets 3 3
    Basic clamp plate part 2 28 thick
    Shims 3.0 & 1.0 thick to allow adjustment in the field
12. Installation note
    Fit up connections & snug bolts. If Teflon is being compressed by this, add shim plates as required. If Teflon to steel steel gap exceeds 1.5 mm, add shims as required. Tension bolts after fit-up 3
13. For Clamp Plate Details see "Traveler Rail Details No. 6" sheet.

REGISTERED PROFESSIONAL ENGINEER Maryan N. Nader No. C 054426 Exp. 12/31/09 CIVIL STATE OF CALIFORNIA

FOR REVISIONS ONLY

3 REVISION 3 SUPERSEDES REVISIONS 1 & 2

CONTRACT CHANGE ORDER NO. ____
SHEET ___ OF ___

REQUESTS FOR INFORMATION NOT ADDRESSED IN THIS CCO REMAIN IN FORCE

MARK	DATE	DESCRIPTIONS	BY	CH'D	CCO#
3	05/18/09	TRAVELER RAIL MODIFICATIONS	MN	GB	24S0
2	07/20/07	RAIL CHANGE & MISCELLANEOUS DETAILS	GB	NV	24
1	08/04/06	TRAVELER RAILS	GB	NV	24

REVISIONS

CONNECTION SH-02

ALL DIMENSIONS ARE IN MILLIMETERS UNLESS OTHERWISE SHOWN

R. Vallzadeh/V. Toan/Y.L./W.L./F.C.
DESIGN OVERSIGHT
Roya Valizadeh / Vong Toan / Y. Liu
SIGN OFF DATE 05/18/09

	BY	CHECKED
DESIGN	J. Otter	G. Baker
DETAILS	J. Otter	M. Roberts
QUANTITIES	J. Otter	M. Roberts

PREPARED FOR THE STATE OF CALIFORNIA DEPARTMENT OF TRANSPORTATION

R. Manzanarez
PROJECT ENGINEER

BRIDGE NO. 34-0006L/R
KILOMETER POST 13.2/13.9

SAN FRANCISCO OAKLAND BAY BRIDGE
EAST SPAN SEISMIC SAFETY PROJECT
SELF-ANCHORED SUSPENSION BRIDGE
(SUPERSTRUCTURE & TOWER)

TRAVELER RAIL DETAILS NO. 8

Rev. Date: 5-18-98

ORIGINAL SCALE IN MILLIMETERS FOR REDUCED PLANS 0 10 20 30 40 50 60 70 80 90 100

CU 04
EA 0120F1

DISREGARD PRINTS BEARING EARLIER REVISION DATES 04/15/02 07/20/02 12/19/02

REVISION DATES (PRELIMINARY STAGE ONLY)

SHEET 710R3 OF

FILE -> I:\bb\04-012001\sas\contract plans and cco\cco\cco#24s0\2-revision 05-18-09\dgn\aktrv119.dgn

100 % PS&E

USERNAME => dwinrow DATE PLOTTED => 19 MAY 2009 TIME PLOTTED => 16:44:20

DIST.	COUNTY	ROUTE	KILOMETER POST TOTAL PROJECT	SHEET NO.	TOTAL SHEETS
04	SF	80	13.2/13.9	1128R4	1204

Caltrans Metric

George Baker
REGISTERED ENGINEER - CIVIL
12-6-04
PLANS APPROVAL DATE

REGISTERED PROFESSIONAL ENGINEER George S. Baker No. C 57112 Exp. 12/31/05 CIVIL STATE OF CALIFORNIA

The State of California or its officers or agents shall not be responsible for the accuracy or completeness of electronic copies of this plan sheet.

T.Y. LIN / MOFFATT & NICHOL
825 BATTERY STREET
SAN FRANCISCO, CA 94111

Caltrans now has a web site! To get to the web site, go to: http://www.dot.ca.gov

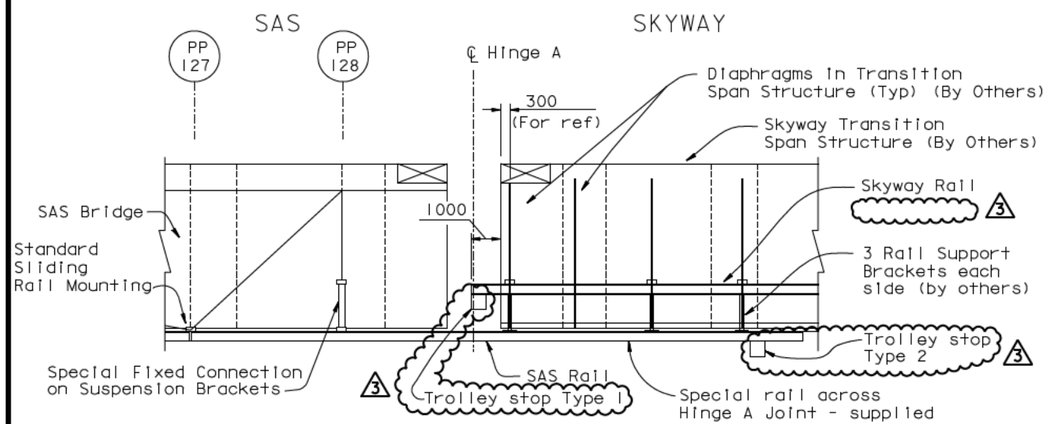

ELEVATION
1:100

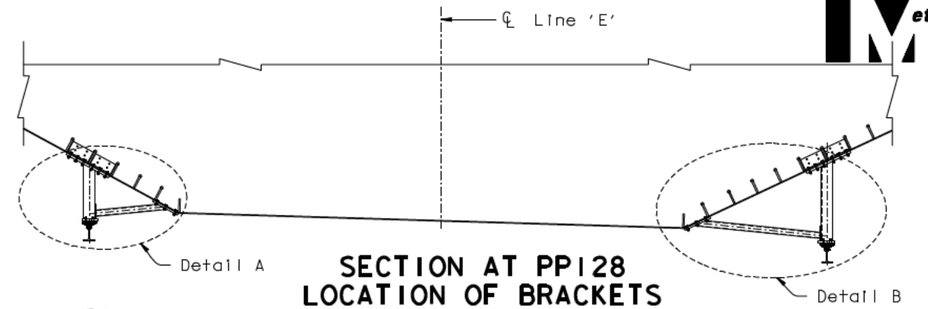

SECTION AT PP128 LOCATION OF BRACKETS EB SHOWN, WB SIMILAR
1:50

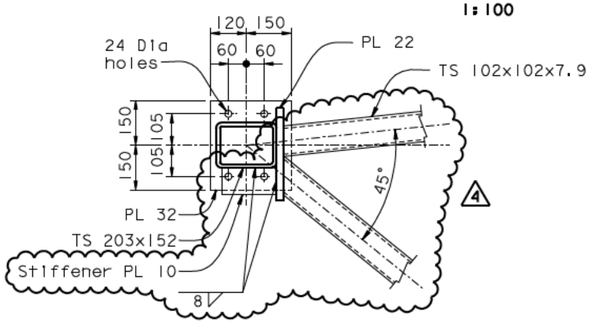

DETAIL C
1:10

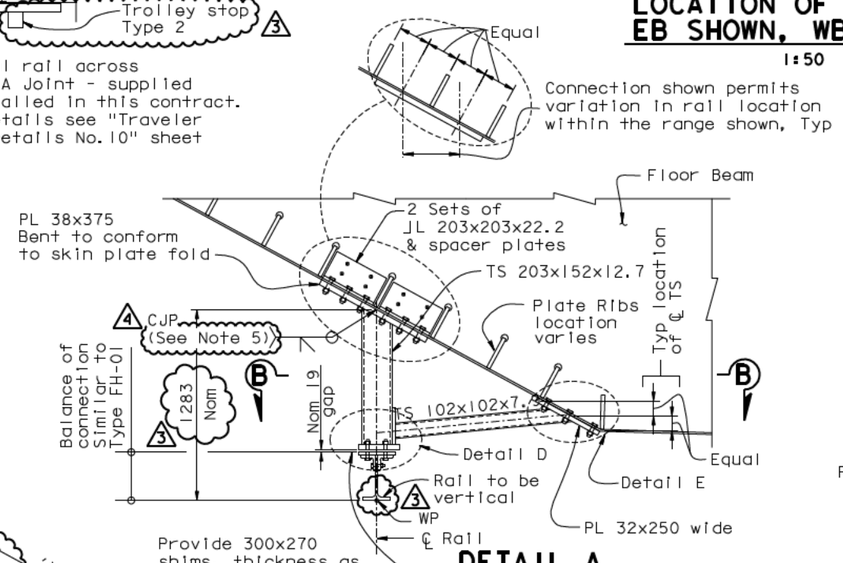

DETAIL A
1:20

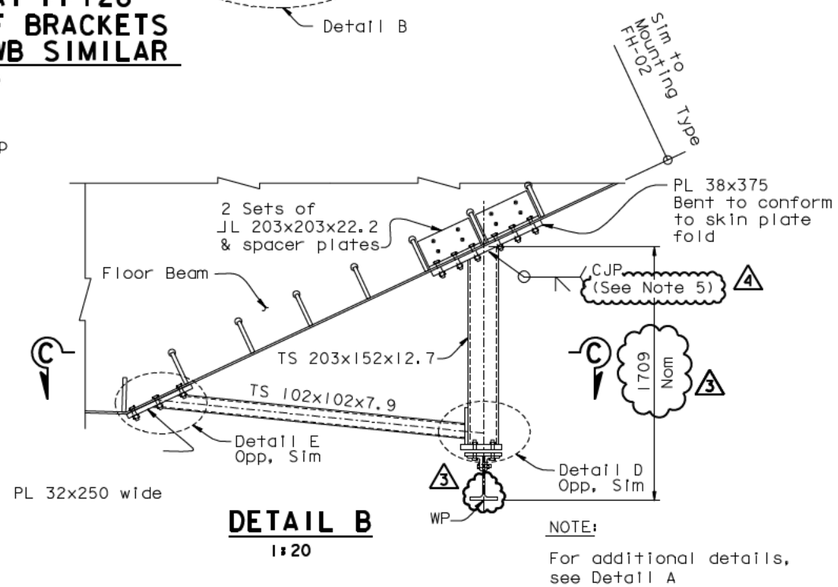

DETAIL B
1:20

NOTE:

For additional details, see Detail A

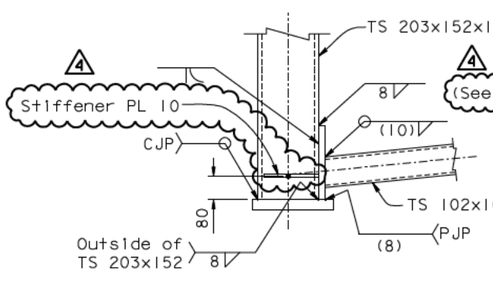

DETAIL D
1:10

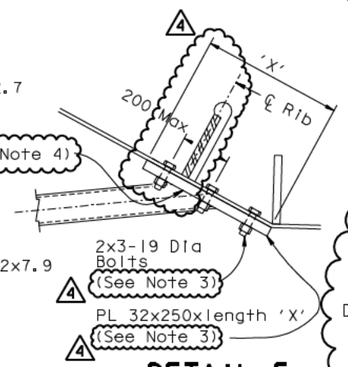

DETAIL E
1:10

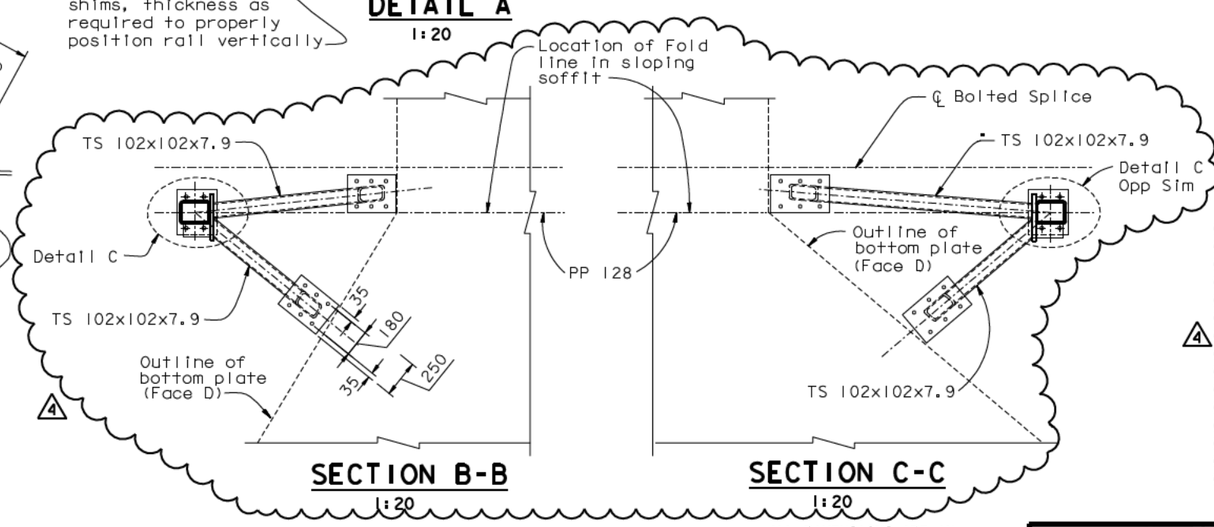

SECTION B-B
1:20

SECTION C-C
1:20

NOTES:

1. For Mounting Type FH-01, see "Traveler Rail Details No. 4" sheet.
2. For Mounting Type FH-02, see "Traveler Rail Details No. 5" sheet.
3. Adjust bolt hole locations and length 'X' to clear plate stiffener and meet tightening clearances and spacing requirements.
4. Use of a 10 mm all around fillet weld is acceptable when limited access prevents a CJP weld.
5. Use a CJP with backing bar to remain on three sides and an 18 mm fillet weld on the fourth side. The 18 mm fillet weld shall be located on the acute between tube and plate.

REGISTERED PROFESSIONAL ENGINEER Marwan N. Nader No. C 054426 Exp. 12/31/11 CIVIL STATE OF CALIFORNIA

FOR REVISIONS ONLY

REVISION 3 SUPERSEDES REVISIONS 1 & 2

CONTRACT CHANGE ORDER NO. ____
SHEET ___ OF ___

REQUESTS FOR INFORMATION NOT ADDRESSED IN THIS CCO REMAIN IN FORCE

MARK	DATE	DESCRIPTIONS	BY	CH'D	CCO#
4	03/05/10	TRAVELER RAIL MODIFICATIONS	MN	GB	2450
3	05/18/09	TRAVELER RAIL MODIFICATIONS	MN	GB	2450
2	07/20/07	RAIL CHANGE & MISCELLANEOUS DETAILS	GB	NV	24
1	08/04/06	TRAVELER RAILS	GB	NV	24

REVISIONS

ALL DIMENSIONS ARE IN MILLIMETERS UNLESS OTHERWISE SHOWN

R. Vallizadeh/V. Toan/Y.L./W.L./F.C.
DESIGN OVERSIGHT
SIGN OFF DATE 03/09/10

	BY	CHECKED
DESIGN	J. Otter	G. Baker
DETAILS	J. Otter	M. Roberts
QUANTITIES	J. Otter	M. Roberts

PREPARED FOR THE STATE OF CALIFORNIA DEPARTMENT OF TRANSPORTATION

R. Manzanarez
PROJECT ENGINEER

BRIDGE NO. 34-0006L/R
KILOMETER POST 13.2/13.9

SAN FRANCISCO OAKLAND BAY BRIDGE
EAST SPAN SEISMIC SAFETY PROJECT
SELF-ANCHORED SUSPENSION BRIDGE
(SUPERSTRUCTURE & TOWER)

TRAVELER RAIL DETAILS NO. 9

Rev. Date: 5-18-98

ORIGINAL SCALE IN MILLIMETERS FOR REDUCED PLANS 0 10 20 30 40 50 60 70 80 90 100

CU 04
EA 0120F1

DISREGARD PRINTS BEARING EARLIER REVISION DATES

REVISION DATES (PRELIMINARY STAGE ONLY) 04/18/02 07/09/02 12/19/02

SHEET 71 OF 1R4

FILE -> I:\bb\04-012001\sas\contract plans and cco\cco\cco#2450\7-revision 03-05-10\dgn\aktrvl19a.dgn

USERNAME => arivera DATE PLOTTED => 05 MAR 2010 TIME PLOTTED => 07:49:05

100% PS&E

DIST.	COUNTY	ROUTE	KILOMETER POST TOTAL PROJECT	SHEET NO.	TOTAL SHEETS
04	SF	80	13.2/13.9	1129R3	1204

Caltrans Metric

George Baker
REGISTERED ENGINEER - CIVIL
12-6-04
PLANS APPROVAL DATE

REGISTERED PROFESSIONAL ENGINEER George S. Baker No. C 57112 Exp. 12/31/05 CIVIL STATE OF CALIFORNIA

The State of California or its officers or agents shall not be responsible for the accuracy or completeness of electronic copies of this plan sheet.

T.Y. LIN / MOFFATT & NICHOL
825 BATTERY STREET
SAN FRANCISCO, CA 94111

Caltrans now has a web site! To get to the web site, go to: http://www.dot.ca.gov

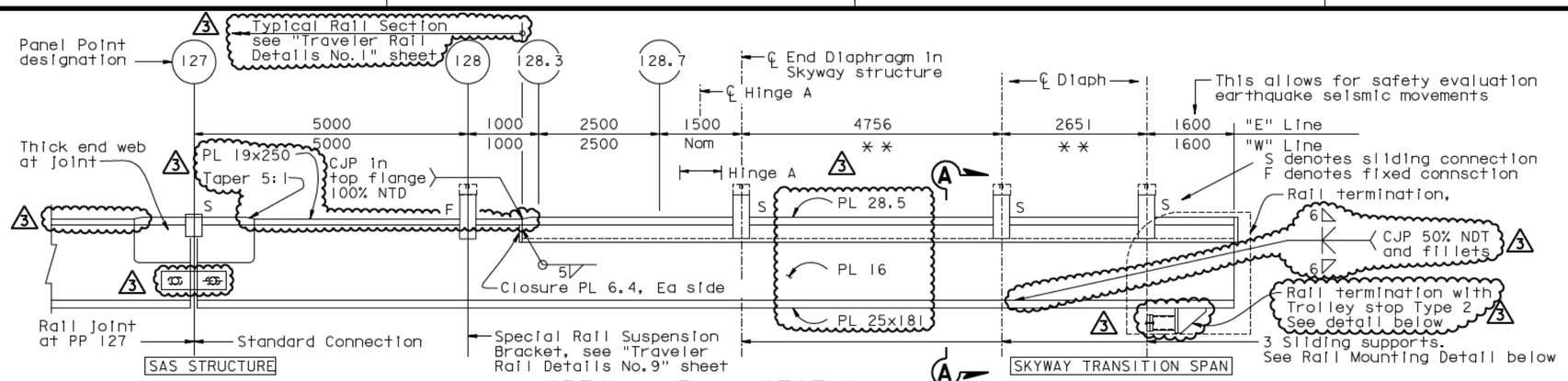

SPECIAL RAIL SECTION

NTS

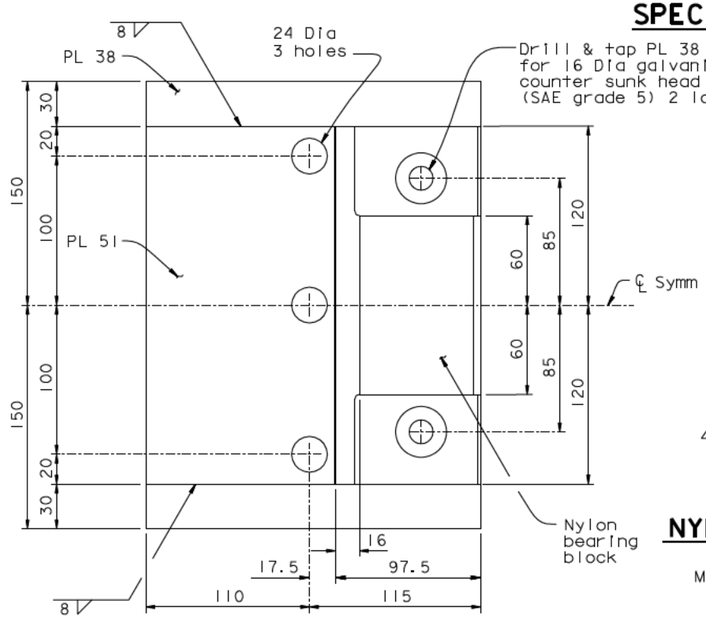

SUPPORT BEARING ASSEMBLY DETAIL

1:5

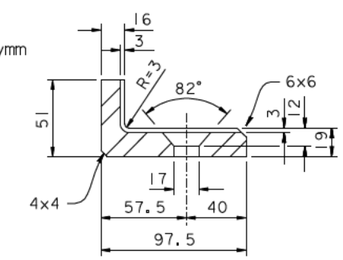

NYLON BEARING DETAIL

1:2

Material - unfilled nylon 101

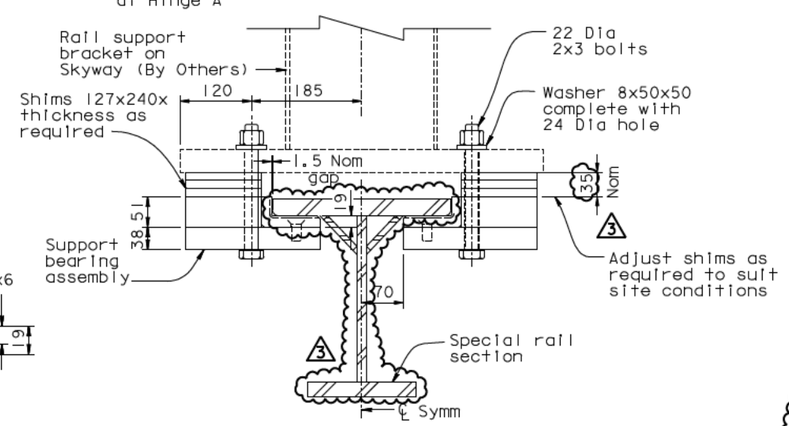

RAIL MOUNTING AT SLIDING SUPPORTS

1:5

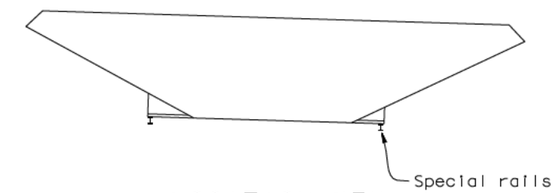

LOCATION KEY

NTS

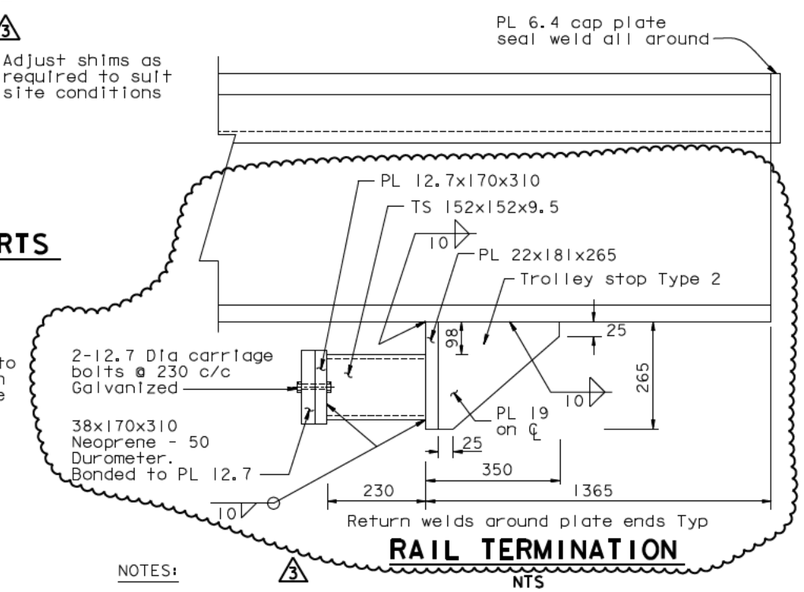

RAIL TERMINATION

NTS

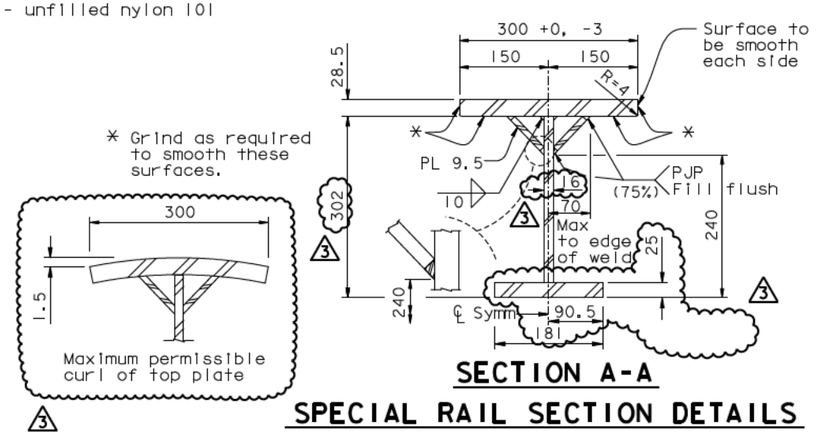

SECTION A-A

SPECIAL RAIL SECTION DETAILS

1:5

NOTES:

1. ** Denotes dimension on "W" Line which will place supports on centreline diaphragms. Dimension varies. Refer to Skyway Transition Span (Traveler Rail Details sheets) in Skyway Contract.
2. Fabricator to co-ordinate details with Skyway Structures Contract 04-12024. Field measure before fabrication.
3. For further details see "Traveler Rail Details No.9" sheet.

REGISTERED PROFESSIONAL ENGINEER Marwan N. Nader No. C 054426 Exp. 12/31/09 CIVIL STATE OF CALIFORNIA

FOR REVISIONS ONLY

REVISION 3 SUPERSEDES REVISIONS 1 & 2

CONTRACT CHANGE ORDER NO. ____
SHEET ___ OF ___

REQUESTS FOR INFORMATION NOT ADDRESSED IN THIS CCO REMAIN IN FORCE

MARK	DATE	DESCRIPTIONS	BY	CH'D	CCO#
3	05/18/09	TRAVELER RAIL MODIFICATIONS	MN	GB	2450
2	07/20/07	RAIL CHANGE & MISCELLANEOUS DETAILS	GB	NV	24
1	08/04/06	TRAVELER RAILS	GB	NV	24

REVISIONS

ALL DIMENSIONS ARE IN MILLIMETERS UNLESS OTHERWISE SHOWN

R. Vallzadeh/V. Toan/Y.L./W.L./F.C.
DESIGN OVERSIGHT
SIGN OFF DATE 05/18/09

Rev. Date: 5-18-98

	BY	CHECKED
DESIGN	J. Otter	G. Baker
DETAILS	J. Otter	M. Roberts
QUANTITIES	J. Otter	M. Roberts

PREPARED FOR THE STATE OF CALIFORNIA DEPARTMENT OF TRANSPORTATION

R. Manzanarez
PROJECT ENGINEER

CU 04
EA 0120F1

BRIDGE NO. 34-0006L/R
KILOMETER POST 13.2/13.9

DISREGARD PRINTS BEARING EARLIER REVISION DATES 04/18/02 07/20/02 12/19/02

ORIGINAL SCALE IN MILLIMETERS FOR REDUCED PLANS 0 10 20 30 40 50 60 70 80 90 100

SAN FRANCISCO OAKLAND BAY BRIDGE
EAST SPAN SEISMIC SAFETY PROJECT
SELF-ANCHORED SUSPENSION BRIDGE
(SUPERSTRUCTURE & TOWER)

TRAVELER RAIL DETAILS NO. 10

SHEET 712R3 OF

FILE -> I:\bb\04-012001\sas\contract plans and cco\cco\cco#2450\2-revision 05-18-09\dgn\aktrvl19b.dgn

100 % PS&E DATE PLOTTED => 19 MAY 2009 TIME PLOTTED => 16:46:52 USERNAME => dwinrow

DIST.	COUNTY	ROUTE	KILOMETER POST TOTAL PROJECT	SHEET NO.	TOTAL SHEETS
04	SF	80	13.2/13.9	1130R4	1204

George Baker
REGISTERED ENGINEER - CIVIL
12-6-04
PLANS APPROVAL DATE

REGISTERED PROFESSIONAL ENGINEER George S. Baker No. C 57112 Exp. 12/31/05 CIVIL STATE OF CALIFORNIA

The State of California or its officers or agents shall not be responsible for the accuracy or completeness of electronic copies of this plan sheet.

T.Y. LIN / MOFFATT & NICHOL
825 BATTERY STREET
SAN FRANCISCO, CA 94111

Caltrans now has a web site! To get to the web site, go to: http://www.dot.ca.gov

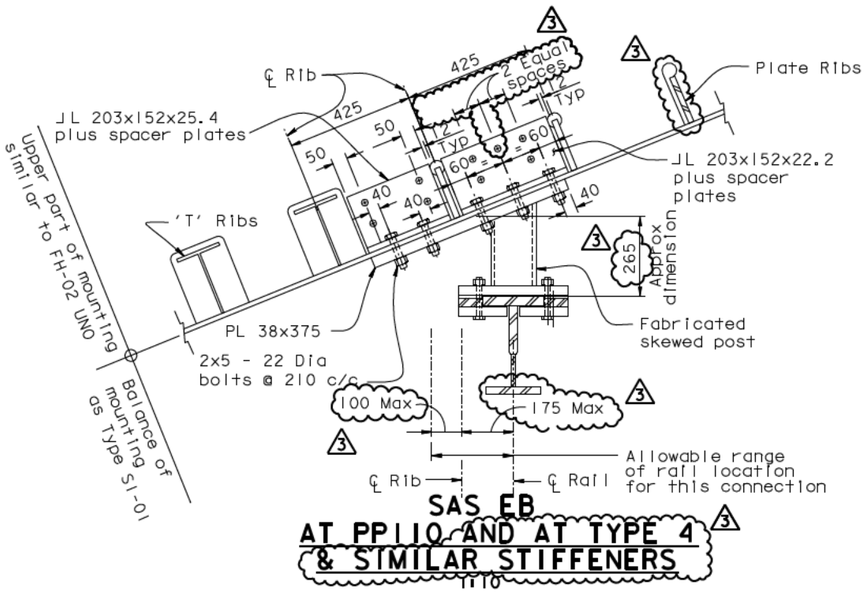

SAS EB
AT PP110 AND AT TYPE 4 & SIMILAR STIFFENERS
1:10

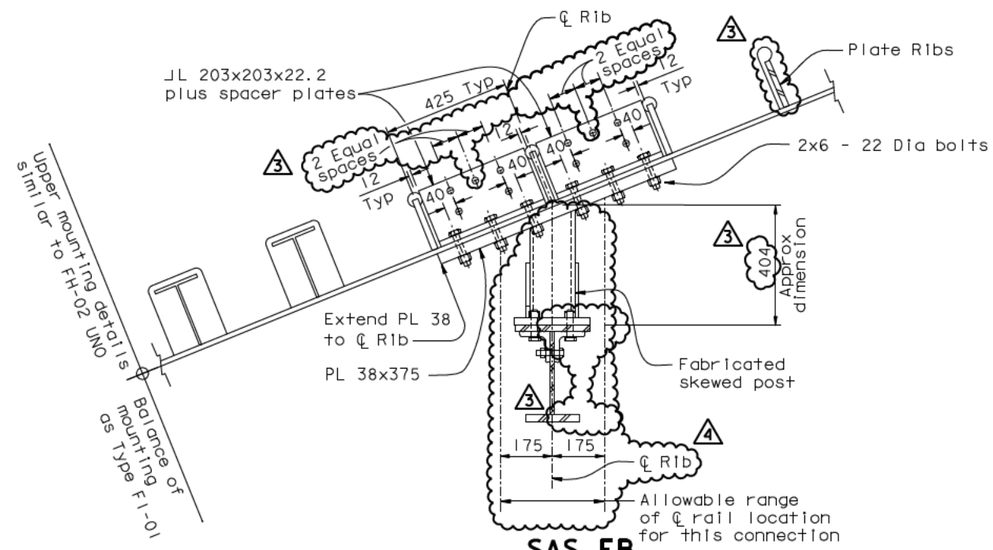

SAS EB
AT PP111 AND AT TYPE 4 & SIMILAR STIFFENERS
1:10

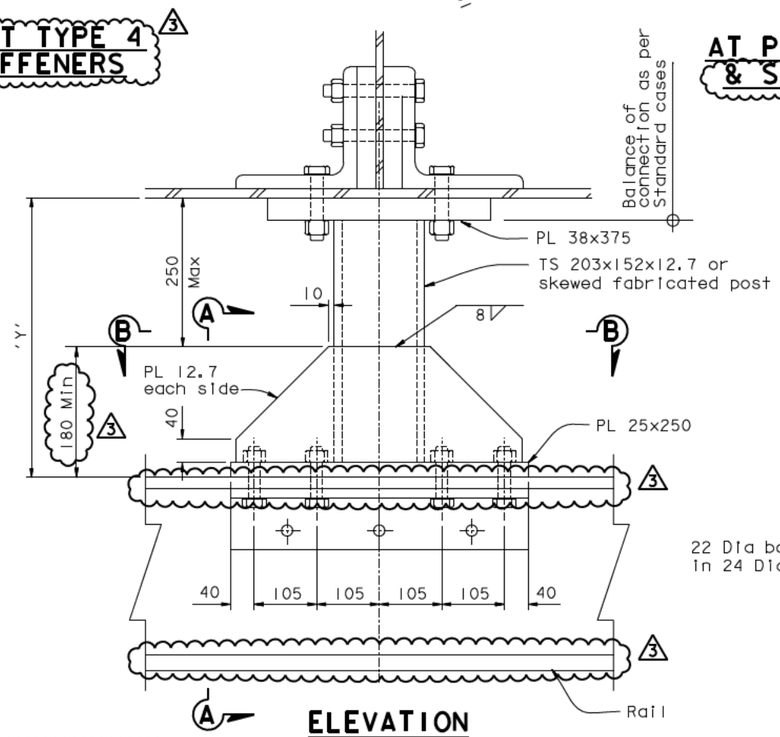

ELEVATION

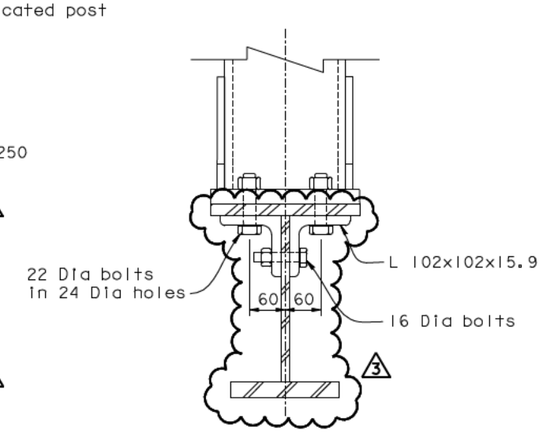

SECTION A-A

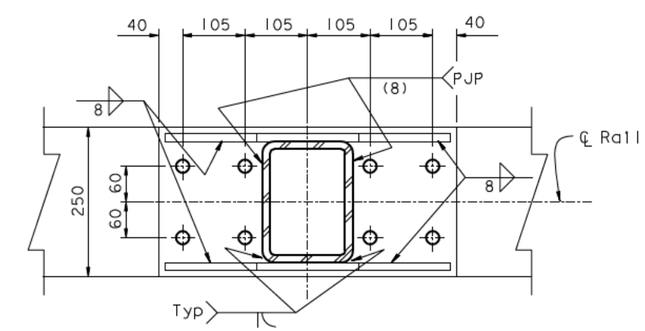

SECTION B-B

NOTES:

1. For Mounting Type S1-01, see "Traveler Rail Details No.6" sheet.
2. For Mounting Type F1-01, see "Traveler Rail Details No.3" sheet.
3. For Mounting Type FH-01, see "Traveler Rail Details No.4" sheet.
4. For Mounting Type FH-02, see "Traveler Rail Details No.5" sheet.
5. For General Notes relating to these mountings, see "Traveler Rail Details No.2" sheet.

MOUNTING MODIFICATION FL
(fixed connection modification for when 'Y' exceeds standard limits)

1:5

For Details not shown, see Mounting Type F1-01.

REGISTERED PROFESSIONAL ENGINEER Marwan N. Nader No. C 054426 Exp. 12/31/11 CIVIL STATE OF CALIFORNIA

FOR REVISIONS ONLY

3 REVISION 3 SUPERSEDES REVISIONS 1 & 2

CONTRACT CHANGE ORDER NO. ____
SHEET ___ OF ___

REQUESTS FOR INFORMATION NOT ADDRESSED IN THIS CCO REMAIN IN FORCE

MARK	DATE	DESCRIPTIONS	BY	CH'D	CCO#
4	03/05/10	TRAVELER RAIL MODIFICATIONS	MN	GB	2450
3	06/05/09	TRAVELER RAIL MODIFICATIONS	MN	GB	2450
2	07/20/07	RAIL CHANGE & MISCELLANEOUS DETAILS	GB	NV	24
1	08/04/06	TRAVELER RAILS	GB	NV	24

REVISIONS

R. Vallzadeh/V. Toan/Y.L./W.L./F.C.
DESIGN OVERSIGHT
SIGN OFF DATE 03/09/10

Rev. Date: 5-18-98

	BY	CHECKED
DESIGN	J. Otter	G. Baker
DETAILS	J. Otter	M. Roberts
QUANTITIES	J. Otter	M. Roberts

PREPARED FOR THE STATE OF CALIFORNIA DEPARTMENT OF TRANSPORTATION

R. Manzanarez
PROJECT ENGINEER

ALL DIMENSIONS ARE IN MILLIMETERS UNLESS OTHERWISE SHOWN

BRIDGE NO. 34-0006L/R
KILOMETER POST 13.2/13.9

SAN FRANCISCO OAKLAND BAY BRIDGE
EAST SPAN SEISMIC SAFETY PROJECT
SELF-ANCHORED SUSPENSION BRIDGE (SUPERSTRUCTURE & TOWER)

TRAVELER RAIL DETAILS NO. 11

ORIGINAL SCALE IN MILLIMETERS FOR REDUCED PLANS 0 10 20 30 40 50 60 70 80 90 100

CU 04
EA 0120F1

DISREGARD PRINTS BEARING EARLIER REVISION DATES

REVISION DATES (PRELIMINARY STAGE ONLY) 04/18/02 07/09/02 12/19/02

SHEET 713R4 OF

FILE -> I:\bb\04-012001\sas\contract plans and cco\cco\cco#24s0\7-revision 03-05-10\dgn\aktrv119c.dgn

100 % PS&E

USERNAME => grivera DATE PLOTTED => 05 MAR 2010 TIME PLOTTED => 07:50:20

DIST.	COUNTY	ROUTE	KILOMETER POST TOTAL PROJECT	SHEET NO.	TOTAL SHEETS
04	SF	80	13.2/13.9	1131R3	1204

Caltrans Metric

George Baker
REGISTERED ENGINEER - CIVIL
12-6-04
PLANS APPROVAL DATE

REGISTERED PROFESSIONAL ENGINEER George S. Baker No. C 57112 Exp. 12/31/05 CIVIL STATE OF CALIFORNIA

The State of California or its officers or agents shall not be responsible for the accuracy or completeness of electronic copies of this plan sheet.

T.Y. LIN / MOFFATT & NICHOL
825 BATTERY STREET
SAN FRANCISCO, CA 94111

Caltrans now has a web site! To get to the web site, go to: http://www.dot.ca.gov

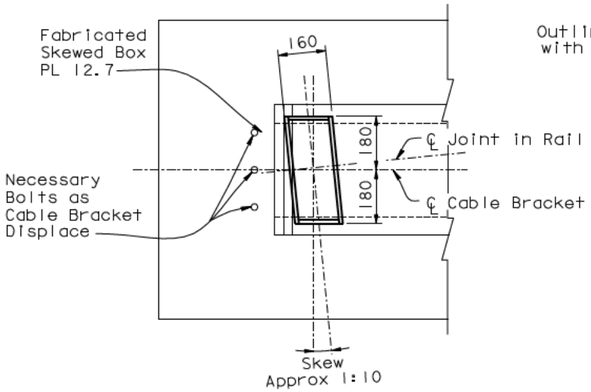

SECTION A-A
1:10

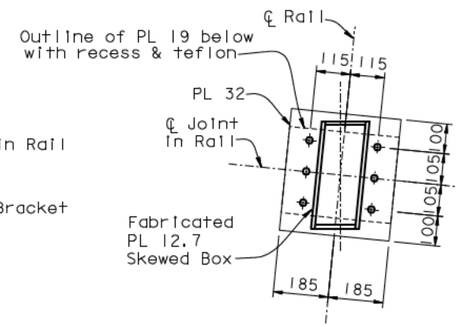

SECTION B-B
1:10

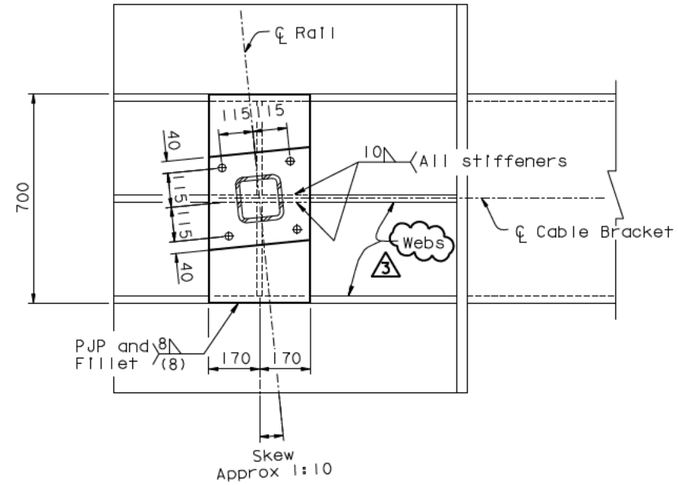

SECTION C-C
1:10

NOTES:

1. For Mounting Type S1-01, see "Traveler Rail Details No.6" sheet.
2. For Mounting Type F1-01, see "Traveler Rail Details No.3" sheet.

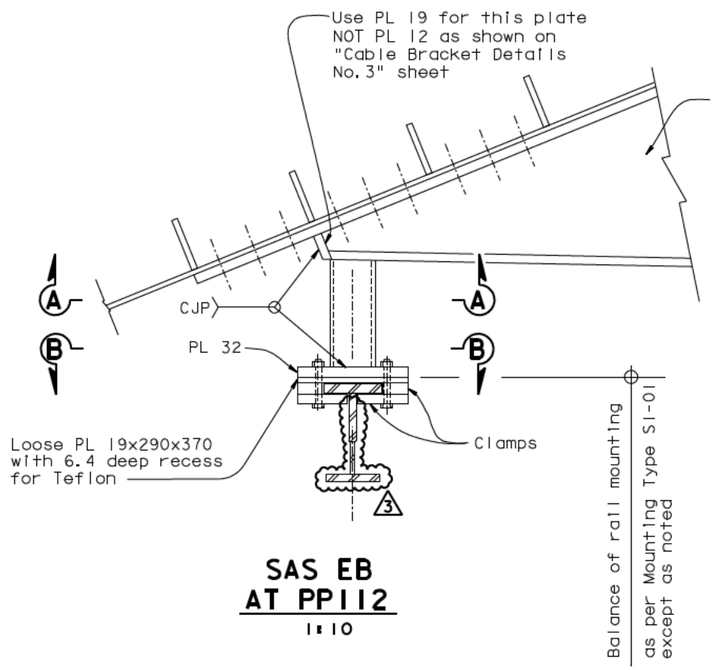

SAS EB AT PP112
1:10

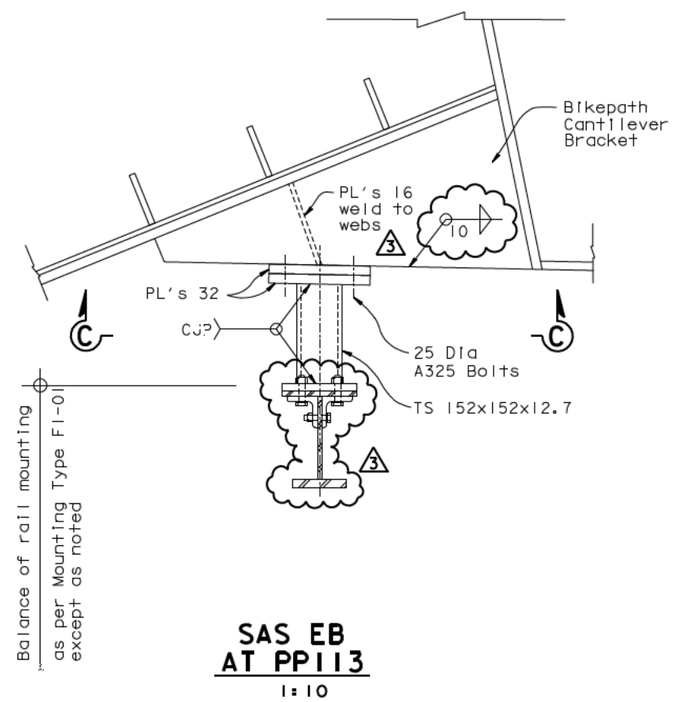

SAS EB AT PP113
1:10

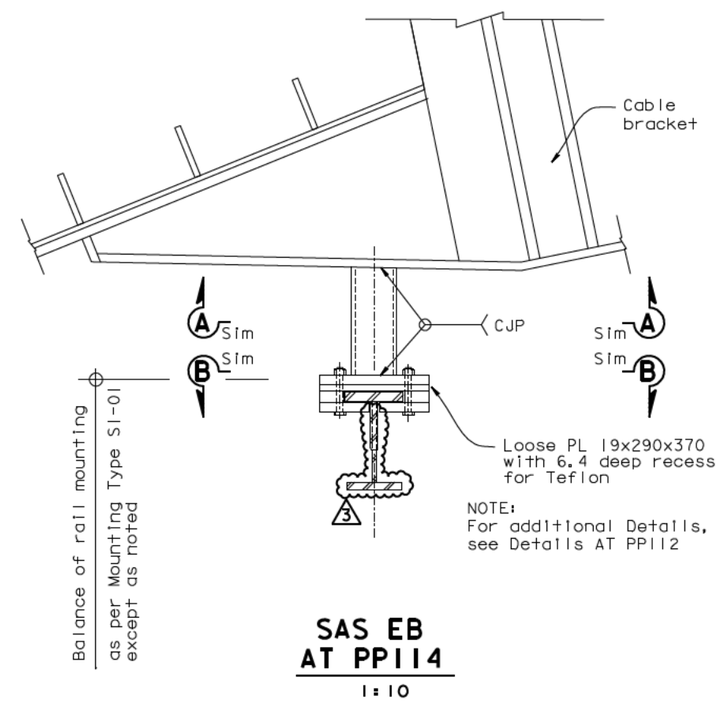

SAS EB AT PP114
1:10

PROFESSIONAL ENGINEER Mariam N. Nader No. C 054426 Exp. 12/31/09 CIVIL STATE OF CALIFORNIA

FOR REVISIONS ONLY

3 REVISION 3 SUPERSEDES REVISIONS 1 & 2

CONTRACT CHANGE ORDER NO. ____
SHEET ___ OF ___

REQUESTS FOR INFORMATION NOT ADDRESSED IN THIS CCO REMAIN IN FORCE

MARK	DATE	DESCRIPTIONS	BY	CH'D	CCO#
3	05/18/09	TRAVELER RAIL MODIFICATIONS	MN	GB	2450
2	07/20/07	RAIL CHANGE & MISCELLANEOUS DETAILS	GB	NV	24
1	08/04/06	TRAVELER RAILS	GB	NV	24

REVISIONS

SPECIAL SUPPORT DETAILS

ALL DIMENSIONS ARE IN MILLIMETERS UNLESS OTHERWISE SHOWN

R. Vallizadeh/V. Toan/Y.L./W.L./F.C.
DESIGN OVERSIGHT
SIGN OFF DATE 05/18/09

	BY	CHECKED
DESIGN	J. Otter	G. Baker
DETAILS	J. Otter	M. Roberts
QUANTITIES	J. Otter	M. Roberts

PREPARED FOR THE STATE OF CALIFORNIA DEPARTMENT OF TRANSPORTATION

R. Manzanarez
PROJECT ENGINEER

BRIDGE NO. 34-0006L/R
KILOMETER POST 13.2/13.9

SAN FRANCISCO OAKLAND BAY BRIDGE
EAST SPAN SEISMIC SAFETY PROJECT
SELF-ANCHORED SUSPENSION BRIDGE
(SUPERSTRUCTURE & TOWER)

TRAVELER RAIL DETAILS NO. 12

Rev. Date: 5-18-98

ORIGINAL SCALE IN MILLIMETERS FOR REDUCED PLANS 0 10 20 30 40 50 60 70 80 90 100

CU 04
EA 0120F1

DISREGARD PRINTS BEARING EARLIER REVISION DATES

REVISION DATES (PRELIMINARY STAGE ONLY) 04/15/02 07/01/02 12/19/02

SHEET 714R3 OF

FILE -> I:\bb\04-012001\sas\contract plans and cco\cco\cco#24s0\2-revision 05-18-09\dgn\aktrv119d.dgn

100 % PS&E

USERNAME => dwinrow DATE PLOTTED => 19 MAY 2009 TIME PLOTTED => 16:48:42

DIST.	COUNTY	ROUTE	KILOMETER POST TOTAL PROJECT	SHEET NO.	TOTAL SHEETS
04	SF	80	13.2/13.9	1132R3	1204

Caltrans Metric

George Baker
REGISTERED ENGINEER - CIVIL
12-6-04
PLANS APPROVAL DATE

REGISTERED PROFESSIONAL ENGINEER George S. Baker No. C 57112 Exp. 12/31/05 CIVIL STATE OF CALIFORNIA

The State of California or its officers or agents shall not be responsible for the accuracy or completeness of electronic copies of this plan sheet.

T.Y. LIN / MOFFATT & NICHOL
825 BATTERY STREET
SAN FRANCISCO, CA 94111

Caltrans now has a web site! To get to the web site, go to: http://www.dot.ca.gov

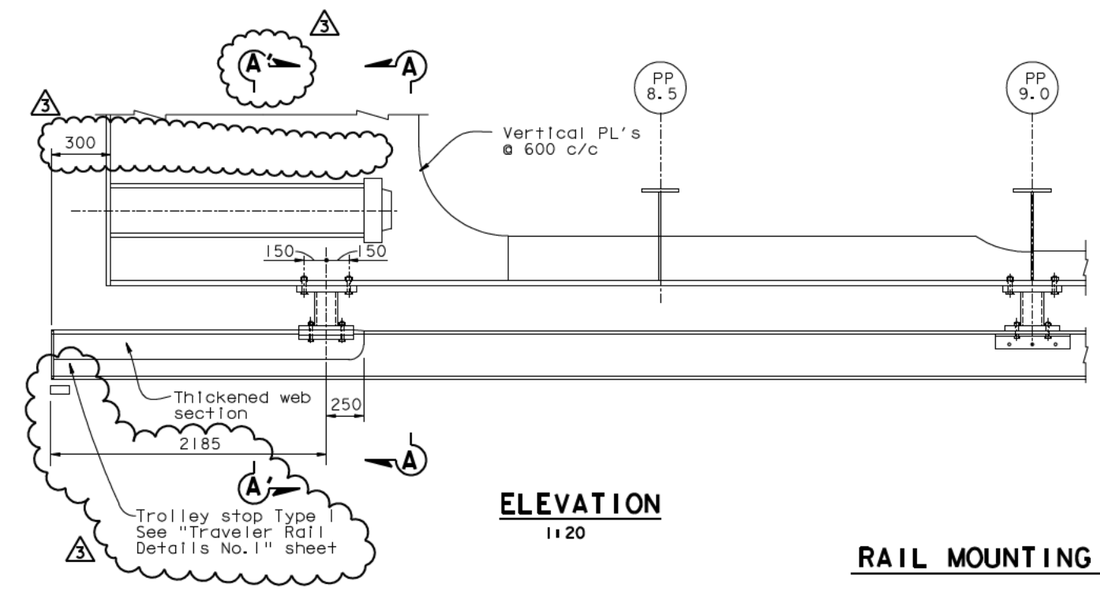

ELEVATION
1:20

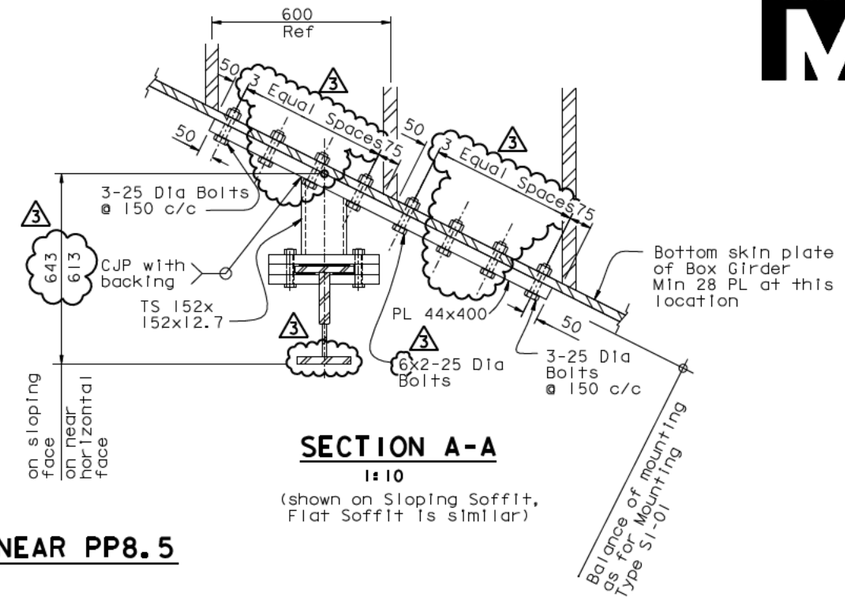

SECTION A-A
1:10
(shown on Sloping Soffit, Flat Soffit is similar)

RAIL MOUNTING NEAR PP8.5

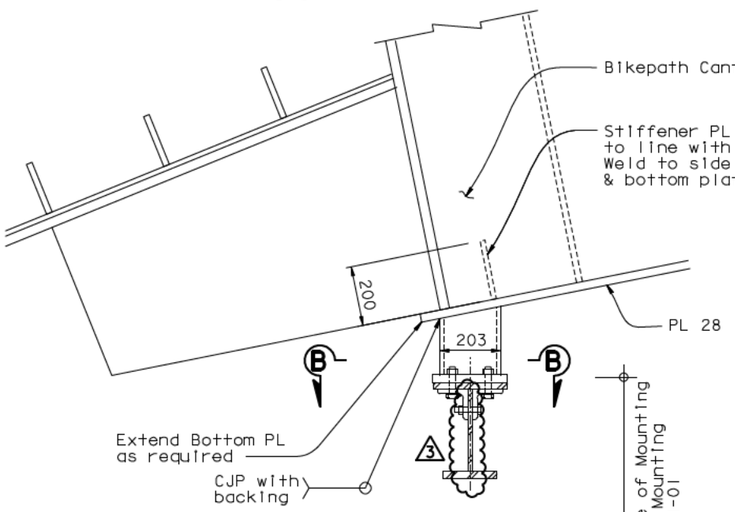

SAS EB AT PP115

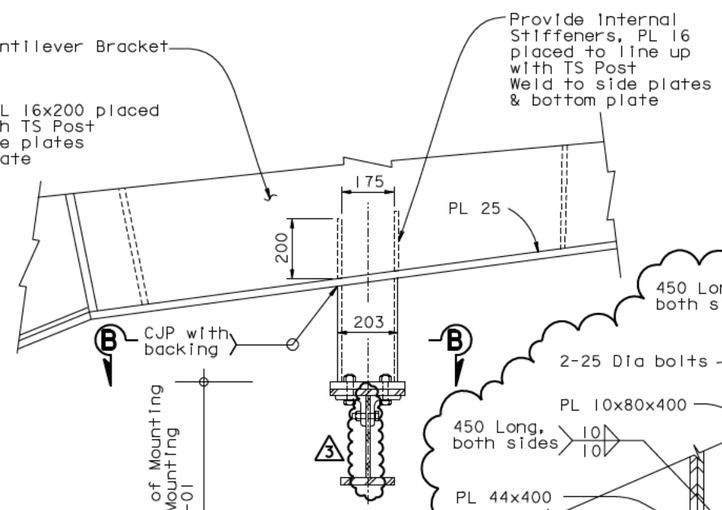

SAS EB AT PP117
1:10

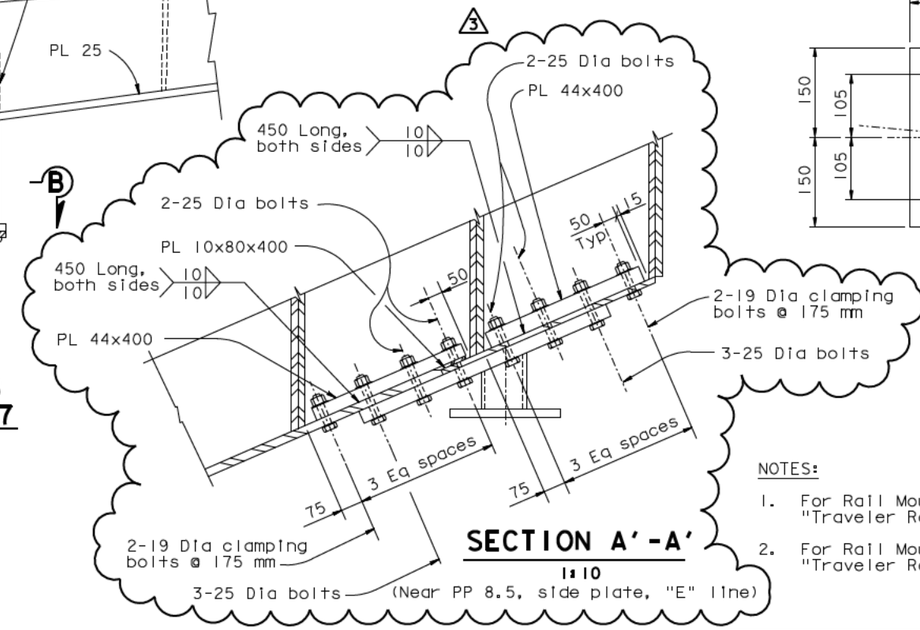

SECTION A'-A'
1:10

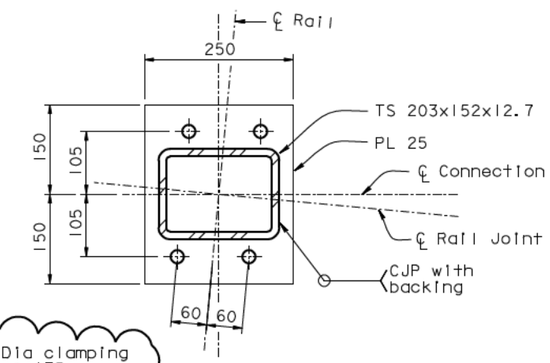

SECTION B-B
1:5

NOTES:

1. For Rail Mounting Type F1-01, see "Traveler Rail Details No.3" sheet.
2. For Rail Mounting Type S1-01, see "Traveler Rail Details No.6" sheet.

ALL DIMENSIONS ARE IN MILLIMETERS UNLESS OTHERWISE SHOWN

REGISTERED PROFESSIONAL ENGINEER Mark N. Nader No. C 054426 Exp. 12/31/09 CIVIL STATE OF CALIFORNIA

FOR REVISIONS ONLY

REVISION 3 SUPERSEDES REVISIONS 1 & 2

CONTRACT CHANGE ORDER NO. ____
SHEET ___ OF ___

REQUESTS FOR INFORMATION NOT ADDRESSED IN THIS CCO REMAIN IN FORCE

MARK	DATE	DESCRIPTIONS	BY	CH'D	CCO#
3	05/18/09	TRAVELER RAIL MODIFICATIONS	MN	GB	2450
2	07/20/07	RAIL CHANGE & MISCELLANEOUS DETAILS	GB	NV	24
1	08/04/06	TRAVELER RAILS	GB	NV	24

REVISIONS

R. Vallizadeh/V. Toan/Y.L./W.L./F.C.
DESIGN OVERSIGHT
Roya Vallizadeh / Vong Toan / Y. Liu
SIGN OFF DATE 05/18/09

Rev. Date: 5-18-98

DESIGN	BY J. Otter	CHECKED G. Baker	
DETAILS	BY J. Otter	CHECKED M. Roberts	
QUANTITIES	BY J. Otter	CHECKED M. Roberts	

PREPARED FOR THE STATE OF CALIFORNIA DEPARTMENT OF TRANSPORTATION

R. Manzanarez
PROJECT ENGINEER

BRIDGE NO. 34-0006L/R
KILOMETER POST 13.2/13.9

SAN FRANCISCO OAKLAND BAY BRIDGE
EAST SPAN SEISMIC SAFETY PROJECT
SELF-ANCHORED SUSPENSION BRIDGE (SUPERSTRUCTURE & TOWER)

TRAVELER RAIL DETAILS NO. 13

ORIGINAL SCALE IN MILLIMETERS FOR REDUCED PLANS 0 10 20 30 40 50 60 70 80 90 100

CU 04
EA 0120F1

DISREGARD PRINTS BEARING EARLIER REVISION DATES

REVISION DATES (PRELIMINARY STAGE ONLY) 04/15/02 07/09/02 12/19/02

SHEET 715R3 OF

FILE -> I:\bb\04-012001\sas\contract plans and cco\cco\cco#2450\2-revision 05-18-09\dgn\aktrvl19e.dgn

100 % PS&E

USERNAME => dwinrow DATE PLOTTED => 19 MAY 2009 TIME PLOTTED => 16:51:17

DIST.	COUNTY	ROUTE	KILOMETER POST TOTAL PROJECT	SHEET NO.	TOTAL SHEETS
04	SF	80	13.2/13.9	1133R4	1204

Caltrans Metric

George Baker
REGISTERED ENGINEER - CIVIL
12-6-04
PLANS APPROVAL DATE

REGISTERED PROFESSIONAL ENGINEER George S. Baker No. C 57112 Exp. 12/31/05 CIVIL STATE OF CALIFORNIA

The State of California or its officers or agents shall not be responsible for the accuracy or completeness of electronic copies of this plan sheet.

T.Y. LIN / MOFFATT & NICHOL
825 BATTERY STREET
SAN FRANCISCO, CA 94111

Caltrans now has a web site! To get to the web site, go to: http://www.dot.ca.gov

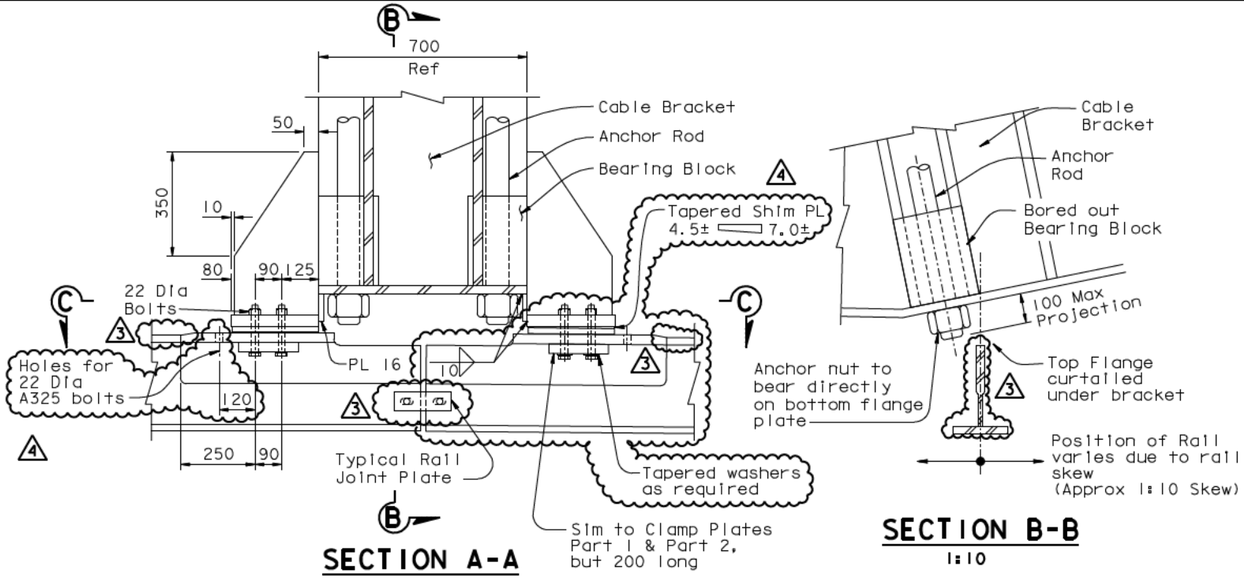

SECTION A-A
1:10

SECTION B-B
1:10

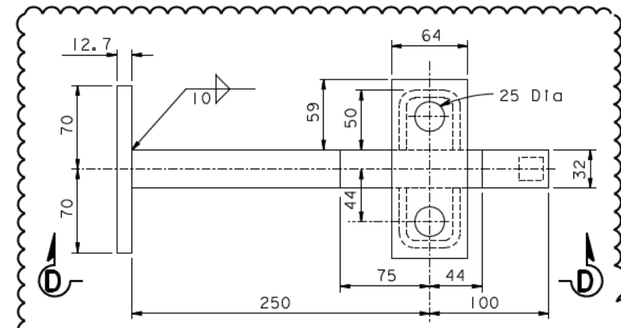

DETAIL A
1:2.5

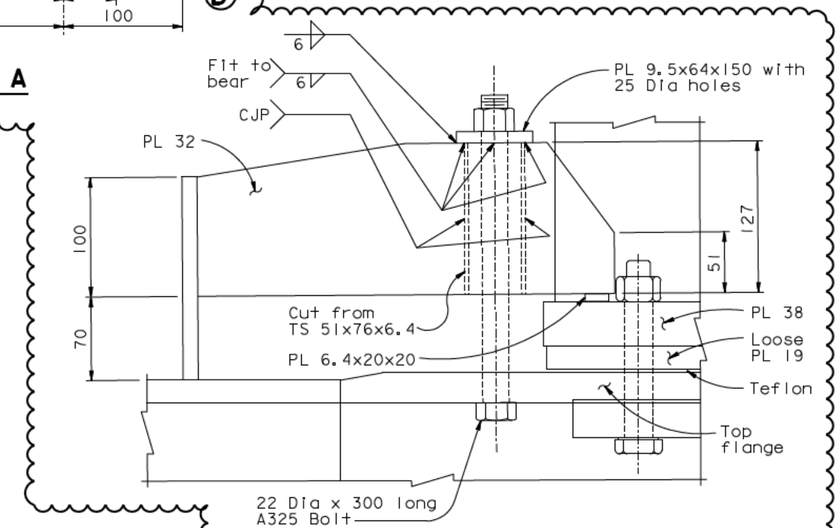

VIEW D-D
1:2.5

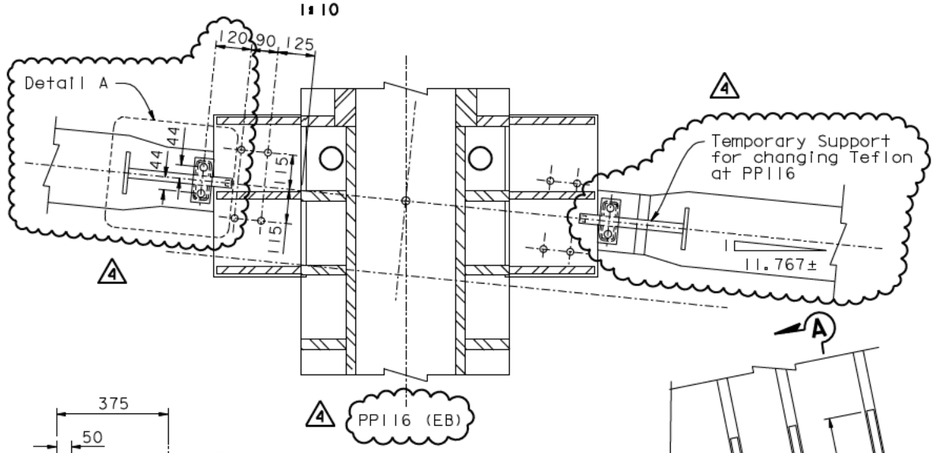

SECTION C-C
1:10

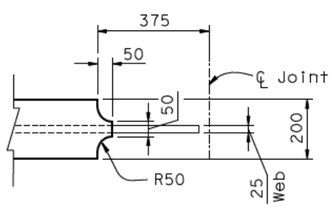

TOP FLANGE CURTAILMENT DETAIL
1:10

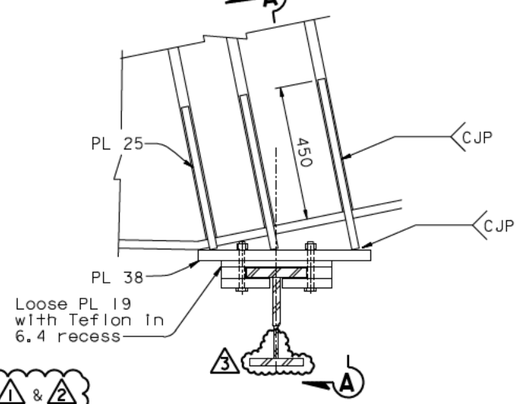

SAS EB AT PP116
1:10

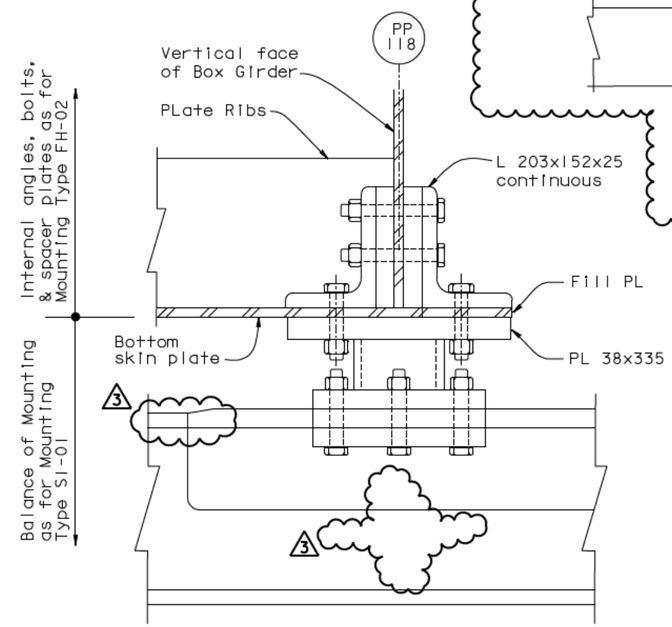

SAS EB AT PP118
1:5

NOTES:

1. For Rail Mounting Type FH-02, see "Traveler Rail Details No.5" sheet.
2. For Rail Mounting Type S1-01, see "Traveler Rail Details No.6" sheet.
3. For Cable Bracket Modification, see "Cable Bracket Details" sheets.
4. For clamp plate details, see "Traveler Rail Details No.6" sheet.
5. For rail joint plate detail, see "Traveler Rail Details No.2" sheet.

REGISTERED PROFESSIONAL ENGINEER Marwan N. Nader No. C 054426 Exp. 12/31/11 CIVIL STATE OF CALIFORNIA

FOR REVISIONS ONLY

3 REVISION 3 SUPERSEDES REVISIONS 1 & 2

CONTRACT CHANGE ORDER NO. ____
SHEET ___ OF ___

REQUESTS FOR INFORMATION NOT ADDRESSED IN THIS CCO REMAIN IN FORCE

MARK	DATE	DESCRIPTIONS	BY	CH'D	CCO#
4	03/05/10	TRAVELER RAIL MODIFICATIONS	MN	GB	2450
3	05/18/09	TRAVELER RAIL MODIFICATIONS	MN	GB	2450
2	07/20/07	RAIL CHANGE & MISCELLANEOUS DETAILS	BP	NV	24
1	08/04/06	TRAVELER RAILS	GB	NV	24

REVISIONS

SPECIAL SUPPORT DETAILS

ALL DIMENSIONS ARE IN MILLIMETERS UNLESS OTHERWISE SHOWN

R. Valizadeh/V. Toan/Y.L./W.L./F.C.
DESIGN OVERSIGHT
SIGN OFF DATE 03/09/10

DESIGN	BY J. Otter	CHECKED G. Baker	
DETAILS	BY J. Otter	CHECKED M. Roberts	
QUANTITIES	BY J. Otter	CHECKED M. Roberts	

PREPARED FOR THE STATE OF CALIFORNIA DEPARTMENT OF TRANSPORTATION

R. Manzanarez
PROJECT ENGINEER

BRIDGE NO. 34-0006L/R
KILOMETER POST 13.2/13.9

SAN FRANCISCO OAKLAND BAY BRIDGE
EAST SPAN SEISMIC SAFETY PROJECT
SELF-ANCHORED SUSPENSION BRIDGE (SUPERSTRUCTURE & TOWER)

TRAVELER RAIL DETAILS NO. 14

Rev. Date: 5-18-98

ORIGINAL SCALE IN MILLIMETERS FOR REDUCED PLANS 0 10 20 30 40 50 60 70 80 90 100

CU 04
EA 0120F1

DISREGARD PRINTS BEARING EARLIER REVISION DATES 04/19/02 07/20/02 12/19/02

REVISION DATES (PRELIMINARY STAGE ONLY)

SHEET 716R4 OF

FILE -> I:\bb\04-0120F1\sas\contract plans and cco\cco\cco#24S0\7-revision 03-05-10\dgn\aktrvl19f.dgn

100% PS&E

USERNAME => arivera DATE PLOTTED => 05 MAR 2010 TIME PLOTTED => 07:52:58

DIST.	COUNTY	ROUTE	KILOMETER POST TOTAL PROJECT	SHEET NO.	TOTAL SHEETS
04	SF	80	13.2/13.9	1133SIR3	1204

Caltrans Metric

REGISTERED ENGINEER - MECHANICAL

07-20-07

PLANS APPROVAL DATE

REGISTERED PROFESSIONAL ENGINEER Marwan N. Nader No. C 054426 Exp. 12/31/11 CIVIL STATE OF CALIFORNIA

The State of California or its officers or agents shall not be responsible for the accuracy or completeness of electronic copies of this plan sheet.

T.Y. LIN / MOFFATT & NICHOL
825 BATTERY STREET
SAN FRANCISCO, CA 94111

Caltrans now has a web site! To get to the web site, go to: http://www.dot.ca.gov

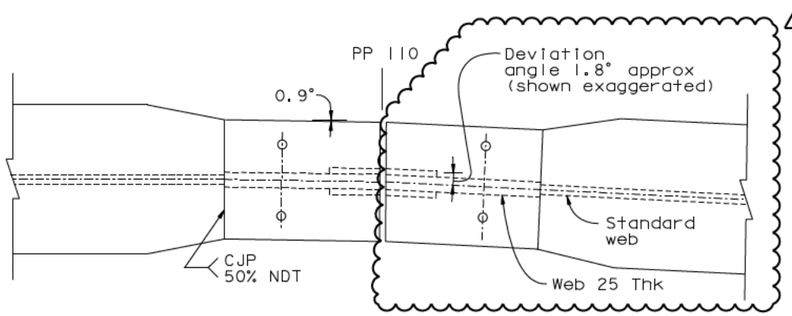

SECTION C-C

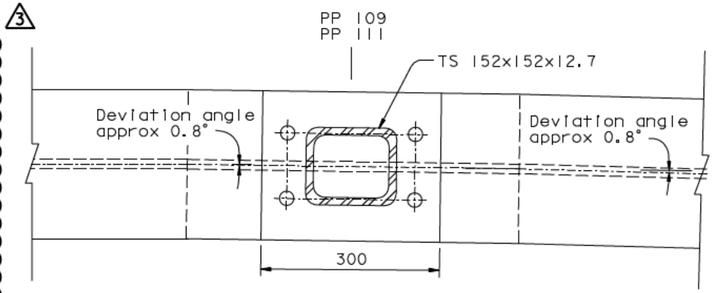

SECTION A-A

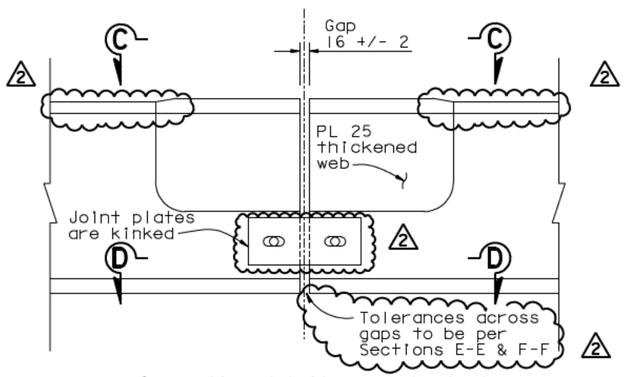

Connection details are standard (not shown for clarity)

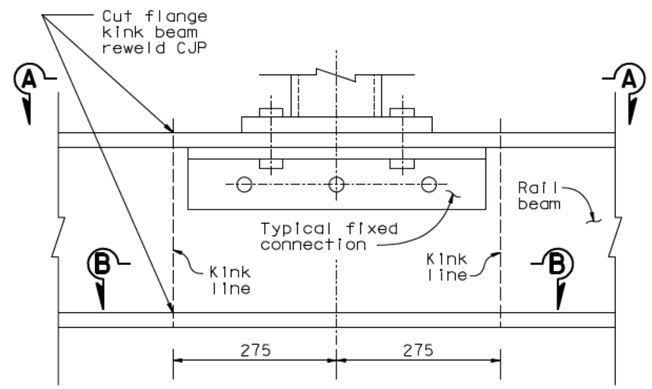

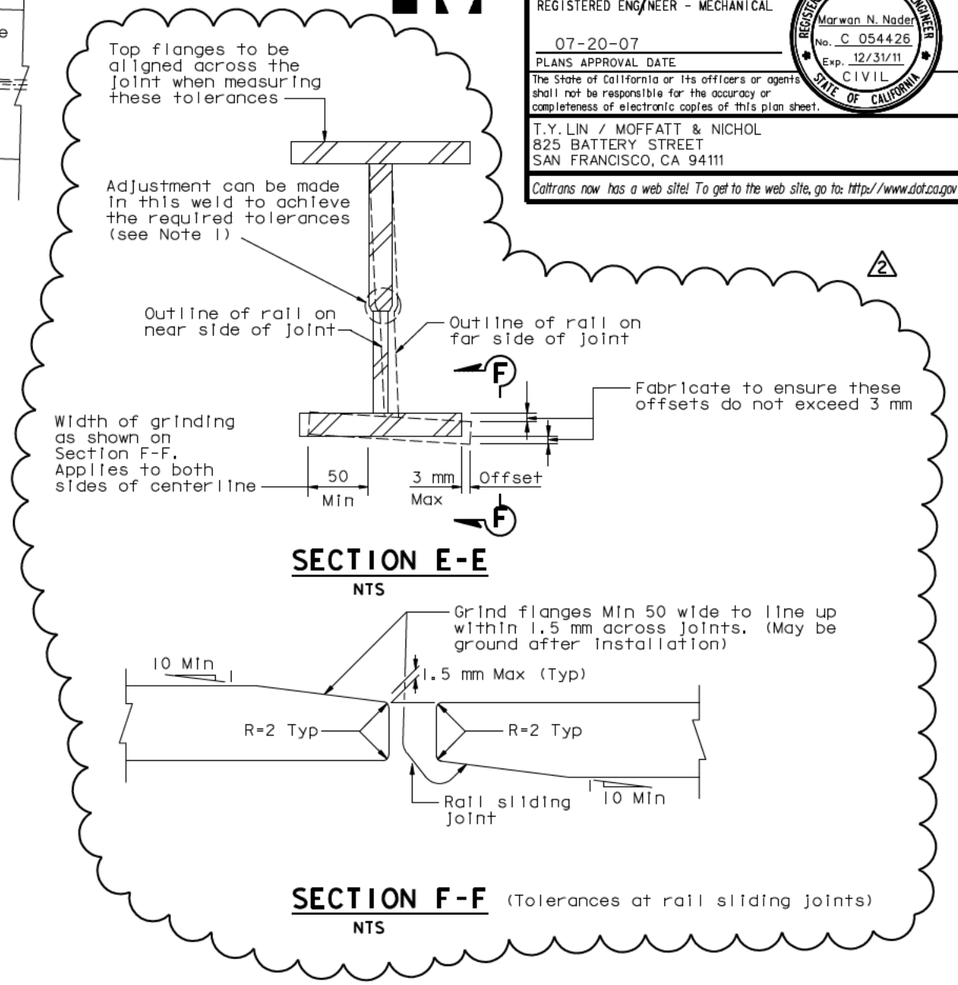

SECTION E-E
NTS

SECTION F-F (Tolerances at rail sliding joints)
NTS

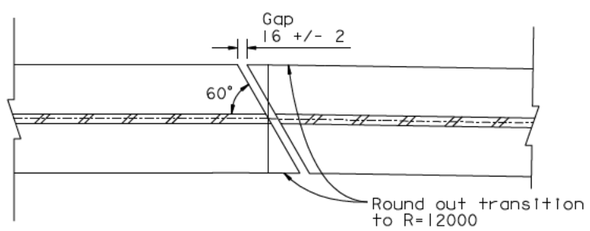

SECTION D-D

DETAIL AT PP 110

1:5

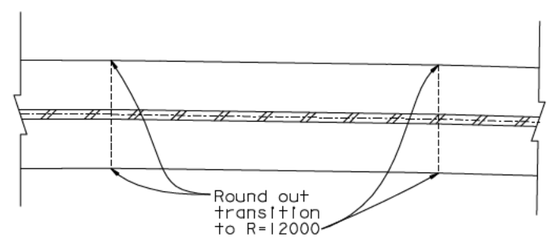

SECTION B-B

DETAIL AT PP 109 & 111

1:5

NOTES:

2. 1. Adjust within the welds to the Tee section in order to achieve the required tolerances at the rail joints. Match mark for installation if necessary to achieve the tolerances shown after installation.

SPECIAL RAIL DETAILS AT DEVIATION

2 REVISION 2 SUPERSEDES REVISION 0 & 1

CONTRACT CHANGE ORDER NO. ____
SHEET ____ OF ____

REQUESTS FOR INFORMATION NOT ADDRESSED IN THIS CCO REMAIN IN FORCE

MARK	DATE	DESCRIPTIONS	BY	CH'D	CCO#
3	03/05/10	TRAVELER RAIL MODIFICATIONS	GB	MN	2450
2	05/18/09	TRAVELER RAIL MODIFICATIONS	GB	MN	2450
1	07/20/07	RAIL CHANGE AND MISCELLANEOUS DETAILS	GB	NV	24
0	08/04/06	TRAVELER RAILS	GB	NV	24

REVISIONS

ALL DIMENSIONS ARE IN MILLIMETERS UNLESS OTHERWISE SHOWN

R. Valizadeh/V. Toan/Y.L./W.L./F.C.
DESIGN OVERSIGHT
SIGN OFF DATE 03/09/10

	BY	CHECKED
DESIGN	J. Otter	G. Baker
DETAILS	J. Otter	G. Baker
QUANTITIES	J. Otter	M. Roberts

PREPARED FOR THE STATE OF CALIFORNIA DEPARTMENT OF TRANSPORTATION

R. Manzanarez
PROJECT ENGINEER

BRIDGE NO. 34-0006L/R
KILOMETER POST 13.2/13.9

SAN FRANCISCO OAKLAND BAY BRIDGE
EAST SPAN SEISMIC SAFETY PROJECT
SELF-ANCHORED SUSPENSION BRIDGE (SUPERSTRUCTURE & TOWER)

TRAVELER RAIL DETAILS NO. 15

Rev. Date: 5-18-98

ORIGINAL SCALE IN MILLIMETERS FOR REDUCED PLANS 0 10 20 30 40 50 60 70 80 90 100

CU 04
EA 0120F1

DISREGARD PRINTS BEARING EARLIER REVISION DATES 07/20/07

REVISION DATES (PRELIMINARY STAGE ONLY)

SHEET 716SIR3 OF

FILE -> I:\bb\04-012001\sas\contract plans and cco\cco\cco#24s0\7-revision 03-05-10\dgn\aktrv124a.dgn

100 % PS&E

USERNAME => arivera DATE PLOTTED => 05 MAR 2010 TIME PLOTTED => 07:54:29

DIST.	COUNTY	ROUTE	KILOMETER POST TOTAL PROJECT	SHEET NO.	TOTAL SHEETS
04	SF	80	13.2/13.9	1153R3	1204

Caltrans Metric

REGISTERED ENGINEER - CIVIL

12-6-04
PLANS APPROVAL DATE

REGISTERED PROFESSIONAL ENGINEER Rafael Manzanarez No. C 36842 Exp. 6/30/10 CIVIL STATE OF CALIFORNIA

The State of California or its officers or agents shall not be responsible for the accuracy or completeness of electronic copies of this plan sheet.

T.Y. LIN / MOFFATT & NICHOL
825 BATTERY STREET
SAN FRANCISCO, CA 94111

Caltrans now has a web site! To get to the web site, go to: http://www.dot.ca.gov

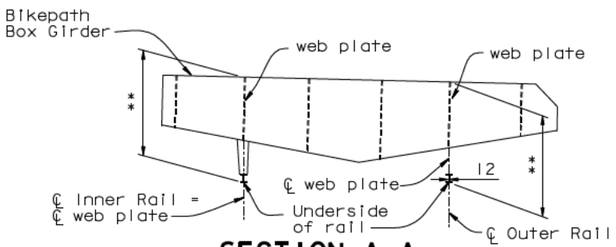

SECTION A-A
1:50

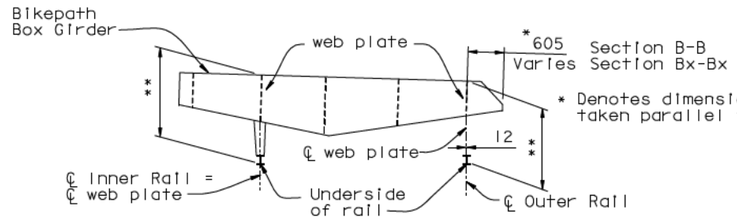

SECTION B-B, BX-BX
1:50

**For Vertical dimension to underside of rail, see "Section Along Outer Rail" on this sheet

NOTES:

1. Box girder web plates to be located as shown to support the traveler rails.
2. For Rail Types 1 and 2, see "E2/E3 Bikepath Traveler Rails-02" sheet.
3. For bikepath padeye detail, see "Girder Access Details No. 10" sheet.
4. (3) Contractor to field verify rail locations at end of Skyway and to adjust locations of rail on SAS if necessary to line up with Skyway rails.

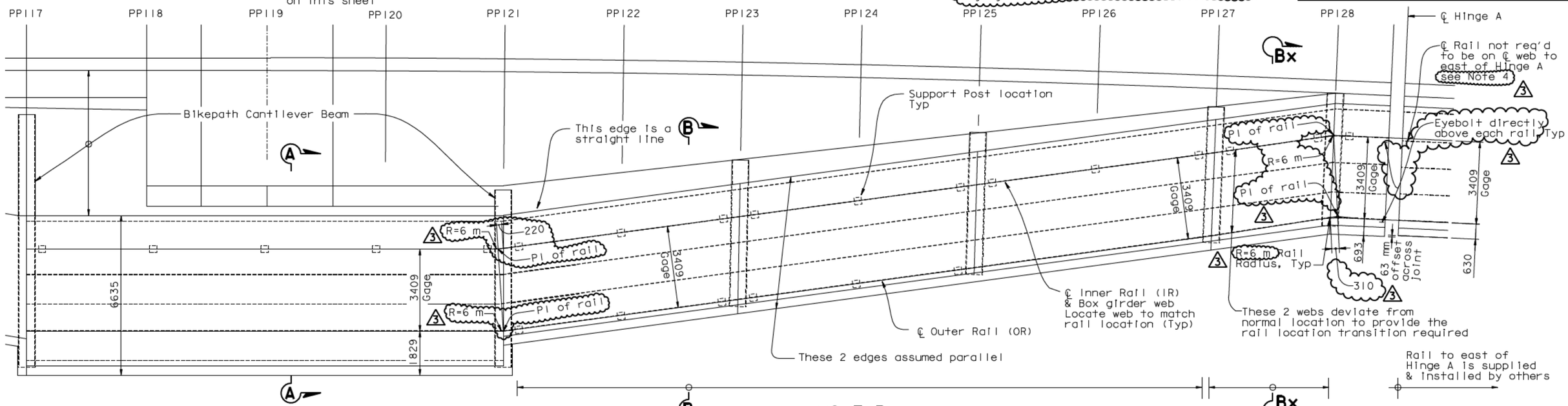

LAYOUT PLAN
1:80

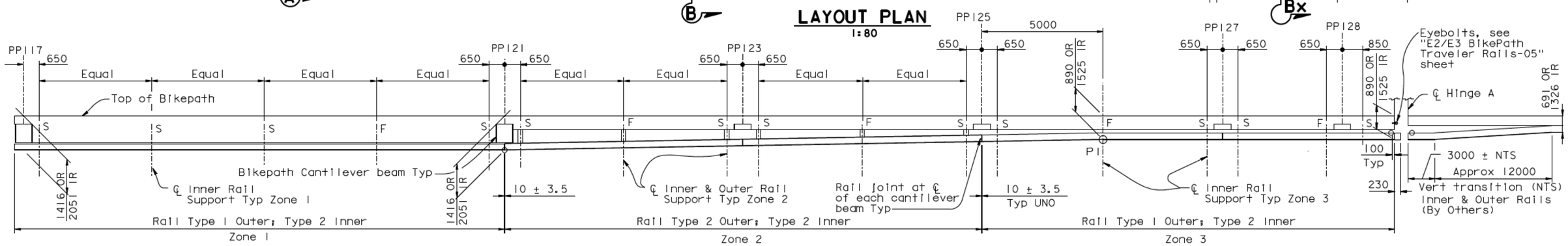

SECTION ALONG OUTER RAIL
1:80

OR Denotes Outer Rail
IR Denotes Inner Rail
F Denotes Fixed Connection
S Denotes Sliding Connection

(3) REVISION (3) SUPERSEDES REVISIONS (1) & (2)

CONTRACT CHANGE ORDER NO. ____
SHEET ___ OF ___

REQUESTS FOR INFORMATION NOT ADDRESSED IN THIS CCO REMAIN IN FORCE

MARK	DATE	DESCRIPTIONS	BY	CH'D	CCO#
3	06/05/09	TRAVELER RAIL MODIFICATIONS	RM	NV	2450
2	07/20/07	RAIL CHANGE & MISCELLANEOUS DETAILS	RM	NV	24
1	08/04/06	TRAVELER RAILS	RM	NV	24

REVISIONS

R. Vallzadeh/V. Toan/Y.L./W.L./F.C.
DESIGN OVERSIGHT
Roya Valizadeh / Vong Toan / Y. Liu
SIGN OFF DATE 06/09/09

Rev. Date: 5-18-98

	BY	CHECKED
DESIGN	J. Otter	R. Manzanarez
DETAILS	J. Otter	J. Leventini
QUANTITIES	J. Otter	J. Leventini

PREPARED FOR THE STATE OF CALIFORNIA DEPARTMENT OF TRANSPORTATION

R. Manzanarez
PROJECT ENGINEER

BRIDGE NO. 34-0006L/R
KILOMETER POST 13.2/13.9

ALL DIMENSIONS ARE IN MILLIMETERS UNLESS OTHERWISE SHOWN

ORIGINAL SCALE IN MILLIMETERS FOR REDUCED PLANS 0 10 20 30 40 50 60 70 80 90 100

CU 04
EA 0120F1

DISREGARD PRINTS BEARING EARLIER REVISION DATES

REVISION DATES (PRELIMINARY STAGE ONLY) 04/18/02 07/20/02 12/19/02

SHEET 736R3 OF

SAN FRANCISCO OAKLAND BAY BRIDGE
EAST SPAN SEISMIC SAFETY PROJECT
SELF-ANCHORED SUSPENSION BRIDGE
(SUPERSTRUCTURE & TOWER)

E2/E3 BIKEPATH TRAVELER RAILS-01

FILE -> I:\bb\04-012001\sas\contract plans and cco\cco\cco#24s0\3-update 06-05-09\dgn\aktrv134.dgn

100 % PS&E

USERNAME => dwinrow DATE PLOTTED => 10 JUN 2009 TIME PLOTTED => 15:56:56

DIST.	COUNTY	ROUTE	KILOMETER POST TOTAL PROJECT	SHEET NO.	TOTAL SHEETS
04	SF	80	13.2/13.9	1154R3	1204

Caltrans Metric

REGISTERED ENGINEER - CIVIL

12-6-04
PLANS APPROVAL DATE

Rafael Manzanarez No. C 36842 Exp. 6/30/10 CIVIL — REGISTERED PROFESSIONAL ENGINEER — STATE OF CALIFORNIA

The State of California or its officers or agents shall not be responsible for the accuracy or completeness of electronic copies of this plan sheet.

T.Y. LIN / MOFFATT & NICHOL
825 BATTERY STREET
SAN FRANCISCO, CA 94111

Caltrans now has a web site! To get to the web site, go to: http://www.dot.ca.gov

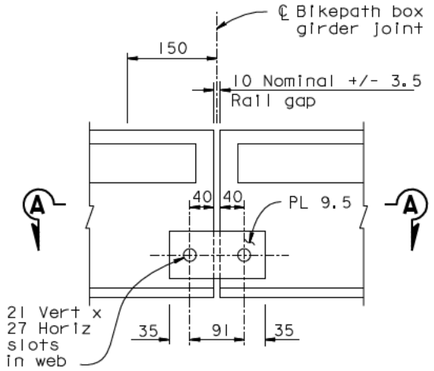

ELEVATION
Rail Type 1 on Skyway
(By Others)

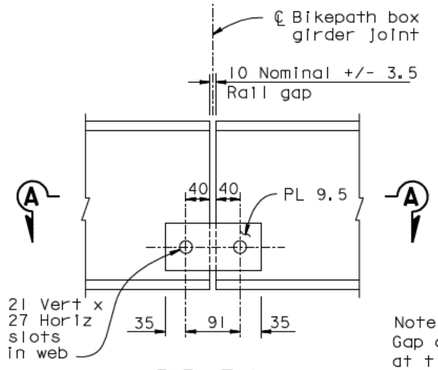

ELEVATION
Rail Type 2 on Skyway
(By Others)

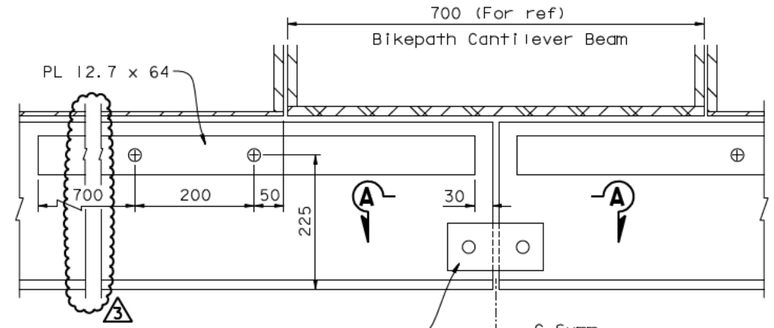

Note:
Gap dimension to be as shown at time of installation. Gap will vary +/- 3 mm per 8000 span due to flexure etc. of steel superstructure. Set gap as shown unless noted otherwise in rail layouts.

RAIL SPLICE
1:5

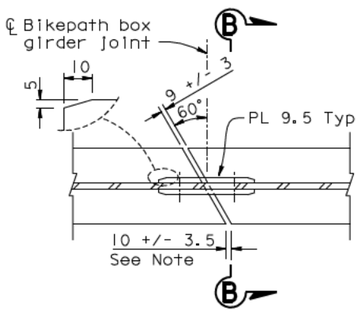

SECTION A-A
1:5

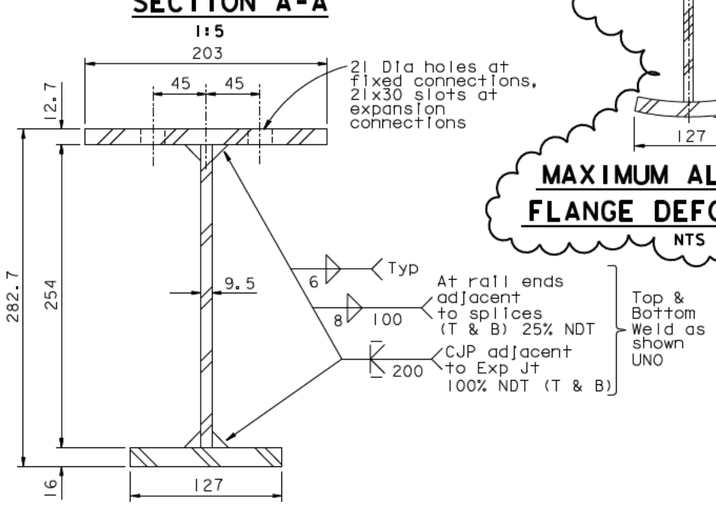

RAIL TYPE 2
1:2.5

19 Dia x 27 long (overall length) stainless steel flat socket head capscrews in countersunk or tapped holes. NC thread. Install with thread locking compound

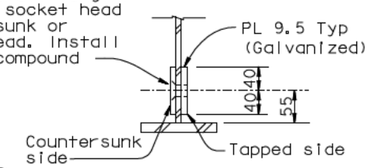

SECTION B-B
1:5

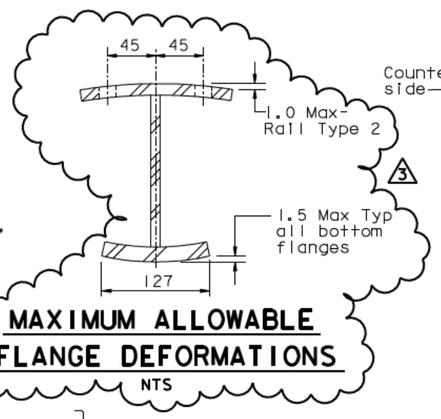

MAXIMUM ALLOWABLE FLANGE DEFORMATIONS
NTS

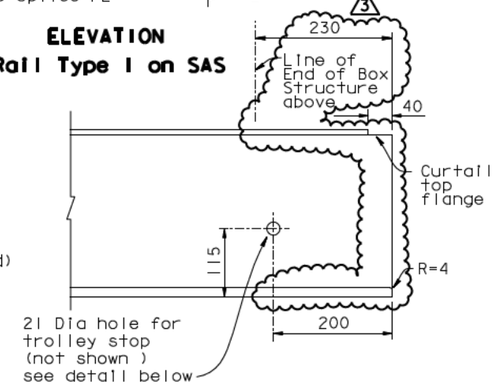

RAIL TYPE 2 AT HINGE A
1:5

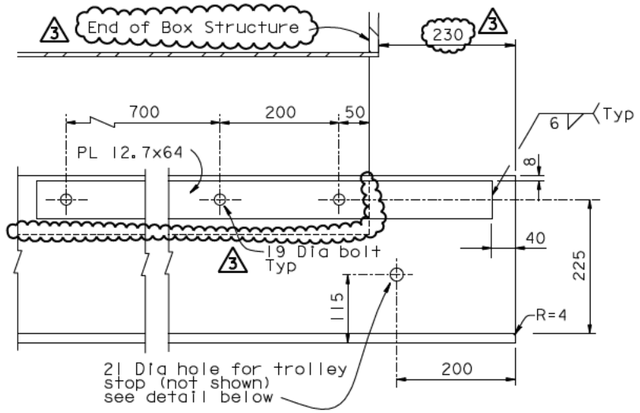

RAIL TYPE 1 AT HINGE A
1:5

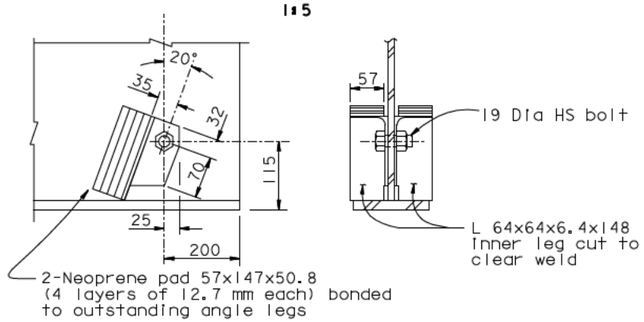

TROLLEY STOP DETAIL
1:5

Note: Install trolley stops at both sides of each expansion joint and at rail terminations

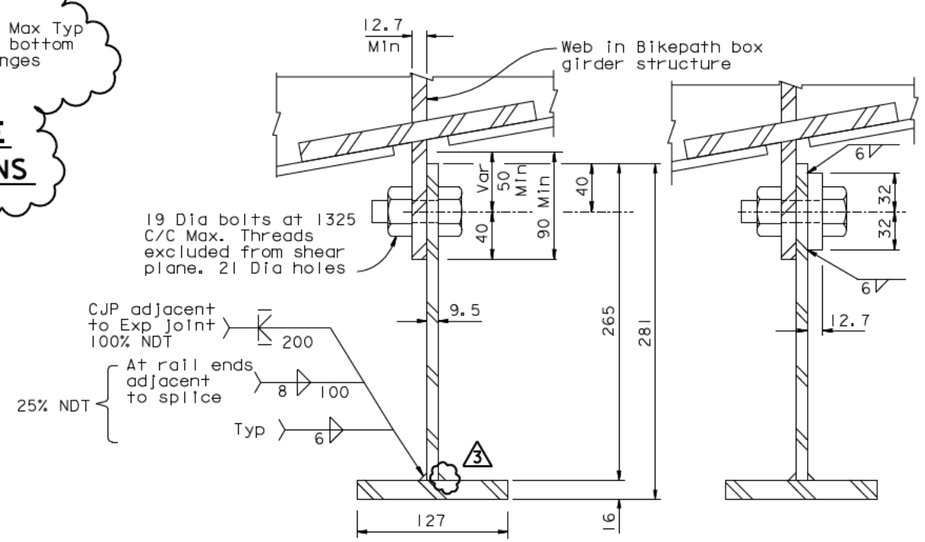

TYP SECTION — SECTION WITH PL 12.7

RAIL TYPE 1
1:2.5

ALL DIMENSIONS ARE IN MILLIMETERS UNLESS OTHERWISE SHOWN

NOTES:

1. Rail & other noted material to be hot dipped galvanized.
2. Materials - 3
   - Rails - All steel - ASTM A572 Grade 50. (Fy=345 MPa)
   - All other plates and shapes - ASTM A572 Grade 40. (Fy = 275) Min

3 REVISION 3 SUPERSEDES REVISIONS 1 & 2

CONTRACT CHANGE ORDER NO. ____
SHEET ___ OF ___

REQUESTS FOR INFORMATION NOT ADDRESSED IN THIS CCO REMAIN IN FORCE

MARK	DATE	DESCRIPTIONS	BY	CH'D	CCO#
3	05/18/09	TRAVELER RAIL MODIFICATIONS	RM	NV	2450
2	07/20/07	RAIL CHANGE & MISCELLANEOUS DETAILS	RM	NV	24
1	08/04/06	TRAVELER RAILS	RM	NV	24

REVISIONS

R. Valizadeh/V. Toan/Y.L./W.L./F.C.
DESIGN OVERSIGHT
SIGN OFF DATE 05/18/09

	BY	CHECKED
DESIGN	J. Otter	R. Manzanarez
DETAILS	J. Otter	J. Leventini
QUANTITIES	J. Otter	J. Leventini

PREPARED FOR THE STATE OF CALIFORNIA DEPARTMENT OF TRANSPORTATION

R. Manzanarez
PROJECT ENGINEER

BRIDGE NO. 34-0006L/R
KILOMETER POST 13.2/13.9

SAN FRANCISCO OAKLAND BAY BRIDGE
EAST SPAN SEISMIC SAFETY PROJECT
SELF-ANCHORED SUSPENSION BRIDGE
(SUPERSTRUCTURE & TOWER)

E2/E3 BIKEPATH TRAVELER RAILS-02

Rev. Date: 5-18-98

ORIGINAL SCALE IN MILLIMETERS FOR REDUCED PLANS 0 10 20 30 40 50 60 70 80 90 100

CU 04
EA 0120F1

DISREGARD PRINTS BEARING EARLIER REVISION DATES — REVISION DATES (PRELIMINARY STAGE ONLY) 04/18/02 07/19/02 12/19/02

SHEET 737R3 OF

FILE -> I:\bb\04-012001\sas\contract plans and cco\cco\cco#24s0\2-revision 05-18-09\dgn\aktrv135.dgn

USERNAME => dwinrow DATE PLOTTED => 19 MAY 2009 TIME PLOTTED => 16:58:38

100% PS&E

DIST.	COUNTY	ROUTE	KILOMETER POST TOTAL PROJECT	SHEET NO.	TOTAL SHEETS
04	SF	80	13.2/13.9	1155R3	1204

Caltrans Metric

REGISTERED ENGINEER - CIVIL

12-6-04
PLANS APPROVAL DATE

The State of California or its officers or agents shall not be responsible for the accuracy or completeness of electronic copies of this plan sheet.

REGISTERED PROFESSIONAL ENGINEER Rafael Manzanarez No. C 36842 Exp. 6/30/10 CIVIL STATE OF CALIFORNIA

T.Y. LIN / MOFFATT & NICHOL
825 BATTERY STREET
SAN FRANCISCO, CA 94111

Caltrans now has a web site! To get to the web site, go to: http://www.dot.ca.gov

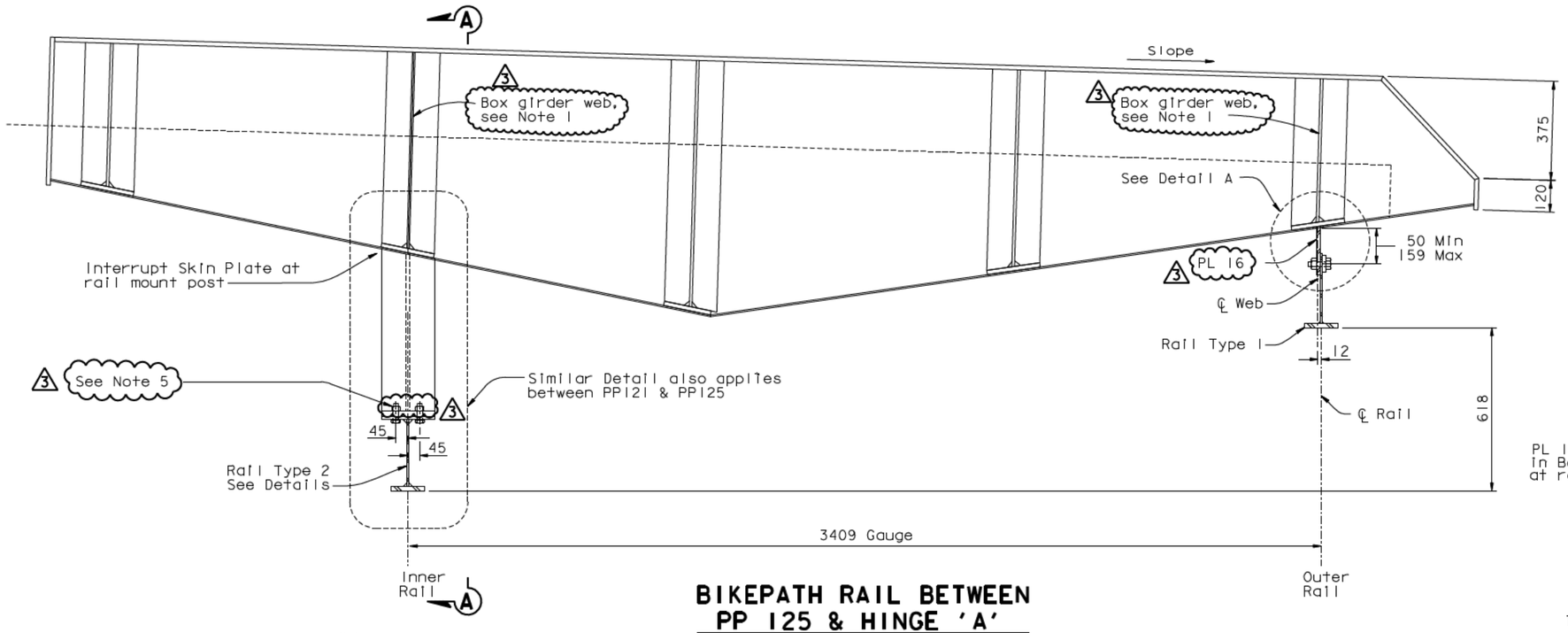

BIKEPATH RAIL BETWEEN PP 125 & HINGE 'A'

1:10

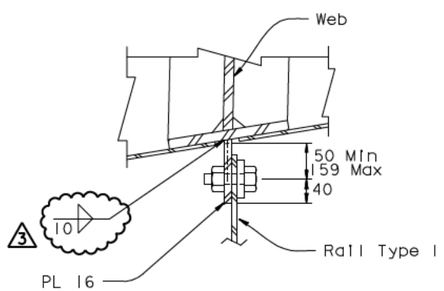

DETAIL A

1:5

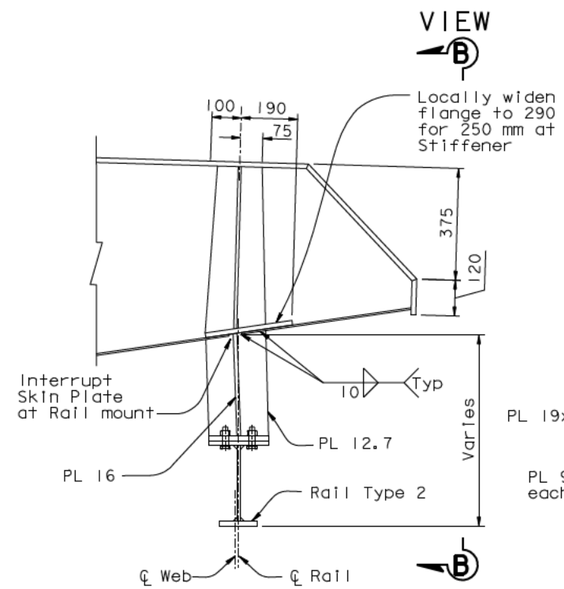

OUTER RAIL BETWEEN PP 121 & PP 125

1:10

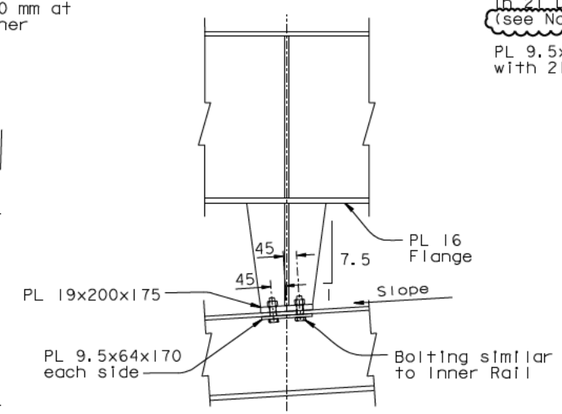

VIEW B-B

1:10

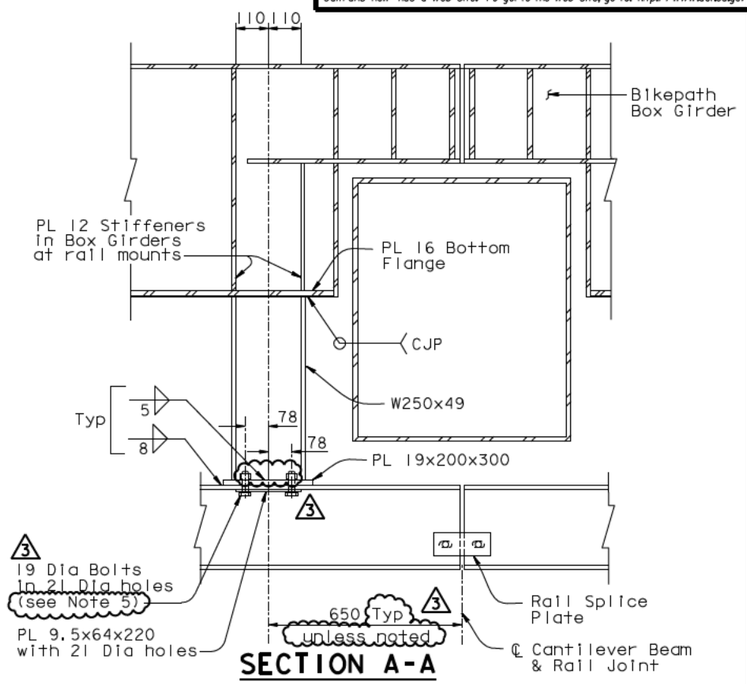

SECTION A-A

AT CANTILEVER BEAMS

1:10

NOTES:

1. Locate webs in Box Girders to suit rail locations as shown.
2. For additional connection details, see "Bikepath Details No. 3" sheet.
3. For Rail Layouts, see "E2/E3 Bikepath Traveler Rails-01" sheet.
4. For Rail Type 1 & 2 Details, see "E2/E3 Bikepath Traveler Rails-02" sheet.
5. At Sliding(S) Mounting: A325 bolt with SAE J429 Grade 5 heavy hex locknut (TRI-LOC Top Lock Locknut), snug tightened to 20 Ft-lbs torque. At Fixed(F) Mounting: A325 bolt with heavy hex nut, fully tensioned.

3 REVISION 3 SUPERSEDES REVISIONS 1 & 2

CONTRACT CHANGE ORDER NO. ____
SHEET ___ OF ___

REQUESTS FOR INFORMATION NOT ADDRESSED IN THIS CCO REMAIN IN FORCE

MARK	DATE	DESCRIPTIONS	BY	CH'D	CCO#
3	05/18/09	TRAVELER RAIL MODIFICATIONS	RM	NV	2450
2	07/20/07	RAIL CHANGE & MISCELLANEOUS DETAILS	RM	JD	24
1	08/04/06	TRAVELER RAILS	RM	NV	24

REVISIONS

	BY	CHECKED
DESIGN	J. Otter	R. Manzanarez
DETAILS	J. Otter	J. Leventini
QUANTITIES	J. Otter	J. Leventini

R. Vallzadeh/V. Toan/Y.L./W.L./F.C.
DESIGN OVERSIGHT
SIGN OFF DATE 05/18/09

PREPARED FOR THE STATE OF CALIFORNIA DEPARTMENT OF TRANSPORTATION

R. Manzanarez
PROJECT ENGINEER

ALL DIMENSIONS ARE IN MILLIMETERS UNLESS OTHERWISE SHOWN

BRIDGE NO. 34-0006L/R
KILOMETER POST 13.2/13.9

CU 04
EA 0120F1

DISREGARD PRINTS BEARING EARLIER REVISION DATES

SAN FRANCISCO OAKLAND BAY BRIDGE
EAST SPAN SEISMIC SAFETY PROJECT
SELF-ANCHORED SUSPENSION BRIDGE
(SUPERSTRUCTURE & TOWER)

E2/E3 BIKEPATH TRAVELER RAILS-03

REVISION DATES (PRELIMINARY STAGE ONLY) 04/19/02 07/01/02 12/19/02

SHEET 738R3 OF

Rev. Date: 5-18-98

ORIGINAL SCALE IN MILLIMETERS FOR REDUCED PLANS 0 10 20 30 40 50 60 70 80 90 100

FILE -> I:\bb\04-012001\sas\contract plans and cco\cco\cco#24s0\2-revision 05-18-09\dgn\aktrv136.dgn

USERNAME => cwinrow DATE PLOTTED => 19 MAY 2009 TIME PLOTTED => 16:59:29

100% PS&E

DIST.	COUNTY	ROUTE	KILOMETER POST TOTAL PROJECT	SHEET NO.	TOTAL SHEETS
04	SF	80	13.2/13.9	1156R2	1204

Caltrans Metric

REGISTERED ENGINEER - CIVIL

12-6-04
PLANS APPROVAL DATE

REGISTERED PROFESSIONAL ENGINEER Rafael Manzanarez No. C 36842 Exp. 6/30/10 CIVIL STATE OF CALIFORNIA

The State of California or its officers or agents shall not be responsible for the accuracy or completeness of electronic copies of this plan sheet.

T.Y. LIN / MOFFATT & NICHOL
825 BATTERY STREET
SAN FRANCISCO, CA 94111

Caltrans now has a web site! To get to the web site, go to: http://www.dot.ca.gov

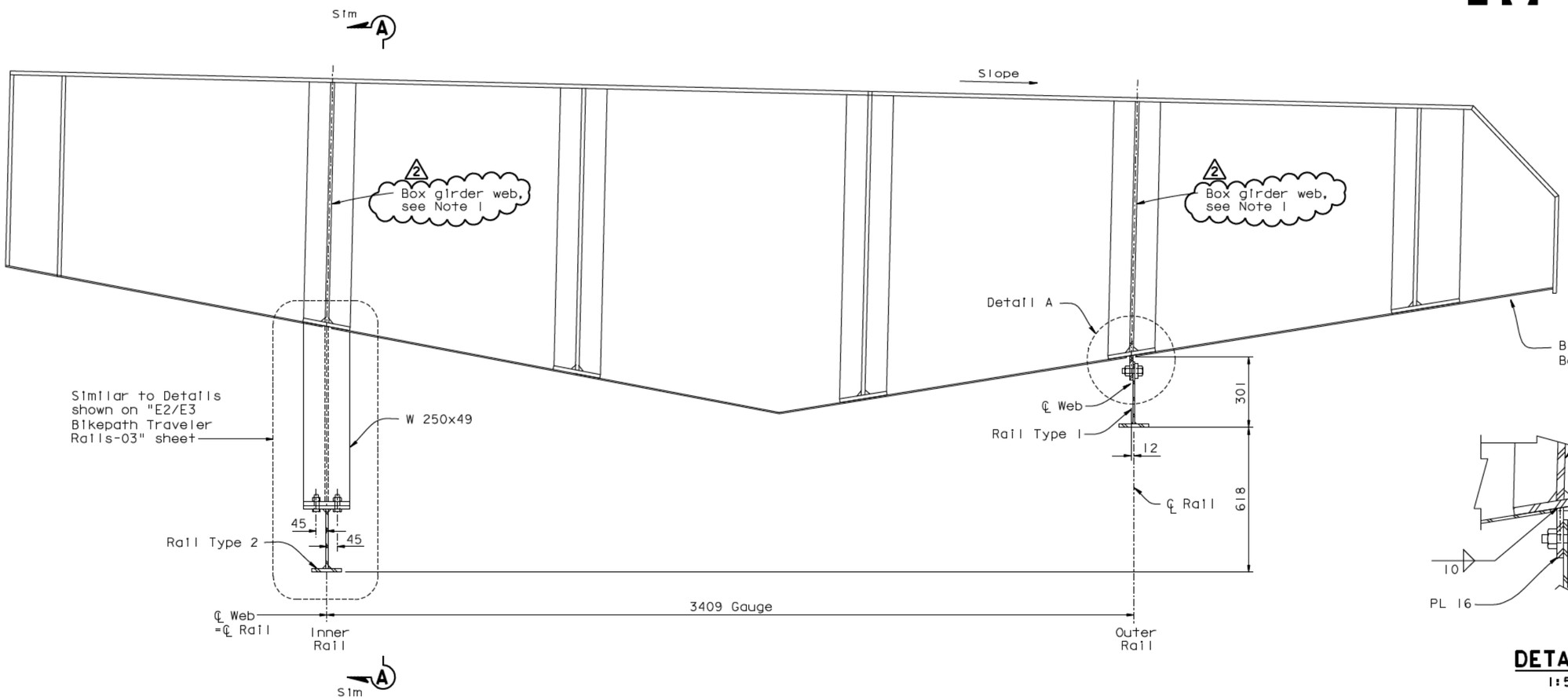

BIKEPATH RAIL BETWEEN PP 117 & PP 121

1:10

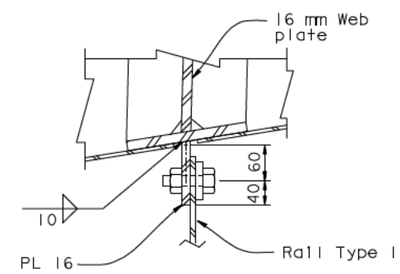

DETAIL A

1:5

NOTES:

1. Locate webs in box girders to suit rail locations as shown.
2. For additional connection details, see "Bikepath Details No.3" sheet.
3. For Rail Layouts, see "E2/E3 Bikepath Traveler Rails-01" sheet.
4. For Rail Type 1 and Type 2 Details, see "E2/E3 Bikepath Traveler Rails-02" sheet.
5. For Section A-A, see "E2/E3 Bikepath Traveler Rails-03" sheet.

2 REVISION 2 SUPERSEDES REVISION 1

CONTRACT CHANGE ORDER NO. ____
SHEET ___ OF ___

REQUESTS FOR INFORMATION NOT ADDRESSED IN THIS CCO REMAIN IN FORCE

ALL DIMENSIONS ARE IN MILLIMETERS UNLESS OTHERWISE SHOWN

R. Vallzadeh/V. Toan/Y.L./W.L./F.C.
DESIGN OVERSIGHT
Roya Valizadeh / Vong Toan / Y. Liu
SIGN OFF DATE 05/18/09

MARK	DATE	DESCRIPTIONS	BY	CH'D	CCO#
2	05/18/09	TRAVELER RAIL MODIFICATIONS	RM	NV	2450
1	08/04/06	TRAVELER RAILS	RM	NV	24

REVISIONS

	BY	CHECKED
DESIGN	J. Otter	R. Manzanarez
DETAILS	J. Otter	J. Leventini
QUANTITIES	J. Otter	J. Leventini

PREPARED FOR THE STATE OF CALIFORNIA DEPARTMENT OF TRANSPORTATION

R. Manzanarez
PROJECT ENGINEER

BRIDGE NO. 34-0006L/R
KILOMETER POST 13.2/13.9

SAN FRANCISCO OAKLAND BAY BRIDGE
EAST SPAN SEISMIC SAFETY PROJECT
SELF-ANCHORED SUSPENSION BRIDGE
(SUPERSTRUCTURE & TOWER)

E2/E3 BIKEPATH TRAVELER RAILS-04

Rev. Date: 5-18-98

ORIGINAL SCALE IN MILLIMETERS FOR REDUCED PLANS 0 10 20 30 40 50 60 70 80 90 100

CU 04
EA 0120F1

DISREGARD PRINTS BEARING EARLIER REVISION DATES

REVISION DATES (PRELIMINARY STAGE ONLY) 04/18/02 07/09/02 12/19/02

SHEET 739R2 OF

100 % PS&E

USERNAME => dwinrow DATE PLOTTED => 19 MAY 2009 TIME PLOTTED => 17:00:24

FILE -> I:\bb\04-012001\sas\contract plans and cco\cco\cco#2450\2-revision 05-18-09\dgn\aktrv137.dgn

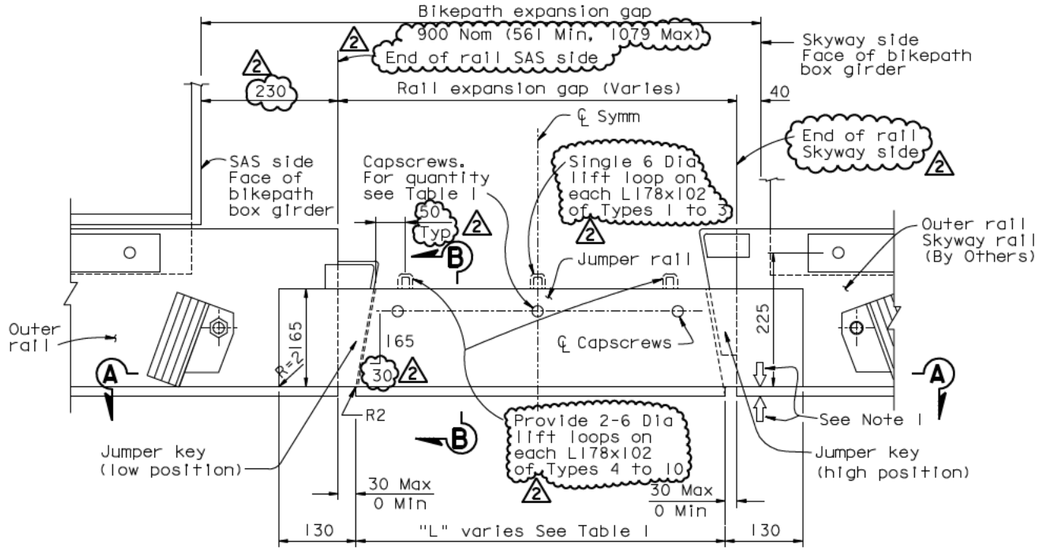

JUMPER RAIL DETAIL

1:5

Shown at outer rail - Inner rail Sim

TABLE 1

JUMPER RAIL TYPES AND QUANTITIES				
Type	Rail Exp Gap	Dim "L"	Quantity Req'd	No. of Capscrews
1	120-180	118	3	1
2	180-240	178	3	2
3	240-300	238	3	2
4	300-360	298	3	3
5	360-420	358	3	3
6	420-480	418	3	3
7	480-540	478	3	3
8	540-600	538	3	3
9	600-660	598	3	4
10	660-720	658	3	4

Provide single lift loop on each angle of each Jumper Types 1 to 3

Provide 2-6 Dia lift loops on each angle of each Jumper Types 4 to 10

Note: All jumper steel A572 GR50 (350 MPa). Material to be galvanized.

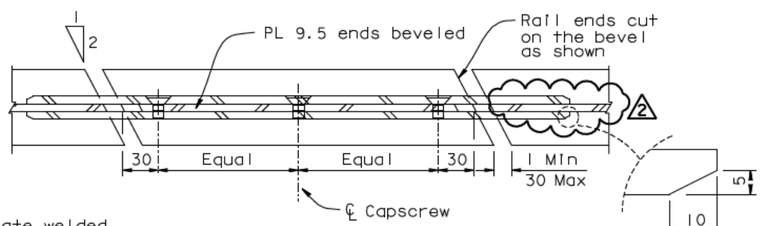

SECTION A-A

1:5

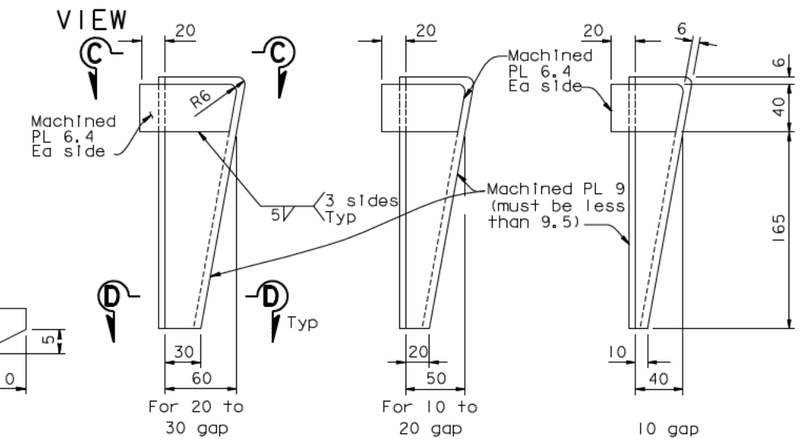

JUMPER KEY DETAILS

1:2.5

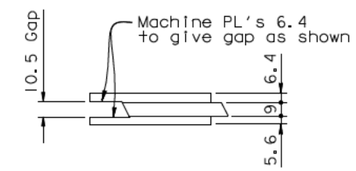

VIEW C-C

1:2

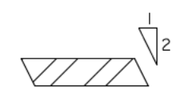

SECTION D-D

1:1

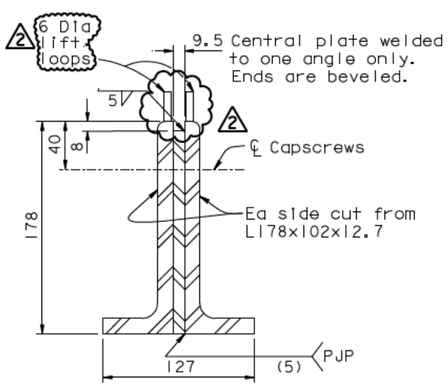

SECTION B-B

1:2.5

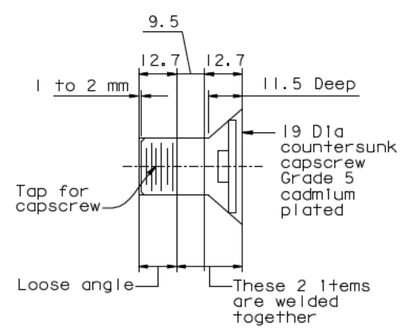

CAPSCREW DETAIL

1:1

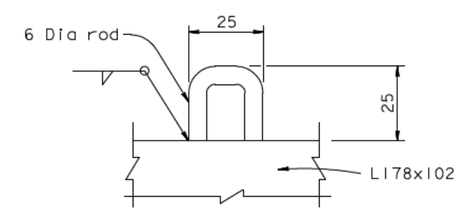

LIFT LOOP DETAIL

NOTES:

1. Use vicegrips or other clamps to hold first side of jumper rail in place while second side is attached.
2. Store up to 2 of each jumper Type 1 to 10 on the traveler. Retain the balance elsewhere for spares.

REVISION 2 SUPERSEDES REVISION 1

CONTRACT CHANGE ORDER NO. ____
SHEET ___ OF ___

REQUESTS FOR INFORMATION NOT ADDRESSED IN THIS CCO REMAIN IN FORCE

ALL DIMENSIONS ARE IN MILLIMETERS UNLESS OTHERWISE SHOWN

MARK	DATE	DESCRIPTIONS	BY	CH'D	CCO#
2	05/18/09	TRAVELER RAIL MODIFICATIONS	RM	NV	24S0
1	08/04/06	TRAVELER RAILS	RM	NV	24

REVISIONS

R. Vallizadeh/V. Toan/Y.L./W.L./F.C.
DESIGN OVERSIGHT
SIGN OFF DATE 05/18/09

DESIGN BY J. Otter CHECKED R. Manzanarez
DETAILS BY J. Otter CHECKED J. Leventini
QUANTITIES BY J. Otter CHECKED J. Leventini

PREPARED FOR THE STATE OF CALIFORNIA DEPARTMENT OF TRANSPORTATION

R. Manzanarez
PROJECT ENGINEER

BRIDGE NO. 34-0006L/R
KILOMETER POST 13.2/13.9

SAN FRANCISCO OAKLAND BAY BRIDGE
EAST SPAN SEISMIC SAFETY PROJECT
SELF-ANCHORED SUSPENSION BRIDGE
(SUPERSTRUCTURE & TOWER)

E2/E3 BIKEPATH TRAVELER RAILS-06

Rev. Date: 5-18-98

ORIGINAL SCALE IN MILLIMETERS FOR REDUCED PLANS 0 10 20 30 40 50 60 70 80 90 100

CU 04
EA 0120F1

DISREGARD PRINTS BEARING EARLIER REVISION DATES

REVISION DATES (PRELIMINARY STAGE ONLY) 04/15/02 07/29/02 12/19/02

SHEET 74 OF IR2

FILE -> I:\bb\04-01200\sas\contract plans and cco\cco\cco#24s0\2-revision 05-18-09\dgn\aktrv139.dgn

USERNAME => dwinrow TIME PLOTTED => 17:01:40 19 MAY 2009

100 % PS&E

DIST.	COUNTY	ROUTE	KILOMETER POST TOTAL PROJECT	SHEET NO.	TOTAL SHEETS
04	SF	80	13.2/13.9	1158R2	1204

REGISTERED ENGINEER - CIVIL
12-6-04
PLANS APPROVAL DATE

REGISTERED PROFESSIONAL ENGINEER Rafael Manzanarez No. C 36842 Exp. 6/30/10 CIVIL STATE OF CALIFORNIA

The State of California or its officers or agents shall not be responsible for the accuracy or completeness of electronic copies of this plan sheet.

T.Y. LIN / MOFFATT & NICHOL
825 BATTERY STREET
SAN FRANCISCO, CA 94111

Caltrans now has a web site! To get to the web site, go to: http://www.dot.ca.gov

CONTRACT CHANGE ORDER

Change Requested by: Engineer

CCO: 24 **Suppl. No. 1** **Contract No. 04 – 0120F4** **Road** SF-80-13.2/13.9 **FED. AID LOC.:**

To: **AMERICAN BRIDGE/FLUOR ENTERPRISES INC A JOINT VENTURE**

You are directed to make the following changes from the plans and specifications or do the following described work not included in the plans and specifications for this contract. ***NOTE: This change order is not effective until approved by the Engineer.***

Description of work to be done, estimate of quantities and prices to be paid. (Segregate between additional work at contract price, agreed price and force account.) Unless otherwise stated, rates for rental of equipment cover only such time as equipment is actually used and no allowance will be made for idle time. This last percentage shown is the net accumulated increase or decrease from the original quantity in the Engineer's Estimate.

This change includes, but is not limited to, the following:

- Modify the traveler motors and trolleys
- Modify the traveler brake system
- Modify the pneumatic system
- Revise the testing procedures of the travelers including construction of a testing frame.
- Revise paint and other protective coatings specifications for various traveler components

Adjustment of Compensation at Lump Sum Price:

Revise Special Provisions Section 10-1.63 "Traveler Scaffolds," as shown on sheets 3 through 18 of this Change order. Modify maintenance traveler components as shown on sheets 19 through 120 of this change order. Insert the following after the 7th paragraph of Special Provisions section 10-1.64 "Traveler Support Rails."

"**Teflon**

Teflon (PTFE) for sliding bearings in the rail supports shall be commercial as follows:

PTFE shall be manufactured from pure virgin unfilled TFE resin conforming to ASTM D1457. PTFE shall be resistant to acids, alkalis and petroleum products; non-absorbing of water; stable from -360°F to +500°F; and non-flammable. It shall meet the following test requirements:

Physical Property	ASTM Test Method	Requirement (min.)
Ultimate tensile strength	D1457	2800 psi
Ultimate elongation	D1457	200%
Specific Gravity	D792	2.12

REGISTERED PROFESSIONAL ENGINEER MARWAN N. NADER No. C 054426 Exp. 12/11 CIVIL STATE OF CALIFORNIA

Adhesive

Adhesive used for bonding sheet PTFE shall be an epoxy material stable from -100°F to +250°F.

The Contractor shall supply the following items as spare parts. These shall be delivered to a location to be specified by the engineer.

- 100% extra quantity of nylon bearings for sliding rail connections for traveler rails crossing the Hinge A joint.
- 10% extra quantity of 6.4 and 9.5 mm thick teflon pads for sliding rail connections"

The following revised contract plan and supplemental sheets detail all changes:

1007R2, 1008R3, 1011R4, 1018R4, 1028R4, 1036R4, 1038R2, 1039R1, 1040R1, 1046R1, 1047R2, 1048R2, 1049R1, 1050R1, 1051R1, 1052R1, 1053R1, 1054R1, 1055R3, 1056R1, 1057R1, 1065R3, 1066R1, 1067R1, 1074R1, 1076R1, 1077R2, 1079R1, 1080R1, 1081R1, 1084R1, 1085R1, 1086R1, 1087R1, 1090R4, 1090S1, 1091R2, 1092R2, 1093R1, 1094R1, 1096R2, 1097R1, 1098R1, 1099R3, 1100R2, 1101R2, 1103R1, 1104R2, 1105R3, 1106R1, 1107R3, 1109R2, 1110R3, 1111R5, 1112R3, 1113R2, 1114R2, 1115R3, 1115S1, 1116R3, 1117R2, 1118R2, 1119R3, 1119S1, 1119S2, 1134R3, 1134S1R2, 1134S2, 1135R3, 1135S1R1, 1135S2, 1140R1, 1145R2, 1146R3, 1147R2, 1148R2, 1149R1, 1150R2, 1151R2, 1152R1, 1152S1R1, 1157R2, 1159R2, 1159S1R1, 1160R2, 1161R3, 1161S1, 1161S2, 1161S3, 1161S4R1, 1161S5, 1163S1, 1163S2, 1163S3, 1163S4, 1163S5, 1163S6, 1163S7, 1163S8, 1163S9, 1163S10 and 1163S11 (of 1204).

This change order includes resolutions for Contractor Request for Information (RFI) Nos. 226R1, 1050R0, 1066R0, 1112R0, 1112R1, 1598R0, 1599R0, 1713R0, 1763R0, 1918R0, 1944R0, 1946R0, 1950R0, 1953R0, 1955R0,

CONTRACT CHANGE ORDER

Change Requested by: Engineer

CCO: 24 Suppl. No. 1 Contract No. 04 – 0120F4 Road SF-80-13.2/13.9 **FED. AID LOC.:**

1968R0, 1969R0, 1970R0, 1971R0, 1972R0, 2117R0, 2123R0, 2126R0, 2127R0, 2140R0, 2151R0, 2155R0, 2164R0, and 2190R0.

The Contractor shall submit a schedule of values for erection of the traveler testing frame and the setup of the travelers on the testing frame for approval by the Engineer. When approved in writing by the Engineer, the schedule of values will be used to determine progress payments for the traveler testing frame erection and setup of the travelers for testing in the shop.

For this work, the Contractor will receive a lump sum price of $2,703,527.54. This sum constitutes full and complete compensation for furnishing all labor, material, tools and incidentals including all markups by reason of this Change.

Adjustment of Compensation at Lump Sum Price $2,703,527.54

Extra Work at Force Account:

Extra work at force account shall be used to compensate the Contractor as follows or as directed by the Engineer:

1. Welding Quality Control inspection of the traveler testing frame at the fabrication facility.
2. Testing of each of the traveler trolley trains at the fabrication facility after set up and check for operability.
3. Testing of the SAS Eastbound and E2/E3 Eastbound travelers at the fabrication facility after set up and check for operability.
4. Any testing of travelers on the bridge that exceeds a) the cumulative total of 90 manhours for ABFJV or b) for the supplier's on-site technical representative, one trip per traveler or 10 days per traveler.
5. Adjustment of the traveler components from initially approved settings during testing.
6. Any land rental cost at Port of Long Beach that exceeds $40,000.00.
7. Any shipping costs to the job site that exceeds $110,000.00.
8. Packing, crating and offsite storage of the IR and Twiflex components.
9. Application of protective coatings to all wood components on the travelers.
10. Additional funds for CCO 24S0, Item No. 6 Extra Work At Force Account.

Labor, equipment and material authorized by the Engineer, as necessary, will be paid in accordance with the provisions of Section 4-1.03D, "Extra Work" of the Standard Specifications and Section 5-1.24, "Force Account Payment" of the Special Provisions.

Estimated cost of Extra Work at Force Account $1,000,000.00

Estimated Cost: Increase ☒ Decrease ☐ $3,703,527.54

By reason of this order the time of completion will be adjusted as follows: Deferred

Submitted by

Signature Kannu Balan	**Resident Engineer** Kannu Balan, Senior TE	**Date** 2-9-2011

Approval Recommended by

Signature Pete Siegenthal	**Supervising Bridge Engineer** William Casey, Sup. BE	**Date** 2-9-11

Engineer Approval by

Signature Pete Siegenthal	**Principal Transportation Engineer** Peter Siegenthaler, Prin. TE	**Date** 4-12-11

We the undersigned contractor, have given careful consideration to the change proposed and agree, if this proposal is approved, that we will provide all equipment, furnish the materials, except as otherwise be noted above, and perform all services necessary for the work above specified, and will accept as full payment therefor the prices shown above.

NOTE: If you, the contractor, do not sign acceptance of this order, your attention is directed to the requirements of the specifications as to proceeding with the ordered work and filing a written protest within the time therein specified.

Contractor Acceptance by

Signature	(Print name and title) BRIAN A. PETERSEN - PROJECT DIRECTOR	**Date** 11 APRIL 11

Special Provisions Changes

10-1.63 TRAVELER SCAFFOLDS
GENERAL
This work shall consist of furnishing, fabricating, testing and installing five under-deck traveler scaffolds in accordance with the details shown on the plans and the provisions of Section 55, "Steel Structures," Section 57, "Timber Structures," of the Standard Specifications, and these special provisions.

Attention is directed to "Welding" of these special provisions regarding welding of traveler scaffolds. Unless otherwise specified, welding of traveler scaffolds shall be in conformance with the requirements in AWS D1.1. The Contractor shall fully detail the travelers and all their components in accordance with the details shown on the plans and shall be responsible for verifying all dimensions and identifying any conflicts and bring these to the attention of the Engineer for resolution.

The Contractor shall confirm all dimensions, clearances and fit of the travelers to the permanent structure. Any conflicts shall be brought to the attention of the Engineer for resolution.

For the pneumatic systems, the Contractor shall submit working drawings showing the final layout of the systems, generally following the schematics shown on the Contract Plans and respecting the operational and functional requirements as shown on the plans and as described herein.

This work shall include all final component design, where applicable, shop and field testing, and operator instruction for mechanical and pneumatic systems.

Each traveler shall be fully assembled in the shop before shipping to ensure proper fit of all parts and elements.

Unless otherwise noted, exposed steel shall be painted in accordance with the provisions of Section 59, "Painting," of the Standard Specification, and "Clean and Paint Structural Steel" of these Special Provisions, except that painting of the traveler scaffolds performed at the traveler fabrication facility may be performed by a paint applicator certified in conformance with the requirements in Qualification Procedure No. 1, "Standard Procedure For Evaluating Painting Contractors" (SSPC-QP 1). ~~Exposed moving parts of the drive machinery shall be painted OSHA safety red, orange, yellow or green conforming to the requirements of ANSI Z54.2.~~

Attention is directed to "Relations with United States Coast Guard" of these special provisions.

The Contractor shall demonstrate experience in the design and installation of pneumatic systems, and shall have completed a minimum of 3 successful bridge traveler or similar underhung crane projects within the last 5 years.

A qualified technical representative of the manufacturer(s) shall be present during installation and testing of the travelers.

The Contractor shall provide one experienced service technician for a minimum of 8 working days to instruct personnel appointed by the Engineer on how to properly operate and maintain the travelers.

Stainless steel capacity plates shall be furnished and installed indicating the permitted live loading using the wording noted on each individual traveler assembly drawing. Attachments shall be by means of corrosion-resistant fasteners. The plates shall be mounted where they are visible to the personnel on the traveler.

Each traveler shall be provided with four navigation lights meeting minimum Coast Guard navigation requirements for inland waterways for visibility and color. The navigation lights shall be watertight and be capable of being maintained from the traveler. The navigation lights shall be equipped with 60 meter long extension chords for attachment to 110 volt power to be supplied by others.

Any materials damaged during shipment or handling shall be repaired or replaced at the Contractor's expense.

The fourth paragraph in Section 55-2.02, "Structural Steel," and the fourth paragraph in Section 55-2.07, "Unidentified Stock Material," of the Standard Specifications shall not apply.

MATERIAL AND WORKMANSHIP

Bolts, nuts and washers, except where specified to be stainless steel, shall be galvanized in accordance with the provisions in Section 75-1.05, "Galvanizing," of the Standard Specifications.

Bolts, nuts and washers shall conform to the United States Standard Measures version of ASTM Designation: A325 unless noted otherwise on the plans.

Bolted connections shall conform to requirements in "Specification for Structural Joints Using ASTM A 325 or A 490 Bolts" (RCSC Specification) approved by the Research Council on Structural Connections of the Engineering Foundation.

Structural Steel

The specific requirements for grades of steel are shown on the plans.

Tubular or pipe connections

~~Dimensional details and workmanship for welded joints in tubular and pipe connections shall conform to the provisions in Part C, Structural Details; Part D, Special Provisions for Welding Tubular Joints; and Part E, Workmanship, in Section 10 of AWS D1.1.~~

Dimensional details and workmanship for welded joints in tubular and pipe connections shall conform to the provisions in Part A, "Common Requirements of Nontubular and Tubular Connections," and Part D, "Special Requirements for Tubular Connections," in Section 2 of AWS D1.1.

Decking Plywood

Plywood panels for decking shall conform to or exceed the requirements of U.S. Product Standard PS-1-9S for APA Structural 1 AB Marine Grade. Plywood shall be pressure treated. Plywood panels for decking shall be painted on all sides and edges with a commercial marine grade spar varnish. The varnish shall not contain linseed oil and shall be applied according to manufacturer's instructions. Fine silica sand shall be broadcast into the final coat of the upper surface of the decking at the rate of 1.5 kg per square meter of surface area.

Deck – Expanded Metal Grating

Where expanded metal grating is called on the plans, it shall be expanded metal structural grating of the weight size and style shown on the drawings.

The grating shall be trimmed at its edges with U edging or flat bar edging as shown on the drawings. The edging material is to be welded to the grating.

The grating assemblies are to be hot dip galvanized in accordance with the specifications and shall not be painted with finish paint.

The grating has been specified using the designations generally employed by Dramex Corporation and McNichols Company. Grating by other manufacturers of equal thickness and strength and slip resistance is acceptable.

Wooden Toeboards and Curbs

Wooden toeboards and curbs shall be pressure treated S4S Douglas Fir~~. Toebaords~~ and shall be painted on all sides with a commercial marine grade spar varnish. The varnish shall not contain linseed oil and shall be applied according to manufacturer's instructions.

Pressure Treatment of Wood

Pressure treatment shall conform to AWPA Standard C1 to a retention of at least 1.95 kg/m3.

Hardware for wooden toeboards and curbs

Hardware shall consist of all fasteners, carriage bolts with attached washer used to attach decking to the steel structure, lag screws or bolts through the toeboards, blind rivets, oil impregnated bronze bars, stainless steel socket set screws, or any other hardware shown on the plans to attach the decking or toeboards to the traveler structure and shall conform to Section 75-1.02, "Miscellaneous Iron and Steel," of the Standard Specifications.

Rigging Hardware (Shackles etc.)

Rigging hardware shall be hot dip galvanized or zinc plated and shall meet the strength requirements shown on the specific plans.

The travelers have been detailed using the dimensions for Crosby material. Part numbers are given. Substitutions of equal strength are permitted. The Traveler supplier shall re-detail any parts affected by such substitutions.

Nylon

Nylon elements are to be made from Nylon 101, unfilled, Type 66 nylon, having the following physical characteristics:

Tensile Strength:	79 MPa
Modulus of Elasticity (Tensile):	2900 MPa
Hardness - Rockwell M:	85 MPa

Substitution of Nylatron GS Nylon, Type 66, MoS2 filled will be accepted.

The Contractor shall supply additional nylon parts for spares.

Chains

Chains shall be hot dip galvanized and shall have the minimum tensile strengths shown on the plans.

~~Blind Rivets~~ Fasteners

~~Blind rivets~~ Fasteners for connecting plywood deck to the traveler ~~shall be stainless steel, 4.8 mm diameter and~~ shall be installed at ~~305 mm maximum on center along edges of plywood sheets and at 610 mm on center on intermediate supports~~ spacing called out on the contract plans unless otherwise specified. ~~Blind rivets~~ Fasteners are not to be installed into any tubular sections.

Fasteners shall be stainless steel self-tapping screws as called out in the contract plans. The type of stainless steel is to be suitable for marine exposure. Fabricator shall propose the type of stainless steel.

~~**Teflon**~~

~~Teflon for sliding bearings in the rail supports shall be commercial.~~

Non-destructive testing of the welds

Complete joint penetration (CJP) welds on all suspension components including links, suspension arms and lift plates, shall be 100 percent magnetic particle inspected and 100 percent radiographically or ultrasonically inspected. Partial joint penetration (PJP) and fillet welds on all suspension components including links, suspension arms and lift plates, shall be 100 percent magnetic particle inspected. Other CJP welds shall be 10% radiographically or ultrasonically inspected. Other PJP and fillet welds shall be 10% magnetic particle inspected.

Categories of welds not 100% tested shall be sampled at the specified rate by inspecting 100% of one weld out of each 10 similar welds within the production lot for a 10% rate. If any rejectable indications are found, an additional weld shall be 100% inspected by the same method. If any rejectable indications are found in the additional weld, all welds in the lot shall be inspected 100%. If any rejectable indications are found in the remainder, the sampling rate shall be doubled. All rejected welds shall be repaired, or replaced, and retested 100% by the same method.

The fabricator shall submit detailed magnetic particle~~s~~, ultrasonic, and radiographic test procedures to the Engineer for review, and shall not proceed with the testing until the Engineer has approved the procedures.

Other welds are to be non-destructively tested at the frequency shown on the plans or described in other parts of these special provisions, whichever is the greater.

The acceptance criteria for UT shall be per AWS D1.1, Table 6.2 for non-tubular or CJP welds on square tubular connections 6mm or greater in thickness and section 6.13.3.1. and Class R for all other CJP tubular welds.

The acceptance criteria for RT shall be per AWS D1.1, section 6.12.3.

For all welds requiring 100% NDT, undercut shall be no more than 0.25mm deep. Undercut shall be no more than 1mm deep for all other welds.

For all welds requiring 100% NDT, the welds shall have no piping porosity. The frequency for piping porosity for other welds shall be no more than one in 100mm of weld length and the maximum diameter shall not exceed 2.5mm. All other requirements of Table 6.1 apply.

Marine Grade Epoxy Finish

Marine grade epoxy finish shall conform to the ~~requirements of these special provisions. Surfaces to be coated with marine grade epoxy shall be blast cleaned in accordance with the requirements in Section 59-2.03 "Blast Cleaning," of the Standard Specifications.~~ Manufacturer's recommended standard marine grade epoxy finish as approved by the Engineer and these Special Provisions.

~~Marine grade epoxy shall be applied to two coats. The dry film thickness of the each coat shall not be less than 100 microns minimum nor more than 150 microns maximum.~~

The final coat color shall match Federal Standard No. 595B, No. 13432, or other contrasting safety color proposed by the Contractor and subject to the approval of the Engineer.

~~The target minimum total dry film thickness shall be 200 microns for smooth surfaces without major surface discontinuities. The target minimum total dry film thickness shall be 300 microns for mating surfaces.~~

Marine grade epoxy finish for material supplied by Ingersoll Rand shall be Ingersoll Rand paint specification 382-31341, "P1" option or equal, subject to approval of the Engineer.

Electroless Plating – Linear Actuators

Load screws and projecting shafts of the linear actuators shall be electroplated with an amorphous nanocrystalline composite of nickel tungsten and boron.

The coating shall be applied to prepared substrate in accordance with manufacturer's recommendations. Care shall be taken to remove all contaminants from the substrate prior to plating.

The coating shall be deposited to a minimum thickness of 0.001 inch. (0.025 mm).

The coating shall be demonstrated to be unaffected by ASTM Salt Spray Test B117 for a minimum period of 200 hours.

ERECTING, TESTING, AND WEIGHING OF THE COMPLETED TRAVELER

Erection of the Travelers

The Contractor shall be responsible for devising and executing an erection method for the travelers including the provision of all required calculations, the supply of any necessary temporary material, and the development of appropriate method statements.

Unless otherwise approved by the Engineer, the requirements of the erection method shall not increase the weight of the traveler.

Weighing of Traveler

The Contractor shall carry out a detailed weight take off for all the travelers and shall submit this to the Engineer for his review prior to starting any fabrication.

Each traveler scaffold shall be weighed prior to installation on the bridge, with the method of weighing subject to approval by the Engineer. The weights for each traveler shall be taken and recorded at each trolley support; the total weight will be the sum of those individual weights.

The anticipated weights of the travelers are shown on the individual traveler assembly drawings. Should the actual weight measured deviate from these values by 10% or more, the actual weights shall be submitted to the Engineer for his review and determination of what action, if any, is required.

Pre-test requirements

Before starting or operating systems, the Contractor shall flush and clean equipment and check for proper installation, lubrication and servicing.

General Testing Requirements

~~The Contractor shall test and start up mechanical systems upon installation of the travelers on the bridge as hereinafter specified. The Contractor shall follow the equipment manufacturer's break-in procedure before full load testing for all equipment. Final adjustments and balancing of the systems shall be performed so they will operate as specified. The~~

~~Contractor shall replace or revise any equipment, systems or work found deficient during tests. Particular care shall be used in lubricating bearings to avoid damage by overfilling with lubricant and blowing out seals.~~
~~The Contractor shall repair, or replace with new equipment, any equipment damaged during shipment, after delivery, during installation and during testing.~~
~~The Contractor shall perform tests after installing the hoses to insure the lines are airtight. The test shall be conducted for a period of one hour at the design pressure. Defective work shall be repaired at the Contractor's expense.~~

Shop Testing

One of the completed SAS travelers and one of the completed E2/E3 travelers, as identified on the contract plans, shall be tested in the shop under maximum design loading conditions in the presence of the Engineer as described below. The length and slope of the testing runway shall be as identified on the contract plans. The test runway need not incorporate curved rail. The bikepath traveler does not need to be shop tested.

Field Tests

~~The Engineer shall be notified at least 3 days in advance of starting these tests.~~
Upon completion of mechanical work and pre-test requirements, or at such time prior to completion as determined by the Engineer, the Contractor shall operate and test the travelers and their installed mechanical systems as described below. Travelers which will cross expansion joints in service shall cross at least one expansion joint in each direction during this test.

Each of the completed travelers shall be field tested on the bridge ~~as follows~~.

The Contractor shall furnish, install and remove all temporary apparatus necessary for performing the tests.

Traveler Testing Requirements (Shop and Field Testing)

A. All traveler components, structural, mechanical and pneumatic ~~components~~ shall be completely installed and functional prior to commencement of these tests. All components shall be monitored during the testing to ~~assure~~ ensure that no excessive heating per the manufacturer's guidelines occurs, and that no binding occurs.
B. ~~Tests~~ Testing shall be ~~conducted~~ performed with the traveler fully loaded ~~per~~ to the maximum design live loading stated in the plans.
C. All tests shall be ~~conducted~~ performed in both the upgrade and down grade directions.
D. ~~For the~~ The SAS and E2/E3 travelers~~, the traveler~~ shall be intentionally skewed up to the design value of 10% (5.7 ~~degrees~~ Degrees) in ~~either~~ both directions. As the ~~carriage~~ scaffold is skewed the anti-skew system shall be tested for response to minor and major skew conditions. As the scaffold is skewed, a careful check shall be made for structural or other interferences, and corrections made as ~~necessary~~ required.
E. The traveler speed shall be tested corresponding to design criteria set forth in this specification and the exhaust choke valves adjusted to limit the maximum speed going upgrade to 20 fpm (6.1 m/min).
F. ~~All conditions that prevent the proper functioning of the travelers and appurtenances shall be corrected at the Contractor's expense, as approved by the Engineer.~~ Travelers required to cross an expansion joint in service shall cross at least one expansion joint in each direction during the field test.
G. All testing shall be performed in the presence of the Engineer.
H. The Engineer shall be notified at least 5 working days in advance of starting shop test and 3 working days in advance of starting the field test.
I. Every trolley train shall be shop tested to show that it can negotiate the required rail curvature without binding or jamming. The test radius shall be 5.0 meters for the bikepath traveler trolley train and 10.0 meters for the SAS and E2/E3 trolley trains.
J. Shop testing shall prove the ability of the "dynamic" brakes to stop the traveler safely from a speed of 30 fpm (9.1 m/min) when fully loaded and moving downgrade.
K. The Contractor shall perform tests after installing the hoses to insure the lines are airtight. The test shall be conducted for a period of one hour at the design pressure.

The Contractor shall test and start up mechanical systems upon installation of the travelers. The Contractor shall follow the equipment manufacturers' break-in procedures before full load testing for all equipment. Final adjustments and balancing of the systems shall be performed so they will operate as specified. The Contractor shall replace or revise any equipment or work found to be not operating as specified during tests. Particular care shall be used in lubricating bearings to avoid damage by overfilling with lubricant and blowing out seals.

Defective work shall be repaired at the Contractor's expense. The Contractor shall be responsible to ensure that the pneumatic systems perform in accordance with the operational and functional requirements.

~~The Contractor shall furnish, install and remove all apparatus necessary for performing the tests.~~

TRAVELER SCAFFOLD MECHANICAL

General

Traveler scaffold mechanical consists of furnishing, fabricating, and installing the traveler scaffold mechanical equipment, including the on board air lines, in accordance with the details shown on the plans, the provisions in Section 55, "Steel Structures," of the Standard Specifications and these Special Provisions.

The fourth paragraph in Section 55-2.07, "Unidentified Stock Material," of the Standard Specifications shall not apply. Mechanical work shall include furnishing all detailed ~~design~~ working drawings, labor, materials, equipment and services required to provide operating travelers.

Skew Control Requirements – SAS and E2/E3 Travelers

Each traveler shall be equipped with a positive acting anti-skewing system consisting, in part, of motor controls and, in part, of "dynamic" brakes operated by air relief valves or similar devices. The anti-skewing system has been designed to limit the maximum skew that can develop when the traveler is traveling at 20 feet per minute (6.1 m/min) to a 5.7° (10%) skew.

The traveler has been designed with a "dynamic" brake system capable of stopping the traveler from a speed of 30 feet per minute. The "dynamic" brakes shall be spring actuated and air release. The motorized trolleys shall not be used as a component of the dynamic braking system.

Skew indicators shall be provided at each operator station to show the traveler operator the degree of skew of the travelers with respect to the traveler rails. Two skew indicators shall be provided at each station, one for each direction of travel, allowing the operator to have a skew indicator in his/her field of view while operating the traveler from either side of the operator station.

The operator's station shall be designed so that the operator is able to face the direction of travel and operate the traveler safely in both directions. Two foot-operated deadmans shall be provided at each operator's station so that the traveler can be operated from either side of the operator station. The operator shall be required to keep the foot valve depressed in order to operate the throttle valves.

The anti-skew system shall actuate the "dynamic brakes" when the traveler approaches its critical skew limit of 5.7 ° and shall bring the traveler to a stop from 20 fpm before the skew exceeds 5.7°.

The skew indicators shall be delineated with different colors as shown on the plans to indicate the three ranges of operation. The colors are as follows.

Green indicates normal operation. – zero to 2.8° skew.

Yellow indicates the traveler is skewed beyond the normal operating range of +/- 2.8°. Under this condition the motors on the side causing the skew are to be shut down, allowing the motors on the other side to catch up. The operator shall be able to over-ride the motor shut down when it is necessary to operate the traveler at greater than 2.8° skew. This is to be done by using a hand operated valve that is held closed by a spring and must be depressed by the operator to be opened.

Red indicates the traveler has reached or exceeded its critical skew limit. All brakes shall be applied as the limit is approached to prevent the development of skew exceeding 5.7 ° before the traveler is halted. The operator shall then be able to manually release the brakes in order to bring the traveler back to a reduced skew. A brake release shall be provided. It shall be a hand operated valve that is held closed by a spring and must be depressed by the operator to be opened.

Equipment

All equipment shall be manufactured from material that is resistant to deterioration or corrosion in a marine environment or shall have a protective coating to provide such resistance. Seals and gasket material shall be suitable for air or non-corrosive gases and shall be resistant to deterioration in a marine environment and to hydrocarbons (air-entrained petroleum or vehicle exhaust).

Miscellaneous bolts, nuts, washers, fasteners, and springs otherwise unspecified shall be ~~18-8~~ type 304 stainless steel.

All equipment shall be capable of operating in a temperature range of ~~-6~~ 0º C to ~~95~~ 80º C or as approved by the Engineer and shall be rated for operation in a pressure range from 170 kPa gauge to 1,000 kPa gauge. (25 to 145 psig) unless otherwise noted. Operating pressure available at the air supply piping on the bridge may vary from 550 ~~490~~ kPa to 790 ~~620~~ kPa (80 to 115 psig). For the linear actuator air motors, pressure relief valves are to be supplied to prevent the application to the motors of pressures in excess of 690 kPa (100 psig) under any circumstances.

Traveler supplier is to verify that all components of the mechanical and pneumatic systems are compatible with each other and with the structural components.

Lubrication points shall be furnished with pressure type lubrication fittings. All bearings requiring greasing shall be equipped with grease fittings. Grease fittings shall all be one size and shall be located for easy access.

Codes

All work, including equipment, material and installation, shall conform to California Administrative Code, Title 8, Division of Industrial Safety.

The Contractor shall coordinate the supply of the quick disconnect fittings that are mounted on the bridge with those on the travelers.

Sole Source Supplier

The piston motor driven trolleys, the passive trolleys, and the brake trolleys shall be obtained from the following manufacturer:

VENDOR ADDRESS AND PHONE NUMBER
ELECT AIR ~~4385 EAST LOWELL STREET~~ 11897 CABERNET DRIVE, SUITE C ~~ONTARIO, CA 91761-2228~~ FONTANA, CA 92337 TEL: ~~909-390-0770~~ 951-685-1675 FAX: 800-390-0776

The unit prices quoted by the supplier for the trolley items are as follows:

ATET-MR3/D05065B	$16,101.98 each
BrkTrolley/D03003B	$5,882.87 each
BTP-MR~~3-6~~/D04028B	$3,772.93 each

The prices quoted are effective for all orders placed on or before 6/30/2006, provided delivery is accepted within ~~112~~ 180 days after the order is placed. The FOB location is Seattle, Washington. The above prices include freight~~,~~ and insurance to FOB location, technical advice, inspection by a qualified representative of the manufacturer during installation and a final inspection of the installed trolleys, but do not include taxes.
The total price will be increased 5% per year for each year thereafter through 2011, provided delivery is accepted within ~~112~~ 180 days after the order is placed.

The Ingersoll Rand Component Identification Codes listed in the Plans and Specifications describe the general category of components. The Specific and Final Part Identification Codes are established by Ingersoll Rand, in consultation with the Engineer so as to reflect the particular variances from standard components for this project.

Products

For the purposes of completing the detailing of the individual components of the travelers selection of specific mechanical equipment has been made. The products ~~is~~ and their component(s) are ~~is~~ named on the plans or in this specification.

The specific items named are suitable and acceptable for use on these travelers. The traveler supplier may substitute other items in place of the listed equipment provided that the strength and performance of the proposed substitution is at

least equal to the performance of the named item and that the durability of the substitution is at least equal to that of the named item.

Any such proposed substitutions shall be submitted to the Engineer with sufficient documentation to support their acceptance. The Engineer will determine the acceptability of the proposed substitution.

Should the substitution be found acceptable, the traveler supplier shall re-detail, at his expense, any components that require alteration as a result of this substitution.

A. Reversible Radial Piston Motor Driven Trolley ~~(motor trolley)~~- Piston motor driven trolley shall be Ingersoll-Rand series ATET –MR3/~~6~~D05065B air driven trolley or approved equivalent and shall be installed in accordance with the details shown on the plans. The drive wheels shall be connected to the air motor by means of a geared speed reducing power train.

Piston motor driven trolleys shall be rated by the manufacturer ~~to have a minimum Factor of Safety~~ as follows:

Rated Load ~~– 6000 kg @ 5:1 Factor of Safety~~ for "Man Rider" application – 3000kg with Minimum 10:1 Safety Factor.

The manufacturer shall certify that the trolleys are structurally capable of carrying ~~a~~ the Rated Load of ~~6000~~3000 kg with a Factor of Safety of at least ~~5.0~~ 10.0. ~~Note that the actual service loads on the trolleys are substantially less than the rated loads noted above.~~

The drive wheels shall be cast iron or ductile iron or surface hardened ~~mechanical~~ steel and shall have a ~~compound~~ tread shape suitable for operation on the lower flange of the 127 mm wide flat flange rail (bikepath wheels) ~~and~~or the 181 mm wide ~~taper~~ flat flange rail (other wheels) and shall provide adequate clearance from the splice plates and jumper assemblies.

The units shall have ~~the "~~a marine grade epoxy finish,~~" in accordance with these Special Provisions.~~

The air motor shall be 4 cylinder reversible, radial piston-type ~~having a remote control valve chest.~~ Crank pin and connecting rods shall be drop forged construction. Bearings and shafting shall have dust shields.

Starting, reversing and stopping of the traveler scaffold shall be accomplished by means of remotely controlled throttle installed as shown on the plans and specified herein.

Wheel treads shall be hardened. Wheel tread hardness shall be ~~275~~ a minimum of 269 BHN.

~~B. **Passive trolley** – Passive trolley shall be Ingersoll Rand – Model BTP-MR 316 or approved equivalent. Trolleys shall have cast iron, ductile iron or surface hardened steel wheels hardened to BHN 269 with compound treads for operation on flat and tapered flanges and shall be equipped with thrust ball or roller bearings in hardened races and with dust seals. Trolley wheels shall be suitable for operation on the lower flange of the traveler rails. Trolley wheels shall have a Rated Load of 1500 kg each with a 5:1 minimum Factor of Safety.~~
~~The assembled trolley shall have a Rated Load of 6000 kg with a minimum factor of safety of 5:1.~~
~~Note that the actual applied load is substantially less than the Rated Load.~~
~~Trolley shall have a marine grade epoxy finish.~~

~~C. **Brake trolleys** - Brake trolleys shall be as shown on the plans. Brake trolleys shall have cast iron, ductile iron or surface hardened steel wheels with compound treads and shall be equipped with thrust ball or roller bearings in hardened races and with dust seals. Trolley wheels shall be suitable for operation on the lower flange of the traveler rails. Trolley wheels shall have a Rated Load of 1500 kg each with a minimum Factor of Safety of 5:1.~~
~~Brake trolley shall have a marine grade epoxy finish.~~

~~D. **Air Actuated Safety parking brake** - The brakes shall be spring-actuated to set the brake full stop. Brake release shall be by air pressure. Each brake shoe shall be operated by a brake chamber.~~

~~The position of the fabric-lined brake shoe shall be controlled by means of an operating cylinder having a bore of approximately 152 mm diameter and a single acting spring loaded piston. Stroke shall be 50 mm minimum.~~
~~The brake shall be rated at 590 kg clamping force at 58 mm and 840 kg at 0 mm stroke. The brake shall set at 25 mm stroke. Brakes shall release to 0 mm stroke under 480 kPa air pressure.~~

~~Brake shoe shall provide a minimum holding capacity of 2.7 kN on galvanized rail with a minimum factor of safety of 1.33.~~
~~Under a condition of zero gauge air pressure, the safety parking brake shall be in the "on" position preventing movement of the travelers.~~

~~E. **Foot-operated Poppet Valve.** - The foot-operated poppet valve shall be a 3-way foot-operated, spring return, normally closed poppet valve. The valve shall have a bronze body and NPT National Pipe Thread ports and shall be suitable for the anticipated air flow at 860 kPa gauge minimum working pressure. Downstream side shall be at atmosphere when "off."~~

~~F. **Throttle control valve** - The throttle remote control valve shall be a lever operated disc or rotor type. Valve shall have mechanite body and National Pipe Thread ports and, when supplied with 690 kPa gauge inlet air, the valve shall be rated for the anticipated air flow capacity. Valve shall be suitable for at least 860 kPa working pressure.~~

~~G. **Compressed air piping** - Piping for air lines on the traveler shall be rigid pipe of the nominal size Imperial shown on the plans with flexible hose for no more than 750 mm connecting to the brakes and motors unless longer lengths of flexible hose are shown on the drawings.~~

~~H. **Ball valve** - Ball valves shall be Class 400 bronze body with bronze trim and threaded ends.~~

~~I. **Whistle** - Whistles shall be 38 mm bell diameter and produce 100 dB tone minimum at 690 kPa supplied air pressure.~~

~~J. **Whistle valve** - Whistle valve shall be a poppet valve, 2-way lever operated, normally closed type. The valve shall have brass steel body and NPT National Pipe Thread ports and, when supplied with 690 kPa gauge inlet air, the valve shall be rated for a flow capacity of 42 L/s, and shall be suitable for 1,000 kPa gauge minimum working pressure.~~

~~K. **Flexible Hose** – Flexible hose shall have a rubber core, 2 synthetic body plies and a weather and abrasion resistant cove. Hose shall have a minimum rated pressure of 2,000 kPa. All clamps, couplings, and other hardware used in conjunction with the hose shall be made of stainless steel and shall be rated for 2,000 kPa.~~

~~L. **Quick coupling** - Quick coupling shall be claw type, bronze body, with neoprene gasket. NPS threaded ends for pipe, and barb end for hose. This shall not apply to the quick disconnects specified in item V below.~~

~~M. **Pressure regulator assembly** - Pressure regulator assembly shall be combination type, with 50 micron filter element rating, automatic drain and plastic bowl, 0 kPa to 1,000 kPa pressure regulator with pressure gauge, and 500 ml lubricator. The filter and lubricator elements shall be similar in size and appearance and shall be supplied by the same manufacturer. A manual drain shall be supplied at the low point of the oil storage bowl. Port sizes for both elements shall be the line size.~~

~~N. **Pressure gages** - Pressure gages shall be included and shall be 50 mm dial type, Grade A, and National Pipe Thread back ported. Pressure gages shall have a range of 0 kPa to 1,350 kPa.~~

~~O. **Double check valve** - Double check valve shall be bronze body, NPT 1/2 inlets and NPT 1/2 outlet with a stainless steel ball. The valve shall be rated for at least 860 kPa operating pressure and shall be of the type used for truck braking systems.~~
~~The purpose of this valve is to supply pressure to the brake cylinders to release the brake when the foot operated poppet valve has been actuated and to vent the brake cylinders to atmosphere once the foot operated poppet valve is released.~~

~~P. **Compressed air piping** – Piping for on board air lines shall be Schedule 40 galvanized steel pipe conforming to ASTM Designation: A 53, Type S, Grade B. Fittings shall be extra heavy type, galvanized steel or malleable iron.~~

~~Q. **Dump (Quick Exhaust) Valve** - Dump valves are to be provided for each braking system to ensure quick operation of the brakes. Dump valve is to be pilot operated and spring loaded and suitable for quick exhausting of the brake cylinders.~~

B. **Passive trolley** – Passive trolley shall be Ingersoll Rand – Model BTP-MR~~3-6~~/D04028B or approved equivalent. Trolleys shall have cast iron, ductile iron or surface hardened steel wheels hardened to a minimum of BHN 269 with

a tread suitable for operation on flat flanges and shall be equipped with thrust ball or roller bearings in hardened races and with dust seals. Trolley wheels shall have a Rated Load capacity that is compatible with the rated load for the trolley. The assembled trolley shall have a Rated Load for "Man Rider" application of 3000 kg with a minimum factor of safety of 10.1.

Trolley shall have a marine grade epoxy finish.

C. **Brake trolleys -** Brake trolleys shall be Ingersoll Rand Brake Trolley Model BrkTrolley/D03003B incorporating a safety parking brake as described below. Brake trolleys shall have cast iron, ductile iron or surface hardened steel wheels with a tread suitable for operation on the lower flange of the traveler rail. The wheels shall be equipped with thrust ball or roller bearings in hardened races and with dust seals. Trolley wheels shall have a capacity that is compatible with the rated load for the trolley. The assembled trolley shall be certified by the manufacturer to have a Rated Load for "Man Rider" application of 3000 kg with a minimum factor of safety of 10:1. Brake trolley shall have a marine grade epoxy finish.

D. **"Dynamic brakes"** – The SAS and E2/E3 travelers have been detailed using a Twiflex model MX25-S air operated brake. This brake is known to be suitable and acceptable for this application. Should the fabricator wish to propose the use of other brakes that are equivalent both in function and durability, it shall be his responsibility to re-detail all elements affected by such a substitution. The brakes shall be suitable for operation on the lower flange of the traveler rail and shall provide adequate clearance from the splice plates, rail stops, and jumper assemblies. The brake caliper must be spring applied and retracted by pneumatic pressure. The caliper shall produce a minimum of 8.9 kN (2000 lbf) of force when spring applied. The caliper shall be capable of being fully retracted at a minimum applied pressure of 482.6 kPa (70 psi). Before installation the brake calipers shall be disassembled and all mating surfaces and shafts lubricated with a Molybdenum disulfide Lithium based multi-purpose grease. The dynamic brake units shall be finished as recommended by the manufacturer and approved by the Engineer.

E. **Air Actuated Safety parking brake -** The brakes on the Bikepath traveler shall be spring-actuated to set the brake full stop. Brake release shall be by air pressure. Each brake shoe shall be operated by a brake chamber.

Each brake shall provide a minimum holding capacity of 2.7 kN on galvanized rail with a minimum factor of safety of 1.33.

Under a condition of zero gauge air pressure, the safety parking brake shall be in the "on" position preventing movement of the traveler.

F. **Poppet Valves (Parts 2N, 2S, 3, and 5a on Sheet 1134S1R2 and Part 38 on Sheet 1135S1R1) -** The poppet valves for the main air systems shall be 3-way pilot operated, spring return, poppet valves. The valves shall have a brass or stainless steel body or as approved by the Engineer, NPT (National Pipe Thread) ports, and shall be suitable for the anticipated air flow at 620 to 790 kPa gauge (90 to 115 psig) working pressure. Valves shall be rated for at least 860 kPa operating pressure.

- The main system poppet valve (Item 3) shall be a normally closed valve. The valve shall vent the complete trolley motor air system to atmosphere when closed. The valve shall be controlled by foot-operated pilot valves.
- The skew control poppet valves (Items 2N and 2S) shall be normally open valves. The valves shall vent the trolley-side to atmosphere when closed.
- The elevating platform main air poppet valves (Item 38) shall be normally closed valves. The valves shall vent the motor-side to atmosphere when closed. The valves shall be activated by foot-controlled pilot valves.
- Trolley Air Lockout Valve (Item 5A) shall be a 3-way, normally open, pilot operated, port size ¼" valve.

G. **Throttle control valve** – The throttle control valve shall be proportional, shall be manually directly controlled and shall be suitable for the full airflow. The valve shall incorporate porting to control the release of the brakes. The valve shall also incorporate an emergency stop button. Ingersoll Rand control valves from the "Force Five" series winches are known to be suitable for this application. Other valves of equal performance and durability are acceptable. The valve shall have a brass or stainless steel body or as approved by the Engineer.

H. **Compressed air piping -** Piping for air lines on the traveler shall be schedule 40 galvanized steel pipe conforming to ASTM A53 Type S Grade B of the nominal size Imperial shown on the plans, with flexible hose for no more than 750 mm length connecting to the brakes and motors unless longer lengths of flexible hose are shown on the drawings. Fittings shall be extra heavy type, galvanized or malleable iron or as approved by the Engineer.

I. **Ball valve -** Ball valves shall be Class 400 brass or stainless steel body with brass trim and threaded ends unless otherwise specified or as approved by the Engineer.

J. **Whistle -** Whistles shall be 38 mm bell diameter and produce 100 dB tone minimum at 690 kPa supplied air pressure or as approved by the Engineer.

K. **Whistle valve -** Whistle valve shall be a poppet valve, 2-way lever operated, normally closed type. The valve shall have brass or stainless steel body or as approved by the Engineer, NPT National Pipe Thread ports, and, when supplied with 690 kPa gauge inlet air, the valve shall be rated for a flow capacity of 42 L/s, and shall be suitable for 1,000 kPa gauge minimum working pressure.

L. **Flexible Hose** – Flexible hose shall have a rubber core, 2 synthetic body plies and a weather and abrasion resistant cover. Hose shall have a minimum rated pressure of 2,000 kPa. All clamps, couplings, and other hardware used in conjunction with the hose shall be made of stainless steel and shall be rated for 2,000 kPa, or as approved by the Engineer.

M. **Quick coupling -** Quick coupling shall be claw type, brass or malleable iron or as approved by the Engineer, with neoprene gasket, NPT threaded ends for pipe, and barb end for hose. This shall not apply to the quick disconnects specified in item U below. Attention is directed to couplings specified in Section 10-4.02 "Pipe, Fittings and Valves". One adapter for each traveler shall be provided to convert one coupling to the other, with minimal hose or fittings between them.

N. **Filter, Pressure Regulator, and Lubricator.** The pressure regulator, lubricator and the filter shall be separate units. The pressure regulator with pressure gauge shall be capable of regulating pressure from 0 kPa to 1000 kPa. The lubricator shall have a nominal reservoir size of 1 liter (1 quart US) and have a screw-on bowl with a manual drain at the low point of the storage bowl. The filter shall have a 40 micron filter element rating with an automatic drain. All units shall have aluminum or die cast bowls or as approved by the Engineer. All units (regulator, lubricator, and filter) shall be supplied by the same manufacturer. Port sizes for all elements shall be the line size.

O. **Pressure gages -** Pressure gages shall be included and shall be 50 mm dial type, Grade A, and National Pipe Thread back ported. Pressure gages shall have a range of 0 kPa to 1,350 kPa.

P. **Double check valve (shuttle valve) -** Double check valve shall be brass or stainless steel body with a stainless steel ball, or as approved by the Engineer. The valve shall be rated for at least 860 kPa operating pressure.

The purpose of valve Item 6 is to supply pressure to the brake cylinders to release the brake when the foot operated poppet valve has been actuated and to vent the brake cylinders to atmosphere once the foot operated poppet valve is released.

The purpose of the valve Item 6A is to collect the signals from the two elevating platform limit switches (E2/E3 travelers only) so as shut off trolley air to prevent the trolley motors from operating if either one of the elevating platforms is above its parked (fully down) position

Q. **Dump (Quick Exhaust) Valve** - Dump valves are to be provided in the braking system to ensure quick operation of the brakes and also in the pilot circuits to ensure rapid dissipation of the pilot signals. Dump valves are to be pilot operated and spring loaded and suitable for quick exhausting. The valve shall be brass or stainless steel body or as approved by the Engineer.

R. **Linear Actuators** – Linear actuators shall be supplied by one of the following manufacturers, or equal:

VENDOR ADDRESS AND PHONE NUMBER
TEMPLETON KENLY SIMPLEX (A Division of Templeton Kenly) 2525 Gardner Road Broadview, IL 60155 Phone: 800-275-5225

Fax: 708-865-0894
NOOK INDUSTRIES, INC. 4950 East 49th Street Cleveland, Ohio 44125-1016 Phone: 216-271-7900 Fax: 216-271-7020
JOYCE-DAYTON CORP. P.O. Box 1630 Dayton, Ohio 45401 Phone: 937-294-6261 Fax: 937-297-7173

For the purposes of completing the detailing of all associated components, a specific selection has been made for linear actuators. The units selected are Templeton Kenly, Unilift, M Series screw actuators. The specific unit descriptions are shown on the plans. Substitutions of equivalent performance may be proposed for review by the Engineer. Should such substitution be accepted, the traveler supplier shall re-detail, at his expense any components affected by the substitutions. Ball screw actuators will not be accepted as a substitution due to potential backwards movement under load.
The actuator load screws and exposed shafts shall be steel that is electroplated as specified in these special provisions, that will withstand severe environmental exposure including salt-laden air.
The actuator screws for the M50 units shall be made from mechanical tubing to reduce weight.
Each actuator shall be supplied with a protective rubber boot as shown on the plans.
Actuators shall be marine grade epoxy coated.

S. **Actuator Drive Air Motors** - Actuator drive air motors shall be supplied by one of the following manufacturers, or equal

VENDOR ~~ADDRESS AND~~ PHONE NUMBER
~~Ingersoll-Rand~~ ~~Ingersoll-Rand Productivity Solutions Group~~ ~~510 Hester Drive~~ ~~Whitehouse TN 37188~~ ~~Phone: 800-866-5457~~ ~~Fax: 615-672-7678~~ INGERSOLL-RAND Phone: 800-866-5457
CooperTools ~~6500 West Sam Houston Parkway North, Suite 200~~ ~~Houston, TX 77041~~ Phone: 713-849-2364 Fax: ~~713-849-2647~~ 713-849-2047
PSI Automation ~~2113 Seabrook Circle~~ ~~Seabrook, TX 77586~~ Phone: 800-392-3602 Fax: ~~281-280-8795~~ 281-474-2557

For the purposes of completing the detailing of all associated components, a specific selection has been made for the drive motors for the linear actuators. The units selected are Ingersoll Rand units. The specific model numbers are as shown on the plans.
Substitution of units with equivalent performance and durability may be proposed for review by the Engineer.
Should such substitutions be accepted, the traveler supplier shall re-detail, at his expense, all affected components.
Substitute air motors shall have starting, running and stall torque values within 10% of the values for the selected motors within the pressure range of 490 to 690 kPa.
The maximum force in the actuators at stall out of the motors must not exceed the current value by more the 10%.
The motor starting torque available at 490 kPa air pressure shall be sufficient to extend the proposed actuators under the following axial compressive loads:

Type	Axial Compressive Load
ACT 03, 04, 05, and 06 (M50)	40.0 kN, min
ACT 01 and 02 (M30)	31.5 kN, min

The ultimate column buckling strength of the proposed actuators shall meet or exceed the following values:

Unit Type	Unsupported Length, min	Ultimate Column Buckling Load
M30	3581 mm	176 kN
M50	4583 mm	170 kN

Ultimate column buckling load = (1.5 x dead load) + (10 x live load)

Drive motors shall be marine grade epoxy coated.

T. **Couplings and Shafts** - Couplings and shafts shall be of the type shown on the plans and shall be rated for the torque values shown on the plans. The finish shall be as recommended by the manufacturer and approved by the Engineer.

U. **Quick Disconnect Couplings** - The description applies only to the quick disconnect couplings that are used on the E2/E3 travelers to change suspension systems at Hinge A. Quick disconnect couplings shall be used unless otherwise approved by the Engineer.

The purpose of these couplings is to allow disconnection of the air supply to either trolley train as the suspension is changed from SAS rails to Skyway Rails.

The requirements are shown schematically on the plans.

The manufacturer is to propose a style and model of disconnect coupling that is suitable for this use, that can be disconnected and re-connected without the use of tools and that will close off the disconnected hose ends such that full operating air pressure can be applied against the disconnected free ends.

V. **Limit Switch Valves** - The valves controlling the response to excessive skew and the valves to sense when the elevating platforms are fully down (limit switch valves) shall be mechanically activated spool valves, 3/2 function, ¼" NPT ports with roller lever activation and spring return, Norgren 03-0611-22, or equivalent, as approved by the Engineer.

W. **3-Way Manual Diversion Ball valve –** 3-Way Manual Diversion Ball valve shall be provided with SS Latch-Lock Lever and Nut. It shall have bronze or stainless steel body with a stainless steel ball and stem or as approved by the Engineer. The valve shall be rated for at least 2000 KPa operating pressure.

The purpose of this valve is to allow maintenance personnel to release the downline pressure, and lock the ball valve in the closed position, to prevent accidental operation of the system, while the system is in repair mode

X. **In Line Lubricators at Motors.** The lubricator shall have a nominal reservoir size of 0.5 liter (0.5 quart US) and have an aluminum or die-cast screw-on bowl or as approved by the Engineer with a manual drain at the low point of the storage bowl. The lubricator shall have a metering device to adjust the amount of lubricant introduced into the air line.

Y. **Pedal Operated Deadman Valve (Items 5 and 40).** Valve 5 is a ¼" NPT, 4 way, 5 ported, 2 position, pedal operated, spring return pneumatic valve. The pedal must be depressed to activate valve 3 to supply main system air to the throttle control valve. 2 valves are supplied in the circuit to allow the traveler operator to face the direction of travel so desired. The valve shall have a brass or stainless steel body or as approved by the Engineer.

OPERATION

Each traveler shall be equipped with ~~two~~ one control station~~s~~ mounted in the position shown on the plans. The control station~~s~~ shall ~~be~~ incorporate a watertight and corrosion resistant enclosure for the controls.

Manually operated proportional control throttle valves shall be provided, one to control each side of the traveler. The throttle controls for the traveler trollies and the linear actuator motors shall be equipped with deadman controls, which interrupt~~s~~ ~~for controls~~ the air flow when the operator becomes incapacitated or cannot continue to operate the controls.

The main air supply to all functions shall be controlled by a normally closed main system valve actuated by a deadman control. This deadman control shall be ~~knee or~~ foot operated. ~~Manually operated proportional control throttle valves shall be provided, one to control each side of the traveler.~~

When the distribution piping is connected to the bridge air system nominal (nominal 690 kPa gauge, 490 kPa gauge minimum), a single operator shall be able to operate the traveler by depressing the foot valve and moving the two hand throttles from the neutral position. The following shall be the sequence of operation for the traveler trolley motors:

A. The foot-operated ~~poppet~~ pilot valve is depressed activating the main system valve.
B. Air is transmitted to ~~release the brake and~~ provide air to the throttle valves.
C. The hand controls of the throttle valves are moved to the desired port alignment to allow air flow to the motors and to release the brakes. Flow to the motors shall be proportional to hand control movement.
D. When the throttle and control handle is returned to the neutral position air supply to the motors is cut off and the motors stop. Air to the brake release is also interrupted and the quick dump valves will exhaust the brake air thereby setting the brakes. The control handle shall return automatically to the neutral position when released.
E. When the foot valve is released, all air ~~to the brake and throttle valve~~ is cut off, causing the spring-loaded brakes to set and the throttle valve to become inoperative. The foot valve is a dead man safety control~~, which causes the brake to set whenever the pedal is released~~.
F. Limit switches at each elevating platform will produce a signal that interrupts the air supply to the trolley motors if either of the elevating platforms is raised above its parked (fully down) position. The traveler cannot move unless the platforms are down.

SUBMITTALS

Working Drawings

The Contractor shall submit working drawings to the Engineer for approval in accordance with the provisions in "Working Drawings," of these special provisions.

The Contractor shall allow 50 days for the review by the Engineer after complete drawings and all supplemental data, including calculations and calculated weights, are submitted. Fabrication shall not commence until the Engineer's approval is received.

The working drawings shall contain all information required for the quality control and proper construction of maintenance travelers.

Working drawings shall include the following:

A. Complete details, material specifications and schedules for fabrication and shop assemblies. Complete details shall include, but not be limited to, all components, materials, and methods to support, propel, and brake the travelers.
B. Details showing the fit and assembly of all steel and other elements required to complete the work.
C. Complete piping and control diagrams showing interconnection of all pneumatic apparatus and equipment.

Calculations for all mechanical components and/or systems designed or detailed by the fabricator, and also the associated working drawings, shall be stamped and signed by an engineer who is registered as a Mechanical Engineer in the State of California.

The Contractor shall verify space availability, fit-up and compatibility for any and all component equipment and apparatus to be installed.

The Contractor shall confirm all dimensionings, clearances and fit of the travelers to the permanent structure. Any conflicts shall be brought to the attention of the Engineer for resolution.

Product data

A list of materials and equipment to be installed, manufacturer's descriptive data, and such other data as may be requested by the Engineer shall be submitted for approval prior to purchase and fabrication.

Manufacturer's descriptive data shall include complete description, performance data and installation instructions for the materials and equipment specified herein.

The Contractor shall submit manufacturer's descriptive data to the Engineer for approval.
The Contractor shall allow 10 weeks for the review by the Engineer after all data are submitted.

Operation and Maintenance Manuals

Prior to the completion of the contract, 5 ~~identified~~ identical copies of the operation and maintenance instructions (with parts lists) shall be delivered to the Engineer. The instructions and parts lists shall be in a bound manual form and shall be complete and adequate for the equipment installed. Inadequate or incomplete material will be returned. The Contractor shall resubmit adequate and complete manuals at no expense to the State.

Manuals shall include, but not be limited to, the following:

A. Index
B. Vendor names, addresses and telephone numbers
C. Manufacturer's published literature describing equipment capacity and function
D. Complete operating and maintenance instructions with exploded views of assemblies and step by step sequence of assembly and disassembly.
E. Complete nomenclature of all parts, part numbers and current cost
F. Copies of all guarantees and warranties
G. Copies of approved shop drawings
H. Copies of "as-built" drawings
I. Copies of approved catalog cuts
J. Complete lubrication chart indicating location, type and frequency of lubrication
K. Trouble shooting information
L. Preventative maintenance requirements

Spare Parts

The Contractors shall supply the following items as spare parts. These shall be delivered to a location to be specified by the owner.

- 2 - piston motor driven powered trolleys
- 1 - passive trolley (complete)
- ~~4~~ 24- brake actuator cylinders for the brake trolleys on the bikepath traveler.

- 100% extra quantity of brake pads for each traveler outfitted with Twiflex "dynamic" brakes
- 8 - trolley wheels for the powered trollies
- 2 – trolley wheels for the passive trollies
- 100 % extra quantity of nylon bearing for the large traveler (E2/E3 and SAS) suspension arms
- 4 – Twiflex caliper brake units complete
- ~~100% extra quantity of nylon bearings for sliding rail connections for traveler rails crossing the Hinge A joint.~~
- ~~10% extra quantity of 6.4 and 9.5 mm thick teflon pads for sliding rail connections~~
- 4 - extra throttle valves for control of the air powered trolleys and the linear actuator motors
- 2~~1~~ - extra air motors for operation of the linear actuators (one of each type)
- 10% extra, (minimum quantity 2) – of every other pneumatic circuit component
- 1 - extra M50 actuator unit without load screw
- 1 - extra M30 actuator unit without load screw
- 100% extra quantity of the assembly pins for the large traveler suspension systems
- 20% spares for the skew control and elevating platform limit switch valves

Supply Only Items

The following items are to be supplied which are not specifically shown on the plans.

A. Two – 10 ton capacity chain falls for each of the E2/E3 travelers – total 4

B. A steel tool and storage box 1 m x 0.8 m x 0.8 m for each of the 5 travelers~~.~~, to be left on the traveler.

Trolley Units and Actuator

The steel used for the support wheels, gears, axles, bushings, and other appurtenances shall be specified by the respective manufacturer or Contractor. Wheels shall be either cast or forged. The steel classification and specifications shall be submitted to the Engineer for approval prior to purchasing and fabrication.

All components of the mechanical and pneumatic systems supplied shall be ~~designed to be~~ compatible with each other and with the structural components.

MEASUREMENT AND PAYMENT

Maintenance travelers, of the types shown on the Engineer's Estimate, will be measured and paid for on a lump sum basis.

The contract lump sum price paid for maintenance travelers of the types listed in the Engineer's Estimate shall include full compensation for furnishing all labor, materials, tools, equipment and incidentals, and for doing all the work involved in the maintenance travelers, complete in place, including, but not limited to, detailing, mechanical component selection, assembly, erection, shop and field testing, and operator instruction, as shown on the plans, as specified in the Standard Specifications and these special provisions, and as directed by the Engineer.

REGISTERED PROFESSIONAL ENGINEER
MARWAN N. NADER
No. C 054426
Exp. 12/11
CIVIL
STATE OF CALIFORNIA

STATE OF CALIFORNIA - DEPARTMENT OF TRANSPORTATION

CONTRACT CHANGE ORDER MEMORANDUM

TO: Pete Siegenthaler, Prin TE /	FILE: E.A. 04 - 0120F4
FROM: Kannu Balan, Senior TE	CO-RTE-PM SF-80-13.2/13.9
	FED. NO.
CCO#: 24 SUPPLEMENT#: 1 Category Code: CHPK	CONTINGENCY BALANCE (incl. this change) $171,531,330.81
COST: $3,703,527.54 INCREASE ☑ DECREASE ☐	HEADQUARTERS APPROVAL REQUIRED? ☑ YES ☐ NO
SUPPLEMENTAL FUNDS PROVIDED: $0.00	IS THIS REQUEST IN ACCORDANCE WITH ENVIRONMENTAL DOCUMENTS? ☑ YES ☐ NO
CCO DESCRIPTION: Traveler Modifications	**PROJECT DESCRIPTION:** CONSTRUCT SELF-ANCHORED SUSPENSION BRIDGE

Original Contract Time:	Time Adj. This Change:	Previously Approved CCO Time Adjustments:	Percentage Time Adjusted: (including this change)	Total # of Unreconciled Deferred Time CCO(s): (including this change)
2490 Day(s)	DEF Day(s)	501 Day(s)	20 %	3

THIS CHANGE ORDER PROVIDES FOR:

1. Redesign of the maintenance traveler system components, providing test track, and performance testing of the travelers. Traveler system changes consist of modifying; trolleys, paint and protective coatings, pneumatics, stair risers, suspension arms, connection welds, and sump buckets, and also providing an anti-skew and dynamic brake system. Testing of two of the travelers will be performed on a test track, prior to shipping and installation.

2. Revising Special Provisions Section 10-1.63 "TRAVELER SCAFFOLDS."

3. Revising Special Provisions Section 10-1.64 "TRAVELER SUPPORT RAILS."

Many of these changes were initially prepared and proposed for incorporation into the contract bid documents as part of Addendum No. 8 on January 31, 2006 and were intended to supplement changes made by Addendum No. 6 which had already been incorporated into the bid documents. The Toll Bridge Project Oversight Committee (TBPOC) subsequently directed that Addendum No. 8 not be issued and that these (and other) changes instead be incorporated into the Contract by change order after Contract Award. This change order incorporates details proposed in the resulting Design Change Request ("CR") Nos. 8 and 13 as well as subsequently identified traveler design clarifications and RFI's.

Reasons for the key element changes in this change order include:
· Motorized and passive trolleys are modified as a result of changes to the braking system.
· The original coating specification of the trolleys is modified to keep the manufacturer recommended coating as it exceeds the Department's requirements. The material and coating specifications for the pneumatic components are clarified to reflect design assumptions and service life requirements. The traveler framing paint requirement is clarified to match the rest of the bridge and the Skyway bridge travelers.
· The pneumatic control system is revised to incorporate the anti-skew system, revised trolley and brake configuration, and elevating platform operational requirements. Component specifications are revised to match components shown on the contract plans.
· Various structural modifications to elements such as stair risers, suspension arms, connection welds, and sump buckets are made to address conflicts and provide safe operation of the traveler.
· Anti-skew devices and dynamic brake systems are required to be added to the travelers to mitigate operational and safety concerns, pursuant to lessons learned on other Toll Bridge contracts.
· The Contractor will build a temporary test track and conduct performance tests to proof test the traveler systems before incorporation into the work.
· Specifications for sliding bearings in the traveler rail supports were relocated in the Special Provisions to clarify that they apply to the traveler rail and not the traveler.

This change order includes resolutions for Contractor Request for Information (RFI) Nos. 226R1, 1050R0, 1066R0, 1112R0, 1112R1, 1598R0, 1599R0, 1713R0, 1763R0, 1918R0, 1944R0, 1946R0, 1950R0, 1953R0, 1955R0, 1968R0, 1969R0, 1970R0, 1971R0, 1972R0, 2117R0, 2123R0, 2126R0, 2127R0, 2140R0, 2151R0, 2155R0, 2164R0, and 2190R0.

The change work is to be paid as an adjustment of compensation at lump sum. Elements of the testing are to be paid as extra work at force account. This supplemental change is estimated to total $3,703,527.54, which can be financed from the contingency fund. This will result in a cumulative amount of $5,236,084.65 for CCO 24S0 and 24S1. A detailed cost estimate is on file.

ADA Notice: For individuals with sensory disabilities, this document is available in alternate formats. For information call: (916) 654-6410 or TDD (916) 654-3880 or write Records and Forms Management, 1120 N Street, MS-89, Sacramento, CA 95814.

As the travelers are mounted under the bridge, the work will not affect the Seismic Safety Opening of the bridge, but installation and testing of the travelers can potentially impact the early Contract Completion date. Consideration of a time adjustment will be deferred until completion of the work specified herein. Determination of a commensurate time adjustment will be made in accordance with Section 10-1.13, "PROGRESS SCHEDULE (CRITICAL PATH METHOD)" and Section 10-1.14, "TIME-RELATED OVERHEAD" of the Special Provisions, as well as Section 8-1.07, "LIQUIDATED DAMAGES", of the Standard Specifications.

This change order has concurrence from Peter Siegenthaler (Principal Engineer), William Casey (Structure Rep.), Rich Foley (HQ Liaison), Wenyi Long (Design Oversight), Lina Ellis (Maintenance), and Ken Terpstra (Project Manager).

This change order will be presented to the Toll Bridge Program Oversight Committee (TBPOC) in February 2011 for their approval.

The Resident Engineer requests Headquarters CCO Desk "Issue and Approve".

CONCURRED BY:			
Construction Engineer:	PCE, Pete Siegenthaler, Prin TE	Date	9/1/09
Bridge Engineer:	Struct Rep, Bill Casey, Sup TE	Date	2/8/11
Project Engineer:	CT Oversight, Wenyi Long, P.E.	Date	9/1/09
Project Manager:	Proj Manager, Ken Terpstra	Date	9/1/09
FHWA Rep.:		Date	
Environmental:		Date	
Other (specify):	HQ, Rich Foley	Date	9/1/09
Other (specify):	Struct. Maint, Lina Ellis	Date	9/9/09
District Prior Approval By:		Date	
HQ (Issue Approve) By:		Date	
Resident Engineer's Signature:		Date	
		2-9-2011	

ESTIMATE OF COST

	THIS REQUEST	TOTAL TO DATE
ITEMS	$0.00	($487,676.00)
FORCE ACCOUNT	$1,000,000.00	$1,950,000.00
AGREED PRICE	$0.00	$170,485.40
ADJUSTMENT	$2,703,527.54	$3,603,275.25
TOTAL	$3,703,527.54	$5,236,084.65

FEDERAL PARTICIPATION

☐ PARTICIPATING ☐ PARTICIPATING IN PART ☑ NONE
☐ NON-PARTICIPATING (MAINTENANCE) ☐ NON-PARTICIPATING

FEDERAL SEGREGATION (if more than one Funding Source or P.I.P. type)
☐ CCO FUNDED PER CONTRACT ☐ CCO FUNDED AS FOLLOWS

FEDERAL FUNDING SOURCE PERCENT

ADA Notice: For individuals with sensory disabilities, this document is available in alternate formats. For information call: (916) 654-6410 or TDD (916) 654-3880 or write Records and Forms Management, 1120 N Street, MS-89, Sacramento, CA 95814.

DIST.	COUNTY	ROUTE	KILOMETER POST TOTAL PROJECT	SHEET NO.	TOTAL SHEETS
04	SF	80	13.2/13.9	1007R2	1204

REGISTERED ENGINEER - CIVIL

12-6-04
PLANS APPROVAL DATE

Marwan N. Nader No. C 054426 Exp. 12/31/09 CIVIL STATE OF CALIFORNIA

The State of California or its officers or agents shall not be responsible for the accuracy or completeness of electronic copies of this plan sheet.

T.Y. LIN / MOFFATT & NICHOL
825 BATTERY STREET
SAN FRANCISCO, CA 94111

Caltrans now has a web site! To get to the web site, go to http://www.dot.ca.gov

A. Traveler General Notes:

A1. The following notes apply only to the five Maintenance Travelers. The notes do not apply to any other portion of the work.

A2. Abbreviations used in these drawings:

c/w ---- complete with	Nom ---- nominal
Ext ---- exterior	OF ----- outside face
Int ---- interior	Ref ---- reference
IF ----- inside face	Stiff -- stiffener
i/i ---- inside face to inside face	UNO ---- unless noted otherwise
Max ---- maximum	u/s ---- under side
Min ---- minimum or minutes	WP ----- workpoint

A3. Fabricator is to co-ordinate all dimensions with the permanent structure and is to detail to ensure proper fit, clearances and functionality.

A4. Fabricator to weigh each completed traveler before it is installed on the bridge.

A5. Component weights shown are anticipated lifting weights for the various components. Fabricator to verify all weights.

A6. All material, except items made of stainless steel are to receive paint as per specifications, unless otherwise noted on the drawings or in the specifications. Do not paint stainless steel. 2

A7. Fabricator may propose substitutions to the materials and details shown. All revisions and/or substitutions are subject to approval by the Engineer.

A8. Representatives of the Owner, or his designates, may make periodic visits to the fabricator's shop during the course of fabrication to review the work for general conformance to the design intent. Quality control will remain the responsibility of the fabricator notwithstanding these periodic inspections.

A9. The fabricator's welding engineer is to be available to review and discuss the welding requirements for the significant structural welds in these structures.

B. Traveler Design Notes:

B1. Platform is designed in accordance with Caltran's "Design and Inspection Requirements for Traveling Scaffolds". Revised May 1991.

B2. Design live load:

Any Area < 30 m^2 - 1.2 kPa UDL
Areas > 30 m^2 - 0.72 kPa UDL

Plus • 1.10 kN on 300x300 footprint, or
• 4.40 kN moving concentrated load

Live load allowance includes the weight of 2 - 55 gallon drums of material having a density of 15 kN/m^3

B3. Total allowable live load on the platform is shown on each specific platform assembly drawing.

B4. Platforms are designed for 0.72 kPa wind load on the projected surface of the containment membrane. (Sum of pressure force plus suction force).

B5. Whenever platform is used with full containment membrane, the membrane is to be fastened such that it will break away from its attachments at a wind pressure not to exceed 0.72 kPa (15 psf).

B6. No additional weight or load allowance has been made for accumulation of sandblasting sand or other materials on the platform.

2 REVISION 2 SUPERSEDES REVISION 1

CONTRACT CHANGE ORDER NO. 2451
SHEET 19 OF 120

REQUESTS FOR INFORMATION NOT ADDRESSED IN THIS CCO REMAIN IN FORCE

C. Traveler Materials Notes:

C1. Pipe and Mechanical Tube
a) All pipe sections to be ASTM A53B or approved alternate, Fy=240 MPa minimum, unless noted otherwise.
b) Mechanical tube to be of material & grade as noted on the specific drawings. Fabricator may propose substitutions.

C2. Rolled Sections
a) TS and structural tube sections to be ASTM A500 grade C, with Fy=345 MPa for shaped sections & Fy=317 MPa for round sections, unless noted otherwise.
b) Angles and channels to be ASTM A572 Grade 42 (Fy=285 MPa), unless noted otherwise.
c) All other rolled sections to be ASTM A572 Grade 50 (Fy=345 MPa), unless noted otherwise.
d) Traveler rail sections to be ASTM A572 or A709 Grade 50 (Fy = 345 MPa) unless noted otherwise.

C3. Plate
a) All plate to be ASTM A572 or A709 Grade 50, Fy=345 unless noted otherwise.

C4. Screw Parts (Threaded Parts) 2
a) As noted on the specific drawings. Fabricator is to supply mill certificates, mechanical test results, chemical composition & Charpy test results for material used in any of the screw parts apart from standard bolts. Minimum Charpy value for screw parts is to be 20 joules at 0°c. Minimum elongation at rupture in 51 mm gage to be 15%.

C5. Pins
a) Material to be as noted on the drawings.
b) The fabricator is to provide mill certificates for the materials used in the fabrication of all pins.

C6. Bolts
a) All bolts to be ASTM grade A325, unless noted otherwise.
b) Fabricator is to supply a nut and one hardened washer with each bolt unless noted otherwise.
c) All bolts, nuts, & washers are to be galvanized.
d) All bolts shall be imperial (inch)size. These are designated as follows:
- 16 Dia = 5/8 inch - 25 Dia = 1 inch
- 19 Dia = 3/4 inch - 28.5 Dia = 1 1/8 inch
- 22 Dia = 7/8 inch - 38 Dia = 1 1/2 inch

C7. Nylon parts to be Nylon 101, unfilled, Type 66 Nylon, see specifications.

C8. All plywood to be Marine plywood, to be 19 mm thick, and conform to NIST Voluntary Product Standard PS-1 for Marine Special Exterior Grade A-B.

C9. UHMWPE denotes "ultra high molecular weight polyethylene".

2 C10. Self tapping screws (#14 size), shall be used to connect plywood deck to steel structure. Spacing shall be 300 mm maximum along edges of plywood and 600 mm maximum along intermediate supports. See specifications. Note - self tapping screws are not permitted to penetrate tube members. 2

C11. All slotted nuts are to be ANSI Heavy Hex slotted nuts and are to be supplied with stainless steel cotter pins of the diameter called on the drawings.

C12. Shackles, turnbuckless and other rigging hardware are called on these drawings using Crosby part numbers so as to be clear about the specific sizes etc, assumed in sizing and spacing of components. Other material of equal strength is permitted. Contractor to make all adaptations necessary as a result of such substitutions.

2 C13. Stainless Steel - All stainless steel to be Type 316, annealed condition with Fy= 205 MPa Min.

ALL DIMENSIONS ARE IN MILLIMETERS UNLESS OTHERWISE SHOWN

MARK	DATE	DESCRIPTIONS	BY	CH'D	CCO#
2	08/21/09	TRAVELER MODIFICATIONS	MN	AS	2451
1	07/20/07	RAIL CHANGE & MISCELLANEOUS DETAILS	MN	NV	24

REVISIONS

R. Vaiizadeh/V. Toan/Y.L./W.L./F.C.
DESIGN OVERSIGHT
Roya Vaiizadeh / Vang Toan / Y. Liu
SIGN OFF DATE 08/21/09

DESIGN BY J. Otter CHECKED M. Nader
DETAILS BY J. Otter CHECKED N. Vo
QUANTITIES BY J. Otter CHECKED J. Leventini

PREPARED FOR THE STATE OF CALIFORNIA DEPARTMENT OF TRANSPORTATION

R. Manzanarez
PROJECT ENGINEER

BRIDGE NO. 34-0006L/R
KILOMETER POST 13.2/13.9

SAN FRANCISCO OAKLAND BAY BRIDGE
EAST SPAN SEISMIC SAFETY PROJECT
SELF-ANCHORED SUSPENSION BRIDGE
(SUPERSTRUCTURE & TOWER)

TRAVELERS-GENERAL NOTES NO. 1

Rev. Date: 5-18-98

ORIGINAL SCALE IN MILLIMETERS FOR REDUCED PLANS 0 10 20 30 40 50 60 70 80 90 100

CU 04
EA 0120F1

DISREGARD PRINTS BEARING EARLIER REVISION DATES

REVISION DATES (PRELIMINARY STAGE ONLY) 04/20/02 04/29/02 07/24/02 12/19/02

SHEET 590R2 OF

FILE => I:\bb\04-01200\sas\contract plans and cco\cco\cco#2451\3-revision 08-21-09\dgn\aktrv002.dgn

100 % PS&E

USERNAME => arivera DATE PLOTTED => 21 AUG 2009 TIME PLOTTED => 14:38:48

DIST.	COUNTY	ROUTE	KILOMETER POST TOTAL PROJECT	SHEET NO.	TOTAL SHEETS
04	SF	80	13.2/13.9	1008R3	1204

REGISTERED ENGINEER - CIVIL

12-6-04
PLANS APPROVAL DATE

REGISTERED PROFESSIONAL ENGINEER Marwan N. Nader No. C 054426 Exp. 12/31/11 CIVIL STATE OF CALIFORNIA

The State of California or its officers or agents shall not be responsible for the accuracy or completeness of electronic copies of this plan sheet.

T.Y. LIN / MOFFATT & NICHOL
825 BATTERY STREET
SAN FRANCISCO, CA 94111

Caltrans now has a web site! To get to the web site, go to: http://www.dot.ca.gov

D. Traveler Fabrication & Detailing Notes:

D1. Unless noted otherwise: ten percent (10%) of all CJP welds shall be ultrasonically tested & 10% of any other welds specifically designated NDT shall be magnetic particle tested.

D2. NDT X% denotes that the weld indicated is to be NDT tested at the rate of X% using ultrasonic testing for CJP welds and magnetic particle testing for other welds.

D3. All weld testing to be in accordance with project Specifications unless noted otherwise.

D4. Weld Designation Notes

- denotes flush filled flare bevel weld with effective throat thickness of T=5/8 t see Detail A
- D — denotes fillet weld leg size D (mm)
- (a) PJP — denotes partial joint penetration side weld with weld size of a (mm)
- (a%) PJP — denotes partial joint penetration weld with weld size of a% of material thickness
- CJP — denotes complete joint penetration weld
- T — denotes combination flare bevel and fillet weld. Flare bevel is flush fillet. Fillet weld size is T (mm)
- D — denotes fillet weld each side, with both sides having equal leg sizes D mm

3 D5. Any fillet or square weld not dimensioned is to be 3 mm seal weld up to a material thickness of 5 mm, and 5 mm seal weld for material thickness in excess of 5 mm.

D6. All connections to be seal welded all around whether specifically called for or not on the details.

D7. Bolt threads to be excluded from the shear plane of all connections unless noted otherwise

D8. These Travelers have been detailed using plate thicknesses as conventionally supplied in US customary units (inches). The Metric designation of the thickness is the following:

- 6.4 mm = 1/4"	- 25 mm = 1"
- 8 mm = 5/16"	- 32 mm = 1 1/4"
- 9.5 mm = 3/8"	- 38 mm = 1 1/2"
- 12.7 mm = 1/2"	- 44 mm = 1 3/4"
- 16 mm = 5/8"	- 51 mm = 2"
- 19 mm = 3/4"	
- 22 mm = 7/8"	

D9. Vertical dimensions from top of girder to U/S rail are given for information only. For traveler rail detailing dimensions, see "Traveler Rail Details" sheets.

2 REVISION 2 SUPERSEDES REVISION 1

CONTRACT CHANGE ORDER NO. 2451
SHEET 20 OF 120

REQUESTS FOR INFORMATION NOT ADDRESSED IN THIS CCO REMAIN IN FORCE

MARK	DATE	DESCRIPTIONS	BY	CH'D	CCO#
3	02/12/10	TRAVELER MODIFICATIONS	MN	AS	2451
2	06/19/09	TRAVELER MODIFICATIONS	MN	AS	2451
1	07/20/07	RAIL CHANGE & MISCELLANEOUS DETAILS	MN	NV	24

REVISIONS

E. Traveler Containment Membrane Requirements

E1. Containment membrane is required for paint work and water cleaning only.

E2. Do not install containment membrane at other times.

E3. Containment membrane to be reinforced plastic tarpaulin material.

E4. Containment membrane to be fastened to the structure and to the traveler with magnets.

E5. Fastenings to be such that most of the anchors will detach (break away) at wind load of 0.5 kPA (Min), 0.72 kPa (Max), so as to shed any higher wind forces.

E6. Membrane to be firmly attached so that it will remain attached to the traveler after breakaway.

E7. Detailed design of the membrane to meet these requirements is to be carried out by others.

E8. When containment membrane is installed, cable guys are required as shown on each Traveler Assembly Drawing.

E9. When containment membrane is in use on the four large travelers, a minimum of 5 of the 8 caliper brakes on each rail are to be "on" when significant wind loads are anticipated. 2

F. Traveler Erection Notes

F1. Rail beams are to be fastened to the structure only after full dead load is applied to the structure. This is to minimize the stress range that the rails will see in service.

F2. Travelers can be lifted either at their primary suspension points or at the secondary support locations. Should the fabricator wish to lift these units from other locations the fabricator is to be responsible for such lifts and is to make all computations and other provisions necessary to achieve this in a safe manner.

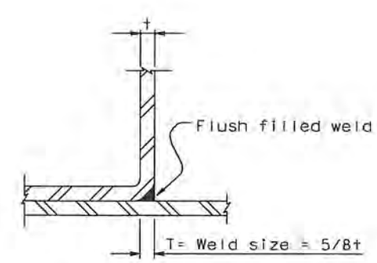

DETAIL A
(Flare bevel weld)

ALL DIMENSIONS ARE IN MILLIMETERS UNLESS OTHERWISE SHOWN

R. Vaziadeh/V. Toan/Y.L./W.L./F.C.
DESIGN OVERSIGHT
SIGN OFF DATE 02/12/10

	BY	CHECKED
DESIGN	J. Otter	M. Nader
DETAILS	J. Otter	N. Vo
QUANTITIES	J. Otter	J. Leventini

PREPARED FOR THE STATE OF CALIFORNIA DEPARTMENT OF TRANSPORTATION

R. Manzanarez
PROJECT ENGINEER

BRIDGE NO. 34-0006L/R
KILOMETER POST 13.2/13.9

SAN FRANCISCO OAKLAND BAY BRIDGE
EAST SPAN SEISMIC SAFETY PROJECT
SELF-ANCHORED SUSPENSION BRIDGE
(SUPERSTRUCTURE & TOWER)

TRAVELERS-GENERAL NOTES NO. 2

Rev. Date: 5-18-98

ORIGINAL SCALE IN MILLIMETERS FOR REDUCED PLANS 0 10 20 30 40 50 60 70 80 90 100

CU 04
EA 0120F1

DISREGARD PRINTS BEARING EARLIER REVISION DATES

REVISION DATES (PRELIMINARY STAGE ONLY) 01/20/02 01/25/02 07/20/02 12/19/02

SHEET 591R3 OF

FILE => I:\bb\04-012001\sas\contract plans and cco\cco\cco#2451\5-revision 02-12-10\dgn\aktrv003.dgn

100 % PS&E

USERNAME => arivera DATE PLOTTED => 19 FEB 2010 TIME PLOTTED => 08:53:06

DIST.	COUNTY	ROUTE	KILOMETER POST TOTAL PROJECT	SHEET NO.	TOTAL SHEETS
04	SF	80	13.2/13.9	1011R4	1204

REGISTERED ENGINEER - CIVIL

12-6-04
PLANS APPROVAL DATE

Marwan N. Nader
No. C 054426
Exp. 12/31/09
CIVIL
STATE OF CALIFORNIA

The State of California or its officers or agents shall not be responsible for the accuracy or completeness of electronic copies of this plan sheet.

T.Y. LIN / MOFFATT & NICHOL
825 BATTERY STREET
SAN FRANCISCO, CA 94111

Caltrans now has a web site! To get to the web site, go to http://www.dot.ca.gov

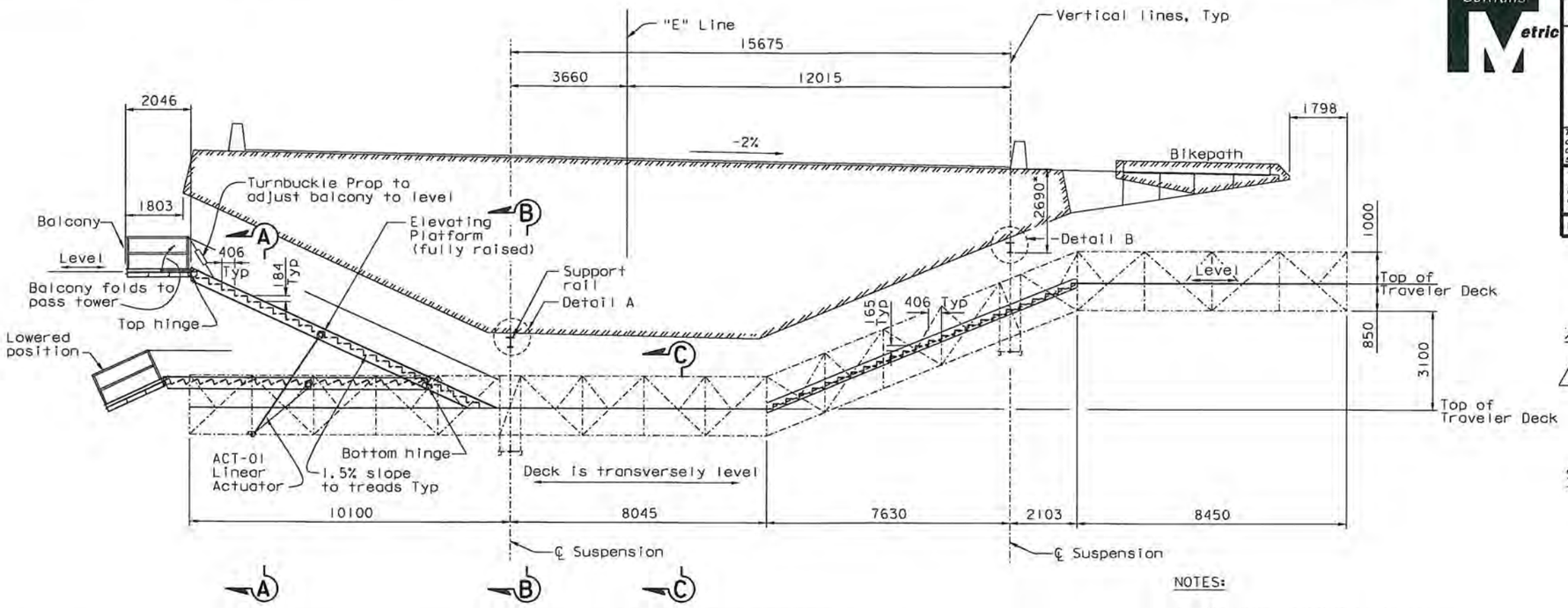

SAS-EB TRAVELER

CONTROLLING DIMENSIONS AT TYP SECTION

1:80

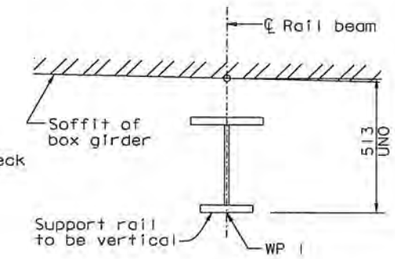

WP 1 Definition

DETAIL A

1:10

NOTES:

1. For rail details and rail mounts see "Traveler Rail Details" sheets.
2. Support rails at panel points such that the rails span does not exceed 5300 mm.
3. Use these drawings to locate rail positions.
4. All layout dimensions are given truly horizontal and truly vertical.

* Denotes vertical dimension from top of girder to u/s rail.

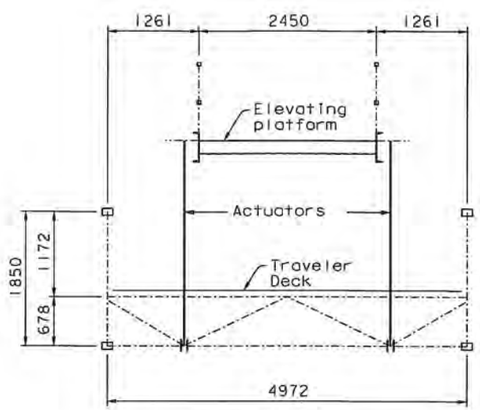

SECTION A-A

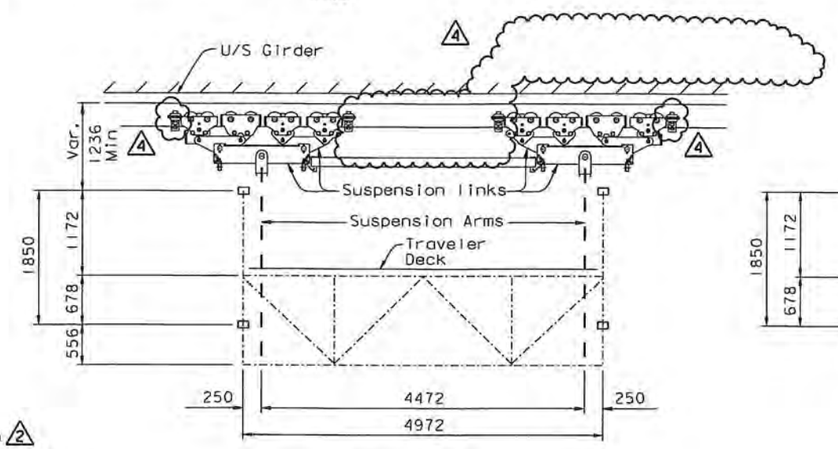

SECTION B-B

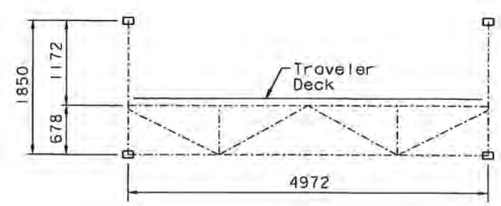

SECTION C-C

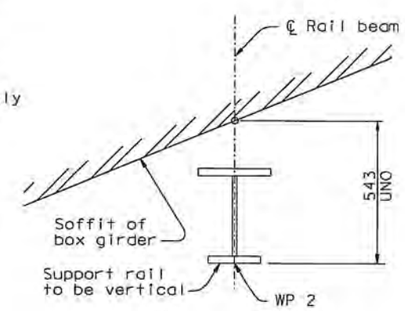

WP 2 Definition

DETAIL B

1:10

REVISION 3 SUPERSEDES REVISIONS 1 & 2

CONTRACT CHANGE ORDER NO. 24S1
SHEET 21 OF 120

REQUESTS FOR INFORMATION NOT ADDRESSED IN THIS CCO REMAIN IN FORCE

MARK	DATE	DESCRIPTIONS	BY	CH'D	CCO#
4	06/19/09	TRAVELER MODIFICATIONS	MN	AS	24S1
3	05/18/09	TRAVELER RAIL MODIFICATIONS	MN	NV	24S0
2	07/20/07	RAIL CHANGE & MISCELLANEOUS DETAILS	MN	NV	24
1	08/04/06	TRAVELER RAILS	MN	NV	24

REVISIONS

SCHEMATIC CROSS SECTIONS

1:40

ALL DIMENSIONS ARE IN MILLIMETERS UNLESS OTHERWISE SHOWN

DESIGN	BY J. Otter	CHECKED M. Nader	
DETAILS	BY J. Otter	CHECKED N. Vo	
QUANTITIES	BY J. Otter	CHECKED J. Leventini	

PREPARED FOR THE STATE OF CALIFORNIA DEPARTMENT OF TRANSPORTATION

R. Manzanarez
PROJECT ENGINEER

BRIDGE NO. 34-0006L/R
KILOMETER POST 13.2/13.9

SAN FRANCISCO OAKLAND BAY BRIDGE
EAST SPAN SEISMIC SAFETY PROJECT
SELF-ANCHORED SUSPENSION BRIDGE
(SUPERSTRUCTURE & TOWER)

SAS-EB TRAVELER OPERATING RANGES-03

R. Valizadeh/V. Toan/Y.L./W.L./F.C.
DESIGN OVERSIGHT
Raya Valizadeh / Vang Toan / Y. Liu
SIGN OFF DATE 06/18/09

Rev. Date: 5-18-98

ORIGINAL SCALE IN MILLIMETERS FOR REDUCED PLANS 0 10 20 30 40 50 60 70 80 90 100

CU 04
EA 0120F1

DISREGARD PRINTS BEARING EARLIER REVISION DATES

REVISION DATES (PRELIMINARY STAGE ONLY) 01/04/02 01/24/02 01/24/02 12/19/02

SHEET 594R4 OF

FILE => I:\bb\04-01200I\sas\contract plans and cco\cco\cco#24s1\2-revision 06-19-09\dgn\aktrv006.dgn

100 % PS&E

USERNAME => gwinrow DATE PLOTTED => 17 JUN 2009 TIME PLOTTED => 09:38:19

DIST.	COUNTY	ROUTE	KILOMETER POST TOTAL PROJECT	SHEET NO.	TOTAL SHEETS
04	SF	80	13.2/13.9	1018R4	1204

REGISTERED ENGINEER - CIVIL

12-6-04
PLANS APPROVAL DATE

Marwan N. Nader
No. C 054426
Exp. 12/31/09
CIVIL
STATE OF CALIFORNIA
REGISTERED PROFESSIONAL ENGINEER

The State of California or its officers or agents shall not be responsible for the accuracy or completeness of electronic copies of this plan sheet.

T.Y. LIN / MOFFATT & NICHOL
825 BATTERY STREET
SAN FRANCISCO, CA 94111

Caltrans now has a web site! To get to the web site, go to: http://www.dot.ca.gov

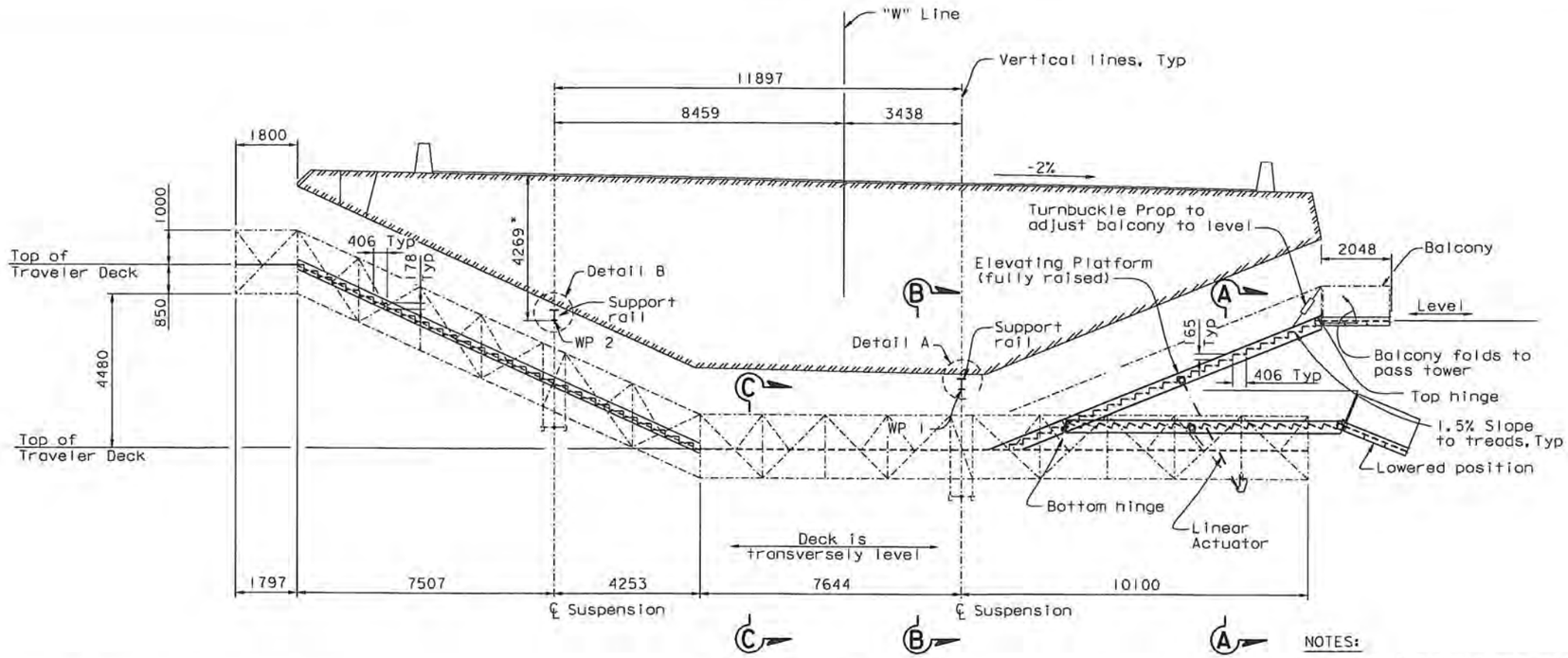

SAS-WB TRAVELER
CONTROLLING DIMENSIONS AT TYP SECTION
1:80

NOTES:

1. For rail details and rail mounts see "Traveler Rail Details" sheets.
2. Support rails at panel points such that the rail span does not exceed 5300 mm.
3. Use these drawings to locate rail positions.
4. All layout dimensions are given truly horizontal and truly vertical.

* Denotes vertical dimension from top of girder to u/s rail.

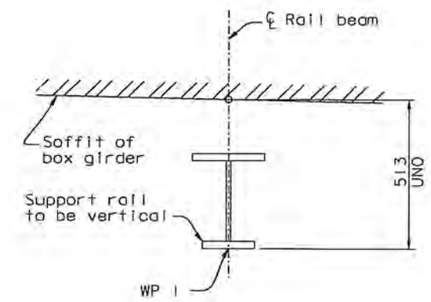

WP 1 Definition

DETAIL A
1:10

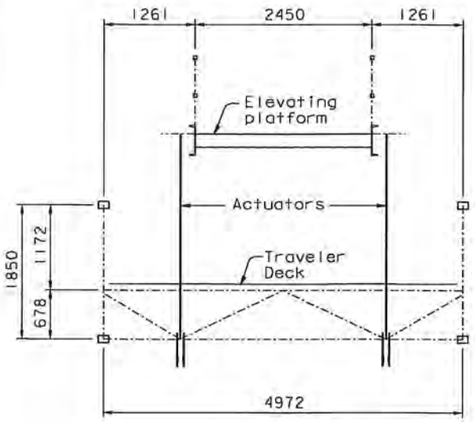

SECTION A-A

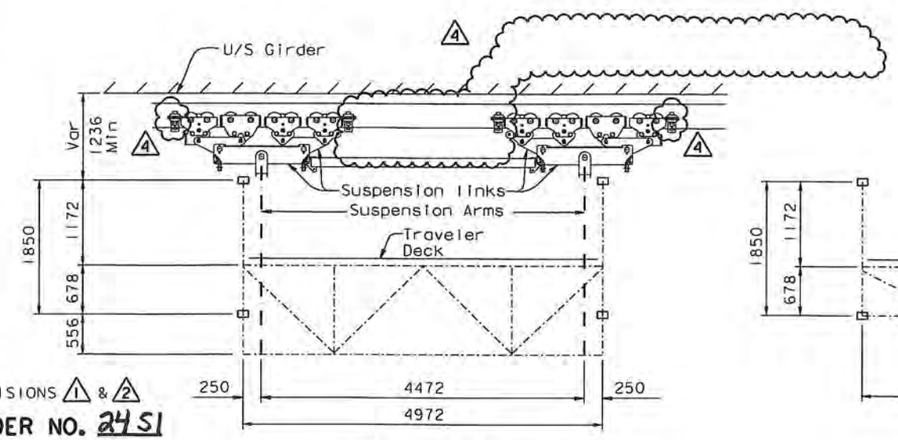

SECTION B-B

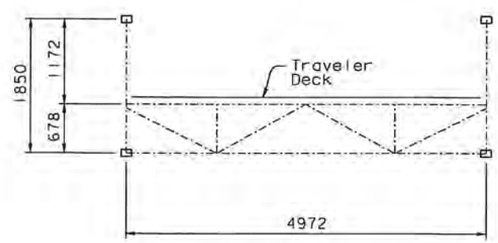

SECTION C-C

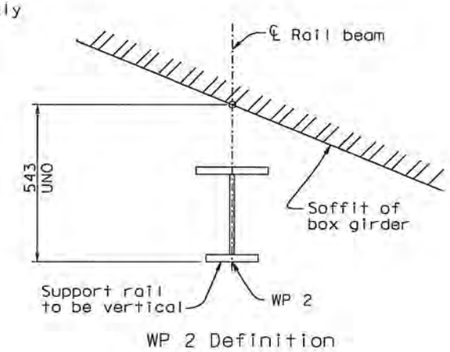

WP 2 Definition

DETAIL B
1:10

SCHEMATIC CROSS SECTIONS
1:40

REVISION 3 SUPERSEDES REVISIONS 1 & 2

CONTRACT CHANGE ORDER NO. 24S1
SHEET 22 OF 120

REQUESTS FOR INFORMATION NOT ADDRESSED IN THIS CCO REMAIN IN FORCE

MARK	DATE	DESCRIPTIONS	BY	CH'D	CCO#
4	06/19/09	TRAVELER MODIFICATIONS	MN	AS	24S1
3	05/18/09	TRAVELER RAIL MODIFICATIONS	MN	NV	24S0
2	07/20/07	RAIL CHANGE & MISCELLANEOUS DETAILS	MN	NV	24
1	08/04/06	TRAVELER RAILS	MN	NV	24

REVISIONS

ALL DIMENSIONS ARE IN MILLIMETERS UNLESS OTHERWISE SHOWN

R. Valizadeh/V. Toan/Y.L./W.L./F.C.
DESIGN OVERSIGHT
SIGN OFF DATE 06/19/09

	BY	CHECKED
DESIGN	J. Otter	M. Nader
DETAILS	J. Otter	N. Vo
QUANTITIES	J. Otter	J. Leventini

PREPARED FOR THE STATE OF CALIFORNIA DEPARTMENT OF TRANSPORTATION

R. Manzanarez
PROJECT ENGINEER

BRIDGE NO. 34-0006L/R
KILOMETER POST 13.2/13.9

SAN FRANCISCO OAKLAND BAY BRIDGE
EAST SPAN SEISMIC SAFETY PROJECT
SELF-ANCHORED SUSPENSION BRIDGE
(SUPERSTRUCTURE & TOWER)

SAS-WB TRAVELER OPERATING RANGES-03

Rev. Date: 5-18-98

ORIGINAL SCALE IN MILLIMETERS FOR REDUCED PLANS 0 10 20 30 40 50 60 70 80 90 100

CU 04
EA 0120F1

DISREGARD PRINTS BEARING EARLIER REVISION DATES

REVISION DATES (PRELIMINARY STAGE ONLY) 05/08/02 05/13/02 07/09/02 12/15/02

SHEET 601R4 OF

FILE => I:\bb\04-0120F1\sas\contract plans and cco\cco\cco*24s1\2-revision 06-19-09\dgn\aktrv013.dgn

100 % PS&E

USERNAME => owinrow DATE PLOTTED => 17 JUN 2009 TIME PLOTTED => 09:39:22

DIST.	COUNTY	ROUTE	KILOMETER POST TOTAL PROJECT	SHEET NO.	TOTAL SHEETS
04	SF	80	13.2/13.9	1028R4	1204

REGISTERED ENGINEER - CIVIL

12-6-04
PLANS APPROVAL DATE

REGISTERED PROFESSIONAL ENGINEER Marwan N. Nader No. C 054426 Exp. 12/31/09 CIVIL STATE OF CALIFORNIA

The State of California or its officers or agents shall not be responsible for the accuracy or completeness of electronic copies of this plan sheet.

T.Y. LIN / MOFFATT & NICHOL
825 BATTERY STREET
SAN FRANCISCO, CA 94111

Caltrans now has a web site! To get to the web site, go to: http://www.dot.ca.gov

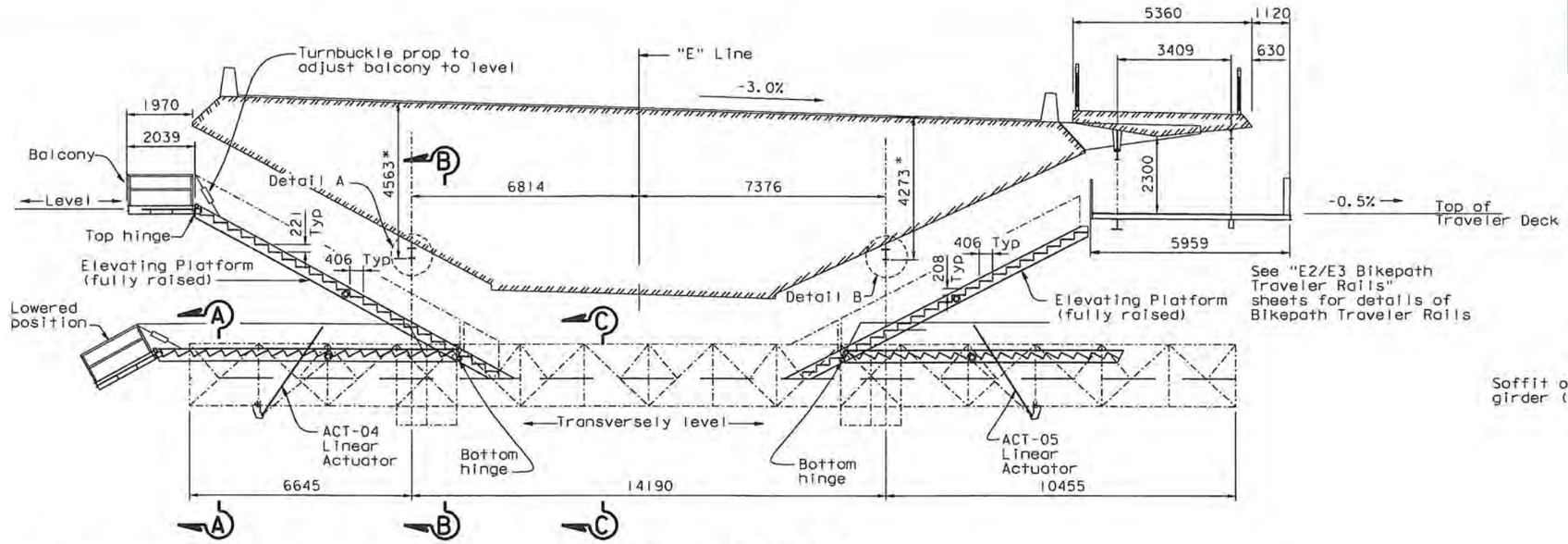

SKYWAY STRUCTURE, RAIL MOUNTS AND UPPER RAIL ON SKYWAY IS WORK DONE BY OTHERS (SEE CONTRACT No. 04-012024)

E2/E3 EB TRAVELER

TOWARDS WEST END OF TRANSITION SPAN

CONTROLLING DIMENSIONS

1:80

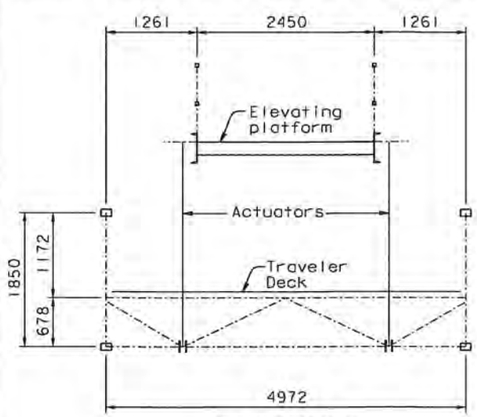

SECTION A-A

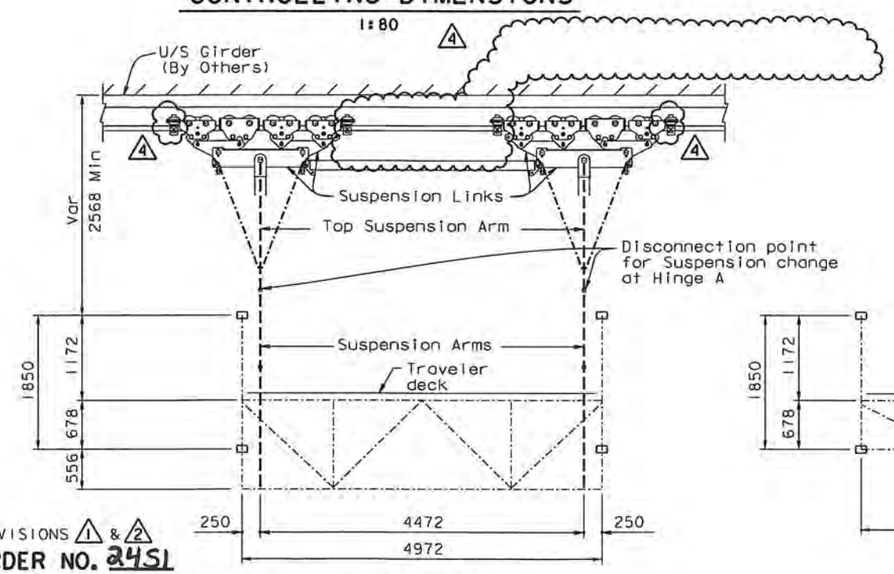

SECTION B-B

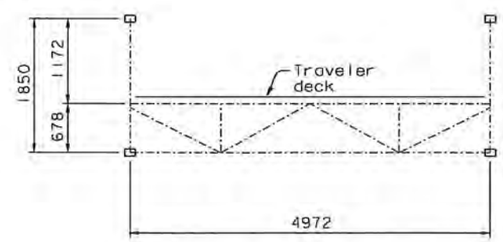

SECTION C-C

NOTES:

1. For rail details and rail mounts see "Traveler Rail Details" sheets.
2. Support rails at panel points such that the rails span does not exceed 5300 mm.
3. All layout dimensions are given truly horizontal and truly vertical.
4. The Contractor shall remove the existing Skyway Traveler as-built upper rails. For replacement rail details, see "Skyway Traveler Rail Replacement Details No. 1 to No. 9" sheets.

* Denotes vertical dimension from top of girder to u/s rail.

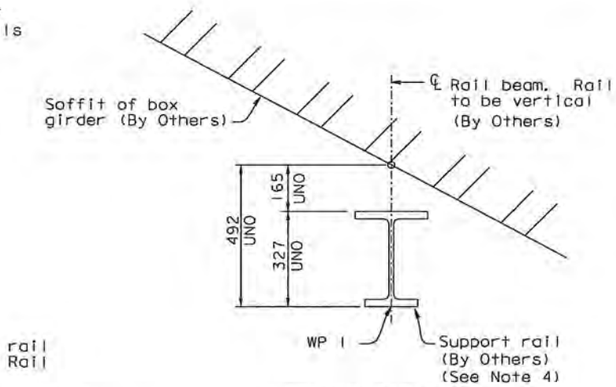

WP 1 Definition

DETAIL A

1:10

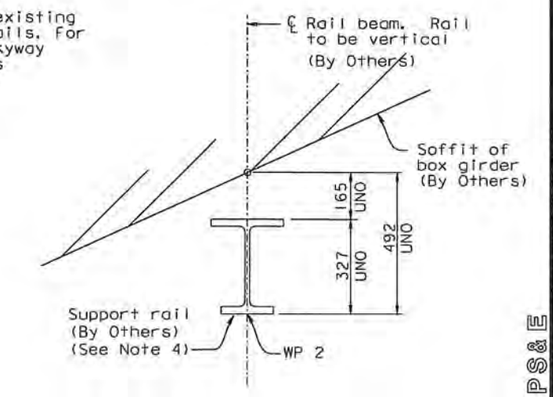

WP 2 Definition

DETAIL B

1:10

REVISION 3 SUPERSEDES REVISIONS 1 & 2

CONTRACT CHANGE ORDER NO. 2451
SHEET 23 OF 120

REQUESTS FOR INFORMATION NOT ADDRESSED IN THIS CCO REMAIN IN FORCE

MARK	DATE	DESCRIPTIONS	BY	CH'D	CCO#
4	06/19/09	TRAVELER MODIFICATIONS	MN	AS	2451
3	05/18/09	TRAVELER RAIL MODIFICATIONS	MN	NV	2450
2	07/20/07	RAIL CHANGE & MISCELLANEOUS DETAILS	MN	NV	24
1	08/04/06	TRAVELER RAILS	MN	NV	24

REVISIONS

SCHEMATIC CROSS SECTIONS

1:40

ALL DIMENSIONS ARE IN MILLIMETERS UNLESS OTHERWISE SHOWN

R. Vallizadeh/V. Toan/Y.L./W.L./F.C.
DESIGN OVERSIGHT
SIGN OFF DATE 06/19/09

	BY	CHECKED
DESIGN	J. Otter	M. Nader
DETAILS	J. Otter	N. Vo
QUANTITIES	J. Otter	J. Leventini

PREPARED FOR THE STATE OF CALIFORNIA DEPARTMENT OF TRANSPORTATION

R. Manzanarez
PROJECT ENGINEER

BRIDGE NO. 34-0006L/R
KILOMETER POST 13.2/13.9

SAN FRANCISCO OAKLAND BAY BRIDGE
EAST SPAN SEISMIC SAFETY PROJECT
SELF-ANCHORED SUSPENSION BRIDGE
(SUPERSTRUCTURE & TOWER)

E2/E3 EB TRAVELER OPERATING RANGES-07

Rev. Date: 5-18-98

ORIGINAL SCALE IN MILLIMETERS FOR REDUCED PLANS 0 10 20 30 40 50 60 70 80 90 100

CU 04
EA 0120F1

DISREGARD PRINTS BEARING EARLIER REVISION DATES 04/25/02 07/01/02 12/19/02

SHEET 61 OF 1R4

FILE => I:\bb\04-012001\sas\contract plans and cco\cco\cco#2451\2-revision 06-19-09\dgn\aktrv023.dgn

100 % PS&E

USERNAME => dwinrow DATE PLOTTED => 17 JUN 2009 TIME PLOTTED => 09:40:16

DIST.	COUNTY	ROUTE	KILOMETER POST TOTAL PROJECT	SHEET NO.	TOTAL SHEETS
04	SF	80	13.2/13.9	1036R4	1204

REGISTERED ENGINEER - CIVIL

12-6-04
PLANS APPROVAL DATE

REGISTERED PROFESSIONAL ENGINEER Marwan N. Nader No. C 054426 Exp. 12/31/09 CIVIL STATE OF CALIFORNIA

The State of California or its officers or agents shall not be responsible for the accuracy or completeness of electronic copies of this plan sheet.

T.Y. LIN / MOFFATT & NICHOL
825 BATTERY STREET
SAN FRANCISCO, CA 94111

Caltrans now has a web site! To get to the web site, go to: http://www.dot.ca.gov

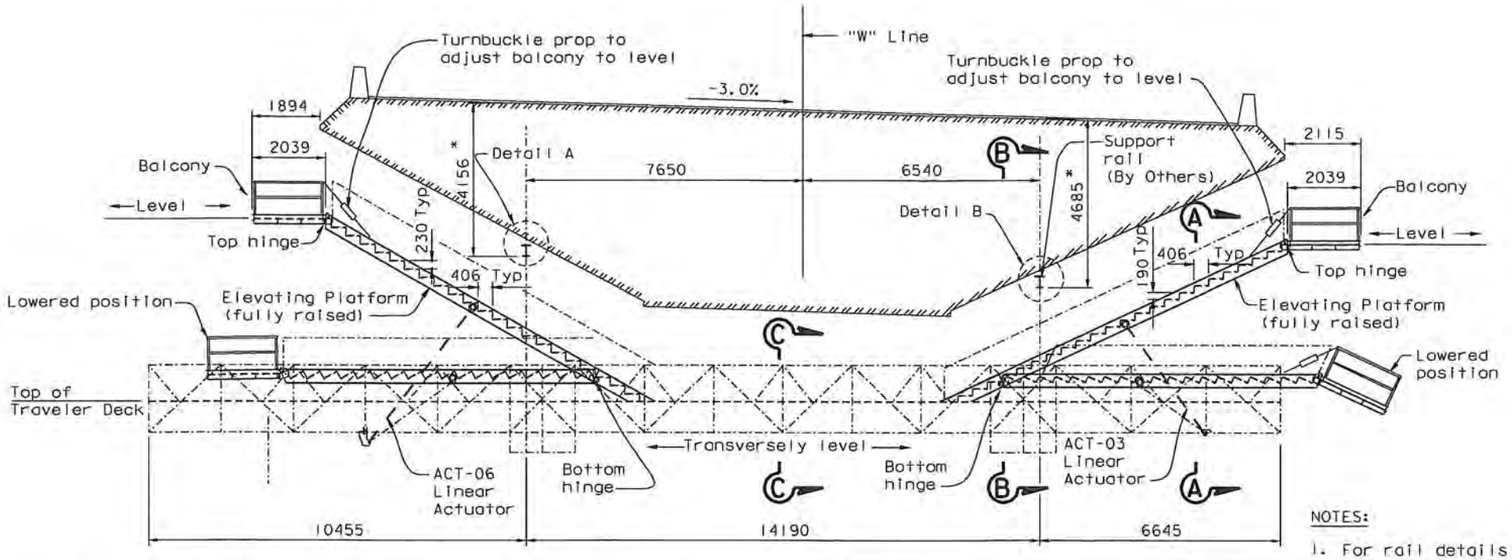

STA. 62+17.385

TOWARDS WEST END OF TRANSITION SPAN

CONTROLLING DIMENSIONS

1:80

SKYWAY STRUCTURE, RAIL SUPPORTS AND UPPER SKYWAY RAIL IS WORK DONE BY OTHERS (SEE CONTRACT No. 04-012024)

NOTES:

1. For rail details and rail mounts see "Traveler Rail Details" sheets.
2. Support rails at panel points such that the rails span does not exceed 5300 mm.
3. All layout dimensions are given truly horizontal and truly vertical.
4. Use these drawings to locate rail positions.
5. The Contractor shall remove the existing Skyway Traveler as-built upper rails. For replacement rail details, see "Skyway Traveler Rail Replacement Details No. 1 to No. 9" sheets.

* Denotes vertical dimension from top of girder to u/s rail.

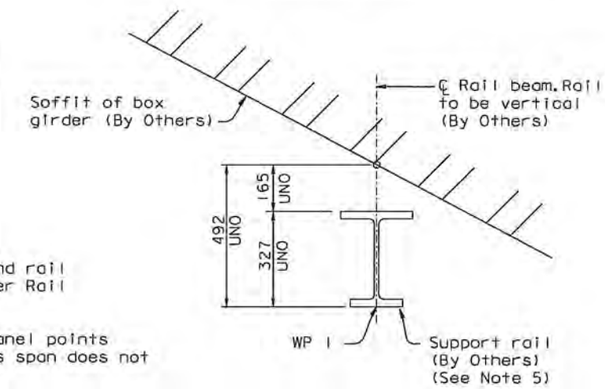

WP 1 Definition

DETAIL A

1:10

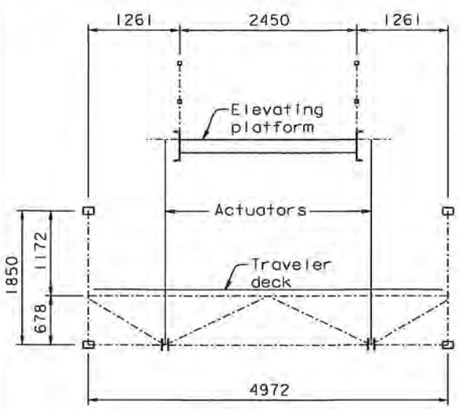

SECTION A-A

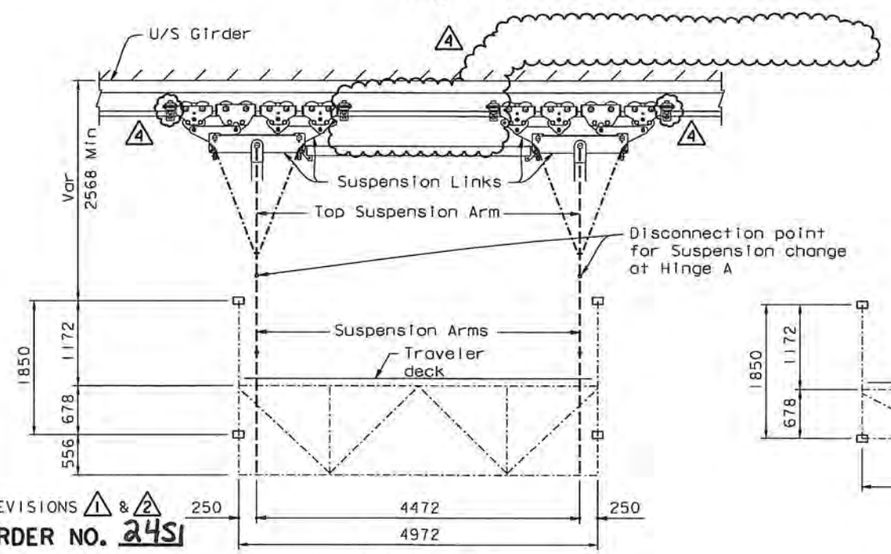

SECTION B-B

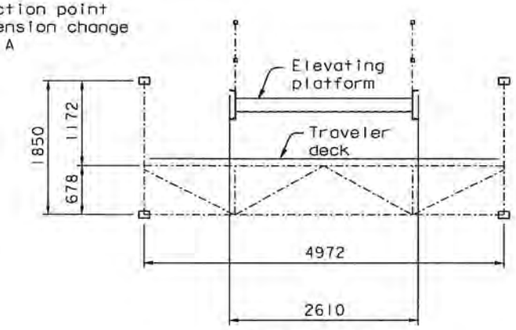

SECTION C-C

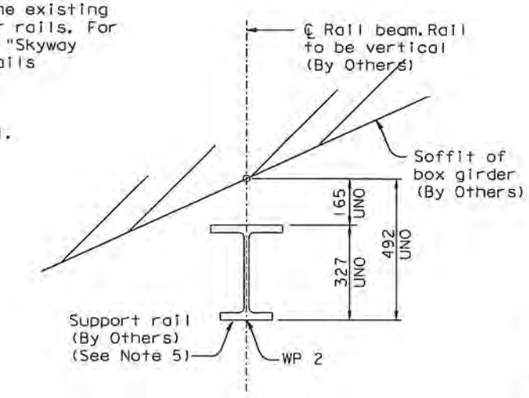

WP 2 Definition

DETAIL B

1:10

REVISION 3 SUPERSEDES REVISIONS 1 & 2

CONTRACT CHANGE ORDER NO. 24S1
SHEET 24 OF 120

REQUESTS FOR INFORMATION NOT ADDRESSED IN THIS CCO REMAIN IN FORCE

SCHEMATIC CROSS SECTIONS

1:40

ALL DIMENSIONS ARE IN MILLIMETERS UNLESS OTHERWISE SHOWN

MARK	DATE	DESCRIPTIONS	BY	CH'D	CCO#
4	06/19/09	TRAVELER MODIFICATIONS	MN	AS	24S1
3	05/18/09	TRAVELER RAIL MODIFICATIONS	MN	NV	24S0
2	07/20/07	RAIL CHANGE & MISCELLANEOUS DETAILS	MN	NV	24
1	08/04/06	TRAVELER RAILS	MN	NV	24

REVISIONS

R. Valizadeh/V. Toan/Y.L./W.L./F.C.
DESIGN OVERSIGHT
SIGN OFF DATE 06/19/09

	BY	CHECKED
DESIGN	J. Otter	M. Nader
DETAILS	J. Otter	N. Vo
QUANTITIES	J. Otter	J. Leventini

PREPARED FOR THE STATE OF CALIFORNIA DEPARTMENT OF TRANSPORTATION

R. Manzanarez
PROJECT ENGINEER

BRIDGE NO. 34-0006L/R
KILOMETER POST 13.2/13.9

SAN FRANCISCO OAKLAND BAY BRIDGE
EAST SPAN SEISMIC SAFETY PROJECT
SELF-ANCHORED SUSPENSION BRIDGE
(SUPERSTRUCTURE & TOWER)

E2/E3 WB TRAVELER OPERATING RANGES-07

Rev. Date: 5-18-98

ORIGINAL SCALE IN MILLIMETERS FOR REDUCED PLANS 0 10 20 30 40 50 60 70 80 90 100

CU 04
EA 0120F1

DISREGARD PRINTS BEARING EARLIER REVISION DATES 05/25/02 01/20/02 12/13/02

SHEET 619R4 OF

FILE => I:\bb\04-012001\sas\contract plans and cco\cco\cco#24s1\2-revision 06-19-09\dgn\aktrv031.dgn

100 % PS&E

USERNAME => dwinrow DATE PLOTTED => 17 JUN 2009 TIME PLOTTED => 09:41:06

DIST.	COUNTY	ROUTE	KILOMETER POST TOTAL PROJECT	SHEET NO.	TOTAL SHEETS
04	SF	80	13.2/13.9	1038R2	1204

REGISTERED ENGINEER - CIVIL

12-6-04
PLANS APPROVAL DATE

REGISTERED PROFESSIONAL ENGINEER Tien Hung Ho No. C 43990 Exp. 06/30/11 CIVIL STATE OF CALIFORNIA

The State of California or its officers or agents shall not be responsible for the accuracy or completeness of electronic copies of this plan sheet.

T.Y. LIN / MOFFATT & NICHOL
825 BATTERY STREET
SAN FRANCISCO, CA 94111

Caltrans now has a web site! To get to the web site, go to: http://www.dot.ca.gov

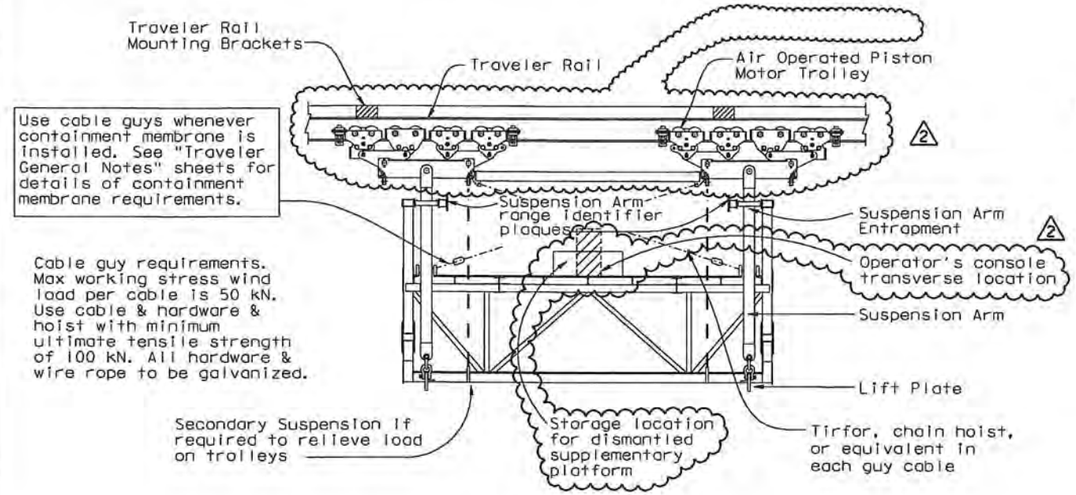

SECTION A-A

1:40

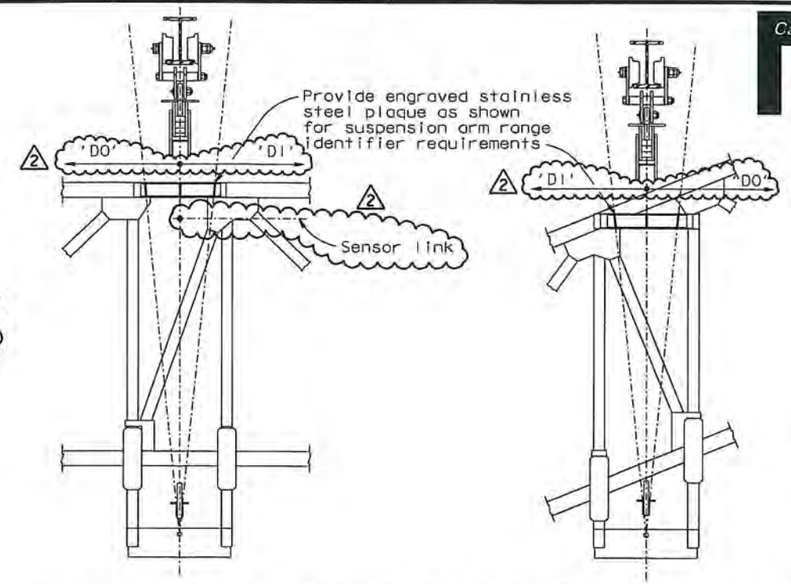

SUSPENSION ARM RANGE IDENTIFIER REQUIREMENTS

1:20

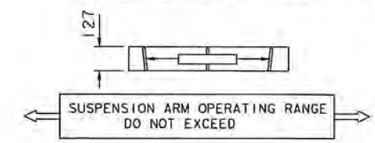

PLAQUE DETAILS AND REQUIRED TEXT

NTS

For allowable ranges & dimensions 'DO' & 'DI' see, "Traveler Suspension Connection Details No. 6" sheet

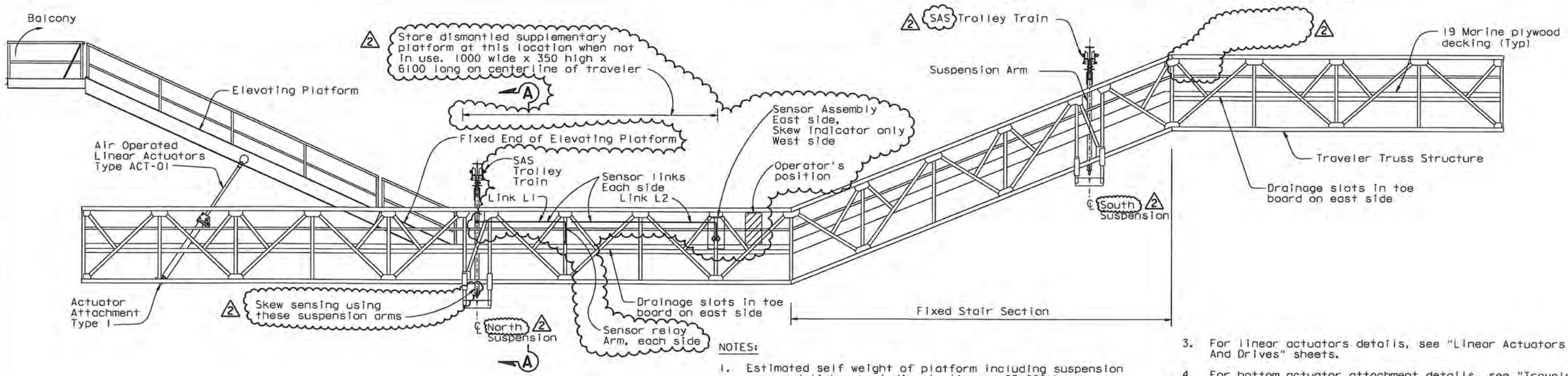

TRAVELER ASSEMBLY

1:50

NOTES:

1. Estimated self weight of platform including suspension arms and links, excluding trolleys = 25,000 kg
2. DESIGN LOADS
   Dead load of stored supplementary platform = 850 kg
   Design live load = 0.72 kPa (uniformly distributed) plus one moving load of 450 kg.
   Max total live load on platform not to exceed = 13,200 kg
   Do not exceed this loading
3. For linear actuators details, see "Linear Actuators And Drives" sheets.
4. For bottom actuator attachment details, see "Traveler Common Details" sheets.
5. For skew sensor, sensor links and skew indicator, see "Skew Sensor and Control" sheets.

Post the above information on a stainless steel plaque at the operator's station. Plaque size 200x300 Min.

ALL DIMENSIONS ARE IN MILLIMETERS UNLESS OTHERWISE SHOWN

REVISION SUPERSEDES REVISION

CONTRACT CHANGE ORDER NO. 24S1
SHEET 25 OF 120

REQUESTS FOR INFORMATION NOT ADDRESSED IN THIS CCO REMAIN IN FORCE

MARK	DATE	DESCRIPTIONS	BY	CH'D	CCO#
2	06/19/09	TRAVELER MODIFICATIONS	TH	AS	24S1
1	07/20/07	RAIL CHANGE & MISCELLANEOUS DETAILS	TH	NV	24

REVISIONS

R. Valizadeh/V. Toon/Y.L./W.L./F.C.
DESIGN OVERSIGHT
SIGN OFF DATE 06/19/09

Rev. Date: 5-18-98

	BY	CHECKED
DESIGN	J. Otter	T. Ho
DETAILS	J. Otter	J. Leventini
QUANTITIES	J. Otter	J. Leventini

ORIGINAL SCALE IN MILLIMETERS FOR REDUCED PLANS 0 10 20 30 40 50 60 70 80 90 100

PREPARED FOR THE STATE OF CALIFORNIA DEPARTMENT OF TRANSPORTATION

R. Manzanorez
PROJECT ENGINEER

CU 04
EA 0120F1

BRIDGE NO. 34-0006L/R
KILOMETER POST 13.2/13.9

DISREGARD PRINTS BEARING EARLIER REVISION DATES

REVISION DATES (PRELIMINARY STAGE ONLY) 04/25/02 07/26/02 12/16/02

SHEET 621R2 OF

SAN FRANCISCO OAKLAND BAY BRIDGE
EAST SPAN SEISMIC SAFETY PROJECT
SELF-ANCHORED SUSPENSION BRIDGE
(SUPERSTRUCTURE & TOWER)

SAS EB TRAVELER ASSEMBLY

100 % PS&E

USERNAME => dwinrow DATE PLOTTED => 17 JUN 2009 TIME PLOTTED => 09:41:55

FILE => I:\bb\04-01200I\sas\contract plans and cco\cco\cco#24s1\2-revision 06-19-09\dgn\aktrv033.dgn

DIST.	COUNTY	ROUTE	KILOMETER POST TOTAL PROJECT	SHEET NO.	TOTAL SHEETS
04	SF	80	13.2/13.9	1039R1	1204

Caltrans Metric

REGISTERED ENGINEER - CIVIL

12-6-04
PLANS APPROVAL DATE

REGISTERED PROFESSIONAL ENGINEER Tien Hung Ho No. C 43990 Exp. 06/03/11 CIVIL STATE OF CALIFORNIA

The State of California or its officers or agents shall not be responsible for the accuracy or completeness of electronic copies of this plan sheet.

T.Y. LIN / MOFFATT & NICHOL
825 BATTERY STREET
SAN FRANCISCO, CA 94111

Caltrans now has a web site! To get to the web site, go to: http://www.dot.ca.gov

LEGEND:

A TS 102x51x4.8
B TS 102x76x4.8
C W 200x31
D S100x11
E TS 102x51x4.8 + PL
F TS 89x64x4.8
G Plate 6.4 (shown thus ▨)
H TS 102x76x6.4

⊠ 30 Gal Sump location, for details see "Traveler Common Details No. 8A" sheet.

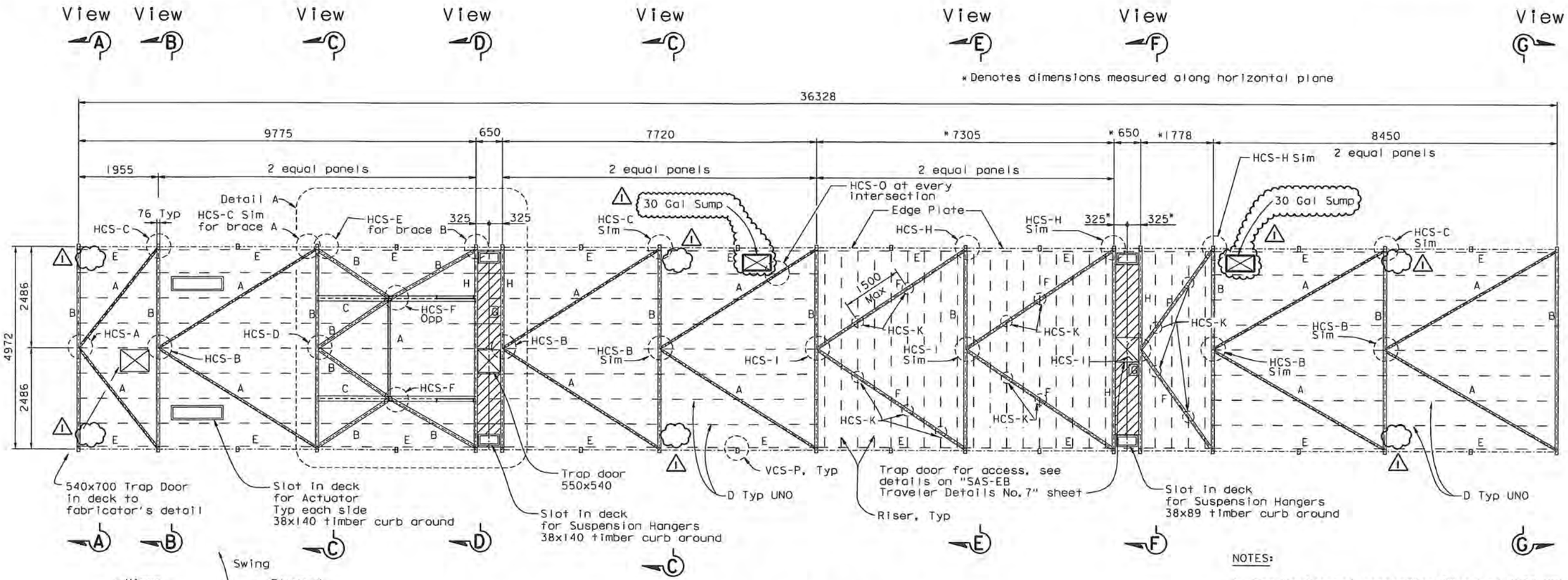

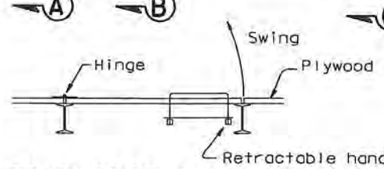

TRAP DOOR SCHEMATIC
1:10

PLAN OF SAS-EB PLATFORM AND HORIZONTAL CONNECTION IDENTIFICATION (PLAN AT DECK LEVEL)
1:50

NOTES:

1. For Horizontal connection Standard (HCS-XX) see HCS group of "Traveler Connection Details" sheets.
2. For Views A to G see "Traveler Common Sections" sheets.
3. For Detail A see "SAS-EB Traveler Details No. 3" sheet.
4. For VCS-P, see "Traveler Connection Details No. 8" sheet.

CONTRACT CHANGE ORDER NO. 24S1
SHEET 26 OF 120

REQUESTS FOR INFORMATION NOT ADDRESSED IN THIS CCO REMAIN IN FORCE

SAS EB TRAVELER TRUSS PLAN

ALL DIMENSIONS ARE IN MILLIMETERS UNLESS OTHERWISE SHOWN

SAN FRANCISCO OAKLAND BAY BRIDGE
EAST SPAN SEISMIC SAFETY PROJECT
SELF-ANCHORED SUSPENSION BRIDGE (SUPERSTRUCTURE & TOWER)

SAS-EB TRAVELER DETAILS NO. 1

R. Valizadeh/V. Toan/Y.L./W.L./F.C.
DESIGN OVERSIGHT
Roger Valizadeh / Vong P. Toan / Y. Liu
SIGN OFF DATE 02/12/10

MARK	DATE	DESCRIPTIONS	BY	CH'D	CCO#
1	02/12/10	TRAVELER MODIFICATIONS	JO	TH	24S1

REVISIONS

DESIGN	BY J. Otter	CHECKED T. Ho	
DETAILS	BY J. Otter	CHECKED J. Leventini	
QUANTITIES	BY J. Otter	CHECKED J. Leventini	

PREPARED FOR THE STATE OF CALIFORNIA DEPARTMENT OF TRANSPORTATION

R. Manzanarez
PROJECT ENGINEER

BRIDGE NO. 34-0006L/R
KILOMETER POST 13.2/13.9

Rev. Date: 5-18-98

ORIGINAL SCALE IN MILLIMETERS FOR REDUCED PLANS 0 10 20 30 40 50 60 70 80 90 100

CU 04
EA 0120F1

DISREGARD PRINTS BEARING EARLIER REVISION DATES

REVISION DATES (PRELIMINARY STAGE ONLY) 04/15/02 07/01/02 12/19/02

SHEET 622R1 OF

FILE => I:\bb\04-012001\sas\contract plans and cco\cco\cco#24s1\5-revision 02-12-10\dgn\aktrv034.dgn

USERNAME => arivera DATE PLOTTED => 19 FEB 2010 TIME PLOTTED => 08:54:15

100 % PS&E

DIST.	COUNTY	ROUTE	KILOMETER POST TOTAL PROJECT	SHEET NO.	TOTAL SHEETS
04	SF	80	13.2/13.9	1040R1	1204

Caltrans Metric

REGISTERED ENGINEER - CIVIL

12-6-04
PLANS APPROVAL DATE

The State of California or its officers or agents shall not be responsible for the accuracy or completeness of electronic copies of this plan sheet.

REGISTERED PROFESSIONAL ENGINEER Tien Hung Ho No. C 43990 Exp. 06/30/11 CIVIL STATE OF CALIFORNIA

T.Y. LIN / MOFFATT & NICHOL
825 BATTERY STREET
SAN FRANCISCO, CA 94111

Caltrans now has a web site! To get to the web site, go to: http://www.dot.ca.gov

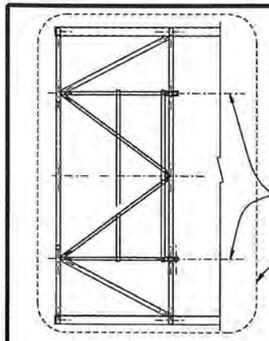

SECTION H-H
1:50

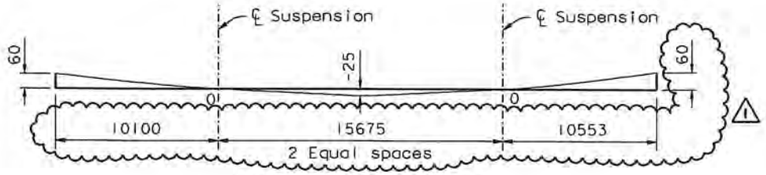

CAMBER DIAGRAM
NTS
Camber to be a smooth curve joining the points shown.

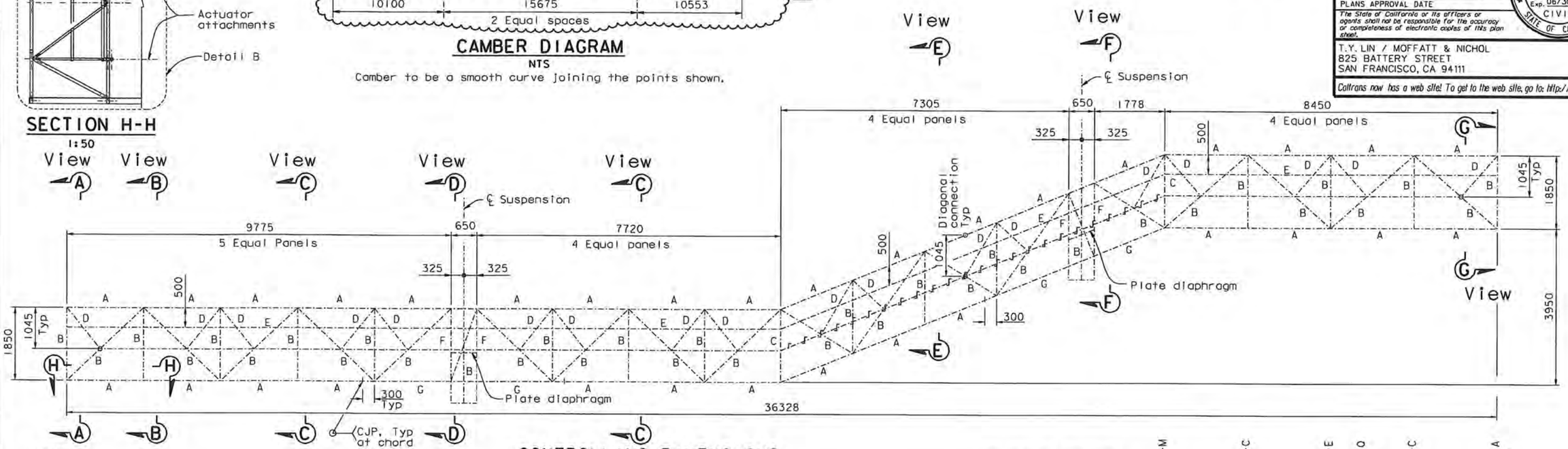

CONTROLLING DIMENSIONS
1:50

LEGEND:

A	TS 152x102x4.8
B	TS 127x76x4.8
C	TS 127x76x6.4
D	TS 76x51x4.8
E	PL 8x51
F	TS 127x76x7.9 with Plates
G	TS 152x102x6.4

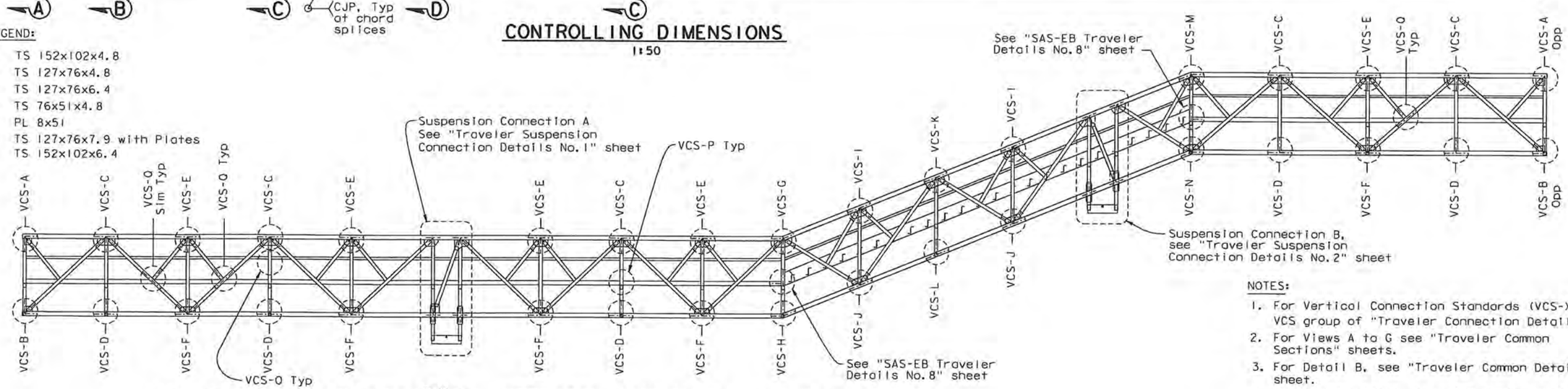

NOTES:

1. For Vertical Connection Standards (VCS-XX) see VCS group of "Traveler Connection Details" sheets.
2. For Views A to G see "Traveler Common Sections" sheets.
3. For Detail B, see "Traveler Common Details No.6" sheet.
4. All chord splices to be CJP welded splices with 100% NDT.

CONTRACT CHANGE ORDER NO. 24S1
SHEET 27 OF 120

VERTICAL CONNECTION IDENTIFICATION
1:50

SAS EB TRAVELER ELEVATION

REQUESTS FOR INFORMATION NOT ADDRESSED IN THIS CCO REMAIN IN FORCE

ALL DIMENSIONS ARE IN MILLIMETERS UNLESS OTHERWISE SHOWN

SAN FRANCISCO OAKLAND BAY BRIDGE
EAST SPAN SEISMIC SAFETY PROJECT
SELF-ANCHORED SUSPENSION BRIDGE
(SUPERSTRUCTURE & TOWER)

SAS-EB TRAVELER DETAILS NO. 2

R. Valizadeh/V. Toan/Y.L./W.L./F.C.
DESIGN OVERSIGHT
Reza Valizadeh / Vong Toan / Y. Liu
SIGN OFF DATE 08/21/09

MARK	DATE	DESCRIPTIONS	BY	CH'D	CCO#
1	08/21/09	TRAVELER MODIFICATIONS	TH	AS	24S1

REVISIONS

	BY	CHECKED
DESIGN	J. Otter	T. Ho
DETAILS	J. Otter	J. Leventini
QUANTITIES	J. Otter	J. Leventini

PREPARED FOR THE STATE OF CALIFORNIA DEPARTMENT OF TRANSPORTATION

R. Manzanarez
PROJECT ENGINEER

BRIDGE NO. 34-0006L/R
KILOMETER POST 13.2/13.9

Rev. Date: 5-18-98

ORIGINAL SCALE IN MILLIMETERS FOR REDUCED PLANS 0 10 20 30 40 50 60 70 80 90 100

CU 04
EA 0120F1

DISREGARD PRINTS BEARING EARLIER REVISION DATES

REVISION DATES (PRELIMINARY STAGE ONLY) 04/15/02 07/01/02 12/19/02

SHEET 623R1 OF

FILE => I:\bb\04-012001\sas\contract plans and cco\cco\cco#24s1\3-revision 08-21-09\dgn\aktrv035.dgn

USERNAME => arivera DATE PLOTTED => 21 AUG 2009 TIME PLOTTED => 14:40:41

100 % PS&E

DIST.	COUNTY	ROUTE	KILOMETER POST TOTAL PROJECT	SHEET NO.	TOTAL SHEETS
04	SF	80	13.2/13.9	1046R1	1204

REGISTERED ENGINEER - CIVIL

12-6-04
PLANS APPROVAL DATE

REGISTERED PROFESSIONAL ENGINEER Tien Hung Ho No. C 43990 Exp. 06/30/11 CIVIL STATE OF CALIFORNIA

The State of California or its officers or agents shall not be responsible for the accuracy or completeness of electronic copies of this plan sheet.

T.Y. LIN / MOFFATT & NICHOL
825 BATTERY STREET
SAN FRANCISCO, CA 94111

Caltrans now has a web site! To get to the web site, go to: http://www.dot.ca.gov

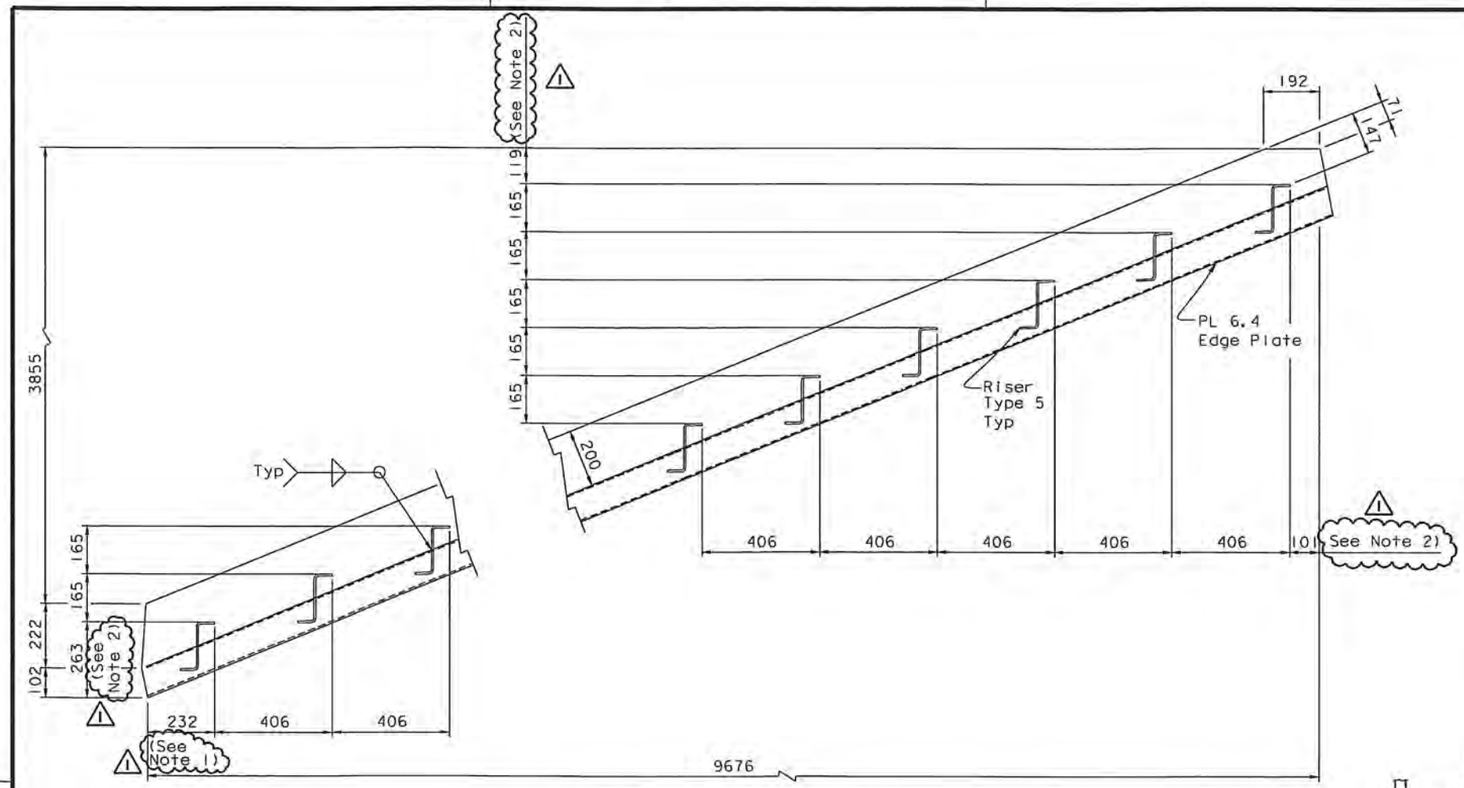

FIXED STAIR SYSTEM
1:10

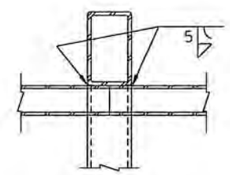

SECTION B-B
1:5

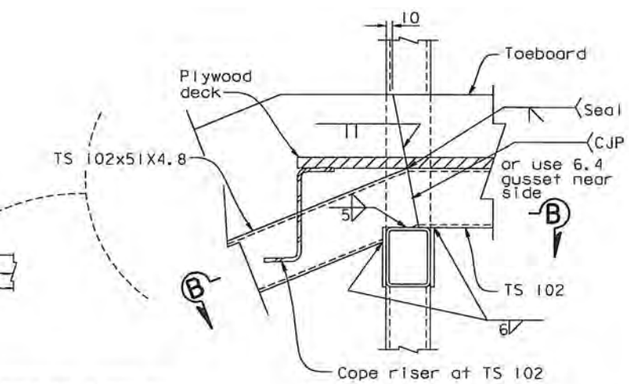

1:5

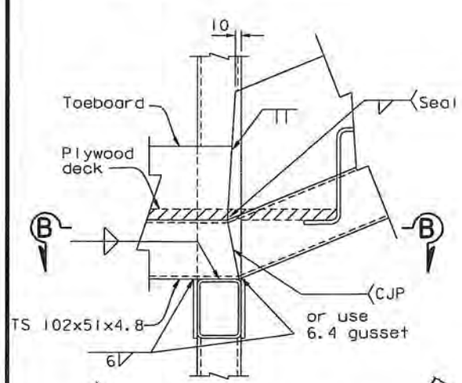

1:5

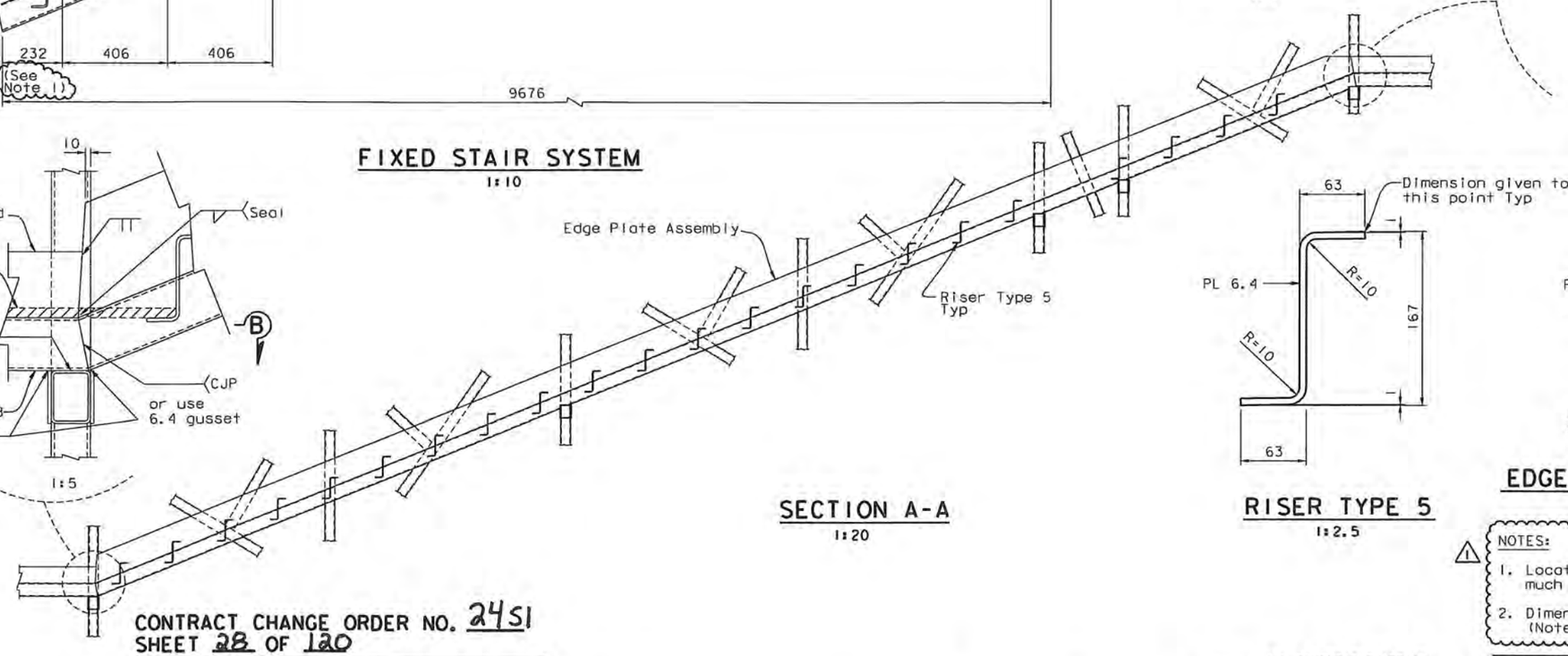

SECTION A-A
1:20

RISER TYPE 5
1:2.5

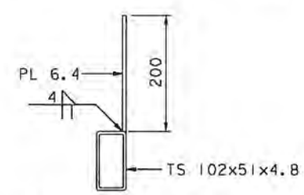

SECTION P-P

EDGE PLATE ASSEMBLY
1:5

NOTES:

1. Location of first stair may be decreased by as much as 40 mm to avoid interference.
2. Dimension is dependent upon first stair location (Note 1) and shall be adjusted accordingly.

CONTRACT CHANGE ORDER NO. 2451
SHEET 28 OF 120

REQUESTS FOR INFORMATION NOT ADDRESSED IN THIS CCO REMAIN IN FORCE

ALL DIMENSIONS ARE IN MILLIMETERS UNLESS OTHERWISE SHOWN

100 % PS&E

R. Vallzadeh/V. Toan/Y.L./W.L./F.C.
DESIGN OVERSIGHT
SIGN OFF DATE 08/21/09

MARK	DATE	REVISIONS: DESCRIPTIONS	BY	CH'D	CCO#
1	08/21/09	TRAVELER MODIFICATIONS	TH	AS	2451

DESIGN	BY J. Otter	CHECKED T. Ho	
DETAILS	BY J. Otter	CHECKED J. Leventini	
QUANTITIES	BY J. Otter	CHECKED J. Leventini	

PREPARED FOR THE STATE OF CALIFORNIA DEPARTMENT OF TRANSPORTATION

R. Manzanarez
PROJECT ENGINEER

BRIDGE NO. 34-0006L/R
KILOMETER POST 13.2/13.9

SAN FRANCISCO OAKLAND BAY BRIDGE
EAST SPAN SEISMIC SAFETY PROJECT
SELF-ANCHORED SUSPENSION BRIDGE
(SUPERSTRUCTURE & TOWER)

SAS-EB TRAVELER DETAILS NO. 8

Rev. Date: 5-18-98

ORIGINAL SCALE IN MILLIMETERS FOR REDUCED PLANS 0 10 20 30 40 50 60 70 80 90 100

CU 04
EA 0120F1

DISREGARD PRINTS BEARING EARLIER REVISION DATES

REVISION DATES (PRELIMINARY STAGE ONLY) 01/09/02 01/30/02 12/13/02

SHEET 629R1 OF

FILE => I:\bb\04-012001\sas\contract plans and cco\cco\cco#2451\3-revision 08-21-09\dgn\aktrv042.dgn

USERNAME => arivera DATE PLOTTED => 21 AUG 2009 TIME PLOTTED => 14:41:45

DIST.	COUNTY	ROUTE	KILOMETER POST TOTAL PROJECT	SHEET NO.	TOTAL SHEETS
04	SF	80	13.2/13.9	1047R2	1204

Caltrans Metric

REGISTERED ENGINEER - CIVIL

12-6-04
PLANS APPROVAL DATE

REGISTERED PROFESSIONAL ENGINEER Tien Hung Ho No. C 43990 Exp. 06/30/11 CIVIL STATE OF CALIFORNIA

The State of California or its officers or agents shall not be responsible for the accuracy or completeness of electronic copies of this plan sheet.

T.Y. LIN / MOFFATT & NICHOL
825 BATTERY STREET
SAN FRANCISCO, CA 94111

Caltrans now has a web site! To get to the web site, go to: http://www.dot.ca.gov

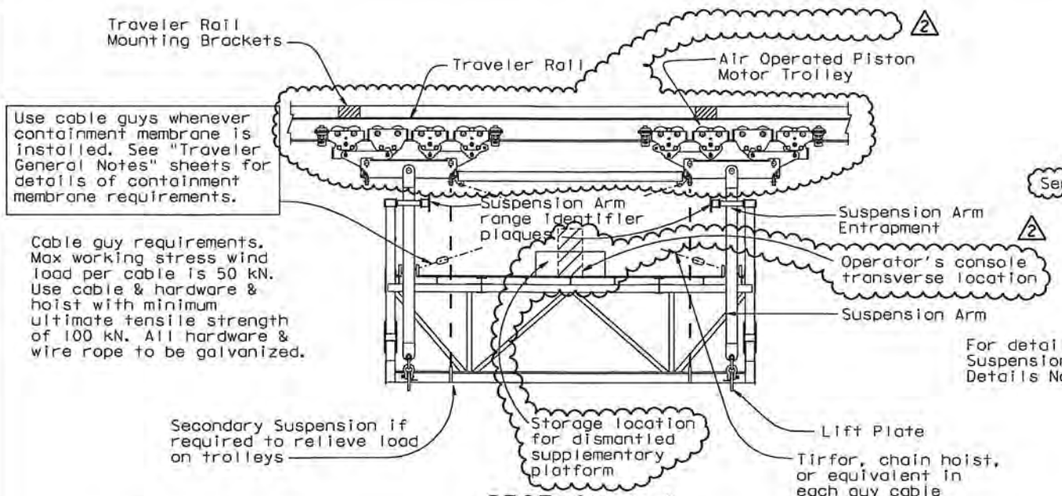

SECTION A-A

1:40

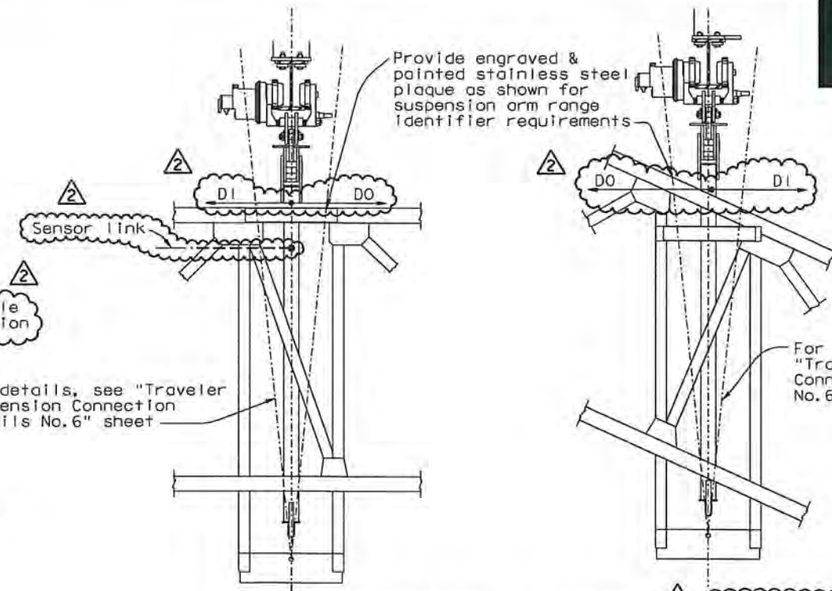

SUSPENSION ARM RANGE

1:20

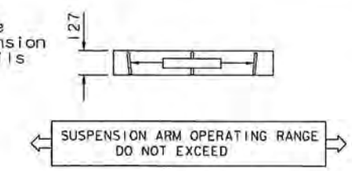

PLAQUE DETAILS AND REQ'D TEXT

NTS

For allowable ranges & dimensions 'DI' & 'DO' see, "Traveler Suspension Connection Details No. 6" sheet

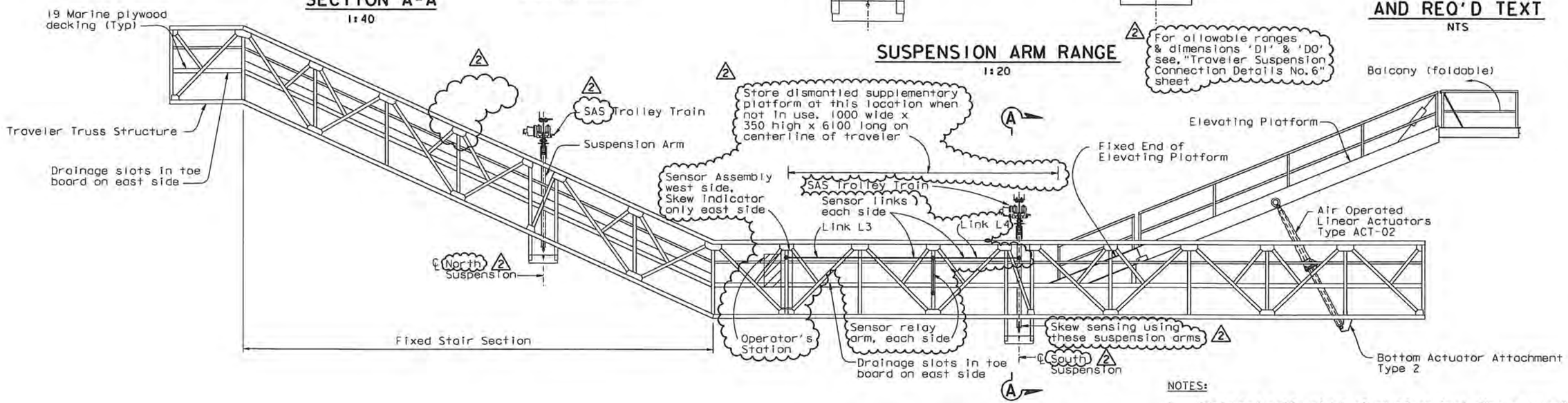

SAS WB TRAVELER ASSEMBLY

1:50

NOTES:

1. Estimated self weight of platform including suspension arms and links, excluding trolleys = 22,000 kg.
2. DESIGN LOADS
   Dead load of stored supplementary platform = 850 kg
   Design live load = 0.12 kPa (uniformly distributed) plus one moving load of 450 kg.
   Max total live load on platform = 12,000 kg Max
   Do not exceed this loading
3. For linear actuators details, see "Linear Actuators And Drives" sheets.
4. For bottom actuator attachment details, see "Traveler Common Details" sheets.
5. For skew sensor, sensor links and skew indicator, see "Skew Sensor and Control" sheets.

Post this information on a stainless steel plaque at the operator's station. Plaque size 200x300 Min.

REVISION SUPERSEDES REVISION

CONTRACT CHANGE ORDER NO. 2451
SHEET 29 OF 120

REQUESTS FOR INFORMATION NOT ADDRESSED IN THIS CCO REMAIN IN FORCE

ALL DIMENSIONS ARE IN MILLIMETERS UNLESS OTHERWISE SHOWN

MARK	DATE	DESCRIPTIONS	BY	CH'D	CCO#
2	06/19/09	TRAVELER MODIFICATIONS	TH	AS	2451
1	01/20/07	RAIL CHANGE & MISCELLANEOUS DETAILS	TH	NV	24

REVISIONS

R. Vallizadeh/V. Toan/Y.L./W.L./F.C.
DESIGN OVERSIGHT
SIGN OFF DATE 06/19/09

DESIGN BY J. Otter CHECKED T. Ho
DETAILS BY J. Otter CHECKED J. Leventini
QUANTITIES BY J. Otter CHECKED J. Leventini

PREPARED FOR THE STATE OF CALIFORNIA DEPARTMENT OF TRANSPORTATION

R. Manzanarez
PROJECT ENGINEER

BRIDGE NO. 34-0006L/R
KILOMETER POST 13.2/13.9

SAN FRANCISCO OAKLAND BAY BRIDGE
EAST SPAN SEISMIC SAFETY PROJECT
SELF-ANCHORED SUSPENSION BRIDGE (SUPERSTRUCTURE & TOWER)

SAS-WB TRAVELER ASSEMBLY

Rev. Date: 5-18-98

ORIGINAL SCALE IN MILLIMETERS FOR REDUCED PLANS 0 10 20 30 40 50 60 70 80 90 100

CU 04
EA 0120F1

DISREGARD PRINTS BEARING EARLIER REVISION DATES 01/20/02 01/20/02 12/19/02

SHEET 630R2 OF

FILE => I:\bb\04-012001\sas\contract plans and cco\cco\cco#2451\2-revision 06-19-09\dgn\aktrv043.dgn

100 % PS&E

USERNAME => dwinrow DATE PLOTTED => 17 JUN 2009 TIME PLOTTED => 09:46:22

DIST.	COUNTY	ROUTE	KILOMETER POST TOTAL PROJECT	SHEET NO.	TOTAL SHEETS
04	SF	80	13.2/13.9	104BR2	1204

REGISTERED ENGINEER - CIVIL

12-6-04
PLANS APPROVAL DATE

The State of California or its officers or agents shall not be responsible for the accuracy or completeness of electronic copies of this plan sheet.

REGISTERED PROFESSIONAL ENGINEER Tien Hung Ho No. C 43990 Exp. 06/30/11 CIVIL STATE OF CALIFORNIA

T.Y. LIN / MOFFATT & NICHOL
825 BATTERY STREET
SAN FRANCISCO, CA 94111

Caltrans now has a web site! To get to the web site, go to: http://www.dot.ca.gov

LEGEND:

A TS 102x51x4.8
B TS 102x76x4.8
C W 200x31
D S 100x11
E TS 102x51x4.8 + PL
F TS 89x64x4.8
G Plate 6.4 (shown thus ▨)
H TS 102x76x6.4
30 Gal Sump location, for details see "Traveler Common Details No.8A" sheet. (2)

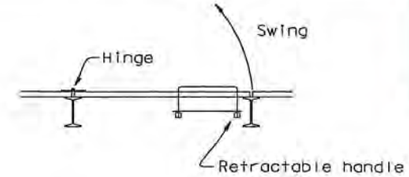

TRAP DOOR SCHEMATIC
1:10

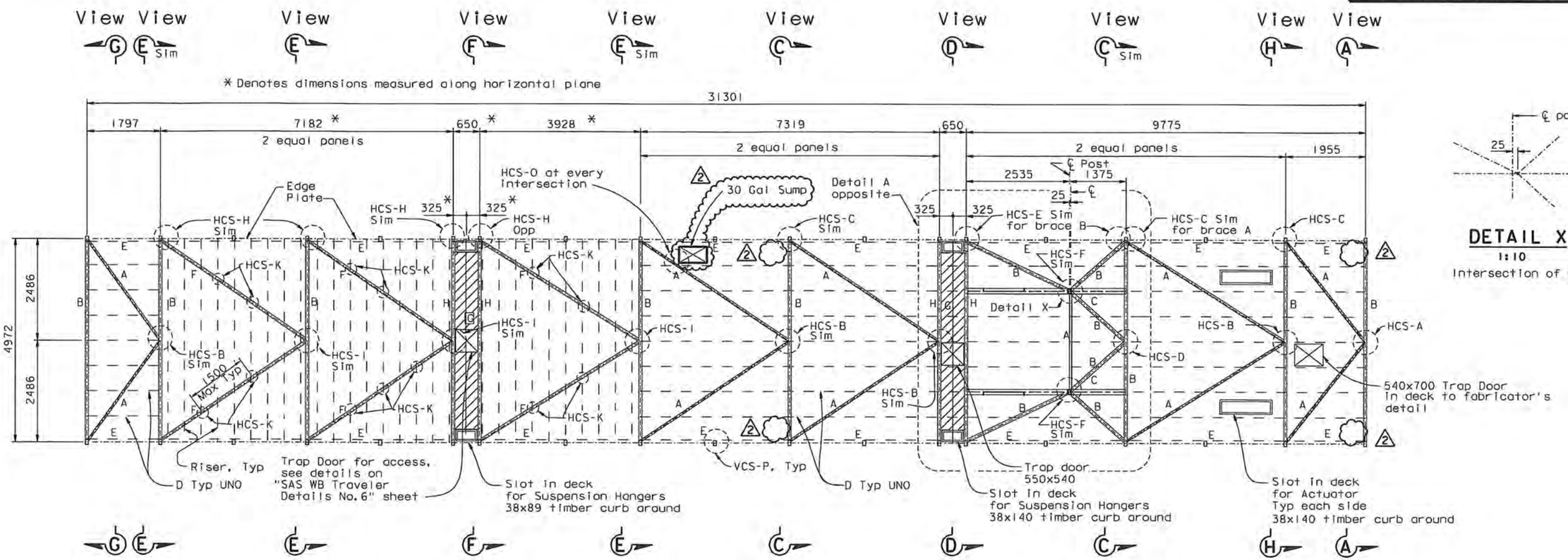

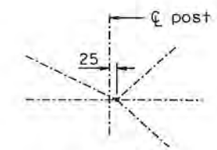

DETAIL X
1:10
Intersection of ℄'s

PLAN OF SAS-WB PLATFORM AND HORIZONTAL CONNECTION IDENTIFICATION (PLAN AT DECK LEVEL)
1:50

NOTES:

1. For Horizontal Connection Standard (HCS-XX) see HCS group of "Traveler Connection Details" sheets.
2. For Views A to G see "Traveler Common Sections" sheets.
3. For Detail A see "SAS-EB Traveler Details No.3" sheet.
4. For VCS-P, see "Traveler Connection Details No.8" sheet.
5. All splices within members shall be CJP welds. (1)
6. All tubes shall be sealed. All connections of tubes shall be welded all around to seal if no other weld is called out. End cap plates shall be placed where required.

CONTRACT CHANGE ORDER NO. 2451
SHEET 30 OF 120

REQUESTS FOR INFORMATION NOT ADDRESSED IN THIS CCO REMAIN IN FORCE

SAS WB TRAVELER TRUSS PLAN

ALL DIMENSIONS ARE IN MILLIMETERS UNLESS OTHERWISE SHOWN

R. Valizadeh/V. Toon/Y.L./W.L./F.C.
DESIGN OVERSIGHT
Roya Valizadeh / Vong Toon / Y. Liu
SIGN OFF DATE 02/12/10

MARK	DATE	DESCRIPTIONS	BY	CH'D	CCO#
2	02/12/10	TRAVELER MODIFICATIONS	JO	TH	2451
1	06/21/09	TRAVELER MODIFICATIONS	TH	AS	2451

REVISIONS

DESIGN	BY J. Otter	CHECKED T. Ho	
DETAILS	BY J. Otter	CHECKED J. Leventini	
QUANTITIES	BY J. Otter	CHECKED J. Leventini	

PREPARED FOR THE STATE OF CALIFORNIA DEPARTMENT OF TRANSPORTATION

R. Manzanarez
PROJECT ENGINEER

BRIDGE NO. 34-0006L/R
KILOMETER POST 13.2/13.9

SAN FRANCISCO OAKLAND BAY BRIDGE
EAST SPAN SEISMIC SAFETY PROJECT
SELF-ANCHORED SUSPENSION BRIDGE
(SUPERSTRUCTURE & TOWER)

SAS-WB TRAVELER DETAILS NO. 1

Rev. Date: 5-18-98

ORIGINAL SCALE IN MILLIMETERS FOR REDUCED PLANS 0 10 20 30 40 50 60 70 80 90 100

CU 04
EA 0120F1

DISREGARD PRINTS BEARING EARLIER REVISION DATES

REVISION DATES (PRELIMINARY STAGE ONLY) 01/25/02 07/29/02 12/15/02

SHEET 63IR2 OF

FILE => I:\bb\04-01200I\sas\contract plans and cco\cco\cco*2451\S-revision 02-12-10\dgn\aktrv044.dgn

100 % PS&E

USERNAME => arivero DATE PLOTTED => 19 FEB 2010 TIME PLOTTED => 08:55:15

DIST.	COUNTY	ROUTE	KILOMETER POST TOTAL PROJECT	SHEET NO.	TOTAL SHEETS
04	SF	80	13.2/13.9	1049R1	1204

REGISTERED ENGINEER - CIVIL

12-6-04
PLANS APPROVAL DATE

REGISTERED PROFESSIONAL ENGINEER Tien Hung Ho No. C 43990 Exp. 06/30/11 CIVIL STATE OF CALIFORNIA

The State of California or its officers or agents shall not be responsible for the accuracy or completeness of electronic copies of this plan sheet.

T.Y. LIN / MOFFATT & NICHOL
825 BATTERY STREET
SAN FRANCISCO, CA 94111

Caltrans now has a web site! To get to the web site, go to: http://www.dot.ca.gov

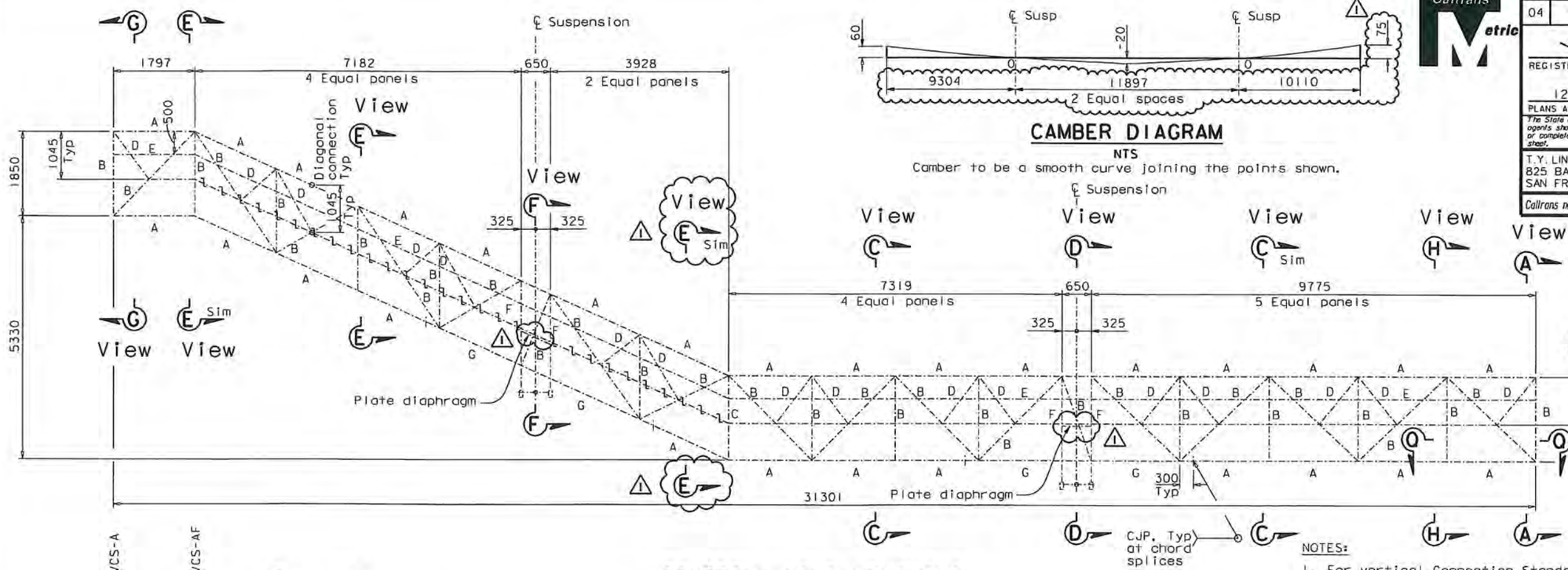
℄ Suspension
1797
7182
4 Equal panels
650
3928
2 Equal panels
View
Diagonal connection Typ
1045 Typ
1850
5330
325
325
View
View
View

DIST.	COUNTY	ROUTE	KILOMETER POST TOTAL PROJECT	SHEET NO.	TOTAL SHEETS
04	SF	80	13.2/13.9	1050R1	1204

REGISTERED ENGINEER - CIVIL

12-6-04
PLANS APPROVAL DATE

REGISTERED PROFESSIONAL ENGINEER Tien Hung Ho No. C 43990 Exp. 06/30/11 CIVIL STATE OF CALIFORNIA

The State of California or its officers or agents shall not be responsible for the accuracy or completeness of electronic copies of this plan sheet.

T.Y. LIN / MOFFATT & NICHOL
825 BATTERY STREET
SAN FRANCISCO, CA 94111

Caltrans now has a web site! To get to the web site, go to: http://www.dot.ca.gov

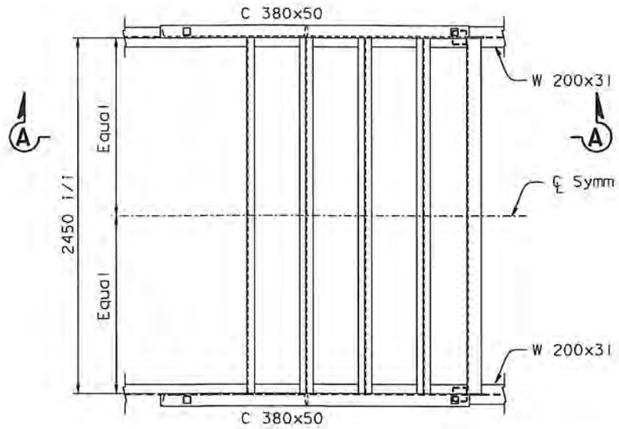

PLAN
1:20
(Grating not shown for clarity)

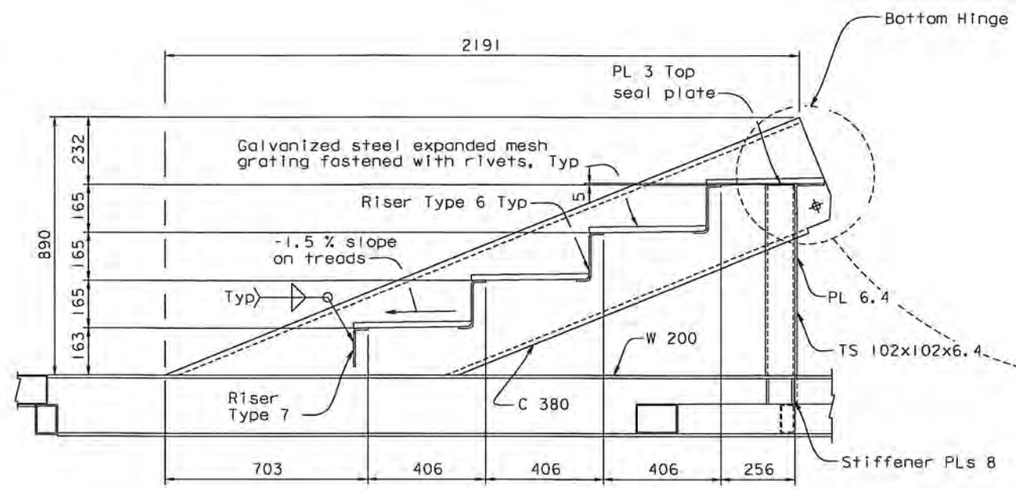

SECTION A-A
1:10

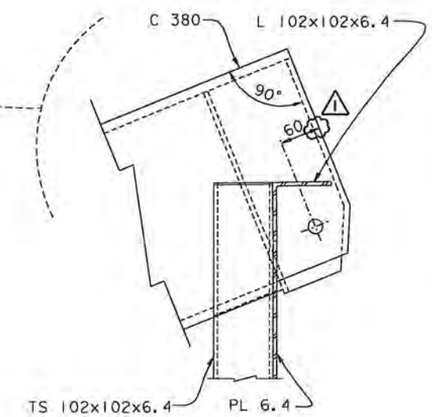

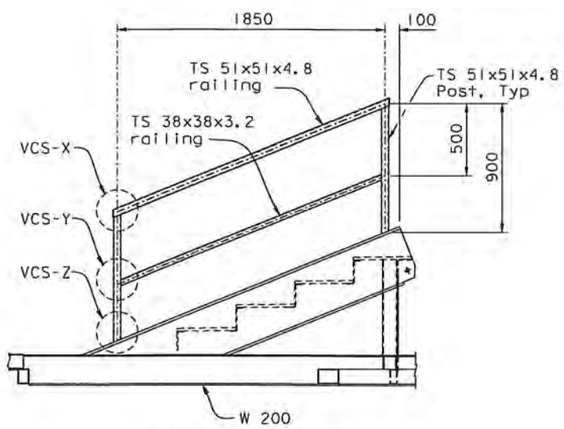

ELEVATION
1:20
ELEVATING PLATFORM FIXED END

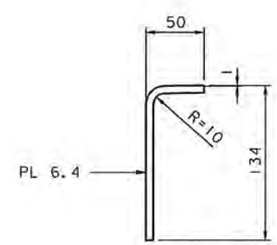

Riser Type 7

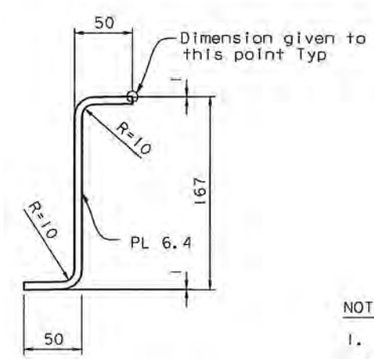

Riser Type 6

RISER PLATES
1:2.5

NOTES:

1. For Connection VCS-X, Y & Z, see "Traveler Connection Details No. 10" sheet.
2. For Bottom Hinge Details see "Traveler Common Details No. 3" sheet.
3. For expanded mesh grating, see "Traveler Common Details No. 9" sheet.

CONTRACT CHANGE ORDER NO. 24S1
SHEET 32 OF 120

REQUESTS FOR INFORMATION NOT ADDRESSED IN THIS CCO REMAIN IN FORCE

ALL DIMENSIONS ARE IN MILLIMETERS UNLESS OTHERWISE SHOWN

R. Vallizadeh/V. Toan/Y.L./W.L./F.C.
DESIGN OVERSIGHT
SIGN OFF DATE 08/21/09

MARK	DATE	REVISIONS DESCRIPTIONS	BY	CH'D	CCO#
1	08/21/09	TRAVELER MODIFICATIONS	TH	AS	24S1

DESIGN	BY J. Otter	CHECKED T. Ho
DETAILS	BY J. Otter	CHECKED J. Leventini
QUANTITIES	BY J. Otter	CHECKED J. Leventini

PREPARED FOR THE STATE OF CALIFORNIA DEPARTMENT OF TRANSPORTATION

R. Manzanarez
PROJECT ENGINEER

BRIDGE NO. 34-0006L/R
KILOMETER POST 13.2/13.9

SAN FRANCISCO OAKLAND BAY BRIDGE
EAST SPAN SEISMIC SAFETY PROJECT
SELF-ANCHORED SUSPENSION BRIDGE
(SUPERSTRUCTURE & TOWER)

SAS-WB TRAVELER DETAILS NO. 3

Rev. Date: 5-18-98

ORIGINAL SCALE IN MILLIMETERS FOR REDUCED PLANS 0 10 20 30 40 50 60 70 80 90 100

CU 04
EA 0120F1

DISREGARD PRINTS BEARING EARLIER REVISION DATES

REVISION DATES (PRELIMINARY STAGE ONLY) 01/25/02 01/29/02 12/19/02

SHEET 633R1 OF

FILE => I:\bb\04-012001\sas\contract plans and cco\cco\cco*24s1\3-revision 08-21-09\dgn\aktrv047.dgn

100 % PS&E

USERNAME => arivera DATE PLOTTED => 21 AUG 2009 TIME PLOTTED => 14:44:47

DIST.	COUNTY	ROUTE	KILOMETER POST TOTAL PROJECT	SHEET NO.	TOTAL SHEETS
04	SF	80	13.2/13.9	1051R1	1204

REGISTERED ENGINEER - CIVIL
12-6-04
PLANS APPROVAL DATE

Tien Hung Ho
No. C 43990
Exp. 06/30/11
CIVIL
STATE OF CALIFORNIA

The State of California or its officers or agents shall not be responsible for the accuracy or completeness of electronic copies of this plan sheet.

T.Y. LIN / MOFFATT & NICHOL
825 BATTERY STREET
SAN FRANCISCO, CA 94111

Caltrans now has a web site! To get to the web site, go to: http://www.dot.ca.gov

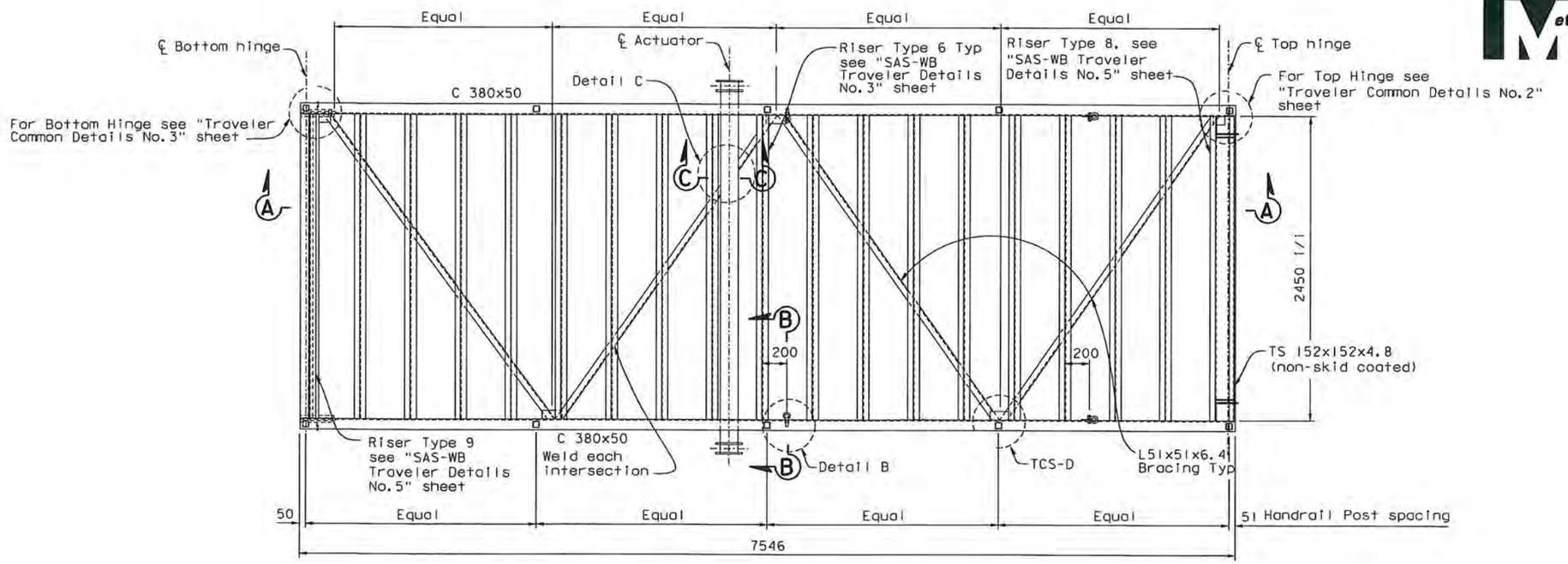

PLAN OF ELEVATING PLATFORM

1:20

(Tread material not shown for clarity)

Plan shown horizontally with platform in elevated position

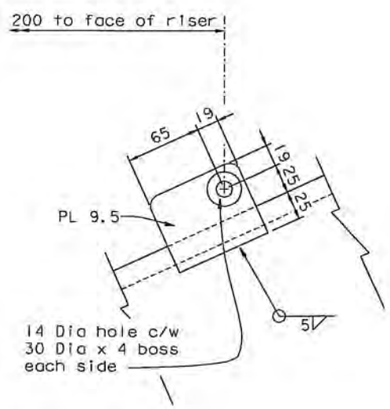

DETAIL A

1:2.5

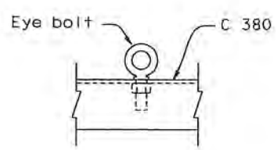

DETAIL B

1:5

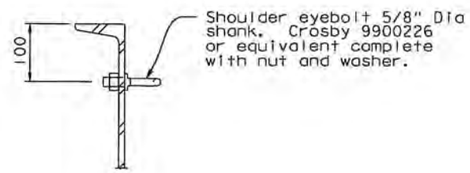

SECTION B-B

1:5

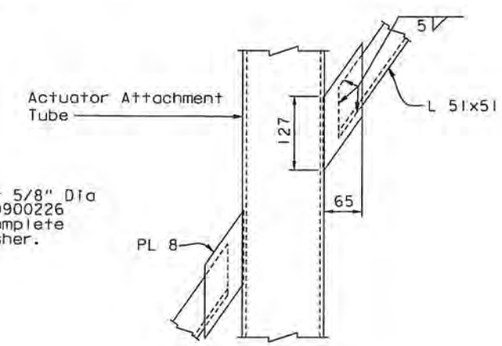

DETAIL C

1:5

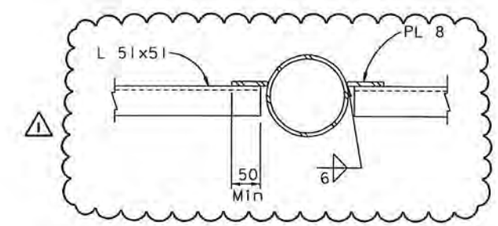

SECTION C-C

1:5

NOTES:

1. For Section A-A see "SAS-WB Traveler Details No.5" sheet.
2. For TCS-D, see "Traveler Connection Details No.1" sheet.

CONTRACT CHANGE ORDER NO. 2451
SHEET 33 OF 120

REQUESTS FOR INFORMATION NOT ADDRESSED IN THIS CCO REMAIN IN FORCE

ALL DIMENSIONS ARE IN MILLIMETERS UNLESS OTHERWISE SHOWN

R. Vaiizadeh/V. Toan/Y.L./W.L./F.C.
DESIGN OVERSIGHT
SIGN OFF DATE 08/21/09

MARK	DATE	DESCRIPTIONS	BY	CH'D	CCO#
1	08/21/09	TRAVELER MODIFICATIONS	TH	AS	2451

REVISIONS

	BY	CHECKED
DESIGN	J. Otter	T. Ho
DETAILS	J. Otter	J. Leventini
QUANTITIES	J. Otter	J. Leventini

PREPARED FOR THE STATE OF CALIFORNIA DEPARTMENT OF TRANSPORTATION

R. Manzanarez
PROJECT ENGINEER

BRIDGE NO. 34-0006L/R
KILOMETER POST 13.2/13.9

SAN FRANCISCO OAKLAND BAY BRIDGE
EAST SPAN SEISMIC SAFETY PROJECT
SELF-ANCHORED SUSPENSION BRIDGE
(SUPERSTRUCTURE & TOWER)

SAS-WB TRAVELER DETAILS NO. 4

Rev. Date: 5-18-98

ORIGINAL SCALE IN MILLIMETERS FOR REDUCED PLANS 0 10 20 30 40 50 60 70 80 90 100

CU 04
EA 0120F1

DISREGARD PRINTS BEARING EARLIER REVISION DATES

REVISION DATES (PRELIMINARY STAGE ONLY) 04/29/02 01/24/02 12/13/02

SHEET 634R1 OF

FILE => I:\bb\04-01200I\sas\contract plans and cco\cco\cco#2451\3-revision 08-21-09\dgn\aktrv048.dgn

USERNAME => ortivera DATE PLOTTED => 21 AUG 2009 TIME PLOTTED => 14:45:48

100 % PS&E

DIST.	COUNTY	ROUTE	KILOMETER POST TOTAL PROJECT	SHEET NO.	TOTAL SHEETS
04	SF	80	13.2/13.9	1052R1	1204

Caltrans Metric

REGISTERED ENGINEER - CIVIL

12-6-04
PLANS APPROVAL DATE

The State of California or its officers or agents shall not be responsible for the accuracy or completeness of electronic copies of this plan sheet.

REGISTERED PROFESSIONAL ENGINEER Tien Hung Ho No. C 43990 Exp. 06/30/11 CIVIL STATE OF CALIFORNIA

T.Y. LIN / MOFFATT & NICHOL
825 BATTERY STREET
SAN FRANCISCO, CA 94111

Caltrans now has a web site! To get to the web site, go to: http://www.dot.ca.gov

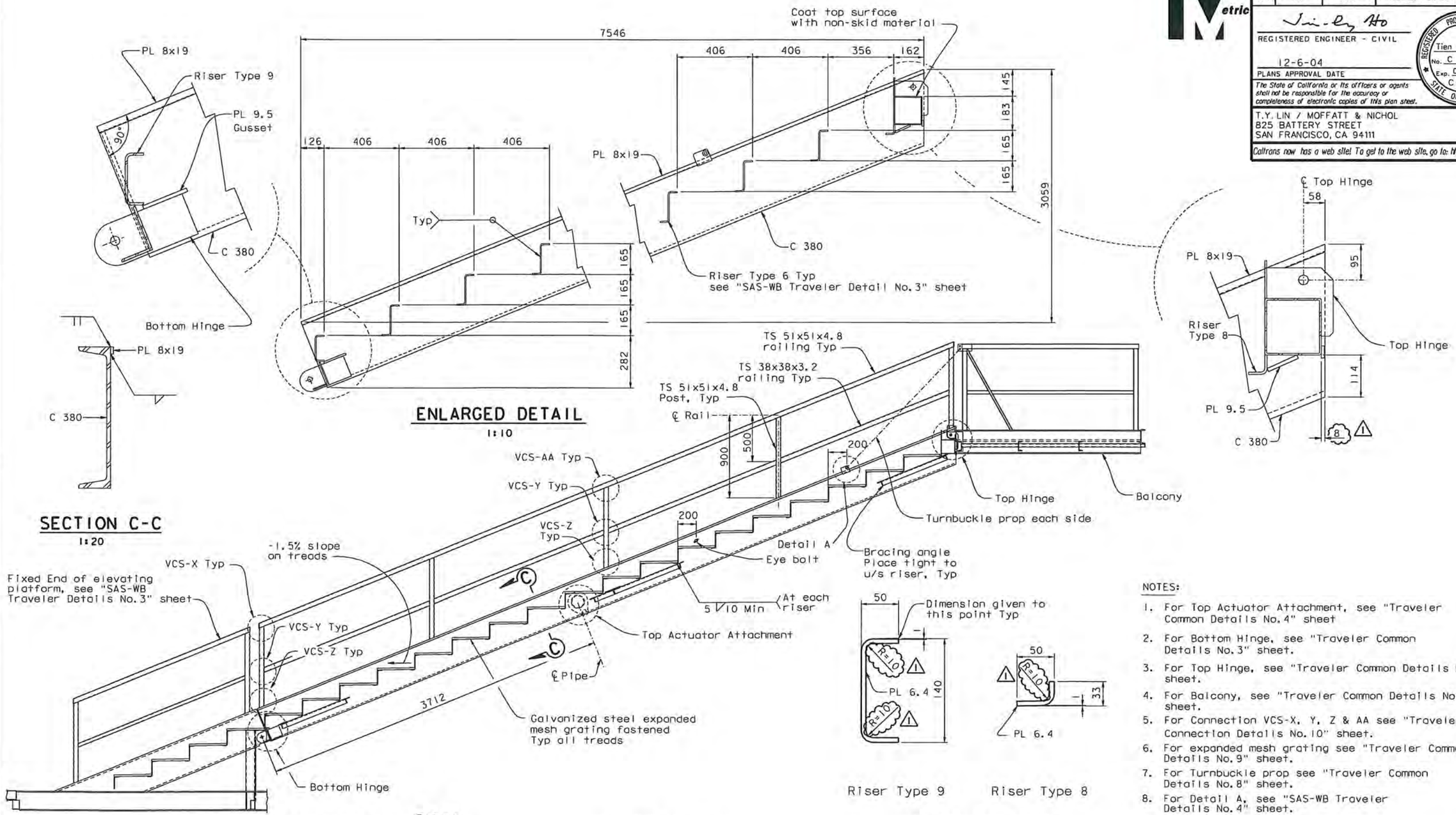

ENLARGED DETAIL
1:10

SECTION C-C
1:20

SECTION A-A
1:20

RISER PLATES
1:2.5

NOTES:

1. For Top Actuator Attachment, see "Traveler Common Details No.4" sheet
2. For Bottom Hinge, see "Traveler Common Details No.3" sheet.
3. For Top Hinge, see "Traveler Common Details No.2" sheet.
4. For Balcony, see "Traveler Common Details No.1" sheet.
5. For Connection VCS-X, Y, Z & AA see "Traveler Connection Details No.10" sheet.
6. For expanded mesh grating see "Traveler Common Details No.9" sheet.
7. For Turnbuckle prop see "Traveler Common Details No.8" sheet.
8. For Detail A, see "SAS-WB Traveler Details No.4" sheet.

CONTRACT CHANGE ORDER NO. 24S1
SHEET 34 OF 120

REQUESTS FOR INFORMATION NOT ADDRESSED IN THIS CCO REMAIN IN FORCE

ALL DIMENSIONS ARE IN MILLIMETERS UNLESS OTHERWISE SHOWN

R. Valizadeh/V. Toan/Y.L./W.L./F.C.
DESIGN OVERSIGHT
Roger Valizadeh / Vong Toan / Y. Liu
SIGN OFF DATE 08/21/09

MARK	DATE	DESCRIPTIONS	BY	CH'D	CCO#
1	08/21/09	TRAVELER MODIFICATIONS	TH	AS	24S1

REVISIONS

	BY	CHECKED
DESIGN	J. Otter	T. Ho
DETAILS	J. Otter	J. Leventini
QUANTITIES	J. Otter	J. Leventini

PREPARED FOR THE STATE OF CALIFORNIA DEPARTMENT OF TRANSPORTATION

R. Manzanarez
PROJECT ENGINEER

BRIDGE NO. 34-0006L/R
KILOMETER POST 13.2/13.9

SAN FRANCISCO OAKLAND BAY BRIDGE
EAST SPAN SEISMIC SAFETY PROJECT
SELF-ANCHORED SUSPENSION BRIDGE
(SUPERSTRUCTURE & TOWER)

SAS-WB TRAVELER DETAILS NO. 5

Rev. Date: 5-18-98

ORIGINAL SCALE IN MILLIMETERS FOR REDUCED PLANS 0 10 20 30 40 50 60 70 80 90 100

CU 04
EA 0120F1

DISREGARD PRINTS BEARING EARLIER REVISION DATES

REVISION DATES (PRELIMINARY STAGE ONLY) 04/15/02 07/01/02 12/19/02

SHEET 635R1 OF

FILE => I:\bb\04-01200I\sas\contract plans and cco\cco\cco#24s1\3-revision 08-21-09\dgn\aktrv049.dgn

100 % PS&E

USERNAME => arivera DATE PLOTTED => 21 AUG 2009 TIME PLOTTED => 14:46:49

DIST.	COUNTY	ROUTE	KILOMETER POST TOTAL PROJECT	SHEET NO.	TOTAL SHEETS
04	SF	80	13.2/13.9	1053R1	1204

Caltrans Metric

REGISTERED ENGINEER - CIVIL

12-6-04

PLANS APPROVAL DATE

The State of California or its officers or agents shall not be responsible for the accuracy or completeness of electronic copies of this plan sheet.

REGISTERED PROFESSIONAL ENGINEER Tien Hung Ho No. C 43990 Exp. 06/30/11 CIVIL STATE OF CALIFORNIA

T.Y. LIN / MOFFATT & NICHOL
825 BATTERY STREET
SAN FRANCISCO, CA 94111

Caltrans now has a web site! To get to the web site, go to: http://www.dot.ca.gov

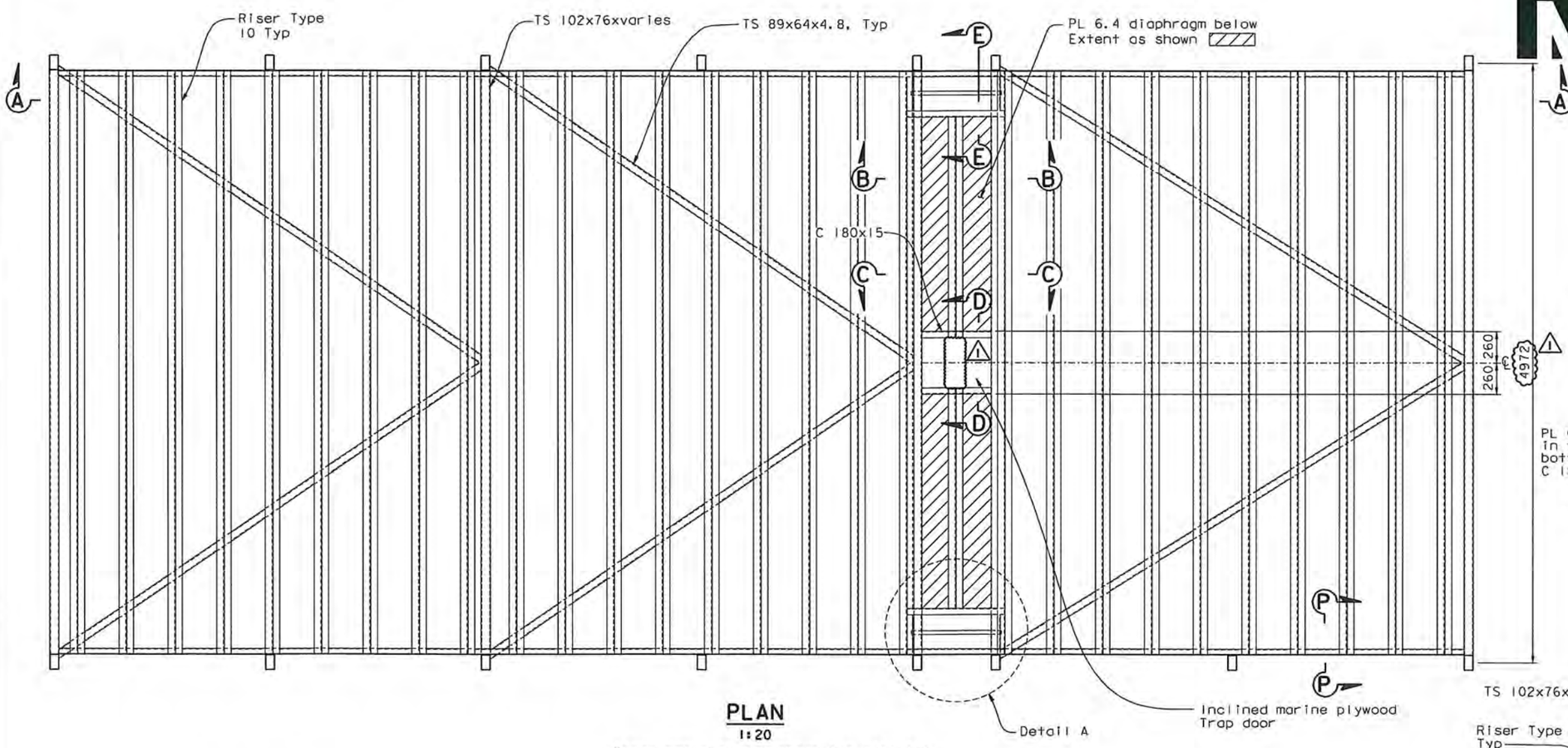

PLAN
1:20
(Tread material not shown for clarity)

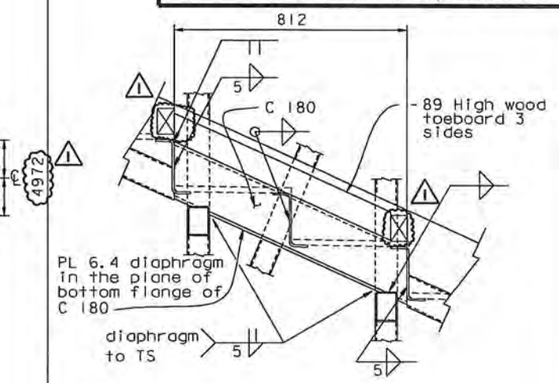

SECTION B-B
1:10

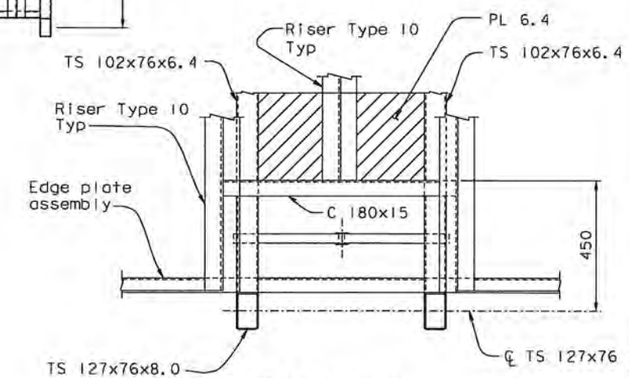

DETAIL A
1:10

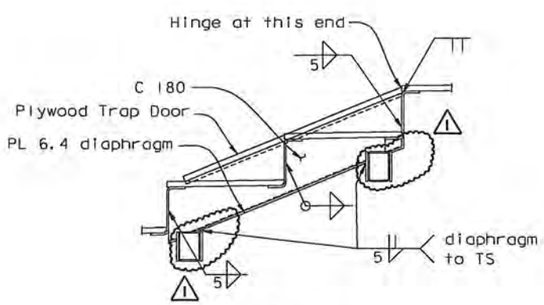

SECTION C-C
1:10

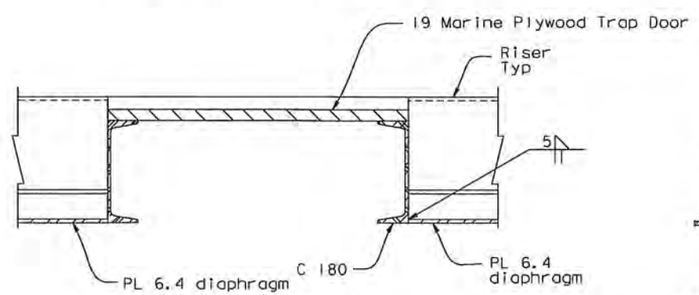

SECTION D-D
1:5

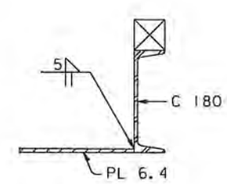

SECTION E-E
1:5

NOTES:

1. For Section A-A and P-P, see "SAS-WB Traveler Details No. 7" sheet.
2. For edge plate assembly and riser type 10, see "SAS-WB Traveler Details No. 7" sheet.

CONTRACT CHANGE ORDER NO. 24S1
SHEET 35 OF 120

REQUESTS FOR INFORMATION NOT ADDRESSED IN THIS CCO REMAIN IN FORCE

FIXED STAIR PLAN

ALL DIMENSIONS ARE IN MILLIMETERS UNLESS OTHERWISE SHOWN

SAN FRANCISCO OAKLAND BAY BRIDGE
EAST SPAN SEISMIC SAFETY PROJECT
SELF-ANCHORED SUSPENSION BRIDGE
(SUPERSTRUCTURE & TOWER)

SAS-WB TRAVELER DETAILS NO. 6

R. Valizadeh/V. Toan/Y.L./W.L./F.C.
DESIGN OVERSIGHT
SIGN OFF DATE 08/21/09

MARK	DATE	DESCRIPTIONS	BY	CH'D	CCO#
1	08/21/09	TRAVELER MODIFICATIONS	TH	AS	24S1

REVISIONS

	BY	CHECKED
DESIGN	J. Otter	T. Ho
DETAILS	J. Otter	J. Leventini
QUANTITIES	J. Otter	J. Leventini

PREPARED FOR THE STATE OF CALIFORNIA DEPARTMENT OF TRANSPORTATION

R. Manzanarez
PROJECT ENGINEER

BRIDGE NO. 34-0006L/R
KILOMETER POST 13.2/13.9

Rev. Date: 5-18-98

ORIGINAL SCALE IN MILLIMETERS FOR REDUCED PLANS 0 10 20 30 40 50 60 70 80 90 100

CU 04
EA 0120F1

DISREGARD PRINTS BEARING EARLIER REVISION DATES

REVISION DATES (PRELIMINARY STAGE ONLY) 04/15/02 01/01/02 12/19/02

SHEET 636R1 OF

FILE => I:\bb\04-012001\sas\contract plans and cco\cco\cco#24s1\3-revision 08-21-09\dgn\aktrv050.dgn

USERNAME => arivera DATE PLOTTED => 21 AUG 2009 TIME PLOTTED => 14:47:49

100 % PS&E

DIST.	COUNTY	ROUTE	KILOMETER POST TOTAL PROJECT	SHEET NO.	TOTAL SHEETS
04	SF	80	13.2/13.9	1054R1	1204

REGISTERED ENGINEER - CIVIL

12-6-04
PLANS APPROVAL DATE

REGISTERED PROFESSIONAL ENGINEER Tien Hung Ho No. C 43990 Exp. 06/30/11 CIVIL STATE OF CALIFORNIA

The State of California or its officers or agents shall not be responsible for the accuracy or completeness of electronic copies of this plan sheet.

T.Y. LIN / MOFFATT & NICHOL
825 BATTERY STREET
SAN FRANCISCO, CA 94111

Caltrans now has a web site! To get to the web site, go to: http://www.dot.ca.gov

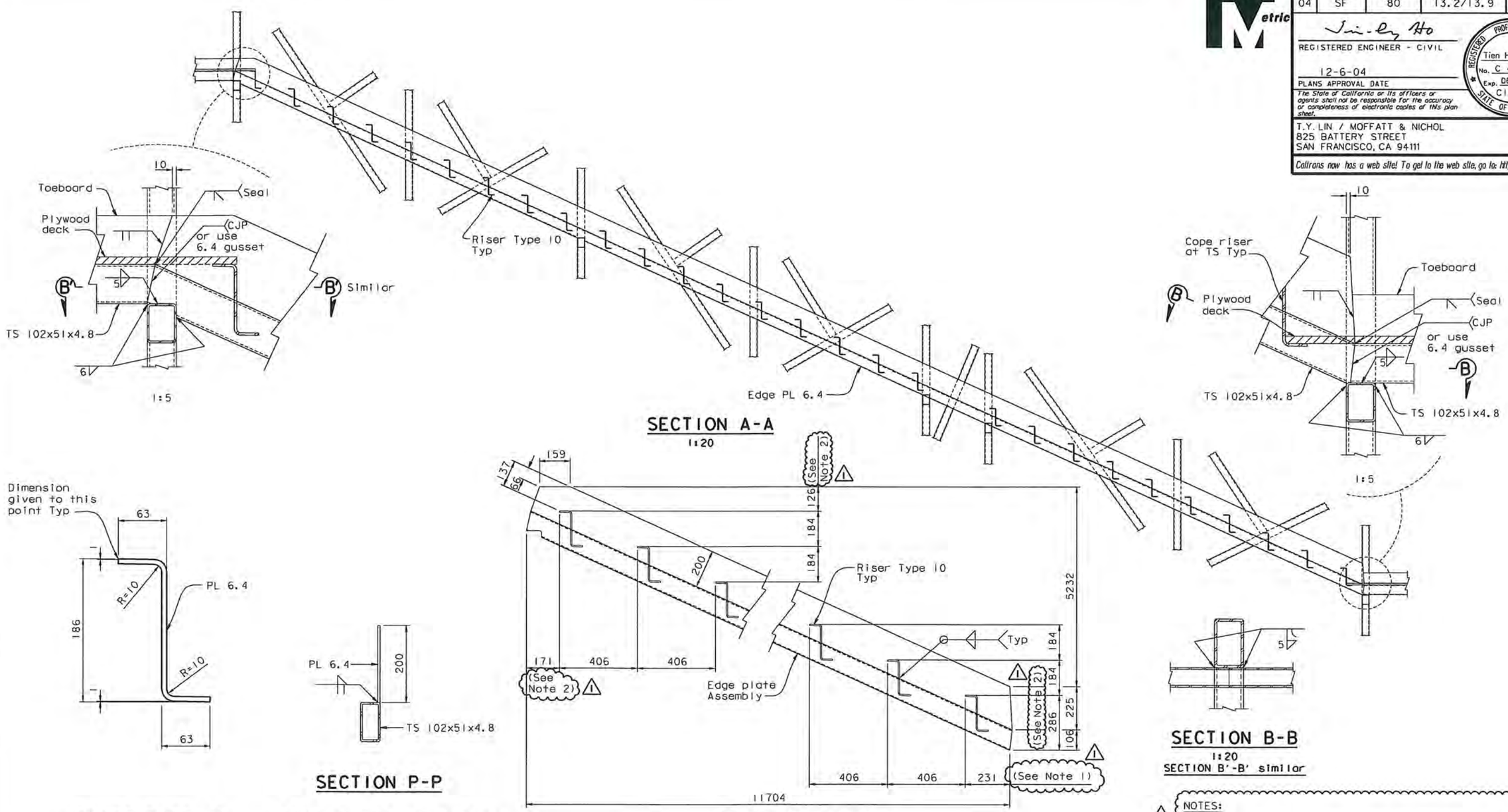

NOTES:

1. Location of first stair may be decreased by as much as 40 mm to avoid interference.
2. Dimension is dependent upon first stair location (Note 1) and shall be adjusted accordingly.

CONTRACT CHANGE ORDER NO. 24S1 FIXED STAIR SYSTEM
SHEET 36 OF 120

REQUESTS FOR INFORMATION NOT ADDRESSED IN THIS CCO REMAIN IN FORCE

ALL DIMENSIONS ARE IN MILLIMETERS UNLESS OTHERWISE SHOWN

MARK	DATE	DESCRIPTIONS	BY	CH'D	CCO#
1	08/21/09	TRAVELER MODIFICATIONS	TH	AS	24S1

REVISIONS

R. Vallizadeh/V. Toan/Y.L./W.L./F.C.
DESIGN OVERSIGHT
SIGN OFF DATE 08/21/09

Rev. Date: 5-18-98

DESIGN BY J. Otter CHECKED T. Ho
DETAILS BY J. Otter CHECKED J. Leventini
QUANTITIES BY J. Otter CHECKED J. Leventini

PREPARED FOR THE STATE OF CALIFORNIA DEPARTMENT OF TRANSPORTATION

R. Manzanarez
PROJECT ENGINEER

BRIDGE NO. 34-0006L/R
KILOMETER POST 13.2/13.9

SAN FRANCISCO OAKLAND BAY BRIDGE
EAST SPAN SEISMIC SAFETY PROJECT
SELF-ANCHORED SUSPENSION BRIDGE
(SUPERSTRUCTURE & TOWER)

SAS-WB TRAVELER DETAILS NO. 7

ORIGINAL SCALE IN MILLIMETERS FOR REDUCED PLANS 0 10 20 30 40 50 60 70 80 90 100

CU 04
EA 0120F1

DISREGARD PRINTS BEARING EARLIER REVISION DATES

REVISION DATES (PRELIMINARY STAGE ONLY) 04/25/02 07/19/02 12/19/02

SHEET 637R1 OF

FILE => I:\bb\04-012001\sas\contract plans and cco\cco\cco#24s1\3-revision 08-21-09\dgn\aktrv051.dgn

USERNAME => arivera DATE PLOTTED => 21 AUG 2009 TIME PLOTTED => 14:48:46

100 % PS&E

DIST.	COUNTY	ROUTE	KILOMETER POST TOTAL PROJECT	SHEET NO.	TOTAL SHEETS
04	SF	80	13.2/13.9	1055R3	1204

REGISTERED ENGINEER - CIVIL

12-6-04
PLANS APPROVAL DATE

The State of California or its officers or agents shall not be responsible for the accuracy or completeness of electronic copies of this plan sheet.

REGISTERED PROFESSIONAL ENGINEER — Tien Hung Ho, No. C 43990, Exp. 06/30/11, CIVIL, STATE OF CALIFORNIA

T.Y. LIN / MOFFATT & NICHOL
825 BATTERY STREET
SAN FRANCISCO, CA 94111

Caltrans now has a web site! To get to the web site, go to: http://www.dot.ca.gov

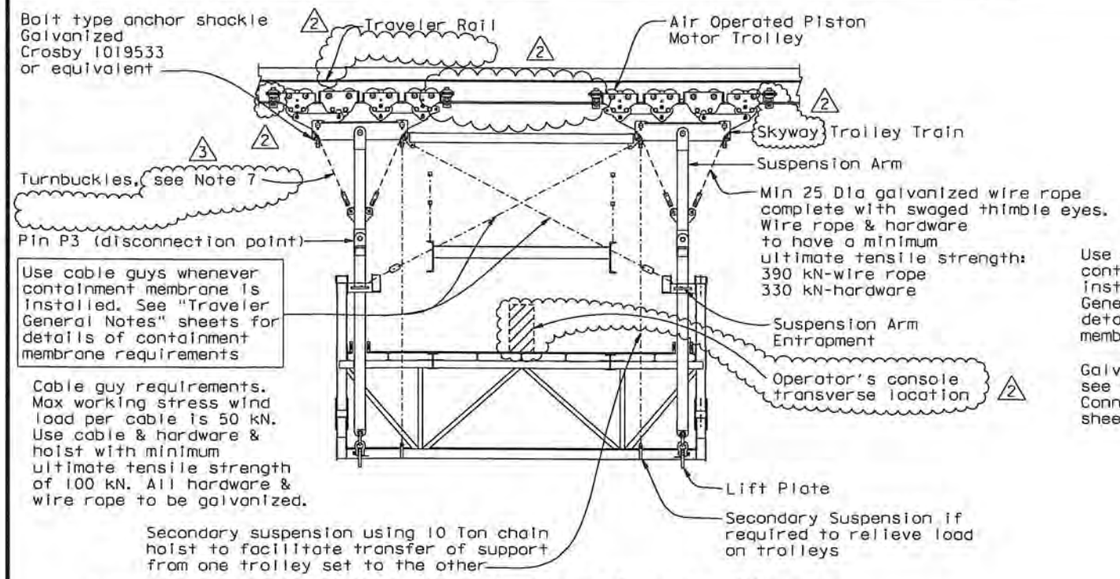

SECTION A-A - Suspension on Skyway

1:40

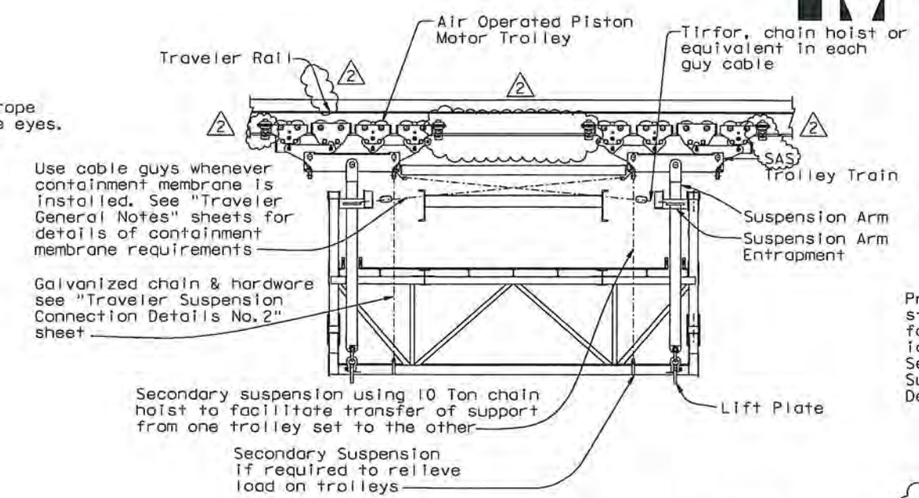

SECTION B-B - Suspension on SAS

1:40

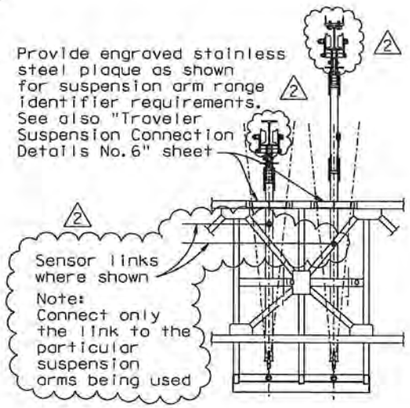

SUSPENSION ARM RANGE IDENTIFIER REQUIREMENTS

1:40

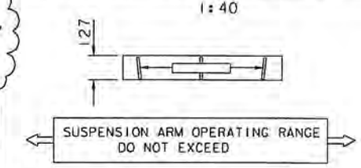

PLAQUE DETAILS AND REQUIRED TEXT

NTS

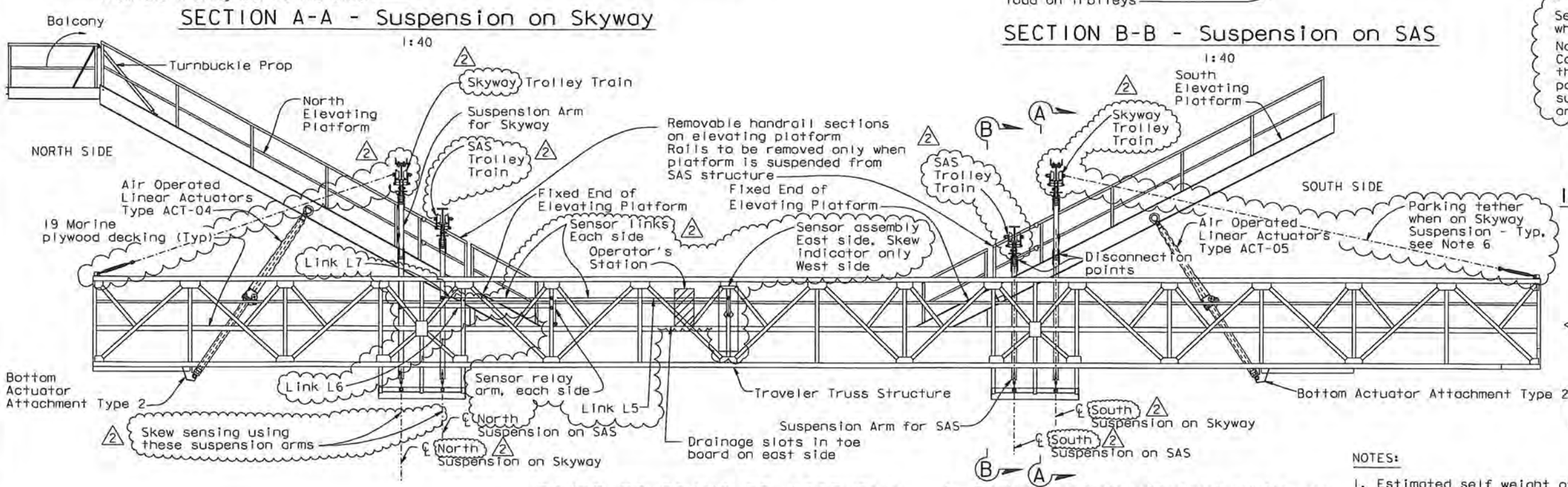

E2/E3 EB TRAVELER ASSEMBLY

1:50

4. For bottom actuator attachment details, see "Traveler Common Details" sheets.
5. For skew sensor, sensor links and skew indicator, see "Skew Sensor and Control" sheets.
6. For parking tether see "Traveler Common Details No. 9" sheet.
7. For bracing between upper suspension arms and trolley train links, use eye-eye turnbuckles, Crosby 1031653 1¼"x18" or Crosby 1031671 1¼"x24" as required by the space to be filled.

NOTES:

1. Estimated self weight of platform including suspension arms and links, excluding trolleys = 27,000 kg
2. DESIGN LOADS
   Design live load = 0.72 kPa (uniformly distributed) plus one moving load of 450 kg.
   Max. total live load on platform not to exceed = 11,000 kg
   Do not exceed this loading
2. Post this information on a stainless steel plaque at the operator's station. Plaque size 200x300 Min.
3. For linear actuators details, see "Linear Actuators And Drives" sheets.

REVISION 2 SUPERSEDES REVISION 1

CONTRACT CHANGE ORDER NO. 2451
SHEET 37 OF 120

REQUESTS FOR INFORMATION NOT ADDRESSED IN THIS CCO REMAIN IN FORCE

MARK	DATE	DESCRIPTIONS	BY	CH'D	CCO#
3	07/30/10	TRAVELER MODIFICATIONS	TH	AS	2451
2	06/19/09	TRAVELER MODIFICATIONS	TH	AS	2451
1	07/20/07	RAIL CHANGE & MISCELLANEOUS DETAILS	TH	NV	24

REVISIONS

ALL DIMENSIONS ARE IN MILLIMETERS UNLESS OTHERWISE SHOWN

R. Vaziazadeh/V. Toan/Y.L./W.L./F.C.
DESIGN OVERSIGHT
SIGN OFF DATE 07/30/10

DESIGN BY J. Otter CHECKED T. Ho
DETAILS BY J. Otter CHECKED J. Leventini
QUANTITIES BY J. Otter CHECKED J. Leventini

PREPARED FOR THE STATE OF CALIFORNIA DEPARTMENT OF TRANSPORTATION

R. Manzanarez
PROJECT ENGINEER

BRIDGE NO. 34-0006L/R
KILOMETER POST 13.2/13.9

SAN FRANCISCO OAKLAND BAY BRIDGE
EAST SPAN SEISMIC SAFETY PROJECT
SELF-ANCHORED SUSPENSION BRIDGE (SUPERSTRUCTURE & TOWER)

E2/E3 EB TRAVELER ASSEMBLY

Rev. Date: 5-18-98

ORIGINAL SCALE IN MILLIMETERS FOR REDUCED PLANS 0 10 20 30 40 50 60 70 80 90 100

CU 04
EA 0120F1

DISREGARD PRINTS BEARING EARLIER REVISION DATES

REVISION DATES (PRELIMINARY STAGE ONLY) 04/25/02 07/27/02 12/19/02

SHEET 638R3 OF

FILE => I:\bb\04-01200\sas\contract plans and cco\cco\cco#2451\9-update 07-30-10\dgn\aktrv052.dgn

USERNAME => dwinrow DATE PLOTTED => 03 AUG 2010 TIME PLOTTED => 11:37:31

100 % PS&E

DIST.	COUNTY	ROUTE	KILOMETER POST TOTAL PROJECT	SHEET NO.	TOTAL SHEETS
04	SF	80	13.2/13.9	1056R1	1204

REGISTERED ENGINEER - CIVIL

12-6-04
PLANS APPROVAL DATE

Tien Hung Ho No. C 43990 Exp. 06/03/11 CIVIL STATE OF CALIFORNIA

The State of California or its officers or agents shall not be responsible for the accuracy or completeness of electronic copies of this plan sheet.

T.Y. LIN / MOFFATT & NICHOL
825 BATTERY STREET
SAN FRANCISCO, CA 94111

Caltrans now has a web site! To get to the web site, go to: http://www.dot.ca.gov

LEGEND:

A TS 102x51x4.8
B TS 102x76x4.8
C W 200x31
D S100x11
E TS 102x51x4.8 + Plate
F TS 102x51x6.4 + Plate

⚠1 ⊠ 30 Gal Sump location, for details see "Traveler Common Details No.8A" sheet.

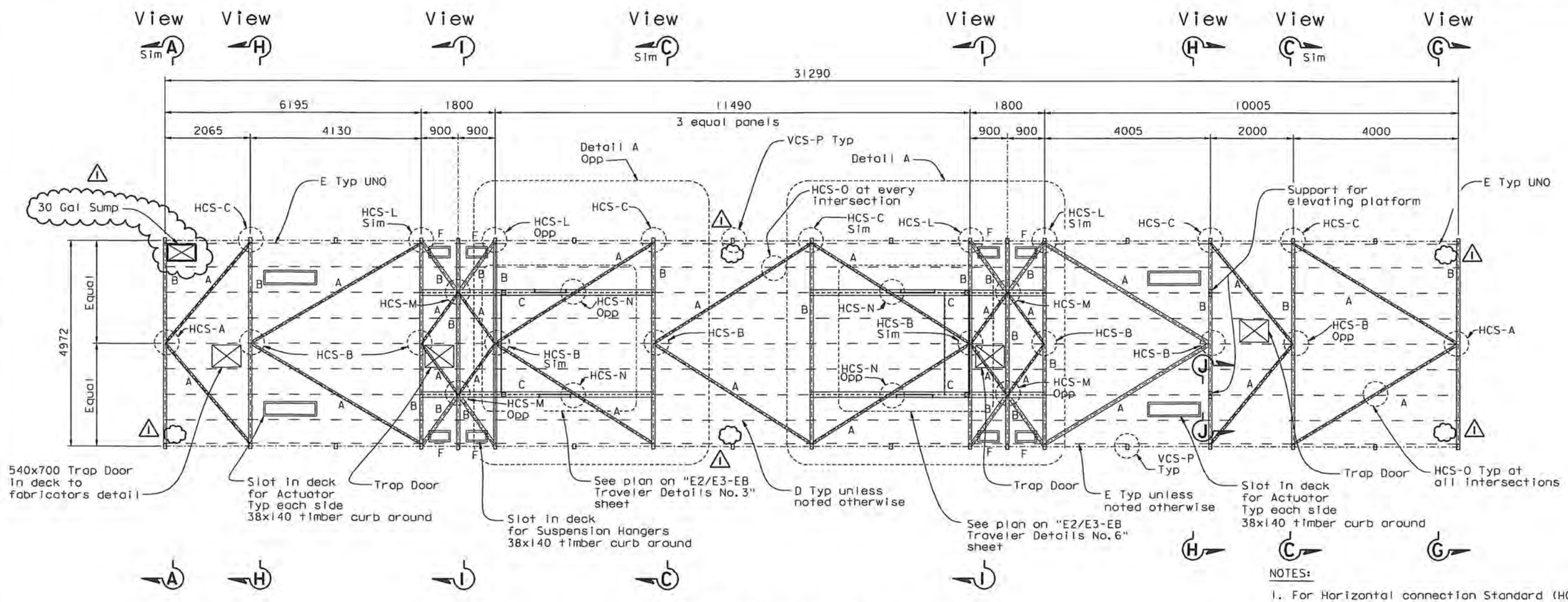

PLAN OF PLATFORM AND HORIZONTAL CONNECTION IDENTIFICATION (PLAN AT DECK LEVEL)

1:50

NOTES:

1. For Horizontal connection Standard (HCS-XX) see HCS group of "Traveler Connection Details" sheets.
2. For Views A to I see "Traveler Common Sections" sheets.
3. For Detail A see "E2/E3-EB Traveler Details No.3" sheet.
4. For Section J-J (support for elevating platform) see "E2/E3-EB Traveler Details No.8" sheet.
5. For VCS-P, see "Traveler Connection Details No.8" sheet.

CONTRACT CHANGE ORDER NO. 2451
SHEET 38 OF 120

REQUESTS FOR INFORMATION NOT ADDRESSED IN THIS CCO REMAIN IN FORCE

E2/E3 EB TRAVELER TRUSS PLAN

ALL DIMENSIONS ARE IN MILLIMETERS UNLESS OTHERWISE SHOWN

R. Vaziadeh/V. Toan/Y.L./W.L./F.C.
DESIGN OVERSIGHT
Roya Vaziadeh / Vong P. Toan / Y. Liu
SIGN OFF DATE 02/12/10

MARK	DATE	DESCRIPTIONS	BY	CH'D	CCO#
1	02/12/10	TRAVELER MODIFICATIONS	JO	TH	2451

REVISIONS

	BY	CHECKED
DESIGN	J. Otter	T. Ho
DETAILS	J. Otter	J. Leventini
QUANTITIES	J. Otter	J. Leventini

PREPARED FOR THE STATE OF CALIFORNIA DEPARTMENT OF TRANSPORTATION

R. Manzanarez
PROJECT ENGINEER

BRIDGE NO. 34-0006L/R
KILOMETER POST 13.2/13.9

CU 04
EA 0120F1

DISREGARD PRINTS BEARING EARLIER REVISION DATES

SAN FRANCISCO OAKLAND BAY BRIDGE
EAST SPAN SEISMIC SAFETY PROJECT
SELF-ANCHORED SUSPENSION BRIDGE
(SUPERSTRUCTURE & TOWER)

E2/E3-EB TRAVELER DETAILS NO. 1

REVISION DATES (PRELIMINARY STAGE ONLY) 09/09/02 01/09/03 12/19/03

SHEET 639R1 OF

Rev. Date: 5-18-98

ORIGINAL SCALE IN MILLIMETERS FOR REDUCED PLANS 0 10 20 30 40 50 60 70 80 90 100

FILE => I:\bb\04-01200I\sas\contract plans and cco\cco\cco#2451\5-revision 02-12-10\dgn\aktrv053.dgn

USERNAME => grivera DATE PLOTTED => 19 FEB 2010 TIME PLOTTED => 08:56:11

100 % PS&E

LEGEND:

A TS 152x102x4.8
B TS 152x102x8
C TS 127x76x4.8
D TS 76x51x4.8
E TS 127x76x7.9 with plates
F PL 8x51

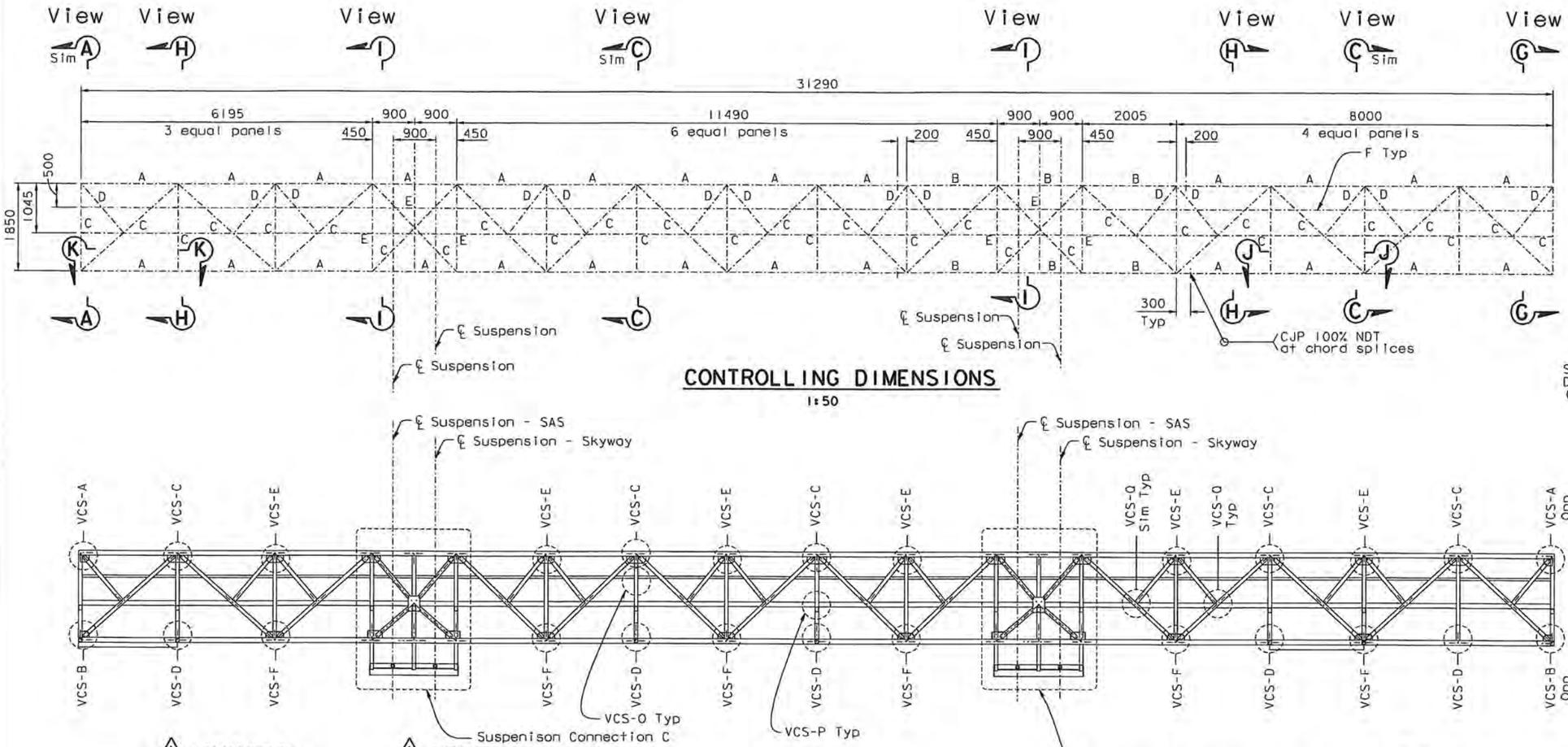

CONTROLLING DIMENSIONS

1:50

VERTICAL CONNECTION IDENTIFICATION

1:50

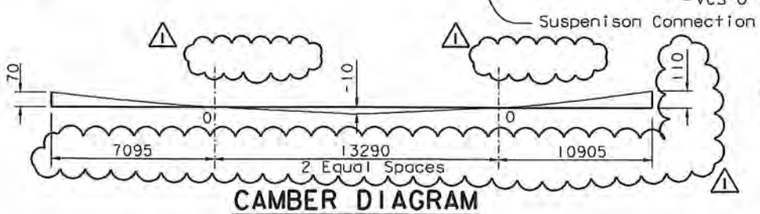

CAMBER DIAGRAM

NTS

Camber to be a smooth curve joining the points shown.

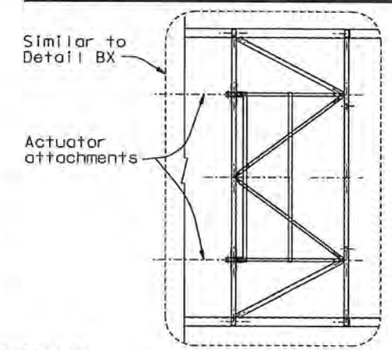

SECTION J-J

1:50
(At bottom chord)

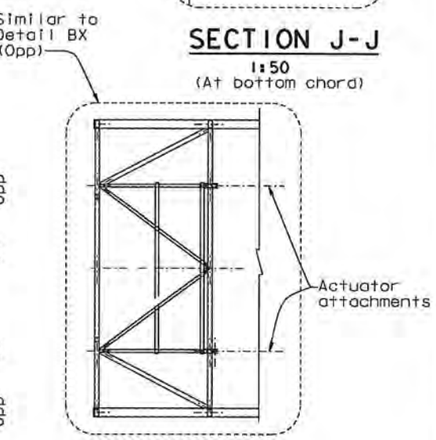

SECTION K-K

1:50
(At bottom chord)

NOTES:

1. For vertical connection Standard (VCS-XX), see VCS group of "Traveler Connection Details" sheets.
2. For Views A to I see "Traveler Common Sections" sheets.
3. For Detail BX see "Traveler Common Details No. 7" sheet.
4. For Suspension Connection C, see "Traveler Suspension Connection Details No. 3" sheet.
5. All chord splices to be CJP welded splices with 100% NDT.

CONTRACT CHANGE ORDER NO. 24S1
SHEET 39 OF 120

REQUESTS FOR INFORMATION NOT ADDRESSED IN THIS CCO REMAIN IN FORCE

E2/E3 EB TRAVELER TRUSS ELEVATION

ALL DIMENSIONS ARE IN MILLIMETERS UNLESS OTHERWISE SHOWN

DIST.	COUNTY	ROUTE	KILOMETER POST TOTAL PROJECT	SHEET NO.	TOTAL SHEETS
04	SF	80	13.2/13.9	1057R1	1204

REGISTERED ENGINEER - CIVIL
12-6-04
PLANS APPROVAL DATE

REGISTERED PROFESSIONAL ENGINEER Tien Hung Ho No. C 43990 Exp. 06/30/11 CIVIL STATE OF CALIFORNIA

The State of California or its officers or agents shall not be responsible for the accuracy or completeness of electronic copies of this plan sheet.

T.Y. LIN / MOFFATT & NICHOL
825 BATTERY STREET
SAN FRANCISCO, CA 94111

Caltrans now has a web site! To get to the web site, go to: http://www.dot.ca.gov

R. Valizadeh/V. Toan/Y.L./W.L./F.C.
DESIGN OVERSIGHT
Roger Valizadeh / Vong Toan / Y. Liu
SIGN OFF DATE 08/21/09

MARK	DATE	DESCRIPTIONS	BY	CH'D	CCO#
1	08/21/09	TRAVELER MODIFICATIONS	TH	AS	24S1

REVISIONS

	BY	CHECKED
DESIGN	J. Otter	T. Ho
DETAILS	J. Otter	J. Leventini
QUANTITIES	J. Otter	J. Leventini

PREPARED FOR THE STATE OF CALIFORNIA DEPARTMENT OF TRANSPORTATION

R. Manzanarez
PROJECT ENGINEER

BRIDGE NO. 34-0006L/R
KILOMETER POST 13.2/13.9

SAN FRANCISCO OAKLAND BAY BRIDGE
EAST SPAN SEISMIC SAFETY PROJECT
SELF-ANCHORED SUSPENSION BRIDGE
(SUPERSTRUCTURE & TOWER)

E2/E3-EB TRAVELER DETAILS NO. 2

Rev. Date: 5-18-98

ORIGINAL SCALE IN MILLIMETERS FOR REDUCED PLANS 0 10 20 30 40 50 60 70 80 90 100

CU 04
EA 0120F1

DISREGARD PRINTS BEARING EARLIER REVISION DATES

REVISION DATES (PRELIMINARY STAGE ONLY) 04/15/02 07/01/02 12/19/02

SHEET 640R1 OF

FILE => I:\bb\04-012001\sas\contract plans and cco\cco\cco#24s1\3-revision 08-21-09\dgn\aktrv054.dgn

100 % PS&E

USERNAME => arivera DATE PLOTTED => 21 AUG 2009 TIME PLOTTED => 14:49:47

DIST.	COUNTY	ROUTE	KILOMETER POST TOTAL PROJECT	SHEET NO.	TOTAL SHEETS
04	SF	80	13.2/13.9	1065R3	1204

REGISTERED ENGINEER - CIVIL

12-6-04
PLANS APPROVAL DATE

REGISTERED PROFESSIONAL ENGINEER Tien Hung Ho No. C 43990 Exp. 06/30/11 CIVIL STATE OF CALIFORNIA

The State of California or its officers or agents shall not be responsible for the accuracy or completeness of electronic copies of this plan sheet.

T.Y. LIN / MOFFATT & NICHOL
825 BATTERY STREET
SAN FRANCISCO, CA 94111

Caltrans now has a web site! To get to the web site, go to: http://www.dot.ca.gov

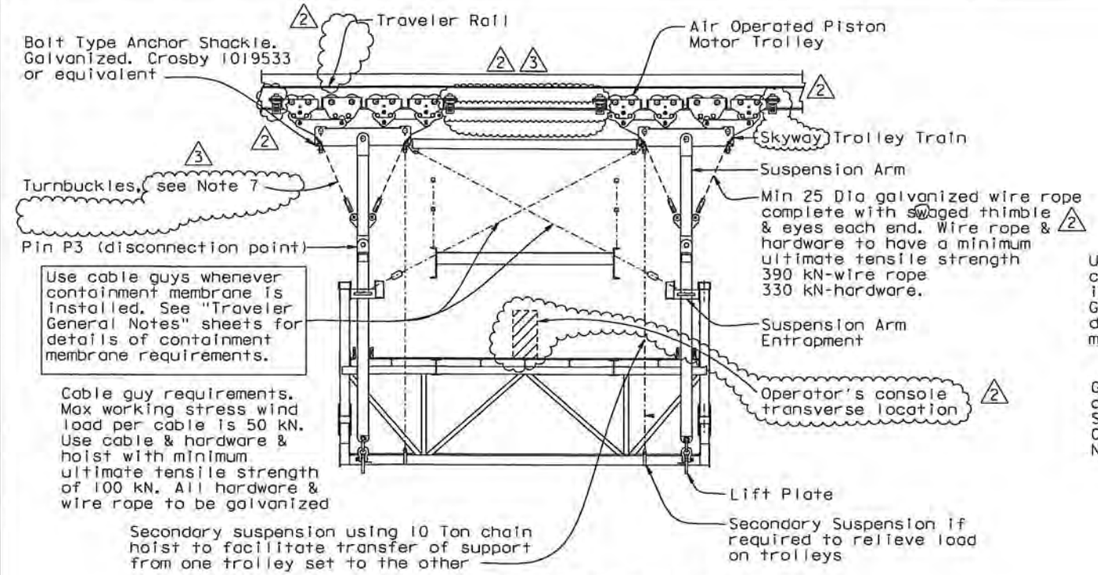

SECTION A-A SUSPENSION ON SKYWAY

1:40

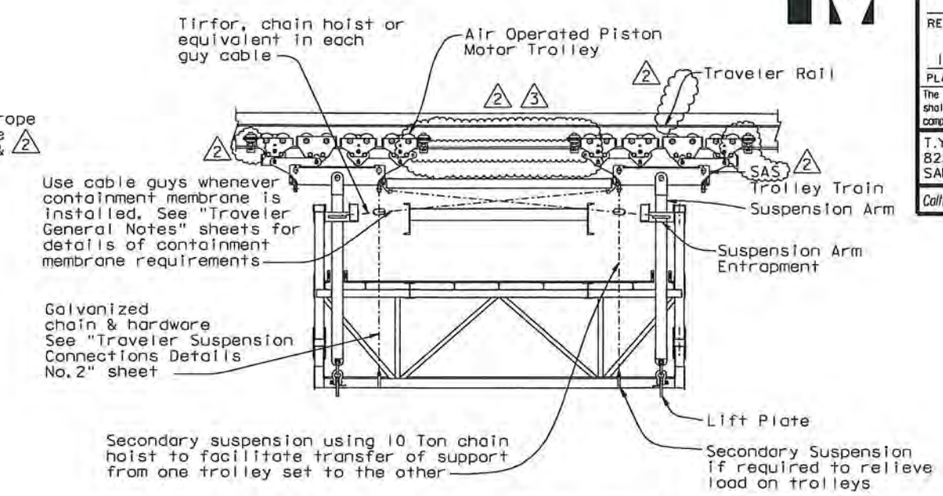

Suspension Arm Range Identifiers as for E2/E3 EB

SECTION B-B SUSPENSION ON SAS

1:40

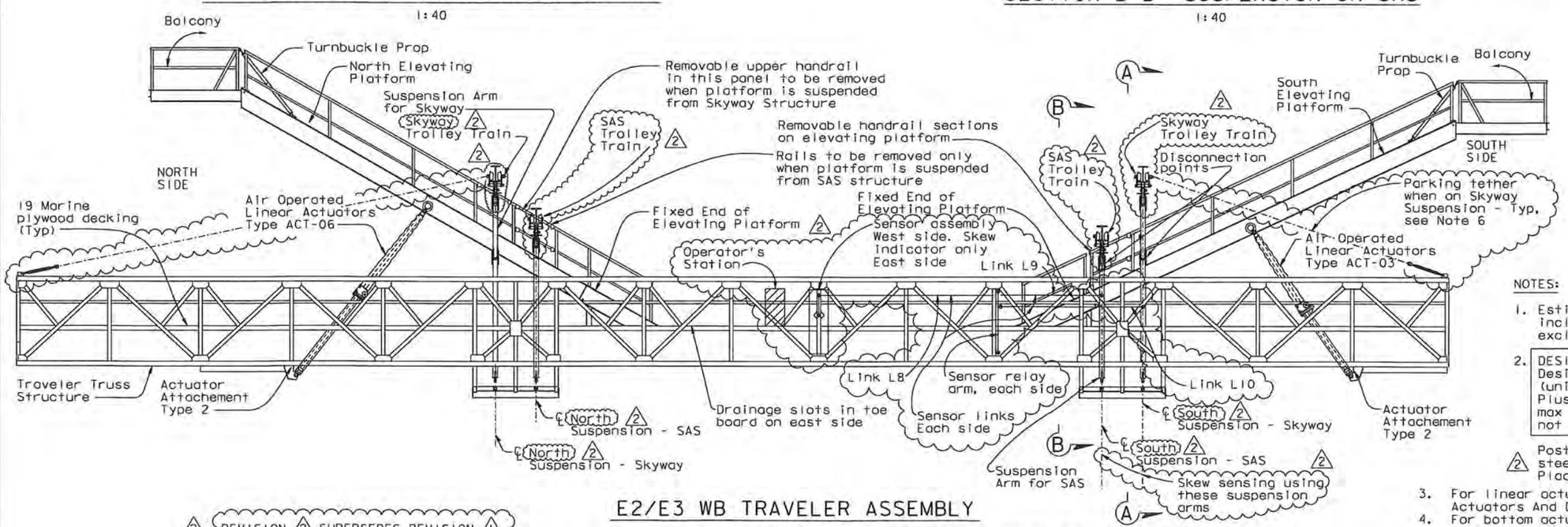

E2/E3 WB TRAVELER ASSEMBLY

1:50

NOTES:

1. Estimated self weight of platform including suspension arms and links, excluding trolleys = 27,500 kg.
2. DESIGN LOADS
   Design live load = 0.72 kPa (uniformly distributed)
   Plus one moving load of 450 kg, max total live load on platform not to exceed = 11,400 kg
2. Post this information on an stainless steel plaque at the operator's station. Plaque size 200x300 Min.
3. For linear actuators details, see "Linear Actuators And Drives" sheets.
4. For bottom actuator attachment details, see "Traveler Common Details" sheets.
2. 5. For skew sensor, sensor links and skew indicator, see "Skew Sensor and Control" sheets.
6. For parking tether details see "Traveler Common Details No. 9" sheet.
3. 7. For bracing between upper suspension arms and trolley train links, use eye-eye turnbuckles, Crosby 1031653 1¼"x18" or Crosby 1031671 1¼"x24" as required by the space to be filled.

ALL DIMENSIONS ARE IN MILLIMETERS UNLESS OTHERWISE SHOWN

2 REVISION 2 SUPERSEDES REVISION 1

CONTRACT CHANGE ORDER NO. 24S1
SHEET 40 OF 120

REQUESTS FOR INFORMATION NOT ADDRESSED IN THIS CCO REMAIN IN FORCE

MARK	DATE	DESCRIPTIONS	BY	CH'D	CCO#
3	07/30/10	TRAVELER MODIFICATIONS	TH	AS	24S1
2	06/19/09	TRAVELER MODIFICATIONS	TH	AS	24S1
1	07/20/07	RAIL CHANGE & MISCELLANEOUS DETAILS	TH	NV	24

REVISIONS

R. Vallzadeh/V. Toan/Y.L/W.L./F.C.
DESIGN OVERSIGHT
SIGN OFF DATE 07/30/10

DESIGN	BY J. Otter	CHECKED T. Ho	
DETAILS	BY J. Otter	CHECKED J. Leventini	
QUANTITIES	BY J. Otter	CHECKED J. Leventini	

PREPARED FOR THE STATE OF CALIFORNIA DEPARTMENT OF TRANSPORTATION

R. Manzanarez
PROJECT ENGINEER

BRIDGE NO. 34-0006L/R
KILOMETER POST 13.2/13.9

SAN FRANCISCO OAKLAND BAY BRIDGE
EAST SPAN SEISMIC SAFETY PROJECT
SELF-ANCHORED SUSPENSION BRIDGE
(SUPERSTRUCTURE & TOWER)

E2/E3 WB TRAVELER ASSEMBLY

Rev. Date: 5-18-98

ORIGINAL SCALE IN MILLIMETERS FOR REDUCED PLANS 0 10 20 30 40 50 60 70 80 90 100

CU 04
EA 0120F1

DISREGARD PRINTS BEARING EARLIER REVISION DATES 04/19/02 07/30/02 12/19/02

REVISION DATES (PRELIMINARY STAGE ONLY)

SHEET 648R3 OF

FILE => I:\bb\04-0120F1\sas\contract plans and cco\cco\cco#24s1\9-update 07-30-10\dgn\oktrv061.dgn

USERNAME => owtnrow DATE PLOTTED => 03 AUG 2010 TIME PLOTTED => 11:38:55

100 % PS&E

DIST.	COUNTY	ROUTE	KILOMETER POST TOTAL PROJECT	SHEET NO.	TOTAL SHEETS
04	SF	80	13.2/13.9	1066R1	1204

Caltrans Metric

REGISTERED ENGINEER - CIVIL

12-6-04
PLANS APPROVAL DATE

Tien Hung Ho
No. C 43990
Exp. 06/03/11
CIVIL
REGISTERED PROFESSIONAL ENGINEER
STATE OF CALIFORNIA

The State of California or its officers or agents shall not be responsible for the accuracy or completeness of electronic copies of this plan sheet.

T.Y. LIN / MOFFATT & NICHOL
825 BATTERY STREET
SAN FRANCISCO, CA 94111

Caltrans now has a web site! To get to the web site, go to: http://www.dot.ca.gov

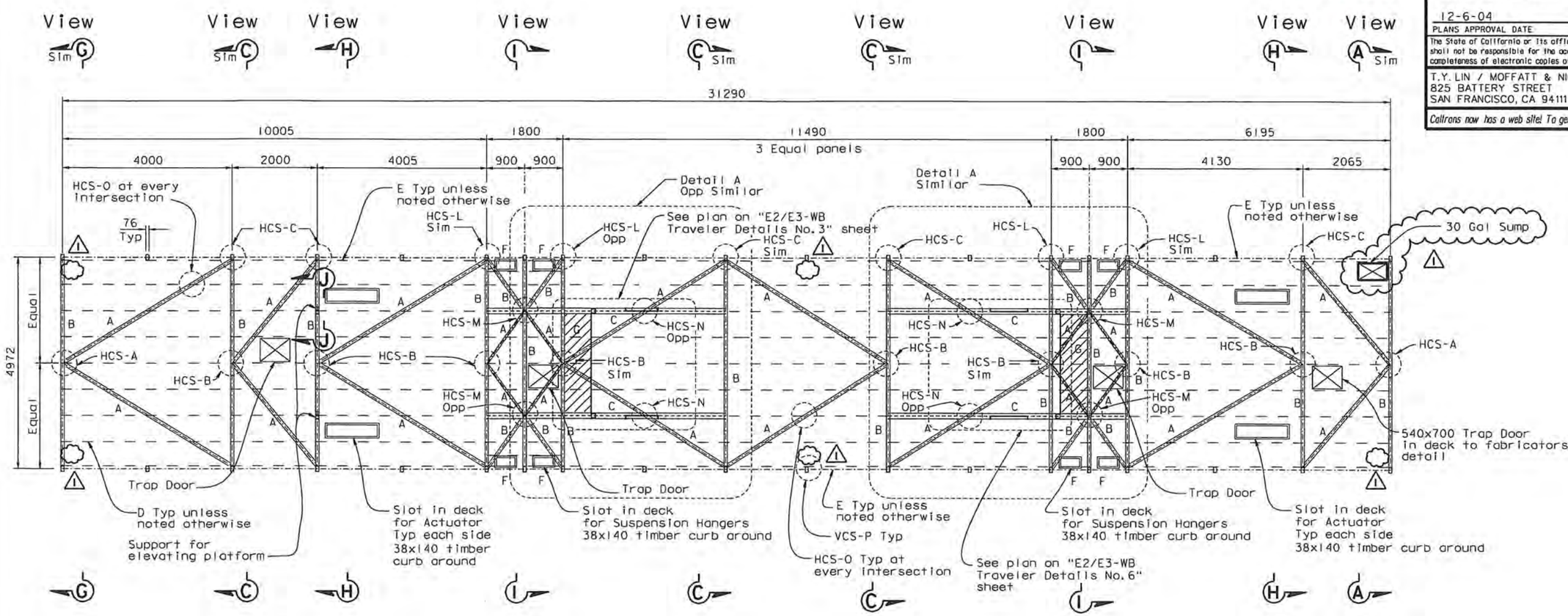

LEGEND:

A TS 102x51x4.8
B TS 102x76x4.8
C W 200x31
D S 100x11
E TS 102x51x4.8 + Plate
F TS 102x51x6.4 + Plate
G PL 6.4

30 Gal Sump location, for details see "Traveler Common Details No. 8A" sheet. (1)

PLAN OF PLATFORM AND HORIZONTAL CONNECTION IDENTIFICATION (PLAN AT DECK LEVEL)

1:50

E2/E3 WB TRAVELER TRUSS PLAN

CONTRACT CHANGE ORDER NO. 2451
SHEET 41 OF 120

REQUESTS FOR INFORMATION NOT ADDRESSED IN THIS CCO REMAIN IN FORCE

NOTES:

1. For Horizontal Connection Standard (HCS-XX) see HCS group of "Traveler Connection Details" sheets.
2. For Views A to I see "Traveler Common Sections" sheets.
3. For Detail A see "E2/E3-EB Traveler Details No. 3" sheet.
4. For Section J-J (support for elevating platform) see "E2/E3-EB Traveler Details No. 8" sheet.
5. For VCS-P, see "Traveler Connection Details No. 8" sheet.

ALL DIMENSIONS ARE IN MILLIMETERS UNLESS OTHERWISE SHOWN

MARK	DATE	DESCRIPTIONS	BY	CH'D	CCO#
1	02/12/10	TRAVELER MODIFICATIONS	JO	TH	2451

REVISIONS

R. Valizadeh/V. Toan/Y.L./W.L./F.C.
DESIGN OVERSIGHT
SIGN OFF DATE 02/12/10

DESIGN BY J. Otter CHECKED T. Ho
DETAILS BY J. Otter CHECKED J. Leventini
QUANTITIES BY J. Otter CHECKED J. Leventini

PREPARED FOR THE STATE OF CALIFORNIA DEPARTMENT OF TRANSPORTATION

R. Manzanarez
PROJECT ENGINEER

BRIDGE NO. 34-0006L/R
KILOMETER POST 13.2/13.9

SAN FRANCISCO OAKLAND BAY BRIDGE
EAST SPAN SEISMIC SAFETY PROJECT
SELF-ANCHORED SUSPENSION BRIDGE (SUPERSTRUCTURE & TOWER)

E2/E3-WB TRAVELER DETAILS NO. 1

Rev. Date: 5-18-98

ORIGINAL SCALE IN MILLIMETERS FOR REDUCED PLANS 0 10 20 30 40 50 60 70 80 90 100

CU 04
EA 0120F1

DISREGARD PRINTS BEARING EARLIER REVISION DATES

REVISION DATES (PRELIMINARY STAGE ONLY) 04/29/02 03/04/02 12/19/02

SHEET 649R1 OF

FILE => I:\bb\04-012001\sas\contract plans and cco\cco\cco#2451\5-revision 02-12-10\dgn\aktrv062.dgn

100 % PS&E

USERNAME => arivera DATE PLOTTED => 19 FEB 2010 TIME PLOTTED => 08:57:02

DIST.	COUNTY	ROUTE	KILOMETER POST TOTAL PROJECT	SHEET NO.	TOTAL SHEETS
04	SF	80	13.2/13.9	1067R1	1204

REGISTERED ENGINEER - CIVIL

12-6-04
PLANS APPROVAL DATE

REGISTERED PROFESSIONAL ENGINEER Tien Hung Ho No. C 43990 Exp. 06/30/11 CIVIL STATE OF CALIFORNIA

The State of California or its officers or agents shall not be responsible for the accuracy or completeness of electronic copies of this plan sheet.

T.Y. LIN / MOFFATT & NICHOL
825 BATTERY STREET
SAN FRANCISCO, CA 94111

Caltrans now has a web site! To get to the web site, go to: http://www.dot.ca.gov

LEGEND:

A TS 152x102x4.8
B TS 152x102x8.0
C TS 127x76x4.8
D TS 76x51x4.8
E TS 127x76x7.9 with plates
F PL 8x51

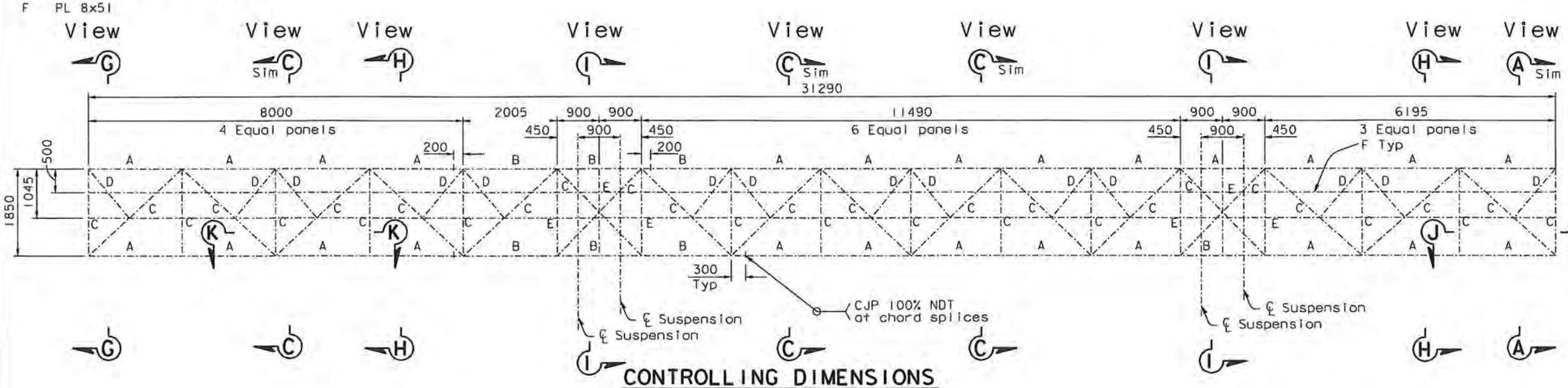

CONTROLLING DIMENSIONS

1:50

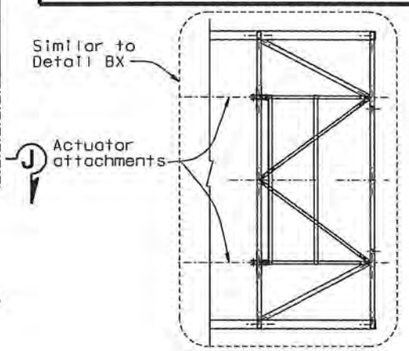

SECTION J-J

1:50
(At bottom chord)

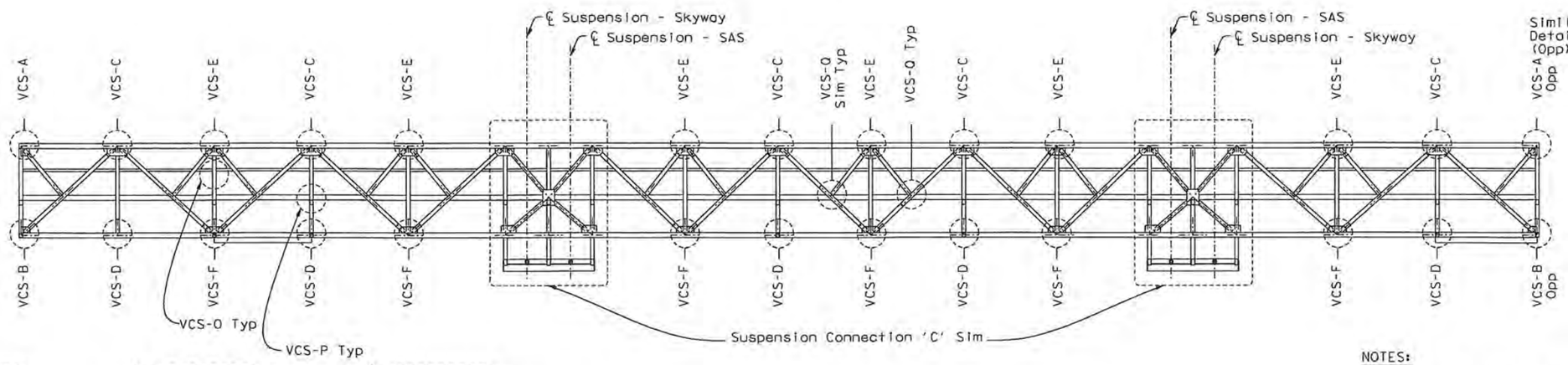

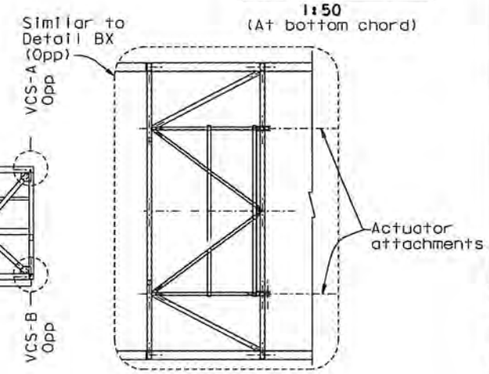

SECTION K-K

1:50
(At bottom chord)

VERTICAL CONNECTION IDENTIFICATION

1:50

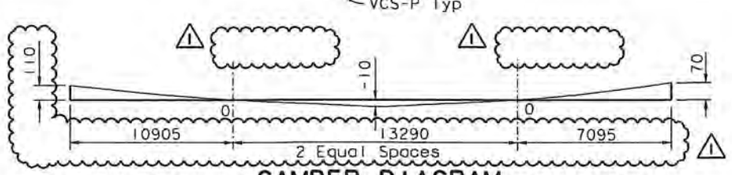

CAMBER DIAGRAM

NTS

Camber to be a smooth curve joining the points shown.

NOTES:

1. For vertical Connection Standards (VCS-XX), see VCS group of "Traveler Connection Details" sheets.
2. For Views A to I see "Traveler Common Sections" sheets.
3. For Detail B see "Traveler Common Details No.6" sheet.
4. For Detail BX see "Traveler Common Details No.7" sheet.
5. For Susupension Connection C, see "Traveler Suspension Connections Details No.3" sheet.
6. All chord splices to be CJP welded splices with 100% NDT.

CONTRACT CHANGE ORDER NO. 24S1
SHEET 42 OF 120

REQUESTS FOR INFORMATION NOT ADDRESSED IN THIS CCO REMAIN IN FORCE

E2/E3 WB TRAVELER TRUSS ELEVATION

ALL DIMENSIONS ARE IN MILLIMETERS UNLESS OTHERWISE SHOWN

MARK	DATE	DESCRIPTIONS	BY	CH'D	CCO#
1	08/21/09	TRAVELER MODIFICATIONS	TH	AS	24S1

REVISIONS

R. Vallzadeh/V. Toan/Y.L./W.L./F.C.
DESIGN OVERSIGHT
Ryan Vallzadeh / Vang P. Toan / Y. Liu
SIGN OFF DATE 08/21/09

DESIGN	BY J. Otter	CHECKED T. Ho	
DETAILS	BY J. Otter	CHECKED J. Leventini	
QUANTITIES	BY J. Otter	CHECKED J. Leventini	

PREPARED FOR THE STATE OF CALIFORNIA DEPARTMENT OF TRANSPORTATION

R. Manzanarez
PROJECT ENGINEER

BRIDGE NO. 34-0006L/R
KILOMETER POST 13.2/13.9

SAN FRANCISCO OAKLAND BAY BRIDGE
EAST SPAN SEISMIC SAFETY PROJECT
SELF-ANCHORED SUSPENSION BRIDGE
(SUPERSTRUCTURE & TOWER)

E2/E3-WB TRAVELER DETAILS NO. 2

Rev. Date: 5-18-98

ORIGINAL SCALE IN MILLIMETERS FOR REDUCED PLANS 0 10 20 30 40 50 60 70 80 90 100

CU 04
EA 0120F1

DISREGARD PRINTS BEARING EARLIER REVISION DATES 04/29/02 01/24/02 12/19/02

REVISION DATES (PRELIMINARY STAGE ONLY)

SHEET 650R1 OF

FILE => I:\bb\04-01200I\sas\contract plans and cco\cco\cco#24s1\3-revision 08-21-09\dgn\aktrv063.dgn

USERNAME => arivera DATE PLOTTED => 21 AUG 2009 TIME PLOTTED => 14:50:52

100 % PS&E

DIST.	COUNTY	ROUTE	KILOMETER POST TOTAL PROJECT	SHEET NO.	TOTAL SHEETS
04	SF	80	13.2/13.9	1074R1	1204

Caltrans Metric

REGISTERED ENGINEER - CIVIL

12-6-04
PLANS APPROVAL DATE

REGISTERED PROFESSIONAL ENGINEER Bashkim Prishtina No. C 053561 Exp. 6/30/11 CIVIL STATE OF CALIFORNIA

The State of California or its officers or agents shall not be responsible for the accuracy or completeness of electronic copies of this plan sheet.

T.Y. LIN / MOFFATT & NICHOL
825 BATTERY STREET
SAN FRANCISCO, CA 94111

Caltrans now has a web site! To get to the web site, go to: http://www.dot.ca.gov

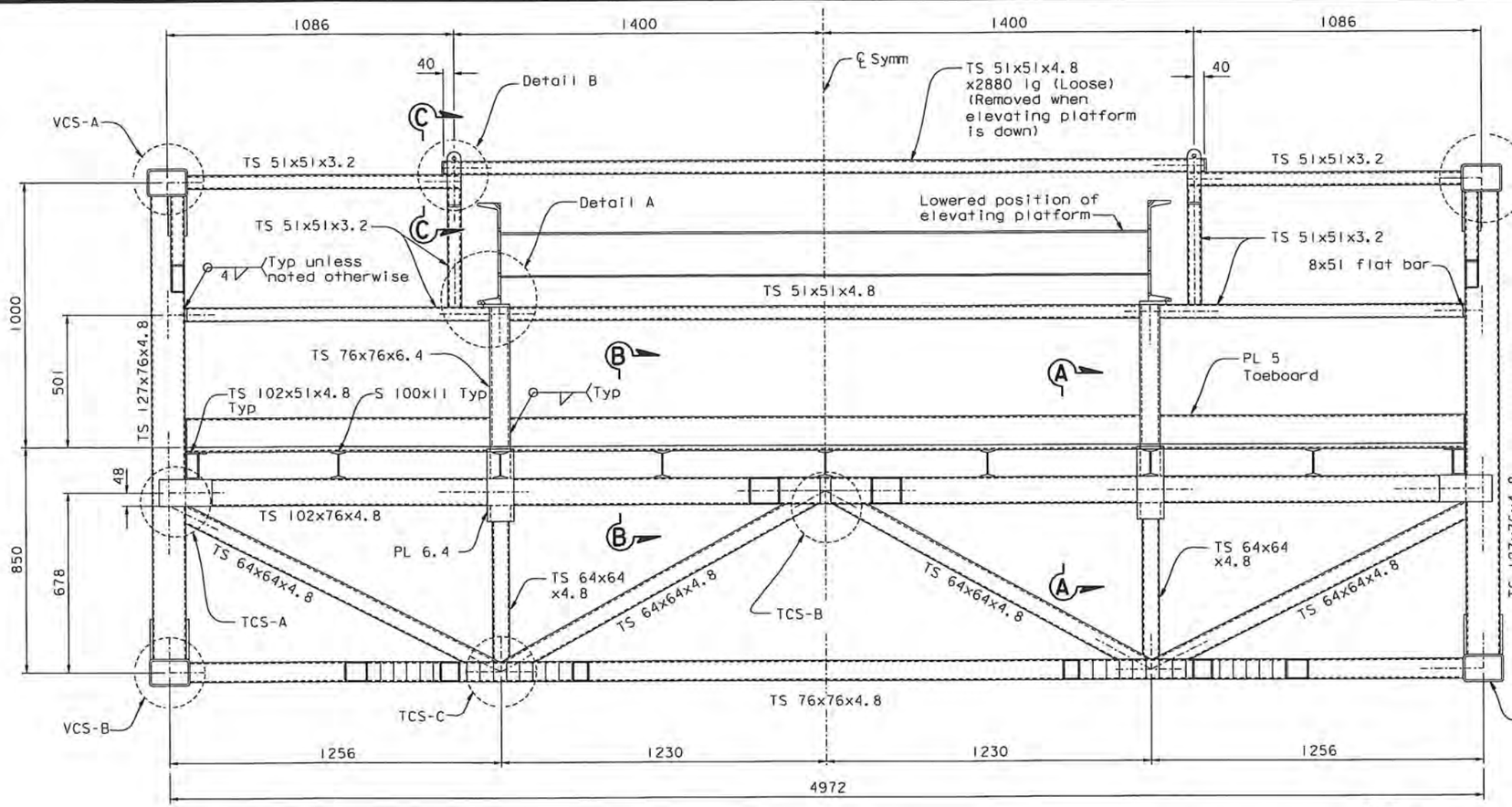

VIEW A
1:10

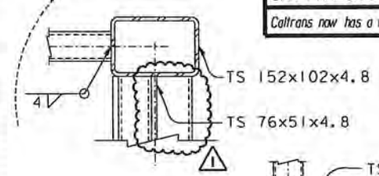

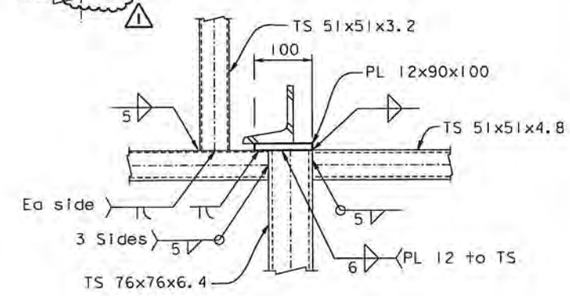

DETAIL A
1:5

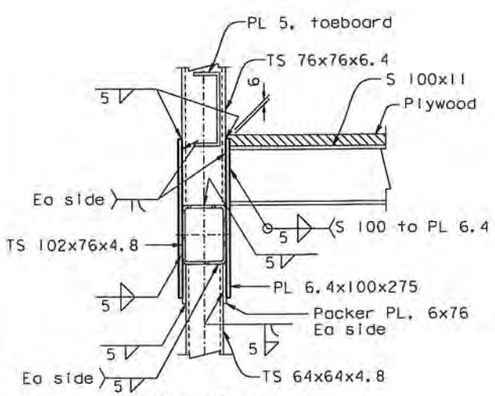

SECTION A-A
1:5

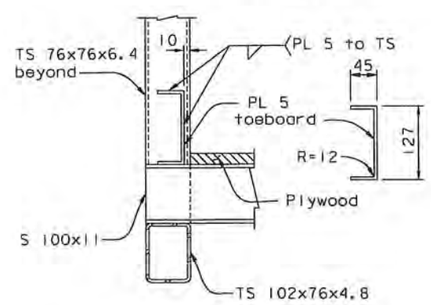

SECTION B-B
1:5

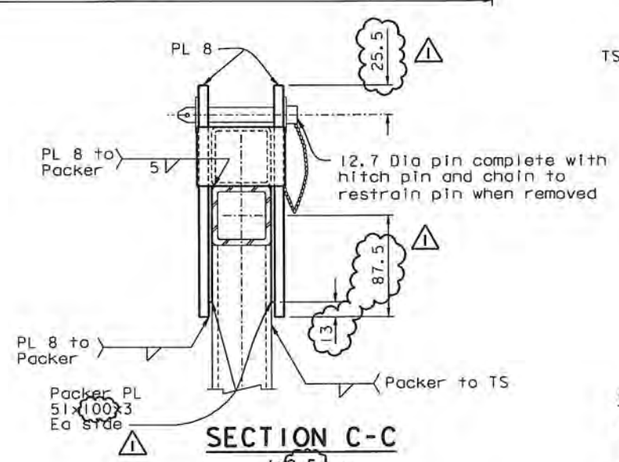

SECTION C-C
1:2.5

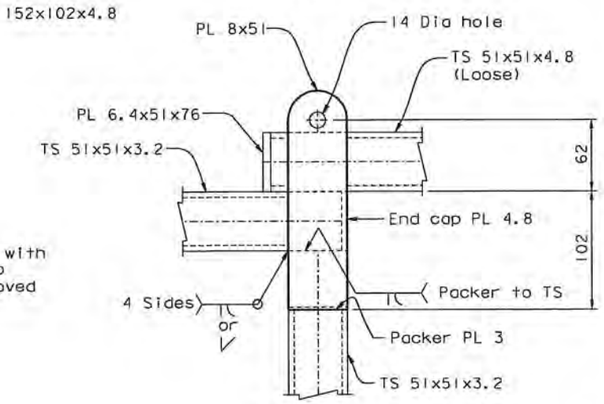

DETAIL B
1:2.5

NOTES:

1. For weld details not shown see "Traveler Connection Details" sheets.
2. For VCS-XX & TCS-XX details, see "Traveler Connection Details" sheet.

CONTRACT CHANGE ORDER NO. 24S1
SHEET 43 OF 120

REQUESTS FOR INFORMATION NOT ADDRESSED IN THIS CCO REMAIN IN FORCE

ALL DIMENSIONS ARE IN MILLIMETERS UNLESS OTHERWISE SHOWN

R. Vallizadeh/V. Toan/Y.L./W.L./F.C.
DESIGN OVERSIGHT
SIGN OFF DATE 06/19/09

MARK	DATE	DESCRIPTIONS	BY	CH'D	CCO#
1	06/19/09	TRAVELER MODIFICATIONS	BP	AS	24S1

REVISIONS

DESIGN	BY J. Otter	CHECKED B. Prishtina	
DETAILS	BY J. Otter	CHECKED M. Roberts	
QUANTITIES	BY J. Otter	CHECKED M. Roberts	

PREPARED FOR THE STATE OF CALIFORNIA DEPARTMENT OF TRANSPORTATION

R. Manzanarez
PROJECT ENGINEER

BRIDGE NO. 34-0006L/R
KILOMETER POST 13.2/13.9

SAN FRANCISCO OAKLAND BAY BRIDGE
EAST SPAN SEISMIC SAFETY PROJECT
SELF-ANCHORED SUSPENSION BRIDGE
(SUPERSTRUCTURE & TOWER)

TRAVELER COMMON SECTIONS NO. 1

Rev. Date: 5-18-98

ORIGINAL SCALE IN MILLIMETERS FOR REDUCED PLANS 0 10 20 30 40 50 60 70 80 90 100

CU 04
EA 0120F1

DISREGARD PRINTS BEARING EARLIER REVISION DATES 04/17/02 01/07/02 12/13/02

REVISION DATES (PRELIMINARY STAGE ONLY)

SHEET 657R1 OF

FILE => I:\bb\04-012001\sas\contract plans and cco\cco\cco#24s1\2-revision 06-19-09\dgn\aktrv070.dgn

100 % PS&E

USERNAME => dwinrow DATE PLOTTED => 17 JUN 2009 TIME PLOTTED => 10:05:35

DIST.	COUNTY	ROUTE	KILOMETER POST TOTAL PROJECT	SHEET NO.	TOTAL SHEETS
04	SF	80	13.2/13.9	1076R1	1204

Caltrans Metric

Boshkim Prishtina
REGISTERED ENGINEER - CIVIL

12-6-04
PLANS APPROVAL DATE

REGISTERED PROFESSIONAL ENGINEER Boshkim Prishtina No. C 053561 Exp. 6/30/11 CIVIL STATE OF CALIFORNIA

The State of California or its officers or agents shall not be responsible for the accuracy or completeness of electronic copies of this plan sheet.

T.Y. LIN / MOFFATT & NICHOL
825 BATTERY STREET
SAN FRANCISCO, CA 94111

Caltrans now has a web site! To get to the web site, go to: http://www.dot.ca.gov

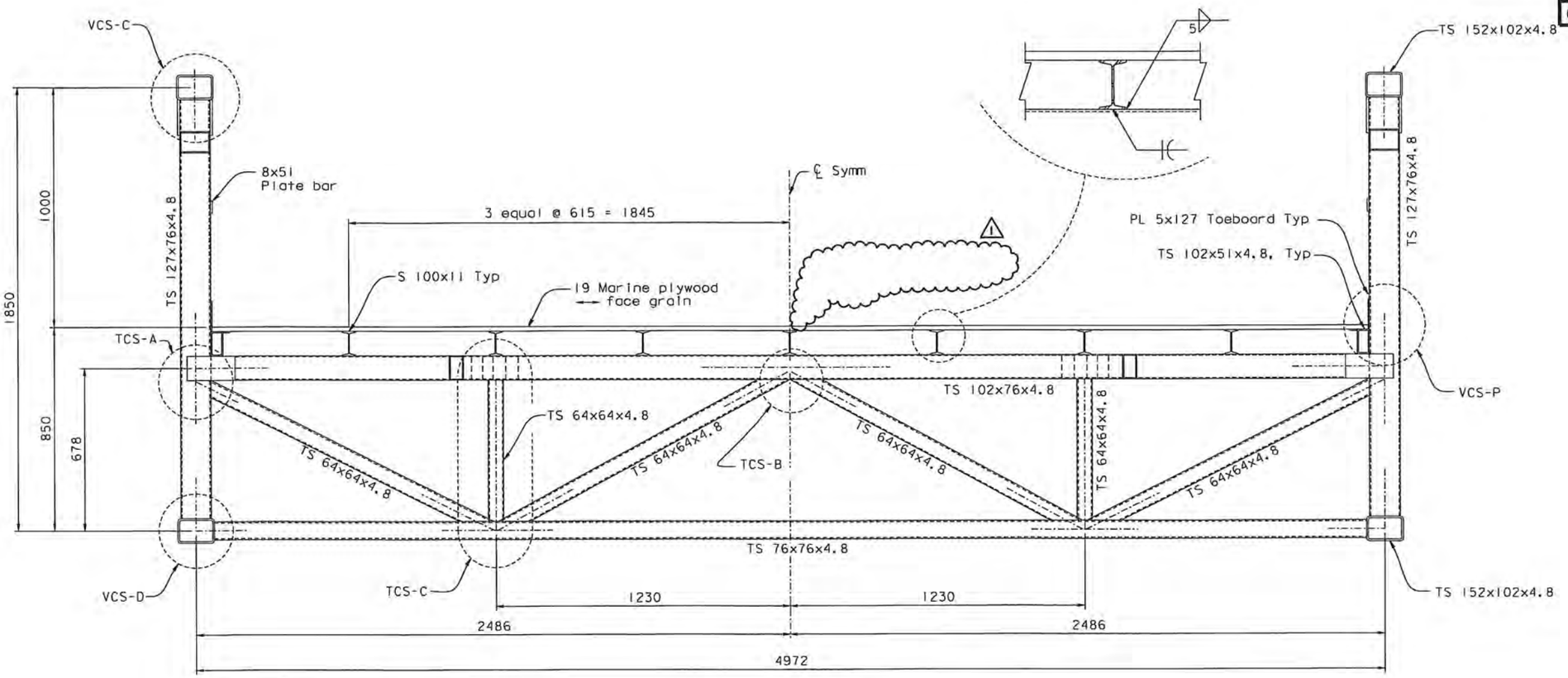

VIEW-C
1:10

NOTES:

1. For weld details not shown, see "Traveler Connection Details" sheets.
2. For TCS-XX and VCS-XX, see "Traveler Connection Details" sheets.

CONTRACT CHANGE ORDER NO. 24S1
SHEET 44 OF 120

REQUESTS FOR INFORMATION NOT ADDRESSED IN THIS CCO REMAIN IN FORCE

ALL DIMENSIONS ARE IN MILLIMETERS UNLESS OTHERWISE SHOWN

R. Vaiizadeh/V. Toan/Y.L./W.L./F.C.
DESIGN OVERSIGHT
Roya Valizadeh / Vong Toan / Y. Liu
SIGN OFF DATE 08/21/09

MARK	DATE	DESCRIPTIONS	BY	CH'D	CCO#
1	08/21/09	TRAVELER MODIFICATION	BP	JD	24S1

REVISIONS

	BY	CHECKED
DESIGN	J. Otter	K. Prishtina
DETAILS	J. Otter	M. Roberts
QUANTITIES	J. Otter	M. Roberts

PREPARED FOR THE STATE OF CALIFORNIA DEPARTMENT OF TRANSPORTATION

R. Manzanarez
PROJECT ENGINEER

BRIDGE NO. 34-0006L/R
KILOMETER POST 13.2/13.9

SAN FRANCISCO OAKLAND BAY BRIDGE
EAST SPAN SEISMIC SAFETY PROJECT
SELF-ANCHORED SUSPENSION BRIDGE
(SUPERSTRUCTURE & TOWER)

TRAVELER COMMON SECTIONS NO. 3

Rev. Date: 5-18-98

ORIGINAL SCALE IN MILLIMETERS FOR REDUCED PLANS 0 10 20 30 40 50 60 70 80 90 100

CU 04
EA 0120F1

DISREGARD PRINTS BEARING EARLIER REVISION DATES
REVISION DATES (PRELIMINARY STAGE ONLY) 04/18/02 01/10/03 12/19/02

SHEET 659R1 OF

FILE => I:\bb\04-01200I\sas\contract plans and cco\cco\cco#24s1\3-revision 08-21-09\dgn\aktrv072.dgn

100 % PS&E

USERNAME => arivera DATE PLOTTED => 21 AUG 2009 TIME PLOTTED => 14:52:12

DIST.	COUNTY	ROUTE	KILOMETER POST TOTAL PROJECT	SHEET NO.	TOTAL SHEETS
04	SF	80	13.2/13.9	1077R2	1204

Caltrans Metric

REGISTERED ENGINEER - CIVIL

12-6-04
PLANS APPROVAL DATE

REGISTERED PROFESSIONAL ENGINEER Boshkim Prishtina No. C 053561 Exp. 6/30/11 CIVIL STATE OF CALIFORNIA

The State of California or its officers or agents shall not be responsible for the accuracy or completeness of electronic copies of this plan sheet.

T.Y. LIN / MOFFATT & NICHOL
825 BATTERY STREET
SAN FRANCISCO, CA 94111

Caltrans now has a web site! To get to the web site, go to: http://www.dot.ca.gov

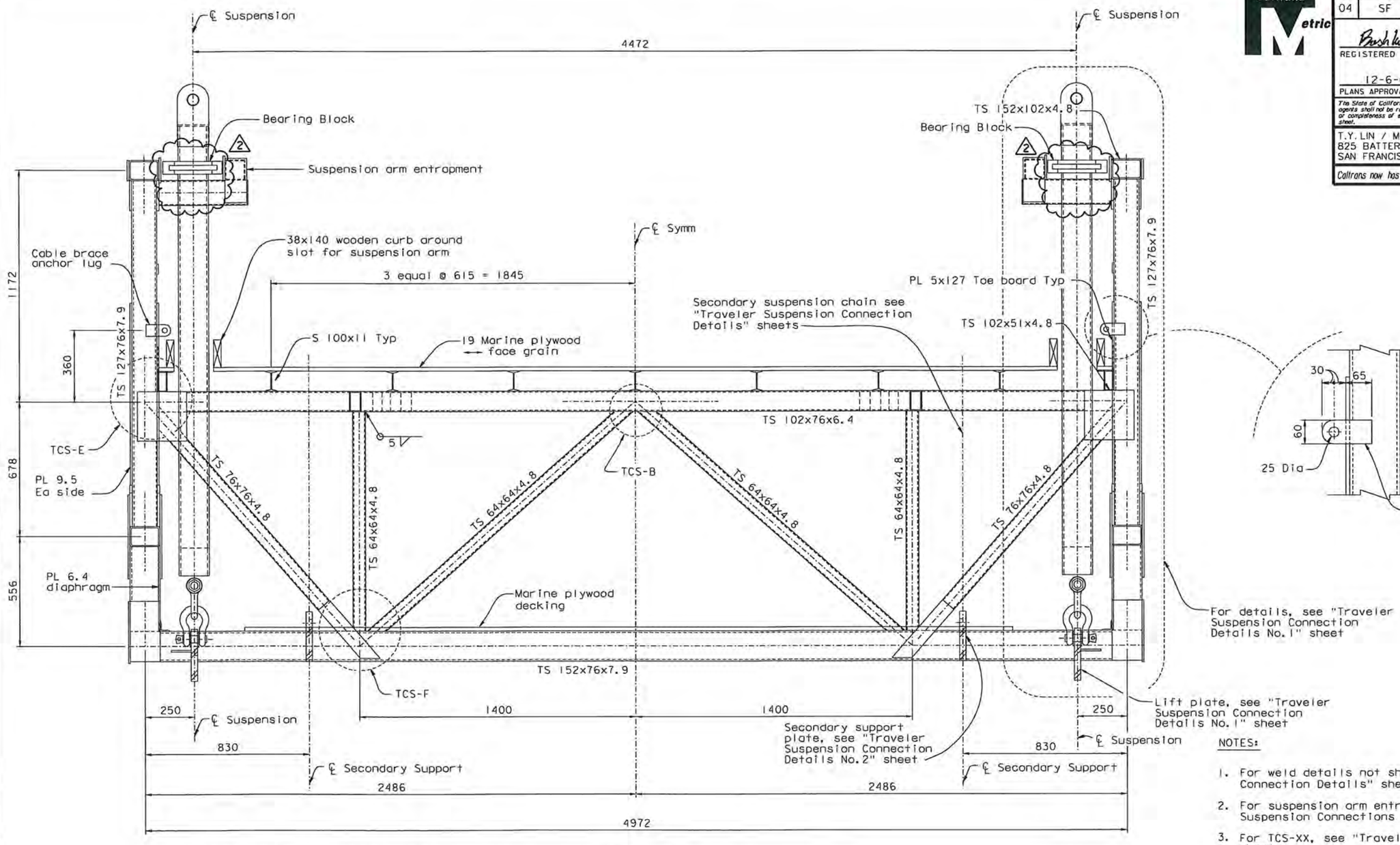

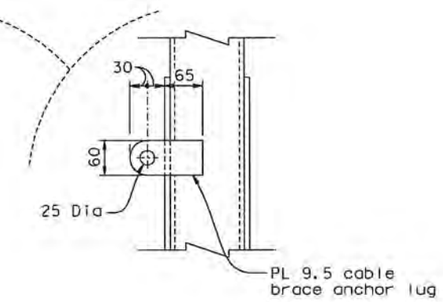

VIEW-D
1:10

NOTES:

1. For weld details not shown, see "Traveler Connection Details" sheets.
2. For suspension arm entrapment details, see "Traveler Suspension Connections Details No. 4" sheet.
3. For TCS-XX, see "Traveler Connection Details" sheets.
4. The secondary suspension chain is to have sufficient slack to allow the top of the chain to be pulled at least 200 mm above the top of cap level for attachment to the suspension system. (2)

(2) REVISION (2) SUPERSEDES REVISION (1)

CONTRACT CHANGE ORDER NO. 24S1
SHEET 45 OF 120

REQUESTS FOR INFORMATION NOT ADDRESSED IN THIS CCO REMAIN IN FORCE

ALL DIMENSIONS ARE IN MILLIMETERS UNLESS OTHERWISE SHOWN

MARK	DATE	DESCRIPTIONS	BY	CH'D	CCO#
2	08/21/09	TRAVELER MODIFICATIONS	BP	AS	24S1
1	07/20/07	RAIL CHANGE & MISCELLANEOUS DETAILS	BP	NV	24

REVISIONS

R. Vaizadeh/V. Toan/Y.L./W.L./F.C.
DESIGN OVERSIGHT
Roya Vaizadeh / Vang P. Toan / Y. Liu
SIGN OFF DATE 08/21/09

DESIGN	BY J. Otter	CHECKED B. Prishtina	
DETAILS	BY J. Otter	CHECKED M. Roberts	
QUANTITIES	BY J. Otter	CHECKED M. Roberts	

PREPARED FOR THE STATE OF CALIFORNIA DEPARTMENT OF TRANSPORTATION

R. Manzanarez
PROJECT ENGINEER

BRIDGE NO. 34-0006L/R
KILOMETER POST 13.2/13.9

SAN FRANCISCO OAKLAND BAY BRIDGE
EAST SPAN SEISMIC SAFETY PROJECT
SELF-ANCHORED SUSPENSION BRIDGE
(SUPERSTRUCTURE & TOWER)

TRAVELER COMMON SECTIONS NO. 4

Rev. Date: 5-18-98

ORIGINAL SCALE IN MILLIMETERS FOR REDUCED PLANS 0 10 20 30 40 50 60 70 80 90 100

CU 04
EA 0120F1

DISREGARD PRINTS BEARING EARLIER REVISION DATES 04/25/02 07/09/02 12/19/02

REVISION DATES (PRELIMINARY STAGE ONLY)

SHEET 660R2 OF

FILE => I:\bb\04-012001\sas\contract plans and cco\cco\cco#24s1\3-revision 08-21-09\dgn\aktrv073.dgn

100% PS&E

USERNAME => arivera DATE PLOTTED => 21 AUG 2009 TIME PLOTTED => 14:53:36

DIST.	COUNTY	ROUTE	KILOMETER POST TOTAL PROJECT	SHEET NO.	TOTAL SHEETS
04	SF	80	13.2/13.9	1079R1	1204

Caltrans Metric

Boshkim Prishtina
REGISTERED ENGINEER - CIVIL

12-6-04
PLANS APPROVAL DATE

REGISTERED PROFESSIONAL ENGINEER Boshkim Prishtina No. C 053561 Exp. 6/30/11 CIVIL STATE OF CALIFORNIA

The State of California or its officers or agents shall not be responsible for the accuracy or completeness of electronic copies of this plan sheet.

T.Y. LIN / MOFFATT & NICHOL
825 BATTERY STREET
SAN FRANCISCO, CA 94111

Caltrans now has a web site! To get to the web site, go to: http://www.dot.ca.gov

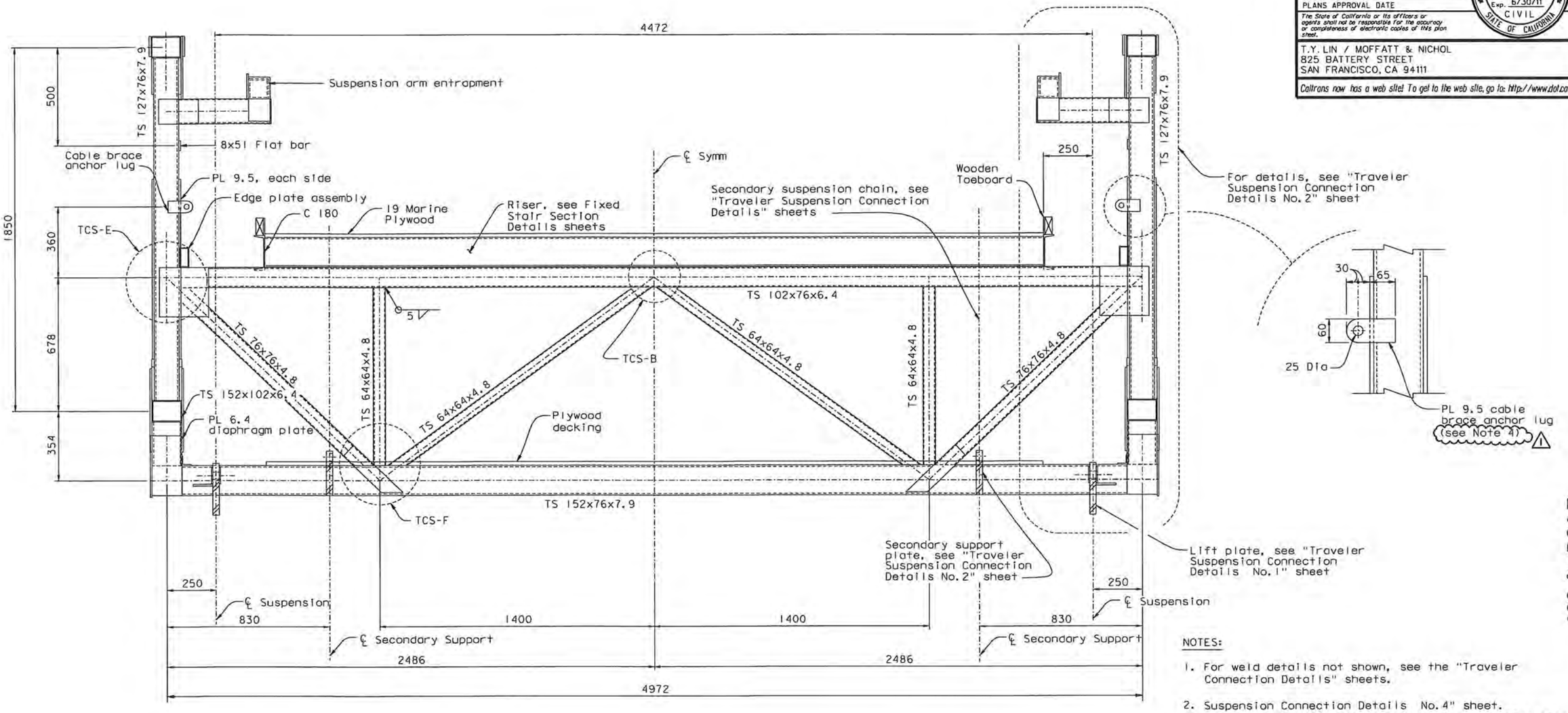

VIEW-F
1:10

NOTES:

1. For weld details not shown, see the "Traveler Connection Details" sheets.
2. Suspension Connection Details No. 4" sheet. For suspension arm entrapment details, see "Traveler
3. For TCS-XX, see "Traveler Connection Details" sheets.
4. The PL 5 toeboard may be clipped to accommodate anchor lug.

CONTRACT CHANGE ORDER NO. 24S1
SHEET 46 OF 120

REQUESTS FOR INFORMATION NOT ADDRESSED IN THIS CCO REMAIN IN FORCE

ALL DIMENSIONS ARE IN MILLIMETERS UNLESS OTHERWISE SHOWN

R. Vallzadeh/V. Toan/Y.L./W.L./F.C.
DESIGN OVERSIGHT
SIGN OFF DATE 06/19/09

MARK	DATE	DESCRIPTIONS	BY	CH'D	CCO#
1	06/19/09	TRAVELER MODIFICATIONS	BP	AS	24S1

REVISIONS

	BY	CHECKED
DESIGN	J. Otter	B. Prishtina
DETAILS	J. Otter	M. Roberts
QUANTITIES	J. Otter	M. Roberts

PREPARED FOR THE STATE OF CALIFORNIA DEPARTMENT OF TRANSPORTATION

R. Manzanarez
PROJECT ENGINEER

BRIDGE NO. 34-0006L/R
KILOMETER POST 13.2/13.9

SAN FRANCISCO OAKLAND BAY BRIDGE
EAST SPAN SEISMIC SAFETY PROJECT
SELF-ANCHORED SUSPENSION BRIDGE
(SUPERSTRUCTURE & TOWER)

TRAVELER COMMON SECTIONS NO. 6

Rev. Date: 5-18-98

ORIGINAL SCALE IN MILLIMETERS FOR REDUCED PLANS 0 10 20 30 40 50 60 70 80 90 100

CU 04
EA 0120F1

DISREGARD PRINTS BEARING EARLIER REVISION DATES

REVISION DATES (PRELIMINARY STAGE ONLY) 04/09/02 01/09/02 12/19/02

SHEET 662R1 OF

FILE => I:\bb\04-012001\sas\contract plans and cco\cco\cco*24s1\2-revision 06-19-09\dgn\aktrv075.dgn

100 % PS&E

USERNAME => dwinrow DATE PLOTTED => 17 JUN 2009 TIME PLOTTED => 10:09:45

DIST.	COUNTY	ROUTE	KILOMETER POST TOTAL PROJECT	SHEET NO.	TOTAL SHEETS
04	SF	80	13.2/13.9	1080R1	1204

Caltrans Metric

REGISTERED ENGINEER - CIVIL

12-6-04
PLANS APPROVAL DATE

The State of California or its officers or agents shall not be responsible for the accuracy or completeness of electronic copies of this plan sheet.

REGISTERED PROFESSIONAL ENGINEER Bashkim Prishtina No. C 053561 Exp. 6/30/11 CIVIL STATE OF CALIFORNIA

T.Y. LIN / MOFFATT & NICHOL
825 BATTERY STREET
SAN FRANCISCO, CA 94111

Caltrans now has a web site! To get to the web site, go to: http://www.dot.ca.gov

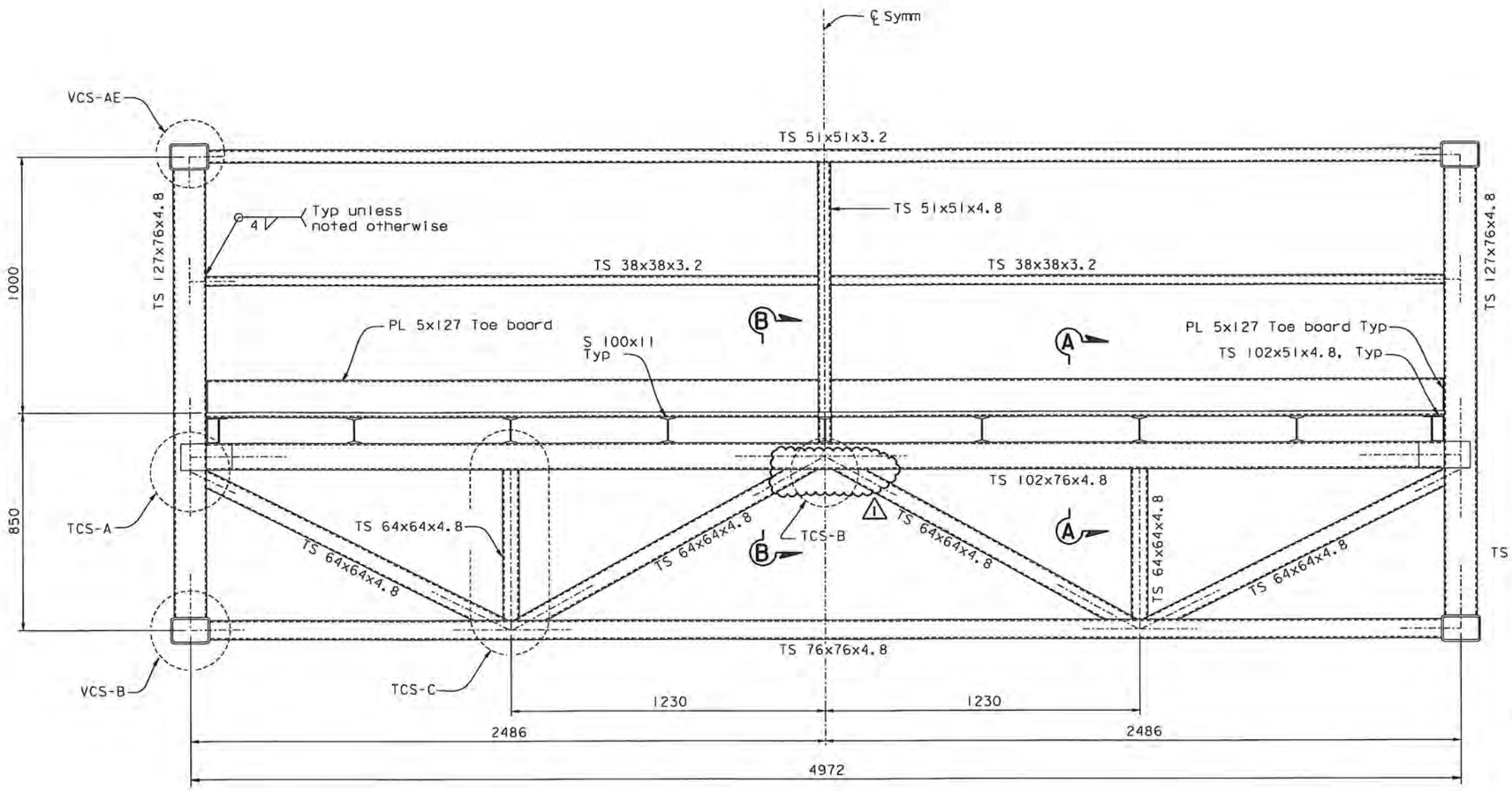

VIEW-G
1:10

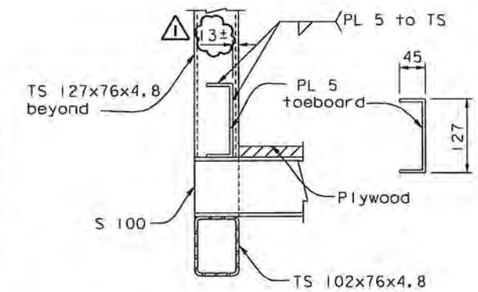

SECTION A-A
1:5

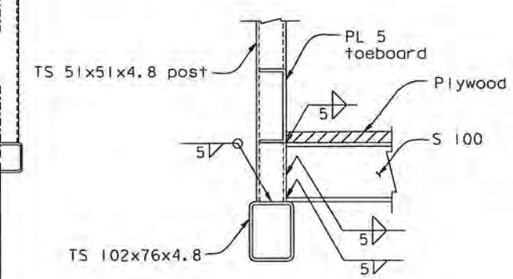

SECTION B-B
1:5

NOTES:

1. For weld details not shown, see "Traveler Connection Details" sheets.
2. For VCS-XX and TCS-XX, see "Traveler Connection Details" sheets.

CONTRACT CHANGE ORDER NO. 24S1
SHEET 47 OF 120

REQUESTS FOR INFORMATION NOT ADDRESSED IN THIS CCO REMAIN IN FORCE

ALL DIMENSIONS ARE IN MILLIMETERS UNLESS OTHERWISE SHOWN

SAN FRANCISCO OAKLAND BAY BRIDGE
EAST SPAN SEISMIC SAFETY PROJECT
SELF-ANCHORED SUSPENSION BRIDGE
(SUPERSTRUCTURE & TOWER)

TRAVELER COMMON SECTIONS NO. 7

R. Valizadeh/V. Toan/Y.L./W.L./F.C.
DESIGN OVERSIGHT
Roger Valizadeh / Vong Toan / Y. Liu
SIGN OFF DATE 06/19/09

MARK	DATE	DESCRIPTIONS	BY	CH'D	CCO#
1	06/19/09	TRAVELER MODIFICATIONS	BP	AS	24S1

REVISIONS

DESIGN	BY J. Otter	CHECKED B. Prishtina	
DETAILS	BY J. Otter	CHECKED M. Roberts	
QUANTITIES	BY J. Otter	CHECKED M. Roberts	

PREPARED FOR THE STATE OF CALIFORNIA DEPARTMENT OF TRANSPORTATION

R. Manzanarez
PROJECT ENGINEER

BRIDGE NO. 34-0006L/R
KILOMETER POST 13.2/13.9

Rev. Date: 5-18-98

ORIGINAL SCALE IN MILLIMETERS FOR REDUCED PLANS 0 10 20 30 40 50 60 70 80 90 100

CU 04
EA 0120F1

DISREGARD PRINTS BEARING EARLIER REVISION DATES

REVISION DATES (PRELIMINARY STAGE ONLY) 04/19/02 07/01/02 12/19/02

SHEET 663R1 OF

FILE => I:\bb\04-01200I\sas\contract plans and cco\cco\cco#24s1\2-revision 06-19-09\dgn\aktrv076.dgn

100 % PS&E

USERNAME => dwinrow DATE PLOTTED => 17 JUN 2009 TIME PLOTTED => 11:51:23

DIST.	COUNTY	ROUTE	KILOMETER POST TOTAL PROJECT	SHEET NO.	TOTAL SHEETS
04	SF	80	13.2/13.9	1081R1	1204

Caltrans Metric

Bashkim Prishtina
REGISTERED ENGINEER - CIVIL

12-6-04
PLANS APPROVAL DATE

REGISTERED PROFESSIONAL ENGINEER
Bashkim Prishtina
No. C 053561
Exp. 6/30/11
CIVIL
STATE OF CALIFORNIA

The State of California or its officers or agents shall not be responsible for the accuracy or completeness of electronic copies of this plan sheet.

T.Y. LIN / MOFFATT & NICHOL
825 BATTERY STREET
SAN FRANCISCO, CA 94111

Caltrans now has a web site! To get to the web site, go to: http://www.dot.ca.gov

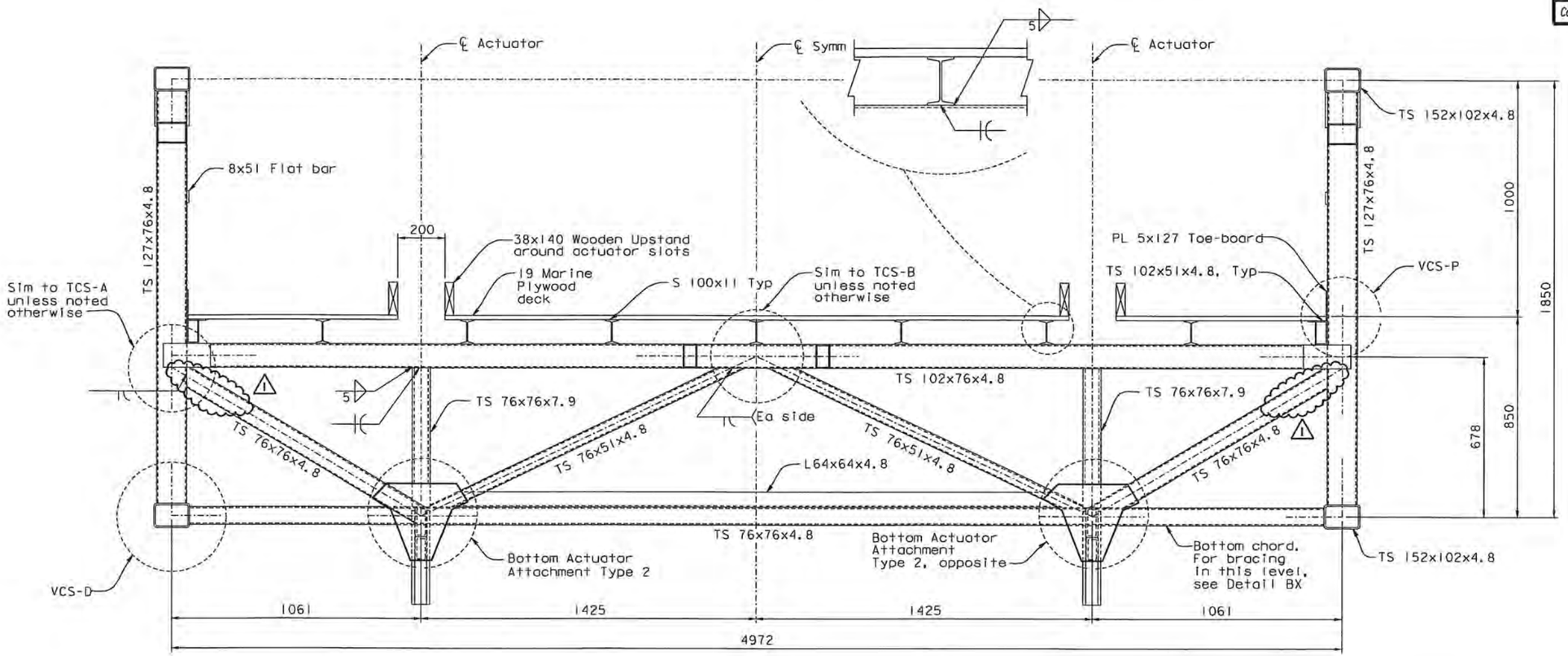

VIEW-H
1:10

NOTES:

1. For weld details not shown, see "Traveler Connection Details" sheets.
2. For bottom actuator attachment Type 2, see "Traveler Common Details No.5" sheet.
3. For Detail BX, see "Traveler Common Details No.7" sheet.
4. For TCS-XX and VCS-XX, see "Traveler Connection Details" sheets.

CONTRACT CHANGE ORDER NO. 24S1
SHEET 48 OF 120

REQUESTS FOR INFORMATION NOT ADDRESSED IN THIS CCO REMAIN IN FORCE

ALL DIMENSIONS ARE IN MILLIMETERS UNLESS OTHERWISE SHOWN

SAN FRANCISCO OAKLAND BAY BRIDGE
EAST SPAN SEISMIC SAFETY PROJECT
SELF-ANCHORED SUSPENSION BRIDGE
(SUPERSTRUCTURE & TOWER)

TRAVELER COMMON SECTIONS NO. 8

R. Valizadeh/V. Toan/Y.L./W.L./F.C.
DESIGN OVERSIGHT
Roger Valizadeh / Vong Toan / Y. Liu
SIGN OFF DATE 06/19/09

MARK	DATE	DESCRIPTIONS	BY	CH'D	CCO#
1	06/19/09	TRAVELER MODIFICATIONS	BP	AS	24S1

REVISIONS

	BY	CHECKED
DESIGN	J. Otter	B. Prishtina
DETAILS	J. Otter	M. Roberts
QUANTITIES	J. Otter	M. Roberts

PREPARED FOR THE STATE OF CALIFORNIA DEPARTMENT OF TRANSPORTATION

R. Manzanarez
PROJECT ENGINEER

BRIDGE NO. 34-0006L/R
KILOMETER POST 13.2/13.9

Rev. Date: 5-18-98

ORIGINAL SCALE IN MILLIMETERS FOR REDUCED PLANS 0 10 20 30 40 50 60 70 80 90 100

CU 04
EA 0120F1

DISREGARD PRINTS BEARING EARLIER REVISION DATES

REVISION DATES (PRELIMINARY STAGE ONLY) 04/13/02 07/01/02 12/19/02

SHEET 664R1 OF

FILE => I:\bb\04-012001\sas\contract plans and cco\cco\cco#24s1\2-revision 06-19-09\dgn\aktrv077.dgn

100 % PS&E

USERNAME => dwinrow DATE PLOTTED => 17 JUN 2009 TIME PLOTTED => 10:14:55

DIST.	COUNTY	ROUTE	KILOMETER POST TOTAL PROJECT	SHEET NO.	TOTAL SHEETS
04	SF	80	13.2/13.9	1084R1	1204

Caltrans Metric

REGISTERED ENGINEER - CIVIL

12-6-04
PLANS APPROVAL DATE

REGISTERED PROFESSIONAL ENGINEER Boshkim Prishtina No. C 053561 Exp. 6/30/11 CIVIL STATE OF CALIFORNIA

The State of California or its officers or agents shall not be responsible for the accuracy or completeness of electronic copies of this plan sheet.

T.Y.LIN / MOFFATT & NICHOL
825 BATTERY STREET
SAN FRANCISCO, CA 94111

Caltrans now has a web site! To get to the web site, go to: http://www.dot.ca.gov

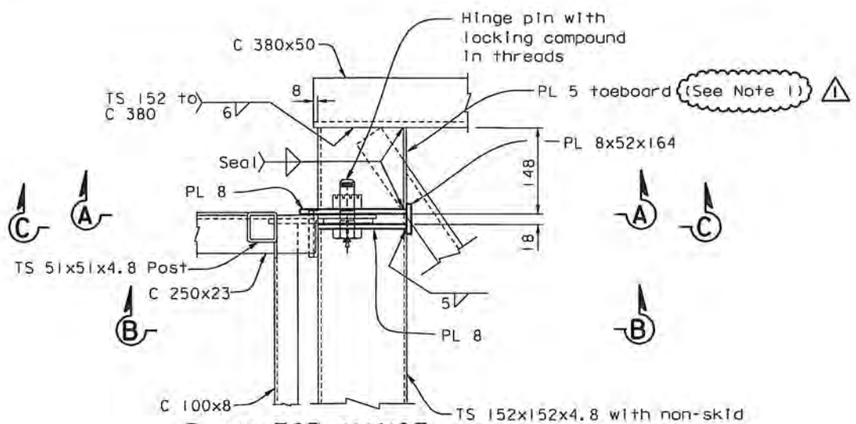

PLAN-TOP HINGE
1:5

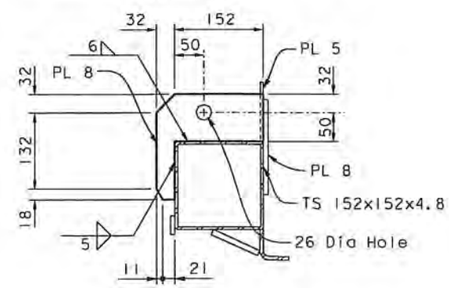

SECTION A-A
1:5

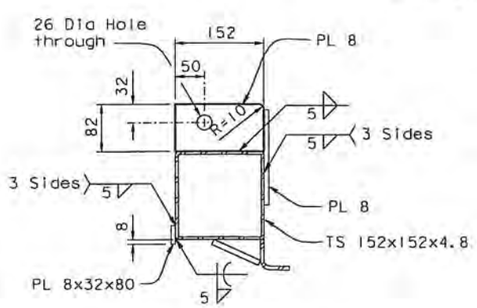

SECTION B-B
1:5

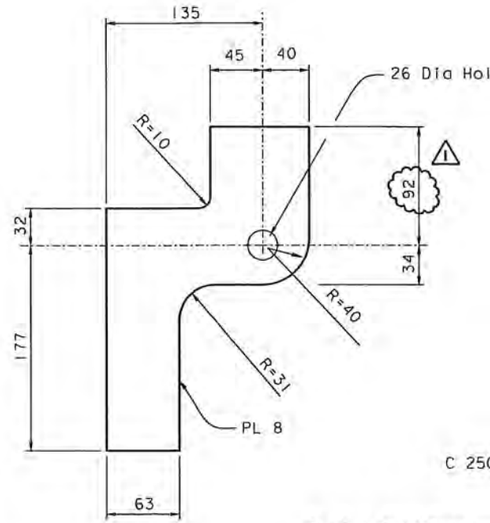

PLATE DETAIL
1:2.5

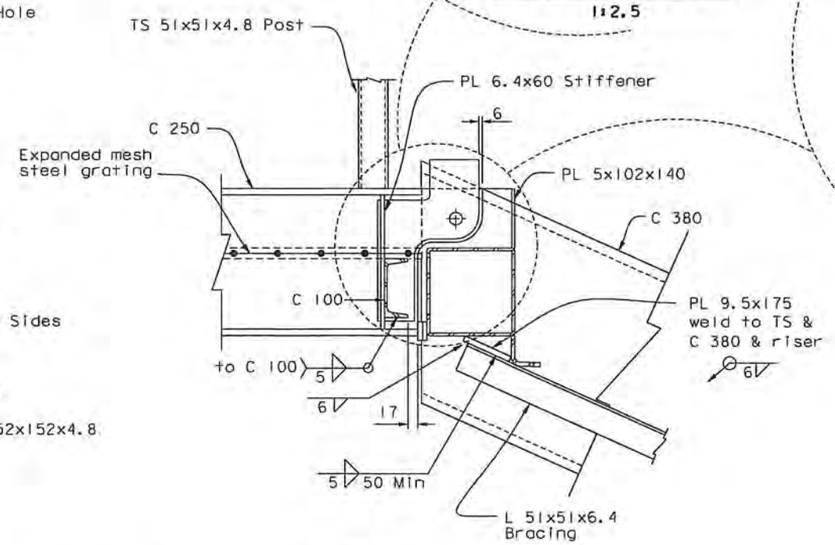

SECTION C-C
1:5

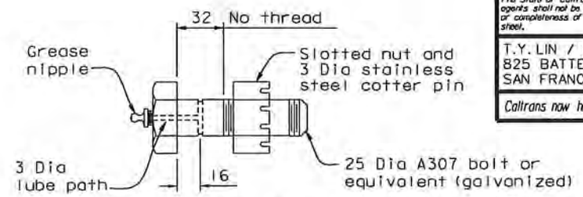

HINGE PIN
1:2

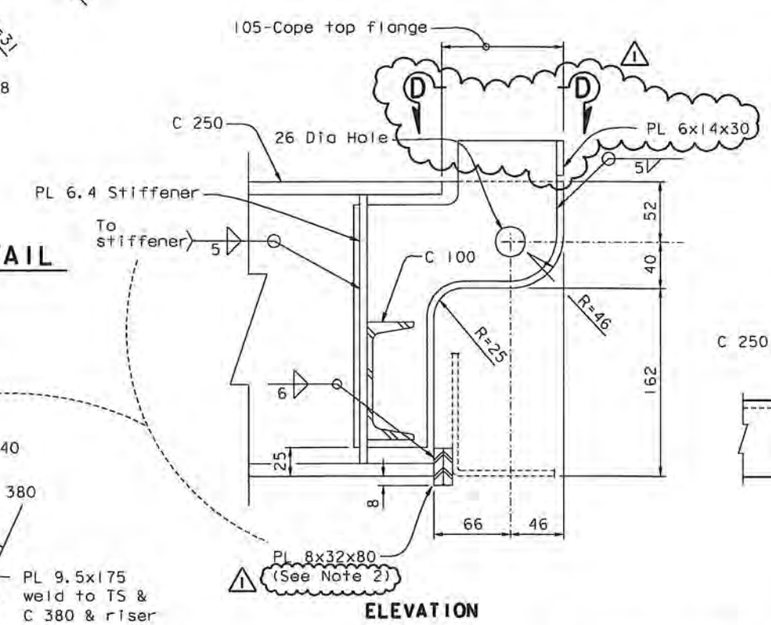

ELEVATION

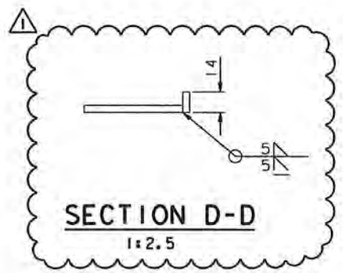

SECTION D-D
1:2.5

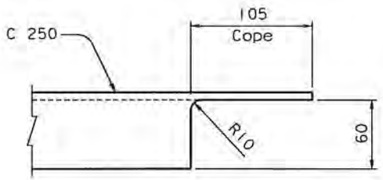

PLAN
(Other Structural Components not shown for clarity)

CHANNEL DETAIL
1:2.5
Expanded mesh not shown for clarity

NOTES:
1. Notch the toeboard to fit around PL 8x19.
2. PL 8x32x80 shall be centered in plan on the flange of the C250.

CONTRACT CHANGE ORDER NO. 24S1
SHEET 49 OF 120

REQUESTS FOR INFORMATION NOT ADDRESSED IN THIS CCO REMAIN IN FORCE

ALL DIMENSIONS ARE IN MILLIMETERS UNLESS OTHERWISE SHOWN

MARK	DATE	DESCRIPTIONS	BY	CH'D	CCO#
1	08/21/09	TRAVELER MODIFICATIONS	BP	AS	24S1

REVISIONS

R. Vallzadeh/V. Toan/Y.L./W.L./F.C.
DESIGN OVERSIGHT
Ryan Vallzadeh / Vang Toan / Y. Liu
SIGN OFF DATE 08/21/09

	BY	CHECKED
DESIGN	J. Otter	B. Prishtina
DETAILS	J. Otter	M. Roberts
QUANTITIES	J. Otter	M. Roberts

PREPARED FOR THE STATE OF CALIFORNIA DEPARTMENT OF TRANSPORTATION

R. Manzanarez
PROJECT ENGINEER

BRIDGE NO. 34-0006L/R
KILOMETER POST 13.2/13.9

SAN FRANCISCO OAKLAND BAY BRIDGE
EAST SPAN SEISMIC SAFETY PROJECT
SELF-ANCHORED SUSPENSION BRIDGE
(SUPERSTRUCTURE & TOWER)

TRAVELER COMMON DETAILS NO. 2

Rev. Date: 5-18-98

ORIGINAL SCALE IN MILLIMETERS FOR REDUCED PLANS 0 10 20 30 40 50 60 70 80 90 100

CU 04
EA 0120F1

DISREGARD PRINTS BEARING EARLIER REVISION DATES 04/27/02 01/30/03 12/15/03

SHEET 667R1 OF

FILE => I:\bb\04-012001\sas\contract plans and cco\cco\cco#24s1\3-revision 08-21-09\dgn\aktrv081.dgn

USERNAME => grivera DATE PLOTTED => 21 AUG 2009 TIME PLOTTED => 14:55:25

100 % PS&E

DIST.	COUNTY	ROUTE	KILOMETER POST TOTAL PROJECT	SHEET NO.	TOTAL SHEETS
04	SF	80	13.2/13.9	1085R1	1204

Caltrans Metric

Bashkim Prishtina
REGISTERED ENGINEER - CIVIL

12-6-04
PLANS APPROVAL DATE

REGISTERED PROFESSIONAL ENGINEER Bashkim Prishtina No. C 053561 Exp. 6/30/11 CIVIL STATE OF CALIFORNIA

The State of California or its officers or agents shall not be responsible for the accuracy or completeness of electronic copies of this plan sheet.

T.Y. LIN / MOFFATT & NICHOL
825 BATTERY STREET
SAN FRANCISCO, CA 94111

Caltrans now has a web site! To get to the web site, go to: http://www.dot.ca.gov

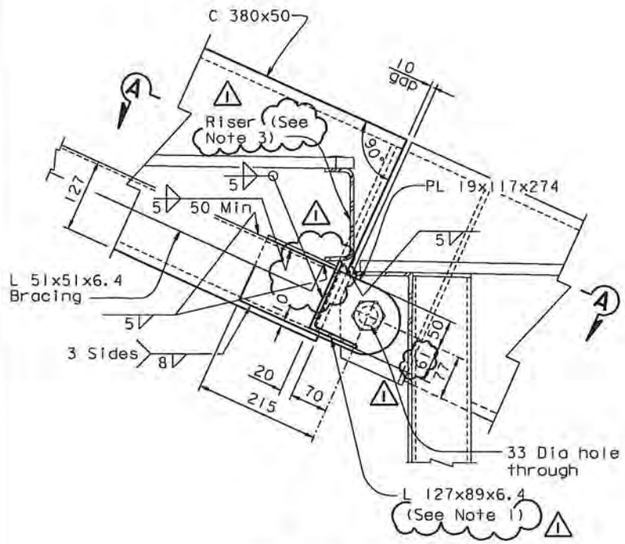

TOP PORTION*

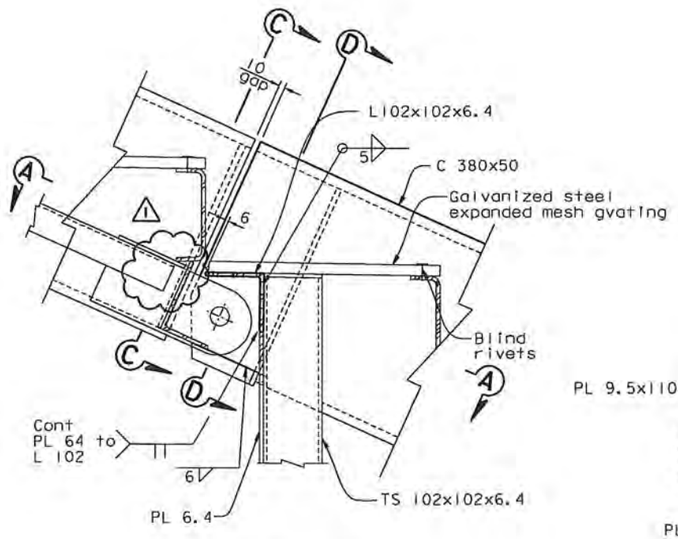

BOTTOM PORTION*

*For details not shown in top portion, see bottom portion and vice versa

BOTTOM HINGE - INSIDE ELEVATION
1:5

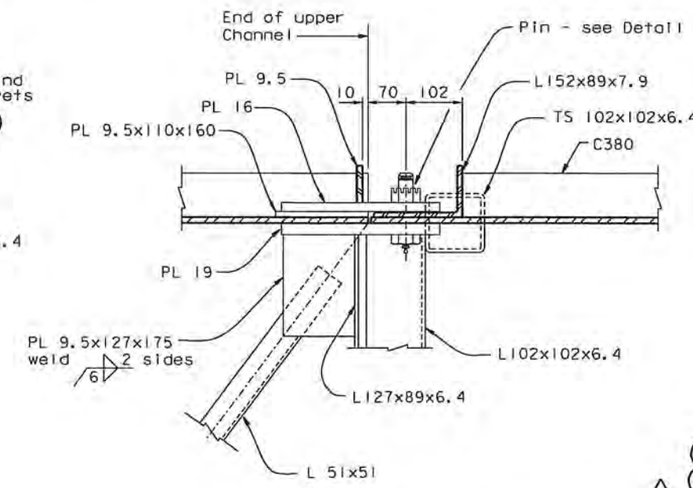

SECTION A-A
1:5

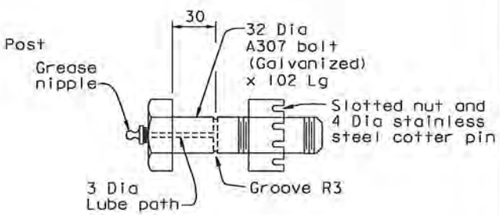

PIN DETAIL
1:2

NOTES:

1. Vertical leg of L27x89 may be trimmed to fit to the riser.
2. Plate 9.5x110x160 may be bevelled, ground or otherwise shaped to fit to clear the radius of the C380.
3. The bottom flange of the riser may be locally trimmed as required to fit.

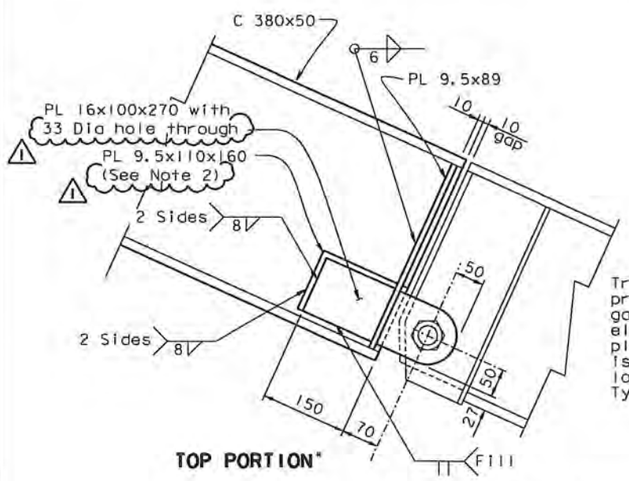

TOP PORTION*

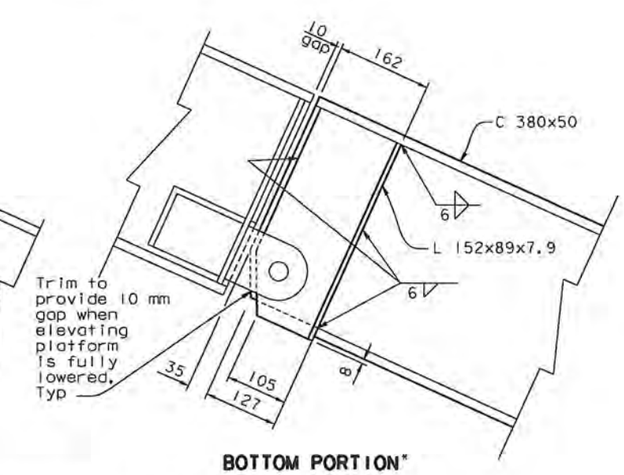

BOTTOM PORTION*

BOTTOM HINGE - OUTSIDE ELEVATION
1:5

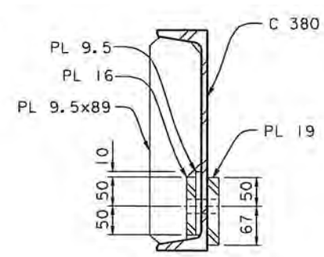

SECTION C-C
1:5

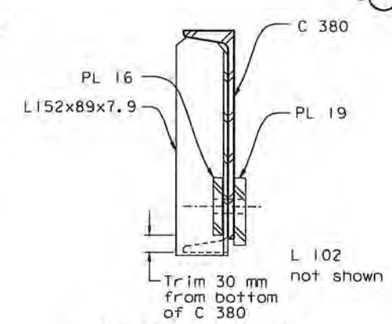

SECTION D-D
1:5

CONTRACT CHANGE ORDER NO. 2451
SHEET 50 OF 120

REQUESTS FOR INFORMATION NOT ADDRESSED IN THIS CCO REMAIN IN FORCE

ALL DIMENSIONS ARE IN MILLIMETERS UNLESS OTHERWISE SHOWN

R. Valizadeh/V. Ioan/Y.L./W.L./F.C.
DESIGN OVERSIGHT
SIGN OFF DATE 06/19/09

MARK	DATE	DESCRIPTIONS	BY	CH'D	CCO#
1	06/19/09	TRAVELER MODIFICATIONS	BP	AS	2451

REVISIONS

DESIGN	BY J. Otter	CHECKED B. Prishtina	
DETAILS	BY J. Otter	CHECKED M. Roberts	
QUANTITIES	BY J. Otter	CHECKED M. Roberts	

PREPARED FOR THE STATE OF CALIFORNIA DEPARTMENT OF TRANSPORTATION

R. Manzanarez
PROJECT ENGINEER

BRIDGE NO. 34-0006L/R
KILOMETER POST 13.2/13.9

SAN FRANCISCO OAKLAND BAY BRIDGE
EAST SPAN SEISMIC SAFETY PROJECT
SELF-ANCHORED SUSPENSION BRIDGE (SUPERSTRUCTURE & TOWER)

TRAVELER COMMON DETAILS NO. 3

Rev. Date: 5-18-98

ORIGINAL SCALE IN MILLIMETERS FOR REDUCED PLANS 0 10 20 30 40 50 60 70 80 90 100

CU 04
EA 0120F1

DISREGARD PRINTS BEARING EARLIER REVISION DATES

REVISION DATES (PRELIMINARY STAGE ONLY) 04/29/02 03/29/02 12/11/02

SHEET 668R1 OF

FILE => I:\bb\04-0120F1\sas\contract plans and cco\cco\cco*2451\2-revision 06-19-09\dgn\aktrv082.dgn

100 % PS&E

USERNAME => dwinrow DATE PLOTTED => 17 JUN 2009 TIME PLOTTED => 10:17:59

DIST.	COUNTY	ROUTE	KILOMETER POST TOTAL PROJECT	SHEET NO.	TOTAL SHEETS
04	SF	80	13.2/13.9	1086R1	1204

Caltrans Metric

REGISTERED ENGINEER - CIVIL

12-6-04
PLANS APPROVAL DATE

REGISTERED PROFESSIONAL ENGINEER Bashkim Prishtina No. C 053561 Exp. 6/30/11 CIVIL STATE OF CALIFORNIA

The State of California or its officers or agents shall not be responsible for the accuracy or completeness of electronic copies of this plan sheet.

T.Y. LIN / MOFFATT & NICHOL
825 BATTERY STREET
SAN FRANCISCO, CA 94111

Caltrans now has a web site! To get to the web site, go to: http://www.dot.ca.gov

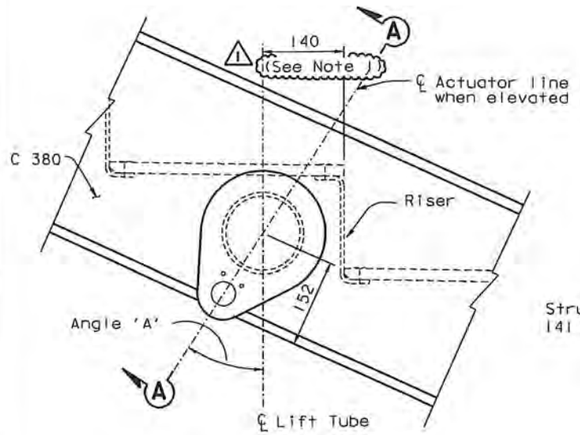

TOP ACTUATOR ATTACHMENT
1:5

Location	Angle 'A' (degrees)
SAS-E	34° 0' 46"
SAS-W	27° 36' 48"
E2/E3-NE	34° 38' 30"
E2/E3-SE	32° 47' 16"
E2/E3-NW	40° 31' 46"
E2/E3-SW	35° 58' 33"

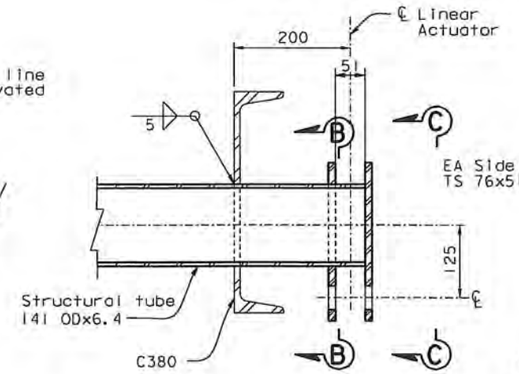

SECTION A-A
1:5

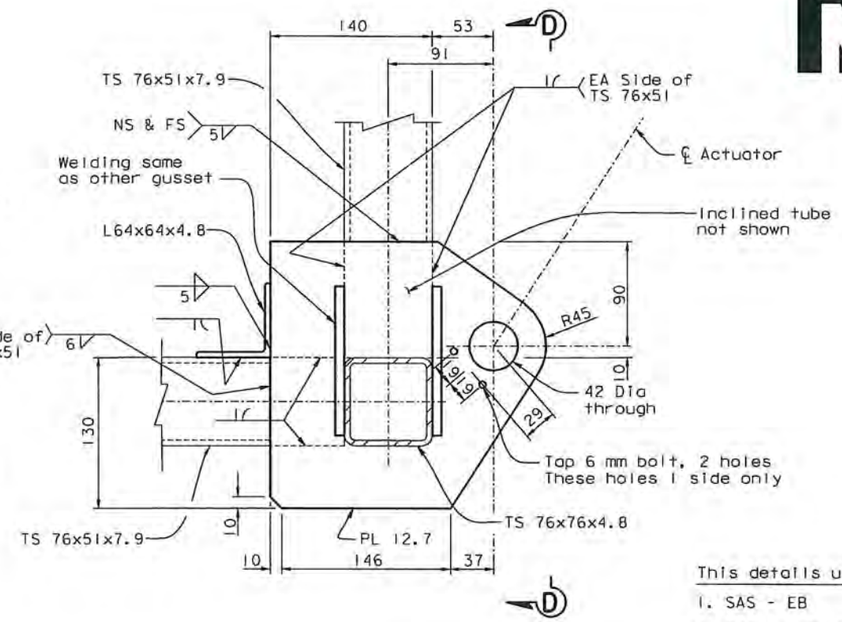

This details used on
1. SAS - EB
2. E2/E3 - WB South Side

BOTTOM ACTUATOR ATTACHMENT TYPE 1
1:2.5

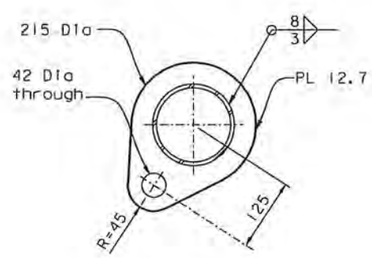

SECTION B-B
1:5

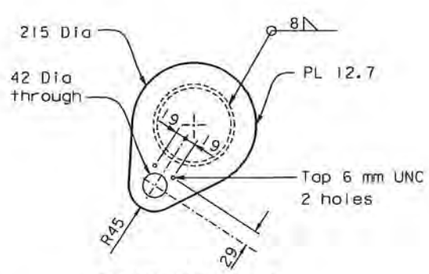

SECTION C-C
1:5

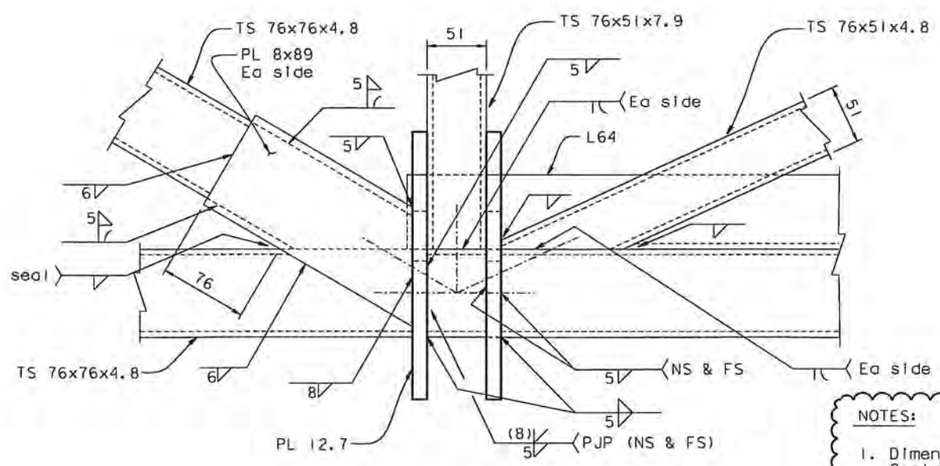

SECTION D-D
1:2.5

NOTES:
1. Dimension may vary 120 to 160, otherwise the Contractor may propose an alternative layout, subject to review and approval of the Engineer.

CONTRACT CHANGE ORDER NO. 2451
SHEET 51 OF 120

REQUESTS FOR INFORMATION NOT ADDRESSED IN THIS CCO REMAIN IN FORCE

ALL DIMENSIONS ARE IN MILLIMETERS UNLESS OTHERWISE SHOWN

MARK	DATE	DESCRIPTIONS	BY	CH'D	CCO#
1	06/19/09	TRAVELER MODIFICATIONS	BP	AS	2451

REVISIONS

R. Valizadeh/V. Toan/Y.L./W.L./F.C.
DESIGN OVERSIGHT
Roya Valizadeh / Vong Toan / Y. Liu
SIGN OFF DATE 06/19/09

Rev. Date: 5-18-98

	BY	CHECKED
DESIGN	J. Otter	B. Prishtina
DETAILS	J. Otter	M. Roberts
QUANTITIES	J. Otter	M. Roberts

PREPARED FOR THE STATE OF CALIFORNIA DEPARTMENT OF TRANSPORTATION

R. Manzanarez
PROJECT ENGINEER

BRIDGE NO. 34-0006L/R
KILOMETER POST 13.2/13.9

SAN FRANCISCO OAKLAND BAY BRIDGE
EAST SPAN SEISMIC SAFETY PROJECT
SELF-ANCHORED SUSPENSION BRIDGE (SUPERSTRUCTURE & TOWER)

TRAVELER COMMON DETAILS NO. 4

ORIGINAL SCALE IN MILLIMETERS FOR REDUCED PLANS 0 10 20 30 40 50 60 70 80 90 100

CU 04
EA 0120F1

DISREGARD PRINTS BEARING EARLIER REVISION DATES

REVISION DATES (PRELIMINARY STAGE ONLY) 04/29/02 01/29/02 12/19/02

SHEET 669R1 OF

FILE => I:\bb\04-01200I\sas\contract plans and cco\cco\cco#2451\2-revision 06-19-09\dgn\aktrv083.dgn

100 % PS&E

USERNAME => dwinrow DATE PLOTTED => 17 JUN 2009 TIME PLOTTED => 10:18:52

DIST.	COUNTY	ROUTE	KILOMETER POST TOTAL PROJECT	SHEET NO.	TOTAL SHEETS
04	SF	80	13.2/13.9	1087R1	1204

Caltrans Metric

Bashkim Prishtina
REGISTERED ENGINEER - CIVIL

12-6-04
PLANS APPROVAL DATE

REGISTERED PROFESSIONAL ENGINEER Bashkim Prishtina No. C 053561 Exp. 6/30/11 CIVIL STATE OF CALIFORNIA

The State of California or its officers or agents shall not be responsible for the accuracy or completeness of electronic copies of this plan sheet.

T.Y. LIN / MOFFATT & NICHOL
825 BATTERY STREET
SAN FRANCISCO, CA 94111

Caltrans now has a web site! To get to the web site, go to: http://www.dot.ca.gov

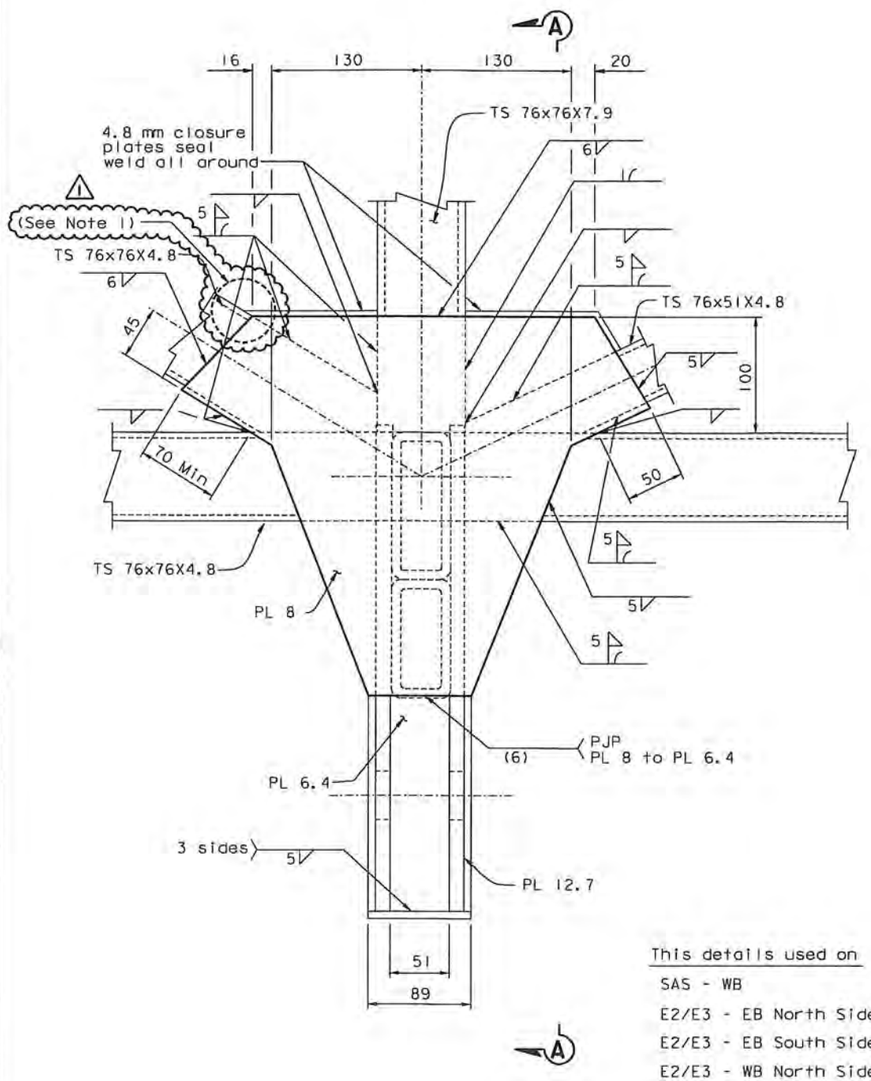

This details used on

SAS - WB
E2/E3 - EB North Side
E2/E3 - EB South Side
E2/E3 - WB North Side
E2/E3 - WB South Side

BOTTOM ACTUATOR ATTACHMENT TYPE 2

1:2.5

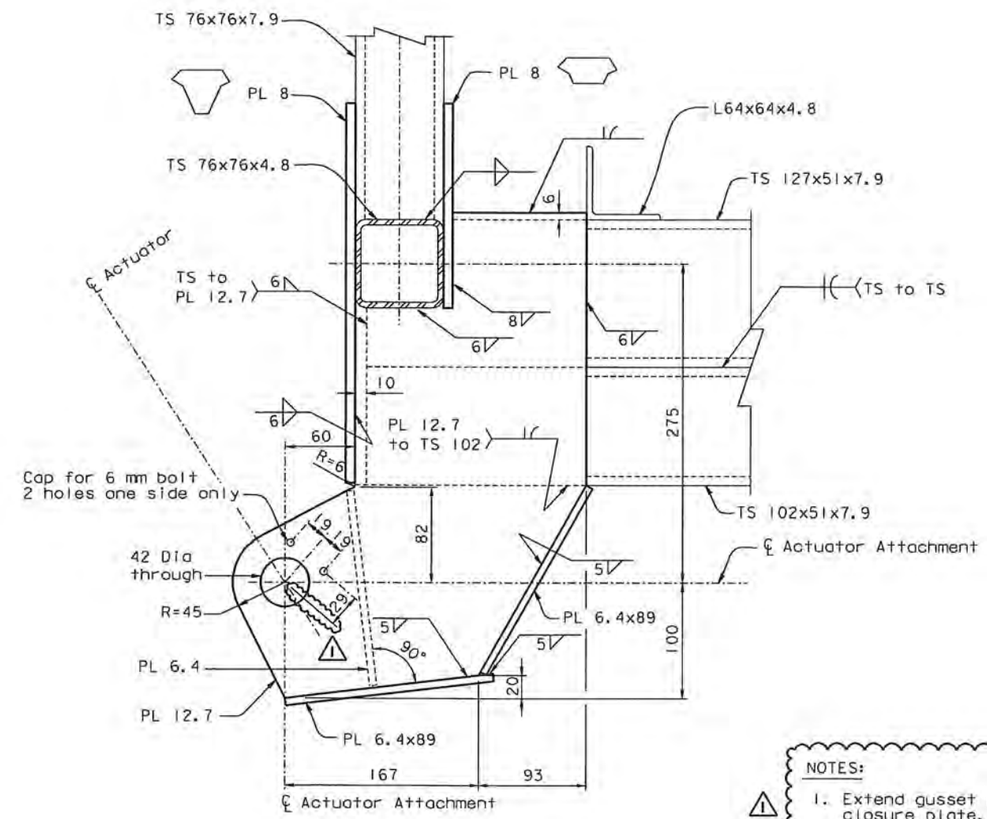

SECTION A-A

1:2.5

NOTES:

1. Extend gusset plate to close any gap at the closure plate. Otherwise add a small seal plate to close the gap.

CONTRACT CHANGE ORDER NO. 24S1
SHEET 52 OF 120

REQUESTS FOR INFORMATION NOT ADDRESSED IN THIS CCO REMAIN IN FORCE

ALL DIMENSIONS ARE IN MILLIMETERS UNLESS OTHERWISE SHOWN

R. Valizadeh/V. Toan/Y.L./W.L./F.C.
DESIGN OVERSIGHT
SIGN OFF DATE 06/19/09

MARK	DATE	DESCRIPTIONS	BY	CH'D	CCO#
1	06/19/09	TRAVELER MODIFICATIONS	BP	AS	24S1

REVISIONS

DESIGN	BY J. Otter	CHECKED B. Prishtina	
DETAILS	BY J. Otter	CHECKED M. Roberts	
QUANTITIES	BY J. Otter	CHECKED M. Roberts	

PREPARED FOR THE STATE OF CALIFORNIA DEPARTMENT OF TRANSPORTATION

R. Manzanarez
PROJECT ENGINEER

BRIDGE NO. 34-0006L/R
KILOMETER POST 13.2/13.9

SAN FRANCISCO OAKLAND BAY BRIDGE
EAST SPAN SEISMIC SAFETY PROJECT
SELF-ANCHORED SUSPENSION BRIDGE
(SUPERSTRUCTURE & TOWER)

TRAVELER COMMON DETAILS NO. 5

Rev. Date: 5-18-98

ORIGINAL SCALE IN MILLIMETERS FOR REDUCED PLANS 0 10 20 30 40 50 60 70 80 90 100

CU 04
EA 0120F1

DISREGARD PRINTS BEARING EARLIER REVISION DATES

REVISION DATES (PRELIMINARY STAGE ONLY) 01/25/02 01/24/02 12/13/02

SHEET 670R1 OF

FILE => I:\bb\04-012001\sas\contract plans and cco\cco\cco#24s1\2-revision 06-19-09\dgn\aktrv084.dgn

100 % PS&E

USERNAME => dwinrow DATE PLOTTED => 17 JUN 2009 TIME PLOTTED => 10:19:48

DIST.	COUNTY	ROUTE	KILOMETER POST TOTAL PROJECT	SHEET NO.	TOTAL SHEETS
04	SF	80	13.2/13.9	1090R4	1204

REGISTERED ENGINEER - CIVIL

12-6-04
PLANS APPROVAL DATE

REGISTERED PROFESSIONAL ENGINEER Bashkim Prishtina No. C 053561 Exp. 6/30/11 CIVIL STATE OF CALIFORNIA

The State of California or its officers or agents shall not be responsible for the accuracy or completeness of electronic copies of this plan sheet.

T.Y. LIN / MOFFATT & NICHOL
825 BATTERY STREET
SAN FRANCISCO, CA 94111

Caltrans now has a web site! To get to the web site, go to: http://www.dot.ca.gov

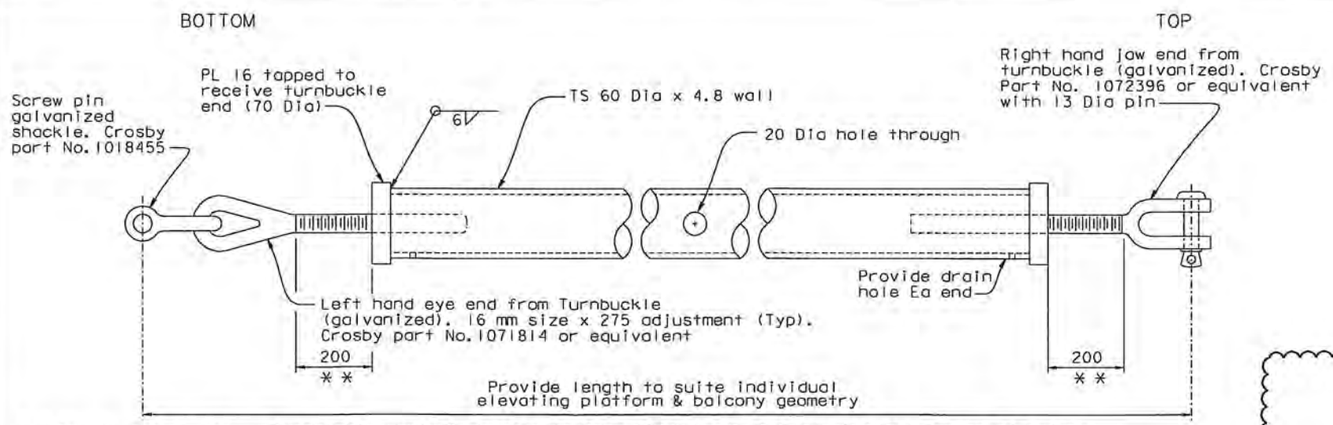

* * Set at 200 to 225 with Balcony down

Turnbuckle parts & shackle to have Min WLL of 15.6 kN with 5:1 factor of safety

TURNBUCKLE PROP FOR BALCONY ADJUSTMENT

1:2.5

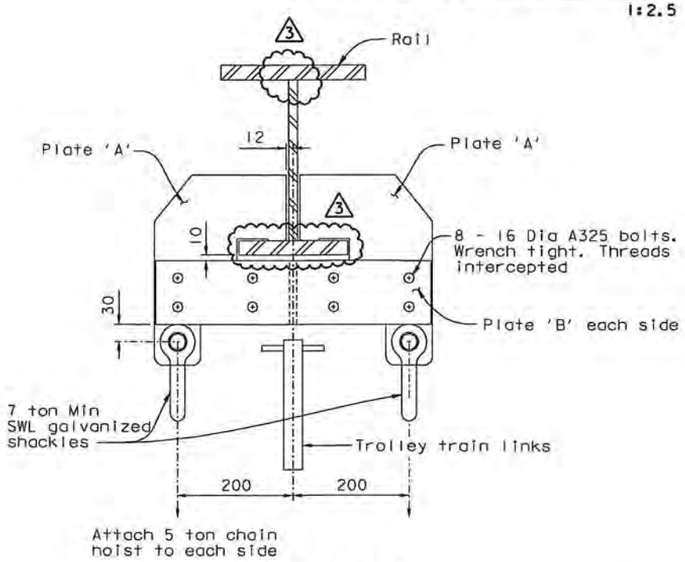

LIFT LUG ASSEMBLY

3 4

1:5

Supply 2 assemblies for every traveler.

4

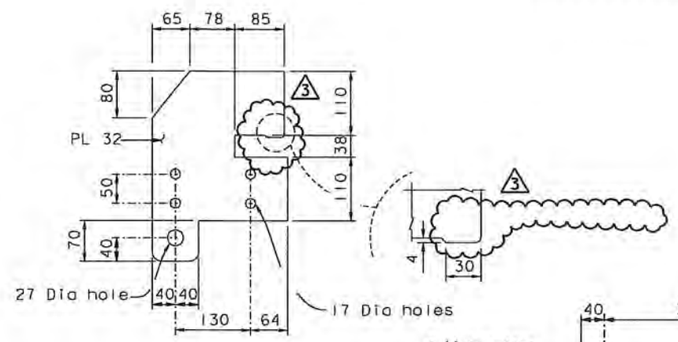

PLATE 'A'

1:5

2 required per assembly

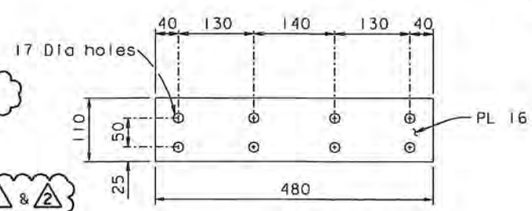

PLATE 'B'

1:5

2 required per assembly

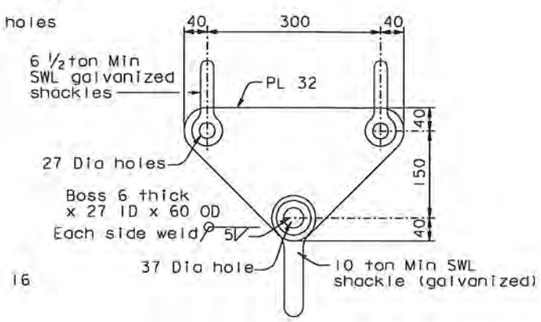

LIFT EQUALIZER

1:5

Supply 2 per Traveler complete with Shackles

4

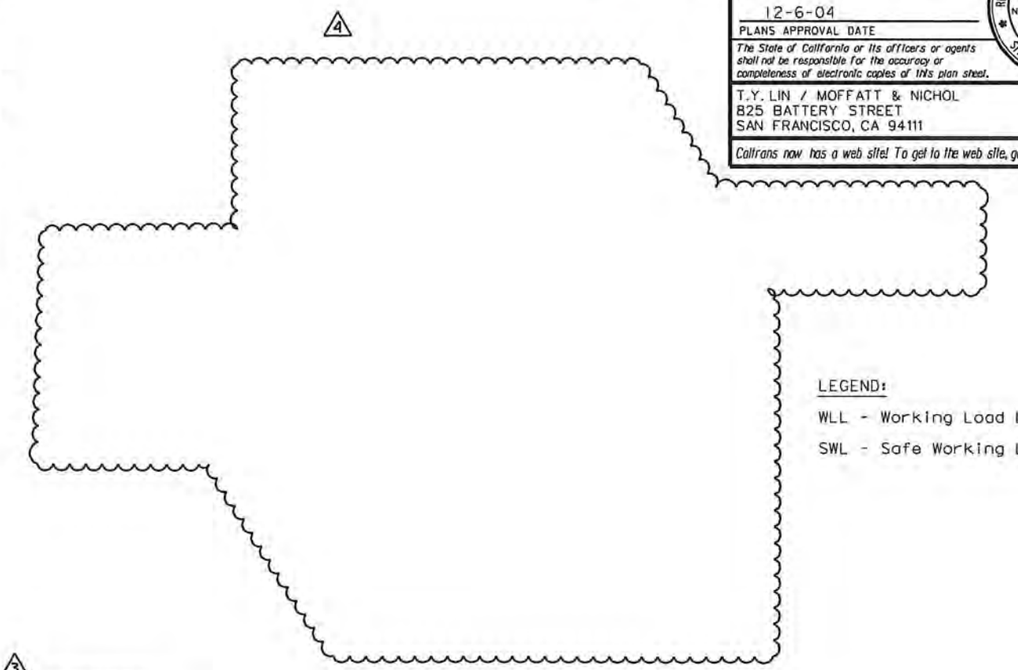

LEGEND:

WLL - Working Load Limit

SWL - Safe Working Load

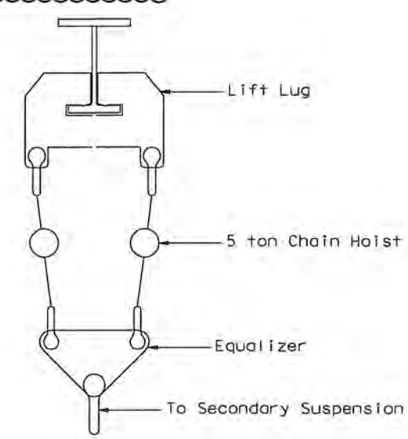

LIFT SCHEMATIC

NTS

NOTES:

4

1. For sump details, see "Traveler Common Details No. 8A" sheet.

3 REVISION 3 SUPERSEDES REVISIONS 1 & 2

CONTRACT CHANGE ORDER NO. 24S1
SHEET 53 OF 120

REQUESTS FOR INFORMATION NOT ADDRESSED IN THIS CCO REMAIN IN FORCE

MARK	DATE	DESCRIPTIONS	BY	CH'D	CCO#
4	02/12/10	TRAVELER MODIFICATIONS	BP	AS	24S1
3	06/19/09	TRAVELER MODIFICATIONS	BP	AS	24S1
2	07/20/07	RAIL CHANGE & MISCELLANEOUS DETAILS	BP	NV	24
1	08/04/06	TRAVELER RAILS	BP	NV	24

REVISIONS

R. Vallzadeh/V. Toan/Y.L./W.L./F.C.
DESIGN OVERSIGHT
Ryan Vallzadeh / Vong Toan / Y. Liu
SIGN OFF DATE 02/12/10

Rev. Date: 5-18-98

DESIGN	BY J. Otter	CHECKED B. Prishtina	
DETAILS	BY J. Otter	CHECKED M. Roberts	
QUANTITIES	BY J. Otter	CHECKED M. Roberts	

PREPARED FOR THE STATE OF CALIFORNIA DEPARTMENT OF TRANSPORTATION

R. Manzanarez
PROJECT ENGINEER

CU 04
EA 0120F1

BRIDGE NO. 34-0006L/R
KILOMETER POST 13.2/13.9

DISREGARD PRINTS BEARING EARLIER REVISION DATES

REVISION DATES (PRELIMINARY STAGE ONLY): 04/28/02 03/07/02 12/15/02

SHEET 673R4 OF

ORIGINAL SCALE IN MILLIMETERS FOR REDUCED PLANS 0 10 20 30 40 50 60 70 80 90 100

FILE => I:\bb\04-01200I\sas\contract plans and cco\cco\cco#24s1\5-revision 02-12-10\dgn\aktrv084c.dgn

SAN FRANCISCO OAKLAND BAY BRIDGE
EAST SPAN SEISMIC SAFETY PROJECT
SELF-ANCHORED SUSPENSION BRIDGE
(SUPERSTRUCTURE & TOWER)

TRAVELER COMMON DETAILS NO. 8

100 % PS&E

USERNAME => crivera DATE PLOTTED => 19 FEB 2010 TIME PLOTTED => 09:24:50

DIST.	COUNTY	ROUTE	KILOMETER POST TOTAL PROJECT	SHEET NO.	TOTAL SHEETS
04	SF	80	13.2/13.9	1090S1	1204

Caltrans Metric

REGISTERED ENGINEER - CIVIL

03-05-10

PLANS APPROVAL DATE

REGISTERED PROFESSIONAL ENGINEER Bashkim Prishtina No. C 053561 Exp. 6/30/11 CIVIL STATE OF CALIFORNIA

The State of California or its officers or agents shall not be responsible for the accuracy or completeness of electronic copies of this plan sheet.

T.Y. LIN / MOFFATT & NICHOL
825 BATTERY STREET
SAN FRANCISCO, CA 94111

Caltrans now has a web site! To get to the web site, go to: http://www.dot.ca.gov

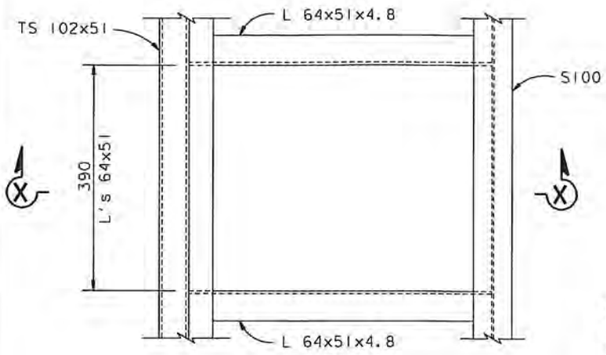

PLAN (Plywood and Cover PL Not Shown)

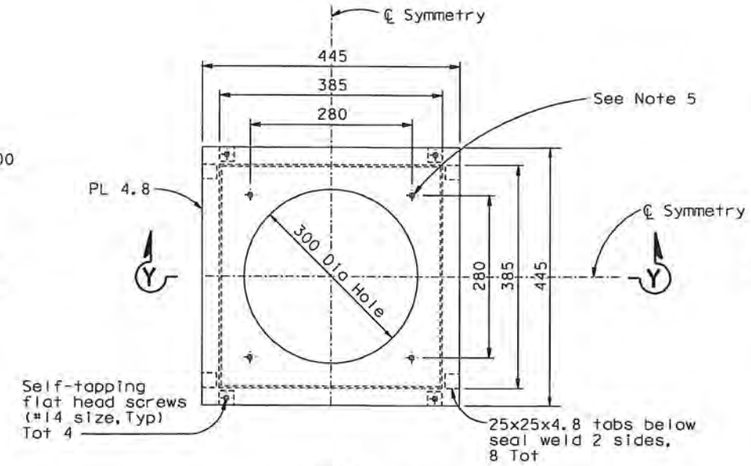

PLAN (Cover PL Not Shown)

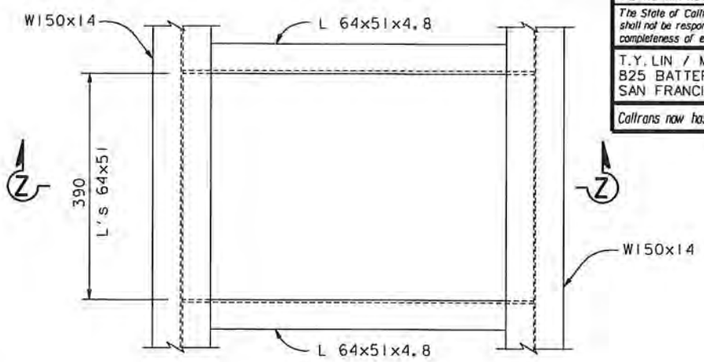

PLAN (Plywood and Cover PL Not Shown)

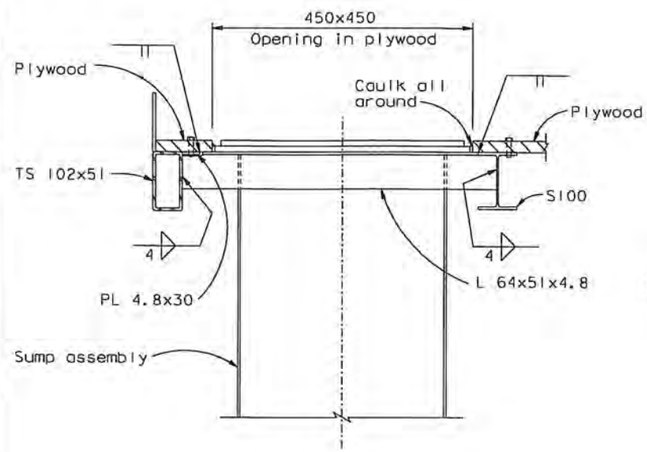

SECTION X-X

MAIN TRAVELER SUMP SUPPORT DETAILS

1:5

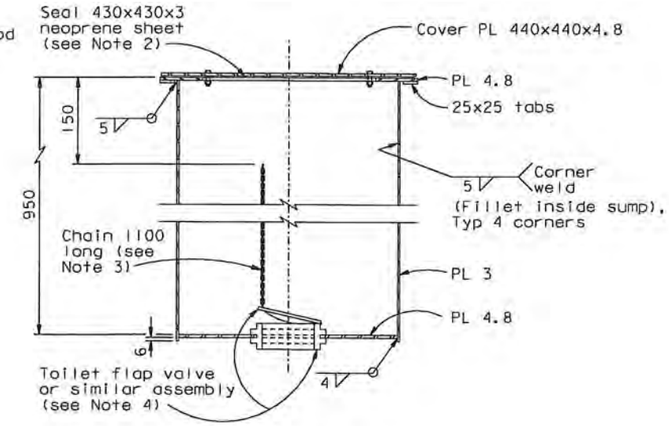

SECTION Y-Y

SUMP DETAILS

1:5

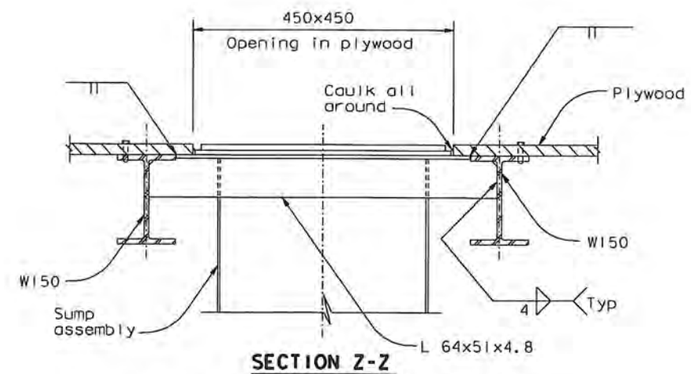

SECTION Z-Z

E2/E3 BIKEPATH TRAVELER SUMP SUPPORT DETAILS

1:5

NOTES:

1. All material shall be stainless steel.
2. Neoprene sheet shall adhere to cover plate.
3. Chain shall be stainless steel and attached to inside wall of sump.
4. Flap valve shall remain in the open position when the sump is not in use.
5. 8 Dia holes, with 6.4 Dia stainless steel bolt, nut, and washer, 4 total. Nut shall be welded below.

CONTRACT CHANGE ORDER NO. 24S1
SHEET 54 OF 120

REQUESTS FOR INFORMATION NOT ADDRESSED IN THIS CCO REMAIN IN FORCE

ALL DIMENSIONS ARE IN MILLIMETERS UNLESS OTHERWISE SHOWN

R. Valizadeh/V. Toan/Y.L./W.L./F.C.
DESIGN OVERSIGHT
SIGN OFF DATE 03/05/10

MARK	DATE	DESCRIPTIONS	BY	CH'D	CCO#
0	03/05/10	TRAVELER MODIFICATIONS	JO	BP	24S1

REVISIONS

	BY	CHECKED
DESIGN	J. Otter	B. Prishtina
DETAILS	J. Otter	B. Prishtina
QUANTITIES	J. Otter	B. Prishtina

PREPARED FOR THE STATE OF CALIFORNIA DEPARTMENT OF TRANSPORTATION

R. Manzanarez
PROJECT ENGINEER

BRIDGE NO. 34-0006L/R
KILOMETER POST 13.2/13.9

SAN FRANCISCO OAKLAND BAY BRIDGE
EAST SPAN SEISMIC SAFETY PROJECT
SELF-ANCHORED SUSPENSION BRIDGE
(SUPERSTRUCTURE & TOWER)

TRAVELER COMMON DETAILS NO. 8A

Rev. Date: 5-18-98

ORIGINAL SCALE IN MILLIMETERS FOR REDUCED PLANS 0 10 20 30 40 50 60 70 80 90 100

CU 04
EA 0120F1

DISREGARD PRINTS BEARING EARLIER REVISION DATES 03/05/10

REVISION DATES (PRELIMINARY STAGE ONLY)

SHEET 673S1 OF

FILE => I:\bb\04-012001\sas\contract plans and cco\cco\cco#24s1\6-update 03-05-10\dgn\aktrv084e.dgn

100 % PS&E

USERNAME => arivera DATE PLOTTED => 08 MAR 2010 TIME PLOTTED => 14:06:25

DIST.	COUNTY	ROUTE	KILOMETER POST TOTAL PROJECT	SHEET NO.	TOTAL SHEETS
04	SF	80	13.2/13.9	1091R2	1204

Caltrans Metric

Bashkim Prishtina
REGISTERED ENGINEER - CIVIL
12-6-04
PLANS APPROVAL DATE

REGISTERED PROFESSIONAL ENGINEER Bashkim Prishtina No. C 053561 Exp. 6/30/11 CIVIL STATE OF CALIFORNIA

The State of California or its officers or agents shall not be responsible for the accuracy or completeness of electronic copies of this plan sheet.

T.Y. LIN / MOFFATT & NICHOL
825 BATTERY STREET
SAN FRANCISCO, CA 94111

Caltrans now has a web site! To get to the web site, go to: http://www.dot.ca.gov

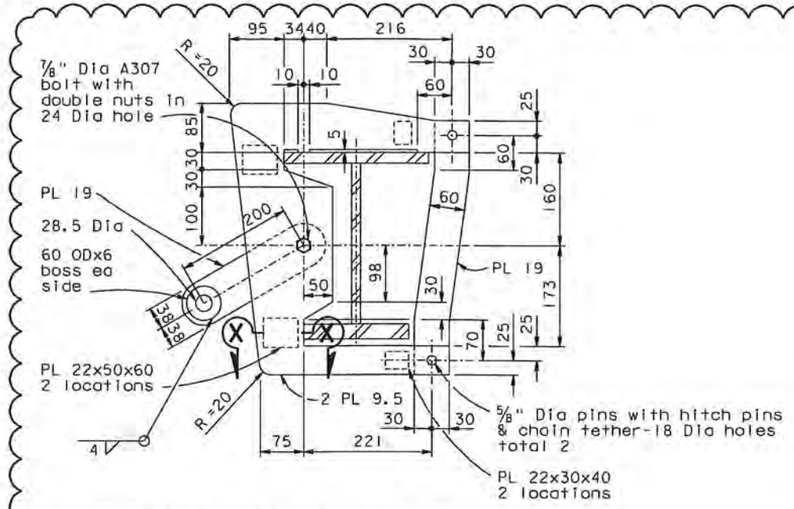

PARKING TETHER ANCHOR CLAMP

1:5

All Plate - A36 Min

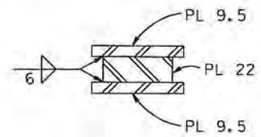

SECTION X-X

1:2.5

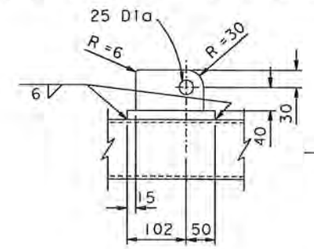

DETAIL X

1:5

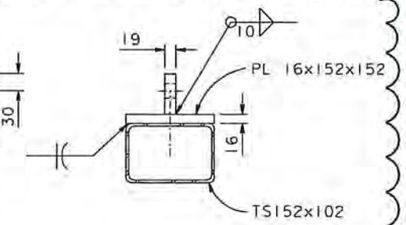

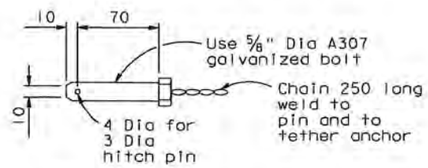

PIN DETAIL

1:2.5

20 kg/m2 (4.0 lb-4.0 psf) galvanized steel expanded structural grating (see Specifications) Provide trimming angles for support at free edges

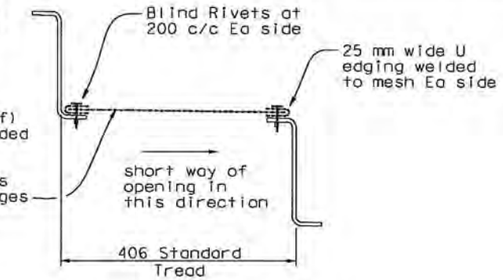

GRATING FOR ELEVATING PLATFORM STAIRS

1:5

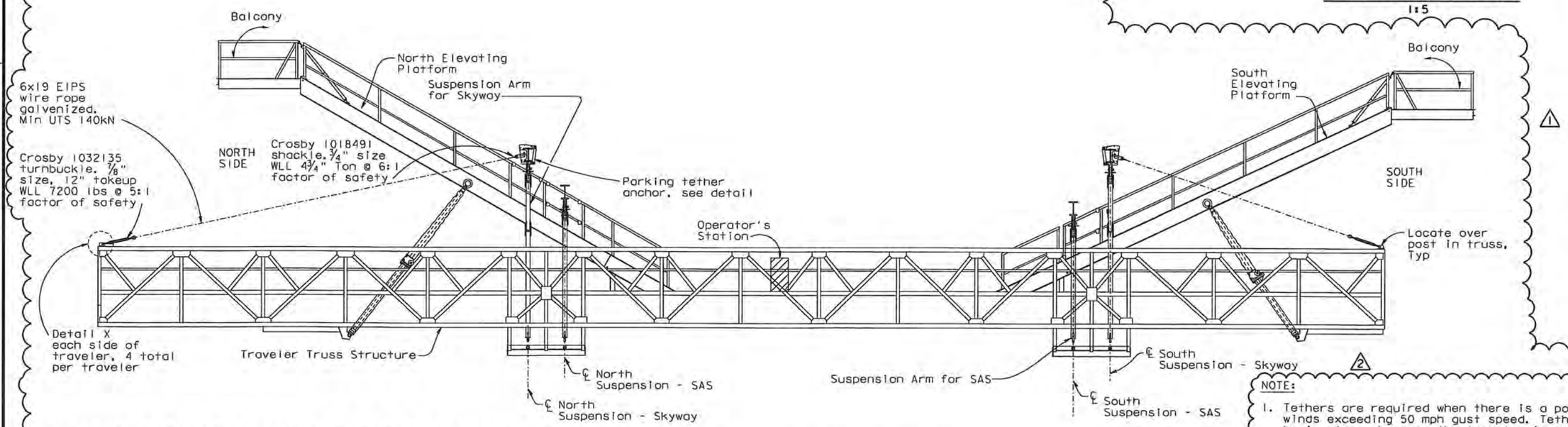

E2/E3 PARKING TETHERS

1:50

Shown on E2/E3 WB Traveler
E2/E3 EB Similar

NOTE:

1. Tethers are required when there is a possibility of winds exceeding 50 mph gust speed. Tethers are to be in place whenever the traveler is parked unattended on the Skyway suspension or when the traveler is stopped on the Skyway suspension for a period of time when there is a possibility of winds exceeding 50 mph gust speed. 4 tethers required per traveler.

CONTRACT CHANGE ORDER NO. 2451
SHEET 55 OF 120

REQUESTS FOR INFORMATION NOT ADDRESSED IN THIS CCO REMAIN IN FORCE

ALL DIMENSIONS ARE IN MILLIMETERS UNLESS OTHERWISE SHOWN

R. Vaijzadeh/V. Toon/Y.L./W.L./F.C.
DESIGN OVERSIGHT
Roya Vaijzadeh / Vong P. Toon / Y. Liu
SIGN OFF DATE 02/12/10

MARK	DATE	DESCRIPTIONS	BY	CH'D	CCO#
2	02/12/10	TRAVELER MODIFICATIONS	TH	BP	2451
1	06/19/09	TRAVELER MODIFICATIONS	TH	BP	2451

REVISIONS

	BY	CHECKED
DESIGN	J. Otter	B. Prishtina
DETAILS	J. Otter	M. Roberts
QUANTITIES	J. Otter	M. Roberts

PREPARED FOR THE STATE OF CALIFORNIA DEPARTMENT OF TRANSPORTATION

R. Manzanarez
PROJECT ENGINEER

BRIDGE NO. 34-0006L/R
KILOMETER POST 13.2/13.9

SAN FRANCISCO OAKLAND BAY BRIDGE
EAST SPAN SEISMIC SAFETY PROJECT
SELF-ANCHORED SUSPENSION BRIDGE
(SUPERSTRUCTURE & TOWER)

TRAVELER COMMON DETAILS NO. 9

Rev. Date: 5-18-98

ORIGINAL SCALE IN MILLIMETERS FOR REDUCED PLANS 0 10 20 30 40 50 60 70 80 90 100

CU 04
EA 0120F1

DISREGARD PRINTS BEARING EARLIER REVISION DATES 04/09/02 01/24/02 12/13/02

REVISION DATES (PRELIMINARY STAGE ONLY)

SHEET 674R2 OF

FILE => I:\bb\04-01200I\sas\contract plans and cco\cco\cco#24s1\5-revision 02-12-10\dgn\aktrv084d.dgn

100 % PS&E

USERNAME => orivera DATE PLOTTED => 19 FEB 2010 TIME PLOTTED => 09:00:13

DIST.	COUNTY	ROUTE	KILOMETER POST TOTAL PROJECT	SHEET NO.	TOTAL SHEETS
04	SF	80	13.2/13.9	1092R2	1204

Caltrans Metric

REGISTERED ENGINEER - CIVIL

12-6-04
PLANS APPROVAL DATE

REGISTERED PROFESSIONAL ENGINEER Boshkim Prishtina No. C 053561 Exp. 6/30/11 CIVIL STATE OF CALIFORNIA

The State of California or its officers or agents shall not be responsible for the accuracy or completeness of electronic copies of this plan sheet.

T.Y. LIN / MOFFATT & NICHOL
825 BATTERY STREET
SAN FRANCISCO, CA 94111

Caltrans now has a web site! To get to the web site, go to: http://www.dot.ca.gov

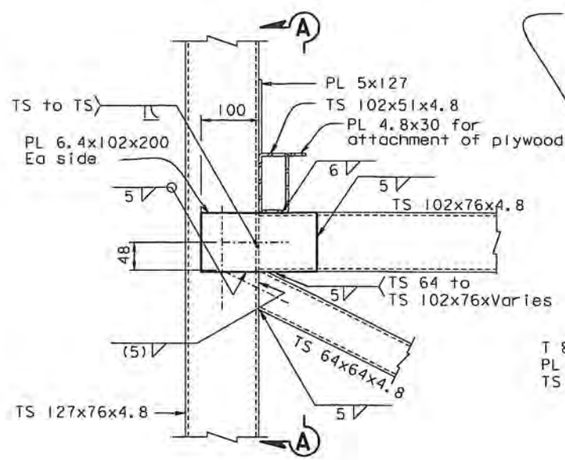

ELEVATION

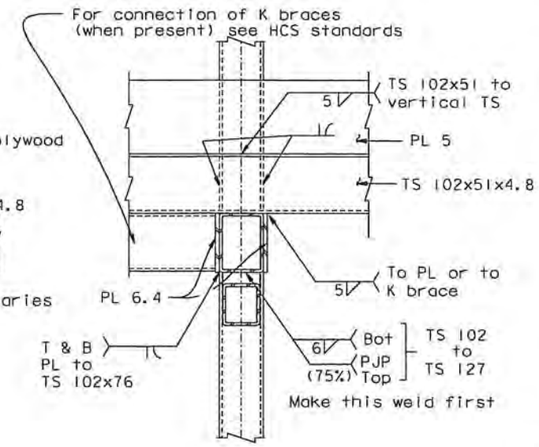

SECTION A-A

TCS-A
1:5

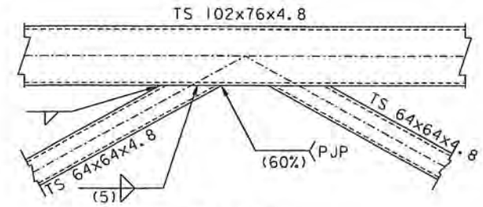

TCS-B
1:5

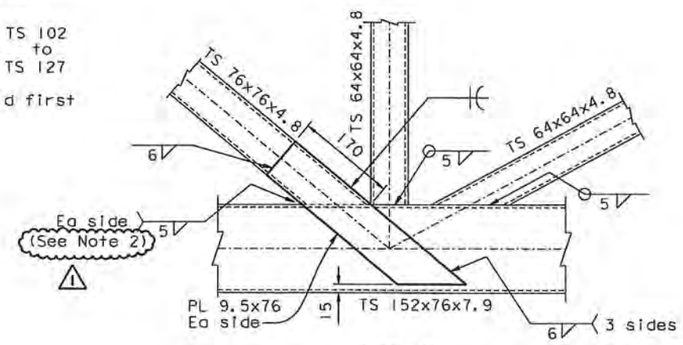

TCS-F
1:5

NOTES:

1. Seal weld at all connections whether specifically shown on Connection Details or not.
2. The Contractor shall clip the diagonal TS 76x76 to avoid interference with the vertical TS 64x64. In this case, a 5 mm fillet weld may be used between the diagonal and vertical members.
3. At the Contractor's option, a 6 mm fillet weld may be used to connect the TS 102x51 to TS 127x76.

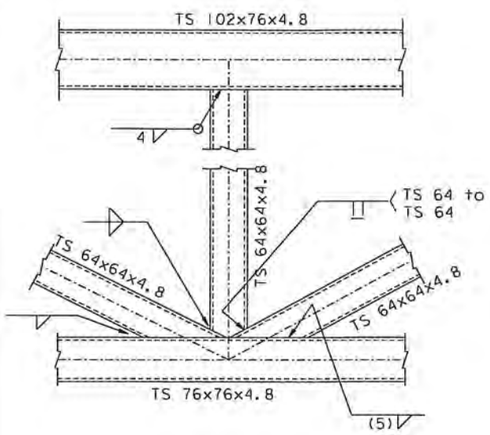

TCS-C
1:5

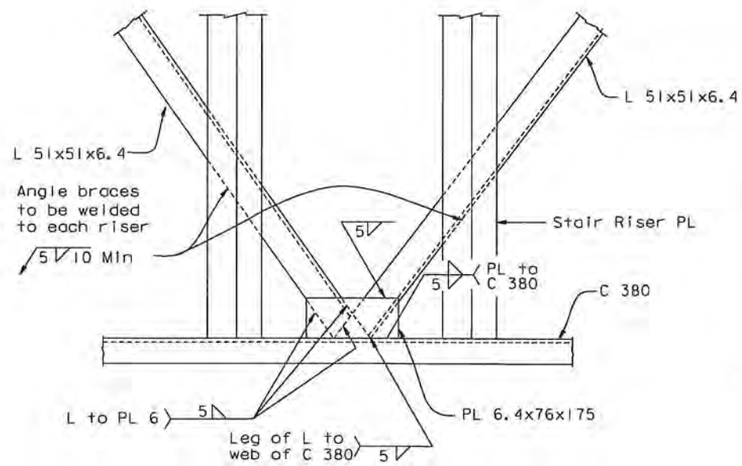

TCS-D
1:5

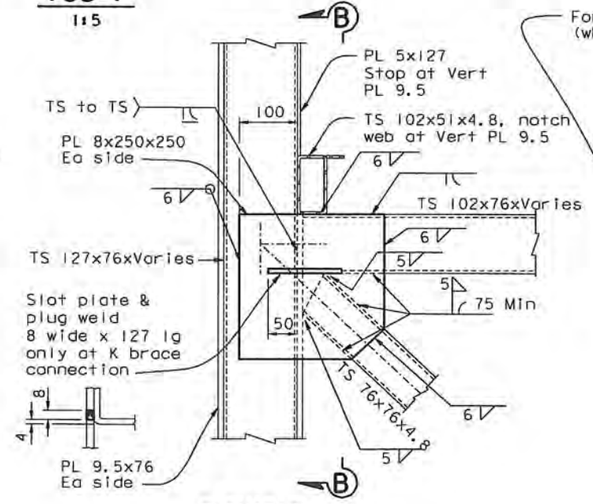

ELEVATION

TCS-E
1:5

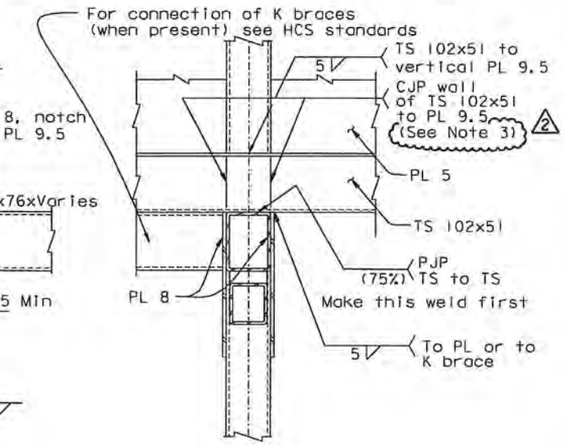

SECTION B-B

TRANSVERSE CONNECTION STANDARDS (TCS)

CONTRACT CHANGE ORDER NO. 24S1
SHEET 56 OF 120

REQUESTS FOR INFORMATION NOT ADDRESSED IN THIS CCO REMAIN IN FORCE

ALL DIMENSIONS ARE IN MILLIMETERS UNLESS OTHERWISE SHOWN

R. Vallzadeh/V. Toan/Y.L./W.L./F.C.
DESIGN OVERSIGHT
Roya Valizadeh / Vong Toan / Y. Liu
SIGN OFF DATE 02/12/10

MARK	DATE	DESCRIPTIONS	BY	CH'D	CCO#
2	02/12/10	TRAVELER MODIFICATIONS	BP	AS	24S1
1	06/19/09	TRAVELER MODIFICATIONS	BP	AS	24S1

REVISIONS

	BY	CHECKED
DESIGN	J. Otter	B. Prishtina
DETAILS	J. Otter	M. Roberts
QUANTITIES	J. Otter	M. Roberts

PREPARED FOR THE STATE OF CALIFORNIA DEPARTMENT OF TRANSPORTATION

R. Manzanarez
PROJECT ENGINEER

BRIDGE NO. 34-0006L/R
KILOMETER POST 13.2/13.9

SAN FRANCISCO OAKLAND BAY BRIDGE
EAST SPAN SEISMIC SAFETY PROJECT
SELF-ANCHORED SUSPENSION BRIDGE
(SUPERSTRUCTURE & TOWER)

TRAVELER CONNECTION DETAILS NO. 1

Rev. Date: 5-18-98

ORIGINAL SCALE IN MILLIMETERS FOR REDUCED PLANS 0 10 20 30 40 50 60 70 80 90 100

CU 04
EA 0120F1

DISREGARD PRINTS BEARING EARLIER REVISION DATES 04/15/02 03/27/02 12/19/02

SHEET 675R2 OF

FILE => I:\bb\04-012001\sas\contract plans and cco\cco\cco*24s1\5-revision 02-12-10\dgn\aktrv085.dgn

100 % PS&E

USERNAME => arivero DATE PLOTTED => 19 FEB 2010 TIME PLOTTED => 09:01:17

DIST.	COUNTY	ROUTE	KILOMETER POST TOTAL PROJECT	SHEET NO.	TOTAL SHEETS
04	SF	80	13.2/13.9	1093R1	1204

Caltrans Metric

Boshkim Prishtina
REGISTERED ENGINEER - CIVIL
12-6-04
PLANS APPROVAL DATE
REGISTERED PROFESSIONAL ENGINEER Boshkim Prishtina No. C 053561 Exp. 6/30/11 CIVIL STATE OF CALIFORNIA

The State of California or its officers or agents shall not be responsible for the accuracy or completeness of electronic copies of this plan sheet.

T.Y. LIN / MOFFATT & NICHOL
825 BATTERY STREET
SAN FRANCISCO, CA 94111

Caltrans now has a web site! To get to the web site, go to: http://www.dot.ca.gov

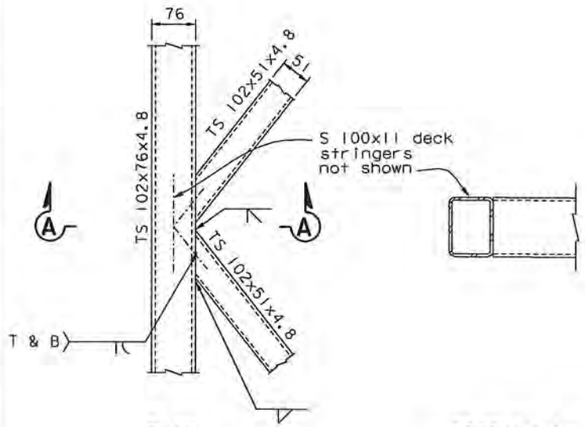

PLAN

SECTION A-A

HCS-A
1:5

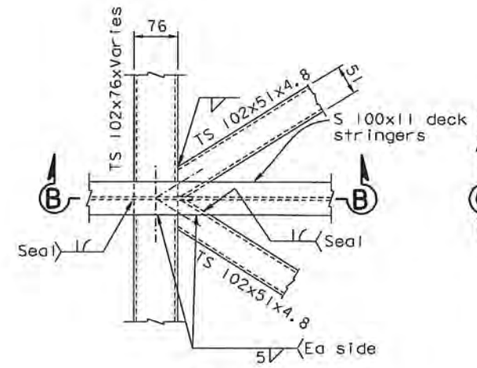

PLAN

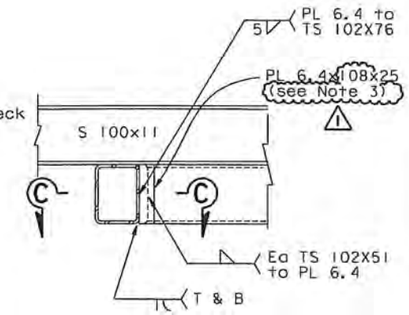

SECTION B-B

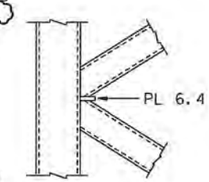

SECTION C-C

HCS-B
1:5

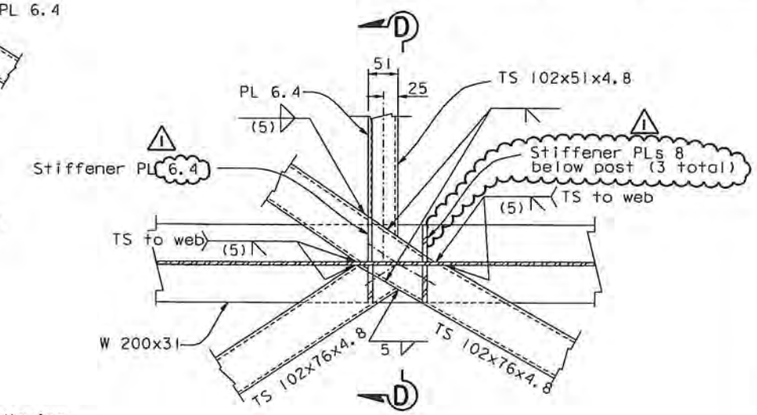

PLAN

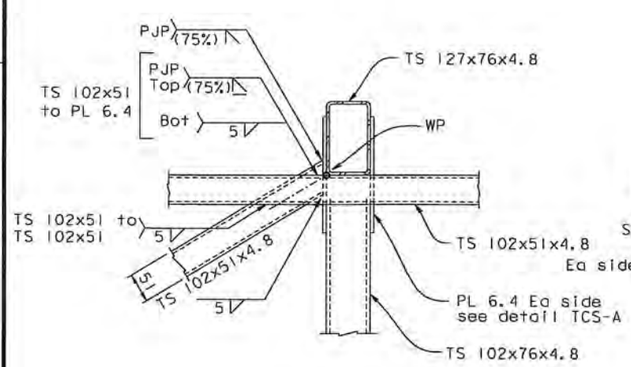

HCS-C
1:5

See also Detail TCS-A for additional welding

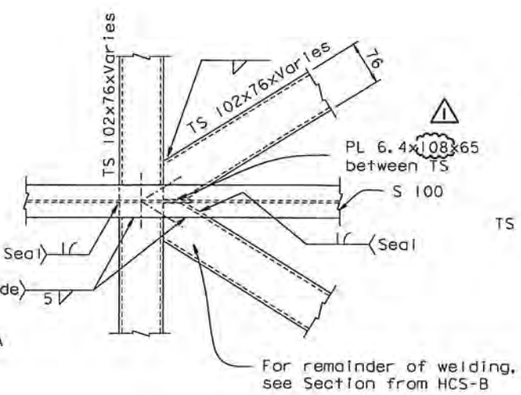

HCS-D
1:5

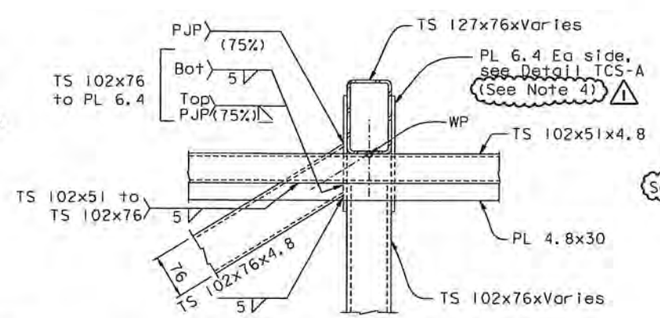

For connection of TS 102x76 Horizontal to TS 127x76, see Transverse Connection Standards (TCS)
See also Detail TCS-A for additional welding

HCS-E
1:5

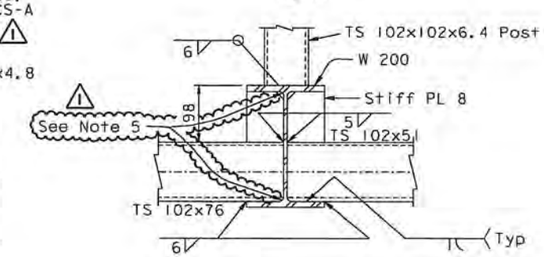

SECTION D-D

HCS-F
1:5

NOTES:

1. Seal weld at all connections whether specifically shown on connection Details or not.
2. For detail TCS-A, see "Traveler Connection Details No. 1" sheet.
3. Plate is not required where TS members do not interfere with each other.
4. Extend gusset plate as necessary to accommodate the specified weld.
5. Clip as required to clear radius.

CONTRACT CHANGE ORDER NO. 2451
SHEET 57 OF 120

REQUESTS FOR INFORMATION NOT ADDRESSED IN THIS CCO REMAIN IN FORCE

HORIZONTAL CONNECTION STANDARDS (HCS)

ALL DIMENSIONS ARE IN MILLIMETERS UNLESS OTHERWISE SHOWN

MARK	DATE	DESCRIPTIONS	BY	CH'D	CCO#
1	06/19/09	TRAVELER MODIFICATIONS	BP	AS	2451

REVISIONS

R. Vallzadeh/V. Toan/Y.L./W.L./F.C.
DESIGN OVERSIGHT
SIGN OFF DATE 06/19/09

DESIGN	BY J. Otter	CHECKED B. Prishtina	
DETAILS	BY J. Otter	CHECKED M. Roberts	
QUANTITIES	BY J. Otter	CHECKED M. Roberts	

PREPARED FOR THE STATE OF CALIFORNIA DEPARTMENT OF TRANSPORTATION

R. Manzanarez
PROJECT ENGINEER

BRIDGE NO. 34-0006L/R
KILOMETER POST 13.2/13.9

SAN FRANCISCO OAKLAND BAY BRIDGE
EAST SPAN SEISMIC SAFETY PROJECT
SELF-ANCHORED SUSPENSION BRIDGE
(SUPERSTRUCTURE & TOWER)

TRAVELER CONNECTION DETAILS NO. 2

Rev. Date: 5-18-98

ORIGINAL SCALE IN MILLIMETERS FOR REDUCED PLANS 0 10 20 30 40 50 60 70 80 90 100

CU 04
EA 0120F1

DISREGARD PRINTS BEARING EARLIER REVISION DATES

REVISION DATES (PRELIMINARY STAGE ONLY) 01/15/02 03/04/02 12/15/02

SHEET 676R1 OF

FILE => I:\bb\04-0120F1\sas\contract plans and cco\cco\cco*2451\2-revision 06-19-09\dgn\aktrv086.dgn

USERNAME => gwinrow DATE PLOTTED => 17 JUN 2009 TIME PLOTTED => 10:24:05

100 % PS&E

DIST.	COUNTY	ROUTE	KILOMETER POST TOTAL PROJECT	SHEET NO.	TOTAL SHEETS
04	SF	80	13.2/13.9	1094R1	1204

Caltrans Metric

REGISTERED ENGINEER - CIVIL

12-6-04
PLANS APPROVAL DATE

REGISTERED PROFESSIONAL ENGINEER Bashkim Prishtina No. C 053561 Exp. 6/30/11 CIVIL STATE OF CALIFORNIA

The State of California or its officers or agents shall not be responsible for the accuracy or completeness of electronic copies of this plan sheet.

T.Y. LIN / MOFFATT & NICHOL
825 BATTERY STREET
SAN FRANCISCO, CA 94111

Caltrans now has a web site! To get to the web site, go to: http://www.dot.ca.gov

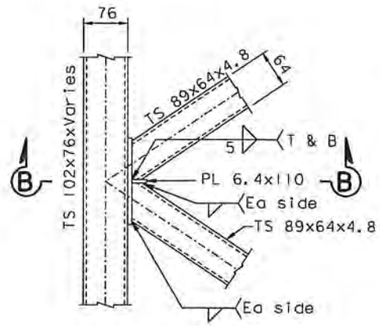

PLAN

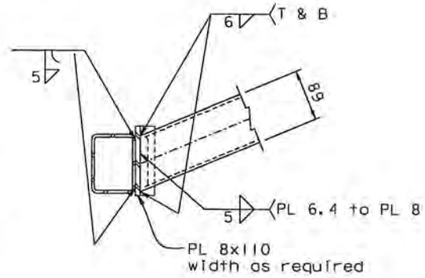

SECTION B-B

HCS-I
1:5

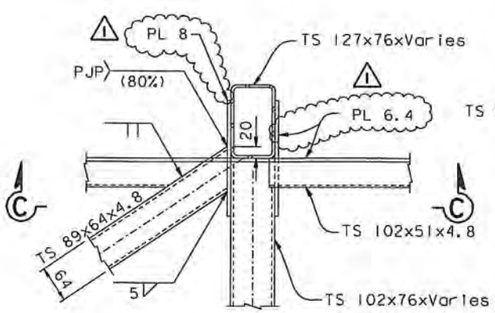

PLAN

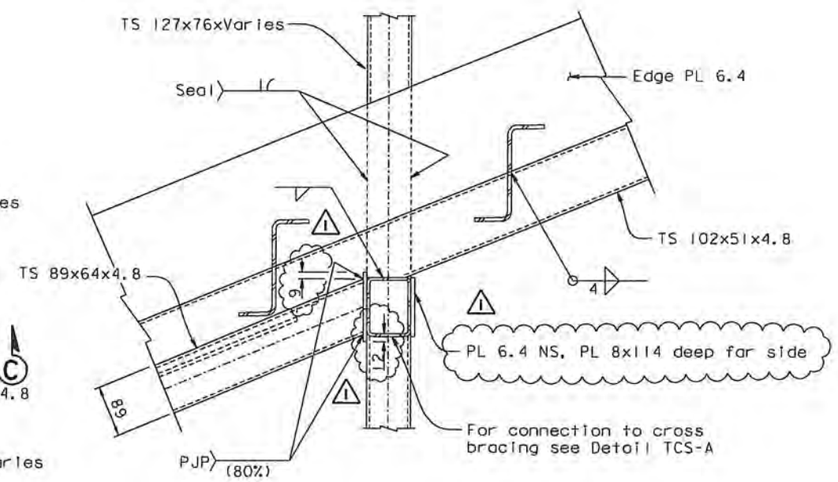

SECTION C-C

HCS-H
1:5

See also Detail TCS-A for additional welding

NOTES:

1. Seal weld at all connections whether specifically shown on Connection Details or not.
2. For detail TCS-A, see "Traveler Connection Details No. 1" sheet.

CONTRACT CHANGE ORDER NO. 24S1
SHEET 58 OF 120

REQUESTS FOR INFORMATION NOT ADDRESSED IN THIS CCO REMAIN IN FORCE

HORIZONTAL CONNECTION STANDARDS (HCS)

ALL DIMENSIONS ARE IN MILLIMETERS UNLESS OTHERWISE SHOWN

SAN FRANCISCO OAKLAND BAY BRIDGE
EAST SPAN SEISMIC SAFETY PROJECT
SELF-ANCHORED SUSPENSION BRIDGE
(SUPERSTRUCTURE & TOWER)

TRAVELER CONNECTION DETAILS NO. 3

R. Valizadeh/V. Toan/Y.L./W.L./F.C.
DESIGN OVERSIGHT
SIGN OFF DATE 06/19/09

MARK	DATE	REVISIONS	BY	CH'D	CCO#
1	06/19/09	TRAVELERS MODIFICATIONS	BD	AS	24S1

	BY	CHECKED
DESIGN	J. Otter	B. Prishtina
DETAILS	J. Otter	M. Roberts
QUANTITIES	J. Otter	M. Roberts

PREPARED FOR THE STATE OF CALIFORNIA DEPARTMENT OF TRANSPORTATION

R. Manzanarez
PROJECT ENGINEER

BRIDGE NO. 34-0006L/R
KILOMETER POST 13.2/13.9

CU 04
EA 0120F1

DISREGARD PRINTS BEARING EARLIER REVISION DATES

REVISION DATES (PRELIMINARY STAGE ONLY) 04/09/02 01/20/02 12/19/02

SHEET 677R1 OF

Rev. Date: 5-18-98

ORIGINAL SCALE IN MILLIMETERS FOR REDUCED PLANS 0 10 20 30 40 50 60 70 80 90 100

FILE => I:\bb\04-012001\sas\contract plans and cco\cco\cco#24s1\2-revision 06-19-09\dgn\aktrv087.dgn

100 % PS&E

USERNAME => awinrow DATE PLOTTED => 17 JUN 2009 TIME PLOTTED => 10:24:54

DIST.	COUNTY	ROUTE	KILOMETER POST TOTAL PROJECT	SHEET NO.	TOTAL SHEETS
04	SF	80	13.2/13.9	1096R2	1204

Caltrans Metric

REGISTERED ENGINEER - CIVIL

12-6-04
PLANS APPROVAL DATE

REGISTERED PROFESSIONAL ENGINEER Bashkim Prishtina No. C 053561 Exp. 6/30/11 CIVIL STATE OF CALIFORNIA

The State of California or its officers or agents shall not be responsible for the accuracy or completeness of electronic copies of this plan sheet.

T.Y. LIN / MOFFATT & NICHOL
825 BATTERY STREET
SAN FRANCISCO, CA 94111

Caltrans now has a web site! To get to the web site, go to: http://www.dot.ca.gov

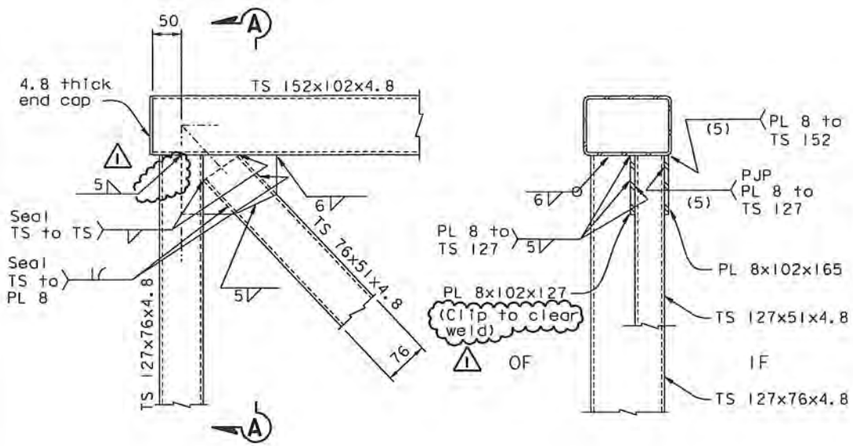

ELEVATION

SECTION A-A

VCS-A
1:5

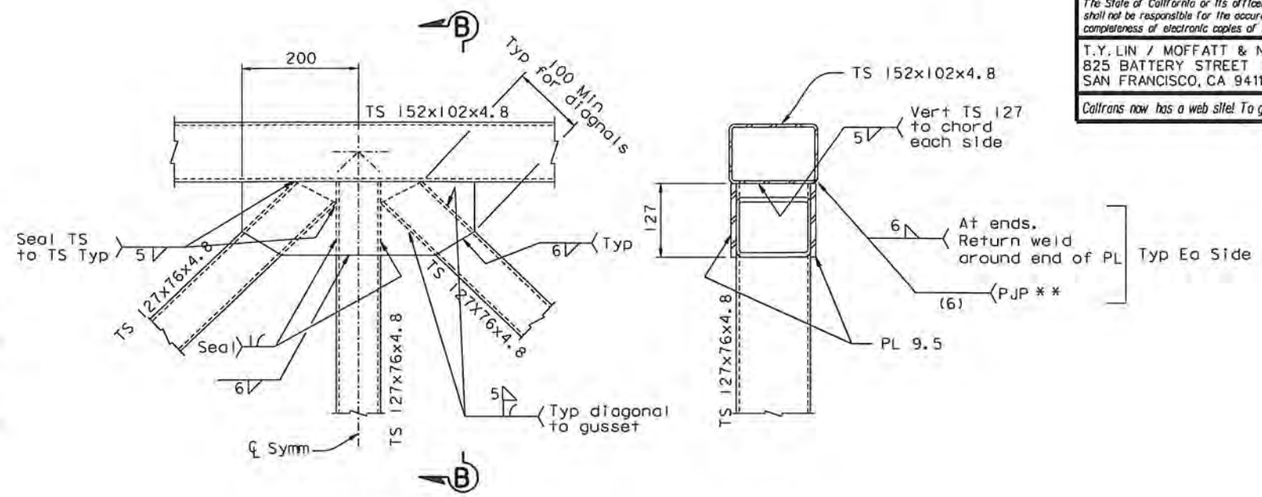

ELEVATION

SECTION B-B

VCS-C
1:5

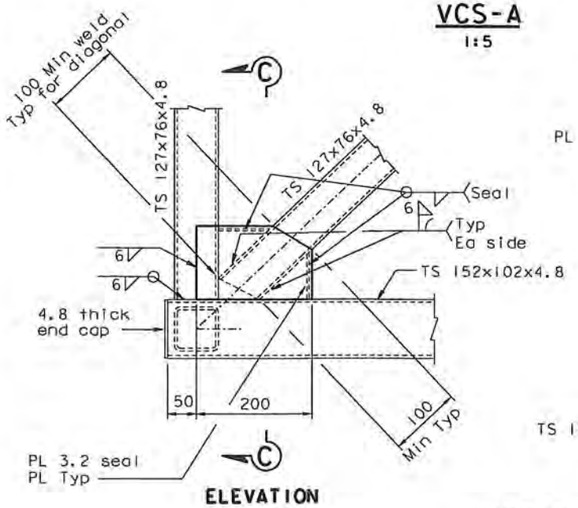

ELEVATION

VCS-B
1:5

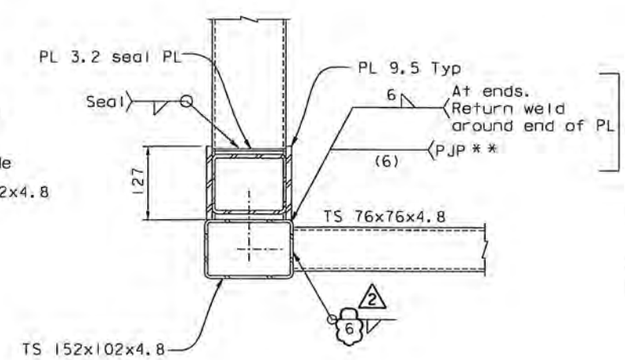

SECTION C-C

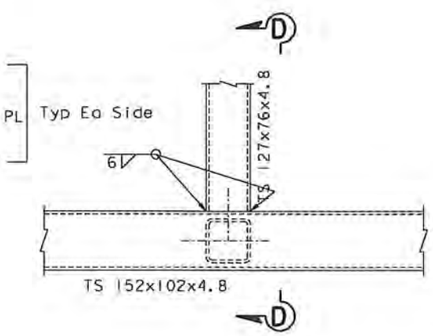

ELEVATION

VCS-D
1:5

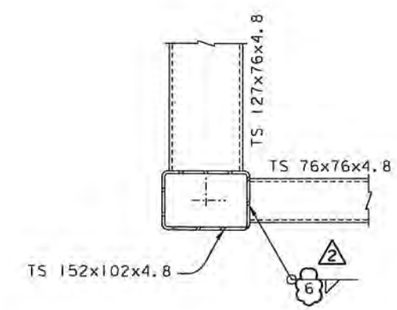

SECTION D-D

** Gap or preparation as required to achieve effective throat thickness.

CONTRACT CHANGE ORDER NO. 24S1
SHEET 59 OF 120

REQUESTS FOR INFORMATION NOT ADDRESSED IN THIS CCO REMAIN IN FORCE

VERTICAL CONNECTION STANDARD (VCS)

ALL DIMENSIONS ARE IN MILLIMETERS UNLESS OTHERWISE SHOWN

R. Valizadeh/V. Toan/Y.L./W.L./F.C.
DESIGN OVERSIGHT
SIGN OFF DATE 02/12/10

MARK	DATE	DESCRIPTIONS	BY	CH'D	CCO#
2	02/12/10	TRAVELER MODIFICATIONS	BP	AS	24S1
1	06/19/09	TRAVELER MODIFICATIONS	BP	AS	24S1

REVISIONS

	BY	CHECKED
DESIGN	J. Otter	B. Prishtina
DETAILS	J. Otter	M. Roberts
QUANTITIES	J. Otter	M. Roberts

PREPARED FOR THE STATE OF CALIFORNIA DEPARTMENT OF TRANSPORTATION

R. Manzanarez
PROJECT ENGINEER

BRIDGE NO. 34-0006L/R
KILOMETER POST 13.2/13.9

SAN FRANCISCO OAKLAND BAY BRIDGE
EAST SPAN SEISMIC SAFETY PROJECT
SELF-ANCHORED SUSPENSION BRIDGE
(SUPERSTRUCTURE & TOWER)

TRAVELER CONNECTION DETAILS NO. 5

Rev. Date: 5-18-98

ORIGINAL SCALE IN MILLIMETERS FOR REDUCED PLANS 0 10 20 30 40 50 60 70 80 90 100

CU 04
EA 0120F1

DISREGARD PRINTS BEARING EARLIER REVISION DATES

REVISION DATES (PRELIMINARY STAGE ONLY) 04/29/02 01/28/02 12/19/02

SHEET 679R2 OF

FILE => I:\bb\04-0120F1\sos\contract plans and cco\cco\cco*24s1\5-revision 02-12-10\dgn\aktrv089.dgn

100 % PS&E

USERNAME => arivera DATE PLOTTED => 19 FEB 2010 TIME PLOTTED => 09:02:25

DIST.	COUNTY	ROUTE	KILOMETER POST TOTAL PROJECT	SHEET NO.	TOTAL SHEETS
04	SF	80	13.2/13.9	1097R1	1204

Caltrans Metric

REGISTERED ENGINEER - CIVIL

12-6-04
PLANS APPROVAL DATE

REGISTERED PROFESSIONAL ENGINEER Bashkim Prishtina No. C 053561 Exp. 6/30/11 CIVIL STATE OF CALIFORNIA

The State of California or its officers or agents shall not be responsible for the accuracy or completeness of electronic copies of this plan sheet.

T.Y. LIN / MOFFATT & NICHOL
825 BATTERY STREET
SAN FRANCISCO, CA 94111

Caltrans now has a web site! To get to the web site, go to: http://www.dot.ca.gov

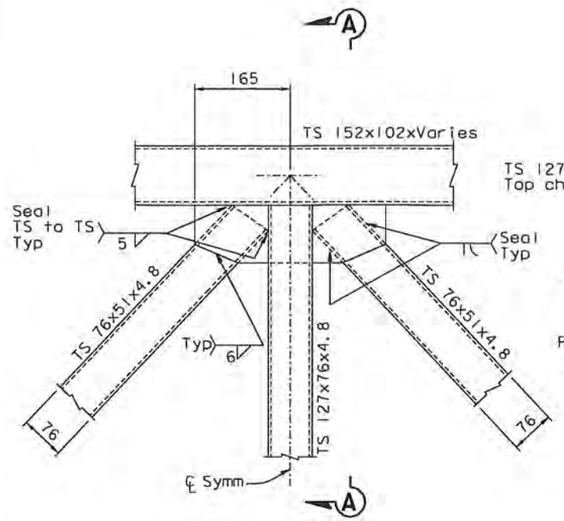

ELEVATION

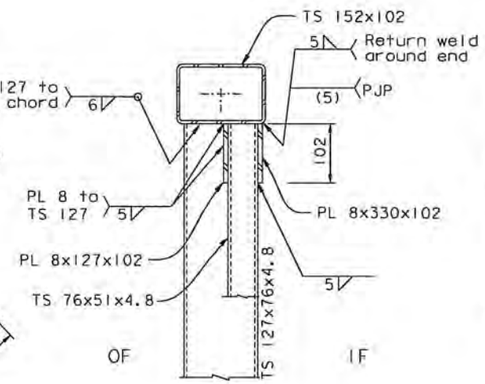

SECTION A-A

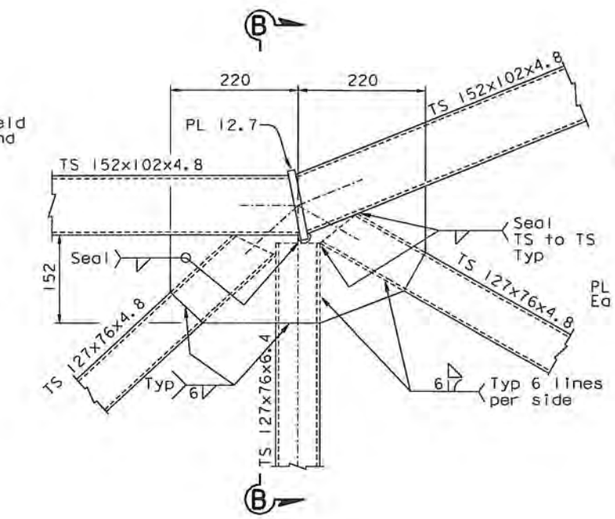

ELEVATION

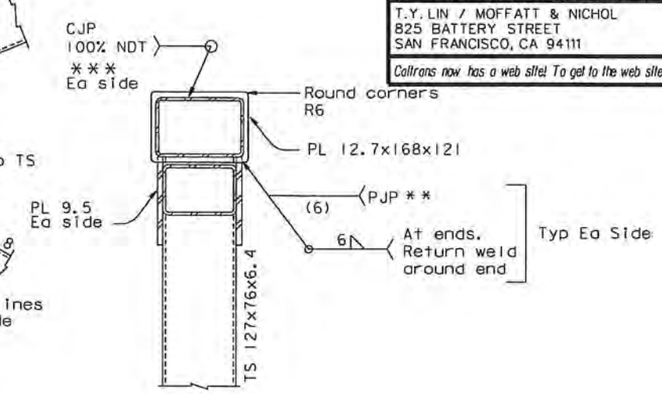

SECTION B-B

** Denotes gap or preparation as required to achieve effective throat

*** Denotes Verify that there are no laminations in this plate.

VCS-E
1:5

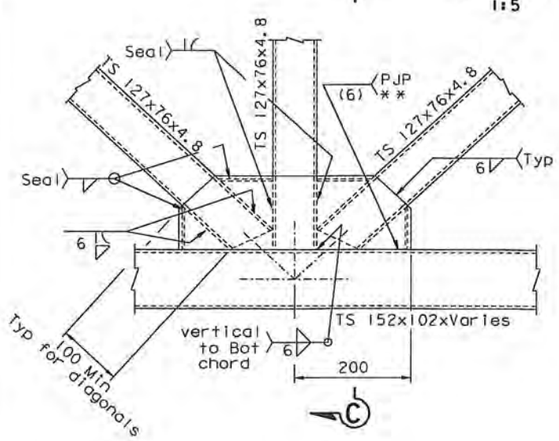

ELEVATION

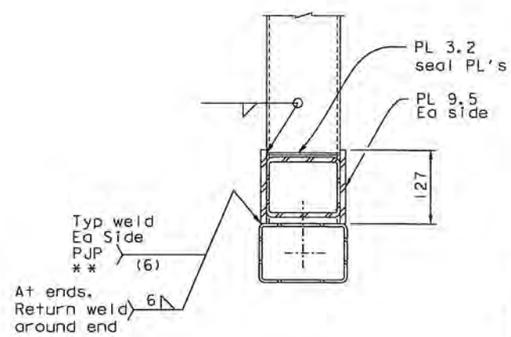

SECTION C-C

VCS-G
1:5

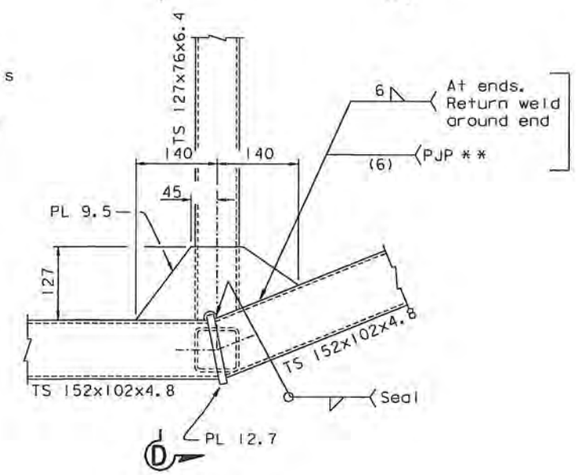

ELEVATION

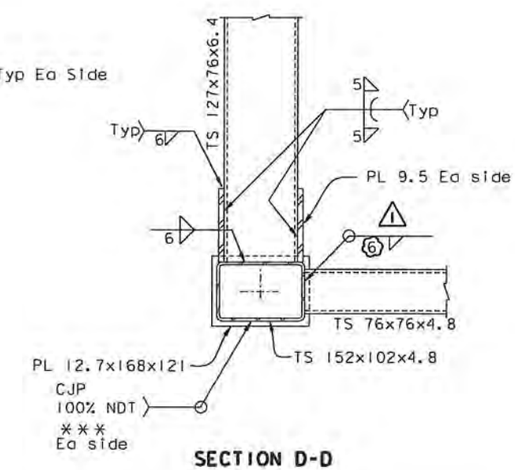

SECTION D-D

VCS-F
1:5

CONTRACT CHANGE ORDER NO. 24S1
SHEET 60 OF 120

REQUESTS FOR INFORMATION NOT ADDRESSED IN THIS CCO REMAIN IN FORCE

VERTICAL CONNECTION STANDARDS (VCS)

VCS-H
1:5

ALL DIMENSIONS ARE IN MILLIMETERS UNLESS OTHERWISE SHOWN

R. Vallzadeh/V. Toan/Y.L./W.L./F.C.
DESIGN OVERSIGHT
Roger Vallzadeh / Vong Toan / Y. Liu
SIGN OFF DATE 02/12/10

MARK	DATE	DESCRIPTIONS	BY	CH'D	CCO#
1	02/12/10	TRAVELER MODIFICATIONS	BP	AS	24S1

REVISIONS

	BY	CHECKED
DESIGN	J. Otter	K. Prishtina
DETAILS	J. Otter	M. Roberts
QUANTITIES	J. Otter	M. Roberts

PREPARED FOR THE STATE OF CALIFORNIA DEPARTMENT OF TRANSPORTATION

R. Manzanarez
PROJECT ENGINEER

BRIDGE NO. 34-0006L/R
KILOMETER POST 13.2/13.9

SAN FRANCISCO OAKLAND BAY BRIDGE
EAST SPAN SEISMIC SAFETY PROJECT
SELF-ANCHORED SUSPENSION BRIDGE
(SUPERSTRUCTURE & TOWER)

TRAVELER CONNECTION DETAILS NO. 6

Rev. Date: 5-18-98

ORIGINAL SCALE IN MILLIMETERS FOR REDUCED PLANS 0 10 20 30 40 50 60 70 80 90 100

CU 04
EA 0120F1

DISREGARD PRINTS BEARING EARLIER REVISION DATES

REVISION DATES (PRELIMINARY STAGE ONLY) 04/09/02 01/07/02 12/13/02

SHEET 680R1 OF

FILE => I:\bb\04-0120F1\sas\contract plans and cco\cco\cco#24s1\5-revision 02-12-10\dgn\aktrv090.dgn

100 % PS&E

USERNAME => arivera DATE PLOTTED => 19 FEB 2010 TIME PLOTTED => 09:03:17

DIST.	COUNTY	ROUTE	KILOMETER POST TOTAL PROJECT	SHEET NO.	TOTAL SHEETS
04	SF	80	13.2/13.9	1098R1	1204

Caltrans Metric

REGISTERED ENGINEER - CIVIL

12-6-04
PLANS APPROVAL DATE

REGISTERED PROFESSIONAL ENGINEER Bashkim Prishtina No. C 053561 Exp. 6/30/11 CIVIL STATE OF CALIFORNIA

The State of California or its officers or agents shall not be responsible for the accuracy or completeness of electronic copies of this plan sheet.

T.Y. LIN / MOFFATT & NICHOL
825 BATTERY STREET
SAN FRANCISCO, CA 94111

Caltrans now has a web site! To get to the web site, go to: http://www.dot.ca.gov

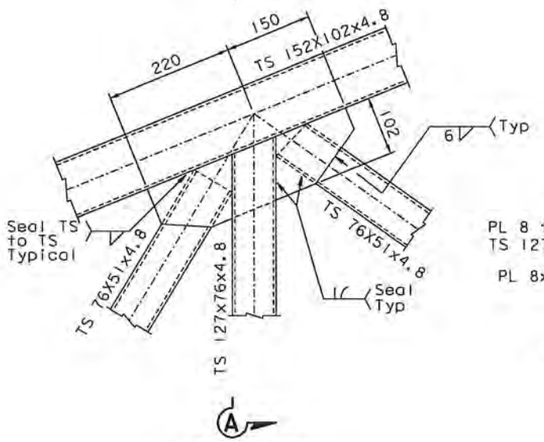

ELEVATION

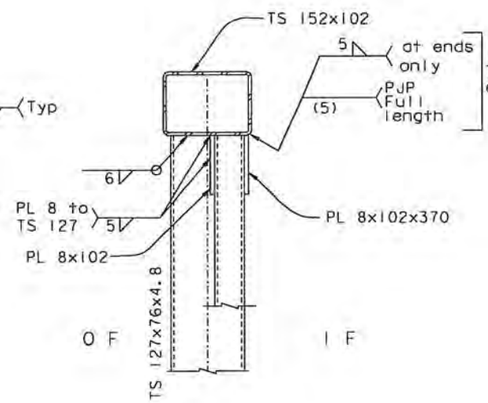

SECTION A-A

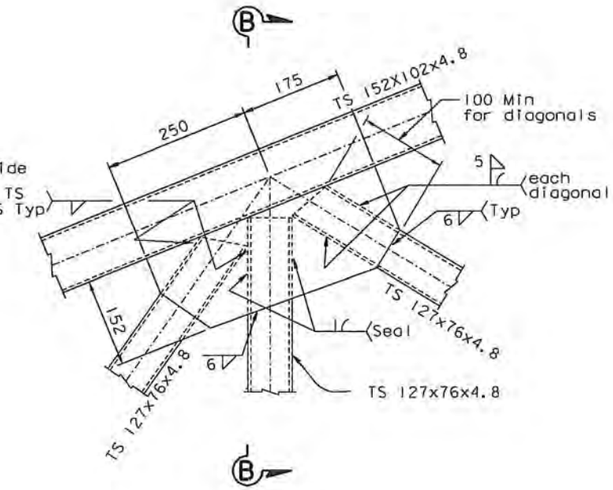

ELEVATION

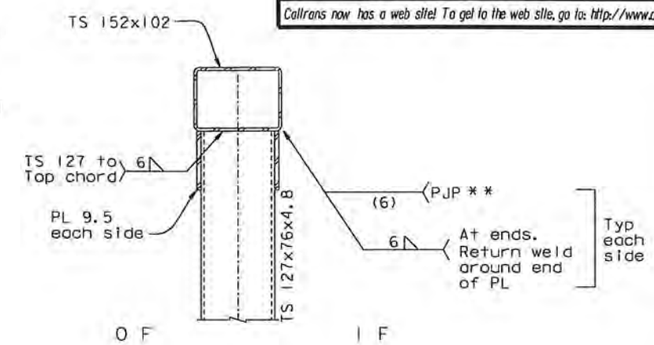

SECTION B-B

VCS-I
1:5

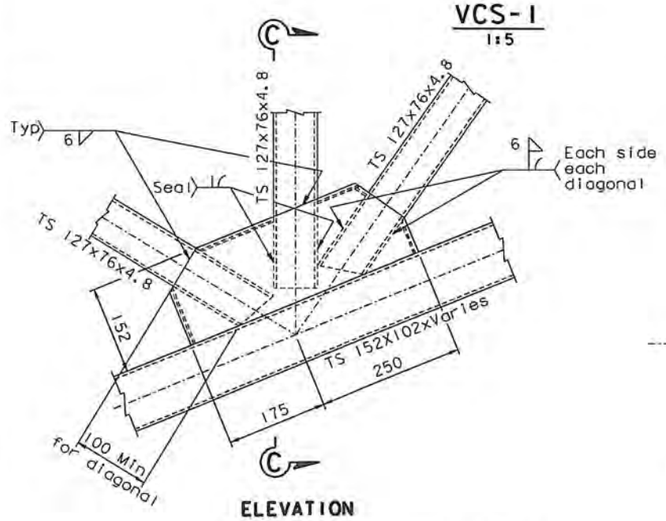

ELEVATION

VCS-K
1:5

* * Denotes gap or preparation as required to achieve effective throat

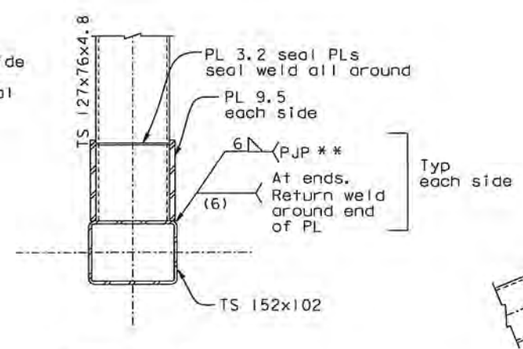

SECTION C-C

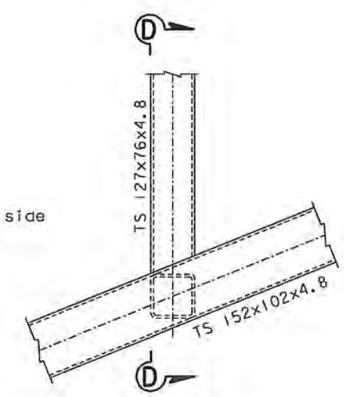

ELEVATION

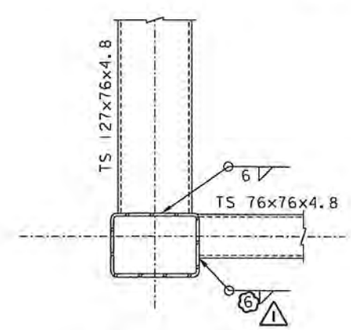

SECTION D-D
Plates are not shown

VCS-J
1:5

* * Denotes gap or preparation as required to achieve effective throat

VCS-L
1:5

CONTRACT CHANGE ORDER NO. 24S1
SHEET 61 OF 120

REQUESTS FOR INFORMATION NOT ADDRESSED IN THIS CCO REMAIN IN FORCE

VERTICAL CONNECTION STANDARDS (VCS)

ALL DIMENSIONS ARE IN MILLIMETERS UNLESS OTHERWISE SHOWN

R. Valizadeh/V. Toan/Y.L./W.L./F.C.
DESIGN OVERSIGHT
Roya Valizadeh / Vang Toan / Y. Liu
SIGN OFF DATE 02/12/10

MARK	DATE	DESCRIPTIONS	BY	CH'D	CCO#
1	02/12/10	TRAVELER MODIFICATIONS	BP	AS	24S1

REVISIONS

DESIGN	BY J. Otter	CHECKED K. Prishtina	
DETAILS	BY J. Otter	CHECKED M. Roberts	
QUANTITIES	BY J. Otter	CHECKED M. Roberts	

PREPARED FOR THE STATE OF CALIFORNIA DEPARTMENT OF TRANSPORTATION

R. Manzanarez
PROJECT ENGINEER

BRIDGE NO. 34-0006L/R
KILOMETER POST 13.2/13.9

SAN FRANCISCO OAKLAND BAY BRIDGE
EAST SPAN SEISMIC SAFETY PROJECT
SELF-ANCHORED SUSPENSION BRIDGE
(SUPERSTRUCTURE & TOWER)

TRAVELER CONNECTION DETAILS NO. 7

Rev. Date: 5-18-98

ORIGINAL SCALE IN MILLIMETERS FOR REDUCED PLANS 0 10 20 30 40 50 60 70 80 90 100

CU 04
EA 0120F1

DISREGARD PRINTS BEARING EARLIER REVISION DATES

REVISION DATES (PRELIMINARY STAGE ONLY) 01/25/02 01/24/02 12/13/02

SHEET 681R1 OF

FILE => I:\bb\04-0120F1\sas\contract plans and cco\cco\cco#24s1\5-revision 02-12-10\dgn\aktrv091.dgn

100 % PS&E

USERNAME => arivera DATE PLOTTED => 19 FEB 2010 TIME PLOTTED => 09:04:08

DIST.	COUNTY	ROUTE	KILOMETER POST TOTAL PROJECT	SHEET NO.	TOTAL SHEETS
04	SF	80	13.2/13.9	1099R3	1204

Caltrans Metric

REGISTERED ENGINEER - CIVIL

12-6-04
PLANS APPROVAL DATE

REGISTERED PROFESSIONAL ENGINEER Bashkim Prishtina No. C 053561 Exp. 6/30/11 CIVIL STATE OF CALIFORNIA

The State of California or its officers or agents shall not be responsible for the accuracy or completeness of electronic copies of this plan sheet.

T.Y. LIN / MOFFATT & NICHOL
825 BATTERY STREET
SAN FRANCISCO, CA 94111

Caltrans now has a web site! To get to the web site, go to: http://www.dot.ca.gov

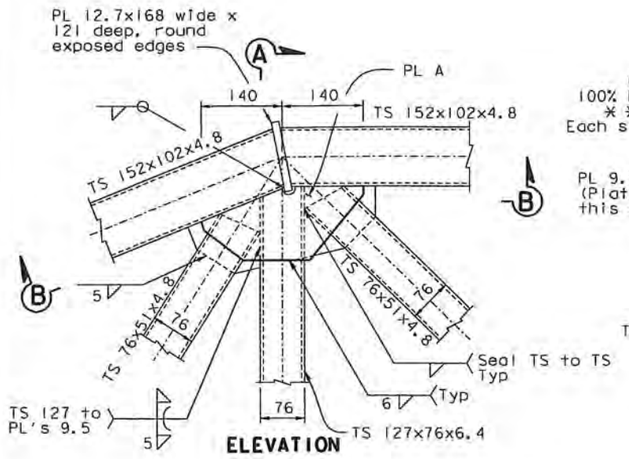

ELEVATION

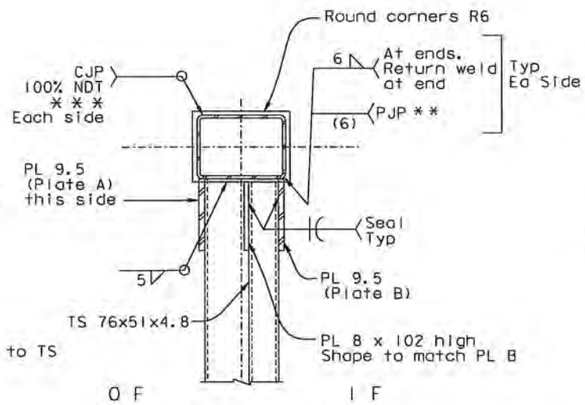

SECTION A-A

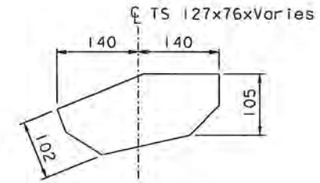

PLATE B DETAIL

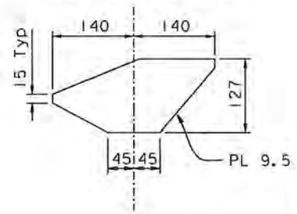

PLATE A DETAIL

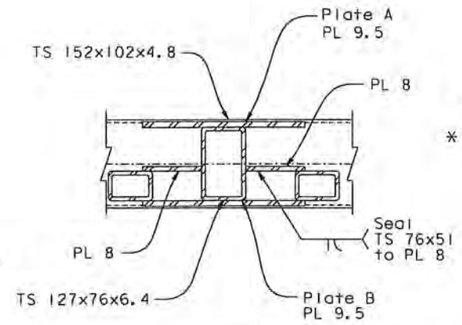

SECTION B-B

** Denotes gap or preparation as required to achieve effective throat

*** Denotes verify that there are no laminations in this plate

VCS-M
1:5

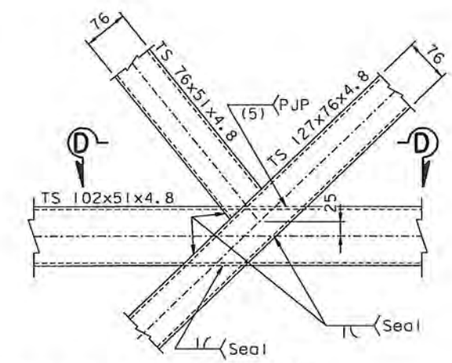

ELEVATION

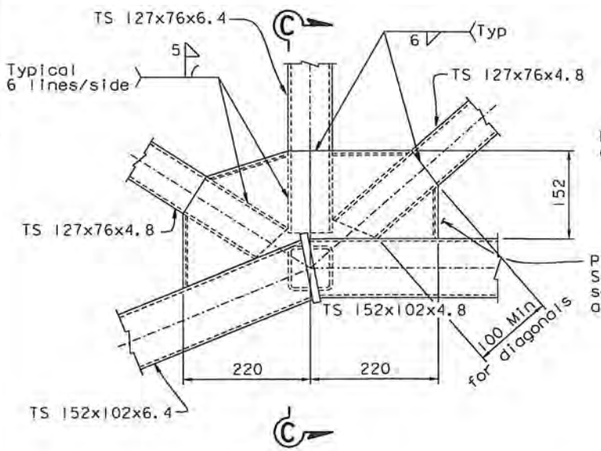

ELEVATION

VCS-N
1:5

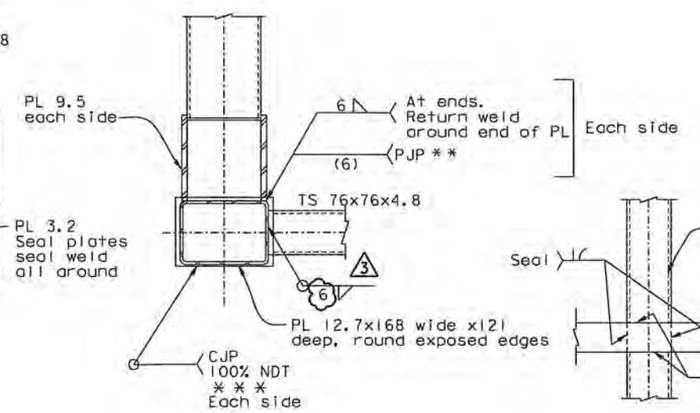

SECTION C-C

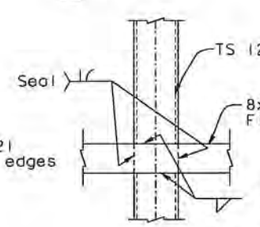

VCS-O
1:5

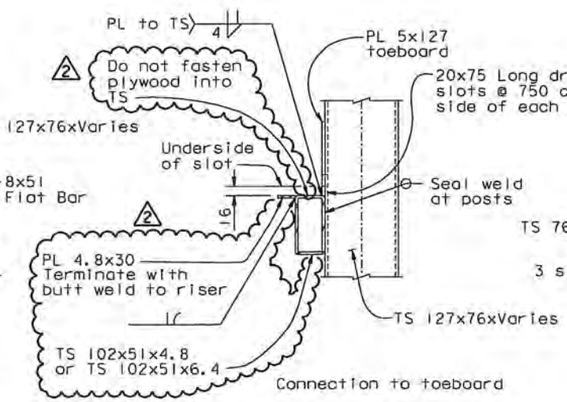

VCS-P
1:5

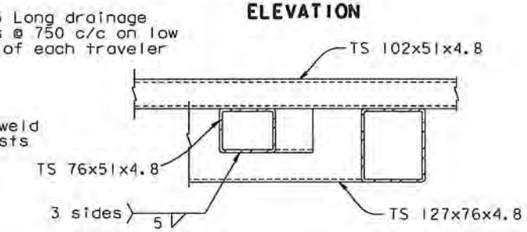

SECTION D-D

VCS-Q
1:5

REVISION SUPERSEDES REVISION

CONTRACT CHANGE ORDER NO. 24S1
SHEET 62 OF 120

REQUESTS FOR INFORMATION NOT ADDRESSED IN THIS CCO REMAIN IN FORCE

MARK	DATE	DESCRIPTIONS	BY	CH'D	CCO#
3	02/12/10	TRAVELER MODIFICATIONS	BP	AS	24S1
2	06/19/09	TRAVELER MODIFICATIONS	BP	AS	24S1
1	07/20/07	RAIL CHANGE & MISCELLANEOUS DETAILS	BP	NV	24

REVISIONS

VERTICAL CONNECTION STANDARDS (VCS)

ALL DIMENSIONS ARE IN MILLIMETERS UNLESS OTHERWISE SHOWN

	BY	CHECKED
DESIGN	J. Otter	B. Prishtina
DETAILS	J. Otter	M. Roberts
QUANTITIES	J. Otter	M. Roberts

PREPARED FOR THE STATE OF CALIFORNIA DEPARTMENT OF TRANSPORTATION

R. Manzanarez
PROJECT ENGINEER

BRIDGE NO. 34-0006L/R
KILOMETER POST 13.2/13.9

SAN FRANCISCO OAKLAND BAY BRIDGE
EAST SPAN SEISMIC SAFETY PROJECT
SELF-ANCHORED SUSPENSION BRIDGE
(SUPERSTRUCTURE & TOWER)

TRAVELER CONNECTION DETAILS NO. 8

R. Vallizadeh/V. Toan/Y.L./W.L./F.C.
DESIGN OVERSIGHT
SIGN OFF DATE 02/12/10

Rev. Date: 5-18-98

ORIGINAL SCALE IN MILLIMETERS FOR REDUCED PLANS 0 10 20 30 40 50 60 70 80 90 100

CU 04
EA 0120F1

DISREGARD PRINTS BEARING EARLIER REVISION DATES 01/07/02 01/07/02 12/11/02

REVISION DATES (PRELIMINARY STAGE ONLY)

SHEET 682R3 OF

FILE => I:\bb\04-012001\sas\contract plans and cco\cco\cco#24s1\5-revision 02-12-10\dgn\aktrv092.dgn

100 % PS&E

USERNAME => arivero DATE PLOTTED => 19 FEB 2010 TIME PLOTTED => 09:05:18

DIST.	COUNTY	ROUTE	KILOMETER POST TOTAL PROJECT	SHEET NO.	TOTAL SHEETS
04	SF	80	13.2/13.9	1100R2	1204

Caltrans Metric

REGISTERED ENGINEER - CIVIL

12-6-04
PLANS APPROVAL DATE

REGISTERED PROFESSIONAL ENGINEER Bashkim Prishtina No. C 053561 Exp. 6/30/11 CIVIL STATE OF CALIFORNIA

The State of California or its officers or agents shall not be responsible for the accuracy or completeness of electronic copies of this plan sheet.

T.Y. LIN / MOFFATT & NICHOL
825 BATTERY STREET
SAN FRANCISCO, CA 94111

Caltrans now has a web site! To get to the web site, go to: http://www.dot.ca.gov

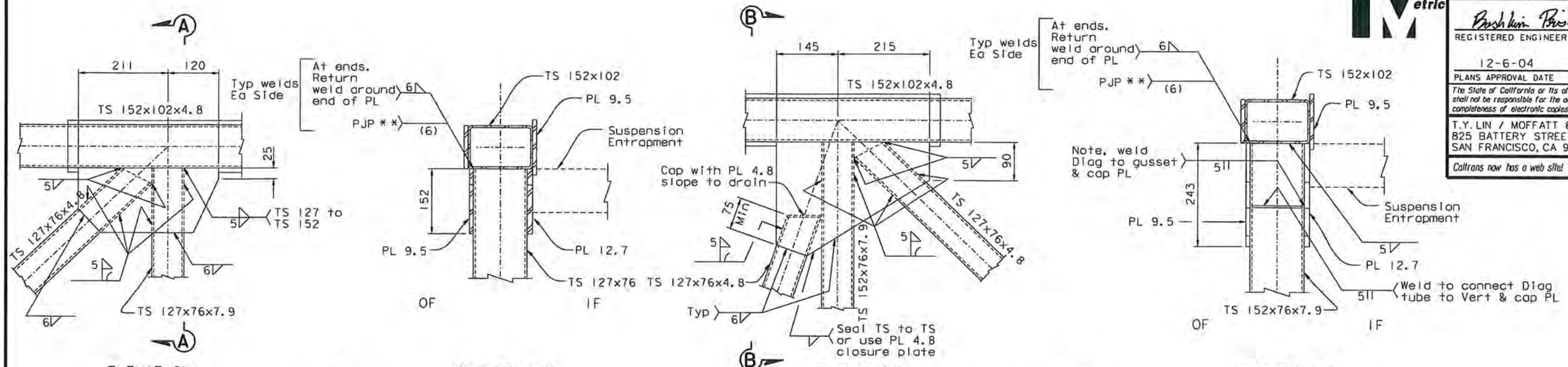

ELEVATION — SECTION A-A — ELEVATION — SECTION B-B

VCS-R
1:5

See also "Suspension Connection Details" sheets for details not shown.

VCS-S
1:5

** Denotes gap or preparation as required to achieve effective throat

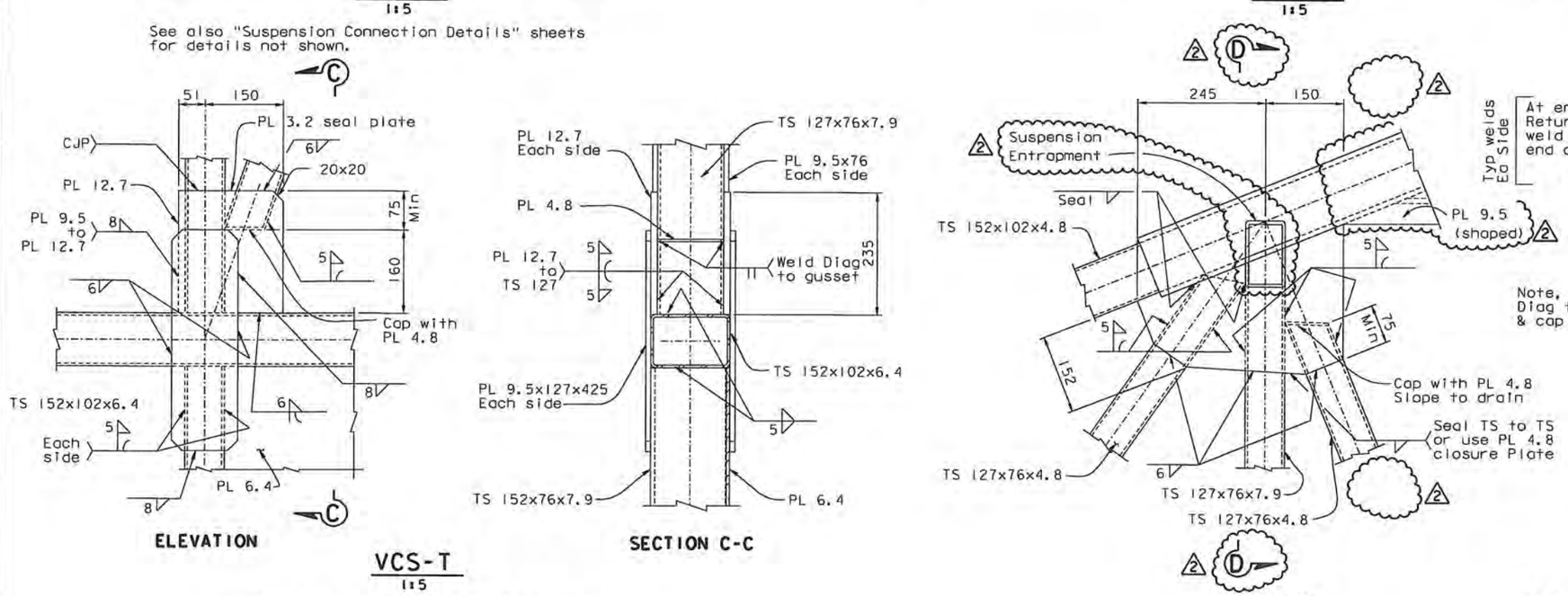

ELEVATION — SECTION C-C — ELEVATION — SECTION D-D

VCS-T
1:5

VCS-U
1:5

For details not shown, see "Traveler Suspension Connection Details" sheets

REVISION 2 SUPERSEDES REVISION 1

CONTRACT CHANGE ORDER NO. 2451
SHEET 63 OF 120

REQUESTS FOR INFORMATION NOT ADDRESSED IN THIS CCO REMAIN IN FORCE

VERTICAL CONNECTION STANDARDS (VCS)

ALL DIMENSIONS ARE IN MILLIMETERS UNLESS OTHERWISE SHOWN

MARK	DATE	DESCRIPTIONS	BY	CH'D	CCO#
2	06/19/09	TRAVELER MODIFICATIONS	BP	AS	2451
1	01/20/07	RAIL CHANGE & MISCELLANEOUS DETAILS	BP	NV	24

REVISIONS

R. Valizadeh/V. Toan/Y.L./W.L./F.C.
DESIGN OVERSIGHT
SIGN OFF DATE 06/19/09

DESIGN — BY J. Otter — CHECKED B. Prishtina
DETAILS — BY J. Otter — CHECKED M. Roberts
QUANTITIES — BY J. Otter — CHECKED M. Roberts

PREPARED FOR THE STATE OF CALIFORNIA DEPARTMENT OF TRANSPORTATION

R. Manzanarez
PROJECT ENGINEER

BRIDGE NO. 34-0006L/R
KILOMETER POST 13.2/13.9

SAN FRANCISCO OAKLAND BAY BRIDGE
EAST SPAN SEISMIC SAFETY PROJECT
SELF-ANCHORED SUSPENSION BRIDGE
(SUPERSTRUCTURE & TOWER)

TRAVELER CONNECTION DETAILS NO. 9

Rev. Date: 5-18-98

ORIGINAL SCALE IN MILLIMETERS FOR REDUCED PLANS 0 10 20 30 40 50 60 70 80 90 100

CU 04
EA 0120F1

DISREGARD PRINTS BEARING EARLIER REVISION DATES — REVISION DATES (PRELIMINARY STAGE ONLY) 04/25/02 07/24/02 12/19/02

SHEET 683R2 OF

FILE => I:\bb\04-01200I\sas\contract plans and cco\cco\cco#24si\2-revision 06-19-09\dgn\aktrv093.dgn

100 % PS&E

USERNAME => gwinrow DATE PLOTTED => 17 JUN 2009 TIME PLOTTED => 10:28:16

DIST.	COUNTY	ROUTE	KILOMETER POST TOTAL PROJECT	SHEET NO.	TOTAL SHEETS
04	SF	80	13.2/13.9	1101R2	1204

Caltrans Metric

REGISTERED ENGINEER - CIVIL

12-6-04

PLANS APPROVAL DATE

REGISTERED PROFESSIONAL ENGINEER Boshkim Prishtina No. C 053561 Exp. 6/30/11 CIVIL STATE OF CALIFORNIA

The State of California or its officers or agents shall not be responsible for the accuracy or completeness of electronic copies of this plan sheet.

T.Y. LIN / MOFFATT & NICHOL
825 BATTERY STREET
SAN FRANCISCO, CA 94111

Caltrans now has a web site! To get to the web site, go to: http://www.dot.ca.gov

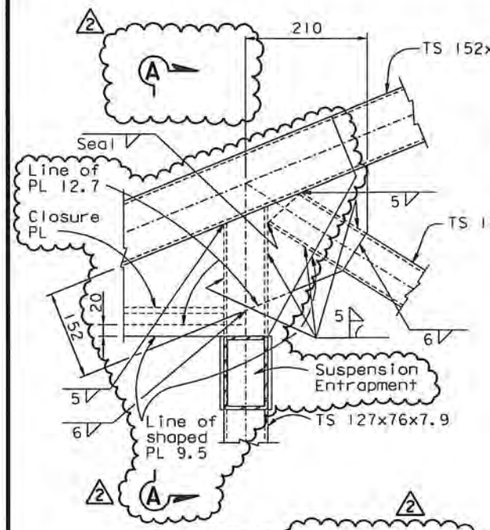

VCS-V
1:5

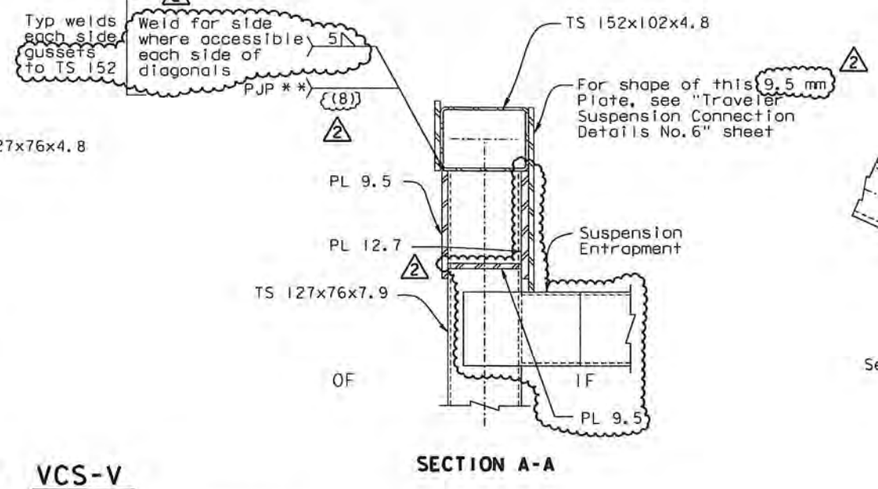

For details not shown, see "Traveler Suspension Connection Details" sheets

** Denotes gap or preparation as required to achieve effective throat

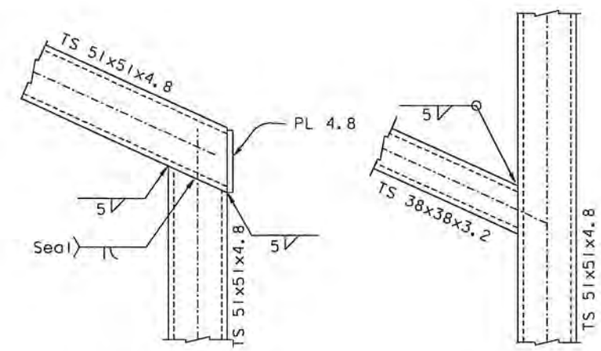

VCS-X
1:2.5

VCS-Y
1:2.5

HANDRAIL DETAILS

NOTE: Seal weld all around (UNO)

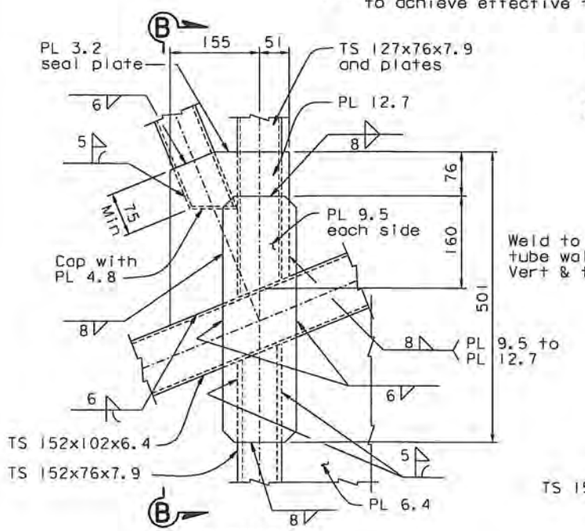

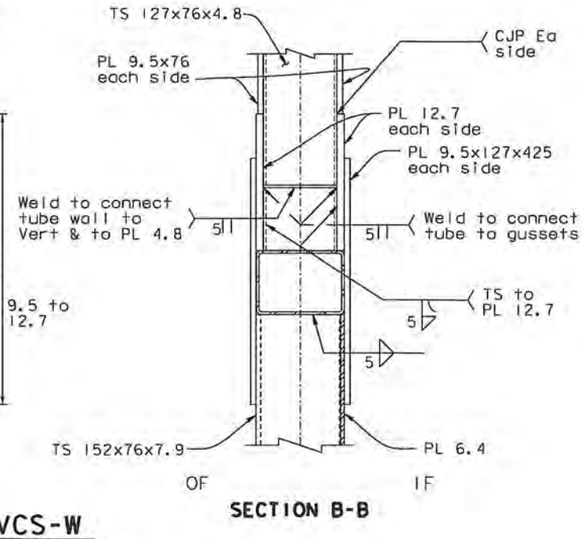

VCS-W
1:5

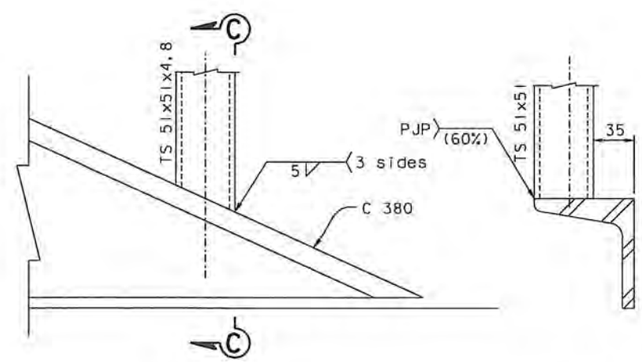

VCS-Z
1:2.5

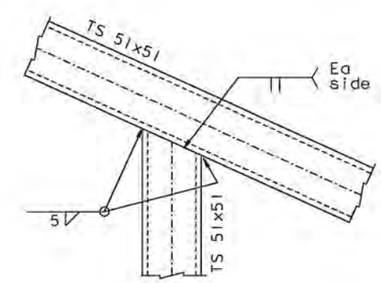

VCS-AA
1:5

REVISION 2 SUPERSEDES REVISION 1

CONTRACT CHANGE ORDER NO. 2451
SHEET 64 OF 120

VERTICAL CONNECTION STANDARDS (VCS)

REQUESTS FOR INFORMATION NOT ADDRESSED IN THIS CCO REMAIN IN FORCE

ALL DIMENSIONS ARE IN MILLIMETERS UNLESS OTHERWISE SHOWN

MARK	DATE	DESCRIPTIONS	BY	CH'D	CCO#
2	08/21/09	TRAVELER MODIFICATIONS	BP	NV	2451
1	07/20/07	RAIL CHANGE & MISCELLANEOUS DETAILS	BP	NV	24

REVISIONS

R. Vallzadeh/V. Toan/Y.L./W.L./F.C.
DESIGN OVERSIGHT
SIGN OFF DATE 08/21/09

DESIGN BY J. Otter CHECKED B. Prishtina
DETAILS BY J. Otter CHECKED M. Roberts
QUANTITIES BY J. Otter CHECKED M. Roberts

PREPARED FOR THE STATE OF CALIFORNIA DEPARTMENT OF TRANSPORTATION

R. Manzanarez
PROJECT ENGINEER

BRIDGE NO. 34-0006L/R
KILOMETER POST 13.2/13.9

SAN FRANCISCO OAKLAND BAY BRIDGE
EAST SPAN SEISMIC SAFETY PROJECT
SELF-ANCHORED SUSPENSION BRIDGE
(SUPERSTRUCTURE & TOWER)

TRAVELER CONNECTION DETAILS NO. 10

Rev. Date: 5-18-98

ORIGINAL SCALE IN MILLIMETERS FOR REDUCED PLANS 0 10 20 30 40 50 60 70 80 90 100

CU 04
EA 0120F1

DISREGARD PRINTS BEARING EARLIER REVISION DATES

REVISION DATES (PRELIMINARY STAGE ONLY) 01/09/02 01/29/02 12/13/02

SHEET 684R2 OF

FILE => I:\bb\04-0120F1\sas\contract plans and cco\cco\cco#2451\3-revision 08-21-09\dgn\aktrv094.dgn

100 % PS&E

USERNAME => arivera DATE PLOTTED => 21 AUG 2009 TIME PLOTTED => 14:56:52

DIST.	COUNTY	ROUTE	KILOMETER POST TOTAL PROJECT	SHEET NO.	TOTAL SHEETS
04	SF	80	13.2/13.9	1103R1	1204

Caltrans Metric

Bashkim Prishtina
REGISTERED ENGINEER - CIVIL

12-6-04
PLANS APPROVAL DATE

REGISTERED PROFESSIONAL ENGINEER
Bashkim Prishtina
No. C 053561
Exp. 6/30/11
CIVIL
STATE OF CALIFORNIA

The State of California or its officers or agents shall not be responsible for the accuracy or completeness of electronic copies of this plan sheet.

T.Y. LIN / MOFFATT & NICHOL
825 BATTERY STREET
SAN FRANCISCO, CA 94111

Caltrans now has a web site! To get to the web site, go to: http://www.dot.ca.gov

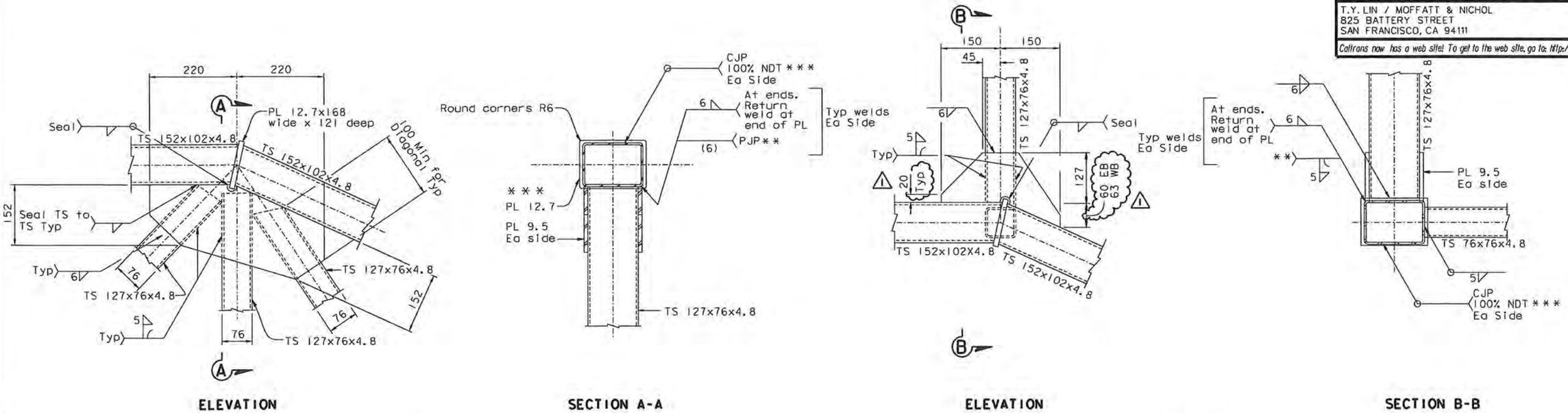

ELEVATION

SECTION A-A

ELEVATION

SECTION B-B

VCS-AF
1:5

VCS-AG
1:5

* * Denotes gap or preparation as required to achieve effective throat

* * * Denotes Verify that there are no laminations in this plate

CONTRACT CHANGE ORDER NO. 24S1
SHEET 65 OF 120

REQUESTS FOR INFORMATION NOT ADDRESSED IN THIS CCO REMAIN IN FORCE

VERTICAL CONNECTION STANDARDS (VCS)

ALL DIMENSIONS ARE IN MILLIMETERS UNLESS OTHERWISE SHOWN

R. Valizadeh/V. Toan/Y.L./W.L./F.C.
DESIGN OVERSIGHT
Roger Valizadeh / Vong Toan / Y. Liu
SIGN OFF DATE 06/19/09

MARK	DATE	DESCRIPTIONS	BY	CH'D	CCO#
1	06/19/09	TRAVELER MODIFICATIONS	BP	AS	24S1

REVISIONS

	BY	CHECKED
DESIGN	J. Otter	B. Prishtina
DETAILS	J. Otter	M. Roberts
QUANTITIES	J. Otter	M. Roberts

PREPARED FOR THE STATE OF CALIFORNIA DEPARTMENT OF TRANSPORTATION

R. Manzanarez
PROJECT ENGINEER

BRIDGE NO. 34-0006L/R
KILOMETER POST 13.2/13.9

SAN FRANCISCO OAKLAND BAY BRIDGE
EAST SPAN SEISMIC SAFETY PROJECT
SELF-ANCHORED SUSPENSION BRIDGE
(SUPERSTRUCTURE & TOWER)

TRAVELER CONNECTION DETAILS NO. 12

Rev. Date: 5-18-98

ORIGINAL SCALE IN MILLIMETERS FOR REDUCED PLANS 0 10 20 30 40 50 60 70 80 90 100

CU 04
EA 0120F1

DISREGARD PRINTS BEARING EARLIER REVISION DATES

REVISION DATES (PRELIMINARY STAGE ONLY) 04/19/02 07/01/02 12/19/02

SHEET 686R1 OF

FILE => I:\bb\04-012001\sas\contract plans and cco\cco\cco*24s1\2-revision 06-19-09\dgn\aktrv095a.dgn

USERNAME => dwinrow DATE PLOTTED => 17 JUN 2009 TIME PLOTTED => 10:32:20

100 % PS&E

DIST.	COUNTY	ROUTE	KILOMETER POST TOTAL PROJECT	SHEET NO.	TOTAL SHEETS
04	SF	80	13.2/13.9	1104R2	1204

Caltrans Metric

REGISTERED ENGINEER - CIVIL

12-6-04
PLANS APPROVAL DATE

REGISTERED PROFESSIONAL ENGINEER Bashkim Prishtina No. C 053561 Exp. 6/30/11 CIVIL STATE OF CALIFORNIA

The State of California or its officers or agents shall not be responsible for the accuracy or completeness of electronic copies of this plan sheet.

T.Y. LIN / MOFFATT & NICHOL
825 BATTERY STREET
SAN FRANCISCO, CA 94111

Caltrans now has a web site! To get to the web site, go to: http://www.dot.ca.gov

NOTES:

1. For connection Type VCS & TCS, see "Traveler Connection Details" sheets.
2. For Section E-E, see "Traveler Suspension Connection Details No.6" sheet.
3. For Section H-H, see "Traveler Suspension Connection Details No.4" sheet.
4. For secondary support, see "Traveler Suspension Connection Details No.2" sheet.
5. Angle shall be clipped at gusset plate and secondary support. At these locations an additional 500 mm long angle shall be provided on the opposite side of the TS 152x76 to support the plywood.
6. Curtail 8 mm plate at bottom of PL 9.5x127x425 and CJP weld horizontally to join the two plates.
7. At the Contractor's option, a 6 mm flush ground PJP weld for connecting PL 8 to TS 152x76 may be used.

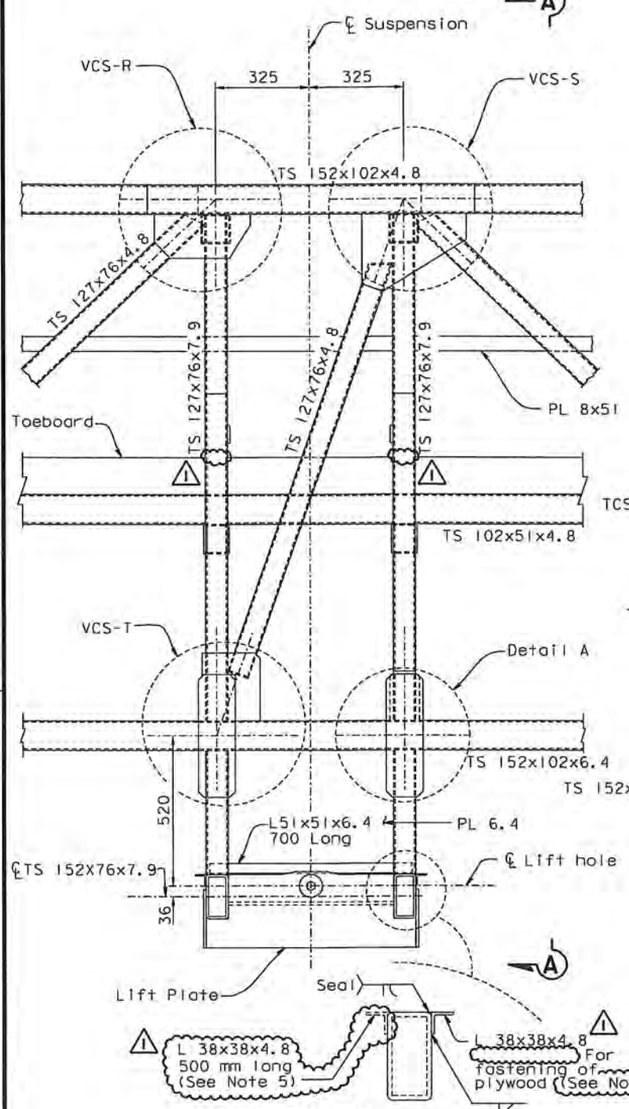

ELEVATION
View from Exterior

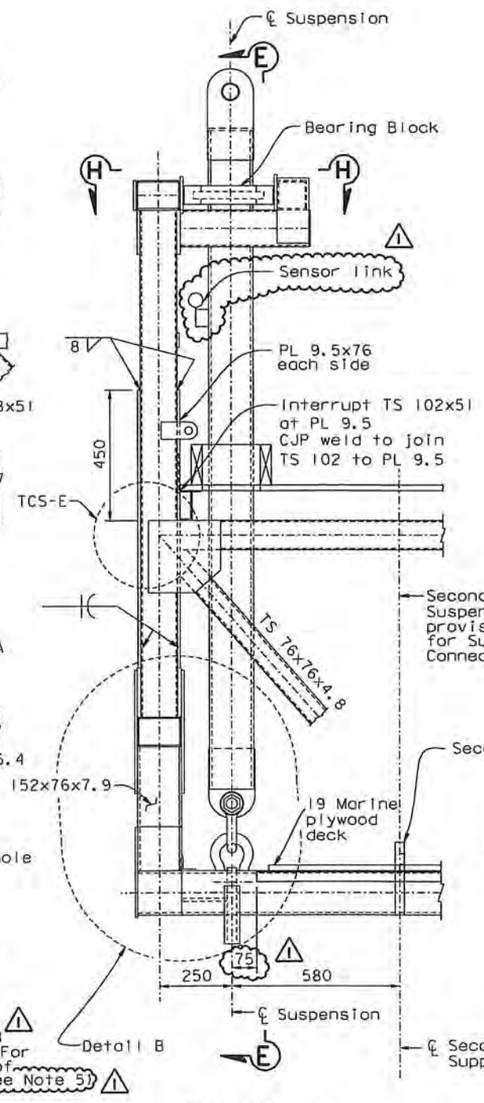

SECTION A-A

SUSPENSION CONNECTION A
1:10

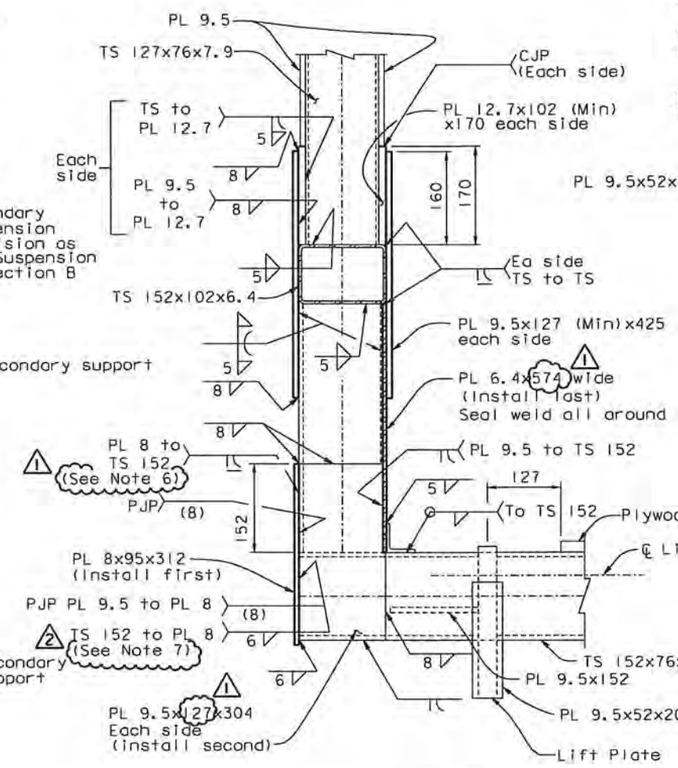

DETAIL B
1:5

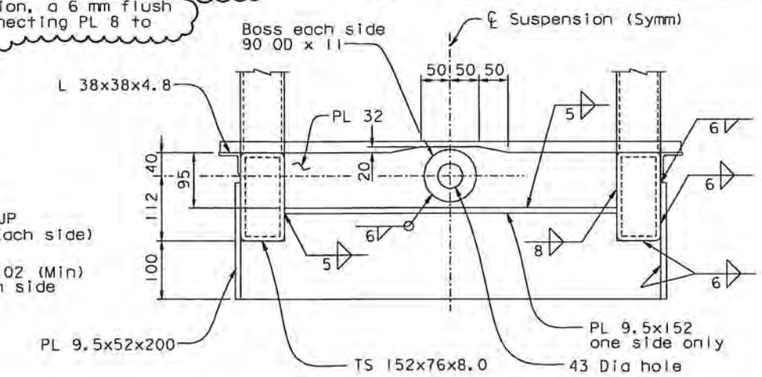

LIFT PLATE
1:5
SAS Travelers

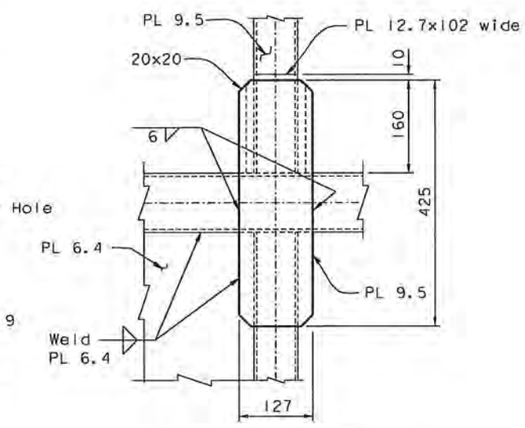

See Detail B for welding

DETAIL A
1:5

CONTRACT CHANGE ORDER NO. 24S1
SHEET 66 OF 120

REQUESTS FOR INFORMATION NOT ADDRESSED IN THIS CCO REMAIN IN FORCE

ALL DIMENSIONS ARE IN MILLIMETERS UNLESS OTHERWISE SHOWN

MARK	DATE	DESCRIPTIONS	BY	CH'D	CCO#
2	02/12/10	TRAVELER MODIFICATIONS	BP	AS	24S1
1	06/19/09	TRAVELER MODIFICATIONS	BP	AS	24S1

REVISIONS

R. Vallzadeh/V. Toan/Y.L./W.L./F.C.
DESIGN OVERSIGHT
Ron Vallzadeh / Vong Toan / Y. Liu
SIGN OFF DATE 02/12/10

Rev. Date: 5-18-98

DESIGN	BY J. Otter	CHECKED B. Prishtina	
DETAILS	BY J. Otter	CHECKED M. Roberts	
QUANTITIES	BY J. Otter	CHECKED M. Roberts	

PREPARED FOR THE STATE OF CALIFORNIA DEPARTMENT OF TRANSPORTATION

R. Manzanarez
PROJECT ENGINEER

CU 04
EA 0120F1

BRIDGE NO. 34-0006L/R
KILOMETER POST 13.2/13.9

SAN FRANCISCO OAKLAND BAY BRIDGE
EAST SPAN SEISMIC SAFETY PROJECT
SELF-ANCHORED SUSPENSION BRIDGE
(SUPERSTRUCTURE & TOWER)

TRAVELER SUSPENSION CONNECTION DETAILS NO. 1

DISREGARD PRINTS BEARING EARLIER REVISION DATES → 04/29/02 01/29/02 12/13/02

SHEET 687R2 OF

ORIGINAL SCALE IN MILLIMETERS FOR REDUCED PLANS 0 10 20 30 40 50 60 70 80 90 100

FILE => I:\bb\04-01200I\sas\contract plans and cco\cco\cco#24s1\5-revision 02-12-10\dgn\aktrv096.dgn

100 % PS&E

USERNAME => arivera DATE PLOTTED => 19 FEB 2010 TIME PLOTTED => 09:06:23

DIST.	COUNTY	ROUTE	KILOMETER POST TOTAL PROJECT	SHEET NO.	TOTAL SHEETS
04	SF	80	13.2/13.9	1105R3	1204

Bashkim Prishtina
REGISTERED ENGINEER - CIVIL
12-6-04
PLANS APPROVAL DATE
REGISTERED PROFESSIONAL ENGINEER Bashkim Prishtina No. C 053561 Exp. 6/30/11 CIVIL STATE OF CALIFORNIA

The State of California or its officers or agents shall not be responsible for the accuracy or completeness of electronic copies of this plan sheet.

T.Y. LIN / MOFFATT & NICHOL
825 BATTERY STREET
SAN FRANCISCO, CA 94111

Caltrans now has a web site! To get to the web site, go to: http://www.dot.ca.gov

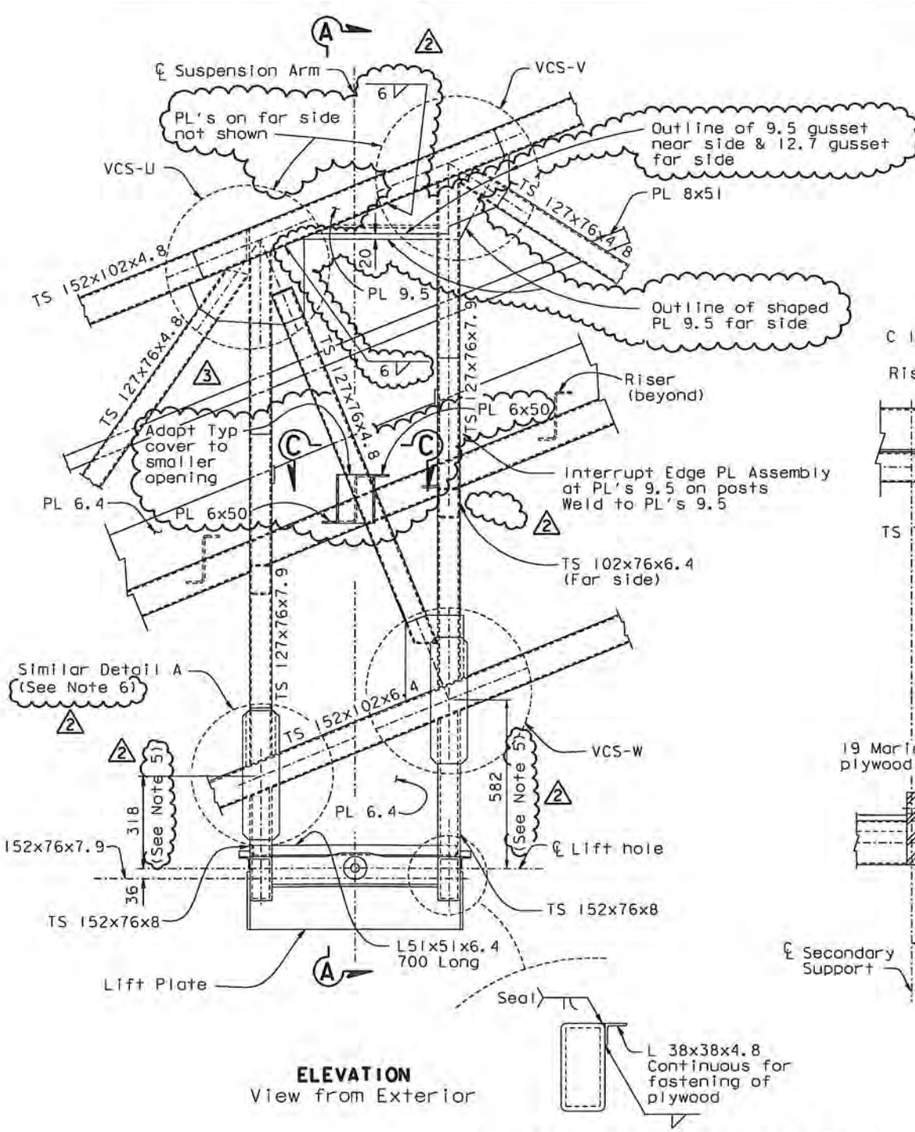

ELEVATION
View from Exterior

SUSPENSION CONNECTION B
1:10

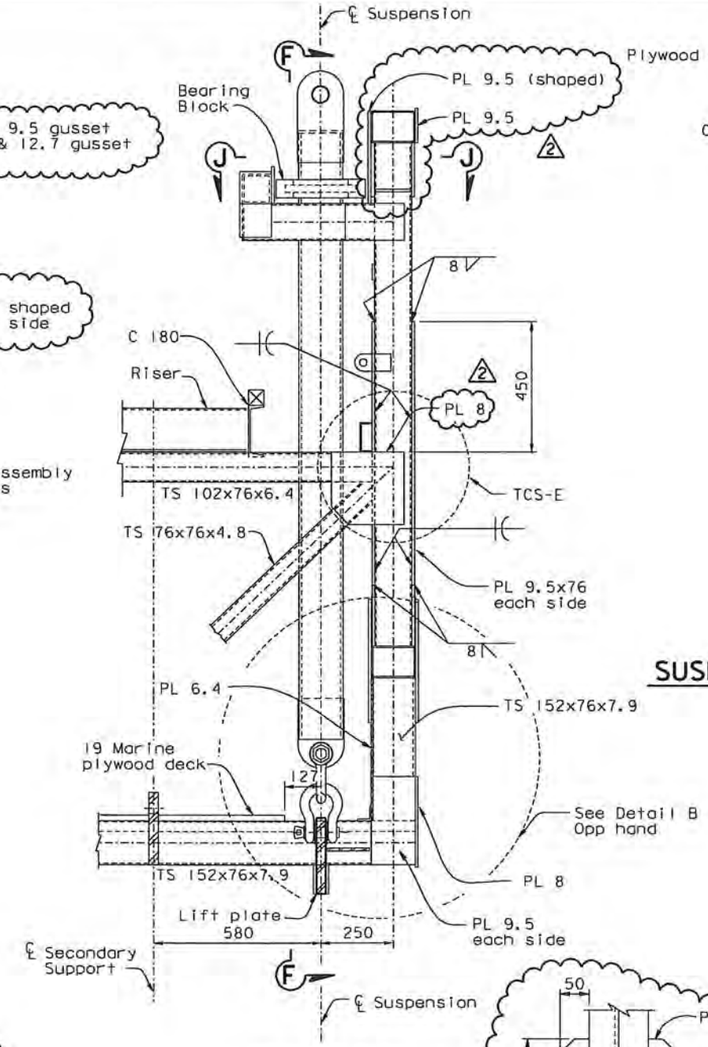

SECTION A-A

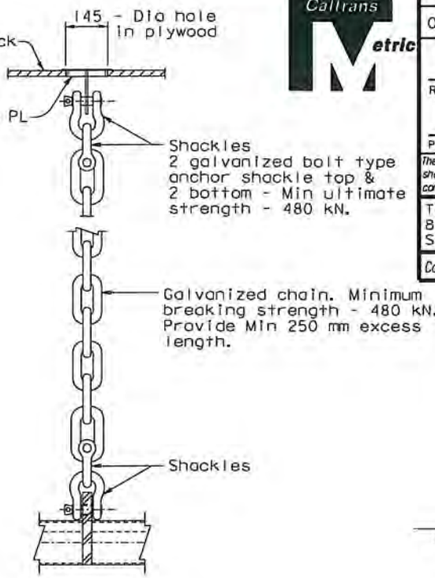

SECONDARY SUSPENSION PROVISIONS
1:10

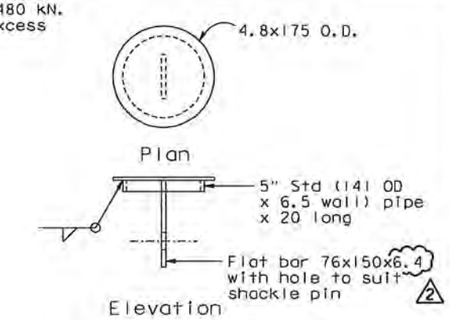

CAP PLATE DETAIL
1:5

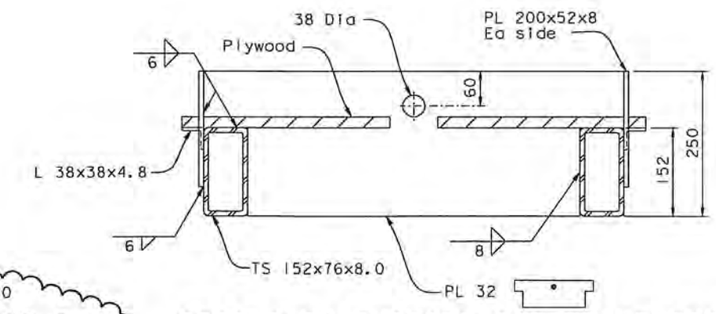

SECONDARY SUPPORT-SAS TRAVELERS
1:5

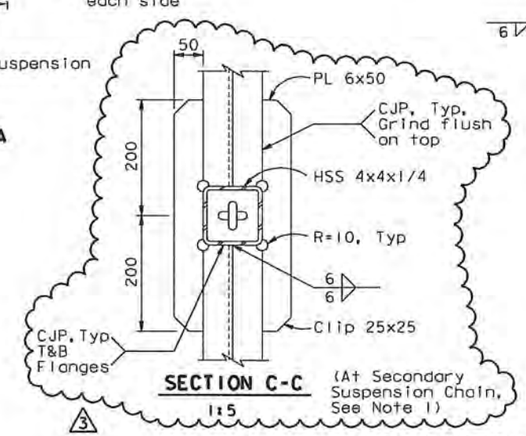

SECTION C-C
1:5
(At Secondary Suspension Chain, See Note 1)

NOTES:

1. For connection Type VCS & TCS, see "Traveler Connection Details" sheets.
2. For Section F-F, see "Traveler Suspension Connection Details No.6" sheet.
3. For Section J-J, see "Traveler Suspension Connection Details No.4" sheet.
4. For Details A and B and for Lift Plate, see "Traveler Suspension Connection Details No.1" sheet.
5. Dimensions may vary: hold the vertical location of the lift hole.
6. Curtail 8 mm plate at bottom of PL 9.5x127x425 and CJP weld horizontally to join the two plates.

2 REVISION 2 SUPERSEDES REVISION 1

CONTRACT CHANGE ORDER NO. 2451
SHEET 67 OF 120

REQUESTS FOR INFORMATION NOT ADDRESSED IN THIS CCO REMAIN IN FORCE

MARK	DATE	DESCRIPTIONS	BY	CH'D	CCO#
3	02/12/10	TRAVELER MODIFICATIONS	BP	NV	2451
2	06/19/09	TRAVELER MODIFICATIONS	BP	NV	2451
1	07/20/07	RAIL CHANGE & MISCELLANEOUS DETAILS	BP	NV	24

REVISIONS

ALL DIMENSIONS ARE IN MILLIMETERS UNLESS OTHERWISE SHOWN

R. Vaizadeh/V. Toan/Y.L./W.L./F.C.
DESIGN OVERSIGHT
Roya Vaizadeh / Vong P. Toan / Y. Liu
SIGN OFF DATE 02/12/10

	BY	CHECKED
DESIGN	J. Otter	B. Prishtina
DETAILS	J. Otter	M. Roberts
QUANTITIES	J. Otter	M. Roberts

PREPARED FOR THE STATE OF CALIFORNIA DEPARTMENT OF TRANSPORTATION

R. Manzanarez
PROJECT ENGINEER

CU 04
EA 0120F1

BRIDGE NO. 34-0006L/R
KILOMETER POST 13.2/13.9

SAN FRANCISCO OAKLAND BAY BRIDGE
EAST SPAN SEISMIC SAFETY PROJECT
SELF-ANCHORED SUSPENSION BRIDGE
(SUPERSTRUCTURE & TOWER)

TRAVELER SUSPENSION CONNECTION DETAILS NO. 2

DISREGARD PRINTS BEARING EARLIER REVISION DATES 01/25/02 07/26/02 12/19/02
REVISION DATES (PRELIMINARY STAGE ONLY)
SHEET 688R3 OF

Rev. Date: 5-18-98
ORIGINAL SCALE IN MILLIMETERS FOR REDUCED PLANS 0 10 20 30 40 50 60 70 80 90 100

FILE => I:\bb\04-0120F1\sas\contract plans and cco\cco\cco#2451\5-revision 02-12-10\dgn\oktrv097.dgn

100 % PS&E
DATE PLOTTED => 19 FEB 2010
TIME PLOTTED => 09:07:23
USERNAME => orivera

DIST.	COUNTY	ROUTE	KILOMETER POST TOTAL PROJECT	SHEET NO.	TOTAL SHEETS
04	SF	80	13.2/13.9	1106R1	1204

Caltrans Metric

Bashkim Prishtina
REGISTERED ENGINEER - CIVIL

12-6-04
PLANS APPROVAL DATE

REGISTERED PROFESSIONAL ENGINEER Bashkim Prishtina No. C 053561 Exp. 6/30/11 CIVIL STATE OF CALIFORNIA

The State of California or its officers or agents shall not be responsible for the accuracy or completeness of electronic copies of this plan sheet.

T.Y. LIN / MOFFATT & NICHOL
825 BATTERY STREET
SAN FRANCISCO, CA 94111

Caltrans now has a web site! To get to the web site, go to: http://www.dot.ca.gov

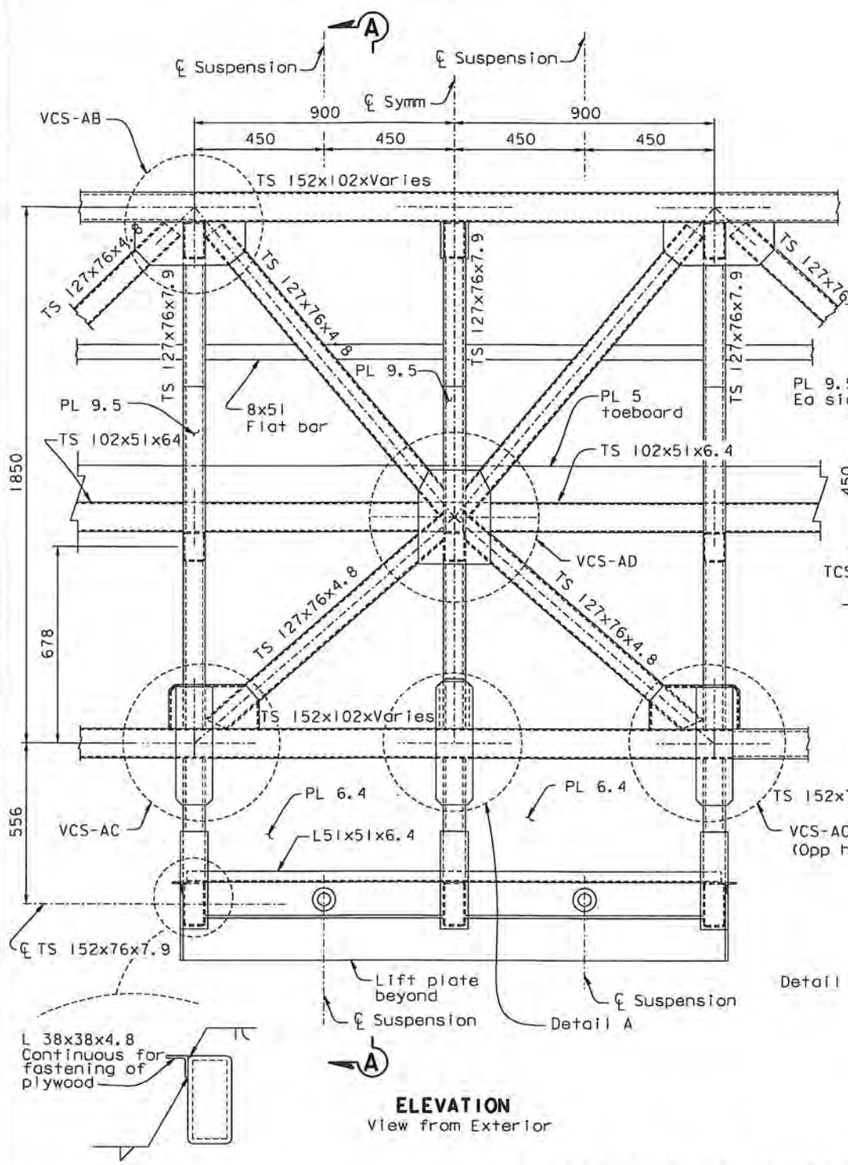

ELEVATION
View from Exterior

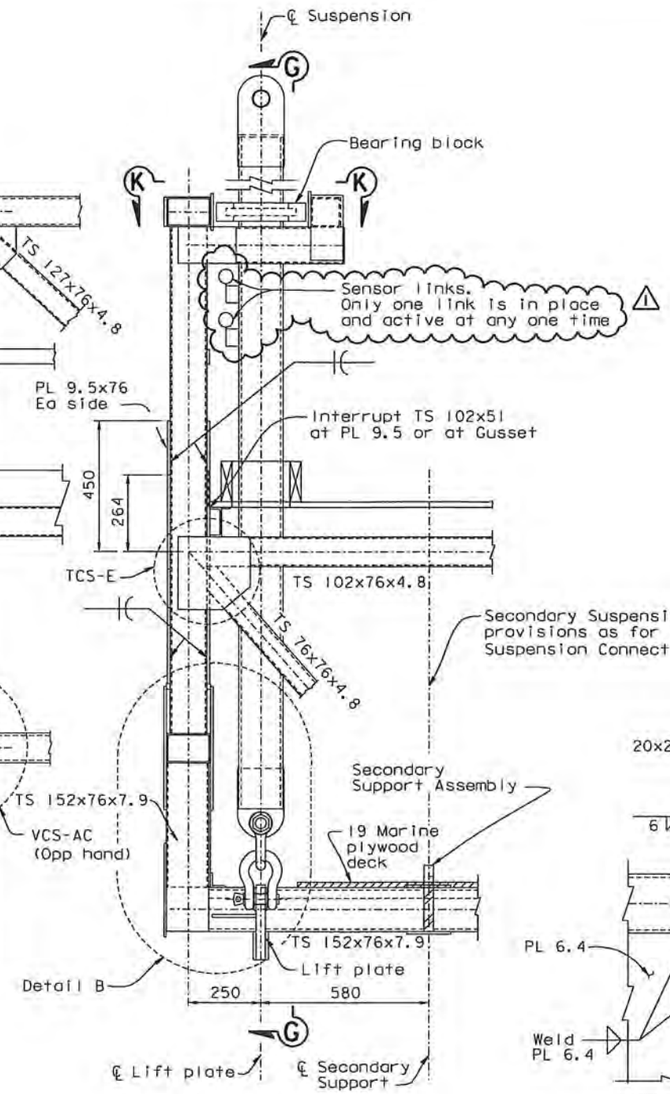

SECTION A-A

SUSPENSION CONNECTION C
1:10

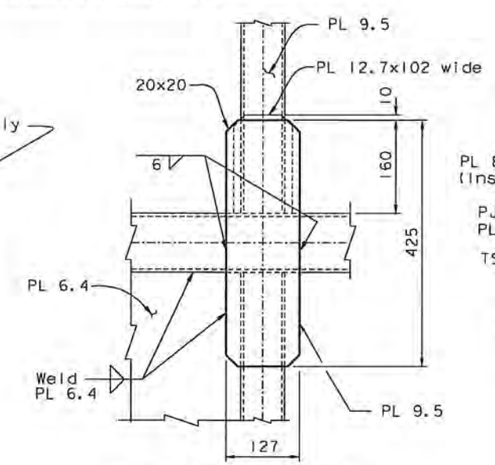

See Detail B for welding

DETAIL A
1:5

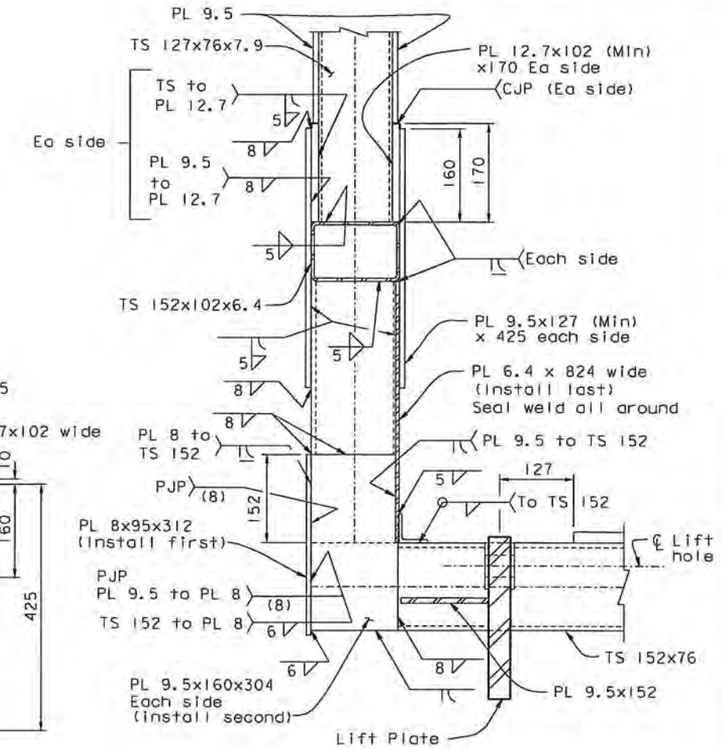

DETAIL B
1:5

NOTES:

1. For connection Type VCS & TCS, see "Traveler Connection Details" sheets.
2. For Section G-G, see "Traveler Suspension Connection Details No. 6" sheet.
3. For Section K-K, see "Traveler Suspension Connection Details No. 5" sheet.
4. For Secondary Support Assembly and Lift Plate, see "Tower Suspension Connection Details No. 5" sheet.

CONTRACT CHANGE ORDER NO. 2451
SHEET 68 OF 120

REQUESTS FOR INFORMATION NOT ADDRESSED IN THIS CCO REMAIN IN FORCE

ALL DIMENSIONS ARE IN MILLIMETERS UNLESS OTHERWISE SHOWN

100 % PS&E

MARK	DATE	REVISIONS: DESCRIPTIONS	BY	CH'D	CCO#
1	06/19/09	TRAVELER MODIFICATIONS	BP	AS	2451

R. Vaizadeh/V. Toan/Y.L./W.L./F.C.
DESIGN OVERSIGHT
Raya Vaizadeh / Vang Toan / Y. Liu
SIGN OFF DATE 06/18/09

DESIGN	BY J. Otter	CHECKED B. Prishtina	
DETAILS	BY J. Otter	CHECKED M. Roberts	
QUANTITIES	BY J. Otter	CHECKED M. Roberts	

PREPARED FOR THE STATE OF CALIFORNIA DEPARTMENT OF TRANSPORTATION

R. Manzanarez
PROJECT ENGINEER

BRIDGE NO. 34-0006L/R
KILOMETER POST 13.2/13.9

SAN FRANCISCO OAKLAND BAY BRIDGE
EAST SPAN SEISMIC SAFETY PROJECT
SELF-ANCHORED SUSPENSION BRIDGE
(SUPERSTRUCTURE & TOWER)

TRAVELER SUSPENSION CONNECTION DETAILS NO. 3

Rev. Date: 5-18-98

ORIGINAL SCALE IN MILLIMETERS FOR REDUCED PLANS 0 10 20 30 40 50 60 70 80 90 100

CU 04
EA 0120F1

DISREGARD PRINTS BEARING EARLIER REVISION DATES

REVISION DATES (PRELIMINARY STAGE ONLY) 04/09/02 07/24/02 12/13/02

SHEET 689R1 OF

FILE => I:\bb\04-0120F1\sas\contract plans and cco\cco\cco#2451\2-revision 06-19-09\dgn\aktrv098.dgn

USERNAME => dwinrow DATE PLOTTED => 17 JUN 2009 TIME PLOTTED => 10:35:11

DIST.	COUNTY	ROUTE	KILOMETER POST TOTAL PROJECT	SHEET NO.	TOTAL SHEETS
04	SF	80	13.2/13.9	1107R3	1204

Caltrans Metric

REGISTERED ENGINEER - CIVIL

12-6-04
PLANS APPROVAL DATE

REGISTERED PROFESSIONAL ENGINEER Bashkim Prishtina No. C 053561 Exp. 6/30/11 CIVIL STATE OF CALIFORNIA

The State of California or its officers or agents shall not be responsible for the accuracy or completeness of electronic copies of this plan sheet.

T.Y. LIN / MOFFATT & NICHOL
825 BATTERY STREET
SAN FRANCISCO, CA 94111

Caltrans now has a web site! To get to the web site, go to: http://www.dot.ca.gov

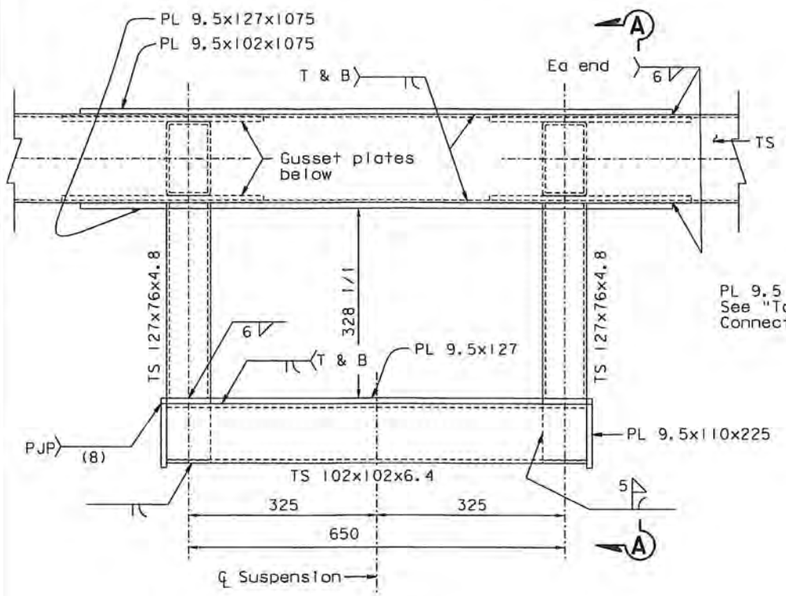

SECTION H-H

SUSPENSION ARM ENTRAPMENT

1:5

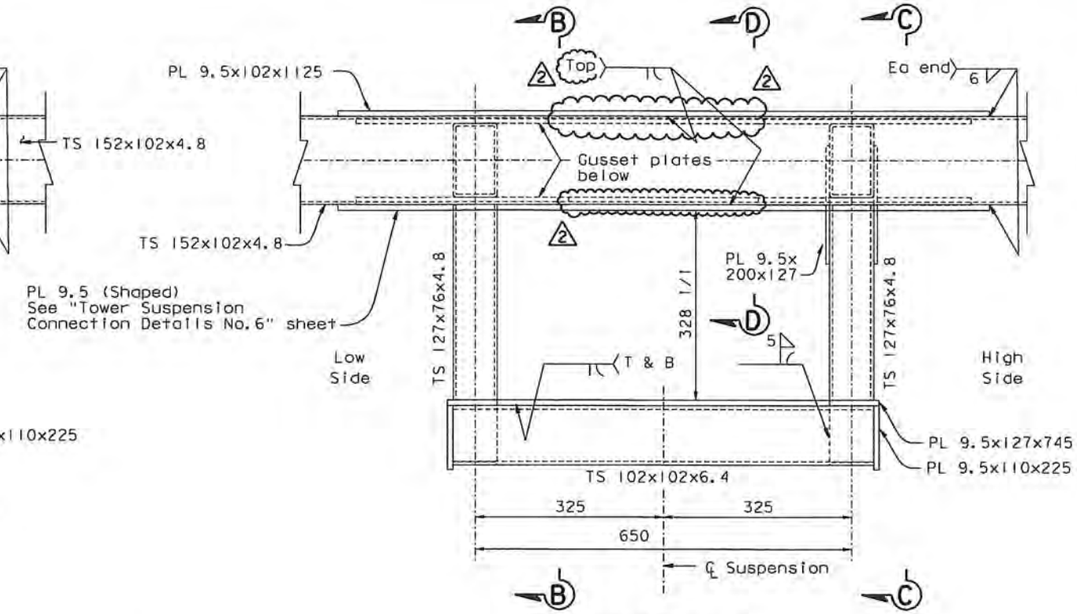

SECTION J-J

SUSPENSION ARM ENTRAPMENT

1:5

NOTES:

3 1. At the contrator's option, a 6mm fillet weld may be used in lieu of a CJP weld for connecting the TS 127x76 to PL 12.7.

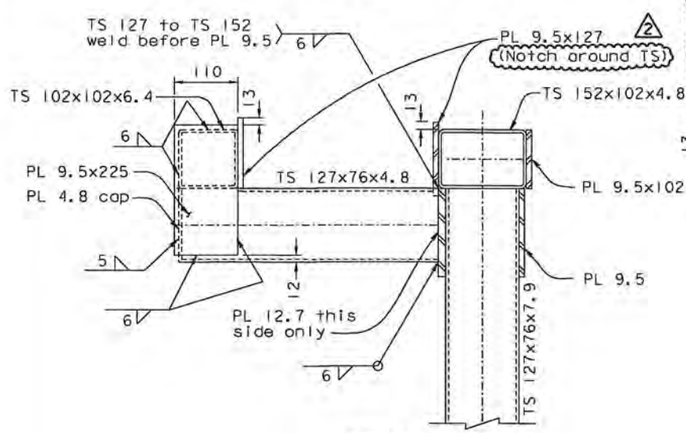

SECTION A-A

1:5

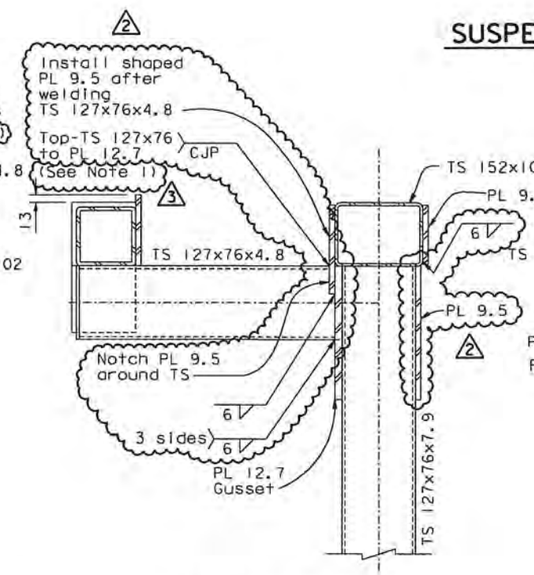

SECTION B-B

1:5

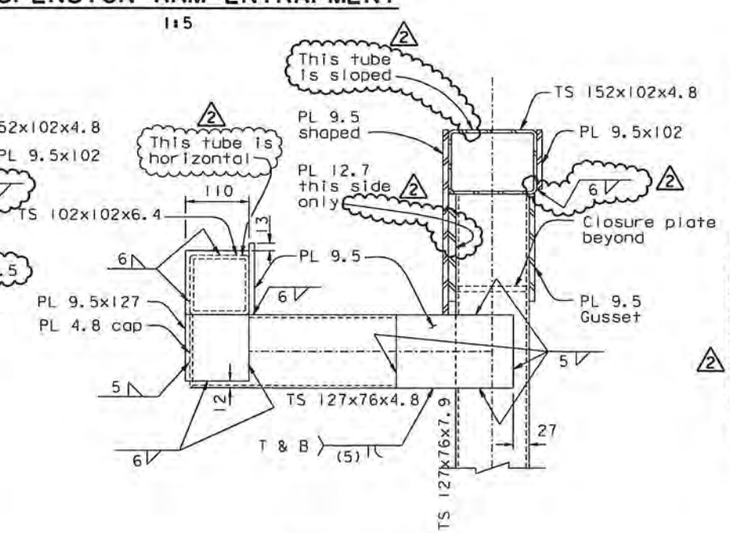

SECTION C-C

1:5

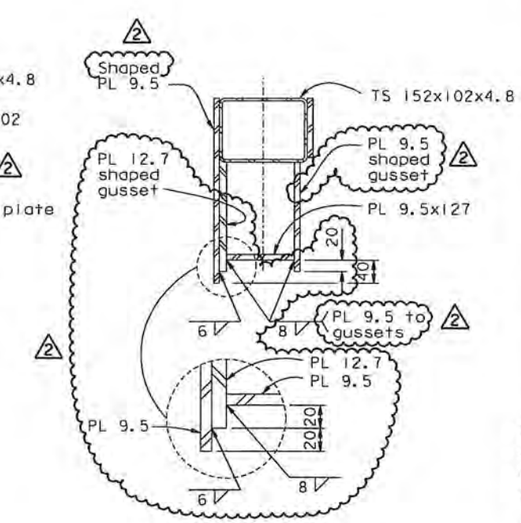

SECTION D-D

1:5

2 REVISION 2 SUPERSEDES REVISION 1

CONTRACT CHANGE ORDER NO. 24S1
SHEET 69 OF 120

REQUESTS FOR INFORMATION NOT ADDRESSED IN THIS CCO REMAIN IN FORCE

MARK	DATE	DESCRIPTIONS	BY	CH'D	CCO#
3	02/12/10	TRAVELER MODIFICATIONS	BP	NV	24S1
2	06/19/09	TRAVELER MODIFICATIONS	BP	NV	24S1
1	07/20/07	RAIL CHANGE & MISCELLANEOUS DETAILS	BP	NV	24

REVISIONS

SUSPENSION ENTRAPMENT A & B

ALL DIMENSIONS ARE IN MILLIMETERS UNLESS OTHERWISE SHOWN

	BY	CHECKED
DESIGN	J. Otter	B. Prishtina
DETAILS	J. Otter	M. Roberts
QUANTITIES	J. Otter	M. Roberts

PREPARED FOR THE STATE OF CALIFORNIA DEPARTMENT OF TRANSPORTATION

R. Manzanarez
PROJECT ENGINEER

BRIDGE NO. 34-0006L/R
KILOMETER POST 13.2/13.9

SAN FRANCISCO OAKLAND BAY BRIDGE
EAST SPAN SEISMIC SAFETY PROJECT
SELF-ANCHORED SUSPENSION BRIDGE
(SUPERSTRUCTURE & TOWER)

TRAVELER SUSPENSION CONNECTION DETAILS NO. 4

R. Vallizadeh/V. Toan/Y.L./W.L./F.C.
DESIGN OVERSIGHT
SIGN OFF DATE 02/12/10

Rev. Date: 5-18-98

ORIGINAL SCALE IN MILLIMETERS FOR REDUCED PLANS 0 10 20 30 40 50 60 70 80 90 100

CU 04
EA 0120F1

DISREGARD PRINTS BEARING EARLIER REVISION DATES

REVISION DATES (PRELIMINARY STAGE ONLY) 04/24/02 01/29/02 12/15/02

SHEET 690R3 OF

FILE => I:\bb\04-0120F1\sas\contract plans and cco\cco\cco#24s1\5-revision 02-12-10\dgn\aktrv099.dgn

100 % PS&E

USERNAME => arivera DATE PLOTTED => 19 FEB 2010 TIME PLOTTED => 09:08:23

DIST.	COUNTY	ROUTE	KILOMETER POST TOTAL PROJECT	SHEET NO.	TOTAL SHEETS
04	SF	80	13.2/13.9	1109R2	1204

Caltrans Metric

Bashkim Prishtina
REGISTERED ENGINEER - CIVIL

12-6-04
PLANS APPROVAL DATE

REGISTERED PROFESSIONAL ENGINEER Bashkim Prishtina No. C 053561 Exp. 6/30/11 CIVIL STATE OF CALIFORNIA

The State of California or its officers or agents shall not be responsible for the accuracy or completeness of electronic copies of this plan sheet.

T.Y. LIN / MOFFATT & NICHOL
825 BATTERY STREET
SAN FRANCISCO, CA 94111

Caltrans now has a web site! To get to the web site, go to: http://www.dot.ca.gov

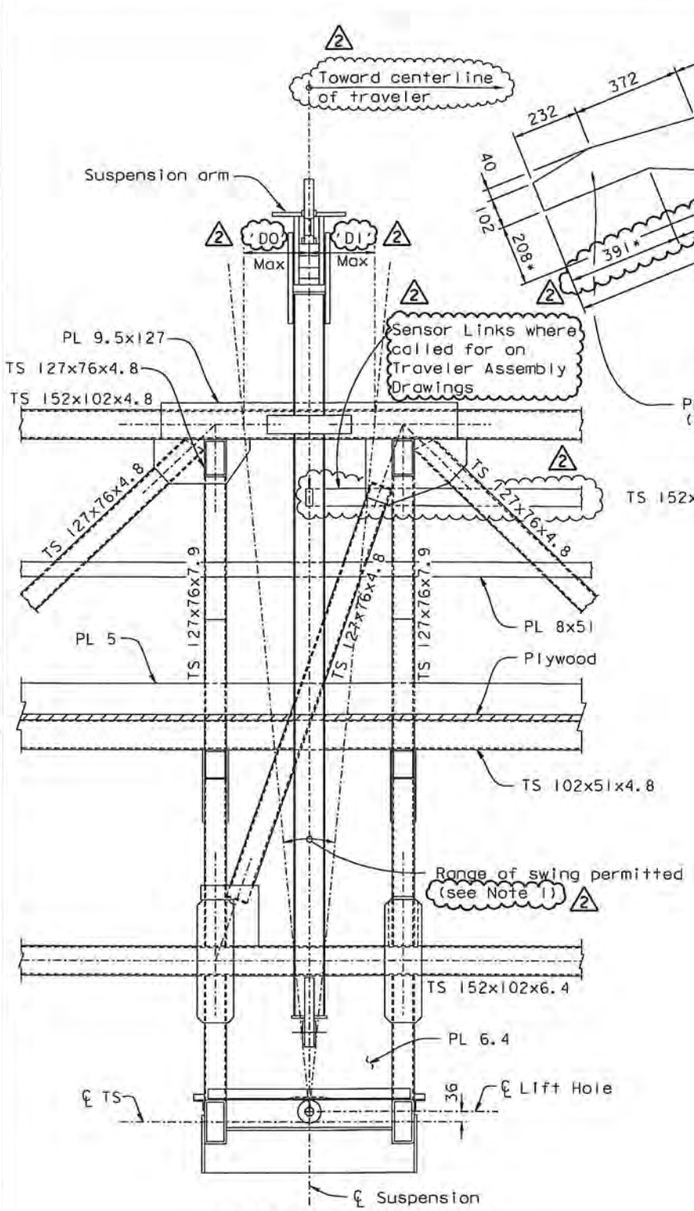

SECTION E-E
1:10
FOR SUSPENSION CONNECTION A

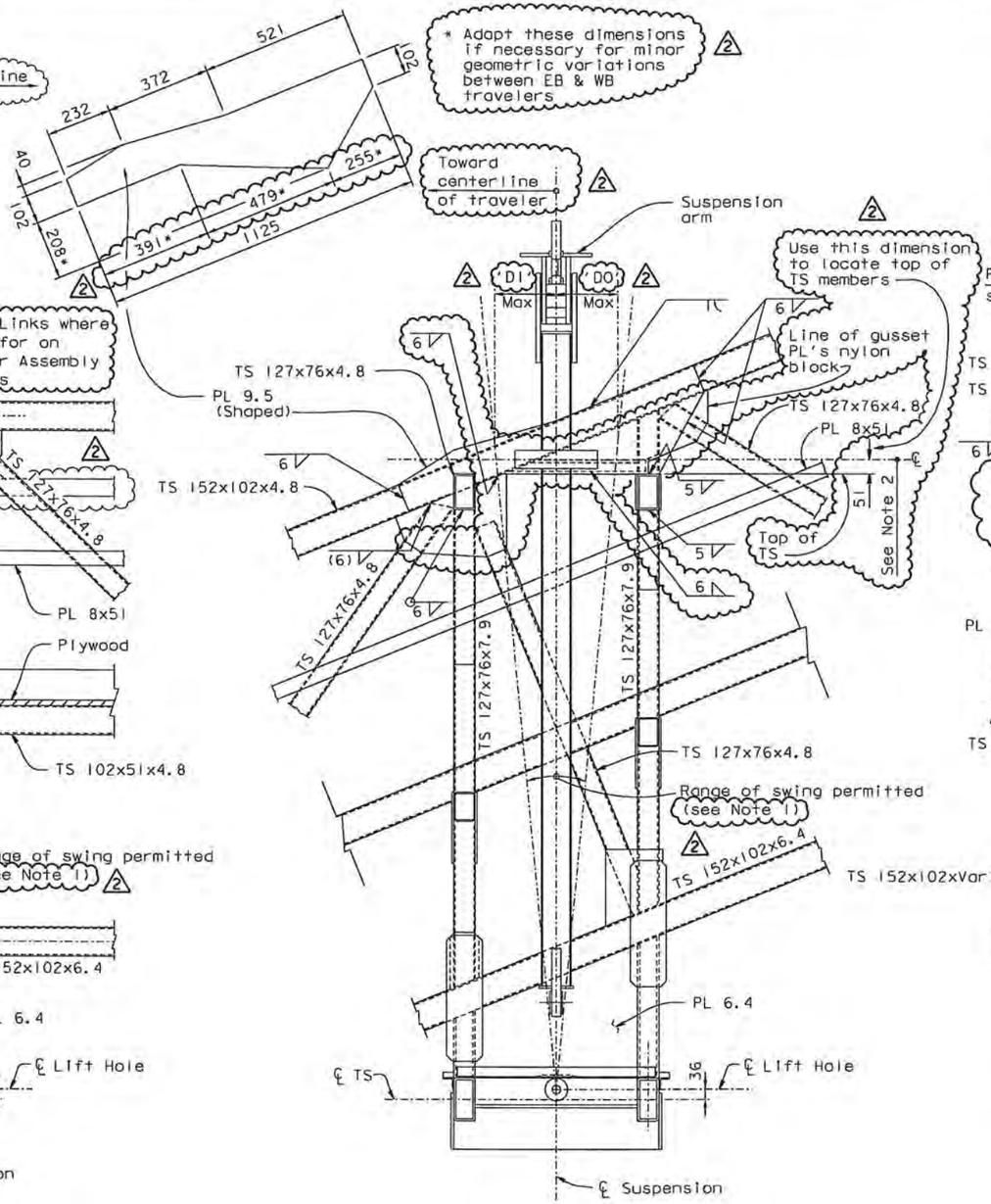

SECTION F-F
1:10
FOR SUSPENSION CONNECTION B

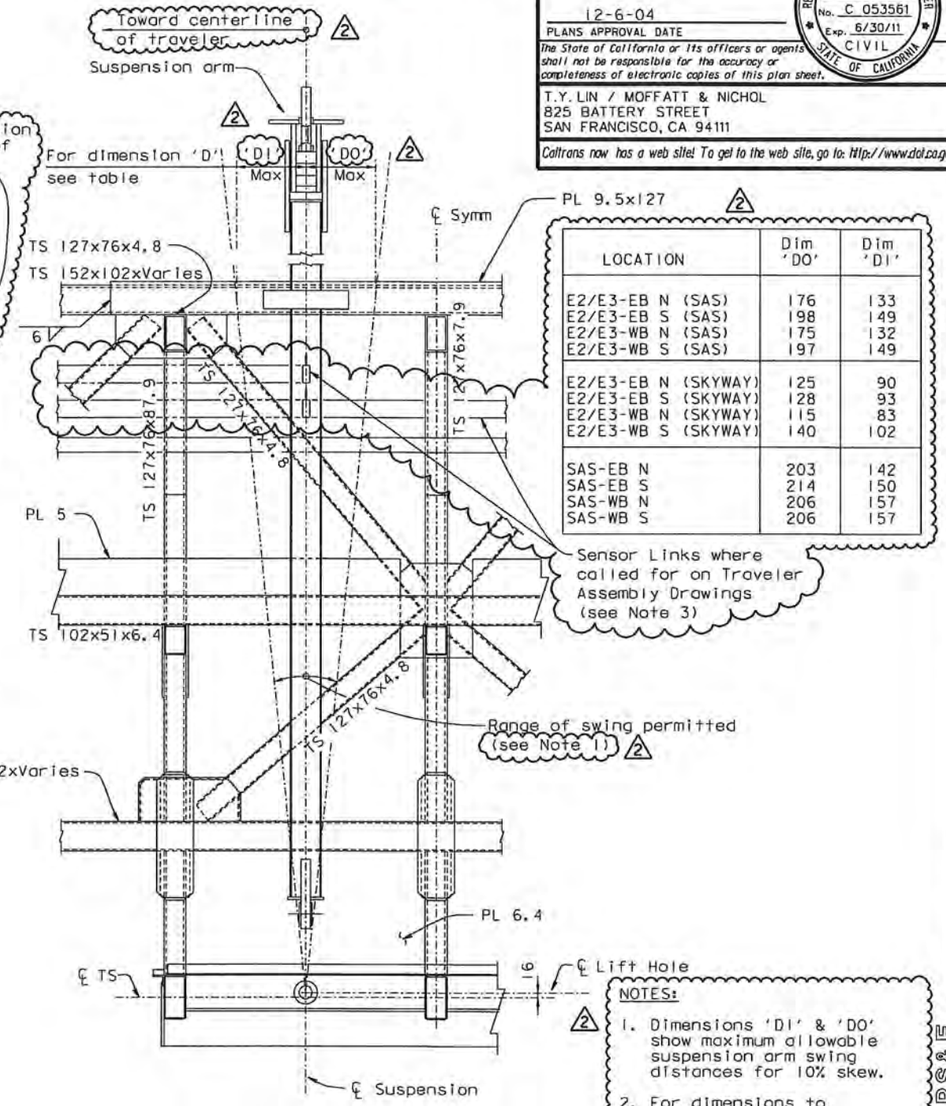

SECTION G-G
1:10
FOR SUSPENSION CONNECTION C

LOCATION	Dim 'DO'	Dim 'DI'
E2/E3-EB N (SAS)	176	133
E2/E3-EB S (SAS)	198	149
E2/E3-WB N (SAS)	175	132
E2/E3-WB S (SAS)	197	149
E2/E3-EB N (SKYWAY)	125	90
E2/E3-EB S (SKYWAY)	128	93
E2/E3-WB N (SKYWAY)	115	83
E2/E3-WB S (SKYWAY)	140	102
SAS-EB N	203	142
SAS-EB S	214	150
SAS-WB N	206	157
SAS-WB S	206	157

NOTES:

1. Dimensions 'DI' & 'DO' show maximum allowable suspension arm swing distances for 10% skew.
2. For dimensions to CL lift hole see "Traveler Suspension Details No. 8" sheet.
3. Disconnect and remove the link to the suspension arm which is not currently in use (SAS or Skyway).

REVISION
SUPERSEDES
REVISION

CONTRACT CHANGE ORDER NO. 2451
SHEET 70 OF 120

REQUESTS FOR INFORMATION NOT ADDRESSED IN THIS CCO REMAIN IN FORCE

ALL DIMENSIONS ARE IN MILLIMETERS UNLESS OTHERWISE SHOWN

MARK	DATE	DESCRIPTIONS	BY	CH'D	CCO#
2	06/19/09	TRAVELER MODIFICATIONS	BP	AS	2451
1	07/20/07	RAIL CHANGE & MISCELLANEOUS DETAILS	BP	NV	24

REVISIONS

R. Vallizadeh/V. Toan/Y.L./W.L./F.C.
DESIGN OVERSIGHT
Ron Vallizadeh / Vong P. Toan / Y. Liu
SIGN OFF DATE 06/19/09

Rev. Date: 5-18-98

DESIGN BY J. Otter CHECKED B. Prishtina
DETAILS BY J. Otter CHECKED M. Roberts
QUANTITIES BY J. Otter CHECKED M. Roberts

ORIGINAL SCALE IN MILLIMETERS FOR REDUCED PLANS 0 10 20 30 40 50 60 70 80 90 100

PREPARED FOR THE STATE OF CALIFORNIA DEPARTMENT OF TRANSPORTATION

R. Manzanarez
PROJECT ENGINEER

BRIDGE NO. 34-0006L/R
KILOMETER POST 13.2/13.9

CU 04
EA 0120F1

DISREGARD PRINTS BEARING EARLIER REVISION DATES

REVISION DATES (PRELIMINARY STAGE ONLY) 04/09/02 07/20/07 12/19/08

SHEET 692R2 OF

SAN FRANCISCO OAKLAND BAY BRIDGE
EAST SPAN SEISMIC SAFETY PROJECT
SELF-ANCHORED SUSPENSION BRIDGE
(SUPERSTRUCTURE & TOWER)

TRAVELER SUSPENSION CONNECTION DETAILS NO. 6

100 % PS&E

USERNAME => dwinrow DATE PLOTTED => 17 JUN 2009 TIME PLOTTED => 10:37:58

FILE => I:\bb\04-0120F1\sas\contract plans and cco\cco\cco*2451\2-revision 06-19-09\dgn\aktrv101.dgn

NOTES:

4. SAS trolley train shown. Skyway trolley train similar except Link BX is used in lieu of Link B.
5. The piston motor driven trolley and the passive trolley shall be as specified in the Special Provisions.
6. Required Trolley load ratings (for Piston Motor Trolley and Passive Trolley): Rated @ 3000 kg working load for "Man Rider" applications.
7. Caliper dynamic brakes and mounting plates. For details see "Traveler Suspension Details No. 9" sheet.
8. Suspension System Materials. All materials are as described on "Traveler General Notes No. 1" sheet except as noted below.
   Pins & Shafts to be Fy=300 MPa Min.
   Fabricator to propose specific materials for pins & shafts.
9. All nuts to be galvanized slotted heavy hex nuts with cotter pins unless noted otherwise.
10. All welds in all links to be 100% NDT tested.
11. Fabricator to propose materials for expanded neoprene seal rings.
12. Nuts that are not slotted nuts are to be installed with locking compound applied to the threads.

Caltrans Metric

DIST.	COUNTY	ROUTE	KILOMETER POST TOTAL PROJECT	SHEET NO.	TOTAL SHEETS
04	SF	80	13.2/13.9	1110R3	1204

Bashkim Prishtina
REGISTERED ENGINEER - CIVIL
12-06-04
PLANS APPROVAL DATE
REGISTERED PROFESSIONAL ENGINEER Bashkim Prishtina No. C 053561 Exp. 6/30/11 CIVIL STATE OF CALIFORNIA

The State of California or its officers or agents shall not be responsible for the accuracy or completeness of electronic copies of this plan sheet.

T.Y. LIN / MOFFATT & NICHOL
825 BATTERY STREET
SAN FRANCISCO, CA 94111

Caltrans now has a web site! To get to the web site, go to: http://www.dot.ca.gov

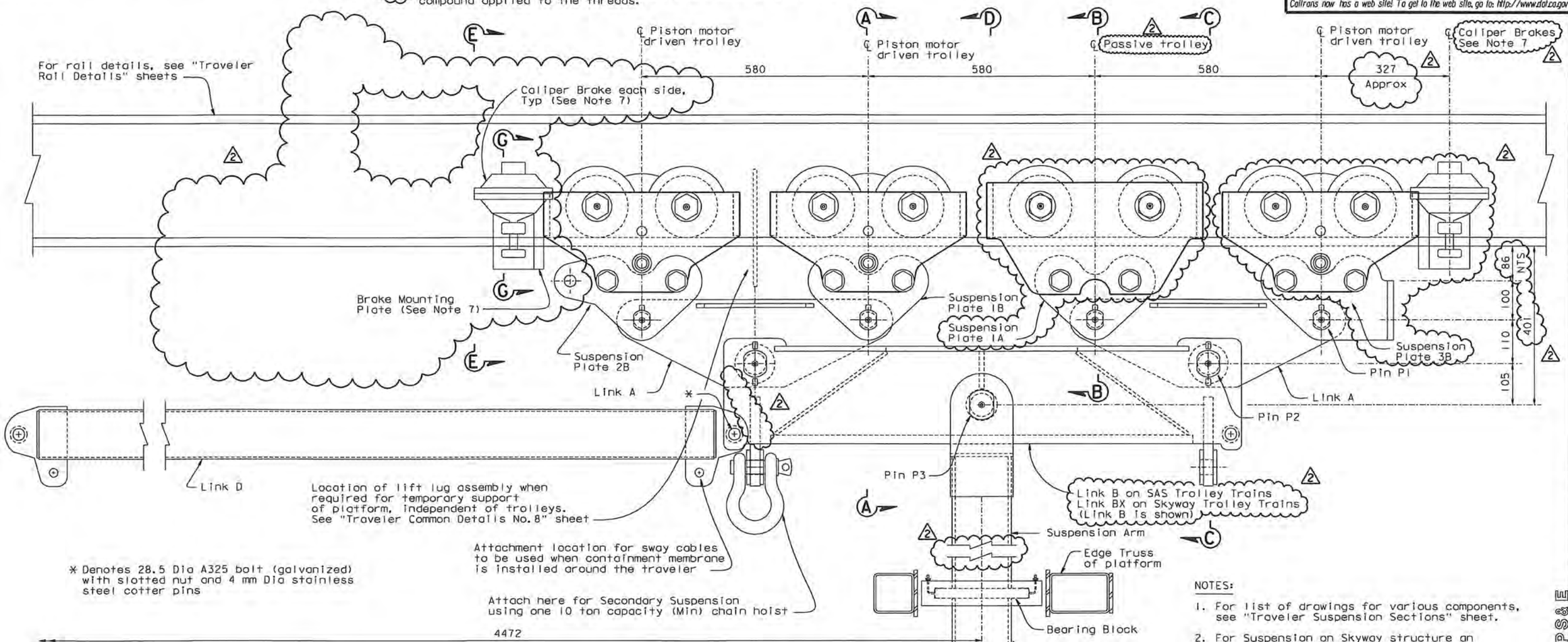

* Denotes 28.5 Dia A325 bolt (galvanized) with slotted nut and 4 mm Dia stainless steel cotter pins

NOTES:

1. For list of drawings for various components, see "Traveler Suspension Sections" sheet.
2. For Suspension on Skyway structure an additional Suspension arm is used.
3. For Sections A-A, B-B, C-C, D-D and E-E see "Traveler Suspension Sections" sheet.
4. For Section G-G see "Traveler Suspension Details No. 9" sheet.

ASSEMBLED VIEW OF TROLLEY TRAIN SUSPENSION SYSTEMS

1:5

REVISION 2 SUPERSEDES REVISION 1

CONTRACT CHANGE ORDER NO. 24S1
SHEET 71 OF 120

REQUESTS FOR INFORMATION NOT ADDRESSED IN THIS CCO REMAIN IN FORCE

MARK	DATE	DESCRIPTIONS	BY	CH'D	CCO#
3	02/12/10	TRAVELER MODIFICATIONS	BP	AS	24S1
2	08/21/09	TRAVELER MODIFICATIONS	BP	AS	24S1
1	07/20/07	RAIL CHANGE & MISCELLANEOUS DETAILS	BP	NV	24

REVISIONS

R. Valizadeh/V. Toan/Y.L./W.L./F.C.
DESIGN OVERSIGHT
Roger Valizadeh / Vong P. Toan / Y. Liu
SIGN OFF DATE 02/12/10

Rev. Date: 5-18-98

	BY	CHECKED
DESIGN	J. Otter	K. Prishtina
DETAILS	J. Otter	M. Roberts
QUANTITIES	J. Otter	M. Roberts

ORIGINAL SCALE IN MILLIMETERS FOR REDUCED PLANS 0 10 20 30 40 50 60 70 80 90 100

PREPARED FOR THE STATE OF CALIFORNIA DEPARTMENT OF TRANSPORTATION

ALL DIMENSIONS ARE IN MILLIMETERS UNLESS OTHERWISE SHOWN

R. Manzanarez
PROJECT ENGINEER

BRIDGE NO. 34-0006L/R
KILOMETER POST 13.2/13.9

CU 04
EA 0120F1

DISREGARD PRINTS BEARING EARLIER REVISION DATES

REVISION DATES (PRELIMINARY STAGE ONLY) 04/13/02 07/01/02 12/19/02

SAN FRANCISCO OAKLAND BAY BRIDGE
EAST SPAN SEISMIC SAFETY PROJECT
SELF-ANCHORED SUSPENSION BRIDGE
(SUPERSTRUCTURE & TOWER)

TRAVELER SUSPENSION GENERAL ARRANGEMENT

SHEET 693R3 OF

FILE => I:\bb\04-012001\sas\contract plans and cco\cco\cco#24s1\5-revision 02-12-10\dgn\aktrv102.dgn

100 % PS&E

USERNAME => arivera DATE PLOTTED => 19 FEB 2010 TIME PLOTTED => 09:09:24

DIST.	COUNTY	ROUTE	KILOMETER POST TOTAL PROJECT	SHEET NO.	TOTAL SHEETS
04	SF	80	13.2/13.9	1111R5	1204

Caltrans Metric

REGISTERED ENGINEER - CIVIL

12-6-04
PLANS APPROVAL DATE

REGISTERED PROFESSIONAL ENGINEER Boshkim Prishtina No. C 053561 Exp. 6/30/11 CIVIL STATE OF CALIFORNIA

The State of California or its officers or agents shall not be responsible for the accuracy or completeness of electronic copies of this plan sheet.

T.Y. LIN / MOFFATT & NICHOL
825 BATTERY STREET
SAN FRANCISCO, CA 94111

Caltrans now has a web site! To get to the web site, go to: http://www.dot.ca.gov

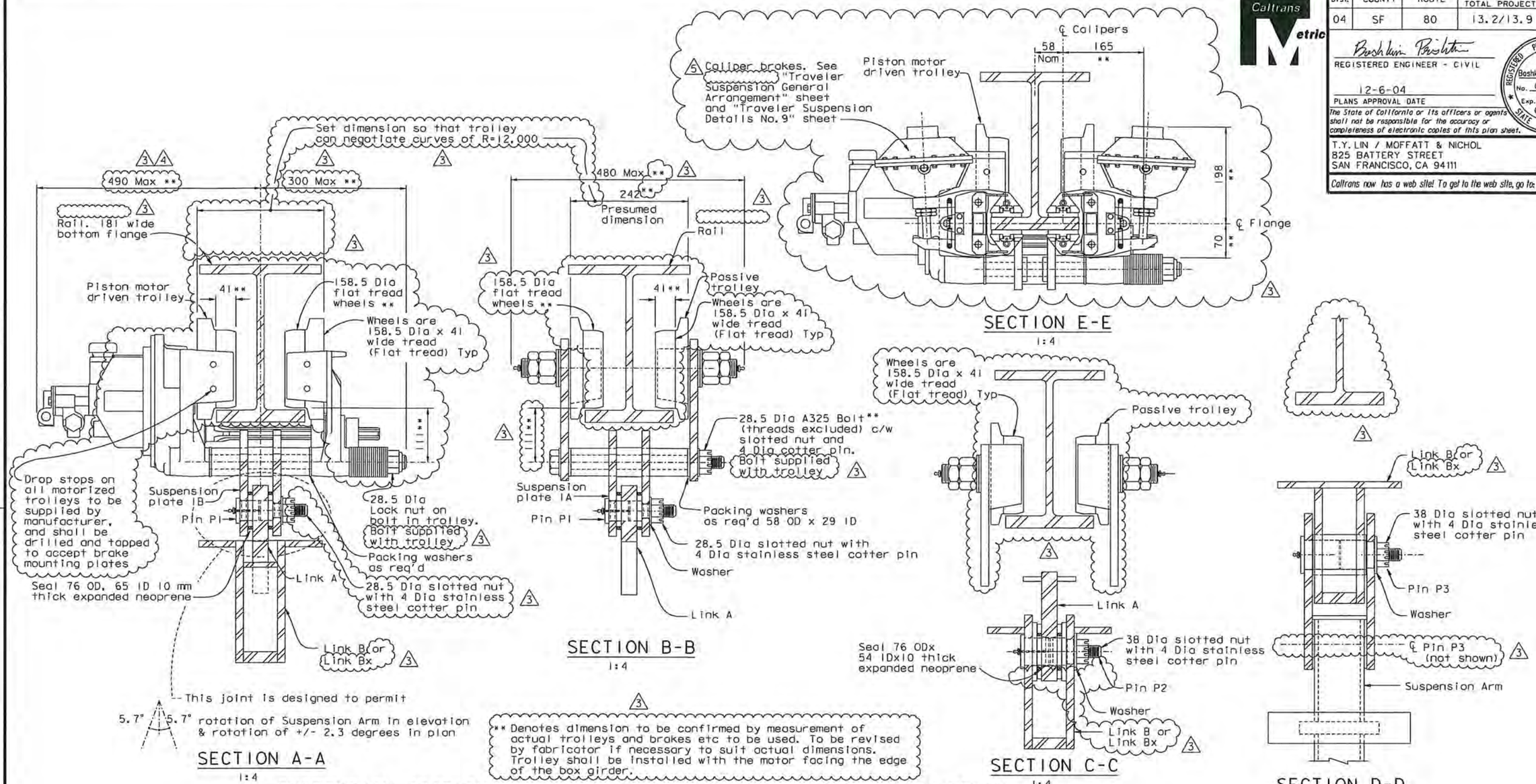

** Denotes dimension to be confirmed by measurement of actual trolleys and brakes etc to be used. To be revised by fabricator if necessary to suit actual dimensions. Trolley shall be installed with the motor facing the edge of the box girder.

SUSPENSION SECTIONS - SAS TROLLEY TRAIN & SKYWAY TROLLEY TRAIN

REVISION 3 SUPERSEDES REVISIONS 1 & 2

CONTRACT CHANGE ORDER NO. 24S1
SHEET 72 OF 120

REQUESTS FOR INFORMATION NOT ADDRESSED IN THIS CCO REMAIN IN FORCE

MARK	DATE	DESCRIPTIONS	BY	CH'D	CCO#
5	07/09/10	TRAVELER MODIFICATIONS	BP	AS	24S1
4	02/12/10	TRAVELER MODIFICATIONS	BP	AS	24S1
3	08/21/09	TRAVELER MODIFICATIONS	BP	AS	24S1
2	07/20/07	RAIL CHANGE & MISCELLANEOUS DETAILS	BP	NV	24
1	08/04/06	TRAVELER RAILS	BP	NV	24

REVISIONS

Parts List & Drawing Location

Passive Trolley	Traveler Suspension Details No. 1 sheet.
Suspension Plates	Traveler Suspension Details No. 2 sheet.
Link A	Traveler Suspension Details No. 3 sheet.
Link B & Link BX	Traveler Suspension Details No. 4 sheet.
Link D	Traveler Suspension Details No. 2 sheet.
Pins	Traveler Suspension Details No. 3 sheet.
Suspension Arm	Traveler Suspension Details No. 8 sheet.
Upper Suspension Arm	Traveler Suspension Details No. 4 sheet.
Bearing Block	Traveler Suspension Details No. 8 sheet.

ALL DIMENSIONS ARE IN MILLIMETERS UNLESS OTHERWISE SHOWN

R. Vallizadeh/V. Toan/Y.L./W.L./F.C.
DESIGN OVERSIGHT
SIGN OFF DATE 07/09/10

DESIGN	BY J. Otter	CHECKED B. Prishtina	
DETAILS	BY J. Otter	CHECKED M. Roberts	
QUANTITIES	BY J. Otter	CHECKED M. Roberts	

PREPARED FOR THE STATE OF CALIFORNIA DEPARTMENT OF TRANSPORTATION

R. Manzanarez
PROJECT ENGINEER

BRIDGE NO. 34-0006L/R
KILOMETER POST 13.2/13.9

SAN FRANCISCO OAKLAND BAY BRIDGE
EAST SPAN SEISMIC SAFETY PROJECT
SELF-ANCHORED SUSPENSION BRIDGE
(SUPERSTRUCTURE & TOWER)

TRAVELER SUSPENSION SECTIONS

Rev. Date: 5-18-98

ORIGINAL SCALE IN MILLIMETERS FOR REDUCED PLANS 0 10 20 30 40 50 60 70 80 90 100

CU 04
EA 0120F1

DISREGARD PRINTS BEARING EARLIER REVISION DATES

REVISION DATES (PRELIMINARY STAGE ONLY) 04/25/02 07/24/02 12/19/02

SHEET 694R5 OF

100 % PS&E

USERNAME => ortivera DATE PLOTTED => 12 JUL 2010 TIME PLOTTED => 14:35:06

FILE => I:\bb\04-012001\sas\contract plans and cco\cco\cco*24s1\7-revision 07-09-10\dgn\aktrv103.dgn

DIST.	COUNTY	ROUTE	KILOMETER POST TOTAL PROJECT	SHEET NO.	TOTAL SHEETS
04	SF	80	13.2/13.9	1112R3	1204

Caltrans Metric

Boshkim Prishtina
REGISTERED ENGINEER - CIVIL

12-6-04
PLANS APPROVAL DATE

REGISTERED PROFESSIONAL ENGINEER Boshkim Prishtina No. C 053561 Exp. 6/30/11 CIVIL STATE OF CALIFORNIA

The State of California or its officers or agents shall not be responsible for the accuracy or completeness of electronic copies of this plan sheet.

T.Y. LIN / MOFFATT & NICHOL
825 BATTERY STREET
SAN FRANCISCO, CA 94111

Caltrans now has a web site! To get to the web site, go to: http://www.dot.ca.gov

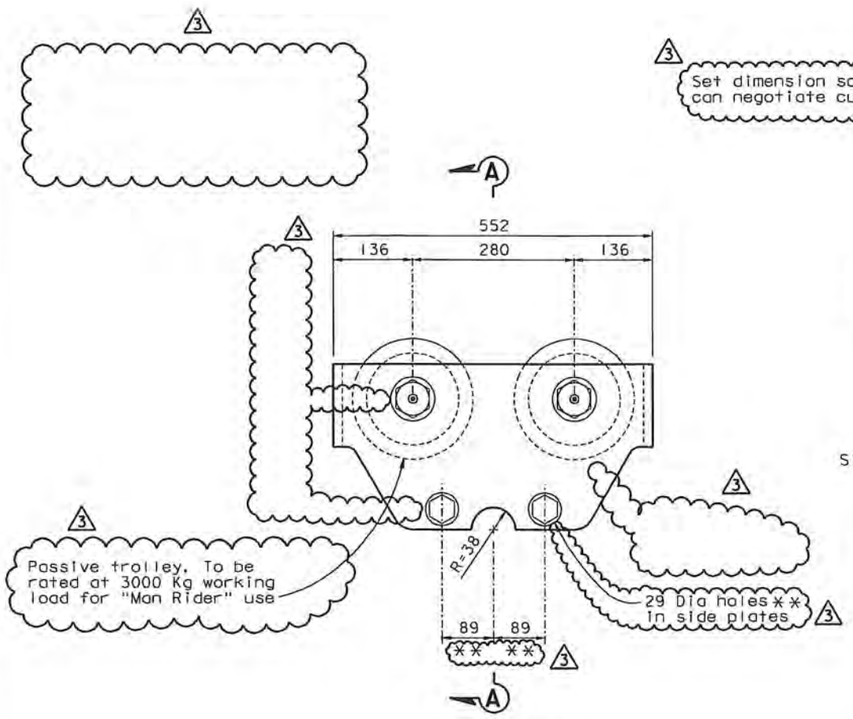

ELEVATION

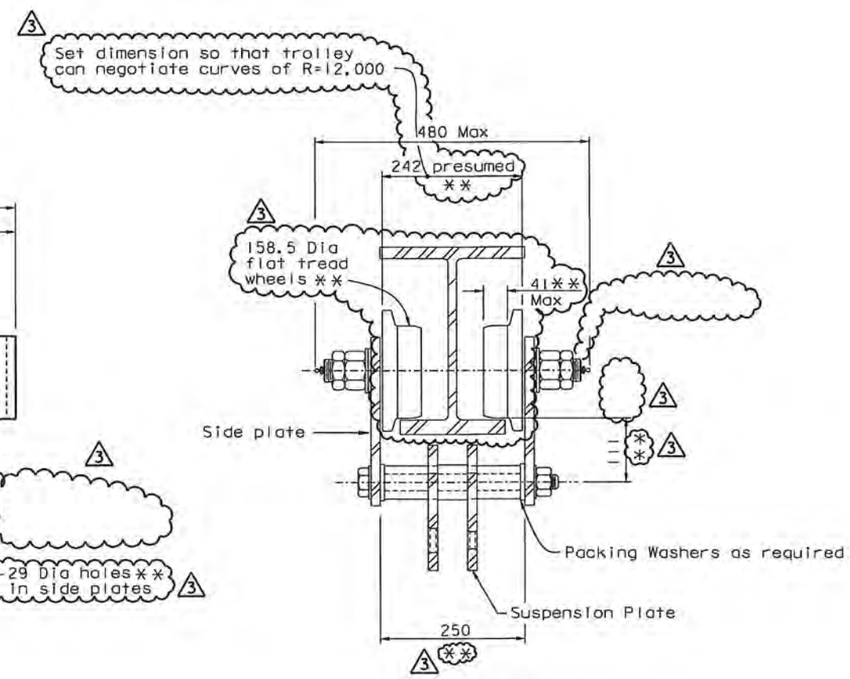

SECTION A-A

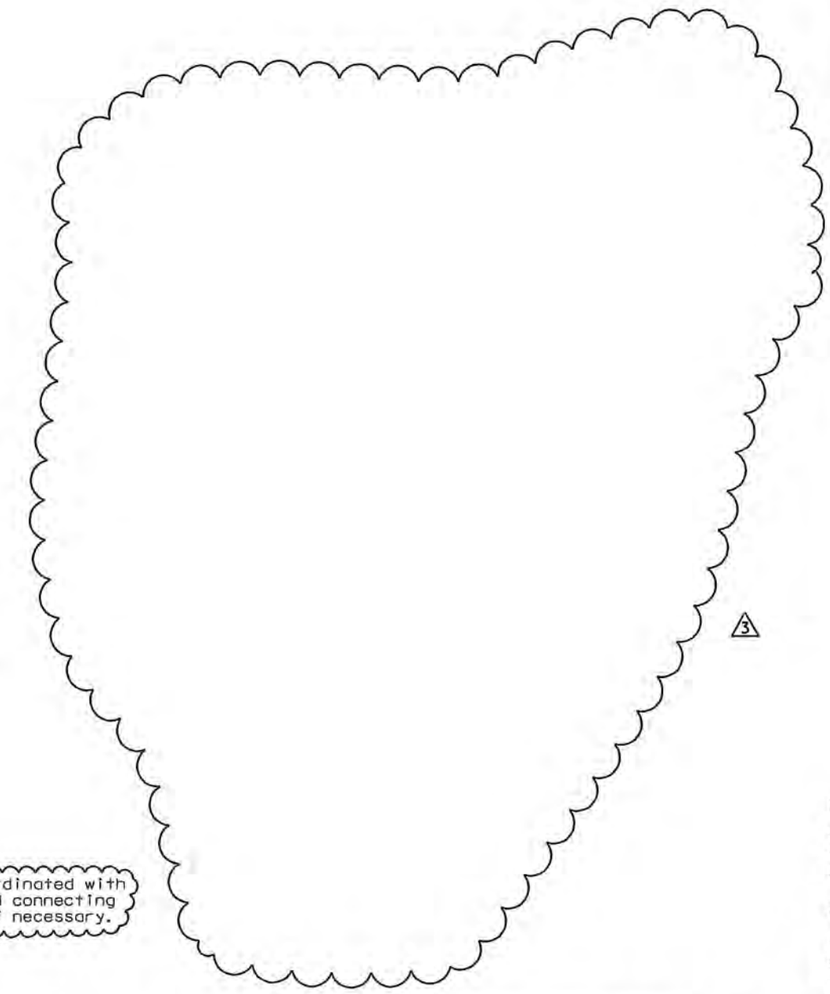

PASSIVE TROLLEY DETAILS

1:5 (Assumed dimensions) 3

3 ** Denotes dimension to be co-ordinated with actual trolley dimensions and connecting part revised by fabricator if necessary.

3 REVISION 3 SUPERSEDES REVISIONS 1 & 2

CONTRACT CHANGE ORDER NO. 24S1
SHEET 73 OF 120

REQUESTS FOR INFORMATION NOT ADDRESSED IN THIS CCO REMAIN IN FORCE

MARK	DATE	DESCRIPTIONS	BY	CH'D	CCO#
3	08/21/09	TRAVELER MODIFICATIONS	BP	AS	24S1
2	07/20/07	RAIL CHANGE & MISCELLANEOUS DETAILS	BP	NV	24
1	08/04/06	TRAVELER RAILS	BP	NV	24

REVISIONS

R. Valizadeh/V. Toan/Y.L./W.L./F.C.
DESIGN OVERSIGHT
Roya Valizadeh / Vong P. Toan / Y. Liu
SIGN OFF DATE 08/21/09

Rev. Date: 5-18-98

DESIGN	BY J. Otter	CHECKED B. Prishtina	
DETAILS	BY J. Otter	CHECKED M. Roberts	
QUANTITIES	BY J. Otter	CHECKED M. Roberts	

PREPARED FOR THE STATE OF CALIFORNIA DEPARTMENT OF TRANSPORTATION

ORIGINAL SCALE IN MILLIMETERS FOR REDUCED PLANS 0 10 20 30 40 50 60 70 80 90 100

ALL DIMENSIONS ARE IN MILLIMETERS UNLESS OTHERWISE SHOWN

R. Manzanarez
PROJECT ENGINEER

CU 04
EA 0120F1

BRIDGE NO. 34-0006L/R
KILOMETER POST 13.2/13.9

DISREGARD PRINTS BEARING EARLIER REVISION DATES → REVISION DATES (PRELIMINARY STAGE ONLY) 04/25/02 01/24/02 12/13/02

SAN FRANCISCO OAKLAND BAY BRIDGE
EAST SPAN SEISMIC SAFETY PROJECT
SELF-ANCHORED SUSPENSION BRIDGE
(SUPERSTRUCTURE & TOWER)

TRAVELER SUSPENSION DETAILS NO. 1

SHEET 695R3 OF

FILE => I:\bb\04-012001\sas\contract plans and cco\cco\cco#24s1\3-revision 08-21-09\dgn\aktrv104.dgn

100 % PS&E

USERNAME => arivera DATE PLOTTED => 21 AUG 2009 TIME PLOTTED => 15:00:34

DIST.	COUNTY	ROUTE	KILOMETER POST TOTAL PROJECT	SHEET NO.	TOTAL SHEETS
04	SF	80	13.2/13.9	1113R2	1204

Caltrans Metric

REGISTERED ENGINEER - CIVIL

12-6-04
PLANS APPROVAL DATE

REGISTERED PROFESSIONAL ENGINEER Bashkim Prishtina No. C 053561 Exp. 6/30/11 CIVIL STATE OF CALIFORNIA

The State of California or its officers or agents shall not be responsible for the accuracy or completeness of electronic copies of this plan sheet.

T.Y. LIN / MOFFATT & NICHOL
825 BATTERY STREET
SAN FRANCISCO, CA 94111

Caltrans now has a web site! To get to the web site, go to: http://www.dot.ca.gov

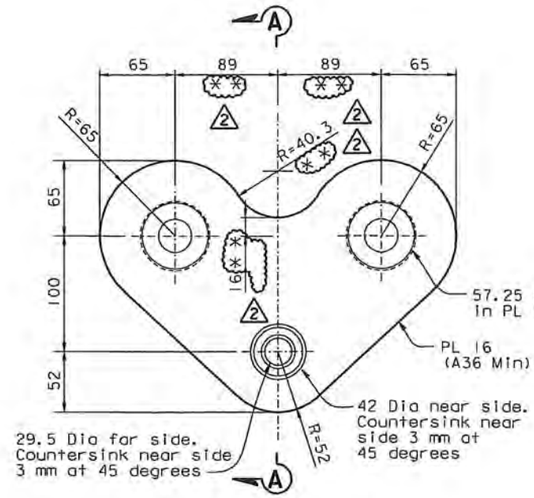

ELEVATION
Type 1A & 1B

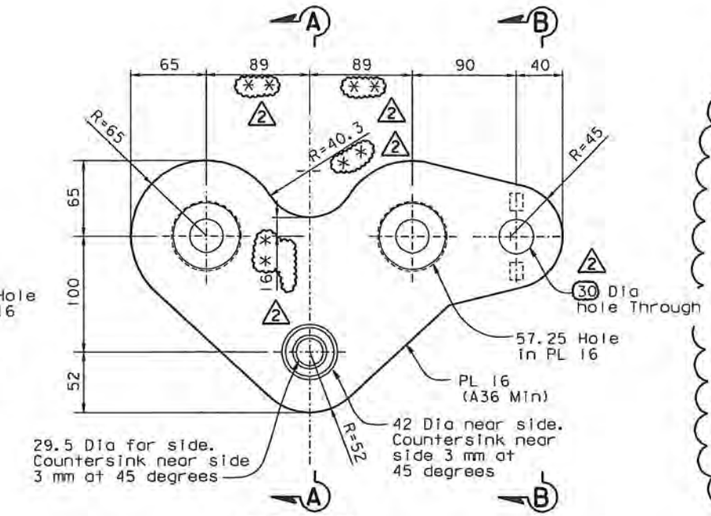

ELEVATION
Type 2B

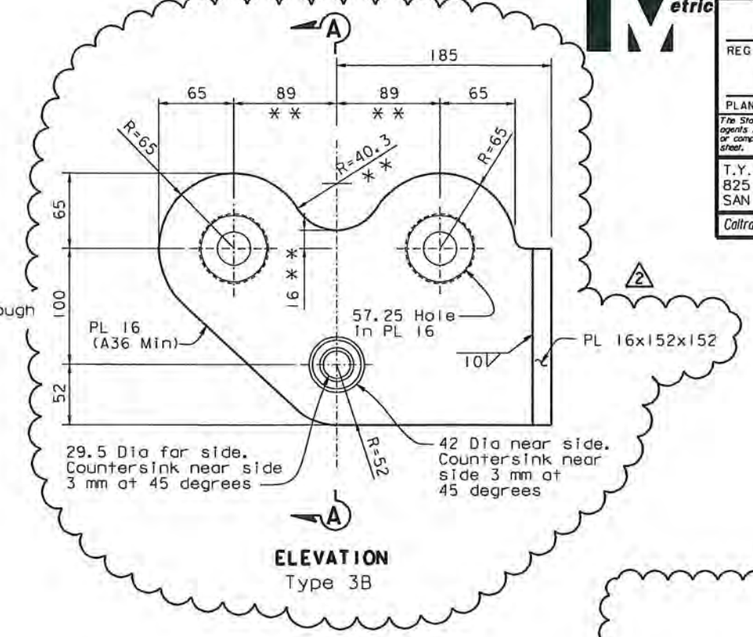

ELEVATION
Type 3B

SUSPENSION PLATE DETAILS
1:2.5

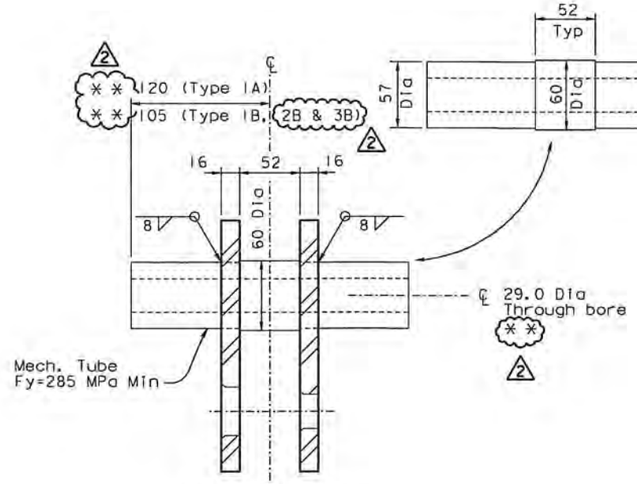

SECTION A-A
1:2.5

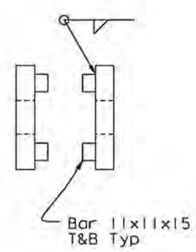

SECTION B-B
1:2.5

** Denotes dimension to be co-ordinated with actual trolley dimensions and revised by fabricator if necessary.

29 Dia for 28.5 Dia bolt

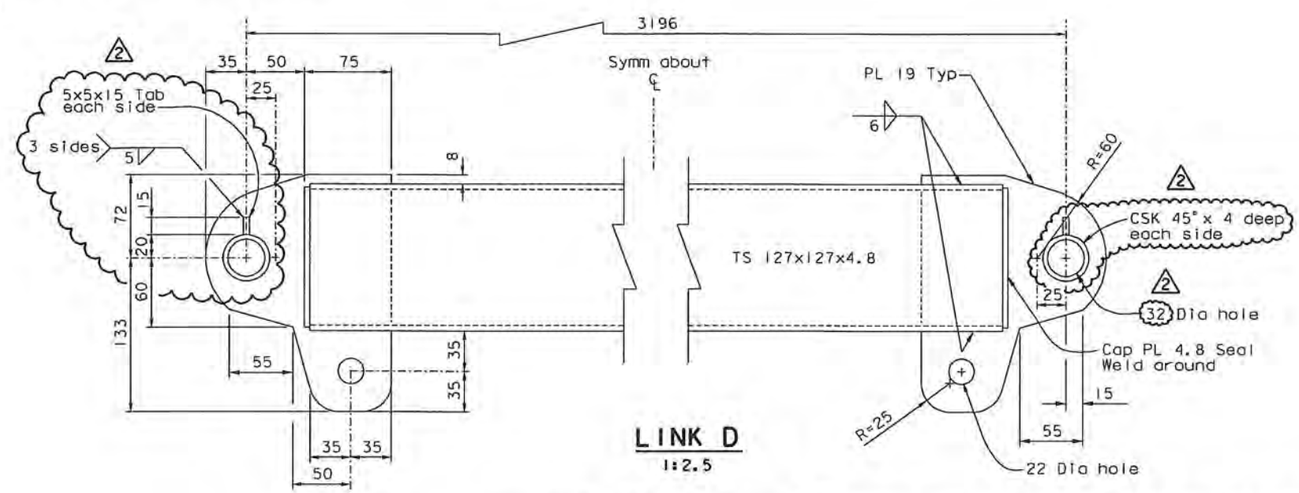

LINK D
1:2.5

2 REVISION 2 SUPERSEDES REVISION 1

CONTRACT CHANGE ORDER NO. 24S1
SHEET 74 OF 120

REQUESTS FOR INFORMATION NOT ADDRESSED IN THIS CCO REMAIN IN FORCE

ALL DIMENSIONS ARE IN MILLIMETERS UNLESS OTHERWISE SHOWN

MARK	DATE	DESCRIPTIONS	BY	CH'D	CCO#
2	06/19/09	TRAVELER MODIFICATIONS	BP	AS	24S1
1	01/20/07	RAIL CHANGE & MISCELLANEOUS DETAILS	BP	NV	24

REVISIONS

R. Vallzadeh/V. Toan/Y.L./W.L./F.C.
DESIGN OVERSIGHT
Roya Vallzadeh / Vong Toan / Y. Liu
SIGN OFF DATE 06/19/09

Rev. Date: 5-18-98

DESIGN BY J. Otter CHECKED B. Prishtina
DETAILS BY J. Otter CHECKED M. Roberts
QUANTITIES BY J. Otter CHECKED M. Roberts

PREPARED FOR THE STATE OF CALIFORNIA DEPARTMENT OF TRANSPORTATION

R. Manzanarez
PROJECT ENGINEER

BRIDGE NO. 34-0006L/R
KILOMETER POST 13.2/13.9

SAN FRANCISCO OAKLAND BAY BRIDGE
EAST SPAN SEISMIC SAFETY PROJECT
SELF-ANCHORED SUSPENSION BRIDGE
(SUPERSTRUCTURE & TOWER)

TRAVELER SUSPENSION DETAILS NO. 2

ORIGINAL SCALE IN MILLIMETERS FOR REDUCED PLANS 0 10 20 30 40 50 60 70 80 90 100

CU 04
EA 0120F1

DISREGARD PRINTS BEARING EARLIER REVISION DATES 04/29/02 01/20/03 12/19/02

REVISION DATES (PRELIMINARY STAGE ONLY)

SHEET 696R2 OF

FILE => I:\bb\04-0120F1\sas\contract plans and cco\cco\cco#24s1\2-revision 06-19-09\dgn\aktrv105.dgn

100 % PS&E

USERNAME => dwinrow DATE PLOTTED => 17 JUN 2009 TIME PLOTTED => 10:49:21

DIST.	COUNTY	ROUTE	KILOMETER POST TOTAL PROJECT	SHEET NO.	TOTAL SHEETS
04	SF	80	13.2/13.9	1114R2	1204

Caltrans Metric

REGISTERED ENGINEER - CIVIL

12-6-04

PLANS APPROVAL DATE

The State of California or its officers or agents shall not be responsible for the accuracy or completeness of electronic copies of this plan sheet.

REGISTERED PROFESSIONAL ENGINEER Bashkim Prishtina No. C 053561 Exp. 6/30/11 CIVIL STATE OF CALIFORNIA

T.Y. LIN / MOFFATT & NICHOL
825 BATTERY STREET
SAN FRANCISCO, CA 94111

Caltrans now has a web site! To get to the web site, go to: http://www.dot.ca.gov

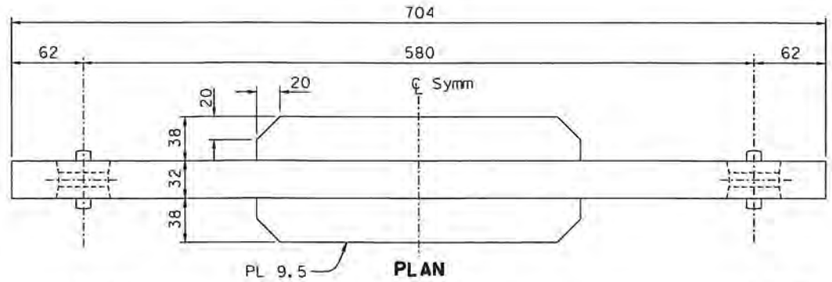

PLAN

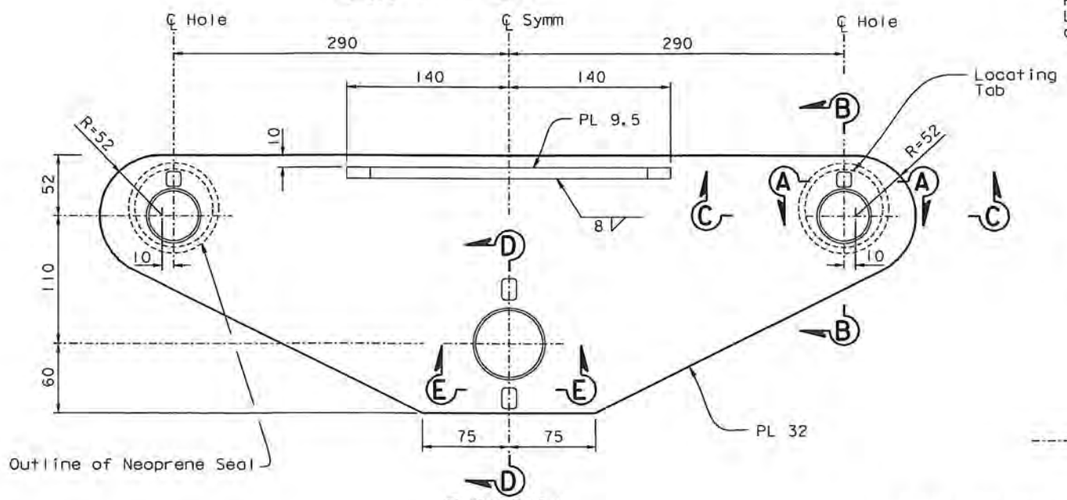

ELEVATION

LINK A

1:2.5

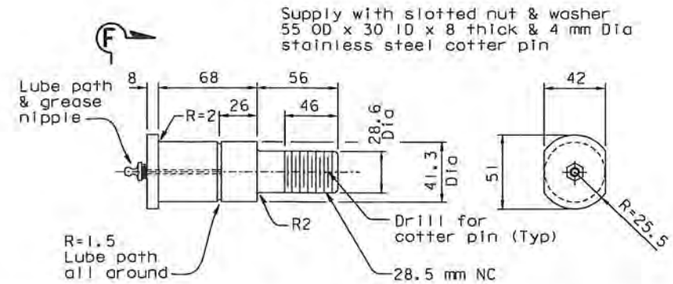

ELEVATION

SECTION F-F

PIN P1

1:2

Fy=300 MPa Min

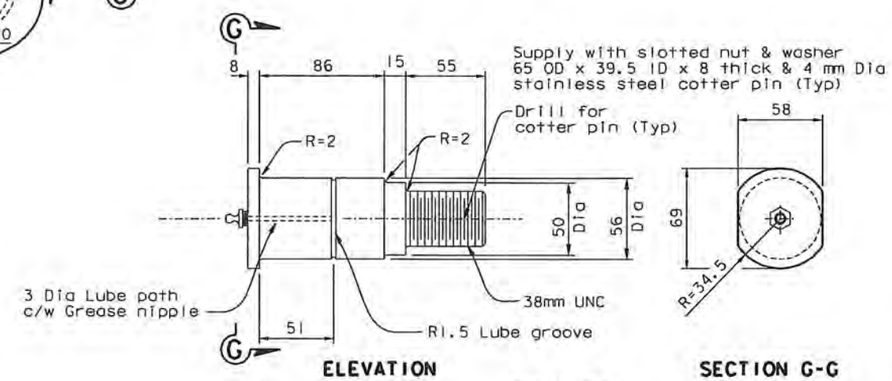

ELEVATION

SECTION G-G

PIN P2

1:2

Fy = 300 MPa

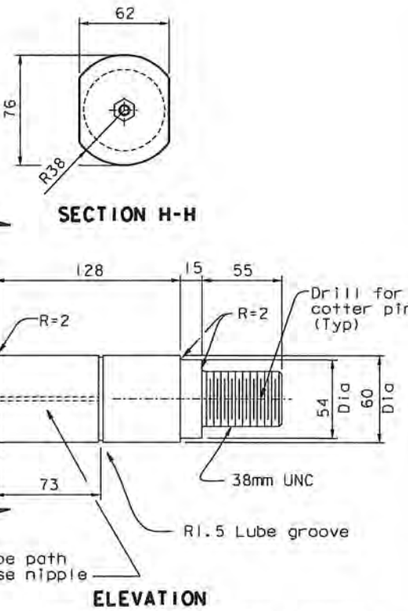

SECTION H-H

ELEVATION

Supply with slotted nut & washer
70 OD x 39.5 ID x 8 thick & 4 mm Dia
stainless steel cotter pin

PIN P3

1:2

Fy=300 MPa

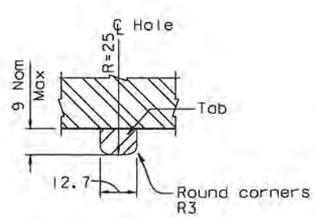

SECTION A-A

1:1

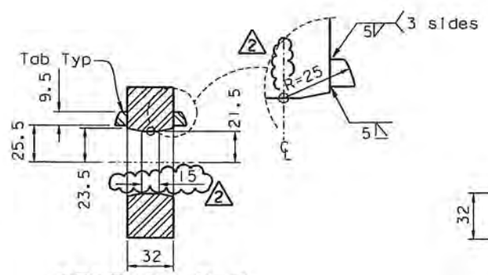

SECTION B-B

1:2

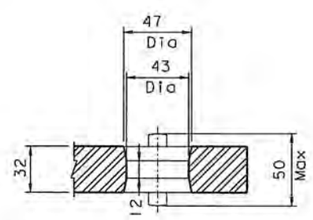

SECTION C-C

1:2

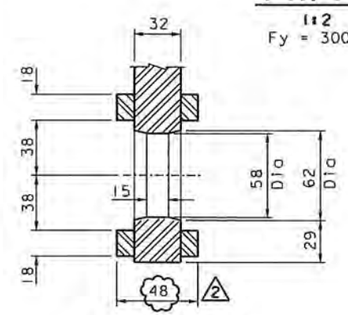

SECTION D-D

1:2

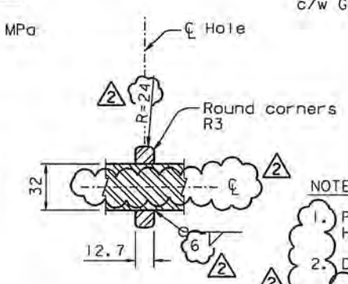

SECTION E-E

1:2

NOTES:

1. Pin Material Fy = 300 MPa Min. Carbon Steel, Hot dip galvanized.
2. Drill out lube path after galvanizing.
3. For minimum Charpy requirements, see Traveler Material Notes.
4. Diameters shown include the thickness of the galvanizing.

REVISION 2 SUPERSEDES REVISION 1

CONTRACT CHANGE ORDER NO. 24S1

SHEET 75 OF 120

REQUESTS FOR INFORMATION NOT ADDRESSED IN THIS CCO REMAIN IN FORCE

ALL DIMENSIONS ARE IN MILLIMETERS UNLESS OTHERWISE SHOWN

MARK	DATE	DESCRIPTIONS	BY	CH'D	CCO#
2	06/19/09	TRAVELER MODIFICATIONS	BP	AS	24S1
1	07/20/07	RAIL CHANGE & MISCELLANEOUS DETAILS	BP	NV	24

REVISIONS

R. Vallzadeh/V. Toan/Y.L./W.L./F.C.
DESIGN OVERSIGHT
SIGN OFF DATE 06/19/09

DESIGN BY J. Otter CHECKED B. Prishtina
DETAILS BY J. Otter CHECKED M. Roberts
QUANTITIES BY J. Otter CHECKED M. Roberts

PREPARED FOR THE STATE OF CALIFORNIA DEPARTMENT OF TRANSPORTATION

R. Manzanarez
PROJECT ENGINEER

BRIDGE NO. 34-0006L/R
KILOMETER POST 13.2/13.9

SAN FRANCISCO OAKLAND BAY BRIDGE
EAST SPAN SEISMIC SAFETY PROJECT
SELF-ANCHORED SUSPENSION BRIDGE
(SUPERSTRUCTURE & TOWER)

TRAVELER SUSPENSION DETAILS NO. 3

Rev. Date: 5-18-98

ORIGINAL SCALE IN MILLIMETERS FOR REDUCED PLANS 0 10 20 30 40 50 60 70 80 90 100

CU 04
EA 0120F1

DISREGARD PRINTS BEARING EARLIER REVISION DATES

REVISION DATES (PRELIMINARY STAGE ONLY) 01/25/02 01/24/02 12/19/02

SHEET 697R2 OF

FILE => I:\bb\04-0120F1\sas\contract plans and cco\cco\cco#24s1\2-revision 06-19-09\dgn\aktrv106.dgn

USERNAME => dwinrow DATE PLOTTED => 17 JUN 2009 TIME PLOTTED => 10:50:39

100 % PS&E

DIST.	COUNTY	ROUTE	KILOMETER POST TOTAL PROJECT	SHEET NO.	TOTAL SHEETS
04	SF	80	13.2/13.9	1115R3	1204

Caltrans Metric

REGISTERED ENGINEER - CIVIL

12-6-04
PLANS APPROVAL DATE

REGISTERED PROFESSIONAL ENGINEER Boshkim Prishtina No. C 053561 Exp. 6/30/11 CIVIL STATE OF CALIFORNIA

The State of California or its officers or agents shall not be responsible for the accuracy or completeness of electronic copies of this plan sheet.

T.Y. LIN / MOFFATT & NICHOL
825 BATTERY STREET
SAN FRANCISCO, CA 94111

Caltrans now has a web site! To get to the web site, go to: http://www.dot.ca.gov

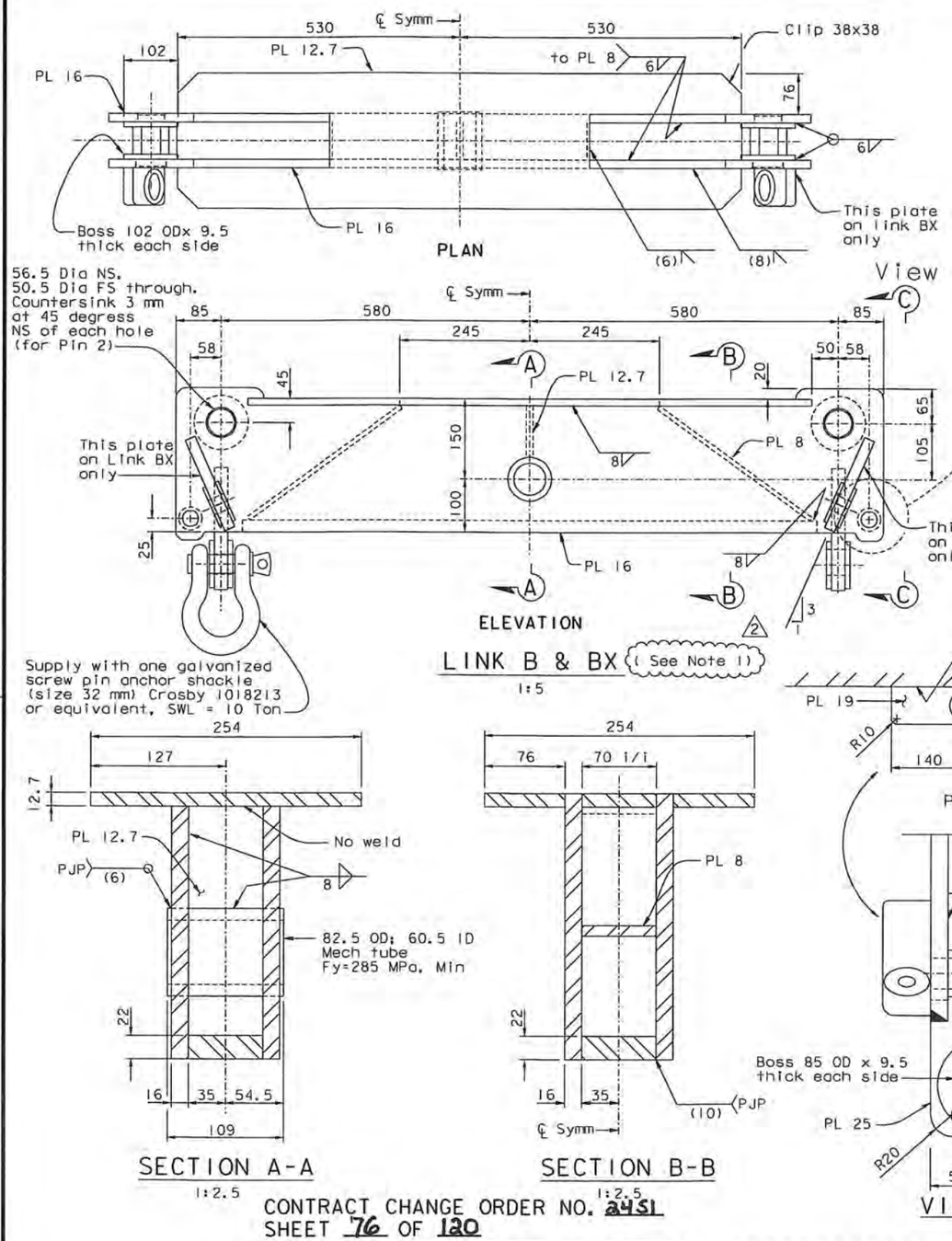

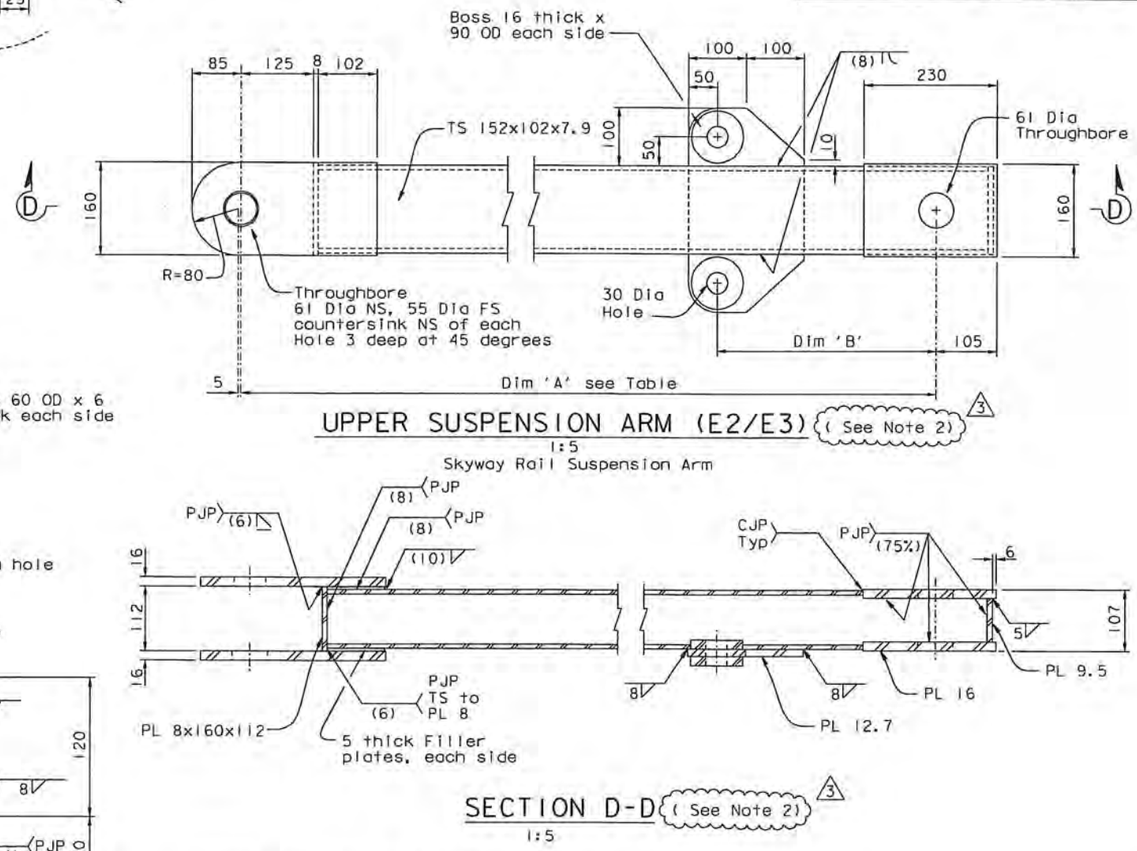

UPPER SUSPENSION ARM DIMENSIONS

TRAVELER	LOCATION	'A'	'B'
E2/E3 EB	N. Skyway	1928	380
	S. Skyway	1793	380
E2/E3 WB	N. Skyway	2346	600
	S. Skyway	1392	250

ALL DIMENSIONS ARE IN MILLIMETERS UNLESS OTHERWISE SHOWN

NOTES:

1. Link B is for suspension on the SAS Structure. Link BX is for suspension on the Skyway Structure.
2. For upper suspension arm (E2/E3) WB S. Skyway, see "Traveler Suspension Details No. 4A" sheet.

CONTRACT CHANGE ORDER NO. 2451
SHEET 76 OF 120

REQUESTS FOR INFORMATION NOT ADDRESSED IN THIS CCO REMAIN IN FORCE

MARK	DATE	DESCRIPTIONS	BY	CH'D	CCO#
3	07/09/10	TRAVELER MODIFICATIONS	BP	AS	2451
2	06/19/09	TRAVELER MODIFICATIONS	BP	AS	2451
1	07/20/07	RAIL CHANGE & MISCELLANEOUS DETAILS	BP	NV	24

REVISIONS

3 REVISION 2 SUPERSEDES REVISION 1

R. Valizadeh/V. Toan/Y.L./W.L./F.C.
DESIGN OVERSIGHT
SIGN OFF DATE 07/09/10

	BY		CHECKED
DESIGN	BY	J. Otter	CHECKED B. Prishtina
DETAILS	BY	J. Otter	CHECKED M. Roberts
QUANTITIES	BY	J. Otter	CHECKED M. Roberts

PREPARED FOR THE STATE OF CALIFORNIA DEPARTMENT OF TRANSPORTATION

R. Manzanarez
PROJECT ENGINEER

BRIDGE NO. 34-0006L/R
KILOMETER POST 13.2/13.9

SAN FRANCISCO OAKLAND BAY BRIDGE
EAST SPAN SEISMIC SAFETY PROJECT
SELF-ANCHORED SUSPENSION BRIDGE
(SUPERSTRUCTURE & TOWER)

TRAVELER SUSPENSION DETAILS NO. 4

Rev. Date: 5-18-98

ORIGINAL SCALE IN MILLIMETERS FOR REDUCED PLANS 0 10 20 30 40 50 60 70 80 90 100

CU 04
EA 0120F1

DISREGARD PRINTS BEARING EARLIER REVISION DATES 04/09/02 07/20/02 12/13/02

SHEET 698R3 OF

FILE => I:\bb\04-0120F1\sas\contract plans and cco\cco\cco#2451\7-revision 07-09-10\dgn\aktrv107.dgn

100 % PS&E

TIME PLOTTED => 14:36:25
DATE PLOTTED => 12 JUL 2010
USERNAME => crivera

DIST.	COUNTY	ROUTE	KILOMETER POST TOTAL PROJECT	SHEET NO.	TOTAL SHEETS
04	SF	80	13.2/13.9	111551	1204

REGISTERED ENGINEER - CIVIL

07-30-10

PLANS APPROVAL DATE

REGISTERED PROFESSIONAL ENGINEER Alex E. Sanjines No. C 051153 Exp. 9/30/11 CIVIL STATE OF CALIFORNIA

The State of California or its officers or agents shall not be responsible for the accuracy or completeness of electronic copies of this plan sheet.

T.Y. LIN / MOFFATT & NICHOL
825 BATTERY STREET
SAN FRANCISCO, CA 94111

Caltrans now has a web site! To get to the web site, go to: http://www.dot.ca.gov

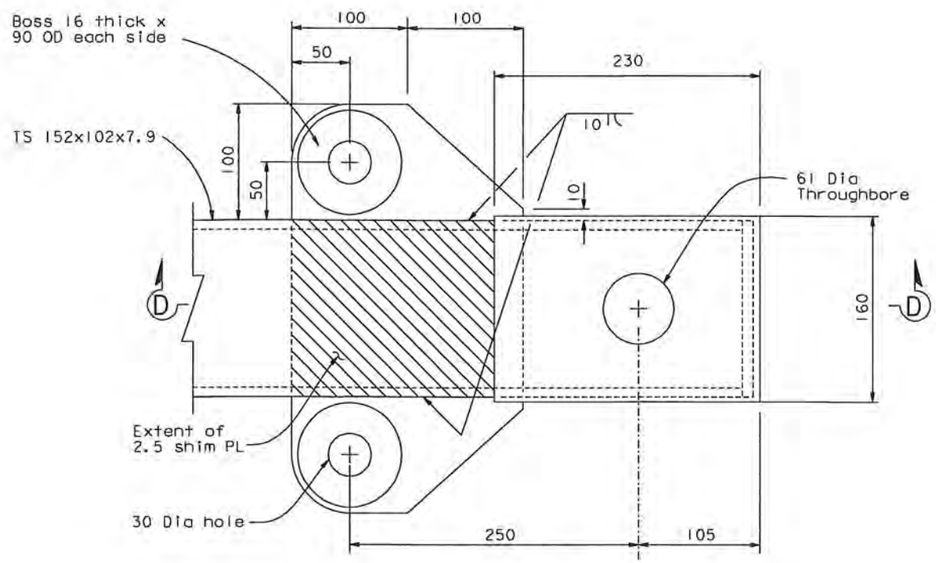

UPPER SUSPENSION ARM (E2/E3 WB S. SKYWAY)
1:2.5

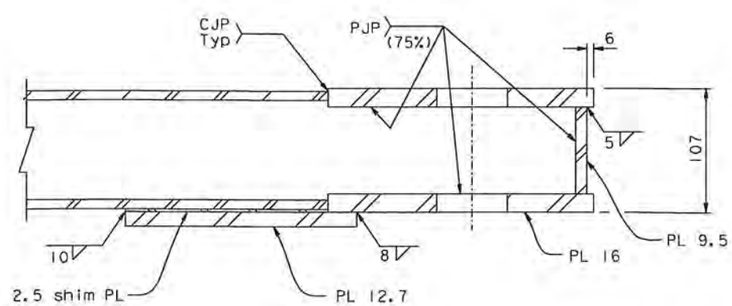

SECTION D-D
1:2.5

CONTRACT CHANGE ORDER NO. 2451
SHEET 77 OF 120

REQUESTS FOR INFORMATION NOT ADDRESSED IN THIS CCO REMAIN IN FORCE

ALL DIMENSIONS ARE IN MILLIMETERS UNLESS OTHERWISE SHOWN

R. Valizadeh/V. Toan/Y.L./W.L./F.C.
DESIGN OVERSIGHT
SIGN OFF DATE 07/30/10

MARK	DATE	DESCRIPTIONS	BY	CH'D	CCO#
0	07/30/10	TRAVELER MODIFICATIONS	JO	AS	2451

REVISIONS

DESIGN	BY J. Otter	CHECKED A. Sanjines	
DETAILS	BY J. Otter	CHECKED A. Sanjines	
QUANTITIES	BY J. Otter	CHECKED A. Sanjines	

PREPARED FOR THE STATE OF CALIFORNIA DEPARTMENT OF TRANSPORTATION

R. Manzanarez
PROJECT ENGINEER

BRIDGE NO. 34-0006L/R
KILOMETER POST 13.2/13.9

SAN FRANCISCO OAKLAND BAY BRIDGE
EAST SPAN SEISMIC SAFETY PROJECT
SELF-ANCHORED SUSPENSION BRIDGE
(SUPERSTRUCTURE & TOWER)

TRAVELER SUSPENSION DETAILS NO. 4A

Rev. Date: 5-18-98

ORIGINAL SCALE IN MILLIMETERS FOR REDUCED PLANS 0 10 20 30 40 50 60 70 80 90 100

CU 04
EA 0120F1

DISREGARD PRINTS BEARING EARLIER REVISION DATES → 07/30/10

REVISION DATES (PRELIMINARY STAGE ONLY)

SHEET 698S1 OF

FILE => I:\bb\04-0120F1\sas\contract plans and cco\cco\cco#2451\9-update 07-30-10\dgn\aktrv107a.dgn

100 % PS&E

USERNAME => dwinrow DATE PLOTTED => 03 AUG 2010 TIME PLOTTED => 11:39:34

DIST.	COUNTY	ROUTE	KILOMETER POST TOTAL PROJECT	SHEET NO.	TOTAL SHEETS
04	SF	80	13.2/13.9	1116R3	1204

Caltrans Metric

Bashkim Prishtina
REGISTERED ENGINEER - CIVIL

12-6-04
PLANS APPROVAL DATE

REGISTERED PROFESSIONAL ENGINEER
Bashkim Prishtina
No. C 053561
Exp. 6/30/11
CIVIL
STATE OF CALIFORNIA

The State of California or its officers or agents shall not be responsible for the accuracy or completeness of electronic copies of this plan sheet.

T.Y. LIN / MOFFATT & NICHOL
825 BATTERY STREET
SAN FRANCISCO, CA 94111

Caltrans now has a web site! To get to the web site, go to: http://www.dot.ca.gov

3 REVISION 3 SUPERSEDES REVISIONS 1 & 2
CONTRACT CHANGE ORDER NO. 24S1
SHEET 78 OF 120

REQUESTS FOR INFORMATION NOT ADDRESSED IN THIS CCO REMAIN IN FORCE

MARK	DATE	DESCRIPTIONS	BY	CH'D	CCO#
3	06/19/09	TRAVELER MODIFICATIONS	BP	AS	24S1
2	07/20/07	RAIL CHANGE & MISCELLANEOUS DETAILS	BP	NV	24
1	08/04/06	TRAVELER RAILS	BP	NV	24

REVISIONS

R. Valizadeh/V. Toan/Y.L./W.L./F.C.
DESIGN OVERSIGHT
Roger Valizadeh / Vong P. Toan / Y. Liu
SIGN OFF DATE 06/19/09

Rev. Date: 5-18-98

	BY	CHECKED
DESIGN	J. Otter	B. Prishtina
DETAILS	J. Otter	M. Roberts
QUANTITIES	J. Otter	M. Roberts

ORIGINAL SCALE IN MILLIMETERS FOR REDUCED PLANS 0 10 20 30 40 50 60 70 80 90 100

PREPARED FOR THE
STATE OF CALIFORNIA
DEPARTMENT OF TRANSPORTATION

ALL DIMENSIONS ARE IN MILLIMETERS UNLESS OTHERWISE SHOWN

R. Manzanarez
PROJECT ENGINEER

BRIDGE NO. 34-0006L/R
KILOMETER POST 13.2/13.9

CU 04
EA 0120F1

DISREGARD PRINTS BEARING EARLIER REVISION DATES → REVISION DATES (PRELIMINARY STAGE ONLY) 04/19/02 07/01/02 12/19/02

3 This Sheet intentionally left blank.

100 % PS&E

SAN FRANCISCO OAKLAND BAY BRIDGE
EAST SPAN SEISMIC SAFETY PROJECT
SELF-ANCHORED SUSPENSION BRIDGE
(SUPERSTRUCTURE & TOWER)

TRAVELER SUSPENSION DETAILS NO. 5

SHEET 699R3 OF

FILE => I:\bb\04-01200I\sas\contract plans and cco\cco\cco#24s1\2-revision 06-19-09\dgn\aktrv108.dgn

USERNAME => dwinrow DATE PLOTTED => 17 JUN 2009 TIME PLOTTED => 10:58:24

DIST.	COUNTY	ROUTE	KILOMETER POST TOTAL PROJECT	SHEET NO.	TOTAL SHEETS
04	SF	80	13.2/13.9	1117R2	1204

Caltrans Metric

Bashkim Prishtina
REGISTERED ENGINEER - CIVIL

12-6-04
PLANS APPROVAL DATE

REGISTERED PROFESSIONAL ENGINEER
Bashkim Prishtina
No. C 053561
Exp. 6/30/11
CIVIL
STATE OF CALIFORNIA

The State of California or its officers or agents shall not be responsible for the accuracy or completeness of electronic copies of this plan sheet.

T.Y. LIN / MOFFATT & NICHOL
825 BATTERY STREET
SAN FRANCISCO, CA 94111

Caltrans now has a web site! To get to the web site, go to: http://www.dot.ca.gov

2 REVISION 2 SUPERSEDES REVISION 1

CONTRACT CHANGE ORDER NO. 24S1
SHEET 79 OF 120

REQUESTS FOR INFORMATION NOT ADDRESSED IN THIS CCO REMAIN IN FORCE

2 This Sheet intentionally left blank.

100 % PS&E

ALL DIMENSIONS ARE IN MILLIMETERS UNLESS OTHERWISE SHOWN

R. Valizadeh/V. Toan/Y.L./W.L./F.C.
DESIGN OVERSIGHT
Roger Valizadeh / Vong P. Toan / Y. Liu
SIGN OFF DATE 06/19/09

MARK	DATE	DESCRIPTIONS	BY	CH'D	CCO#
2	06/19/09	TRAVELER MODIFICATIONS	BP	AS	24S1
1	07/20/07	RAIL CHANGE & MISCELLANEOUS DETAILS	BP	NV	24

REVISIONS

	BY	CHECKED
DESIGN	J. Otter	B. Prishtina
DETAILS	J. Otter	M. Roberts
QUANTITIES	J. Otter	M. Roberts

PREPARED FOR THE
STATE OF CALIFORNIA
DEPARTMENT OF TRANSPORTATION

R. Manzanarez
PROJECT ENGINEER

BRIDGE NO. 34-0006L/R
KILOMETER POST 13.2/13.9

SAN FRANCISCO OAKLAND BAY BRIDGE
EAST SPAN SEISMIC SAFETY PROJECT
SELF-ANCHORED SUSPENSION BRIDGE
(SUPERSTRUCTURE & TOWER)

TRAVELER SUSPENSION DETAILS NO. 6

Rev. Date: 5-18-98

ORIGINAL SCALE IN MILLIMETERS FOR REDUCED PLANS 0 10 20 30 40 50 60 70 80 90 100

CU 04
EA 0120F1

DISREGARD PRINTS BEARING EARLIER REVISION DATES

REVISION DATES (PRELIMINARY STAGE ONLY) 04/15/02 07/27/02 12/19/02

SHEET 700R2 OF

FILE => I:\bb\04-012001\sas\contract plans and cco\cco\cco#24s1\2-revision 06-19-09\dgn\aktrv109.dgn

USERNAME => dwinrow DATE PLOTTED => 17 JUN 2009 TIME PLOTTED => 11:00:30

DIST.	COUNTY	ROUTE	KILOMETER POST TOTAL PROJECT	SHEET NO.	TOTAL SHEETS
04	SF	80	13.2/13.9	1118R2	1204

Caltrans Metric

Boshkim Prishtina
REGISTERED ENGINEER - CIVIL

12-6-04
PLANS APPROVAL DATE

REGISTERED PROFESSIONAL ENGINEER
Boshkim Prishtina
No. C 053561
Exp. 6/30/11
CIVIL
STATE OF CALIFORNIA

The State of California or its officers or agents shall not be responsible for the accuracy or completeness of electronic copies of this plan sheet.

T.Y. LIN / MOFFATT & NICHOL
825 BATTERY STREET
SAN FRANCISCO, CA 94111

Caltrans now has a web site! To get to the web site, go to: http://www.dot.ca.gov

2 This Sheet Intentionally left blank.

2 REVISION 2 SUPERSEDES REVISION 1

CONTRACT CHANGE ORDER NO. 24S1
SHEET 80 OF 120

REQUESTS FOR INFORMATION NOT ADDRESSED IN THIS CCO REMAIN IN FORCE

ALL DIMENSIONS ARE IN MILLIMETERS UNLESS OTHERWISE SHOWN

R. Vallizadeh/V. Toan/Y.L./W.L./F.C.
DESIGN OVERSIGHT
Roya Vallizadeh / Vong Toan / Y. Liu
SIGN OFF DATE 06/19/09

MARK	DATE	DESCRIPTIONS	BY	CH'D	CCO#
2	06/19/09	TRAVELER MODIFICATIONS	BP	AS	24S1
1	07/20/07	RAIL CHANGE & MISCELLANEOUS DETAILS	BP	NV	24

REVISIONS

DESIGN	BY J. Otter	CHECKED B. Prishtina	
DETAILS	BY J. Otter	CHECKED M. Roberts	
QUANTITIES	BY J. Otter	CHECKED M. Roberts	

PREPARED FOR THE STATE OF CALIFORNIA DEPARTMENT OF TRANSPORTATION

R. Manzanarez
PROJECT ENGINEER

BRIDGE NO. 34-0006L/R
KILOMETER POST 13.2/13.9

SAN FRANCISCO OAKLAND BAY BRIDGE
EAST SPAN SEISMIC SAFETY PROJECT
SELF-ANCHORED SUSPENSION BRIDGE
(SUPERSTRUCTURE & TOWER)

TRAVELER SUSPENSION DETAILS NO. 7

Rev. Date: 5-18-98

ORIGINAL SCALE IN MILLIMETERS FOR REDUCED PLANS 0 10 20 30 40 50 60 70 80 90 100

CU 04
EA 0120F1

DISREGARD PRINTS BEARING EARLIER REVISION DATES → 04/25/02 01/07/02 12/19/02

REVISION DATES (PRELIMINARY STAGE ONLY)

SHEET 701R2 OF

FILE => I:\bb\04-012001\sas\contract plans and cco\cco\cco=24s1\2-revision 06-19-09\dgn\oktrv110.dgn

100 % PS&E

USERNAME => dwinrow DATE PLOTTED => 17 JUN 2009 TIME PLOTTED => 11:02:08

DIST.	COUNTY	ROUTE	KILOMETER POST TOTAL PROJECT	SHEET NO.	TOTAL SHEETS
04	SF	80	13.2/13.9	1119R3	1204

Bashkim Prishtina
REGISTERED ENGINEER - CIVIL
12-6-04
PLANS APPROVAL DATE

REGISTERED PROFESSIONAL ENGINEER Bashkim Prishtina No. C 053561 Exp. 6/30/11 CIVIL STATE OF CALIFORNIA

The State of California or its officers or agents shall not be responsible for the accuracy or completeness of electronic copies of this plan sheet.

T.Y. LIN / MOFFATT & NICHOL
825 BATTERY STREET
SAN FRANCISCO, CA 94111

Caltrans now has a web site! To get to the web site, go to: http://www.dot.ca.gov

Caltrans Metric

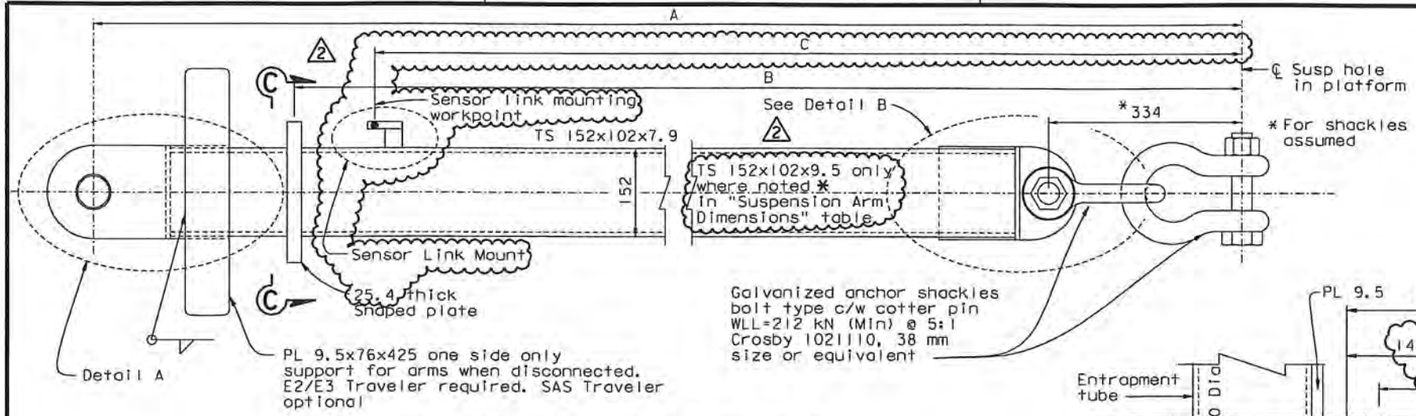

SUSPENSION ARM ELEVATION
1:5

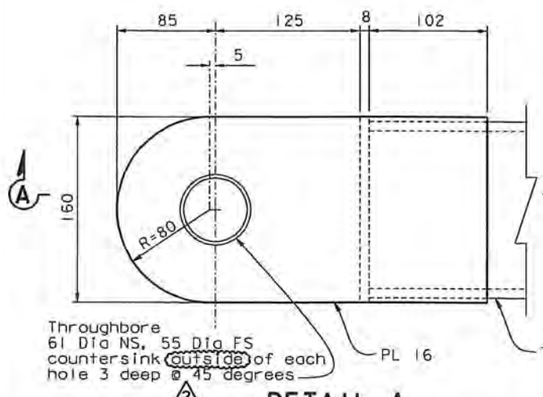

DETAIL A
1:2.5

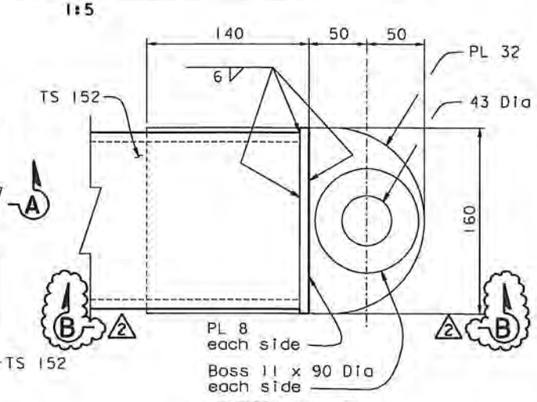

DETAIL B
1:2.5

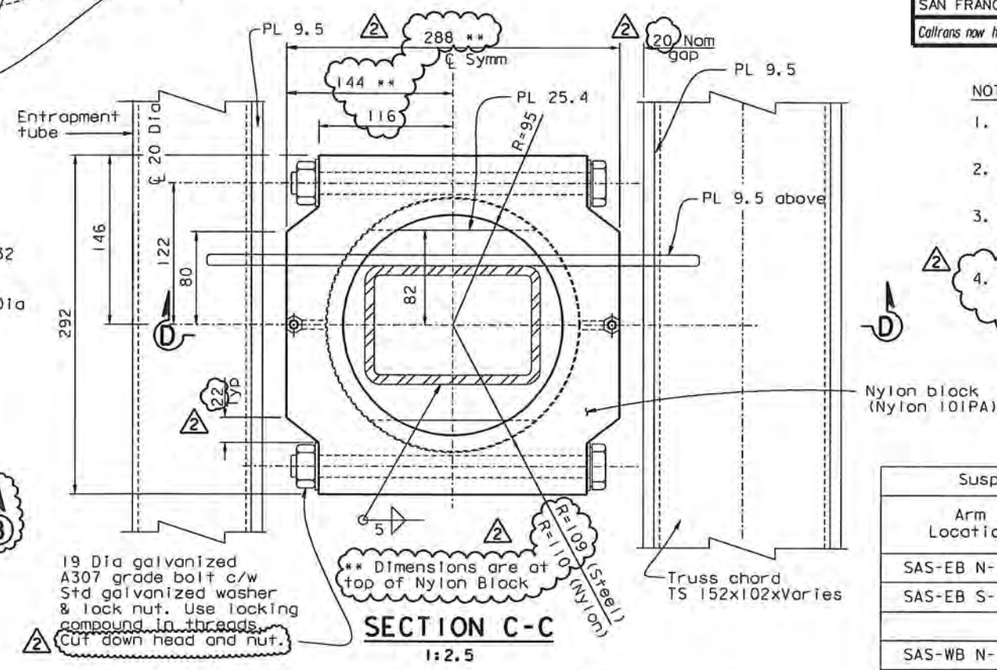

SECTION C-C
1:2.5

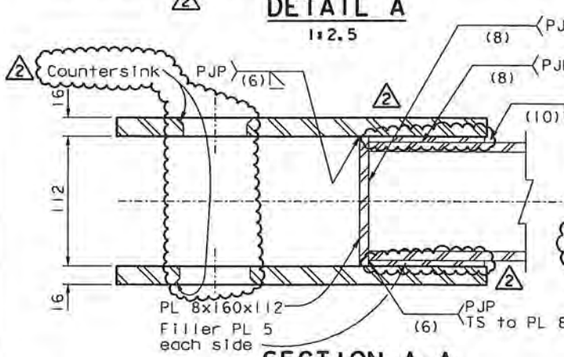

SECTION A-A
1:2.5

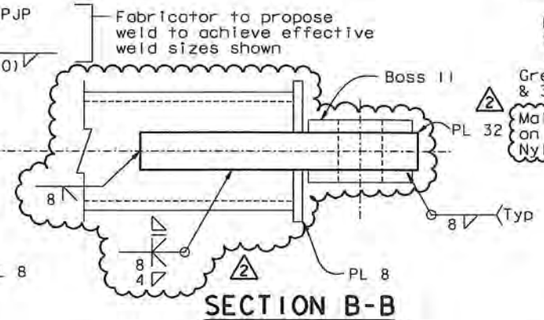

SECTION B-B
1:2.5

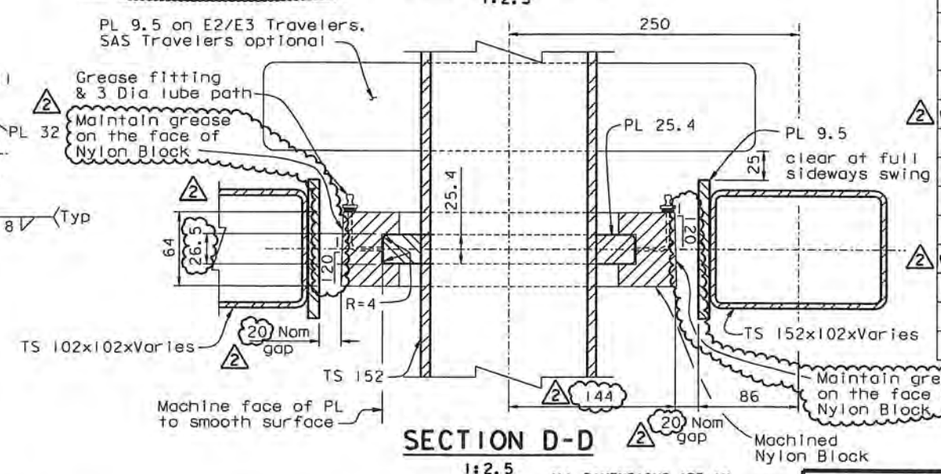

SECTION D-D
1:2.5

ALL DIMENSIONS ARE IN MILLIMETERS UNLESS OTHERWISE SHOWN

NOTES:

1. "Skyway" is for suspension arm to Skyway structure.
2. "SAS" is for suspension arm to SAS structure.
3. Traveler deck follows longitudinal slope of Bridge.
4. For Sensor link mount details, see "Skew Sensor & Control-05" sheet.

Suspension Arm Dimensions				
Arm Location	Dimensions A	B	C	A-B
SAS-EB N-side	2843	2370	2025	-
SAS-EB S-side	2686	2219	No Sensor	-
SAS-WB N-side	2686	2219	No Sensor	-
SAS-WB S-side	2700	2370	2025	-
E2/E3-EB N-Skyway	2740	2390	No Sensor	350
(*) E2/E3-EB N-SAS	3199	2390	No Sensor	809
E2/E3-EB S-Skyway	2740	2390	1950	350
E2/E3-EB S-SAS	2827	2390	2100	437
E2/E3-WB N-Skyway	2740	2390	1950	350
(*) E2/E3-WB N-SAS	3210	2390	2100	820
E2/E3-WB S-Skyway	2740	2390	No Sensor	350
E2/E3-WB S-SAS	2838	2390	No Sensor	448

* Suspension arm to be TS 152x102x9.5 where noted thus

REVISION SUPERSEDES REVISION

CONTRACT CHANGE ORDER NO. 24S1
SHEET 81 OF 120

REQUESTS FOR INFORMATION NOT ADDRESSED IN THIS CCO REMAIN IN FORCE

MARK	DATE	DESCRIPTIONS	BY	CH'D	CCO#
3	02/12/10	TRAVELER MODIFICATIONS	BP	AS	24S1
2	06/19/09	TRAVELER MODIFICATIONS	BP	AS	24S1
1	01/20/07	RAIL CHANGE & MISCELLANEOUS DETAILS	BP	NV	24

REVISIONS

R. Valizadeh/V. Toan/Y.L./W.L./F.C.
DESIGN OVERSIGHT
Ron Valizadeh / Vong Toan / Y. Liu
SIGN OFF DATE 02/12/10

Rev. Date: 5-18-98

	BY	CHECKED
DESIGN	J. Otter	B. Prishtina
DETAILS	J. Otter	M. Roberts
QUANTITIES	J. Otter	M. Roberts

ORIGINAL SCALE IN MILLIMETERS FOR REDUCED PLANS 0 10 20 30 40 50 60 70 80 90 100

PREPARED FOR THE STATE OF CALIFORNIA DEPARTMENT OF TRANSPORTATION

R. Manzanarez
PROJECT ENGINEER

CU 04
EA 0120F1

BRIDGE NO. 34-0006L/R
KILOMETER POST 13.2/13.9

DISREGARD PRINTS BEARING EARLIER REVISION DATES

REVISION DATES (PRELIMINARY STAGE ONLY) 04/29/02 01/30/02 12/19/02

SHEET 702R3 OF

SAN FRANCISCO OAKLAND BAY BRIDGE
EAST SPAN SEISMIC SAFETY PROJECT
SELF-ANCHORED SUSPENSION BRIDGE
(SUPERSTRUCTURE & TOWER)

TRAVELER SUSPENSION DETAILS NO. 8

FILE => I:\bb\04-0120F1\sas\contract plans and cco\cco\cco#24s1\5-revision 02-12-10\dgn\aktrv111.dgn

100 % PS&E

USERNAME => crivera DATE PLOTTED => 19 FEB 2010 TIME PLOTTED => 09:12:26

DIST.	COUNTY	ROUTE	KILOMETER POST TOTAL PROJECT	SHEET NO.	TOTAL SHEETS
04	SF	80	13.2/13.9	111951	1204

Caltrans Metric

Boshkim Prishtina
REGISTERED ENGINEER - CIVIL

06-19-09
PLANS APPROVAL DATE

REGISTERED PROFESSIONAL ENGINEER
Boshkim Prishtina
No. C 053561
Exp. 6/30/11
CIVIL
STATE OF CALIFORNIA

The State of California or its officers or agents shall not be responsible for the accuracy or completeness of electronic copies of this plan sheet.

T.Y. LIN / MOFFATT & NICHOL
825 BATTERY STREET
SAN FRANCISCO, CA 94111

Caltrans now has a web site! To get to the web site, go to: http://www.dot.ca.gov

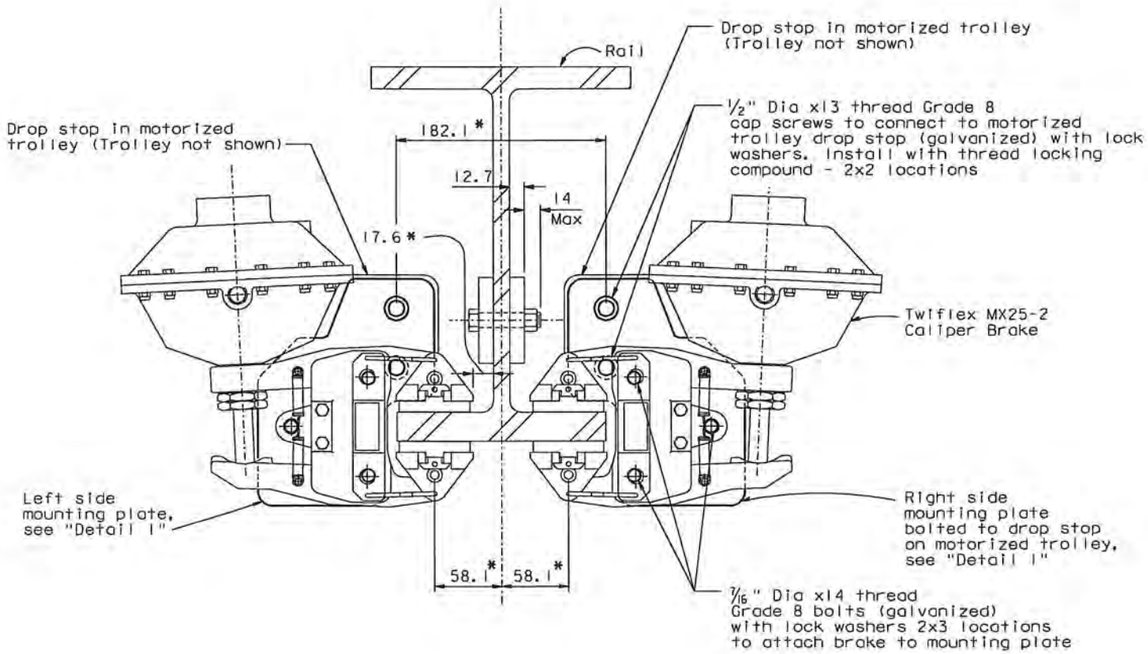

SECTION G-G
1:2.5

Mounting of Twiflex Brake

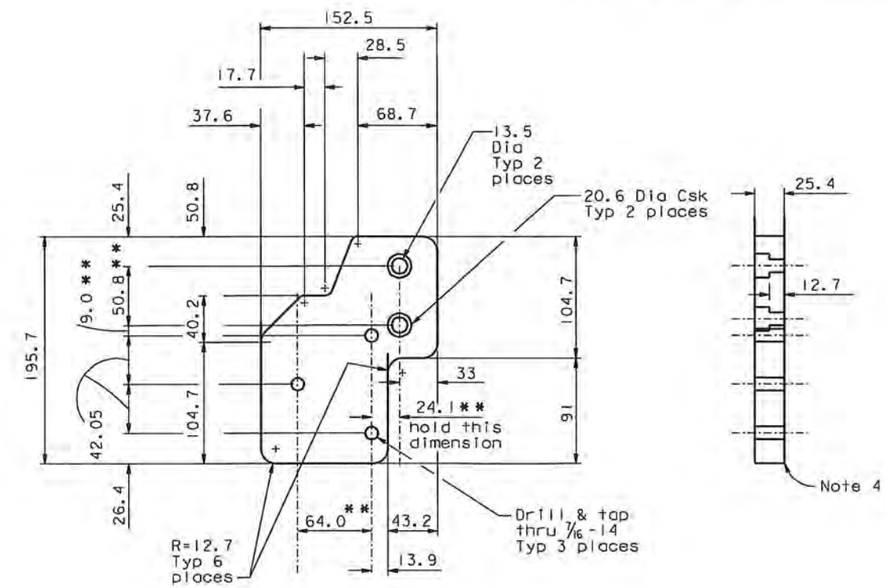

Brake Mounting Plate - Left Side As Shown
- Right Side Opposite Hand

DETAIL 1
1:2.5

* Nominal dimensions which may vary depending on the set-up width of the trolleys in order to negotiate curves in the rail.

** Coordinate these dimensions with the actual, as-supplied, trolley and brake dimensions and modify as required to position the brakes as shown in "Section G-G".

Notes:

1. Plate - ASTM A572 Grade 50.
2. Mounting plates to be hot dip galvanized.
3. Re-tap tapped holes after galvanizing.
4. Break all edges R=1.0.
5. Fabricator to acquire Twiflex Brakes & ATE Trollies, to measure actual dimensions & to revise plate dimensions if required in order to locate the brake calipers as shown on Section G-G.

CONTRACT CHANGE ORDER NO. 24S1
SHEET 82 OF 120

REQUESTS FOR INFORMATION NOT ADDRESSED IN THIS CCO REMAIN IN FORCE

ALL DIMENSIONS ARE IN MILLIMETERS UNLESS OTHERWISE SHOWN

SAN FRANCISCO OAKLAND BAY BRIDGE
EAST SPAN SEISMIC SAFETY PROJECT
SELF-ANCHORED SUSPENSION BRIDGE
(SUPERSTRUCTURE & TOWER)

TRAVELER SUSPENSION DETAILS NO. 9

R. Valizadeh/V. Toan/Y.L./W.L./F.C.
DESIGN OVERSIGHT
Roger Valizadeh / Vong Toan / Y. Lin
SIGN OFF DATE 08/26/09

MARK	DATE	DESCRIPTIONS	BY	CH'D	CCO#
0	08/26/09	TRAVELER MODIFICATIONS	BP	AS	24S1

REVISIONS

DESIGN	BY J. Otter	CHECKED B. Prishtina	
DETAILS	BY J. Otter	CHECKED M. Roberts	
QUANTITIES	BY J. Otter	CHECKED M. Roberts	

PREPARED FOR THE STATE OF CALIFORNIA DEPARTMENT OF TRANSPORTATION

R. Manzanarez
PROJECT ENGINEER

BRIDGE NO. 34-0006L/R
KILOMETER POST 13.2/13.9

Rev. Date: 5-18-98

ORIGINAL SCALE IN MILLIMETERS FOR REDUCED PLANS 0 10 20 30 40 50 60 70 80 90 100

CU 04
EA 0120F1

DISREGARD PRINTS BEARING EARLIER REVISION DATES

REVISION DATES (PRELIMINARY STAGE ONLY) 04/19/02 07/01/02 06/19/09

SHEET 702S1 OF

FILE => I:\bb\04-012001\sas\contract plans and cco\cco\cco#24s1\4-update 08-26-09\dgn\aktrvlla.dgn

100 % PS&E

USERNAME => arivera DATE PLOTTED => 26 AUG 2009 TIME PLOTTED => 10:18:20

DIST.	COUNTY	ROUTE	KILOMETER POST TOTAL PROJECT	SHEET NO.	TOTAL SHEETS
04	SF	80	13.2/13.9	111952	1204

Caltrans Metric

REGISTERED ENGINEER - CIVIL

02-12-10

PLANS APPROVAL DATE

REGISTERED PROFESSIONAL ENGINEER Boshkim Prishtina No. C 053561 Exp. 6/30/11 CIVIL STATE OF CALIFORNIA

The State of California or its officers or agents shall not be responsible for the accuracy or completeness of electronic copies of this plan sheet.

T.Y. LIN / MOFFATT & NICHOL
825 BATTERY STREET
SAN FRANCISCO, CA 94111

Caltrans now has a web site! To get to the web site, go to: http://www.dot.ca.gov

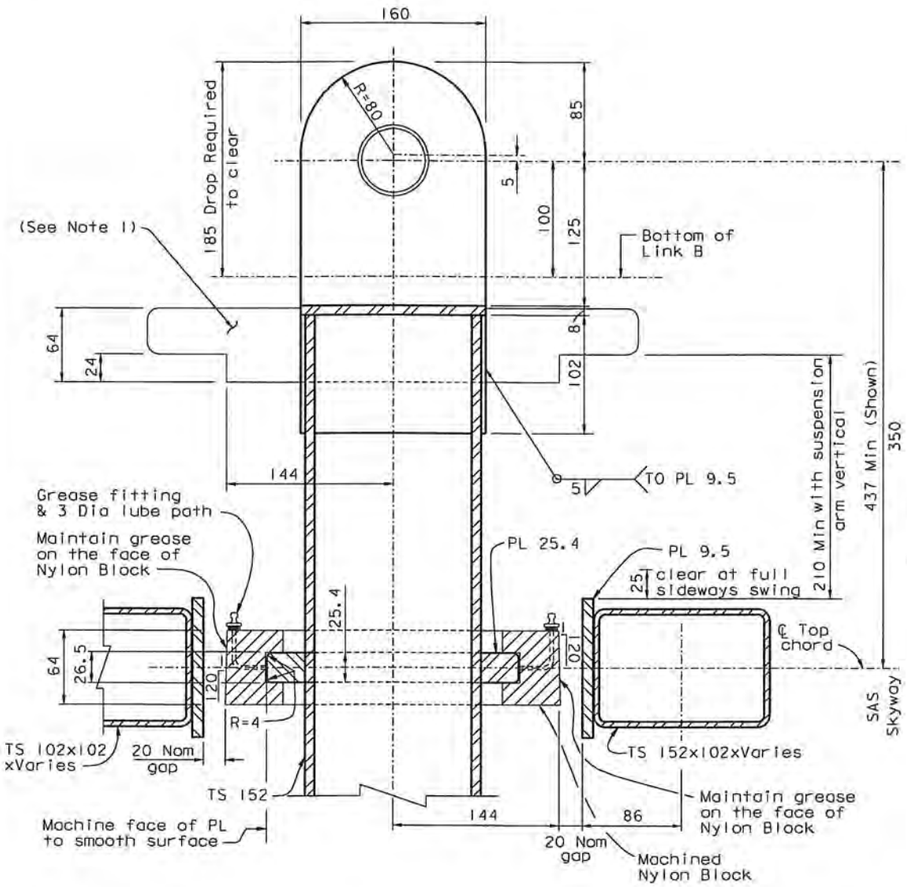

REVISION AT SUSPENSION ARMS
E2-E3 TRAVELERS

1:2.5

E2/E3 SAS-AS SHOWN
E2/E3 SKYWAY
(TO ALLOW 200 MM DROP FOR SUSPENSION CHANGE)

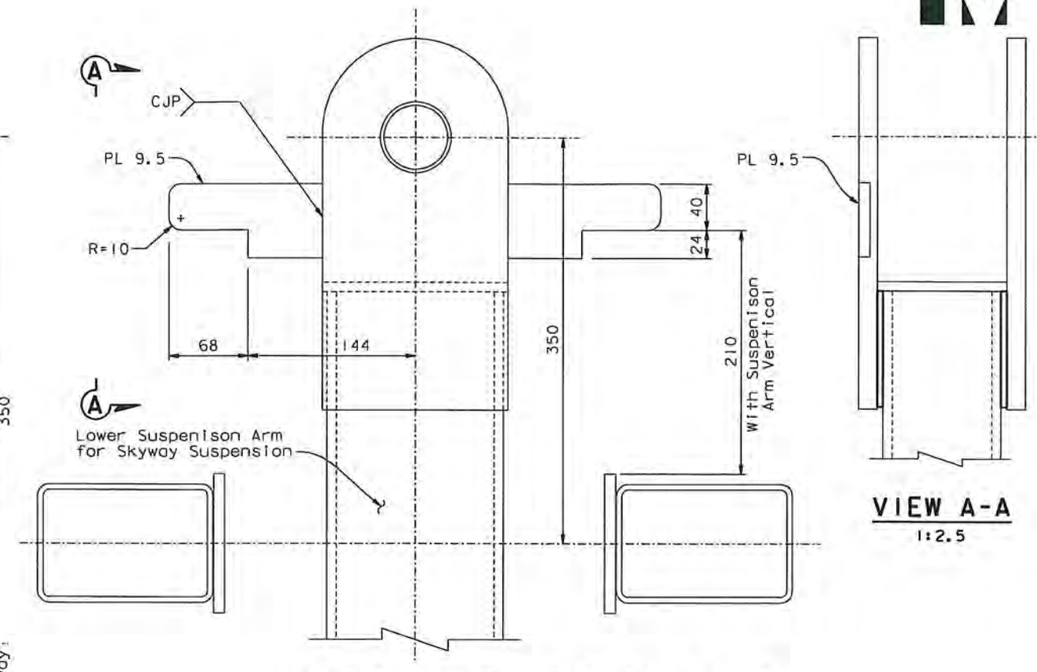

VIEW A-A

1:2.5

REVISION AT SUSPENSION ARMS
E2-E3 TRAVELERS
PL ON SKYWAY LOWER SUSPENSION ARM

1:2.5

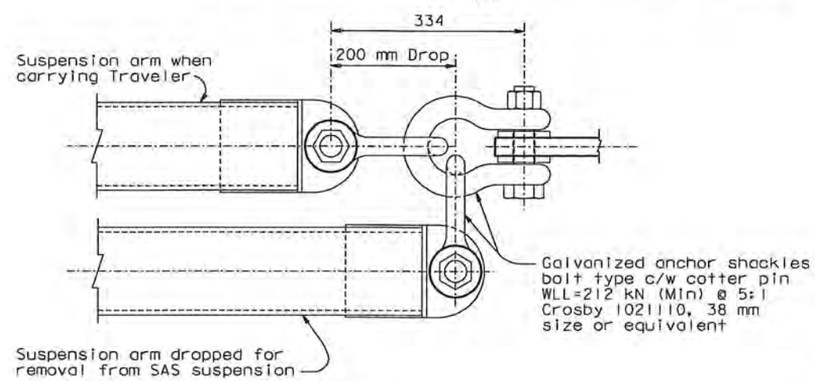

E2/E3 TRAVELERS
SAS SUSPENSION ARMS
DROP FOR DISENGAGEMENT

1:5

NOTES:

1. For Skyway Suspension, see Revision At Suspension Arms E2-E3 Travelers PL On Skyway Lower Suspension Arm.
   For SAS Suspension, modify to PL 9.5x64x425 one side only.

CONTRACT CHANGE ORDER NO. 2451
SHEET 83 OF 120

REQUESTS FOR INFORMATION NOT ADDRESSED IN THIS CCO REMAIN IN FORCE

ALL DIMENSIONS ARE IN MILLIMETERS UNLESS OTHERWISE SHOWN

R. Valizadeh/V. Toan/Y.L./W.L./F.C.
DESIGN OVERSIGHT
SIGN OFF DATE 02/12/10

MARK	DATE	DESCRIPTIONS	BY	CH'D	CCO#
0	02/12/10	TRAVELER MODIFICATIONS	BP	AS	2451

REVISIONS

	BY	CHECKED
DESIGN	J. Otter	A. Sanjines
DETAILS	J. Otter	A. Sanjines
QUANTITIES	J. Otter	A. Sanjines

PREPARED FOR THE STATE OF CALIFORNIA DEPARTMENT OF TRANSPORTATION

R. Manzanarez
PROJECT ENGINEER

BRIDGE NO. 34-0006L/R
KILOMETER POST 13.2/13.9

SAN FRANCISCO OAKLAND BAY BRIDGE
EAST SPAN SEISMIC SAFETY PROJECT
SELF-ANCHORED SUSPENSION BRIDGE
(SUPERSTRUCTURE & TOWER)

TRAVELER SUSPENSION DETAILS NO. 10

Rev. Date: 5-18-98

ORIGINAL SCALE IN MILLIMETERS FOR REDUCED PLANS 0 10 20 30 40 50 60 70 80 90 100

CU 04
EA 0120F1

DISREGARD PRINTS BEARING EARLIER REVISION DATES 02/12/10

REVISION DATES (PRELIMINARY STAGE ONLY)

SHEET 70252 OF

FILE => I:\bb\04-012001\sas\contract plans and cco\cco\cco#2451\5-revision 02-12-10\dgn\aktrvl11b.dgn

USERNAME => crivera DATE PLOTTED => 19 FEB 2010 TIME PLOTTED => 09:13:42

100 % PS&E

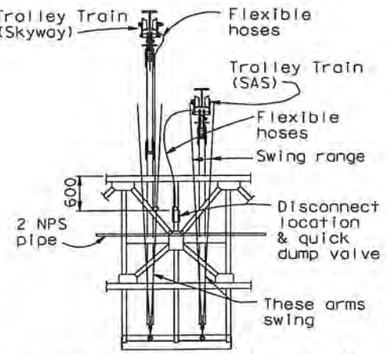

PIPING & DISCONNECT SCHEMATIC E2/E3 TRAVELERS

NTS

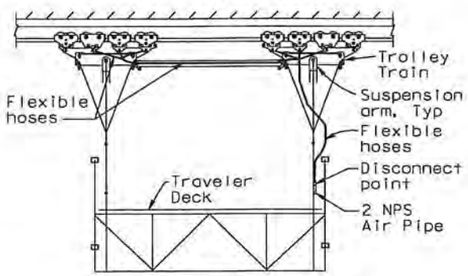

SKYWAY SUSPENSION

1:50

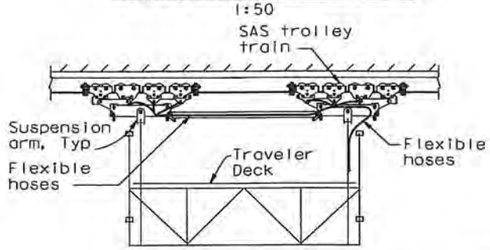

SAS SUSPENSION

1:50

PARTS FOR TROLLIES AND TROLLEY CONTROLS

Part/ No.	Description	Size	Quantity/ Traveler
1N	Throttle for North Trollies, Full flow. Deadman control. With built in emergency stop valve	1 1/4"	1
1S	Throttle for South Trollies, Full flow. Deadman control. With built in emergency stop valve	1 1/4"	1
2N	Pilot operated poppet valve for skew control on north motors	1 1/4"	1
2S	Pilot operated poppet valve for skew control on south motors 3	1 1/4"	1
3	Main System valve - pilot operated. (Poppet Valve)	1 1/2"	1
4	Quick Dump Valve for Valve 2N or 2S pilot system	1/4"	2
5	Pedal operated Main System Pilot Valve, deadman operation - To control Valve 3 (Note 20)	1/4"	2
3 5A	Trolley Air Lockout Valve (if elevating platforms are up)	1/4"	1
6	Double check valve - shuttle valve	3/8"	2
7	Pilot operated for operating valves 2N or 2S	1/4"	4
8	Pilot operated for applying brakes at extreme skew	3/8"	2
9	Bypass valve allowing brake release after brakes have been applied due to excess skew	3/8"	2
10	Quick Dump Valve for Brakes	1/2"	2
11	Quick Disconnect couplings. with closure caps. (Required on E2/E3 Travelers only) Note 2	1/2"	2: (4)
12	Quick Disconnect couplings. with closure caps. (Required on E2/E3 Travelers only) Note 2	1 1/4"	4: (8)
13	Exhaust Choke Valve for speed control	1/2"	12-SAS 24-E2/E3
14	Silencer	1/2"	12-SAS 24-E2/E3
15	Whistle valve	3/8"	1
16	Whistle		1
17	Twiflex Caliper Brakes, Spring on, pressure off		16-SAS 32-E2/E3
18	Ingersoll Rand piston air motor trolley		12-SAS 24-E2/E3
19	Lubricator, Filter and Pressure Regulator	1 1/2"	1
20	Gage	50 mm	1
21	NOT USED		
22	Coupling	2"	
23	Full Port Ball Valve 3	2"	
24	Flexible Supply Hose - 12,000 long	2"	2
25	Coupling	2"	2
26	Motor shutdown over-ride valve	1/4"	2
3 27	3-Way Manual Diversion Ball Valve with Latch-Lock Lever and Nut to allow maintenance and repair of the Pneumatic System at the Trolley.	1 1/2"	1
28	NOT USED		
29	Shuttle Valve: Will be actuated by either L1 or L4 as necessary.	1/4"	1
30	Inline Lubricator: 1. Use one for each port of each Trolley Motor. 2. Plumb as close to Motor as Possible.	3/4"	24-SAS 48-E2/E3
30-A	Air Manifold: 2 X 1 1/4" NPS inlets 3 X 3/4" NPS outlets	1 1/4"	8-SAS 16-E2/E3
3 L1-L4	Skew Control Limit Valve	1/4"	4

Function Description

1. Pneumatic system operation for skew correction per skew orientotion matrix & diagram. Limit switches L2 and L3 shutdown only the motor causing excessive skew at approx 50% of Max allowable skew. This function can be over-ridden when it is necessary to operate at a greater skew: (valves (26)).

2. Limit switches L1 and L4 apply all brakes when the critical skew is reached. The brakes may be released on either the North or the South trolleys through a manual over-ride ((9)).

Caltrans Metric

DIST.	COUNTY	ROUTE	KILOMETER POST TOTAL PROJECT	SHEET NO.	TOTAL SHEETS
04	SF	80	13.2/13.9	1134R3	1204

REGISTERED ENGINEER - CIVIL

12-6-04

PLANS APPROVAL DATE

REGISTERED PROFESSIONAL ENGINEER Raupen Donikian No. M 20235 Exp. 09/30/06 MECHANICAL STATE OF CALIFORNIA

The State of California or its officers or agents shall not be responsible for the accuracy or completeness of electronic copies of this plan sheet.

T.Y. LIN / MOFFATT & NICHOL
825 BATTERY STREET
SAN FRANCISCO, CA 94111

Caltrans now has a web site! To get to the web site, go to: http://www.dot.ca.gov

NOTES:

1. For general notes see "Traveler Air System-02" sheet.
2. Quantities are for the portion of the disconnects that remain with the traveler scaffold. Quantities for the detachable portions are shown in parenthesis.

CASE	MOTOR Ms	MOTOR Mn	SKEW	L2	L3	SHUT
1	F	F	+ve	Act.	-	Mn
2	R	R	+ve	Act.	-	Ms
3	R	F	+ve	Act.	-	Mn & M
4	F	F	-ve	-	Act.	Ms
5	R	R	-ve	-	Act.	Mn
6	F	R	-ve	-	Act.	Mn & Ms

SKEW ORIENTATION MATRIX

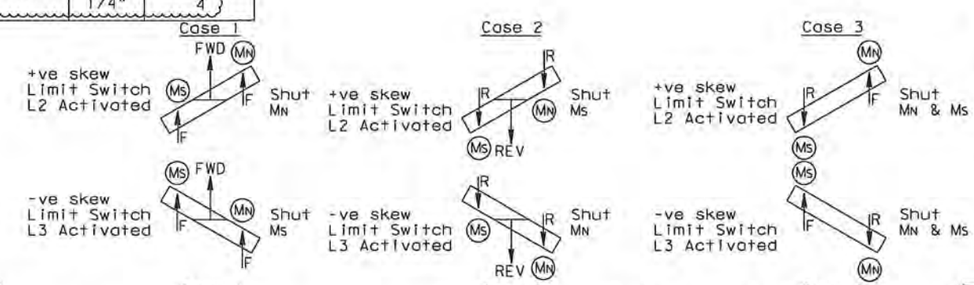

SKEW ORIENTATION DIAGRAM

REGISTERED PROFESSIONAL ENGINEER R. Henriksen No. M 029816 Exp. 06/30/12 MECHANICAL STATE OF CALIFORNIA

FOR REVISIONS ONLY

2 REVISION 2 SUPERSEDES REVISION 1

CONTRACT CHANGE ORDER NO. 24S1
SHEET 84 OF 120

REQUESTS FOR INFORMATION NOT ADDRESSED IN THIS CCO REMAIN IN FORCE

MARK	DATE	DESCRIPTIONS	BY	CH'D	CCO#
3	07/30/10	TRAVELER MODIFICATIONS	RH	NV	24S1
2	08/21/09	TRAVELER MODIFICATIONS	RH	NV	24S1
1	07/20/07	RAIL CHANGE & MISCELLANEOUS DETAILS	RD	NV	24

REVISIONS

R. Valizadeh/V. Toan/Y. L./W. L./F. C.
DESIGN OVERSIGHT
SIGN OFF DATE 07/30/10

	BY	CHECKED
DESIGN	J. Otter	R. Donikian
DETAILS	J. Otter	R. Donikian
QUANTITIES	J. Otter	M. Roberts

PREPARED FOR THE STATE OF CALIFORNIA DEPARTMENT OF TRANSPORTATION

R. Manzanarez
PROJECT ENGINEER

ALL DIMENSIONS ARE IN MILLIMETERS UNLESS OTHERWISE SHOWN

BRIDGE NO. 34-0006L/R
KILOMETER POST 13.2/13.9

SAN FRANCISCO OAKLAND BAY BRIDGE
EAST SPAN SEISMIC SAFETY PROJECT
SELF-ANCHORED SUSPENSION BRIDGE
(SUPERSTRUCTURE & TOWER)

TRAVELER AIR SYSTEM-01A 2

Rev. Date: 5-18-98

ORIGINAL SCALE IN MILLIMETERS FOR REDUCED PLANS 0 10 20 30 40 50 60 70 80 90 100

CU 04
EA 0120F1

DISREGARD PRINTS BEARING EARLIER REVISION DATES 01/29/02 01/07/02 12/15/02

REVISION DATES (PRELIMINARY STAGE ONLY)

SHEET 717R3 OF

FILE => I:\bb\04-01200I\sas\contract plans and cco\cco\cco#24s1\9-update 07-30-10\dgn\aktrvl20a.dgn

100 % PS&E

USERNAME => dwinrow DATE PLOTTED => 03 AUG 2010 TIME PLOTTED => 11:45:28

DIST.	COUNTY	ROUTE	KILOMETER POST TOTAL PROJECT	SHEET NO.	TOTAL SHEETS
04	SF	80	13.2/13.9	1134S1R2	1204

REGISTERED ENGINEER - CIVIL

06-19-09

PLANS APPROVAL DATE

The State of California or its officers or agents shall not be responsible for the accuracy or completeness of electronic copies of this plan sheet.

REGISTERED PROFESSIONAL ENGINEER R. Henriksen No. M 029816 Exp. 06/30/12 MECHANICAL STATE OF CALIFORNIA

T.Y. LIN / MOFFATT & NICHOL
825 BATTERY STREET
SAN FRANCISCO, CA 94111

Caltrans now has a web site! To get to the web site, go to: http://www.dot.ca.gov

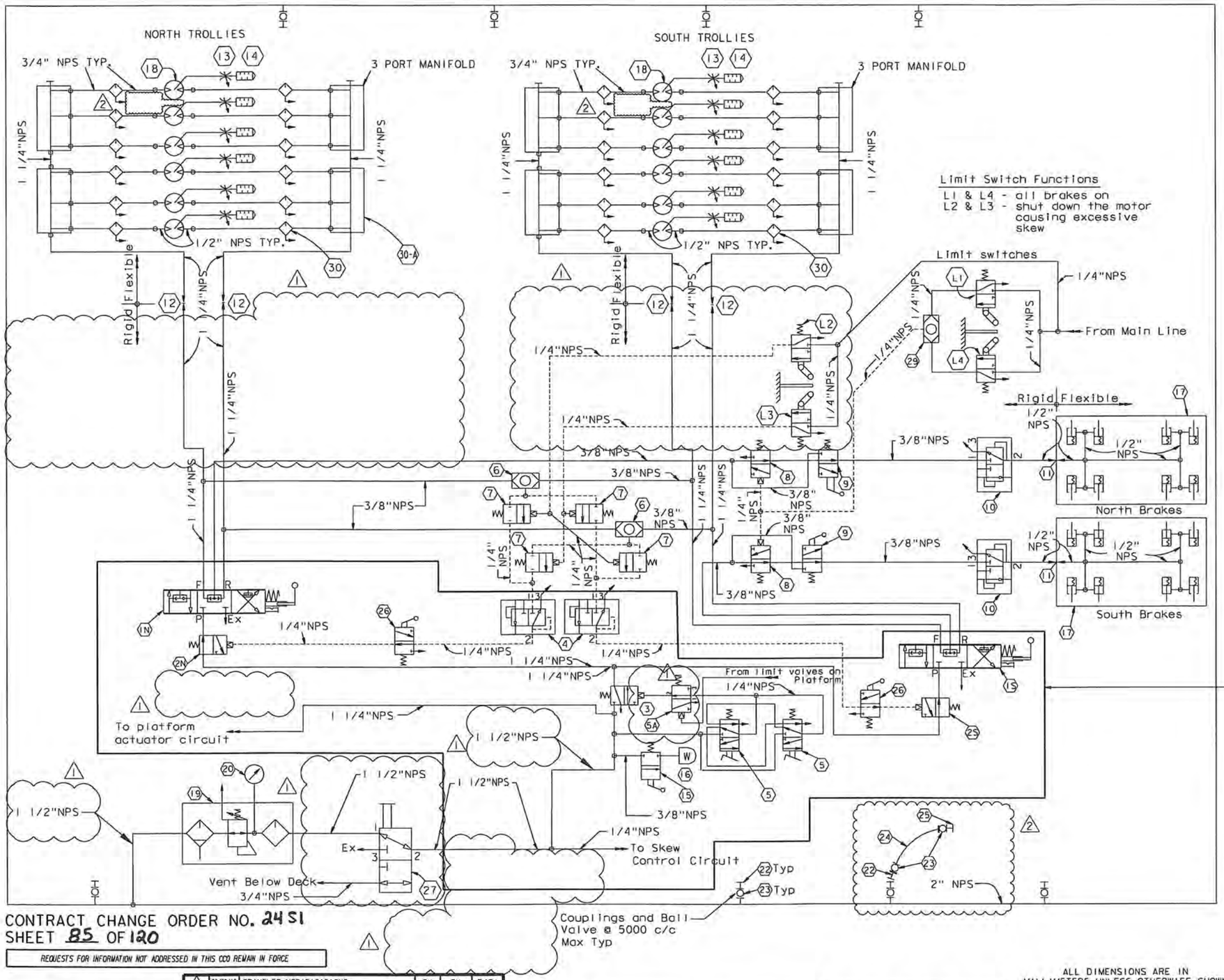

PNEUMATIC SCHEMATIC TROLLIES AND BRAKES

NTS

NOTES:

1. For parts list see "Traveler Air System - 01A" sheet.
2. For notes regarding air system see "Traveler Air System - 02A" sheet.
3. For control panel details see "Traveler Control Panel Layout" sheet.

CONTRACT CHANGE ORDER NO. 24S1
SHEET 85 OF 120

REQUESTS FOR INFORMATION NOT ADDRESSED IN THIS CCO REMAIN IN FORCE

MARK	DATE	DESCRIPTIONS	BY	CH'D	CCO#
2	01/30/10	TRAVELER MODIFICATIONS	RH	TH	24S1
1	02/12/10	TRAVELER MODIFICATIONS	RH	TH	24S1
0	06/19/09	TRAVELER MODIFICATIONS	RH	TH	24S1

REVISIONS

R. Vallizadeh/V. Toan/Y.L./W.L./F.C.
DESIGN OVERSIGHT
SIGN OFF DATE 07/30/10

Rev. Date: 5-18-98

DESIGN	BY R. Scott	CHECKED	R. Henriksen
DETAILS	BY Z. Istre	CHECKED	J. Otter
QUANTITIES	BY R. Scott	CHECKED	T. Ho

PREPARED FOR THE STATE OF CALIFORNIA DEPARTMENT OF TRANSPORTATION

ALL DIMENSIONS ARE IN MILLIMETERS UNLESS OTHERWISE SHOWN

R. Manzanarez
PROJECT ENGINEER

BRIDGE NO. 34-0006L/R
KILOMETER POST 13.2/13.9

SAN FRANCISCO OAKLAND BAY BRIDGE
EAST SPAN SEISMIC SAFETY PROJECT
SELF-ANCHORED SUSPENSION BRIDGE
(SUPERSTRUCTURE & TOWER)

TRAVELER AIR SYSTEM-01B

ORIGINAL SCALE IN MILLIMETERS FOR REDUCED PLANS 0 10 20 30 40 50 60 70 80 90 100

CU 04
EA 0120F1

DISREGARD PRINTS BEARING EARLIER REVISION DATES → 06/19/09

REVISION DATES (PRELIMINARY STAGE ONLY)

SHEET 71 OF 75 1751R2

FILE => I:\bb\04-0120F1\sas\contract plans and cco\cco\cco#24s1\9-update 07-30-10\dgn\aktrv120b.dgn

USERNAME => dwinrow DATE PLOTTED => 03 AUG 2010 TIME PLOTTED => 11:48:20

100 % PS&E

DIST.	COUNTY	ROUTE	KILOMETER POST TOTAL PROJECT	SHEET NO.	TOTAL SHEETS
04	SF	80	13.2/13.9	113452	1204

REGISTERED ENGINEER - CIVIL

06-19-09

PLANS APPROVAL DATE

PROFESSIONAL ENGINEER R. Henriksen No. M 029816 Exp. 06/30/10 MECHANICAL STATE OF CALIFORNIA

The State of California or its officers or agents shall not be responsible for the accuracy or completeness of electronic copies of this plan sheet.

T.Y. LIN / MOFFATT & NICHOL
825 BATTERY STREET
SAN FRANCISCO, CA 94111

Caltrans now has a web site! To get to the web site, go to: http://www.dot.ca.gov

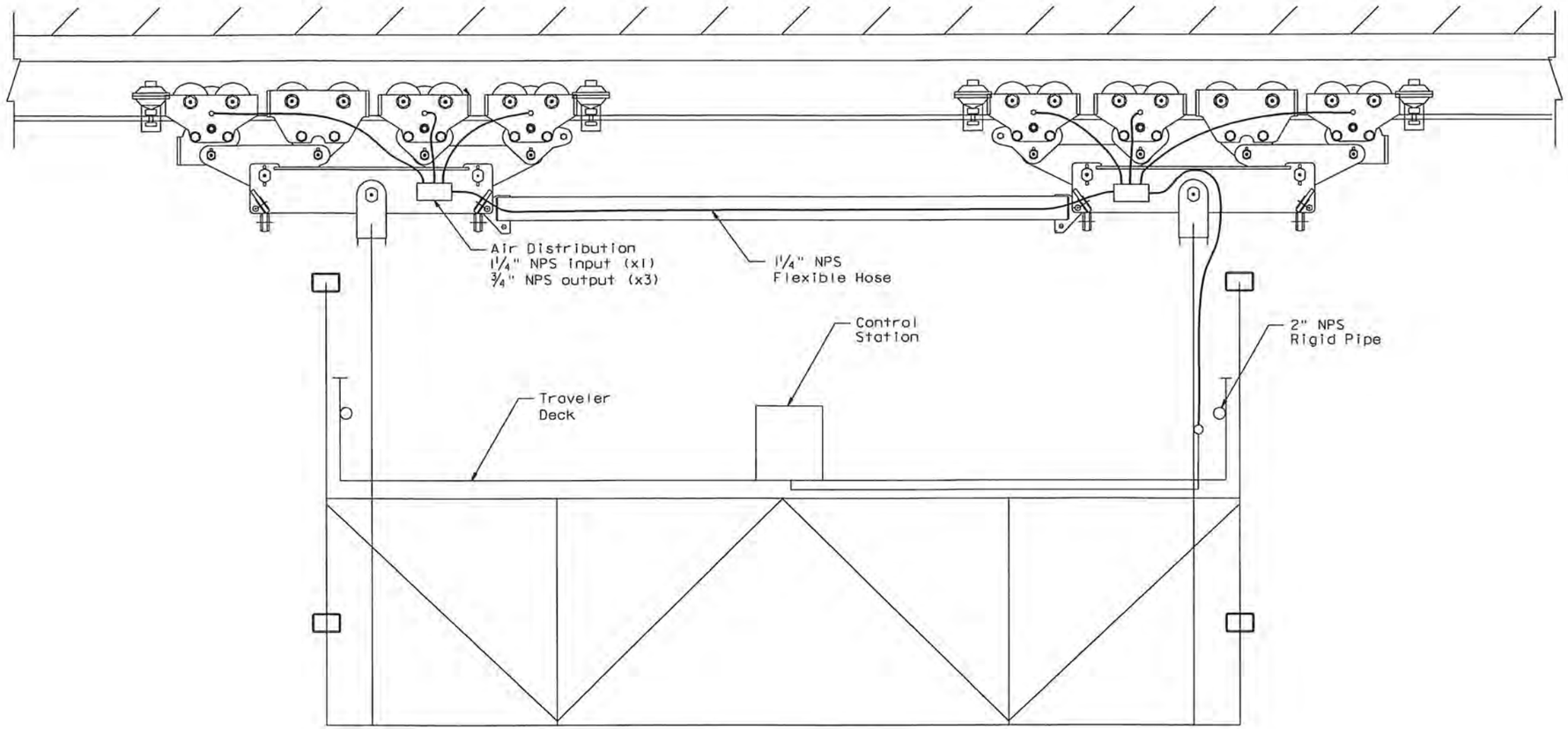

TYPICAL FLEXIBLE HOSE LAYOUT

NTS

CONTRACT CHANGE ORDER NO. 24S1
SHEET 86 OF 120

REQUESTS FOR INFORMATION NOT ADDRESSED IN THIS CCO REMAIN IN FORCE

ALL DIMENSIONS ARE IN MILLIMETERS UNLESS OTHERWISE SHOWN

R. Vallizadeh/V. Toon/Y.L./W.L./F.C.
DESIGN OVERSIGHT
Roya Vallizadeh / Vong Toon / Y. Liu
SIGN OFF DATE 06/19/09

MARK	DATE	DESCRIPTIONS	BY	CH'D	CCO#
0	06/19/09	TRAVELER MODIFICATIONS	RH	TH	24S1

REVISIONS

DESIGN	BY R. Henriksen	CHECKED	J. Otter
DETAILS	BY T. Ho	CHECKED	A. Sanjines
QUANTITIES	BY R. Henriksen	CHECKED	J. Otter

PREPARED FOR THE STATE OF CALIFORNIA DEPARTMENT OF TRANSPORTATION

R. Manzanarez
PROJECT ENGINEER

BRIDGE NO. 34-0006L/R
KILOMETER POST 13.2/13.9

SAN FRANCISCO OAKLAND BAY BRIDGE
EAST SPAN SEISMIC SAFETY PROJECT
SELF-ANCHORED SUSPENSION BRIDGE
(SUPERSTRUCTURE & TOWER)

TRAVELER FLEXIBLE HOSE LAYOUT

Rev. Date: 5-18-98

ORIGINAL SCALE IN MILLIMETERS FOR REDUCED PLANS 0 10 20 30 40 50 60 70 80 90 100

CU 04
EA 0120F1

DISREGARD PRINTS BEARING EARLIER REVISION DATES → 06/15/09

REVISION DATES (PRELIMINARY STAGE ONLY)

SHEET 717S2 OF

FILE => I:\bb\04-012001\sas\contract plans and cco\cco\cco*24s1\2-revision 06-19-09\dgn\aktrv120c.dgn

100 % PS&E

USERNAME => dwinrow DATE PLOTTED => 17 JUN 2009 TIME PLOTTED => 11:09:46

DIST.	COUNTY	ROUTE	KILOMETER POST TOTAL PROJECT	SHEET NO.	TOTAL SHEETS
04	SF	80	13.2/13.9	1135R3	1204

Caltrans Metric

REGISTERED ENGINEER - CIVIL

12-19-08

PLANS APPROVAL DATE

REGISTERED PROFESSIONAL ENGINEER Roupen Donikian No. C 56519 Exp. 06/30/09 STATE OF CALIFORNIA

The State of California or its officers or agents shall not be responsible for the accuracy or completeness of electronic copies of this plan sheet.

T.Y. LIN / MOFFATT & NICHOL
825 BATTERY STREET
SAN FRANCISCO, CA 94111

Caltrans now has a web site! To get to the web site, go to: http://www.dot.ca.gov

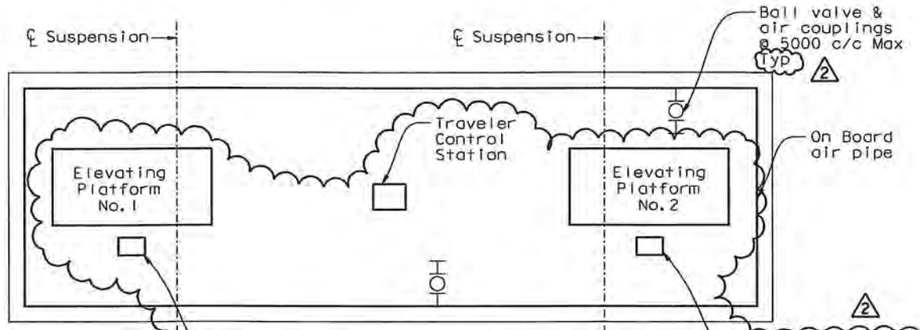

NOTES:

2 For location of Traveler Control Stations see Assembly sheets for each traveler

KEY PLAN SCHEMATIC

PARTS FOR ELEVATING PLATFORM CONTROL

Part	Description	Size	Quantity/Traveler
L5-L6	Elevator Platform control Limit Valve	1/4"	1 or 2
6A	Shuttle Valve: Will be actuated by either L5 or L6 as necessary.	1/4"	0 or 1 3
31	Pressure Regulator set to limit pressure to 760kPag (110 psig)	1 1/4"	1 or 2
32	Full flow throttle and reverse valve for the linear actuator air motors with built-in emergency stop button. Deadman operation. Use same valve type as is used for trolley throttles.	1 1/4"	1 or 2
33	Linear Actuator Air Motor. Max air consumption 183 scfm per motor		1 or 2
34	Exhaust Choke Throttling Valve	To suit motor port	1 or 2
35	Silencer	To suit motor port	1 or 2
36	Inline Lubricator: One Required at each air motor inlet.	3/4"	2 or 4
37	NOT USED		3
38	Piloted Safety Valve to allow flow only when Pedal Valve 40 is actuated. - Poppet Valve 3	1 1/4"	1 or 2
39	NOT USED		3
40	Pedal Control Valve, located at the Elevated Platform Control Station. Operation: 1. To lift Elevated Platform, Pedal must be held depressed while operating the Throttle Valve. (32)	1/4"	1 or 2
41	3-Way Manual Diversion Ball Valve with Latch-Lock Lever and Nut to allow isolation of Elevating Platforms for maintenance or repair without having to shut down the other air systems on the Traveler 3	1 1/4"	1

2 REVISION 2 SUPERSEDES REVISION 1

TRAVELER AIR SYSTEM NOTES:

1. All double check valves shall be installed horizontally. 2
2. All vents without silencers unless noted otherwise shall have a minimum of 300 mm of pipe and terminate with a screened downturned elbow. 2
3. Flexible hose (not to exceed 750 mm in length unless otherwise noted or shown) may be used for final connections to equipment. 2 2 2
4. All pipe sizes are typical for similar locations.
5. On board rigid pipe to be SCHED 40. 2
6. Provide support to 2" pipe within 150 mm of each pipe hose connection and at 1800 intervals maximum.
7. Provide downturned elbow and reducer as required at each equipment connection.
8. Provide sufficient flexible connection hose to accommodate traveler movement (12,000 mm length). 2
9. Mount throttle and whistle valves so as to be accessible by hand. 2
10. Mount main system pilot valves (Dead Man Switch) so as to be operated by foot.
11. Fabricator to design and provide a steel framed, plywood sheathed control console. Provide weather cover for all controls.
12. Traveler operating speed 6.1 m/min (20 fpm) fully loaded going up grade.
13. Anticipated trolley air consumption at full speed is 33 scfm per motorized trolley.
14. Pneumatic schematics illustrate the principles of the pneumatic systems. System manufacturer is to review pneumatic schematics; carry out detailed layout of the system; make any detailed modifications necessary to ensure the proper operation of the systems. 3
15. For functional description of components and other requirements, see specification.
16. Elevating platform drives and actuators are designed to operate with air pressure in the range from 490 to 690 kPa (70 to 100 psig). Provide pressure relief valves to avoid supply of excessive pressure to the drive motors so as to avoid excessive motor stall-out torque.
17. SAS EB & WB Travelers have 4 suspension systems (12 motors) and one elevating platform each.
18. E2/E3 EB & WB Travelers have 8 suspension systems (24 motors) & two elevating platforms each. These travelers change suspension systems when Hinge A is crossed.
19. Quick disconnects items 11 & 12 are only on the E2/E3 Travelers. SAS Travelers are to be piped with fixed connections.
20. Main system pilot valves (Item (5)) - 1 required for operator facing east and 1 required for operator facing west.

R. Henriksen REGISTERED PROFESSIONAL ENGINEER No. M 029816 Exp. 06/30/10 MECHANICAL STATE OF CALIFORNIA

FOR REVISIONS ONLY

CONTRACT CHANGE ORDER NO. 2451
SHEET 87 OF 120

REQUESTS FOR INFORMATION NOT ADDRESSED IN THIS CCO REMAIN IN FORCE

MARK	DATE	DESCRIPTIONS	BY	CH'D	CCO#
3	02/12/10	TRAVELER MODIFICATIONS	RH	AS	2451
2	08/21/09	TRAVELER MODIFICATIONS	RH	AS	2451
1	07/20/07	RAIL CHANGE & MISCELLANEOUS DETAILS	RD	NV	24

REVISIONS

R. Vollzadeh/V. Toon/Y.L./W.L./F.C.
DESIGN OVERSIGHT
SIGN OFF DATE 02/12/10

Rev. Date: 5-18-98

DESIGN BY R. Scott CHECKED R. Henriksen
DETAILS BY Z. Istre CHECKED J. Otter
QUANTITIES BY R. Scott CHECKED T. Ho

PREPARED FOR THE STATE OF CALIFORNIA DEPARTMENT OF TRANSPORTATION

ALL DIMENSIONS ARE IN MILLIMETERS UNLESS OTHERWISE SHOWN

ORIGINAL SCALE IN MILLIMETERS FOR REDUCED PLANS 0 10 20 30 40 50 60 70 80 90 100

R. Manzanarez
PROJECT ENGINEER

BRIDGE NO. 34-0006L/R
KILOMETER POST 13.2/13.9

CU 04
EA 0120F1

DISREGARD PRINTS BEARING EARLIER REVISION DATES 12/19/08

SAN FRANCISCO OAKLAND BAY BRIDGE
EAST SPAN SEISMIC SAFETY PROJECT
SELF-ANCHORED SUSPENSION BRIDGE
(SUPERSTRUCTURE & TOWER)

TRAVELER AIR SYSTEM-02A

SHEET 718R3 OF

FILE => I:\bb\04-012001\sas\contract plans and cco\cco\cco*2451\5-revision 02-12-10\dgn\aktrv121a.dgn

100% PS&E

USERNAME => arivera DATE PLOTTED => 19 FEB 2010 TIME PLOTTED => 09:16:48

DIST.	COUNTY	ROUTE	KILOMETER POST TOTAL PROJECT	SHEET NO.	TOTAL SHEETS
04	SF	80	13.2/13.9	1135SIR1	1204

REGISTERED ENGINEER - CIVIL
06-19-09
PLANS APPROVAL DATE

REGISTERED PROFESSIONAL ENGINEER R. Henriksen No. M 029816 Exp. 06/30/10 MECHANICAL STATE OF CALIFORNIA

The State of California or its officers or agents shall not be responsible for the accuracy or completeness of electronic copies of this plan sheet.

T.Y. LIN / MOFFATT & NICHOL
825 BATTERY STREET
SAN FRANCISCO, CA 94111

Caltrans now has a web site! To get to the web site, go to: http://www.dot.ca.gov

Safety Note - Platform Limit Switches

This circuit prevents movement of the traveler at any time except when the elevating platforms are fully down. In order to pass the pier with the SAS travelers (when elevating platform must be partially raised), personnel on the traveler platform must temporarily over-ride the elevating platform limit switch.

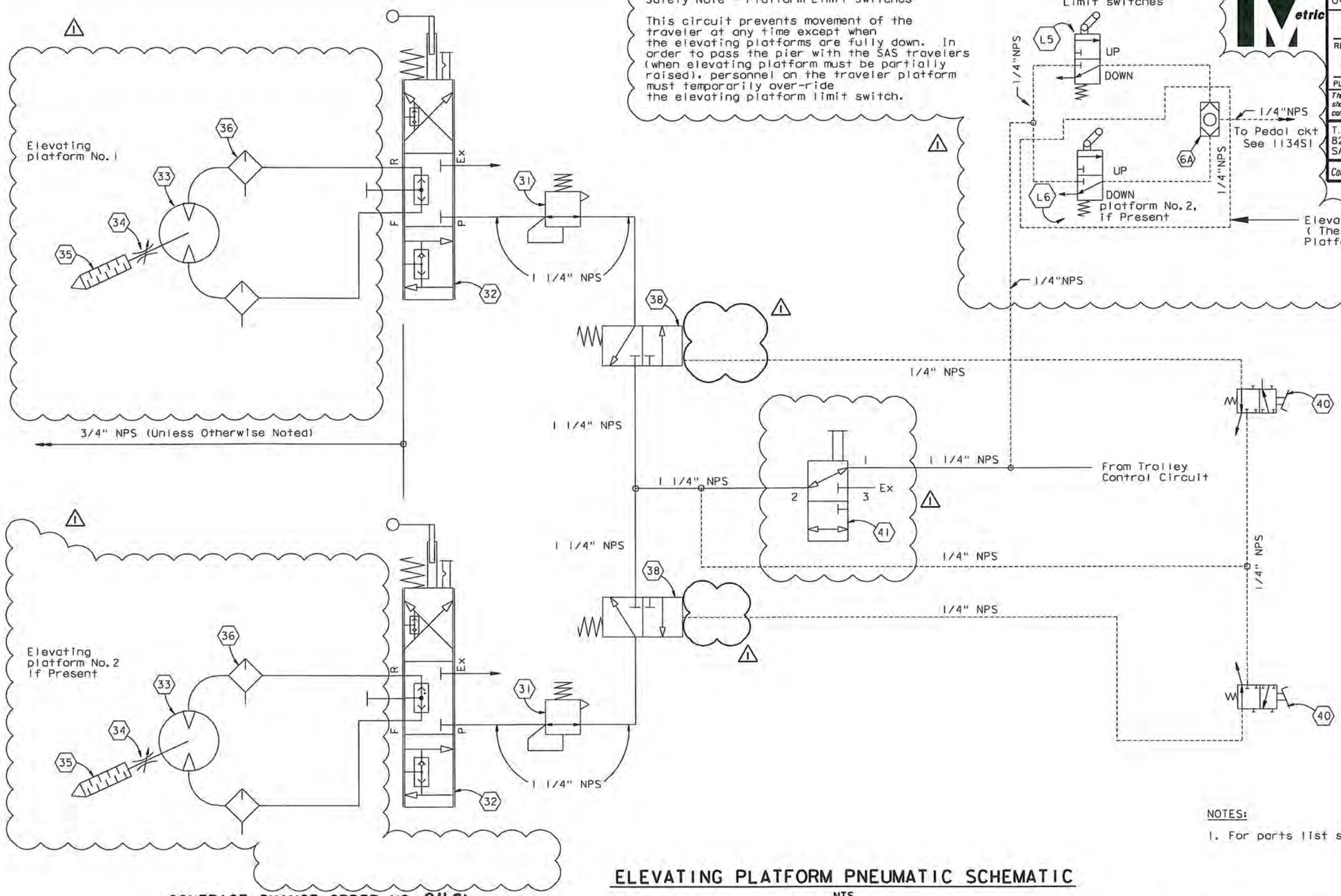

NOTES:

1. For parts list see "Traveler Air System - 02A" sheet.

ELEVATING PLATFORM PNEUMATIC SCHEMATIC

NTS

CONTRACT CHANGE ORDER NO. 2451
SHEET 88 OF 120

REQUESTS FOR INFORMATION NOT ADDRESSED IN THIS CCO REMAIN IN FORCE

ALL DIMENSIONS ARE IN MILLIMETERS UNLESS OTHERWISE SHOWN

MARK	DATE	DESCRIPTIONS	BY	CH'D	CCO#
1	02/12/10	TRAVELER MODIFICATIONS	RH	TH	2451
0	08/21/09	TRAVELER MODIFICATIONS	RH	TH	2451

REVISIONS

R. Valizadeh/V. Toan/Y.L./W.L./F.C.
DESIGN OVERSIGHT
SIGN OFF DATE 02/12/10

Rev. Date: 5-18-98

	BY	CHECKED
DESIGN	R. Scott	R. Henriksen
DETAILS	Z. Istre	J. Otter
QUANTITIES	R. Scott	T. Ho

PREPARED FOR THE STATE OF CALIFORNIA DEPARTMENT OF TRANSPORTATION

R. Manzanarez
PROJECT ENGINEER

BRIDGE NO. 34-0006L/R
KILOMETER POST 13.2/13.9

SAN FRANCISCO OAKLAND BAY BRIDGE
EAST SPAN SEISMIC SAFETY PROJECT
SELF-ANCHORED SUSPENSION BRIDGE (SUPERSTRUCTURE & TOWER)

TRAVELER AIR SYSTEM-02B

ORIGINAL SCALE IN MILLIMETERS FOR REDUCED PLANS 0 10 20 30 40 50 60 70 80 90 100

CU 04
EA 0120F1

DISREGARD PRINTS BEARING EARLIER REVISION DATES → 06/19/09

REVISION DATES (PRELIMINARY STAGE ONLY)

SHEET 718SIR1 OF

FILE => I:\bb\04-012001\sas\contract plans and cco\cco\cco*2451\5-revision 02-12-10\dgn\aktrv121b.dgn

100 % PS&E

USERNAME => arivera DATE PLOTTED => 19 FEB 2010 TIME PLOTTED => 09:18:46

DIST.	COUNTY	ROUTE	KILOMETER POST TOTAL PROJECT	SHEET NO.	TOTAL SHEETS
04	SF	80	13.2/13.9	113552	1204

REGISTERED ENGINEER - CIVIL

06-19-09

PLANS APPROVAL DATE

REGISTERED PROFESSIONAL ENGINEER R. Henriksen No. M 029816 Exp. 06/30/10 MECHANICAL STATE OF CALIFORNIA

The State of California or its officers or agents shall not be responsible for the accuracy or completeness of electronic copies of this plan sheet.

T.Y. LIN / MOFFATT & NICHOL
825 BATTERY STREET
SAN FRANCISCO, CA 94111

Caltrans now has a web site! To get to the web site, go to: http://www.dot.ca.gov

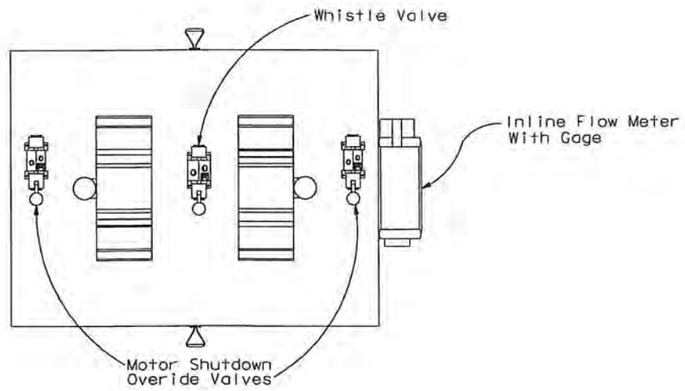

PLAN VIEW

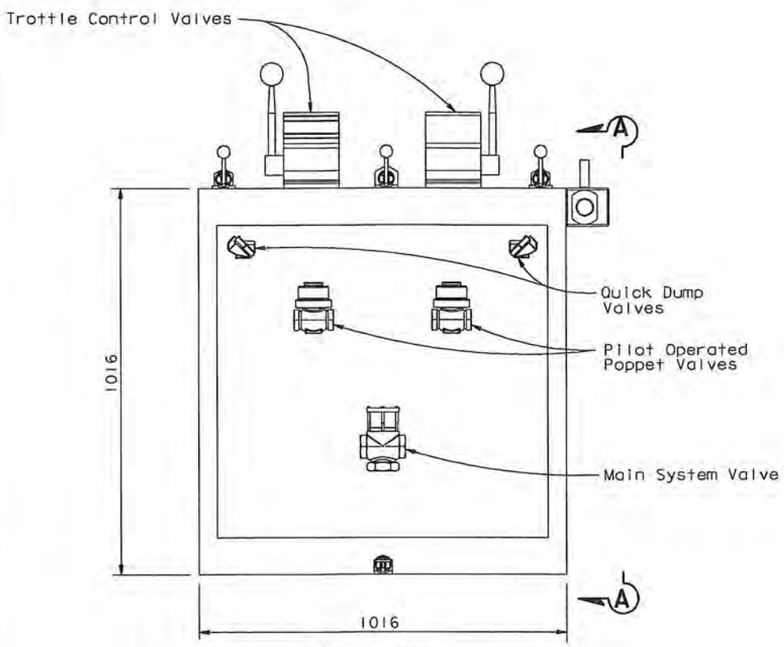

ELEVATION

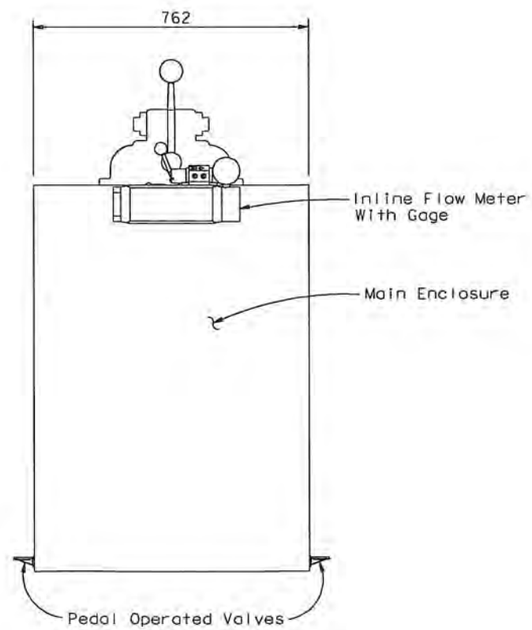

VIEW A-A

VALVE NUMBER	DESCRIPTION	QTY.
N/A	Main Enclosure	1
1N and 1S	Throttle Control Valve	2
2N and 2S	Pilot Operated Poppet Valve	2
3	Main System Valve	1
4	Quick Dump Valve	2
5	Pedal Operated Valve	2
15	Whistle Valve	1
26	Motor Shutdown Overide Valve	2
28	Inline Flow Meter With Gage	1

AIR SYSTEM CONTROL LAYOUT

NTS

CONTRACT CHANGE ORDER NO. 24S1
SHEET 89 OF 120

REQUESTS FOR INFORMATION NOT ADDRESSED IN THIS CCO REMAIN IN FORCE

ALL DIMENSIONS ARE IN MILLIMETERS UNLESS OTHERWISE SHOWN

R. Valizadeh/V. Toan/Y.L./W.L./F.C.
DESIGN OVERSIGHT
Y. Liu
SIGN OFF DATE 06/19/09

MARK	DATE	DESCRIPTIONS	BY	CH'D	CCO#
0	06/19/09	TRAVELER MODIFICATIONS	RH	TH	24S1

REVISIONS

	BY	CHECKED
DESIGN	R. Scott	R. Henriksen
DETAILS	Z. Istre	J. Otter
QUANTITIES	R. Scott	T. Ho

PREPARED FOR THE STATE OF CALIFORNIA DEPARTMENT OF TRANSPORTATION

R. Manzanarez
PROJECT ENGINEER

BRIDGE NO. 34-0006L/R
KILOMETER POST 13.2/13.9

SAN FRANCISCO OAKLAND BAY BRIDGE
EAST SPAN SEISMIC SAFETY PROJECT
SELF-ANCHORED SUSPENSION BRIDGE
(SUPERSTRUCTURE & TOWER)

TRAVELER CONTROL LAYOUT

Rev. Date: 5-18-98

ORIGINAL SCALE IN MILLIMETERS FOR REDUCED PLANS 0 10 20 30 40 50 60 70 80 90 100

CU 04
EA 0120F1

DISREGARD PRINTS BEARING EARLIER REVISION DATES

REVISION DATES (PRELIMINARY STAGE ONLY) 06/19/09

SHEET 718S2 OF

FILE => I:\bb\04-012001\sas\contract plans and cco\cco\cco#24s1\2-revision 06-19-09\dgn\aktrv121c.dgn

100 % PS&E

USERNAME => dwinrow DATE PLOTTED => 17 JUN 2009 TIME PLOTTED => 11:12:33

DIST.	COUNTY	ROUTE	KILOMETER POST TOTAL PROJECT	SHEET NO.	TOTAL SHEETS
04	SF	80	13.2/13.9	1140R1	1204

Caltrans Metric

REGISTERED ENGINEER - CIVIL

12-6-04
PLANS APPROVAL DATE

REGISTERED PROFESSIONAL ENGINEER Rafael Manzanarez No. C 36842 Exp. 6/30/12 CIVIL STATE OF CALIFORNIA

The State of California or its officers or agents shall not be responsible for the accuracy or completeness of electronic copies of this plan sheet.

T.Y. LIN / MOFFATT & NICHOL
825 BATTERY STREET
SAN FRANCISCO, CA 94111

Caltrans now has a web site! To get to the web site, go to: http://www.dot.ca.gov

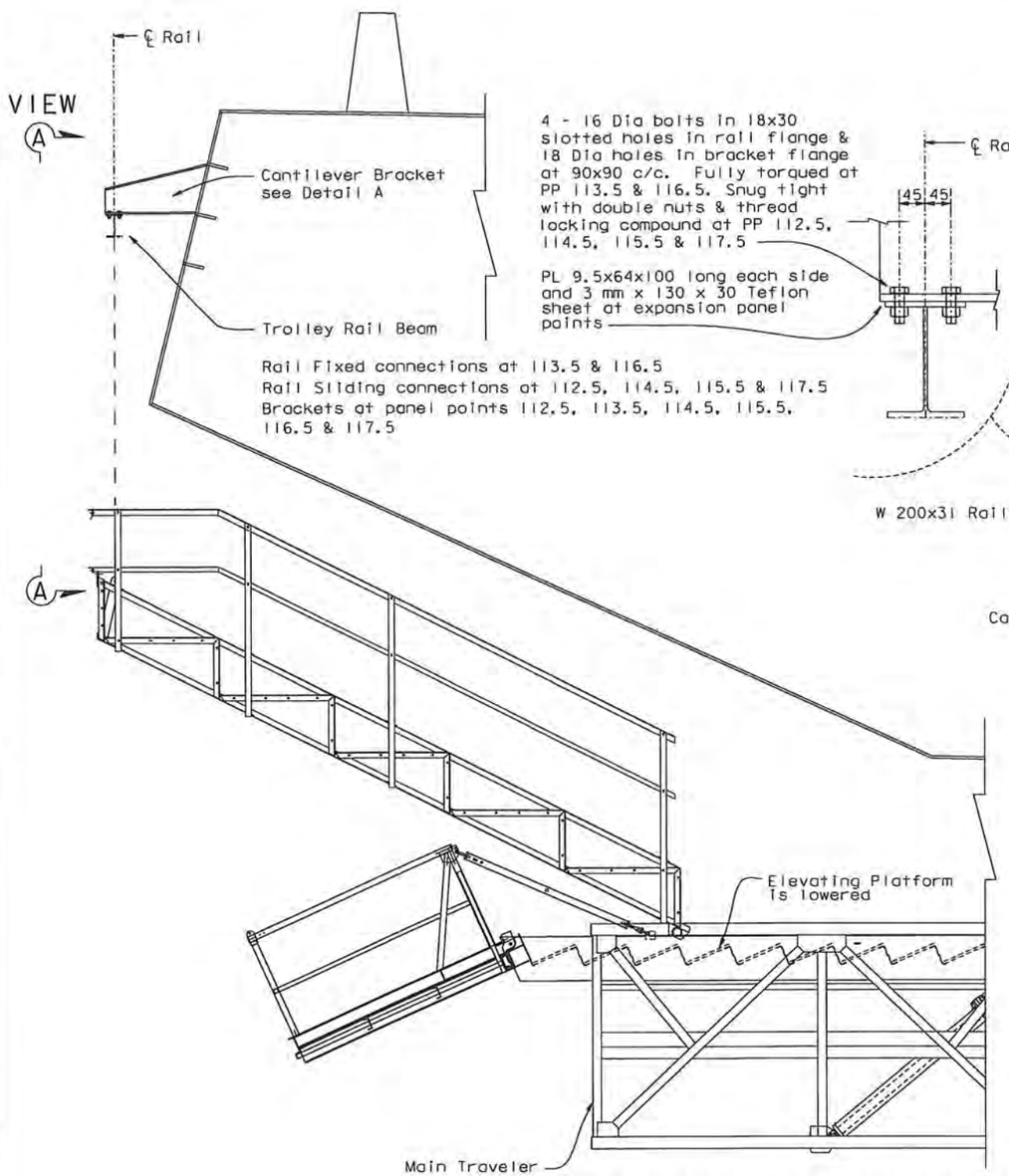

Rail Fixed connections at 113.5 & 116.5
Rail Sliding connections at 112.5, 114.5, 115.5 & 117.5
Brackets at panel points 112.5, 113.5, 114.5, 115.5, 116.5 & 117.5

SUPPLEMENTARY PLATFORM ASSEMBLED SECTION

SHOWN AT PP 118

1:25

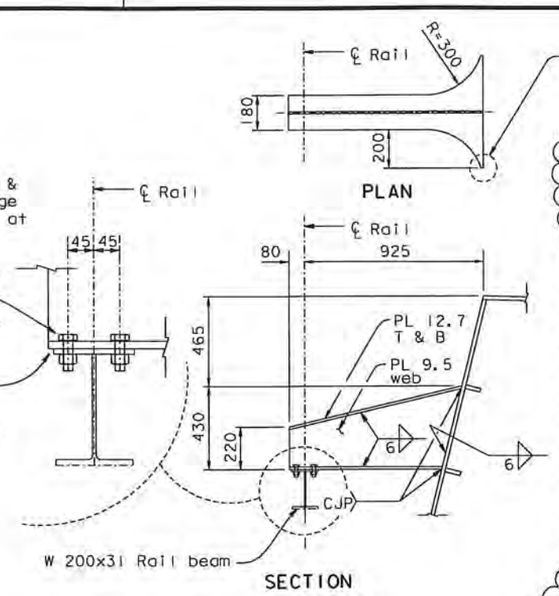

DETAIL A

1:5

Cantilever at PP 112.5 to 117.5

Terminate flanges as per typical stiffener termination detail in "Typical Floorbeam No. 4" sheet.

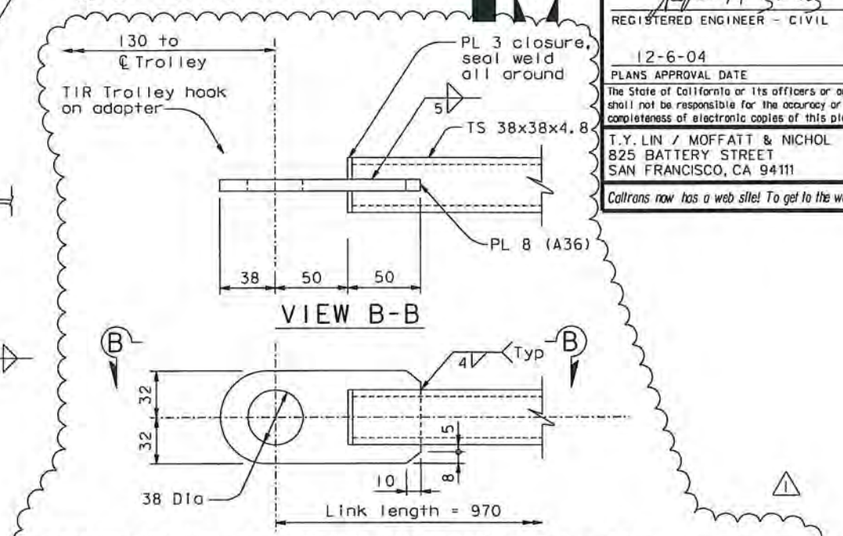

SUPPLEMENTARY PLATFORM TROLLEY LINK (See Note 14)

1:2

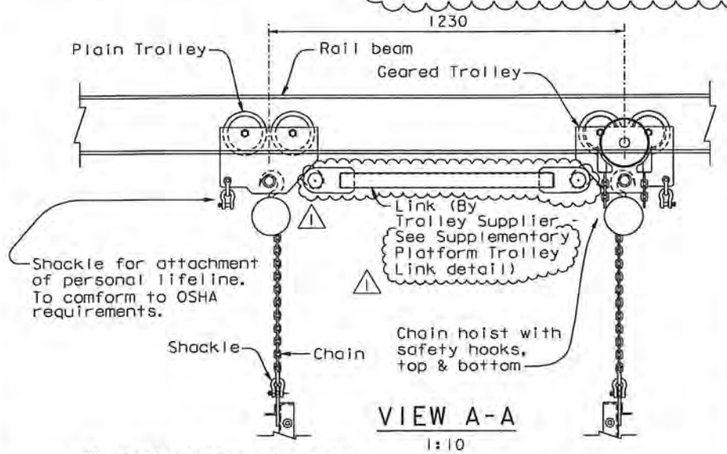

VIEW A-A

1:10

NOTES:

1. All personnel on this platform are to wear full body harness & to be tied off to an approved lifeline anchorage.
2. For details of Supplementary Platform Structure see "Traveler Supplementary Platform -02 to 05" sheets.
3. These sheets detail the Supplementary Platform required for the SAS EB Traveler. Fabricator is to detail the Supplementary Platform for the SAS-WB Traveler similarly except that slope is to be altered to conform to Box Soffit slope on WB.
4. All platform components to be hot dip galvanized.
5. This item will be stored dis-assembled on the Traveler. It will be assembled only when required for use.
6. Provide a durable plastic container for all small loose parts.
7. Design Live Load of this platform is 1.2 kPa (25 psf) plus 200 kg point load. Total Load on platform is not to exceed 1000 kg.
8. Assemble platform with 12.7 Dia galvanized A325 bolts. Wrench tight only.
9. All Trolleys to have drop stops.
10. Trolleys, chain hoist & shackles to be minimum 1.5 ton (13.5 kN) capacity. Trolleys & hoist to be capable of supporting 5.3 kN with a minimum factor of safety of 6.0. Manufacturer is to certify the ultimate load capacity to be 32 kN or greater per unit.
11. Trolleys & components to be stored in a water tight container (supplied by fabricator) when not in use.
12. Installation procedure.
    a) Install trolleys, link & chain falls working from elevating platform. Install at PP 112.5.
    b) Lower elevating platform.
    c) Assemble the supplementary platform on the elevating platform.
    d) Raise the supplementary platform using the chain hoists.
13. TT Denotes square weld with a minimum depth of fusion of 3.5 mm.
14. Verify actual dimensions of equipment supplied by Ingersoll Rand and adjust dimensions as required.

ALL DIMENSIONS ARE IN MILLIMETERS UNLESS OTHERWISE SHOWN

CONTRACT CHANGE ORDER NO. 24S1
SHEET 90 OF 120

REQUESTS FOR INFORMATION NOT ADDRESSED IN THIS CCO REMAIN IN FORCE

MARK	DATE	DESCRIPTIONS	BY	CH'D	CCO#
1	07/30/10	TRAVELER MODIFICATIONS	JO	RM	24S1

REVISIONS

R. Valizadeh/V. Toan/Y.L./W.L./F.C.
DESIGN OVERSIGHT
SIGN OFF DATE 07/30/10

Rev. Date: 5-18-98

DESIGN BY J. Otter CHECKED R. Manzanarez
DETAILS BY J. Otter CHECKED J. Leventini
QUANTITIES BY J. Otter CHECKED J. Leventini

PREPARED FOR THE STATE OF CALIFORNIA DEPARTMENT OF TRANSPORTATION

R. Manzanarez
PROJECT ENGINEER

BRIDGE NO. 34-0006L/R
KILOMETER POST 13.2/13.9

SAN FRANCISCO OAKLAND BAY BRIDGE
EAST SPAN SEISMIC SAFETY PROJECT
SELF-ANCHORED SUSPENSION BRIDGE
(SUPERSTRUCTURE & TOWER)

TRAVELER SUPPLEMENTARY PLATFORM-01

ORIGINAL SCALE IN MILLIMETERS FOR REDUCED PLANS 0 10 20 30 40 50 60 70 80 90 100

CU 04
EA 0120F1

DISREGARD PRINTS BEARING EARLIER REVISION DATES 09/25/02 01/20/02 12/13/02

SHEET 723R1 OF

FILE => I:\bb\04-01200\sas\contract plans and cco\cco\cco#24s1\9-update 07-30-10\dgn\aktrvl25a.dgn

100 % PS&E

USERNAME => dwinrow DATE PLOTTED => 03 AUG 2010 TIME PLOTTED => 11:49:14

DIST.	COUNTY	ROUTE	KILOMETER POST TOTAL PROJECT	SHEET NO.	TOTAL SHEETS
04	SF	80	13.2/13.9	1145R2	1204

Caltrans Metric

REGISTERED ENGINEER - CIVIL

12-6-04

PLANS APPROVAL DATE

REGISTERED PROFESSIONAL ENGINEER Rafael Manzanarez No. C 36842 Exp. 06/30/10 CIVIL STATE OF CALIFORNIA

The State of California or its officers or agents shall not be responsible for the accuracy or completeness of electronic copies of this plan sheet.

T.Y. LIN / MOFFATT & NICHOL
825 BATTERY STREET
SAN FRANCISCO, CA 94111

Caltrans now has a web site! To get to the web site, go to: http://www.dot.ca.gov

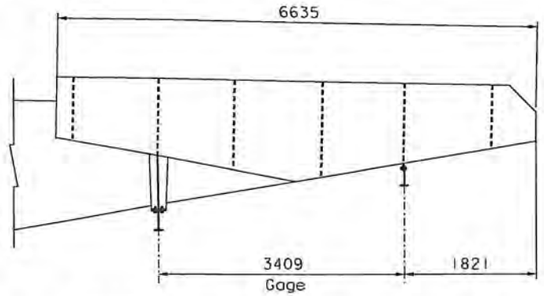

RAIL LOCATION BETWEEN PP 117 & PP 121

1:40

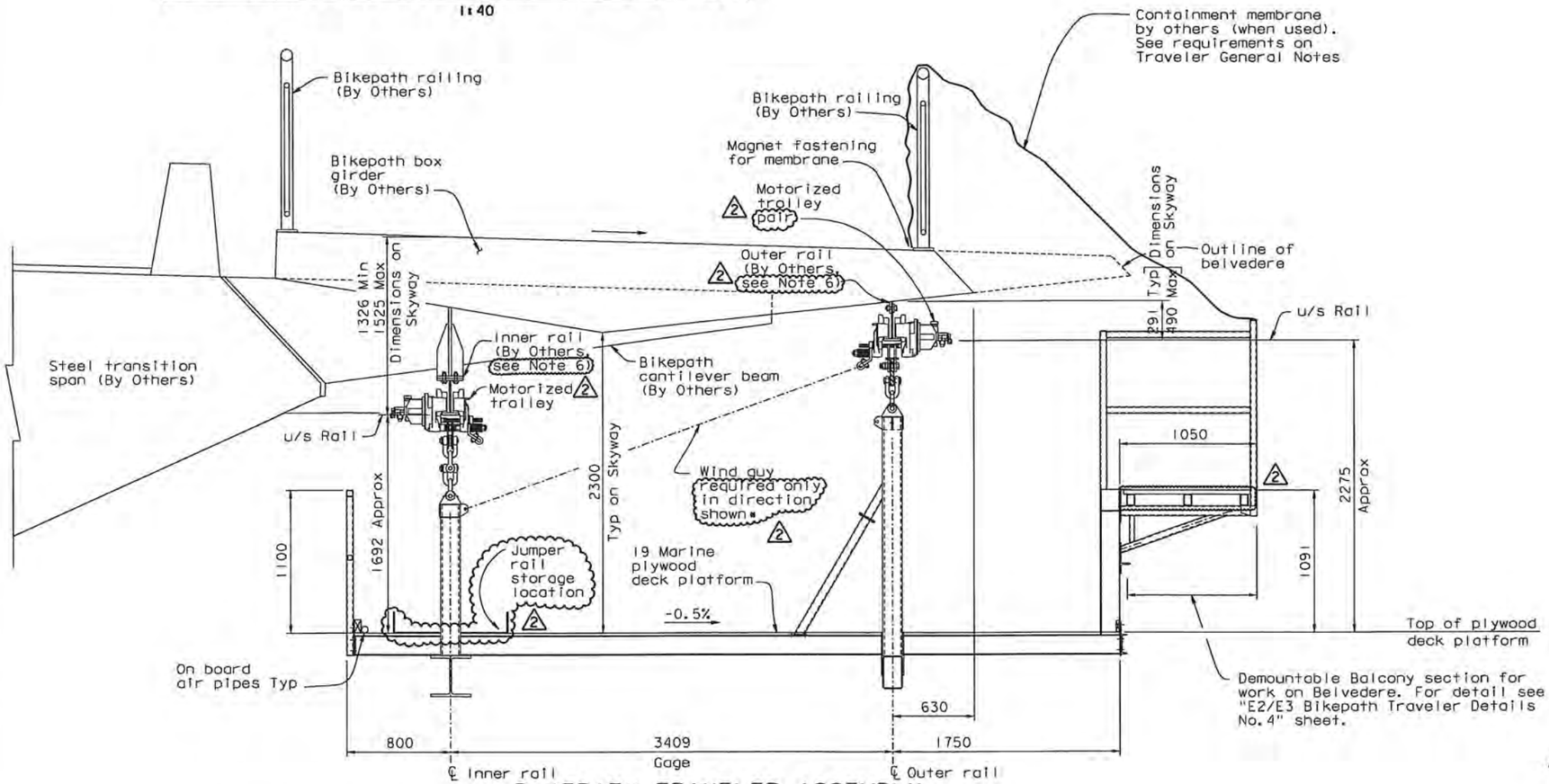

BIKEPATH TRAVELER ASSEMBLY

1:20

(Shown on Skyway section)

NOTES:

1. For bikepath cantilever beams and box girders, see "Bikepath Details" sheets.
2. Design live load - 0.72 kPa (15 psf) uniformly distributed load plus a single moving load of 4.5 kN (450 kg.) plus 7 kN of stored jumper rails. Max total live load on platform not to exceed 47 kN (4785 kg.) includes jumper rails.
3. Provide an engraved stainless steel sign affixed to the platform with text as in note 2 above.
4. For General notes & design loadings see "Traveler General Notes" sheets.
5. Store only 2 jumper rails of each type on the platform.
6. Rail by others includes the Skyway transition span rail only. Elsewhere, supply and installation of rail is included in this contract.

2 REVISION 2 SUPERSEDES REVISION 1

CONTRACT CHANGE ORDER NO. 24S1
SHEET 91 OF 120

REQUESTS FOR INFORMATION NOT ADDRESSED IN THIS CCO REMAIN IN FORCE

* Wind guy required when containment membrane is installed. Use Tirfor winches or equivalent at each motorized trolley with Safe Working Load of 10 kN (1000 kg) Min/Tirfor.

2 Guy only in direction shown.

ALL DIMENSIONS ARE IN MILLIMETERS UNLESS OTHERWISE SHOWN

100 % PS&E

R. Valizadeh/V. Toan/Y.L./W.L./F.C.
DESIGN OVERSIGHT
Roger Valizadeh / Vong P. Toan / Y. Liu
SIGN OFF DATE 06/19/09

MARK	DATE	DESCRIPTIONS	BY	CH'D	CCO#
2	06/19/09	TRAVELER MODIFICATIONS	RM	AS	24S1
1	07/20/07	RAIL CHANGE & MISCELLANEOUS DETAILS	RM	NV	24

REVISIONS

	BY	CHECKED
DESIGN	J. Otter	R. Manzanarez
DETAILS	J. Otter	J. Leventini
QUANTITIES	J. Otter	J. Leventini

PREPARED FOR THE STATE OF CALIFORNIA DEPARTMENT OF TRANSPORTATION

R. Manzanarez
PROJECT ENGINEER

BRIDGE NO. 34-0006L/R
KILOMETER POST 13.2/13.9

SAN FRANCISCO OAKLAND BAY BRIDGE
EAST SPAN SEISMIC SAFETY PROJECT
SELF-ANCHORED SUSPENSION BRIDGE
(SUPERSTRUCTURE & TOWER)

E2/E3 BIKEPATH TRAVELER ASSEMBLY

Rev. Date: 5-18-98

ORIGINAL SCALE IN MILLIMETERS FOR REDUCED PLANS 0 10 20 30 40 50 60 70 80 90 100

CU 04
EA 0120F1

DISREGARD PRINTS BEARING EARLIER REVISION DATES

REVISION DATES (PRELIMINARY STAGE ONLY) 04/19/02 07/01/02 12/19/02

SHEET 728R2 OF

FILE => I:\bb\04-0120I\sas\contract plans and cco\cco\cco#24s1\2-revision 06-19-09\dgn\aktrv126.dgn

USERNAME => dwinrow DATE PLOTTED => 17 JUN 2009 TIME PLOTTED => 11:13:55

DIST.	COUNTY	ROUTE	KILOMETER POST TOTAL PROJECT	SHEET NO.	TOTAL SHEETS
04	SF	80	13.2/13.9	1146R3	1204

REGISTERED ENGINEER - CIVIL

12-6-04
PLANS APPROVAL DATE

REGISTERED PROFESSIONAL ENGINEER Rafael Manzanarez No. C 36842 Exp. 6/30/10 CIVIL STATE OF CALIFORNIA

The State of California or its officers or agents shall not be responsible for the accuracy or completeness of electronic copies of this plan sheet.

T.Y. LIN / MOFFATT & NICHOL
825 BATTERY STREET
SAN FRANCISCO, CA 94111

Caltrans now has a web site! To get to the web site, go to: http://www.dot.ca.gov

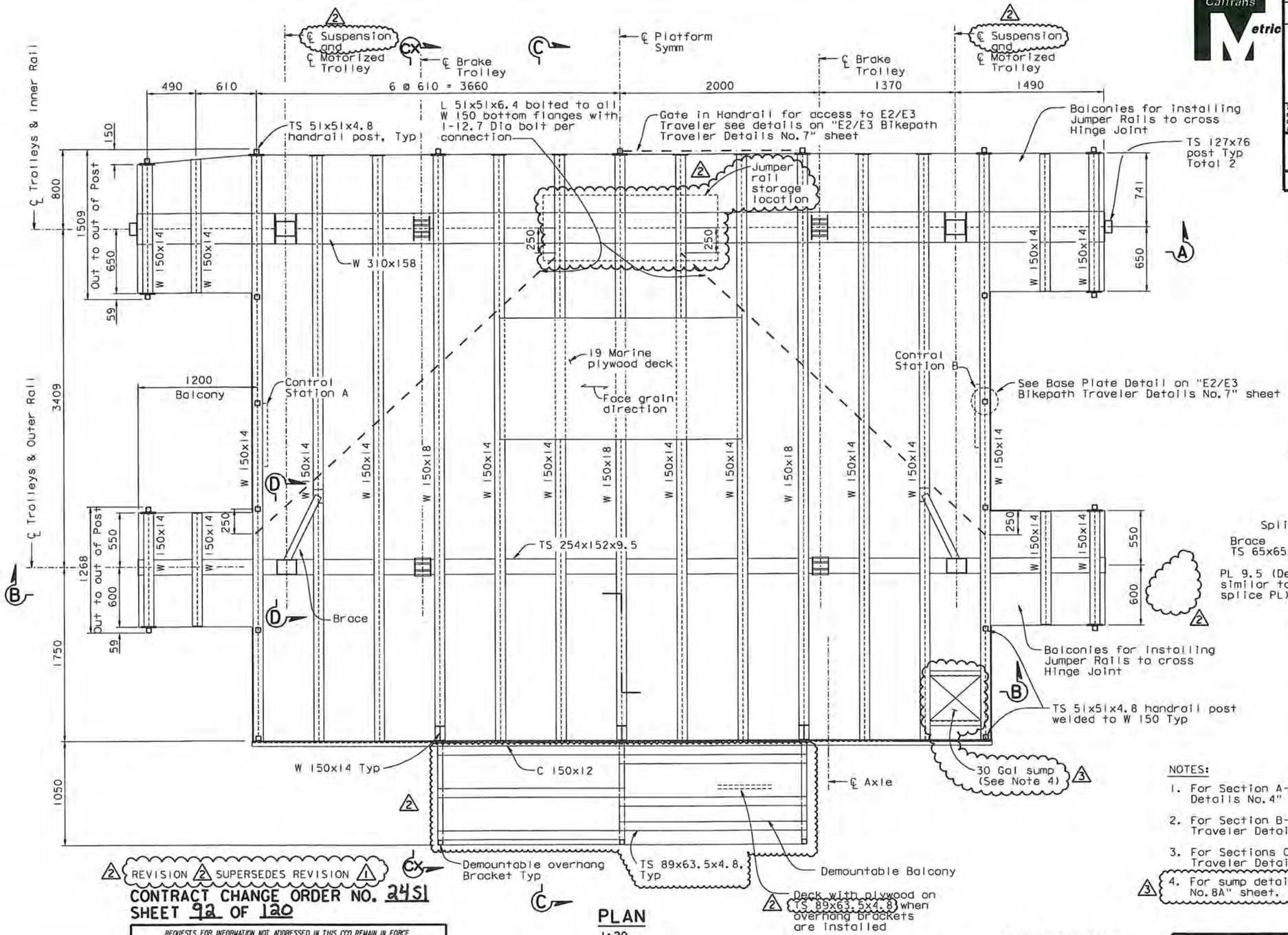

PLAN
1:20

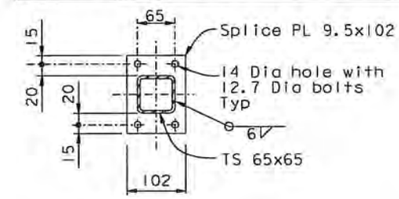

SPLICE PLATE

SECTION E-E
1:5

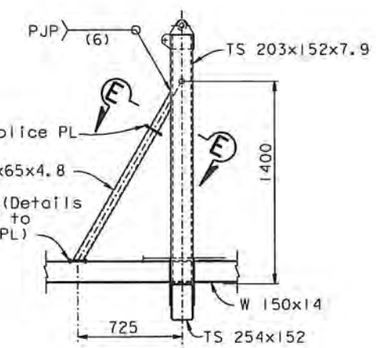

BRACE DETAILS

SECTION D-D
1:5

NOTES:

1. For Section A-A see "E2/E3 Bikepath Traveler Details No.4" sheet.
2. For Section B-B see "E2/E3 Bikepath Traveler Details No.3" sheet.
3. For Sections C-C & Cx-Cx see "E2/E3 Bikepath Traveler Details No.4" sheet.
4. For sump details, see "Traveler Common Details No.8A" sheet.

REVISION 2 SUPERSEDES REVISION 1

CONTRACT CHANGE ORDER NO. 2451
SHEET 92 OF 120

REQUESTS FOR INFORMATION NOT ADDRESSED IN THIS CCO REMAIN IN FORCE

MARK	DATE	DESCRIPTIONS	BY	CH'D	CCO#
3	02/12/10	TRAVELER MODIFICATIONS	RM	AS	2451
2	06/19/09	TRAVELER MODIFICATIONS	RM	AS	2451
1	07/20/07	RAIL CHANGE & MISCELLANEOUS DETAILS	RM	NV	24

REVISIONS

R. Vallizadeh/V. Toan/Y.L./W.L./F.C.
DESIGN OVERSIGHT
SIGN OFF DATE 02/12/10

Rev. Date: 5-18-98

	BY	CHECKED
DESIGN	J. Otter	R. Manzanarez
DETAILS	J. Otter	J. Leventini
QUANTITIES	J. Otter	J. Leventini

ORIGINAL SCALE IN MILLIMETERS FOR REDUCED PLANS 0 10 20 30 40 50 60 70 80 90 100

PREPARED FOR THE STATE OF CALIFORNIA DEPARTMENT OF TRANSPORTATION

CU 04
EA 0120F1

ALL DIMENSIONS ARE IN MILLIMETERS UNLESS OTHERWISE SHOWN

R. Manzanarez
PROJECT ENGINEER

BRIDGE NO. 34-0006L/R
KILOMETER POST 13.2/13.9

DISREGARD PRINTS BEARING EARLIER REVISION DATES 04/29/02 07/20/02 12/19/02

SAN FRANCISCO OAKLAND BAY BRIDGE
EAST SPAN SEISMIC SAFETY PROJECT
SELF-ANCHORED SUSPENSION BRIDGE
(SUPERSTRUCTURE & TOWER)

E2/E3 BIKEPATH TRAVELER DETAILS NO. 1

SHEET 729R3 OF

FILE => I:\bb\04-0120F1\sas\contract plans and cco\cco\cco#2451\5-revision 02-12-10\dgn\aktrv127.dgn

100 % PS&E

USERNAME => orlvera DATE PLOTTED => 19 FEB 2010 TIME PLOTTED => 09:19:41

DIST.	COUNTY	ROUTE	KILOMETER POST TOTAL PROJECT	SHEET NO.	TOTAL SHEETS
04	SF	80	13.2/13.9	1147R2	1204

Caltrans Metric

REGISTERED ENGINEER - CIVIL

12-6-04
PLANS APPROVAL DATE

REGISTERED PROFESSIONAL ENGINEER Rafael Manzanarez No. C 36842 Exp. 6/30/10 CIVIL STATE OF CALIFORNIA

The State of California or its officers or agents shall not be responsible for the accuracy or completeness of electronic copies of this plan sheet.

T.Y. LIN / MOFFATT & NICHOL
825 BATTERY STREET
SAN FRANCISCO, CA 94111

Caltrans now has a web site! To get to the web site, go to: http://www.dot.ca.gov

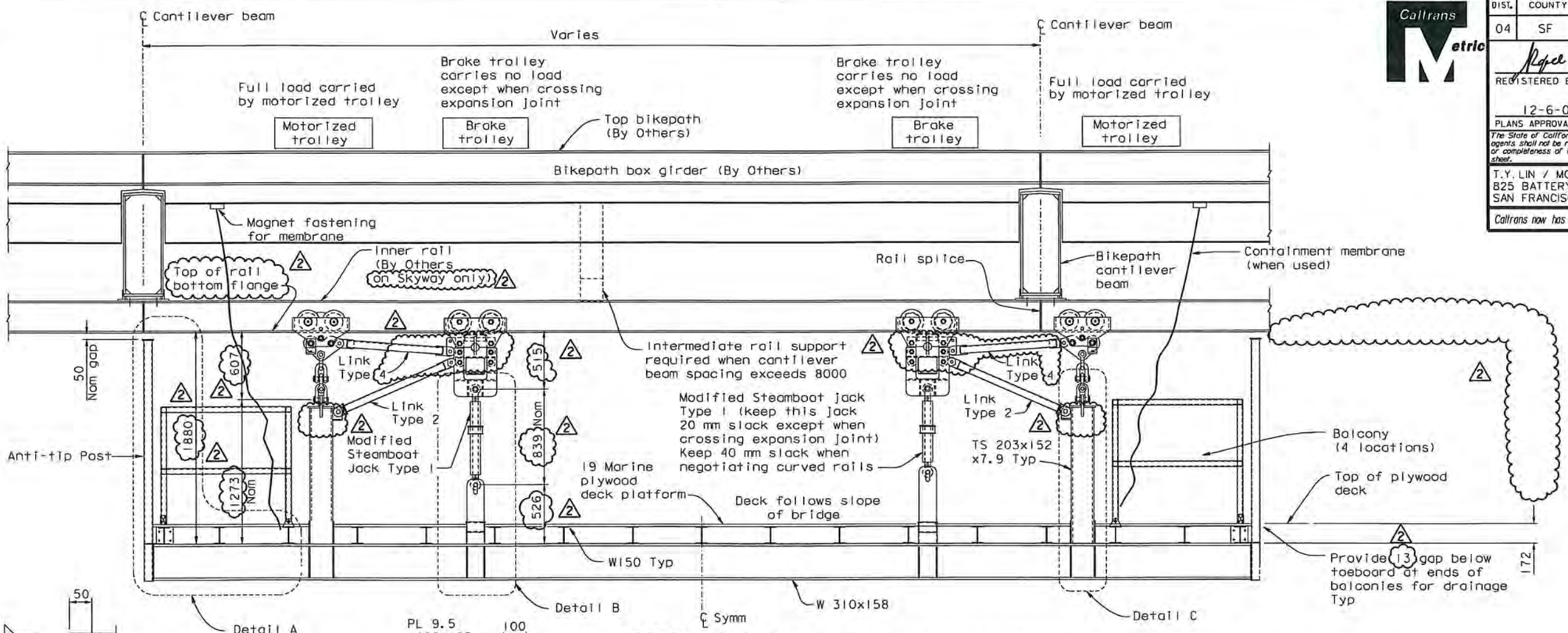

SECTION A-A (Shown on Skyway Structure at inner rail)

1:20

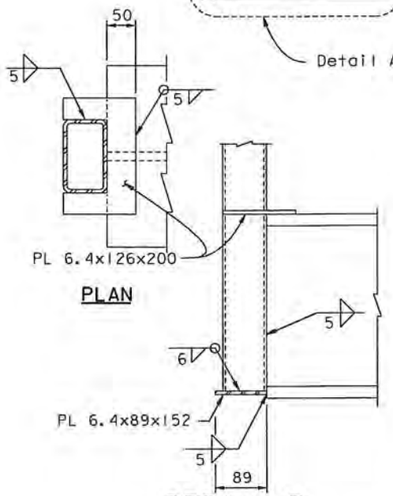

DETAIL F

1:5

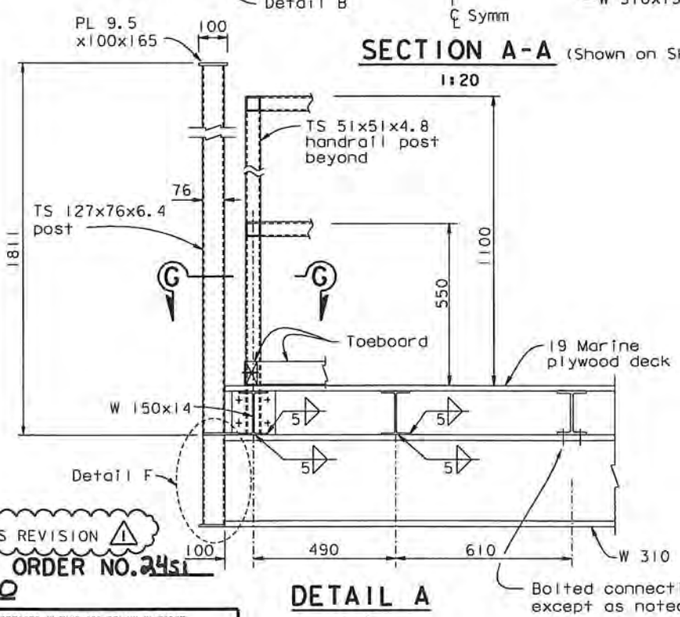

DETAIL A

1:10

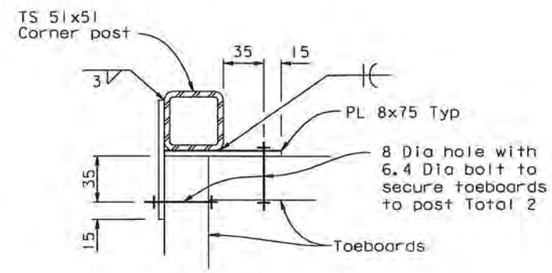

SECTION G-G

1:2.5
At corner of Balcony

NOTES:

1. For Details B & C see "E2/E3 Bikepath Traveler Details No. 5" sheet.
2. For links see "E2/E3 Bikepath Traveler Mechanical-01" sheet.

2 REVISION 2 SUPERSEDES REVISION 1

CONTRACT CHANGE ORDER NO. 24S1
SHEET 93 OF 120

REQUESTS FOR INFORMATION NOT ADDRESSED IN THIS CCO REMAIN IN FORCE

ALL DIMENSIONS ARE IN MILLIMETERS UNLESS OTHERWISE SHOWN

R. Vallzadeh/V. Toan/Y.L./W.L./F.C.
DESIGN OVERSIGHT
SIGN OFF DATE 06/19/09

MARK	DATE	DESCRIPTIONS	BY	CH'D	CCO#
2	06/19/09	TRAVELER MODIFICATIONS	RM	AS	24S1
1	07/20/07	RAIL CHANGE & MISCELLANEOUS DETAILS	RM	NV	24

REVISIONS

Rev. Date: 5-18-98

	BY	CHECKED
DESIGN	J. Otter	R. Manzanarez
DETAILS	J. Otter	J. Leventini
QUANTITIES	J. Otter	J. Leventini

PREPARED FOR THE STATE OF CALIFORNIA DEPARTMENT OF TRANSPORTATION

R. Manzanarez
PROJECT ENGINEER

BRIDGE NO. 34-0006L/R
KILOMETER POST 13.2/13.9

SAN FRANCISCO OAKLAND BAY BRIDGE
EAST SPAN SEISMIC SAFETY PROJECT
SELF-ANCHORED SUSPENSION BRIDGE
(SUPERSTRUCTURE & TOWER)

E2/E3 BIKEPATH TRAVELER DETAILS NO. 2

ORIGINAL SCALE IN MILLIMETERS FOR REDUCED PLANS 0 10 20 30 40 50 60 70 80 90 100

CU 04
EA 0120F1

DISREGARD PRINTS BEARING EARLIER REVISION DATES

REVISION DATES (PRELIMINARY STAGE ONLY) 04/25/02 01/07/03 12/15/03

SHEET 730R2 OF

FILE => I:\bb\04-0120F1\sas\contract plans and cco\cco\cco#24s1\2-revision 06-19-09\dgn\aktrv128.dgn

100 % PS&E

USERNAME => gwinrow DATE PLOTTED => 17 JUN 2009 TIME PLOTTED => 11:15:44

DIST.	COUNTY	ROUTE	KILOMETER POST TOTAL PROJECT	SHEET NO.	TOTAL SHEETS
04	SF	80	13.2/13.9	1148R2	1204

Caltrans Metric

REGISTERED ENGINEER - CIVIL

12-6-04
PLANS APPROVAL DATE

REGISTERED PROFESSIONAL ENGINEER Rafael Manzanarez No. C 36842 Exp. 6/30/10 CIVIL STATE OF CALIFORNIA

The State of California or its officers or agents shall not be responsible for the accuracy or completeness of electronic copies of this plan sheet.

T.Y. LIN / MOFFATT & NICHOL
825 BATTERY STREET
SAN FRANCISCO, CA 94111

Caltrans now has a web site! To get to the web site, go to: http://www.dot.ca.gov

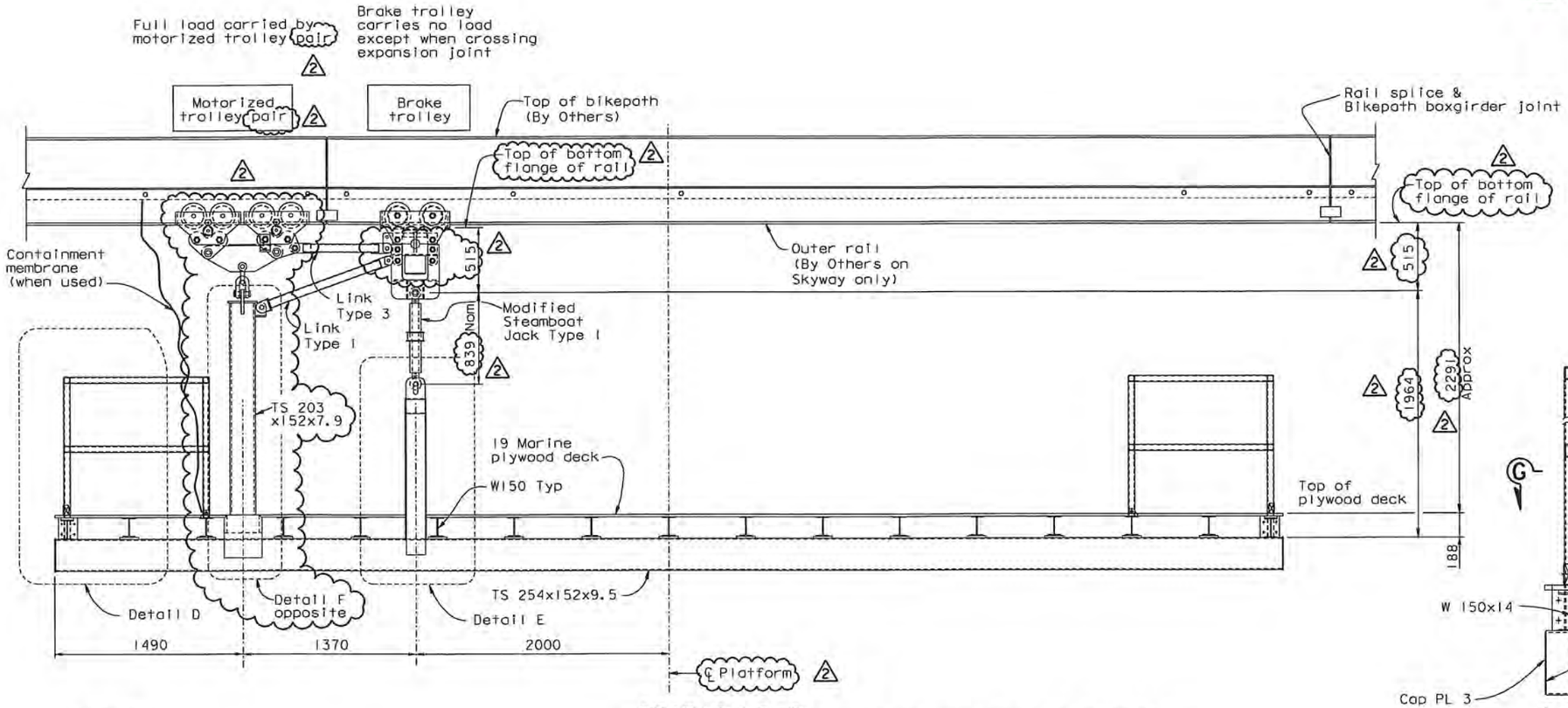

SECTION B-B
1:20
(Shown on Skyway Structure at outer rail)

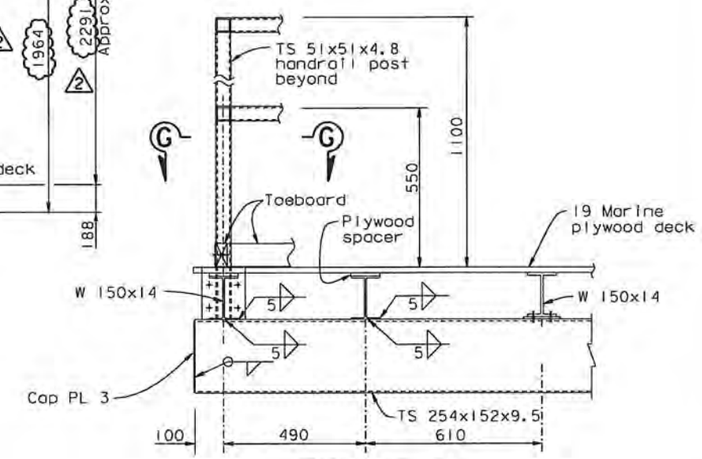

DETAIL D
1:10

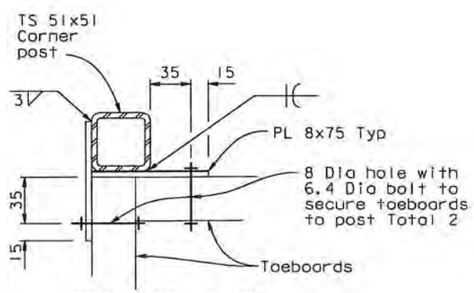

SECTION G-G
1:2.5
At corner of balcony

NOTES:

1. For Details E & F see "E2/E3 Bikepath Traveler Details No. 6" sheet.
2. For links see "E2/E3 Bikepath Traveler Mechanical-01" sheet.

2 REVISION 2 SUPERSEDES REVISION 1

CONTRACT CHANGE ORDER NO. 2451
SHEET 94 OF 120

REQUESTS FOR INFORMATION NOT ADDRESSED IN THIS CCO REMAIN IN FORCE

ALL DIMENSIONS ARE IN MILLIMETERS UNLESS OTHERWISE SHOWN

MARK	DATE	DESCRIPTIONS	BY	CH'D	CCO#
2	06/19/09	TRAVELER MODIFICATIONS	RM	AS	2451
1	07/20/07	RAIL CHANGE & MISCELLANEOUS DETAILS	RM	NV	24

REVISIONS

R. Vallzadeh/V. Toan/Y.L./W.L./F.C.
DESIGN OVERSIGHT
SIGN OFF DATE 06/18/09

DESIGN BY J. Otter CHECKED R. Manzanarez
DETAILS BY J. Otter CHECKED J. Leventini
QUANTITIES BY J. Otter CHECKED J. Leventini

PREPARED FOR THE STATE OF CALIFORNIA DEPARTMENT OF TRANSPORTATION

R. Manzanarez
PROJECT ENGINEER

BRIDGE NO. 34 No. 006L/R
KILOMETER POST 13.2/13.9

SAN FRANCISCO OAKLAND BAY BRIDGE
EAST SPAN SEISMIC SAFETY PROJECT
SELF-ANCHORED SUSPENSION BRIDGE
(SUPERSTRUCTURE & TOWER)

E2/E3 BIKEPATH TRAVELER DETAILS NO. 3

Rev. Date: 5-18-98

ORIGINAL SCALE IN MILLIMETERS FOR REDUCED PLANS 0 10 20 30 40 50 60 70 80 90 100

CU 04
EA 0120F1

DISREGARD PRINTS BEARING EARLIER REVISION DATES
REVISION DATES (PRELIMINARY STAGE ONLY) 04/25/02 01/24/03 12/19/02

SHEET 731R2 OF

FILE => I:\bb\04-0120F1\sas\contract plans and cco\cco\cco#24s1\2-revision 06-19-09\dgn\aktrv129.dgn

100 % PS&E

USERNAME => dwinrow DATE PLOTTED => 17 JUN 2009 TIME PLOTTED => 11:16:41

DIST.	COUNTY	ROUTE	KILOMETER POST TOTAL PROJECT	SHEET NO.	TOTAL SHEETS
04	SF	80	13.2/13.9	1149R1	1204

Caltrans Metric

REGISTERED ENGINEER - CIVIL

12-6-04
PLANS APPROVAL DATE

REGISTERED PROFESSIONAL ENGINEER Rafael Manzanarez No. C 36842 Exp. 6/30/10 CIVIL STATE OF CALIFORNIA

The State of California or its officers or agents shall not be responsible for the accuracy or completeness of electronic copies of this plan sheet.

T.Y. LIN / MOFFATT & NICHOL
825 BATTERY STREET
SAN FRANCISCO, CA 94111

Caltrans now has a web site! To get to the web site, go to: http://www.dot.ca.gov

NOTE:
Locate lifting eye at CG of overhang bracket

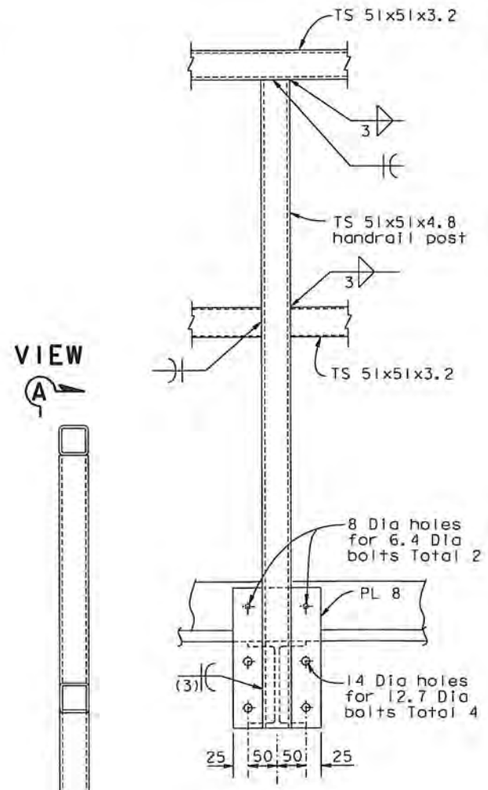

VIEW A-A
1:5

LIFTING EYE
12.7 Dia Bar

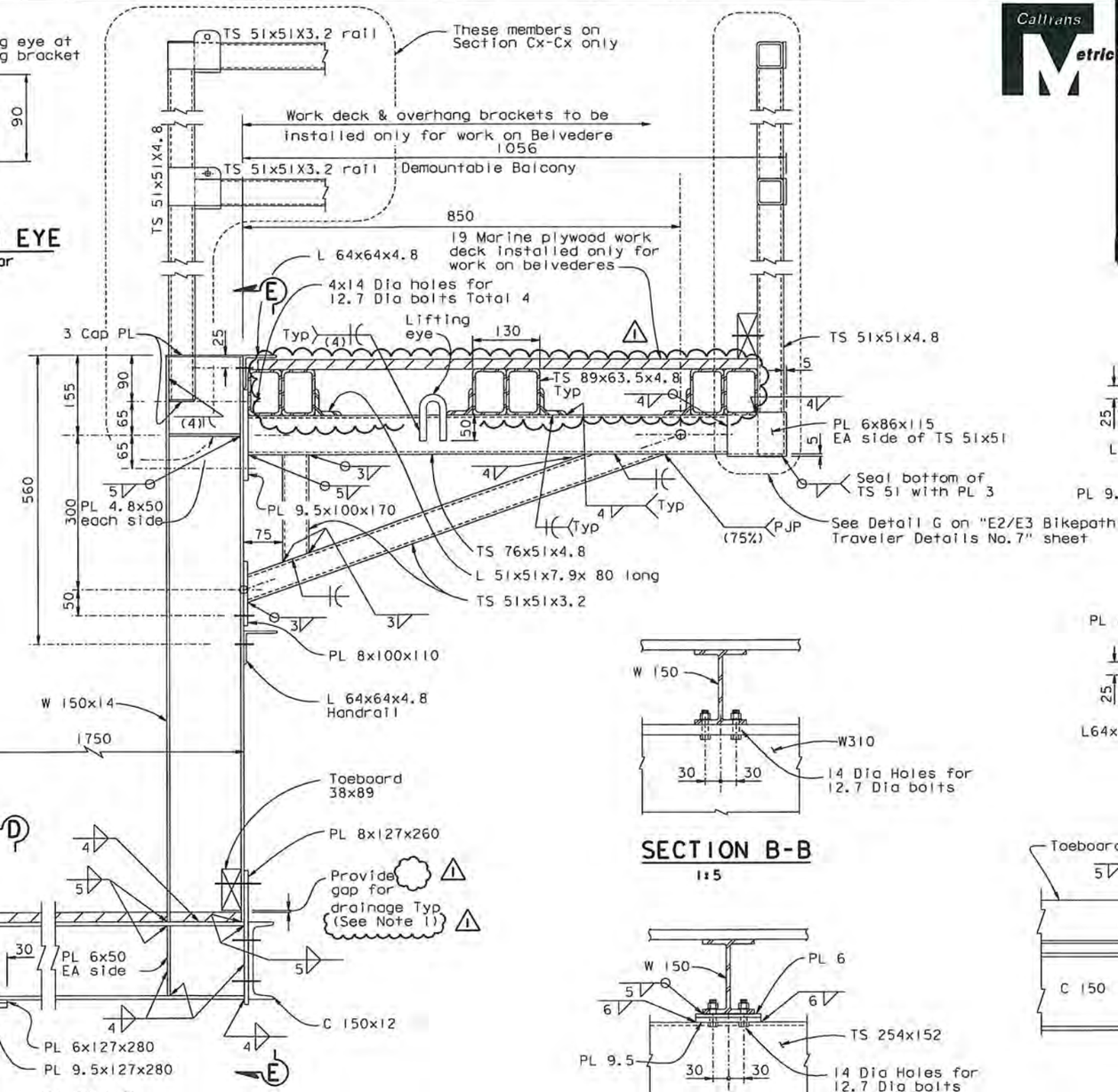

SECTION C-C & CX-CX
1:5

SECTION B-B
1:5

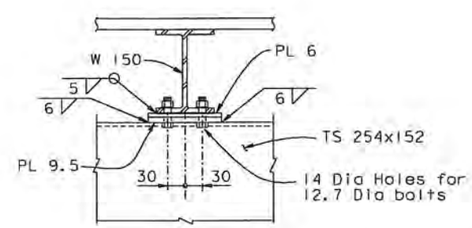

SECTION D-D
1:5

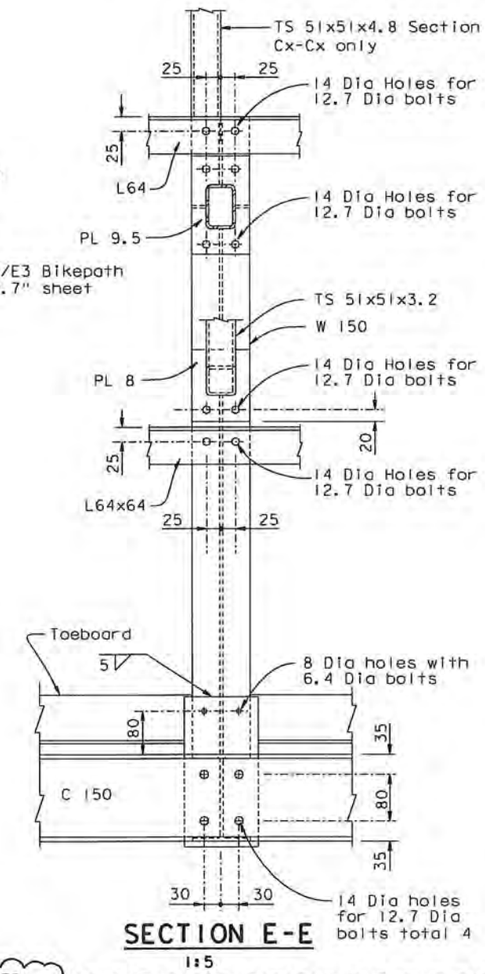

SECTION E-E
1:5

NOTES:
1. For gap size, see "E2/E3 Bikepath Traveler Details No. 2" sheet.

CONTRACT CHANGE ORDER NO. 24S1
SHEET 95 OF 120

REQUESTS FOR INFORMATION NOT ADDRESSED IN THIS CCO REMAIN IN FORCE

ALL DIMENSIONS ARE IN MILLIMETERS UNLESS OTHERWISE SHOWN

R. Vallzadeh/V. Toan/Y.L./W.L./F.C.
DESIGN OVERSIGHT
SIGN OFF DATE 06/19/09

MARK	DATE	DESCRIPTIONS	BY	CH'D	CCO#
1	06/19/09	TRAVELER MODIFICATIONS	RM	TH	24S1

REVISIONS

DESIGN	BY J. Otter	CHECKED R. Manzanarez	
DETAILS	BY J. Otter	CHECKED J. Leventini	
QUANTITIES	BY J. Otter	CHECKED J. Leventini	

PREPARED FOR THE STATE OF CALIFORNIA DEPARTMENT OF TRANSPORTATION

R. Manzanarez
PROJECT ENGINEER

BRIDGE NO. 34-0006L/R
KILOMETER POST 13.2/13.9

CU 04
EA 0120F1

SAN FRANCISCO OAKLAND BAY BRIDGE
EAST SPAN SEISMIC SAFETY PROJECT
SELF-ANCHORED SUSPENSION BRIDGE
(SUPERSTRUCTURE & TOWER)

E2/E3 BIKEPATH TRAVELER DETAILS NO. 4

DISREGARD PRINTS BEARING EARLIER REVISION DATES
REVISION DATES (PRELIMINARY STAGE ONLY) 01/25/02 01/30/02 12/11/02
SHEET 732R1 OF

Rev. Date: 5-18-98

ORIGINAL SCALE IN MILLIMETERS FOR REDUCED PLANS 0 10 20 30 40 50 60 70 80 90 100

FILE => I:\bb\04-0120F1\sas\contract plans and cco\cco\cco#24s1\2-revision 06-19-09\dgn\aktrv130.dgn

100 % PS&E

USERNAME => dwinrow DATE PLOTTED => 17 JUN 2009 TIME PLOTTED => 11:17:29

DIST.	COUNTY	ROUTE	KILOMETER POST TOTAL PROJECT	SHEET NO.	TOTAL SHEETS
04	SF	80	13.2/13.9	1150R2	1204

Caltrans Metric

REGISTERED ENGINEER - CIVIL

12-6-04
PLANS APPROVAL DATE

The State of California or its officers or agents shall not be responsible for the accuracy or completeness of electronic copies of this plan sheet.

REGISTERED PROFESSIONAL ENGINEER Rafael Manzanarez No. C 36842 Exp. 6/30/10 CIVIL STATE OF CALIFORNIA

T.Y. LIN / MOFFATT & NICHOL
825 BATTERY STREET
SAN FRANCISCO, CA 94111

Caltrans now has a web site! To get to the web site, go to: http://www.dot.ca.gov

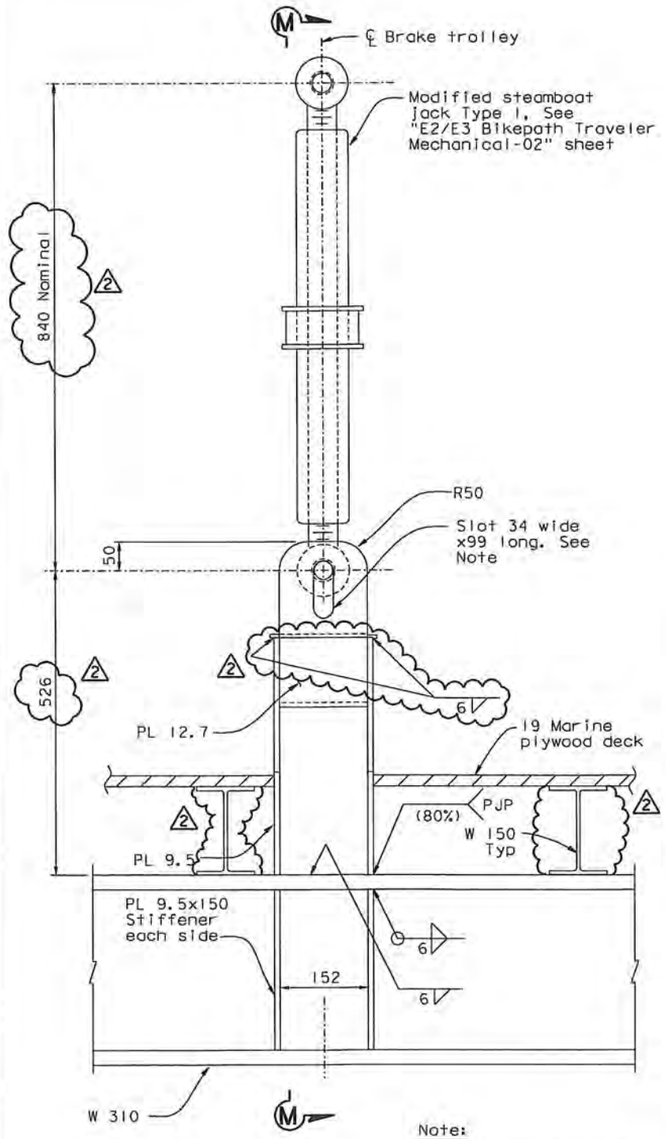

DETAIL B
1:5

Note:

Slot ensures brake trolley will not carry load unless steamboat jack is tightened.

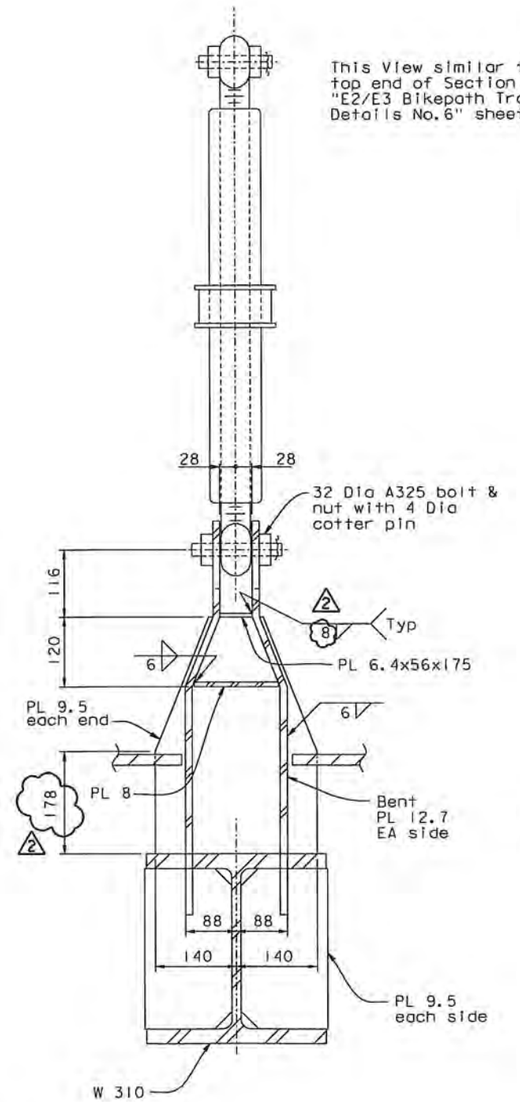

SECTION M-M
1:5

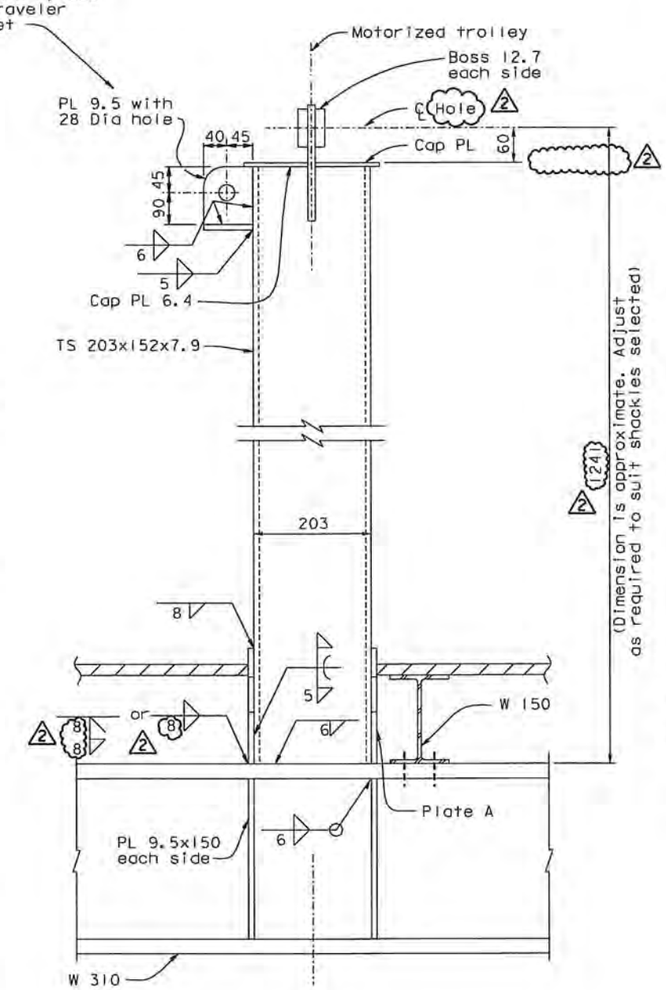

DETAIL C
1:5

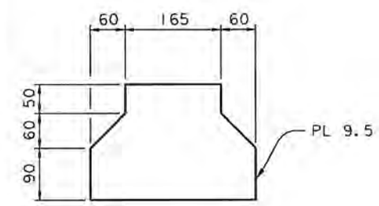

DETAIL PLATE A
1:5

2 REVISION 2 SUPERSEDES REVISION 1

CONTRACT CHANGE ORDER NO. 24S1
SHEET 96 OF 120

REQUESTS FOR INFORMATION NOT ADDRESSED IN THIS CCO REMAIN IN FORCE

ALL DIMENSIONS ARE IN MILLIMETERS UNLESS OTHERWISE SHOWN

SAN FRANCISCO OAKLAND BAY BRIDGE
EAST SPAN SEISMIC SAFETY PROJECT
SELF-ANCHORED SUSPENSION BRIDGE
(SUPERSTRUCTURE & TOWER)

E2/E3 BIKEPATH TRAVELER DETAILS NO. 5

R. Valizadeh/V. Toan/Y.L./W.L./F.C.
DESIGN OVERSIGHT
Roger Valizadeh / Vong Toan / Y. Liu
SIGN OFF DATE 06/19/09

MARK	DATE	DESCRIPTIONS	BY	CH'D	CCO#
2	06/19/09	TRAVELER MODIFICATIONS	RM	AS	24S1
1	07/20/07	RAIL CHANGE & MISCELLANEOUS DETAILS	RM	NV	24

REVISIONS

	BY	CHECKED
DESIGN	J. Otter	R. Manzanarez
DETAILS	J. Otter	J. Leventini
QUANTITIES	J. Otter	J. Leventini

PREPARED FOR THE STATE OF CALIFORNIA DEPARTMENT OF TRANSPORTATION

R. Manzanarez
PROJECT ENGINEER

BRIDGE NO. 34-0006L/R
KILOMETER POST 13.2/13.9

Rev. Date: 5-18-98

ORIGINAL SCALE IN MILLIMETERS FOR REDUCED PLANS 0 10 20 30 40 50 60 70 80 90 100

CU 04
EA 0120F1

DISREGARD PRINTS BEARING EARLIER REVISION DATES

REVISION DATES (PRELIMINARY STAGE ONLY) 04/15/02 07/01/02 12/19/02

SHEET 733R2 OF

FILE => I:\bb\04-012001\sas\contract plans and cco\cco\cco#24s1\2-revision 06-19-09\dgn\aktrv131.dgn

100 % PS&E

USERNAME => dwinrow DATE PLOTTED => 17 JUN 2009 TIME PLOTTED => 11:18:58

Note:

Slot ensures brake trolley will not carry load unless steamboat jack is tightened.

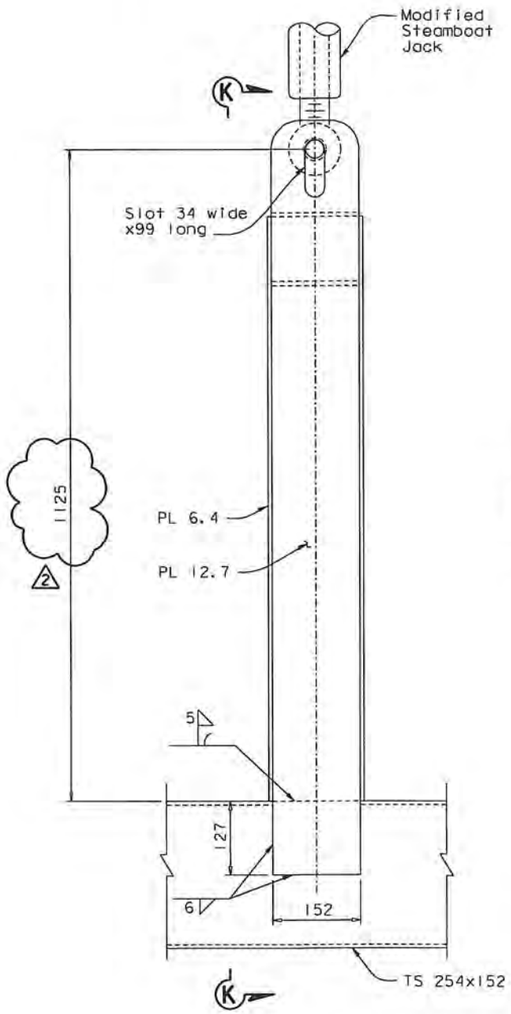

DETAIL E
1:5

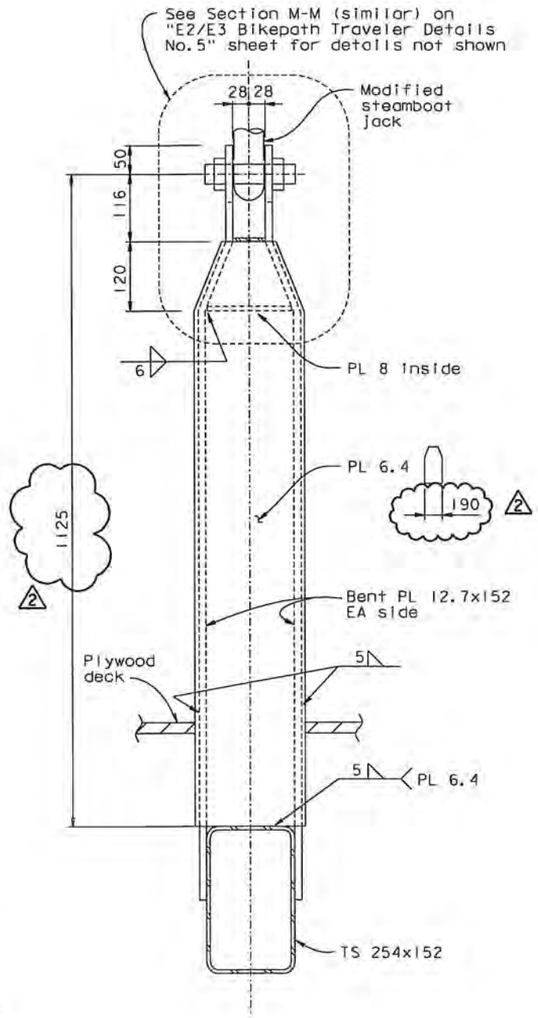

SECTION K-K
1:5

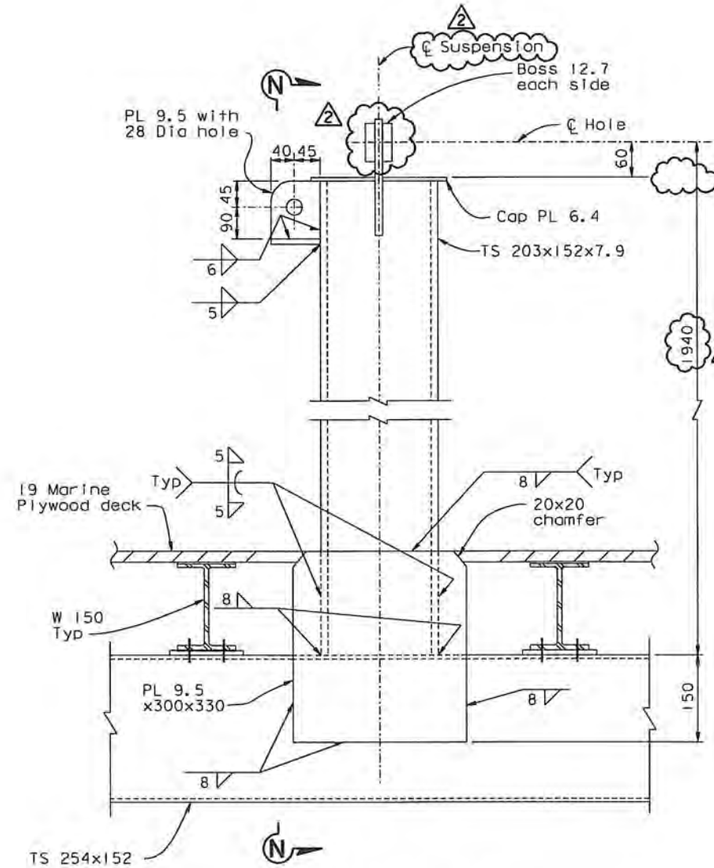

DETAIL F
1:5

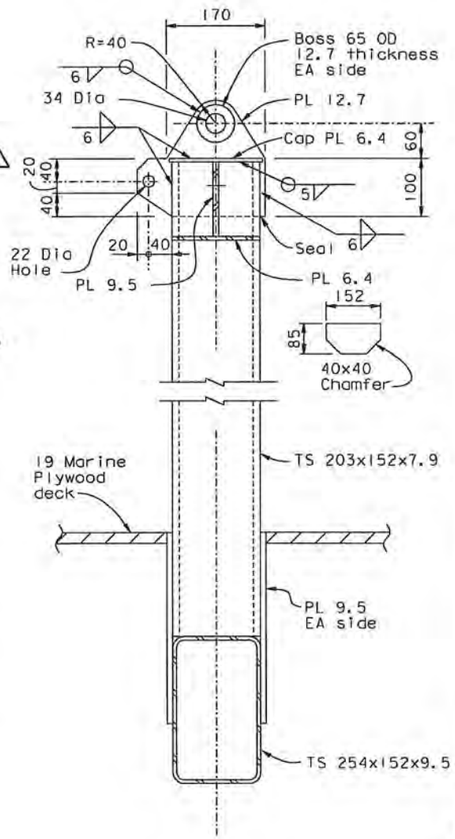

SECTION N-N
1:5

2 REVISION 2 SUPERSEDES REVISION 1

CONTRACT CHANGE ORDER NO. 24 S1
SHEET 97 OF 120

REQUESTS FOR INFORMATION NOT ADDRESSED IN THIS CCO REMAIN IN FORCE

ALL DIMENSIONS ARE IN MILLIMETERS UNLESS OTHERWISE SHOWN

DIST.	COUNTY	ROUTE	KILOMETER POST TOTAL PROJECT	SHEET NO.	TOTAL SHEETS
04	SF	80	13.2/13.9	1151R2	1204

Caltrans Metric

REGISTERED ENGINEER - CIVIL
12-6-04
PLANS APPROVAL DATE

REGISTERED PROFESSIONAL ENGINEER Rafael Manzanarez No. C 36842 Exp. 6/30/10 CIVIL STATE OF CALIFORNIA

The State of California or its officers or agents shall not be responsible for the accuracy or completeness of electronic copies of this plan sheet.

T.Y. LIN / MOFFATT & NICHOL
825 BATTERY STREET
SAN FRANCISCO, CA 94111

Caltrans now has a web site! To get to the web site, go to: http://www.dot.ca.gov

R. Valizadeh/V. Toan/Y.L./W.L./F.C.
DESIGN OVERSIGHT
Roger Valizadeh / Vong Toan / Y. Liu
SIGN OFF DATE 06/19/09

MARK	DATE	DESCRIPTIONS	BY	CH'D	CCO#
2	06/19/09	TRAVELER MODIFICATIONS	RM	AS	24S1
1	07/20/07	RAIL CHANGE & MISCELLANEOUS DETAILS	RD	NV	24

REVISIONS

	BY	CHECKED
DESIGN	J. Otter	R. Manzanarez
DETAILS	J. Otter	J. Leventini
QUANTITIES	J. Otter	J. Leventini

PREPARED FOR THE STATE OF CALIFORNIA DEPARTMENT OF TRANSPORTATION

R. Manzanarez
PROJECT ENGINEER

BRIDGE NO. 34-0006L/R
KILOMETER POST 13.2/13.9

SAN FRANCISCO OAKLAND BAY BRIDGE
EAST SPAN SEISMIC SAFETY PROJECT
SELF-ANCHORED SUSPENSION BRIDGE
(SUPERSTRUCTURE & TOWER)

E2/E3 BIKEPATH TRAVELER DETAILS NO. 6

Rev. Date: 5-18-98

ORIGINAL SCALE IN MILLIMETERS FOR REDUCED PLANS 0 10 20 30 40 50 60 70 80 90 100

CU 04
EA 0120F1

DISREGARD PRINTS BEARING EARLIER REVISION DATES

REVISION DATES (PRELIMINARY STAGE ONLY) 04/19/02 07/20/02 12/19/02

SHEET 734R2 OF

FILE => I:\bb\04-012001\sas\contract plans and cco\cco\cco#24s1\2-revision 06-19-09\dgn\aktrv132.dgn

100 % PS&E

USERNAME => dwinrow DATE PLOTTED => 17 JUN 2009 TIME PLOTTED => 11:19:56

DIST.	COUNTY	ROUTE	KILOMETER POST TOTAL PROJECT	SHEET NO.	TOTAL SHEETS
04	SF	80	13.2/13.9	1152R1	1204

Caltrans Metric

REGISTERED ENGINEER - CIVIL

12-6-04
PLANS APPROVAL DATE

REGISTERED PROFESSIONAL ENGINEER Rafael Manzanarez No. C 36842 Exp. 6/30/10 CIVIL STATE OF CALIFORNIA

The State of California or its officers or agents shall not be responsible for the accuracy or completeness of electronic copies of this plan sheet.

T.Y. LIN / MOFFATT & NICHOL
825 BATTERY STREET
SAN FRANCISCO, CA 94111

Caltrans now has a web site! To get to the web site, go to: http://www.dot.ca.gov

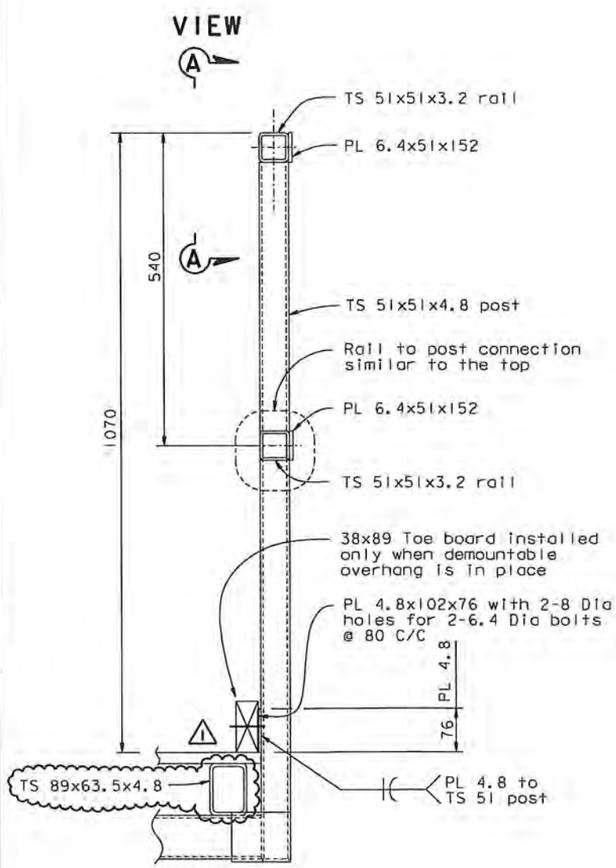

DETAIL G

1:5

(Railing details for platform extension at belvederes)

Note: For details not shown, see Section C-C on "Bikepath Traveler Details No. 4" sheet.

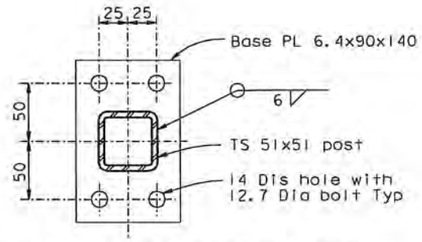

HANDRAIL POST BASE PLATE DETAILS

1:2.5

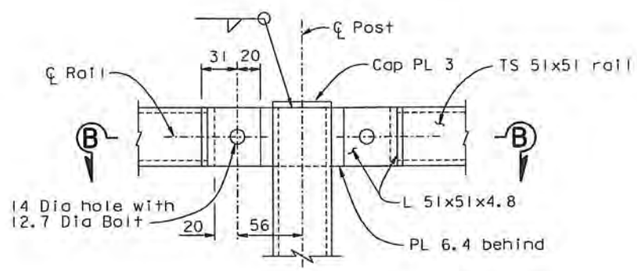

VIEW A-A

1:2.5

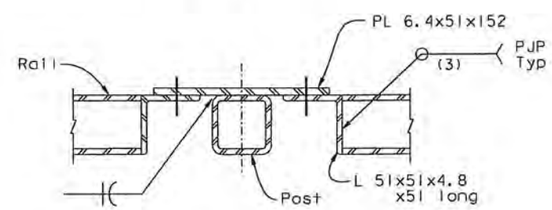

SECTION B-B

1:2.5

Note: Use similar details for rail joints at corners of belvedere balcony platform railing

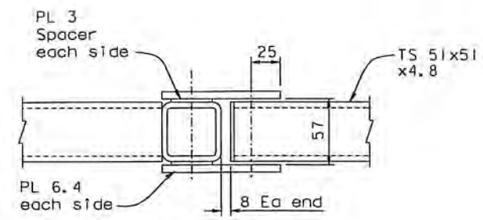

TYPICAL PLAN
(Cap PL not shown)

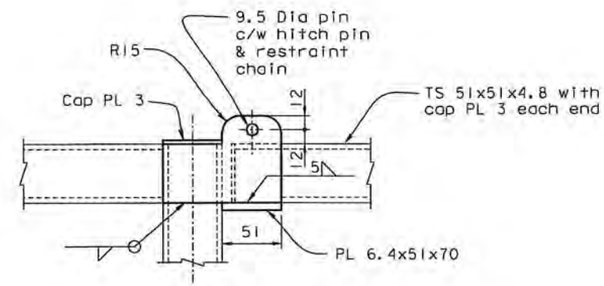

ELEVATION AT TOP RAIL

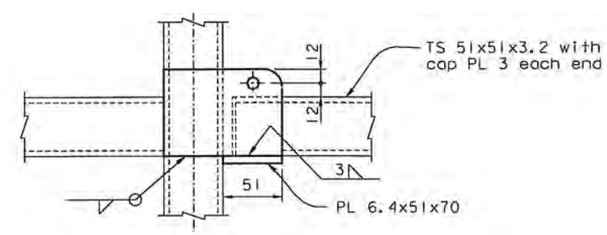

ELEVATION AT INTERMEDIATE RAIL

HANDRAIL GATE

1:2.5

CONTRACT CHANGE ORDER NO. 24S1
SHEET 98 OF 120

REQUESTS FOR INFORMATION NOT ADDRESSED IN THIS CCO REMAIN IN FORCE

ALL DIMENSIONS ARE IN MILLIMETERS UNLESS OTHERWISE SHOWN

MARK	DATE	DESCRIPTIONS	BY	CH'D	CCO#
1	06/19/09	TRAVELER MODIFICATIONS	RM	TH	24S1

REVISIONS

R. Valtzadeh/V. Toan/Y.L./W.L./F.C.
DESIGN OVERSIGHT
SIGN OFF DATE 06/19/09

	BY	CHECKED
DESIGN	J. Otter	R. Manzanarez
DETAILS	J. Otter	J. Leventini
QUANTITIES	J. Otter	J. Leventini

PREPARED FOR THE STATE OF CALIFORNIA DEPARTMENT OF TRANSPORTATION

R. Manzanarez
PROJECT ENGINEER

BRIDGE NO. 34-0006L/R
KILOMETER POST 13.2/13.9

SAN FRANCISCO OAKLAND BAY BRIDGE
EAST SPAN SEISMIC SAFETY PROJECT
SELF-ANCHORED SUSPENSION BRIDGE
(SUPERSTRUCTURE & TOWER)

E2/E3 BIKEPATH TRAVELER DETAILS NO. 7

Rev. Date: 5-18-98

ORIGINAL SCALE IN MILLIMETERS FOR REDUCED PLANS 0 10 20 30 40 50 60 70 80 90 100

CU 04
EA 0120F1

DISREGARD PRINTS BEARING EARLIER REVISION DATES

REVISION DATES (PRELIMINARY STAGE ONLY) 04/25/02 01/24/02 12/13/02

SHEET 735R1 OF

FILE => I:\bb\04-012001\sas\contract plans and cco\cco\cco#24s1\2-revision 06-19-09\dgn\aktrv133.dgn

100 % PS&E

USERNAME => dwinrow DATE PLOTTED => 17 JUN 2009 TIME PLOTTED => 11:21:23

DIST.	COUNTY	ROUTE	KILOMETER POST TOTAL PROJECT	SHEET NO.	TOTAL SHEETS
04	SF	80	13.2/13.9	1152SIR1	1204

Caltrans Metric

Bashkim Prishtina

REGISTERED ENGINEER - CIVIL

12-19-08

PLANS APPROVAL DATE

REGISTERED PROFESSIONAL ENGINEER Bashkim Prishtina No. C 053561 Exp. 6/30/11 CIVIL STATE OF CALIFORNIA

The State of California or its officers or agents shall not be responsible for the accuracy or completeness of electronic copies of this plan sheet.

T.Y. LIN / MOFFATT & NICHOL
825 BATTERY STREET
SAN FRANCISCO, CA 94111

Caltrans now has a web site! To get to the web site, go to: http://www.dot.ca.gov

△1 This Sheet intentionally left blank.

△1 REVISION △1 SUPERSEDES REVISION △0

CONTRACT CHANGE ORDER NO. 24S1
SHEET 99 OF 120

REQUESTS FOR INFORMATION NOT ADDRESSED IN THIS CCO REMAIN IN FORCE

ALL DIMENSIONS ARE IN MILLIMETERS UNLESS OTHERWISE SHOWN

100 % PS&E

R. Vallizadeh/V. Toan/Y.L./W.L./F.C.
DESIGN OVERSIGHT
SIGN OFF DATE 06/18/09

MARK	DATE	DESCRIPTIONS	BY	CH'D	CCO#
△1	06/19/09	TRAVELER MODIFICATIONS	BP	AS	24S1
△0	07/20/07	RAIL CHANGE & MISCELLANEOUS DETAILS	BP	NV	24

REVISIONS

	BY	CHECKED
DESIGN	J. Otter	B. Prishtina
DETAILS	J. Otter	B. Prishtina
QUANTITIES	J. Otter	B. Prishtina

PREPARED FOR THE STATE OF CALIFORNIA DEPARTMENT OF TRANSPORTATION

R. Manzanarez
PROJECT ENGINEER

BRIDGE NO. 34-0006L/R
KILOMETER POST 13.2/13.9

SAN FRANCISCO OAKLAND BAY BRIDGE
EAST SPAN SEISMIC SAFETY PROJECT
SELF-ANCHORED SUSPENSION BRIDGE
(SUPERSTRUCTURE & TOWER)

BIKEPATH TRAVELER DETAILS NO. 8

Rev. Date: 5-18-98

ORIGINAL SCALE IN MILLIMETERS FOR REDUCED PLANS 0 10 20 30 40 50 60 70 80 90 100

CU 04
EA 0120F1

DISREGARD PRINTS BEARING EARLIER REVISION DATES 12/19/08

REVISION DATES (PRELIMINARY STAGE ONLY)

SHEET 7355IR1 OF

FILE => I:\bb\04-0120F1\sas\contract plans and cco\cco\cco#24s1\2-revision 06-19-09\dgn\aktrv099s1.dgn

USERNAME => dwinrow DATE PLOTTED => 17 JUN 2009 TIME PLOTTED => 12:09:48

DIST.	COUNTY	ROUTE	KILOMETER POST TOTAL PROJECT	SHEET NO.	TOTAL SHEETS
04	SF	80	13.2/13.9	1157R2	1204

Caltrans Metric

REGISTERED ENGINEER - CIVIL

12-6-04
PLANS APPROVAL DATE

The State of California or its officers or agents shall not be responsible for the accuracy or completeness of electronic copies of this plan sheet.

REGISTERED PROFESSIONAL ENGINEER Rafael Manzanarez No. C 36842 Exp. 6/30/10 CIVIL STATE OF CALIFORNIA

T.Y. LIN / MOFFATT & NICHOL
825 BATTERY STREET
SAN FRANCISCO, CA 94111

Caltrans now has a web site! To get to the web site, go to: http://www.dot.ca.gov

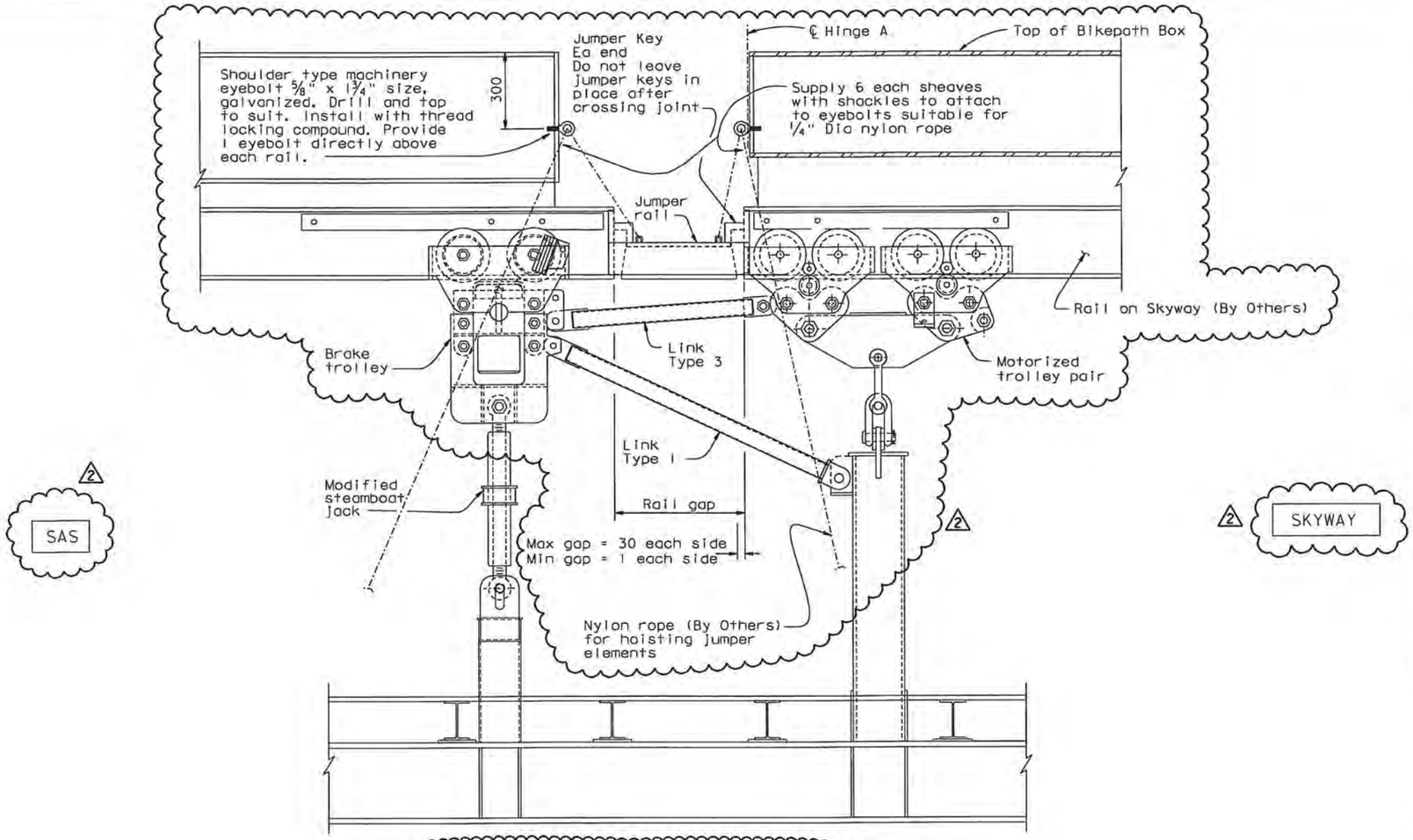

EXPANSION JOINT CROSSING

1:10

(Outer rail shown, inner rail similar but has single motorized trolley)

EXPANSION JOINT CROSSING SEQUENCE

When crossing joint:

1. Stop before crossing expansion joint.
2. Install jumper rails of the appropriate length complete with capscrews. Do not exceed permissible gap distance.
3. Install jumper keys at each end of jumper rail.
4. Ensure no weight is on brake trolley.
5. Remove trolley stops.
6. Cross expansion joint with brake trolley.
7. Valve off motorized trolley prior to it's crossing expansion joint. (Crossing of expansion joint will be powered by one trolley per rail).
8. Use steamboat jack to transfer weight from motorized trolley to brake trolley.
9. Cross expansion joint with motorized trolley.
10. Release steamboat jack to shift weight back to motorized trolley.
11. Re-install trolley stops.
12. Remove jumper rails.
13. Open valve to motorized trolley.

NOTES:

1. A special procedure is necessary in order to cross expansion joints. The jumper rails are capable of carrying the full weight of loaded trolleys but the weight shift procedure described below is a safety precaution to minimize the possibility of accidental displacement of the jumper rails by the trolley wheels and to prevent trolley wheels getting lodged in the gaps.
2. Expansion joint crossing sequence is described with brake trolley leading, crossing sequence similar with motorized trolley leading.
3. Jumper rails with jumper keys installed do not accommodate thermal movements in the rail joint. Therefore, jumper rail must not remain in place over a period when rail joint movements may occur.
4. All information on this sheet (E2/E3 BIKEPATH TRAVELER RAILS-05) shall be engraved on a 3 mm stainless steel plate and affix to the traveler at one control station.

100 % PS&E

2 REVISION 2 SUPERSEDES REVISION 1

CONTRACT CHANGE ORDER NO. 24S1
SHEET 100 OF 120

REQUESTS FOR INFORMATION NOT ADDRESSED IN THIS CCO REMAIN IN FORCE

ALL DIMENSIONS ARE IN MILLIMETERS UNLESS OTHERWISE SHOWN

R. Valizadeh/V. Toan/Y.L./W.L./F.C.
DESIGN OVERSIGHT
Roger Valizadeh / Vong Toan / Y. Liu
SIGN OFF DATE 06/19/09

MARK	DATE	DESCRIPTIONS	BY	CH'D	CCO#
2	06/19/09	TRAVELER MODIFICATIONS	RM	AS	24S1
1	08/04/06	TRAVELER RAIL MODIFICATIONS	RM	NV	24

REVISIONS

	BY	CHECKED
DESIGN	J. Otter	R. Manzanarez
DETAILS	J. Otter	J. Leventini
QUANTITIES	J. Otter	J. Leventini

PREPARED FOR THE STATE OF CALIFORNIA DEPARTMENT OF TRANSPORTATION

R. Manzanarez
PROJECT ENGINEER

BRIDGE NO. 34-0006L/R
KILOMETER POST 13.2/13.9

SAN FRANCISCO OAKLAND BAY BRIDGE
EAST SPAN SEISMIC SAFETY PROJECT
SELF-ANCHORED SUSPENSION BRIDGE
(SUPERSTRUCTURE & TOWER)

E2/E3 BIKEPATH TRAVELER RAILS-05

Rev. Date: 5-18-98

ORIGINAL SCALE IN MILLIMETERS FOR REDUCED PLANS 0 10 20 30 40 50 60 70 80 90 100

CU 04
EA 0120F1

DISREGARD PRINTS BEARING EARLIER REVISION DATES

REVISION DATES (PRELIMINARY STAGE ONLY) 04/15/02 07/01/02 12/19/02

SHEET 740R2 OF

FILE => I:\bb\04-012001\sas\contract plans and cco\cco\cco#24s1\2-revision 06-19-09\dgn\aktrv138.dgn

USERNAME => dwinrow DATE PLOTTED => 17 JUN 2009 TIME PLOTTED => 11:24:08

DIST.	COUNTY	ROUTE	KILOMETER POST TOTAL PROJECT	SHEET NO.	TOTAL SHEETS
04	SF	80	13.2/13.9	1159R2	1204

Caltrans Metric

REGISTERED ENGINEER - MECHANICAL

12-6-04

PLANS APPROVAL DATE

REGISTERED PROFESSIONAL ENGINEER Roupen Danikian No. C 56519 Exp. 06/30/09 CIVIL STATE OF CALIFORNIA

The State of California or its officers or agents shall not be responsible for the accuracy or completeness of electronic copies of this plan sheet.

T.Y. LIN / MOFFATT & NICHOL
825 BATTERY STREET
SAN FRANCISCO, CA 94111

Caltrans now has a web site! To get to the web site, go to: http://www.dot.ca.gov

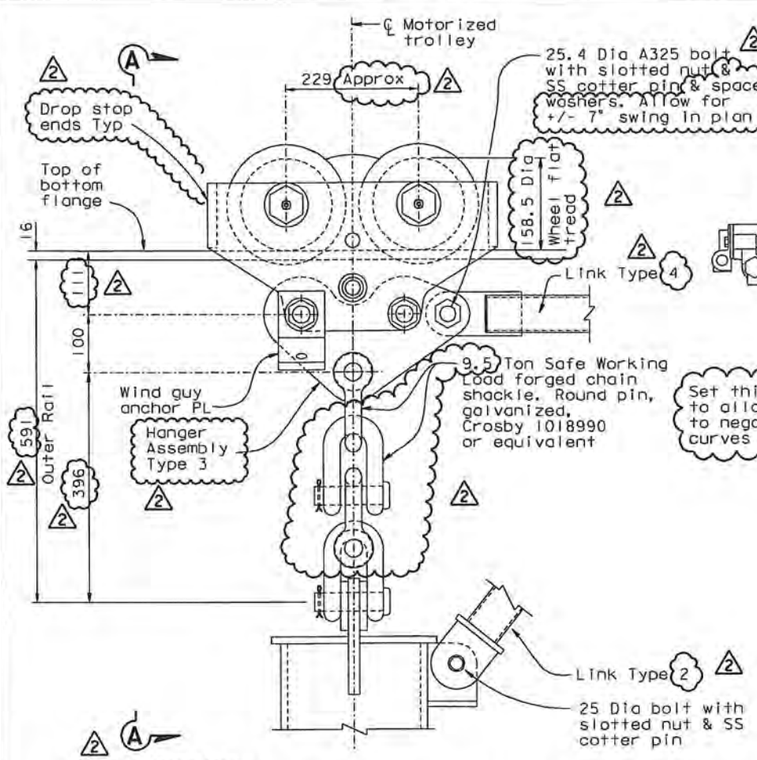

INNER RAIL MOTORIZED TROLLEY DETAIL

1:5 (2 Required)

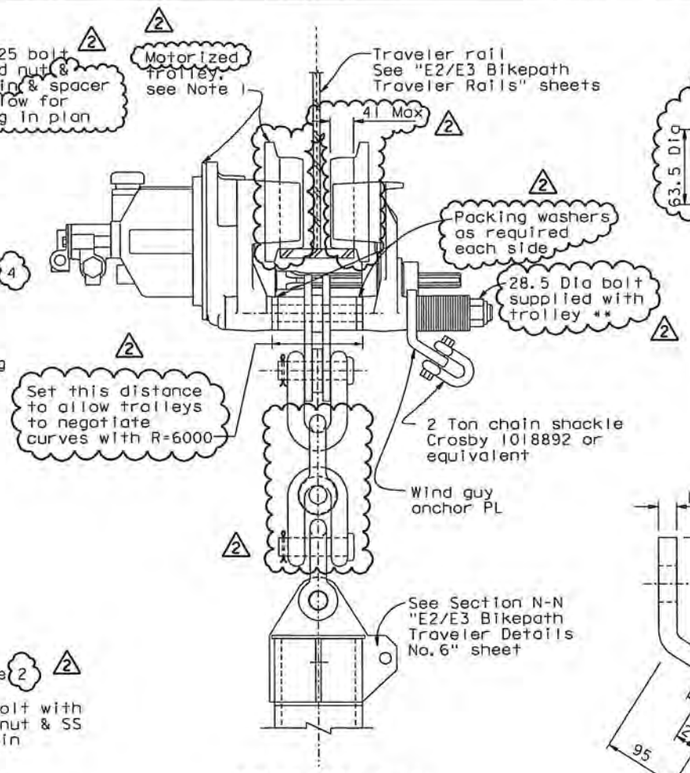

SECTION A-A

1:5

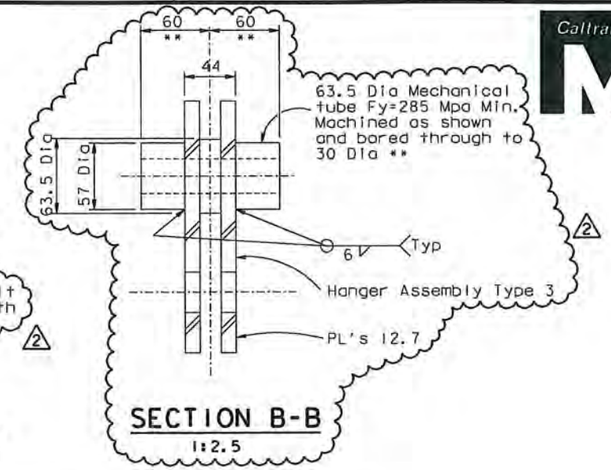

SECTION B-B

1:2.5

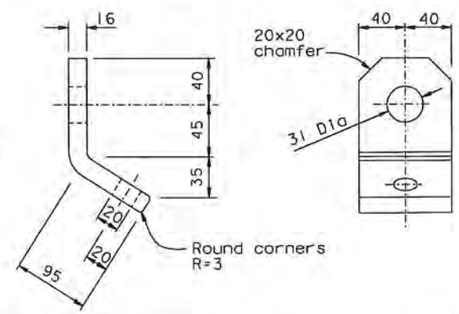

WIND GUY ANCHOR PLATE DETAIL

1:2.5

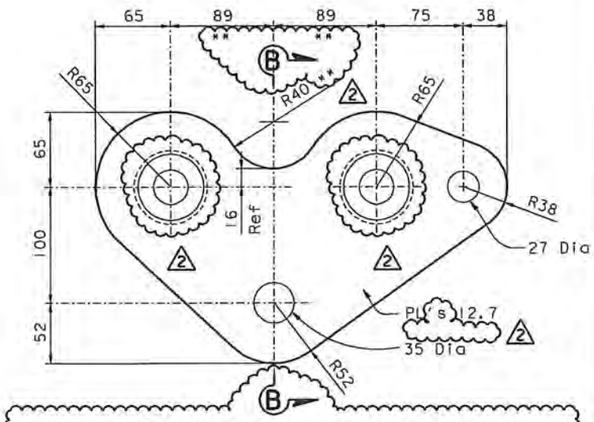

HANGER ASSEMBLY TYPE 3

1:2.5 (2 Required)

** Adapt dimensions noted thus to actual measured dimensions of the motorized trolleys

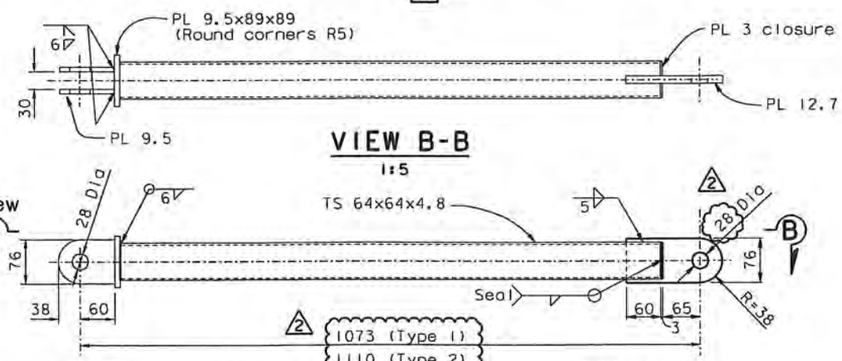

VIEW B-B

1:5

LINK TYPE 1 & 2

1:5 See Note 2

(2 required Type 1)
(2 required Type 2)

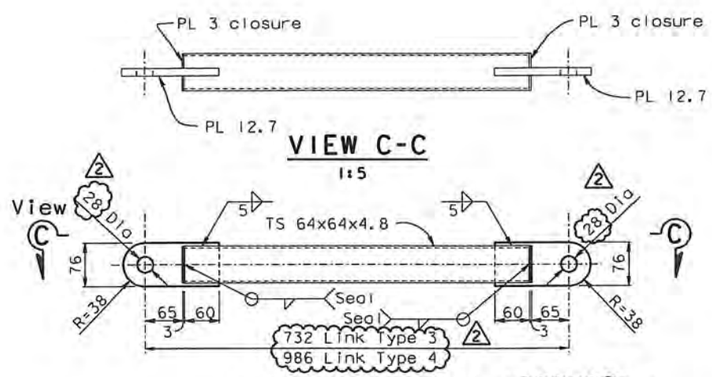

VIEW C-C

1:5

LINK TYPE 3 & 4

1:5 See Note 2

(2 required Type 3)
(2 required Type 4)

NOTES:

1. The motorized trolley shall be Ingersoll Rand Model ATET-MR 3/6 piston air motor driven trolley rated for 3000 Kg for "Man Rider" use. Wheels shall be flat tread type.
2. For motor controls, see E2/E3 "Bikepath Traveler Air system" sheet.
3. Verify actual dimensions of equipment supplied by Ingersoll Rand and adjust dimensions as required.
4. For traveler rails, see "E2/E3 Bikepath Traveler Rails" sheets.
5. Quantities given are per one traveler.

REGISTERED PROFESSIONAL ENGINEER Tien Hung Ho No. C 43990 Exp. 06/30/11 CIVIL STATE OF CALIFORNIA

FOR REVISION 2 ONLY

CONTRACT CHANGE ORDER NO. 24S1
SHEET 101 OF 120

REQUESTS FOR INFORMATION NOT ADDRESSED IN THIS CCO REMAIN IN FORCE

2 REVISION 2 SUPERSEDES REVISION 1

ALL DIMENSIONS ARE IN MILLIMETERS UNLESS OTHERWISE SHOWN

MARK	DATE	DESCRIPTIONS	BY	CH'D	CCO#
2	06/19/09	TRAVELER MODIFICATIONS	TH	AS	24S1
1	07/20/07	RAIL CHANGE & MISCELLANEOUS DETAILS	RD	NV	24

REVISIONS

R. Vallizadeh/V. Toon/Y.L./W.L./F.C.
DESIGN OVERSIGHT
SIGN OFF DATE 06/19/09

Rev. Date: 5-18-98

DESIGN BY J. Otter CHECKED R. Danikian
DETAILS BY J. Otter CHECKED M. Roberts
QUANTITIES BY J. Otter CHECKED R. Roberts

PREPARED FOR THE STATE OF CALIFORNIA DEPARTMENT OF TRANSPORTATION

R. Manzanarez
PROJECT ENGINEER

BRIDGE NO. 34-0006L/R
KILOMETER POST 13.2/13.9

CU 04
EA 0120F1

DISREGARD PRINTS BEARING EARLIER REVISION DATES 04/25/02 01/20/02 12/13/02

ORIGINAL SCALE IN MILLIMETERS FOR REDUCED PLANS 0 10 20 30 40 50 60 70 80 90 100

SAN FRANCISCO OAKLAND BAY BRIDGE
EAST SPAN SEISMIC SAFETY PROJECT
SELF-ANCHORED SUSPENSION BRIDGE
(SUPERSTRUCTURE & TOWER)

E2/E3 BIKEPATH TRAVELER MECHANICAL-01

REVISION DATES (PRELIMINARY STAGE ONLY)

SHEET 742R2 OF

FILE => I:\bb\04-0120F1\sas\contract plans and cco\cco\cco*24s1\2-revision 06-19-09\dgn\aktrv140.dgn

USERNAME => dwinrow DATE PLOTTED => 17 JUN 2009 TIME PLOTTED => 11:25:00

100 % PS&E

DIST.	COUNTY	ROUTE	KILOMETER POST TOTAL PROJECT	SHEET NO.	TOTAL SHEETS
04	SF	80	13.2/13.9	1159SIR1	1204

Caltrans Metric

REGISTERED ENGINEER - MECHANICAL

12-19-08

PLANS APPROVAL DATE

REGISTERED PROFESSIONAL ENGINEER Roupen Donikian No. C 56519 Exp. 06/30/09 CIVIL STATE OF CALIFORNIA

The State of California or its officers or agents shall not be responsible for the accuracy or completeness of electronic copies of this plan sheet.

T.Y. LIN / MOFFATT & NICHOL
825 BATTERY STREET
SAN FRANCISCO, CA 94111

Caltrans now has a web site! To get to the web site, go to: http://www.dot.ca.gov

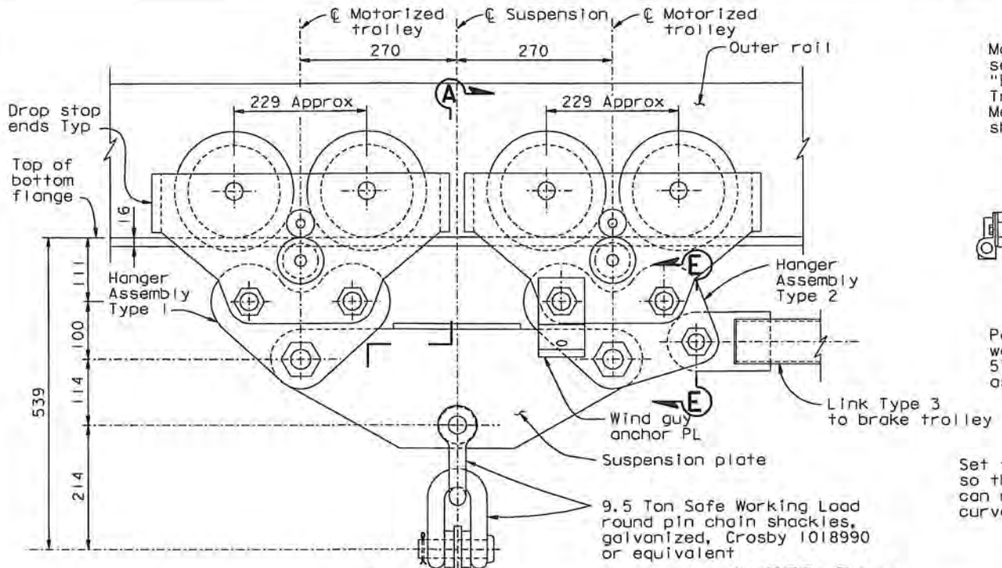

OUTER RAIL MOTORIZED TROLLEY DETAIL

1:5 (2 Required)

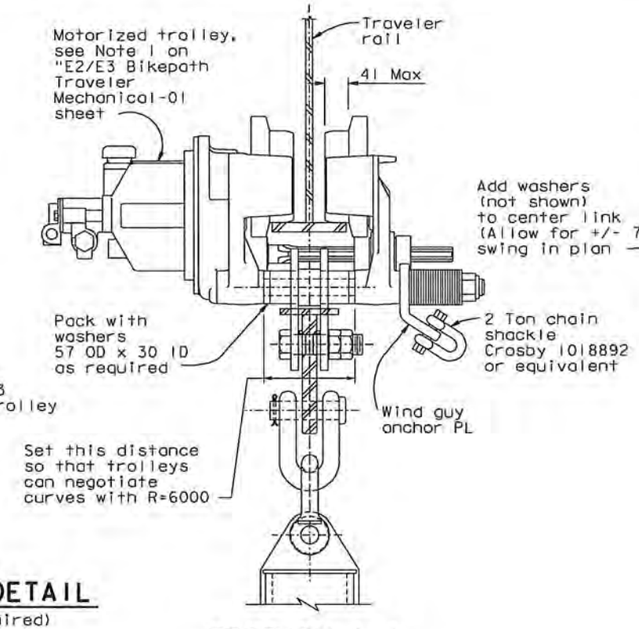

SECTION A-A

1:5

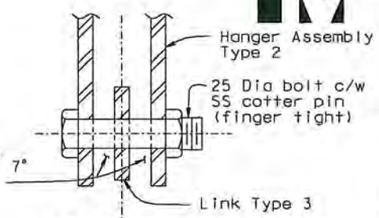

SECTION E-E

1:2.5

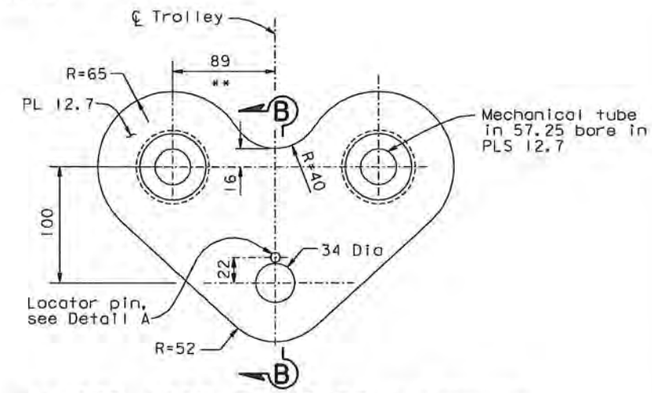

HANGER ASSEMBLY TYPE 1 (2 Required)

1:2.5

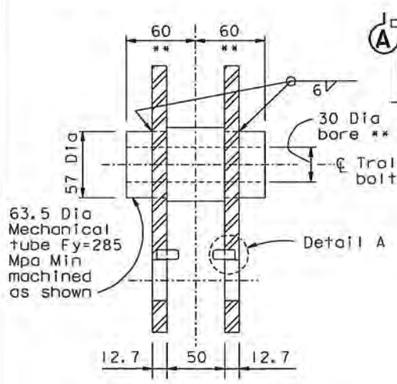

SECTION B-B

1:2.5

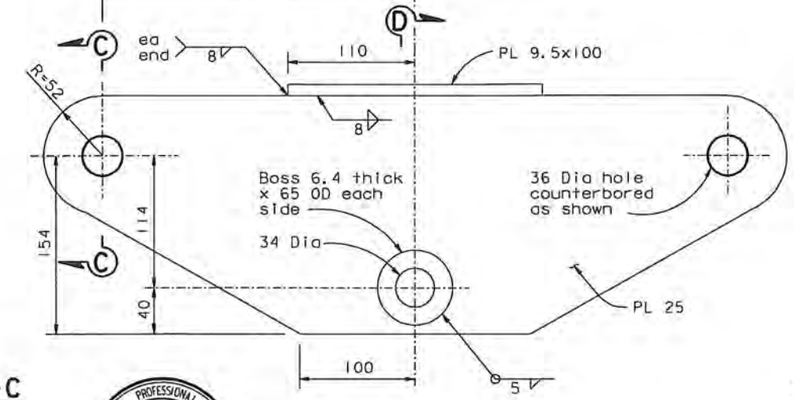

SUSPENSION PLATE

1:2.5

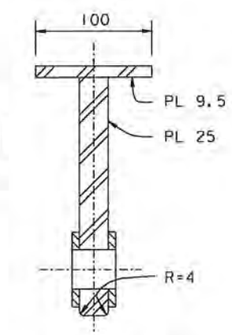

SECTION D-D

1:2.5

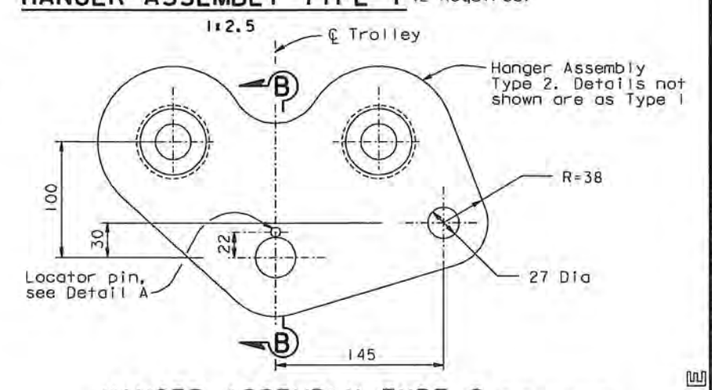

HANGER ASSEMBLY TYPE 2 (2 Required)

1:2.5

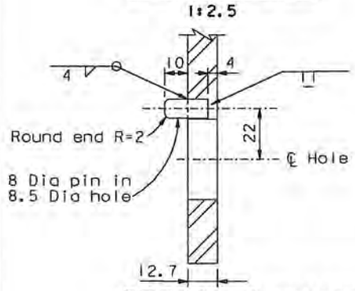

DETAIL A

1:1.25

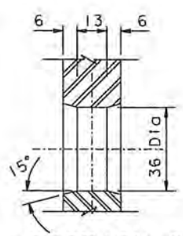

SECTION C-C

1:1.25

REGISTERED PROFESSIONAL ENGINEER Tien Hung Ho No. C 43990 Exp. 06/30/11 CIVIL STATE OF CALIFORNIA

FOR REVISION 1 ONLY

REVISION 1 SUPERSEDES REVISION 0 1

CONTRACT CHANGE ORDER NO. 2451
SHEET 102 OF 120

REQUESTS FOR INFORMATION NOT ADDRESSED IN THIS CCO REMAIN IN FORCE

NOTES:

1. Quantities given are per Bikepath Traveler.
2. For motorized trolleys, see Note 1 on "E2/E3 Bikepath Traveler Mechanical-01" sheet.

** Adjust dimensions noted thus to actual measured dimensions of motorized trolley.

ALL DIMENSIONS ARE IN MILLIMETERS UNLESS OTHERWISE SHOWN

MARK	DATE	DESCRIPTIONS	BY	CH'D	CCO#
1	06/19/09	TRAVELER MODIFICATINS	TH	AS	2451
0	07/20/07	RAIL CHANGE & MISCELLANEOUS DETAILS	BP	NV	24

REVISIONS RD NV

R. Vallzadeh/V. Toan/Y.L./W.L./F.C.
DESIGN OVERSIGHT
Roya Vallzadeh / Vang P. Toan / Y. Liu
SIGN OFF DATE 06/19/09

Rev. Date: 5-18-98

DESIGN	BY J. Otter	CHECKED R. Donikian	
DETAILS	BY J. Otter	CHECKED M. Roberts	
QUANTITIES	BY J. Otter	CHECKED R. Roberts	

PREPARED FOR THE STATE OF CALIFORNIA DEPARTMENT OF TRANSPORTATION

R. Manzanarez
PROJECT ENGINEER

BRIDGE NO. 34-0006L/R
KILOMETER POST 13.2/13.9

SAN FRANCISCO OAKLAND BAY BRIDGE
EAST SPAN SEISMIC SAFETY PROJECT
SELF-ANCHORED SUSPENSION BRIDGE
(SUPERSTRUCTURE & TOWER)

E2/E3 BIKEPATH TRAVELER MECHANICAL-01S1

ORIGINAL SCALE IN MILLIMETERS FOR REDUCED PLANS 0 10 20 30 40 50 60 70 80 90 100

CU 04
EA 0120F1

DISREGARD PRINTS BEARING EARLIER REVISION DATES 12/19/08

REVISION DATES (PRELIMINARY STAGE ONLY)

SHEET 742S1R1 OF

FILE => I:\bb\04-012001\sas\contract plans and cco\cco\cco#24s1\2-revision 06-19-09\dgn\aktrv140a.dgn

100 % PS&E

USERNAME => dwinrow DATE PLOTTED => 17 JUN 2009 TIME PLOTTED => 11:28:26

DIST.	COUNTY	ROUTE	KILOMETER POST TOTAL PROJECT	SHEET NO.	TOTAL SHEETS
04	SF	80	13.2/13.9	1160R2	1204

REGISTERED ENGINEER - MECHANICAL

12-6-04

PLANS APPROVAL DATE

PROFESSIONAL ENGINEER REGISTERED Roupen Donikian No. C 56519 Exp. 06/30/09 CIVIL STATE OF CALIFORNIA

The State of California or its officers or agents shall not be responsible for the accuracy or completeness of electronic copies of this plan sheet.

T.Y. LIN / MOFFATT & NICHOL
825 BATTERY STREET
SAN FRANCISCO, CA 94111

Caltrans now has a web site! To get to the web site, go to: http://www.dot.ca.gov

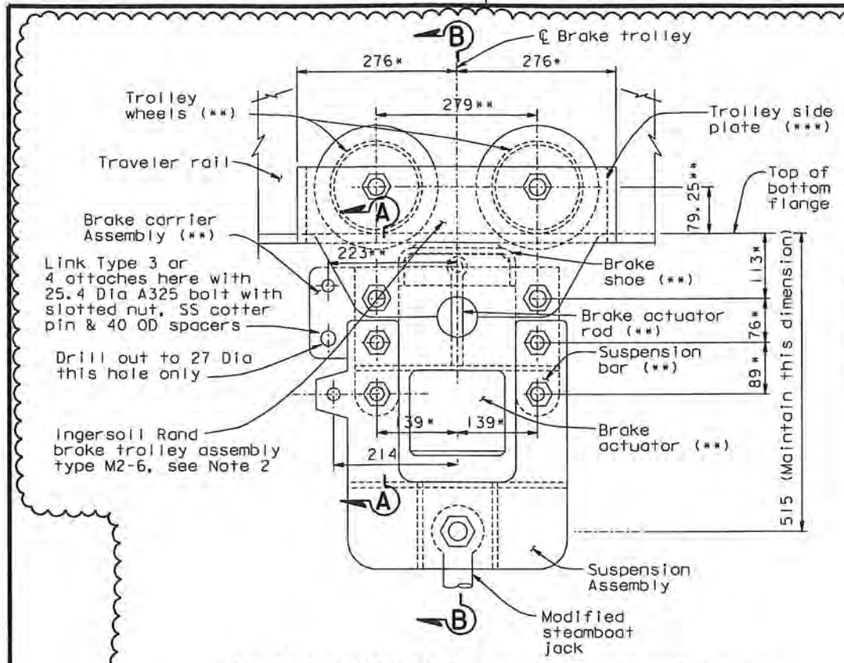

BRAKE TROLLEY ELEVATION (4 Required)

1:5 *See Note 3
**See Note 4

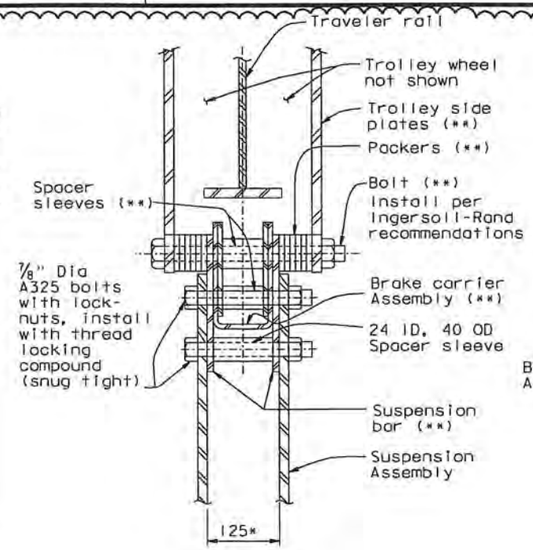

SECTION A-A

1:5 *See Note 3
**See Note 4

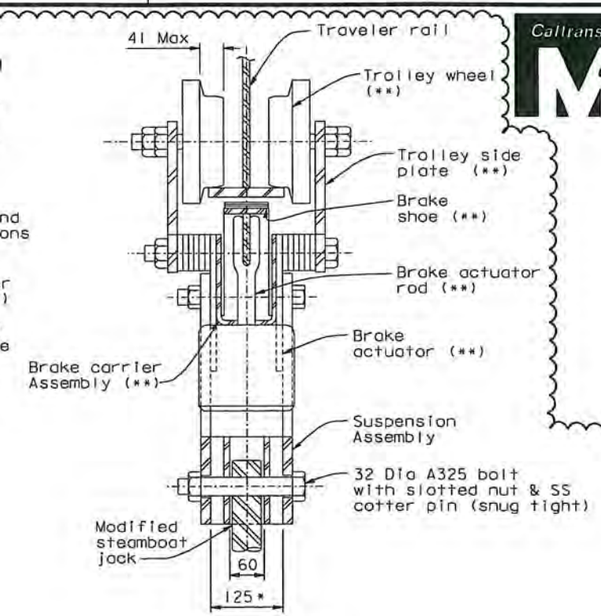

SECTION B-B

1:5 *See Note 3
**See Note 4

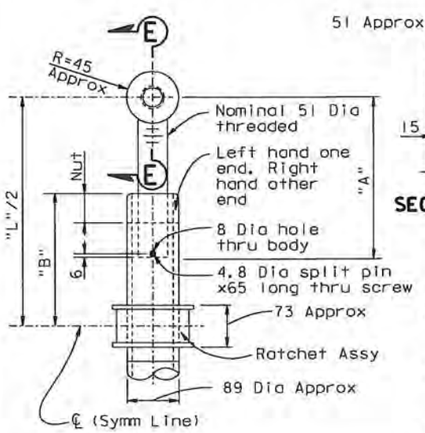

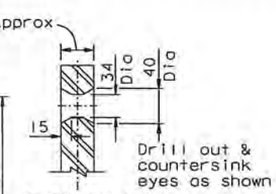

SECTION E-E

Type	No. Required	"A"	"B"	Length "L" Extended	Length "L" Retracted	Stroke
1	4	359	305	920 Min	760	160

Fabricate these jacks from Simplex ER 20, 20 Ton capacity steamboat jacks or equal. 2

MODIFIED STEAMBOAT JACKS

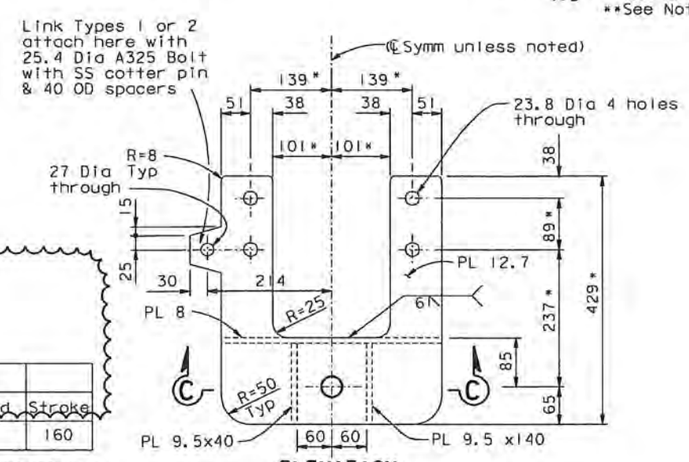

ELEVATION

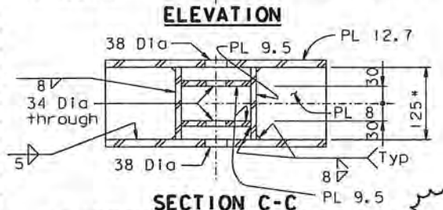

SECTION C-C
SUSPENSION ASSEMBLY

1:5 *See Note 3

NOTES:

1. The brake trolley assembly is designed to use Ingersoll-Rand proprietary brake trolley unit Type M2-6 XXX as the basis for this element, with added components for attachment of suspension etc.
2. Characteristics of the Ingersoll-Rand M2-6 trolleys shall be as follows
   a. Suitable for use on 127 mm flange width
   b. Utility Load rating (at 5:1 Factor of Safety)= 6000kg. per trolley.
   c. Brake to be air-release/spring-set type.
   d. Horizontal holding power of brake when "on" to be min. 275 kg per trolley.
   e. Wheels to be flat tread type. Max tread width=41 mm.
3. Dimensions indicated thus, *, are to be verified by the fabricator by measurement of the actual brake trolleys. Should actual dimensions differ from those shown, the fabricator shall adapt the dimensions shown to suit the actual dimensions. Fabricator is to advise the Engineer of all adaptations made & dimensions measured.
4. Components indicated thus, **, are sub-assembly components of the proprietary brake trolleys and are supplied as part of the brake trolleys. They are called out on this drawing for clarity for explanation.
5. Quantities given are per traveler.

PROFESSIONAL ENGINEER REGISTERED Tien Hung Ho No. C 43990 Exp. 06/30/11 CIVIL STATE OF CALIFORNIA

FOR REVISION 2 ONLY

2 REVISION 2 SUPERSEDES REVISION 1

CONTRACT CHANGE ORDER NO. 24S1
SHEET 103 OF 120

REQUESTS FOR INFORMATION NOT ADDRESSED IN THIS CCO REMAIN IN FORCE

ALL DIMENSIONS ARE IN MILLIMETERS UNLESS OTHERWISE SHOWN

MARK	DATE	DESCRIPTIONS	BY	CH'D	CCO#
2	06/19/09	TRAVELER MODIFICATIONS	TH	AS	24S1
1	07/20/07	RAIL CHANGE & MISCELLANEOUS DETAILS	RD	NV	24

REVISIONS

R. Vallzadeh/V. Toan/Y.L./W.L./F.C.
DESIGN OVERSIGHT
SIGN OFF DATE 06/18/09

DESIGN	BY J. Otter	CHECKED R. Donikian	
DETAILS	BY J. Otter	CHECKED R. Donikian	
QUANTITIES	BY J. Otter	CHECKED M. Roberts	

PREPARED FOR THE STATE OF CALIFORNIA DEPARTMENT OF TRANSPORTATION

R. Manzanarez
PROJECT ENGINEER

BRIDGE NO. 34-0006L/R
KILOMETER POST 13.2/13.9

CU 04
EA 0120F1

DISREGARD PRINTS BEARING EARLIER REVISION DATES

REVISION DATES (PRELIMINARY STAGE ONLY) 04/25/02 01/27/02 12/13/02

SAN FRANCISCO OAKLAND BAY BRIDGE
EAST SPAN SEISMIC SAFETY PROJECT
SELF-ANCHORED SUSPENSION BRIDGE
(SUPERSTRUCTURE & TOWER)

E2/E3 BIKEPATH TRAVELER MECHANICAL-02

SHEET 743R2 OF

Rev. Date: 5-18-98

ORIGINAL SCALE IN MILLIMETERS FOR REDUCED PLANS 0 10 20 30 40 50 60 70 80 90 100

FILE => I:\bb\04-012001\sas\contract plans and cco\cco\cco#24s1\2-revision 06-19-09\dgn\oktrv141.dgn

100 % PS&E

USERNAME => dwinrow DATE PLOTTED => 17 JUN 2009 TIME PLOTTED => 11:30:40

DIST.	COUNTY	ROUTE	KILOMETER POST TOTAL PROJECT	SHEET NO.	TOTAL SHEETS
04	SF	80	13.2/13.9	116IR3	1204

REGISTERED ENGINEER - MECHANICAL

12-6-04

PLANS APPROVAL DATE

The State of California or its officers or agents shall not be responsible for the accuracy or completeness of electronic copies of this plan sheet.

REGISTERED PROFESSIONAL ENGINEER Roupen Donikian No. C 56519 Exp. 06/30/09 CIVIL STATE OF CALIFORNIA

T.Y. LIN / MOFFATT & NICHOL
825 BATTERY STREET
SAN FRANCISCO, CA 94111

Caltrans now has a web site! To get to the web site, go to: http://www.dot.ca.gov

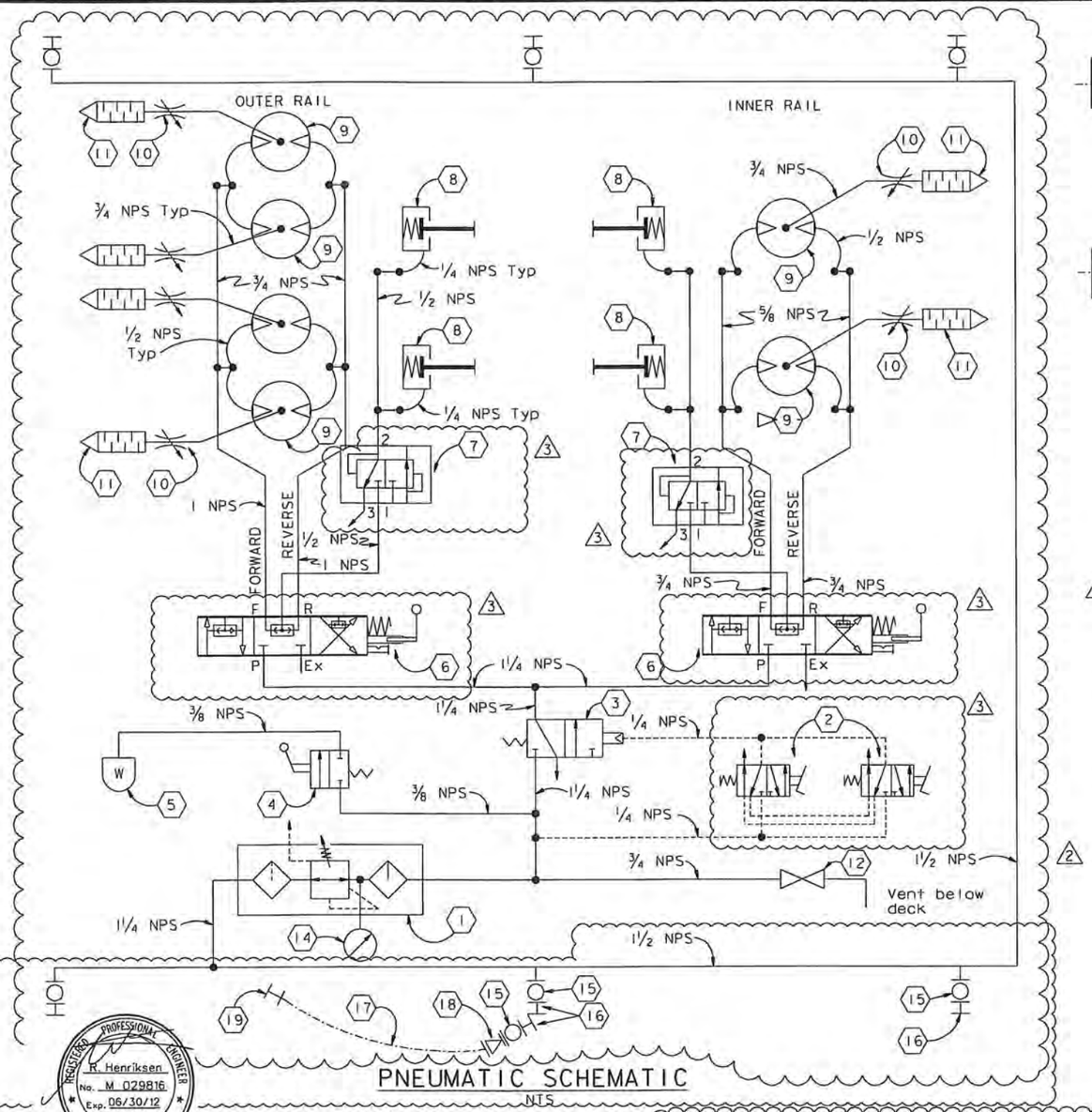

PNEUMATIC SCHEMATIC

NTS

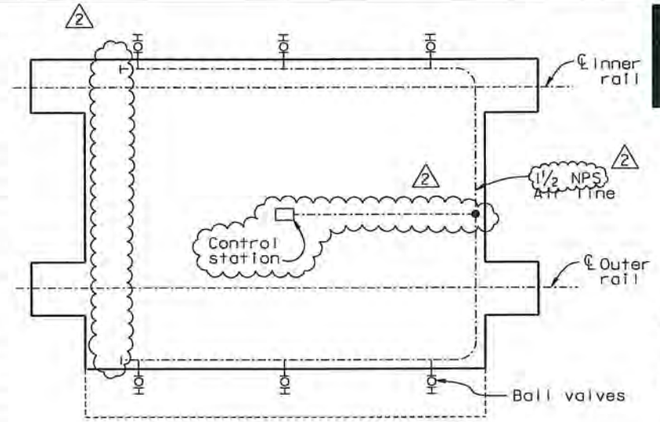

PNEUMATIC LAYOUT PLAN

NTS

NOTES:

1. All double check valves shall be installed horizontally.
2. All vents without silencers shall have a minimum of 300 mm of pipe and terminate with a screened downturned elbow.
3. Flexible hose not to exceed 750 mm in length may be used for final connections to equipment.

LEGEND:

Part	Description	Size	Quantity per Traveler
1	Lubricator, Filter, Pressure Regulator		1
2	Pedal operated Pilot Valve - To control Valve 3	1/4"	2
3	Main System control valve - Poppet Valve	1 1/4"	1
4	Whistle valve	3/8"	1
5	Whistle	—	1
6	Full Flow throttle Valve for Trolley motors	1 1/4"	2
7	Quick Dump Valve for Brakes	1/2"	2
8	Ingersoll Rand Parking Brake	—	4
9	Ingersoll Rand Motorized Trolley	—	6
10	Exhaust Choke Valve for speed control	3/4"	6
11	Silencer	—	6
12	Blow Down Valve	3/4"	1
13	Not Used		
14	Gage		1
15	Ball Valve	1 1/2"	10
16	Coupling	1 1/2"	7
17	Flexible Supply Hose - 8000 long	2"	4
18	Reducer - 2" to 1 1/2"		4
19	Boss B27 Wing Nut & GB26 Stem & Hose Clamp	2"	4

4. All pipe sizes are typical for similar locations.
5. On board rigid pipe to be SCHED 40.
6. Provide support to 1 1/2" pipe within 150 mm of each flexible hose connection and at 1800 intervals maximum.
7. Provide downturned elbow and reducer as required at each equipment connection.
8. Provide sufficient flexible connection hose to accomodate traveler movement (8000 mm length).
9. Mount throttle and whistle valves so as to be accessible by hand.
10. Mount pedal operated pilot valves (item 2 Dead Man Switch) so as to be operated by foot. One for operator facing east, one for operator facing west.
11. Provide weather cover for all controls.
12. Pneumatic schematics illustrate the principles of the pneumatic systems. System manufacturer is to: review pneumatic schematics; carry out detailed design of the system; make any detailed modifications necessary to ensure the proper operation of the systems.
13. Fabricator to design & supply a console for the control station using steel angle frame & plywood enclosure.
14. Traveler maximum operating speed 6.1 m/min (20 fpm) fully loaded going upgrade.
15. Anticipated air consumption at full speed is 25 scfm per trolley.
16. For valve item 6, use same valve type as will be used for the main trolley throttles on the SAS and E2/E3 travelers.

REGISTERED PROFESSIONAL ENGINEER R. Henriksen No. M 029816 Exp. 06/30/12 MECHANICAL STATE OF CALIFORNIA

FOR REVISION 3 ONLY

REGISTERED PROFESSIONAL ENGINEER Tien Hung Ho No. C 43990 Exp. 06/30/11 CIVIL STATE OF CALIFORNIA

FOR REVISION 2 ONLY

REVISION 2 SUPERSEDES REVISION 1

CONTRACT CHANGE ORDER NO. 24S1
SHEET 104 OF 120

REQUESTS FOR INFORMATION NOT ADDRESSED IN THIS CCO REMAIN IN FORCE

MARK	DATE	DESCRIPTIONS	BY	CH'D	CCO#
3	07/30/10	TRAVELER MODIFICATIONS	RH	RS	24S1
2	08/21/09	TRAVELER MODIFICATIONS	TH	AS	24S1
1	07/20/07	RAIL CHANGE & MISCELLANEOUS DETAILS	RD	NV	24

REVISIONS

R. Vallizadeh/V. Toan/Y.L./W.L./F.C.
DESIGN OVERSIGHT
SIGN OFF DATE 07/30/10

Rev. Date: 5-18-98

DESIGN BY J. Otter CHECKED R. Donikian
DETAILS BY J. Otter CHECKED R. Donikian
QUANTITIES BY J. Otter CHECKED M. Roberts

ORIGINAL SCALE IN MILLIMETERS FOR REDUCED PLANS 0 10 20 30 40 50 60 70 80 90 100

PREPARED FOR THE STATE OF CALIFORNIA DEPARTMENT OF TRANSPORTATION

R. Manzanarez
PROJECT ENGINEER

CU 04
EA 0120F1

BRIDGE NO. 34-0006L/R
KILOMETER POST 13.2/13.9

DISREGARD PRINTS BEARING EARLIER REVISION DATES

ALL DIMENSIONS ARE IN MILLIMETERS UNLESS OTHERWISE SHOWN

SAN FRANCISCO OAKLAND BAY BRIDGE
EAST SPAN SEISMIC SAFETY PROJECT
SELF-ANCHORED SUSPENSION BRIDGE
(SUPERSTRUCTURE & TOWER)

E2/E3 BIKEPATH TRAVELER AIR SYSTEM

REVISION DATES (PRELIMINARY STAGE ONLY) 01/25/02 01/27/02 12/13/02

SHEET 744R3 OF

FILE => I:\bb\04-0120F1\sas\contract plans and cco\cco\cco#24s1\9-update 07-30-10\dgn\aktrv142.dgn

100 % PS&E

USERNAME => gwinrow DATE PLOTTED => 03 AUG 2010 TIME PLOTTED => 11:49:58

DIST.	COUNTY	ROUTE	KILOMETER POST TOTAL PROJECT	SHEET NO.	TOTAL SHEETS
04	SF	80	13.2/13.9	116151	204

Caltrans Metric

REGISTERED ENGINEER - CIVIL

06-19-09

PLANS APPROVAL DATE

REGISTERED PROFESSIONAL ENGINEER Bashkim Prishtina No. C 053561 Exp. 6/30/11 CIVIL STATE OF CALIFORNIA

The State of California or its officers or agents shall not be responsible for the accuracy or completeness of electronic copies of this plan sheet.

T.Y. LIN / MOFFATT & NICHOL
825 BATTERY STREET
SAN FRANCISCO, CA 94111

Caltrans now has a web site! To get to the web site, go to: http://www.dot.ca.gov

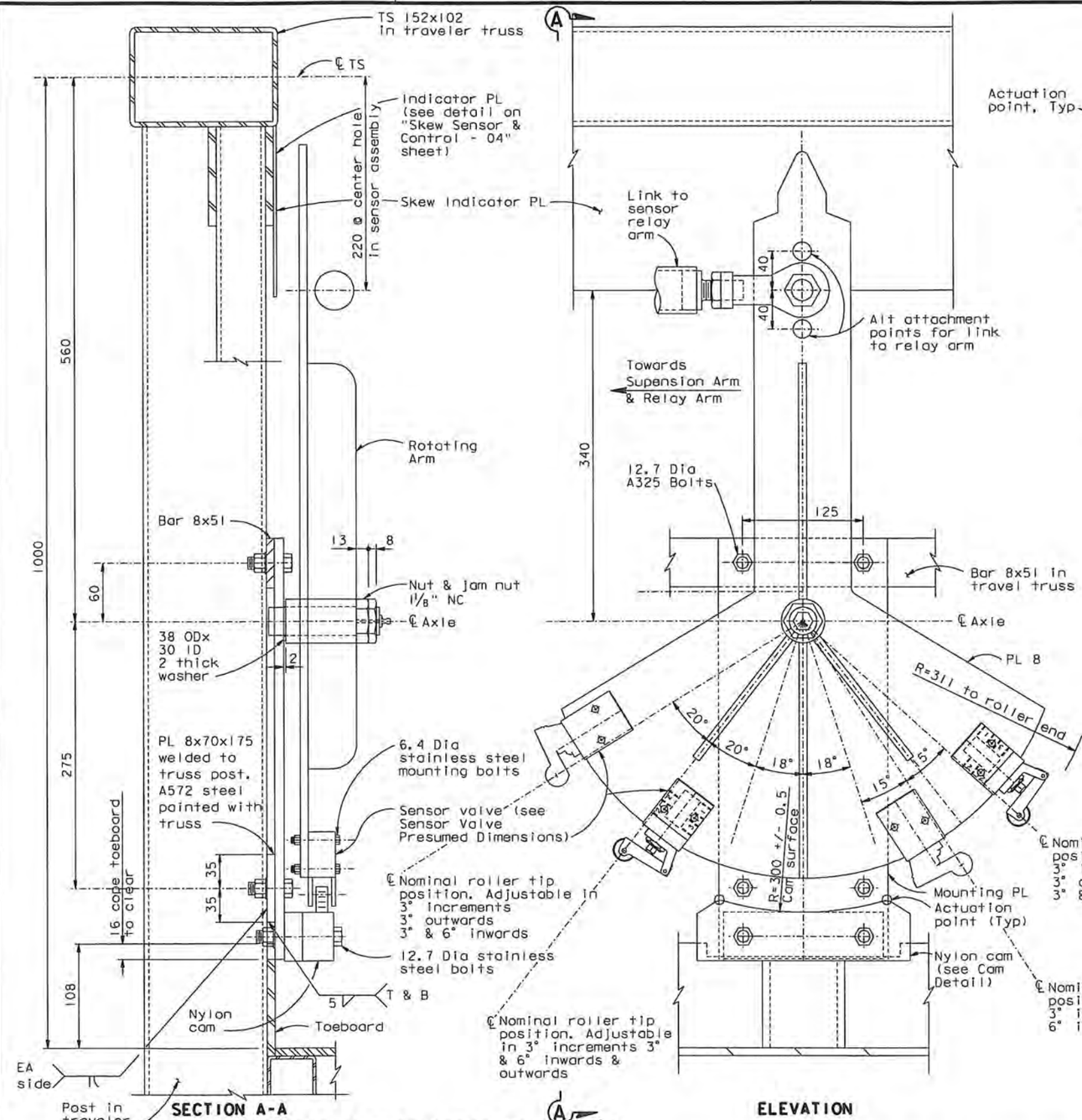

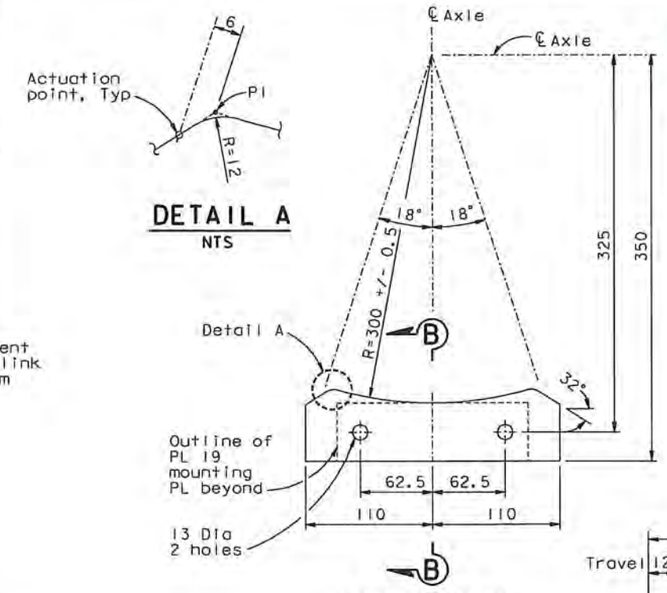

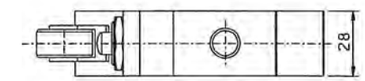

SECTION C-C

Valve is presumed activated @ 8 mm then overtravel = 4 mm. Total = 12 mm travel

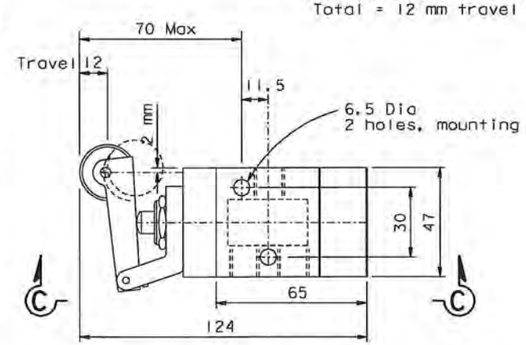

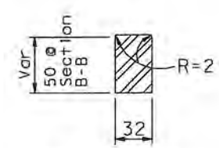

SECTION B-B

Mechanically activated spool valve, 3/2 function, 1/4" NPT ports with roller lever activation & spring return. Norgren 03-0611-22 or equivalent. Fabricator to verify dimensions, travel at actuation, and total travel to finalize detailing of the sensor assembly.

SENSOR VALVE PRESUMED DIMENSIONS

1:1.25

Notes:

1. For skew indicator plate see "Skew Sensor & Control - 04" sheet.
2. For details of mounting plate & rotating arm see "Skew Sensor & Control - 02" sheet.

CONTRACT CHANGE ORDER NO. A 24SI
SHEET 105 OF 120

REQUESTS FOR INFORMATION NOT ADDRESSED IN THIS CCO REMAIN IN FORCE

SKEW SENSOR ASSEMBLY & MOUNTING

1:2.5

ALL DIMENSIONS ARE IN MILLIMETERS UNLESS OTHERWISE SHOWN

MARK	DATE	DESCRIPTIONS	BY	CH'D	CCO#
0	06/19/09	TRAVELER MODIFICATIONS	BP	AS	24SI

REVISIONS

R. Vallizadeh/V. Toan/Y.L./W.L./F.C.
DESIGN OVERSIGHT
Ryan Vallizadeh / Vong Toan / Y. Liu
SIGN OFF DATE 06/19/09

Rev. Date: 5-18-98

DESIGN	BY J. Otter	CHECKED B. Prishtina	
DETAILS	BY J. Otter	CHECKED B. Prishtina	
QUANTITIES	BY J. Otter	CHECKED -	

PREPARED FOR THE STATE OF CALIFORNIA DEPARTMENT OF TRANSPORTATION

R. Manzanarez
PROJECT ENGINEER

BRIDGE NO. 34-0006L/R
KILOMETER POST 13.2/13.9

SAN FRANCISCO OAKLAND BAY BRIDGE
EAST SPAN SEISMIC SAFETY PROJECT
SELF-ANCHORED SUSPENSION BRIDGE (SUPERSTRUCTURE & TOWER)

SKEW SENSOR AND CONTROL - 01

ORIGINAL SCALE IN MILLIMETERS FOR REDUCED PLANS 0 10 20 30 40 50 60 70 80 90 100

CU 04
EA 0120F1

DISREGARD PRINTS BEARING EARLIER REVISION DATES 06/19/09

REVISION DATES (PRELIMINARY STAGE ONLY)

SHEET 744SI OF

FILE => I:\bb\04-012001\sas\contract plans and cco\cco\cco*24si\2-revision 06-19-09\dgn\aktrv150.dgn

USERNAME => dwinrow DATE PLOTTED => 17 JUN 2009 TIME PLOTTED => 11:32:36

100 % PS&E

DIST.	COUNTY	ROUTE	KILOMETER POST TOTAL PROJECT	SHEET NO.	TOTAL SHEETS
04	SF	80	13.2/13.9	1161S2	1204

REGISTERED ENGINEER - CIVIL

06-19-09

PLANS APPROVAL DATE

REGISTERED PROFESSIONAL ENGINEER Bashkim Prishtina No. C 053561 Exp. 6/30/11 CIVIL STATE OF CALIFORNIA

The State of California or its officers or agents shall not be responsible for the accuracy or completeness of electronic copies of this plan sheet.

T.Y. LIN / MOFFATT & NICHOL
825 BATTERY STREET
SAN FRANCISCO, CA 94111

Caltrans now has a web site! To get to the web site, go to: http://www.dot.ca.gov

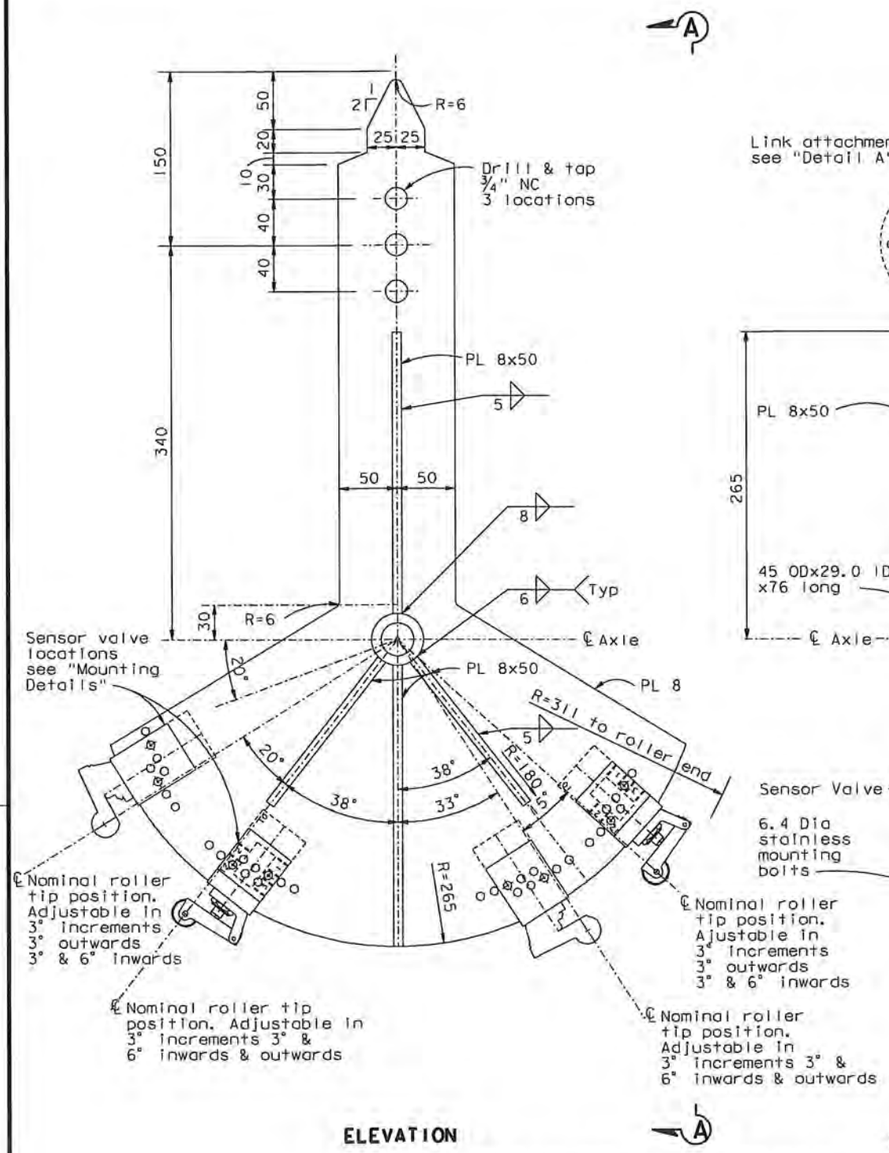

ELEVATION

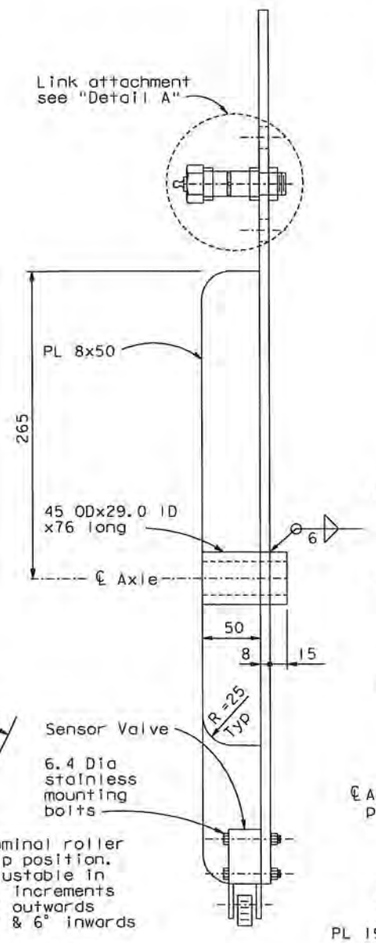

SECTION A-A

ROTATING PLATE DETAIL

1:2.5

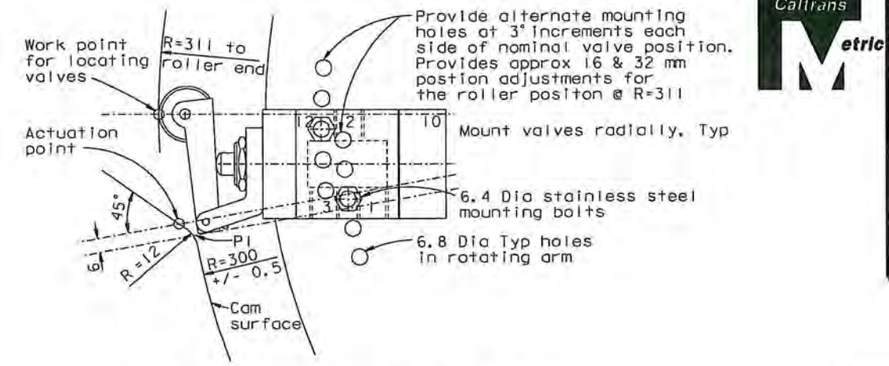

SENSOR VALVE MOUNTING DETAIL

1:1.25

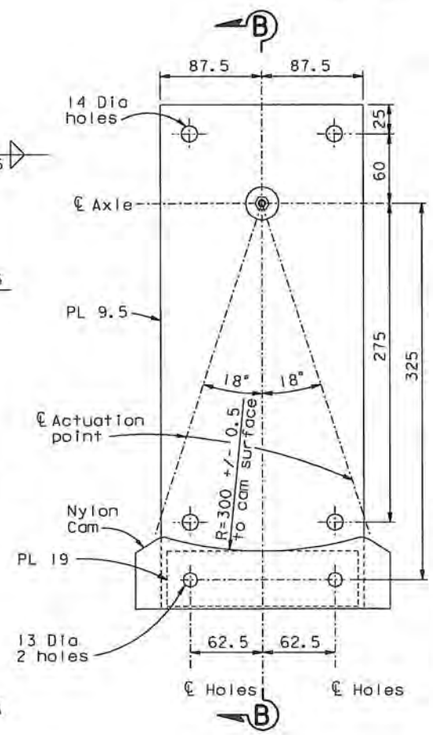

ELEVATION

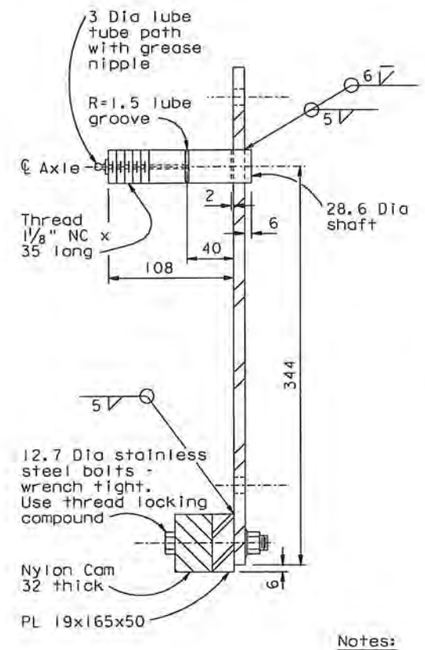

SECTION B-B

MOUNTING PLATE DETAIL

1:2.5

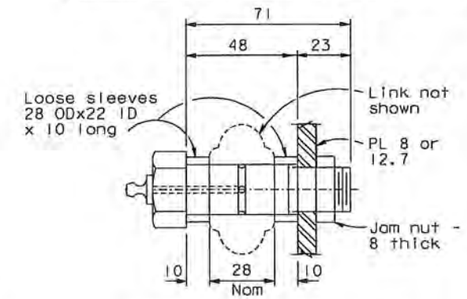

Use thread locking compound in threads

DETAIL A - ASSEMBLY

1:1.25

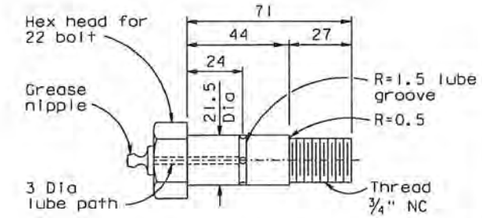

DETAIL A - BOLT DETAIL

1:1.25

Notes:

1. For cam details see "Skew Sensor and Control - 01" sheet.
2. For details and presumed dimensions of the sensor valves see "Skew Sensor and Control - 01" sheet.
3. All material type 316 stainless steel unless noted otherwise.

CONTRACT CHANGE ORDER NO. 24S1
SHEET 106 OF 120

REQUESTS FOR INFORMATION NOT ADDRESSED IN THIS CCO REMAIN IN FORCE

SKEW SENSOR COMPONENT DETAILS

ALL DIMENSIONS ARE IN MILLIMETERS UNLESS OTHERWISE SHOWN

R. Vallzadeh/V. Toan/Y.L./W.L./F.C.
DESIGN OVERSIGHT
SIGN OFF DATE 06/19/09

MARK	DATE	DESCRIPTIONS	BY	CH'D	CCO#
0	06/19/09	TRAVELER MODIFICATIONS	JO	BP	24S1

REVISIONS

	BY	CHECKED
DESIGN	J. Otter	B. Prishtina
DETAILS	J. Otter	B. Prishtina
QUANTITIES	J. Otter	-

PREPARED FOR THE STATE OF CALIFORNIA DEPARTMENT OF TRANSPORTATION

R. Manzanarez
PROJECT ENGINEER

BRIDGE NO. 34-0006L/R
KILOMETER POST 13.2/13.9

SAN FRANCISCO OAKLAND BAY BRIDGE
EAST SPAN SEISMIC SAFETY PROJECT
SELF-ANCHORED SUSPENSION BRIDGE
(SUPERSTRUCTURE & TOWER)

SKEW SENSOR AND CONTROL - 02

Rev. Date: 5-18-98

ORIGINAL SCALE IN MILLIMETERS FOR REDUCED PLANS 0 10 20 30 40 50 60 70 80 90 100

CU 04
EA 0120F1

DISREGARD PRINTS BEARING EARLIER REVISION DATES

REVISION DATES (PRELIMINARY STAGE ONLY) 06/19/09

SHEET 744S2 OF

FILE => I:\bb\04-01200I\sas\contract plans and cco\cco\cco#24s1\2-revision 06-19-09\dgn\oktrv151.dgn

100 % PS&E

USERNAME => dwinrow DATE PLOTTED => 17 JUN 2009 TIME PLOTTED => 11:34:38

SENSOR RELAY ARM DIMENSIONS			
	A	B	C
SAS EB	467	N/A	350
SAS WB	467	N/A	350
E2/E3 EB	470	296	261
E2 /E3 WB	420	269	234

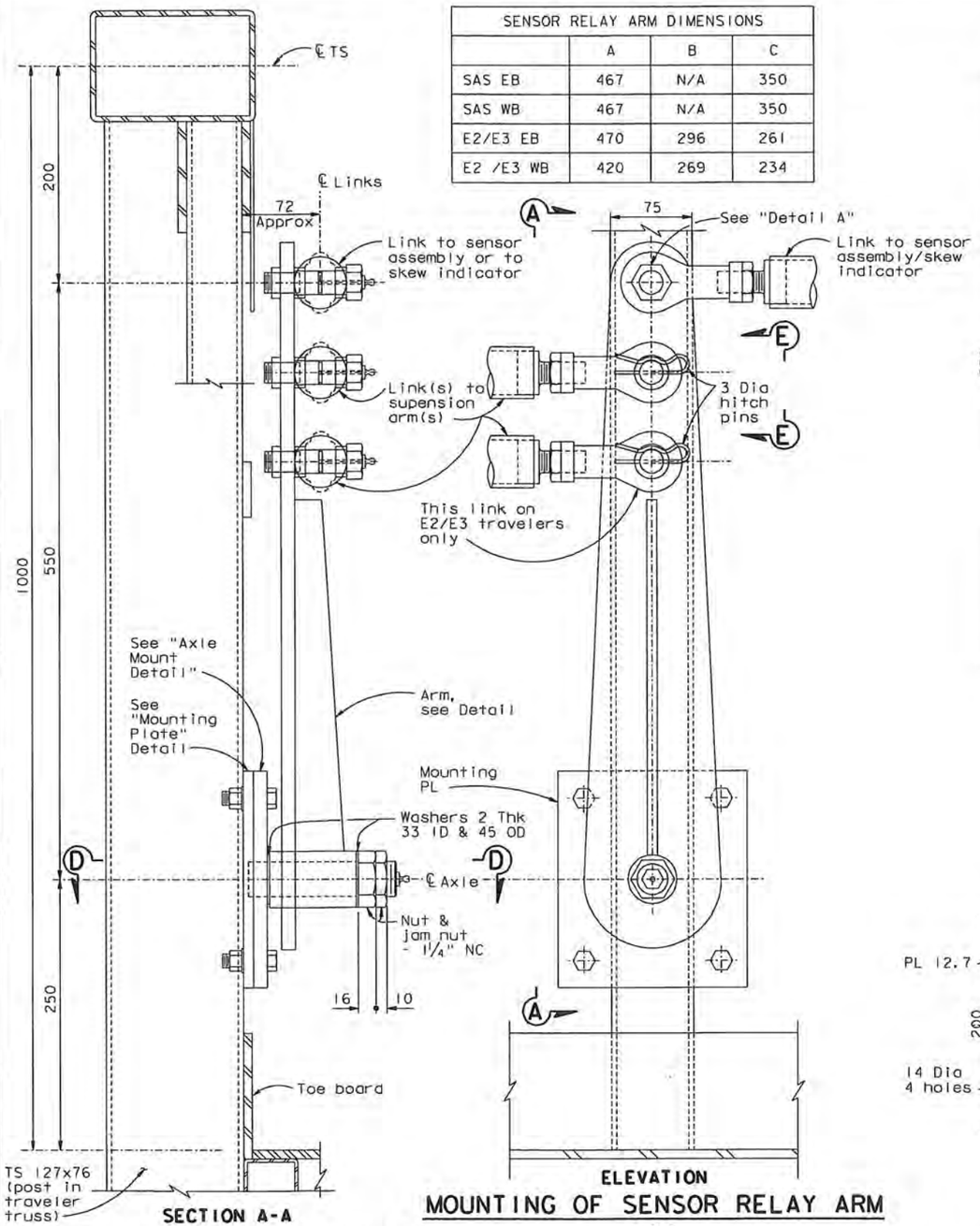

MOUNTING OF SENSOR RELAY ARM

1:2.5

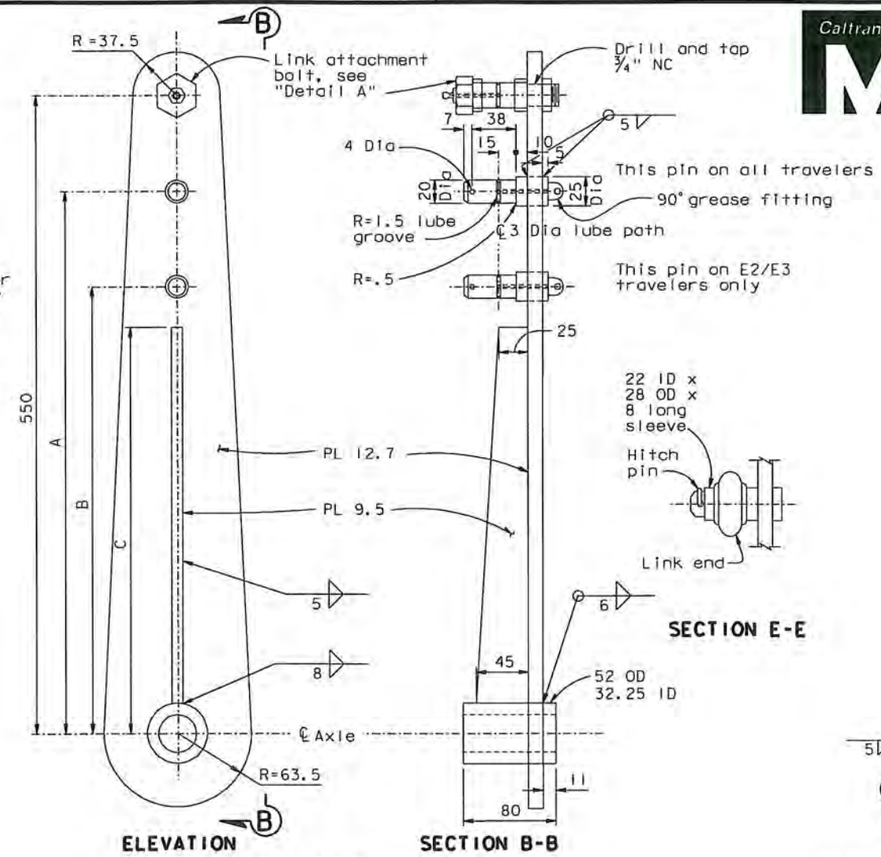

ARM DETAIL

1:2.5

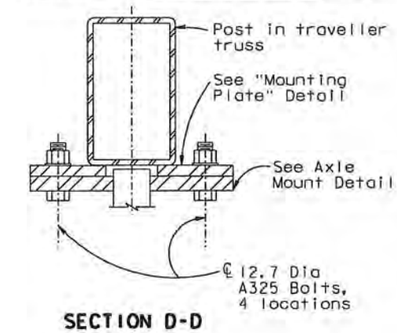

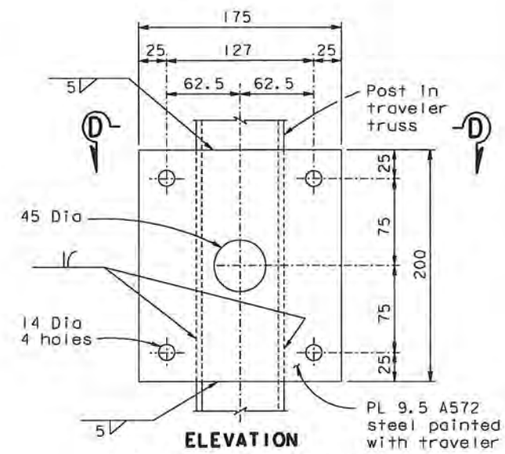

MOUNTING PLATE

1:2.5

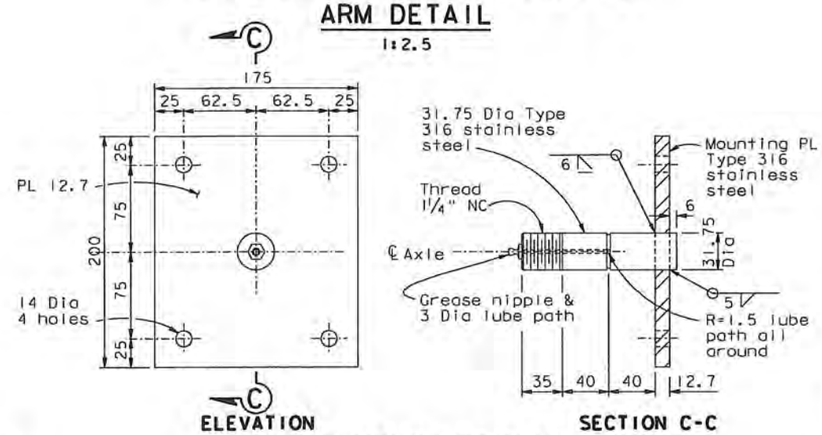

AXLE MOUNT DETAIL

1:2.5

Notes:

1. All material - Type 316 stainless steel UNO.
2. For Detail A see "Skew Sensor And Control - 02" sheet.

SENSOR RELAY ARM DETAILS

ALL DIMENSIONS ARE IN MILLIMETERS UNLESS OTHERWISE SHOWN

DIST.	COUNTY	ROUTE	KILOMETER POST TOTAL PROJECT	SHEET NO.	TOTAL SHEETS
04	SF	80	13.2/13.9	116153	1204

Caltrans Metric

REGISTERED ENGINEER - CIVIL

06-19-09

PLANS APPROVAL DATE

Bashkim Prishtina No. C 053561 Exp. 6/30/11 CIVIL — REGISTERED PROFESSIONAL ENGINEER — STATE OF CALIFORNIA

The State of California or its officers or agents shall not be responsible for the accuracy or completeness of electronic copies of this plan sheet.

T.Y. LIN / MOFFATT & NICHOL
825 BATTERY STREET
SAN FRANCISCO, CA 94111

Caltrans now has a web site! To get to the web site, go to: http://www.dot.ca.gov

CONTRACT CHANGE ORDER NO. 24S1
SHEET 107 OF 120

REQUESTS FOR INFORMATION NOT ADDRESSED IN THIS CCO REMAIN IN FORCE

R. Vallzadeh/V. Toan/Y.L./W.L./F.C.
DESIGN OVERSIGHT
SIGN OFF DATE 06/19/09

MARK	DATE	DESCRIPTIONS	BY	CH'D	CCO#
0	06/19/09	TRAVELER MODIFICATIONS	JO	BP	24S1

REVISIONS

DESIGN	BY J. Otter	CHECKED B. Prishtina	
DETAILS	BY J. Otter	CHECKED B. Prishtina	
QUANTITIES	BY J. Otter	CHECKED -	

PREPARED FOR THE STATE OF CALIFORNIA DEPARTMENT OF TRANSPORTATION

R. Manzanarez
PROJECT ENGINEER

BRIDGE NO. 34-0006L/R
KILOMETER POST 13.2/13.9

SAN FRANCISCO OAKLAND BAY BRIDGE
EAST SPAN SEISMIC SAFETY PROJECT
SELF-ANCHORED SUSPENSION BRIDGE
(SUPERSTRUCTURE & TOWER)

SKEW SENSOR AND CONTROL - 03

Rev. Date: 5-18-98

ORIGINAL SCALE IN MILLIMETERS FOR REDUCED PLANS 0 10 20 30 40 50 60 70 80 90 100

CU 04
EA 0120F1

DISREGARD PRINTS BEARING EARLIER REVISION DATES

REVISION DATES (PRELIMINARY STAGE ONLY) 06/19/09

SHEET 744S3 OF

FILE => I:\bb\04-0120F1\sas\contract plans and cco\cco\cco-24s1\2-revision 06-19-09\dgn\aktrv152.dgn

100 % PS&E

USERNAME => dwinrow DATE PLOTTED => 17 JUN 2009 TIME PLOTTED => 11:35:42

DIST.	COUNTY	ROUTE	KILOMETER POST TOTAL PROJECT	SHEET NO.	TOTAL SHEETS
04	SF	80	13.2/13.9	116154R1	1204

REGISTERED ENGINEER - CIVIL

06-19-09
PLANS APPROVAL DATE

REGISTERED PROFESSIONAL ENGINEER Boshkim Prishtina No. C 053561 Exp. 6/30/11 CIVIL STATE OF CALIFORNIA

The State of California or its officers or agents shall not be responsible for the accuracy or completeness of electronic copies of this plan sheet.

T.Y. LIN / MOFFATT & NICHOL
825 BATTERY STREET
SAN FRANCISCO, CA 94111

Caltrans now has a web site! To get to the web site, go to: http://www.dot.ca.gov

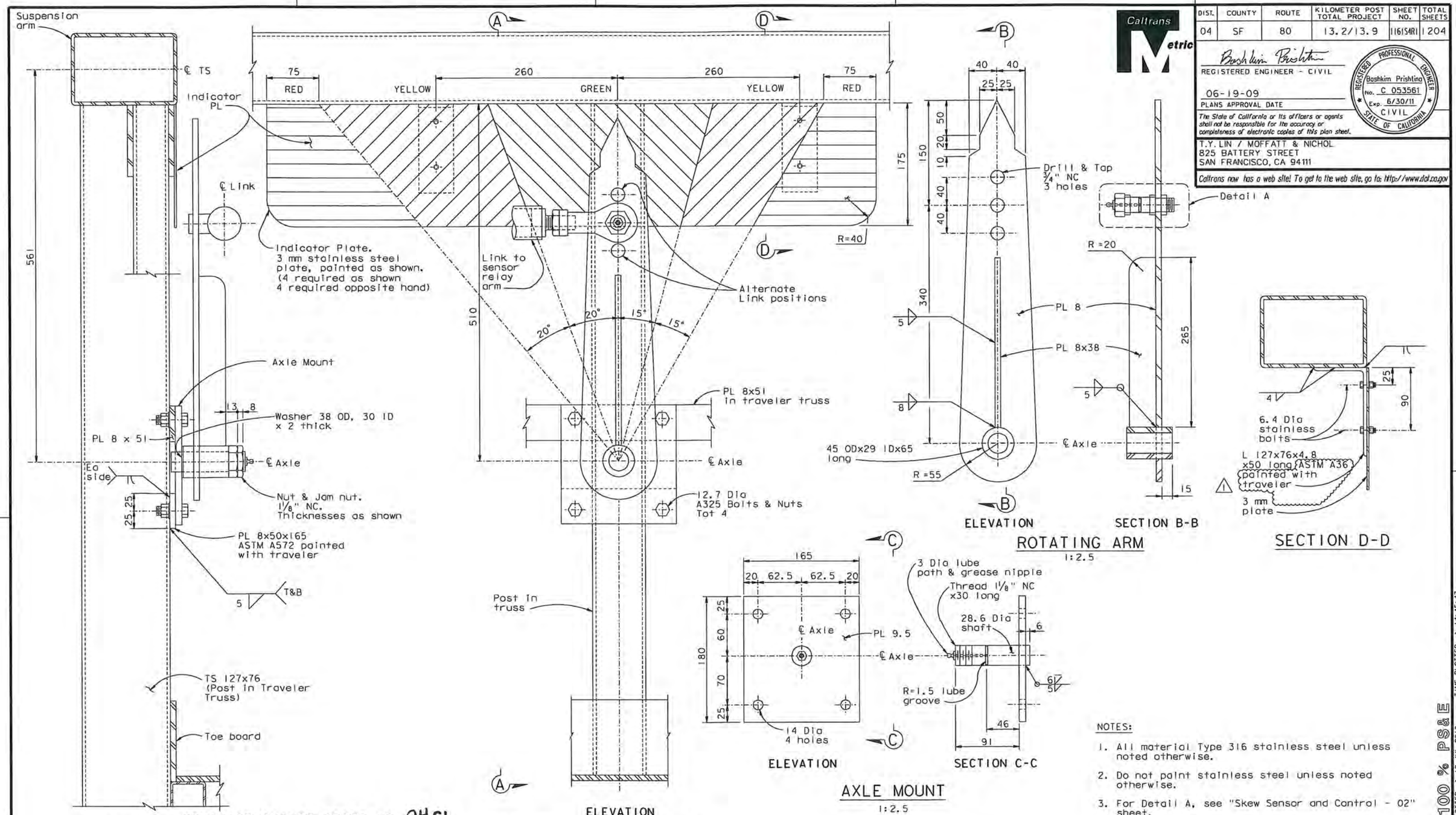

NOTES:

1. All material Type 316 stainless steel unless noted otherwise.
2. Do not paint stainless steel unless noted otherwise.
3. For Detail A, see "Skew Sensor and Control - 02" sheet.

CONTRACT CHANGE ORDER NO. 2451
SHEET 108 OF 120

REQUESTS FOR INFORMATION NOT ADDRESSED IN THIS CCO REMAIN IN FORCE

ALL DIMENSIONS ARE IN MILLIMETERS UNLESS OTHERWISE SHOWN

R. Vaizadeh/V. Toan/Y.L./W.L./F.C.
DESIGN OVERSIGHT
SIGN OFF DATE 07/09/10

MARK	DATE	DESCRIPTIONS	BY	CH'D	CCO#
1	07/09/10	TRAVELER MODIFICATIONS	JO	BP	2451
0	06/19/09	TRAVELER MODIFICATIONS	JO	BP	2451

REVISIONS

	BY	CHECKED
DESIGN	J. Otter	B. Prishtina
DETAILS	J. Otter	B. Prishtina
QUANTITIES	J. Otter	B. Prishtina

PREPARED FOR THE STATE OF CALIFORNIA DEPARTMENT OF TRANSPORTATION

R. Manzanarez
PROJECT ENGINEER

BRIDGE NO. 34-0006L/R
KILOMETER POST 13.2/13.9

SAN FRANCISCO OAKLAND BAY BRIDGE
EAST SPAN SEISMIC SAFETY PROJECT
SELF-ANCHORED SUSPENSION BRIDGE
(SUPERSTRUCTURE & TOWER)

SKEW SENSOR AND CONTROL - 04

Rev. Date: 5-18-98

ORIGINAL SCALE IN MILLIMETERS FOR REDUCED PLANS 0 10 20 30 40 50 60 70 80 90 100

CU 04
EA 0120F1

DISREGARD PRINTS BEARING EARLIER REVISION DATES 06/19/09

REVISION DATES (PRELIMINARY STAGE ONLY)

SHEET 744S4R1 OF

FILE => I:\bb\04-0120F1\sas\contract plans and cco\cco\cco*2451\7-revision 07-09-10\dgn\aktrv153.dgn

USERNAME => ariverd DATE PLOTTED => 12 JUL 2010 TIME PLOTTED => 14:45:47

100 % PS&E

DIST.	COUNTY	ROUTE	KILOMETER POST TOTAL PROJECT	SHEET NO.	TOTAL SHEETS
04	SF	80	13.2/13.9	116155	1204

Caltrans Metric

Bashkim Prishtina
REGISTERED ENGINEER - CIVIL
06-19-09
PLANS APPROVAL DATE

REGISTERED PROFESSIONAL ENGINEER Bashkim Prishtina No. C 053561 Exp. 6/30/11 CIVIL STATE OF CALIFORNIA

The State of California or its officers or agents shall not be responsible for the accuracy or completeness of electronic copies of this plan sheet.

T.Y. LIN / MOFFATT & NICHOL
825 BATTERY STREET
SAN FRANCISCO, CA 94111

Caltrans now has a web site! To get to the web site, go to: http://www.dot.ca.gov

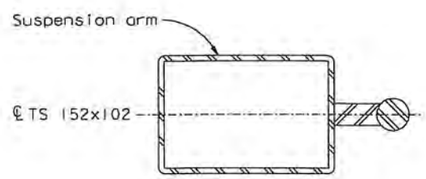

SECTION A-A

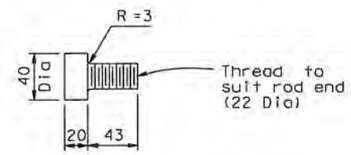

SPECIAL BOLT DETAIL

1:2.5

(Material - Type 316 stainless steel)

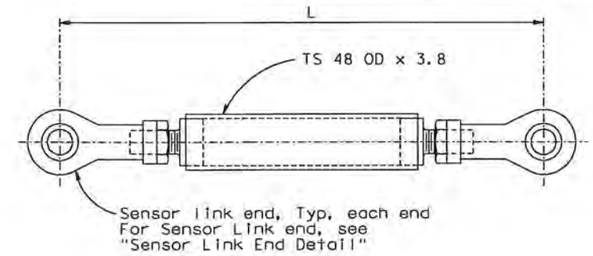

SENSOR LINK

1:2.5

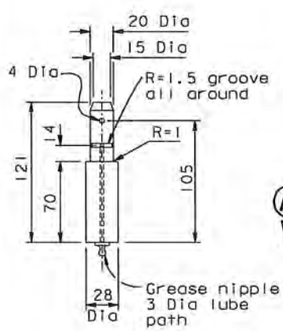

PIN DETAIL
Type 316 stainless steel

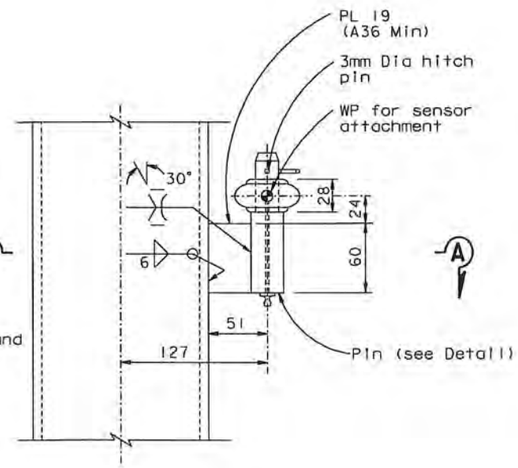

ELEVATION

SENSOR LINK ATTACHMENT TO SUSPENSION ARM

1:2.5

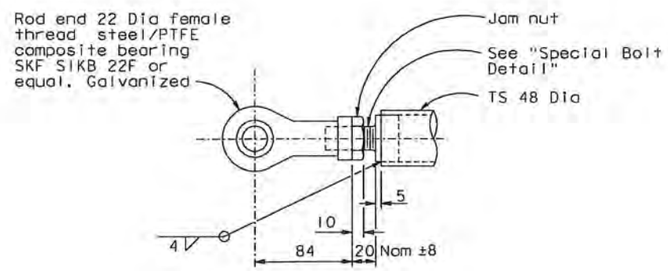

SENSOR LINK END DETAIL

1:2.5

SENSOR LINK			
LINK MARK	L	INSTALLATION LOCATION	NO REQUIRED
L1	2255	SAS EB	2
L2	3860	SAS EB	2
L3	2155	SAS WB	2
L4	3660	SAS WB	2
L5	3830	E2/E3 EB	2
L6	3265	E2/E3 EB	2
L7	2365	E2/E3 EB	2
L8	3830	E2/E3 WB	2
L9	3265	E2/E3 WB	2
L10	2365	E2/E3 WB	2

CONTRACT CHANGE ORDER NO. 2451
SHEET 109 OF 120

REQUESTS FOR INFORMATION NOT ADDRESSED IN THIS CCO REMAIN IN FORCE

ALL DIMENSIONS ARE IN MILLIMETERS UNLESS OTHERWISE SHOWN

100 % PS&E

R. Vallzadeh/V. Toan/Y.L./W.L./F.C.
DESIGN OVERSIGHT
Roya Vallzadeh / Vong P. Toan / Y. Liu
SIGN OFF DATE 08/21/09

MARK	DATE	DESCRIPTIONS	BY	CH'D	CCO#
0	08/21/09	TRAVELER MODIFICATIONS	JD	BP	2451

REVISIONS

	BY	CHECKED
DESIGN	J. Otter	B. Prishtina
DETAILS	J. Otter	B. Prishtina
QUANTITIES	J. Otter	

PREPARED FOR THE STATE OF CALIFORNIA DEPARTMENT OF TRANSPORTATION

R. Manzanarez
PROJECT ENGINEER

BRIDGE NO. 34-0006L/R
KILOMETER POST 13.2/13.9

SAN FRANCISCO OAKLAND BAY BRIDGE
EAST SPAN SEISMIC SAFETY PROJECT
SELF-ANCHORED SUSPENSION BRIDGE
(SUPERSTRUCTURE & TOWER)

SKEW SENSOR AND CONTROL - 05

Rev. Date: 5-18-98

ORIGINAL SCALE IN MILLIMETERS FOR REDUCED PLANS 0 10 20 30 40 50 60 70 80 90 100

CU 04
EA 0120F1

DISREGARD PRINTS BEARING EARLIER REVISION DATES → 06/15/09

REVISION DATES (PRELIMINARY STAGE ONLY)

SHEET 74455 OF

FILE => I:\bb\04-012001\sas\contract plans and cco\cco\cco#2451\3-revision 08-21-09\dgn\aktrv154.dgn

USERNAME => arlvera DATE PLOTTED => 21 AUG 2009 TIME PLOTTED => 14:36:36

DIST.	COUNTY	ROUTE	KILOMETER POST TOTAL PROJECT	SHEET NO.	TOTAL SHEETS
04	SF	80	13.2/13.9	1163S1	1204

Caltrans Metric

REGISTERED ENGINEER - CIVIL

06-19-09

PLANS APPROVAL DATE

REGISTERED PROFESSIONAL ENGINEER Tien Hung Ho No. C 43990 Exp. 06/30/11 CIVIL STATE OF CALIFORNIA

The State of California or its officers or agents shall not be responsible for the accuracy or completeness of electronic copies of this plan sheet.

T.Y. LIN / MOFFATT & NICHOL
825 BATTERY STREET
SAN FRANCISCO, CA 94111

Caltrans now has a web site! To get to the web site, go to: http://www.dot.ca.gov

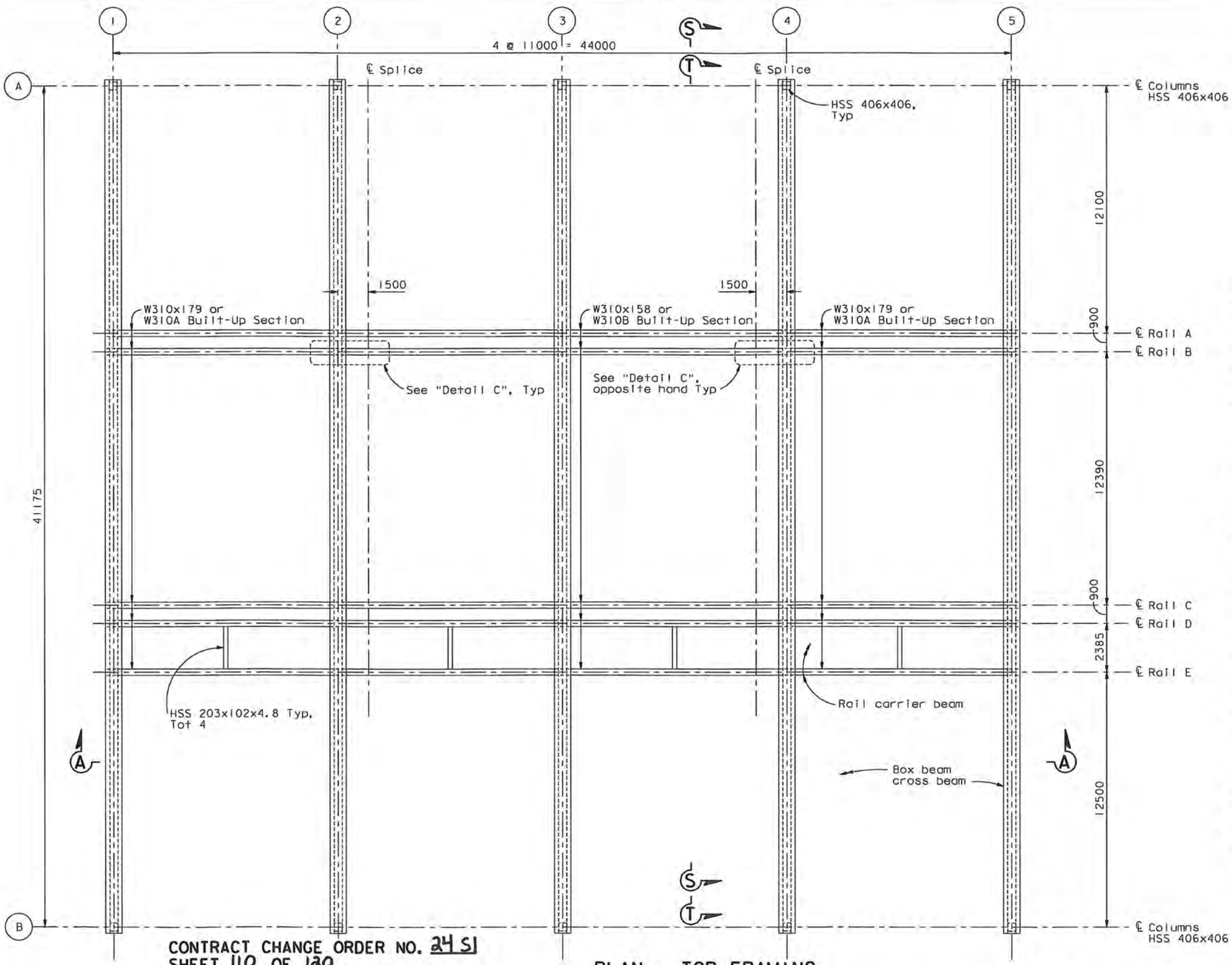

PLAN - TOP FRAMING

1:100

General Notes:

The soil under the concrete pads shall have a minimum allowable bearing capacity of 120 Kpa (2.5 kips/ft^2).

Structural Steel:

1. Steel construction shall be in accordance with "THE AISC CODE OF STANDARD PRACTICE FOR STEEL BUILDINGS AND BRIDGES", Dated March 15, 2005.
2. Structural steel for rolled wide flange sections, plates and built-up sections shall conform to ASTM A572 or A709 Grade 50 (Fy = 345 MPa). Hollow structural sections (HSS) shall conform to ASTM A500 Gr.B (Fy=317 MPa). Rolled angles shall conform to ASTM A36, or approved equal.
3. Bolts for Structural steel shall conform to ASTM A325 and THE AISC SPECIFICATION FOR STRUCTURAL JOINTS USING ASTM A325 OR A490 BOLTS, JUNE 30, 2004, unless otherwise noted on the plans.
4. Welding shall conform to ASW D1.1/D1.1M-2002.
5. Rail shall be hot dip galvanized per specification.
6. Tension rod, turnbuckle with clevises and/or hooks shall have a minimum ultimate tension strength, UTS = 200 kN (45 kips). Fabricator to propose details.
7. Denotes flush filled flare bevel weld with a minimum effective throat of 5/8 x wall thickness of tube section.

Reinforced Concrete:

1. Concrete shall have a minimum ultimate compressive strength fc' = 21 MPa (3,000 psi) at 28 days.
2. Reinforcing steel shall be ASTM A615, fy = 414 MPa (60 ksi).
3. Grout or drypack mortar shall be non-shrinkage and have a minimum ultimate compressive strength fc' = 21 MPa (3,000) psi.

LEGEND:

Rail A - For E2/E3 EB/Skyway

Rail B - For E2/E3 EB/SAS & SAS EB

Rail C - For E2/E3 EB/SAS

Rail D - For E2/E3 EB/Skyway

Rail E - For SAS EB

100 % PS&E

CONTRACT CHANGE ORDER NO. 24S1
SHEET 110 OF 120

REQUESTS FOR INFORMATION NOT ADDRESSED IN THIS CCO REMAIN IN FORCE

ALL DIMENSIONS ARE IN MILLIMETERS UNLESS OTHERWISE SHOWN

R. Valizadeh/V. Toan/Y. L./W. L./F. C.
DESIGN OVERSIGHT
Roya Valizadeh / Vang P. Toan / Y. Liu
SIGN OFF DATE 06/19/09

MARK	DATE	DESCRIPTIONS	BY	CH'D	CCO#
0	06/19/09	TRAVELER MODIFICATIONS	TH	AS	24S1

REVISIONS

DESIGN BY T. Ho CHECKED J. Otter
DETAILS BY Y. Hsu CHECKED A. Sanjines
QUANTITIES BY Y. Hsu CHECKED J. Otter

PREPARED FOR THE STATE OF CALIFORNIA DEPARTMENT OF TRANSPORTATION

R. Manzanarez
PROJECT ENGINEER

BRIDGE NO. 34-0006L/R
KILOMETER POST 13.2/13.9

SAN FRANCISCO OAKLAND BAY BRIDGE
EAST SPAN SEISMIC SAFETY PROJECT
SELF-ANCHORED SUSPENSION BRIDGE
(SUPERSTRUCTURE & TOWER)

TRAVELER TESTING RACK NO. 1

Rev. Date: 5-18-98

ORIGINAL SCALE IN MILLIMETERS FOR REDUCED PLANS 0 10 20 30 40 50 60 70 80 90 100

CU 04
EA 0120F1

DISREGARD PRINTS BEARING EARLIER REVISION DATES

REVISION DATES (PRELIMINARY STAGE ONLY) 05/15/09

SHEET 746S1 OF

FILE => I:\bb\04-0120F1\sas\contract plans and cco\cco\cco#24s1\2-revision 06-19-09\dgn\aktrv155s1.dgn

USERNAME => dwinrow DATE PLOTTED => 17 JUN 2009 TIME PLOTTED => 11:38:39

DIST.	COUNTY	ROUTE	KILOMETER POST TOTAL PROJECT	SHEET NO.	TOTAL SHEETS
04	SF	80	13.2/13.9	116352	1204

REGISTERED ENGINEER - CIVIL

06-19-09

PLANS APPROVAL DATE

REGISTERED PROFESSIONAL ENGINEER Tien Hung Ho No. C 43990 Exp. 06/30/11 CIVIL STATE OF CALIFORNIA

The State of California or its officers or agents shall not be responsible for the accuracy or completeness of electronic copies of this plan sheet.

T.Y. LIN / MOFFATT & NICHOL
825 BATTERY STREET
SAN FRANCISCO, CA 94111

Caltrans now has a web site! To get to the web site, go to: http://www.dot.ca.gov

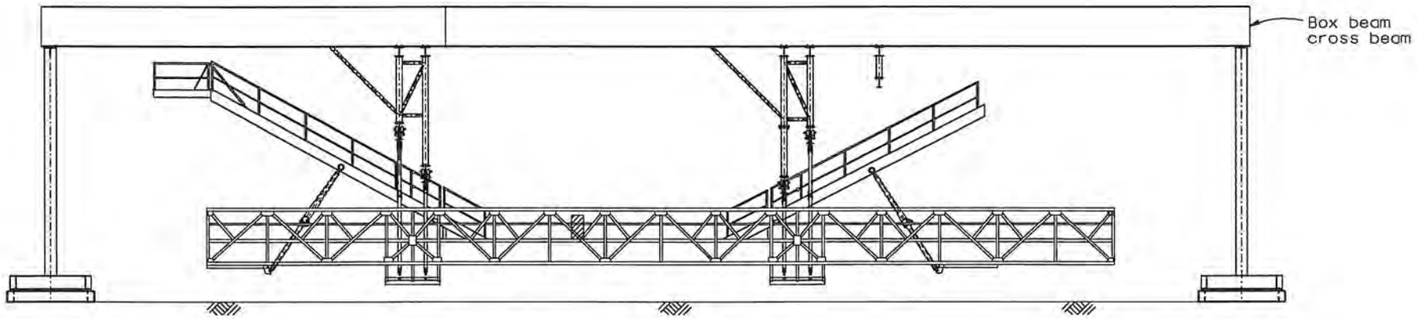

TESTING E2/E3 EB
SECTION S-S
1:100

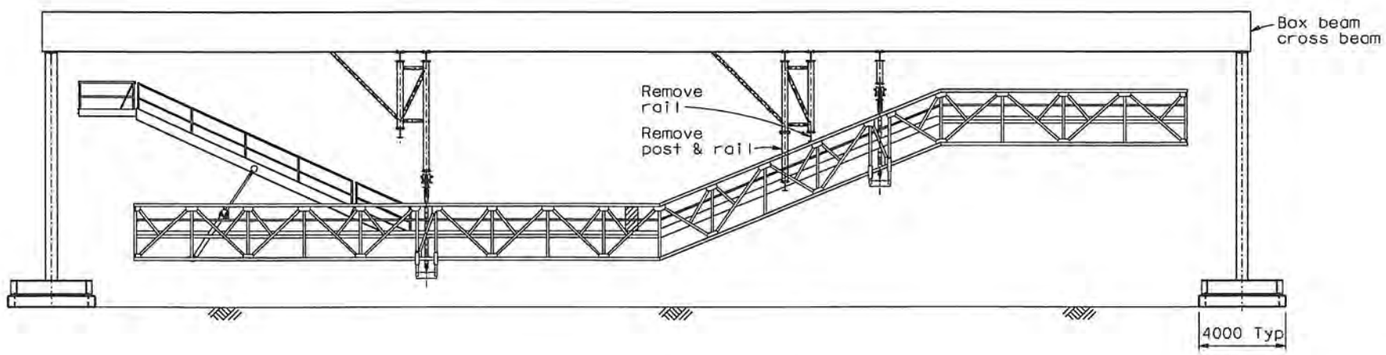

TESTING SAS EB
SECTION T-T
1:100

NOTES:

1. Fabricator to propose splice details for the box beam cross beam if splices are desired.
2. Fabricator may propose alternatives to the box beam cross beam if such an alternative would be more economical.

Critical Design Loads:

1. Vertical: self weight and

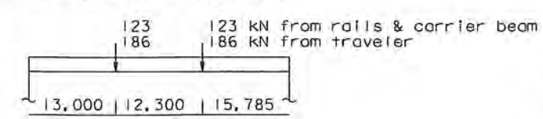

2. Horizontal: 10% of dead load plus
10% of traveler load

CONTRACT CHANGE ORDER NO. 24S1
SHEET 111 OF 120

REQUESTS FOR INFORMATION NOT ADDRESSED IN THIS CCO REMAIN IN FORCE

ALL DIMENSIONS ARE IN MILLIMETERS UNLESS OTHERWISE SHOWN

R. Valizadeh/V. Toan/Y.L./W.L./F.C.
DESIGN OVERSIGHT
SIGN OFF DATE 06/19/09

MARK	DATE	DESCRIPTIONS	BY	CH'D	CCO#
0	06/19/09	TRAVELER MODIFICATIONS	TH	AS	24S1

REVISIONS

DESIGN	BY T. Ho	CHECKED J. Otter	
DETAILS	BY Y. Hsu	CHECKED A. Sanjines	
QUANTITIES	BY Y. Hsu	CHECKED J. Otter	

PREPARED FOR THE STATE OF CALIFORNIA DEPARTMENT OF TRANSPORTATION

R. Manzanarez
PROJECT ENGINEER

BRIDGE NO. 34-0006L/R
KILOMETER POST 13.2/13.9

SAN FRANCISCO OAKLAND BAY BRIDGE
EAST SPAN SEISMIC SAFETY PROJECT
SELF-ANCHORED SUSPENSION BRIDGE
(SUPERSTRUCTURE & TOWER)

TRAVELER TESTING RACK NO. 2

Rev. Date: 5-18-98

ORIGINAL SCALE IN MILLIMETERS FOR REDUCED PLANS 0 10 20 30 40 50 60 70 80 90 100

CU 04
EA 0120F1

DISREGARD PRINTS BEARING EARLIER REVISION DATES 06/19/09

REVISION DATES (PRELIMINARY STAGE ONLY)

SHEET 746S2 OF

FILE => I:\bb\04-012001\sas\contract plans and cco\cco\cco#24s1\2-revision 06-19-09\dgn\aktrv155s2.dgn

100 % PS&E

USERNAME => dwinrow DATE PLOTTED => 17 JUN 2009 TIME PLOTTED => 11:39:41

DIST.	COUNTY	ROUTE	KILOMETER POST TOTAL PROJECT	SHEET NO.	TOTAL SHEETS
04	SF	80	13.2/13.9	1163S3	1204

REGISTERED ENGINEER - CIVIL

06-19-09

PLANS APPROVAL DATE

REGISTERED PROFESSIONAL ENGINEER Tien Hung Ho No. C 43990 Exp. 06/30/11 CIVIL STATE OF CALIFORNIA

The State of California or its officers or agents shall not be responsible for the accuracy or completeness of electronic copies of this plan sheet.

T.Y. LIN / MOFFATT & NICHOL
825 BATTERY STREET
SAN FRANCISCO, CA 94111

Caltrans now has a web site! To get to the web site, go to: http://www.dot.ca.gov

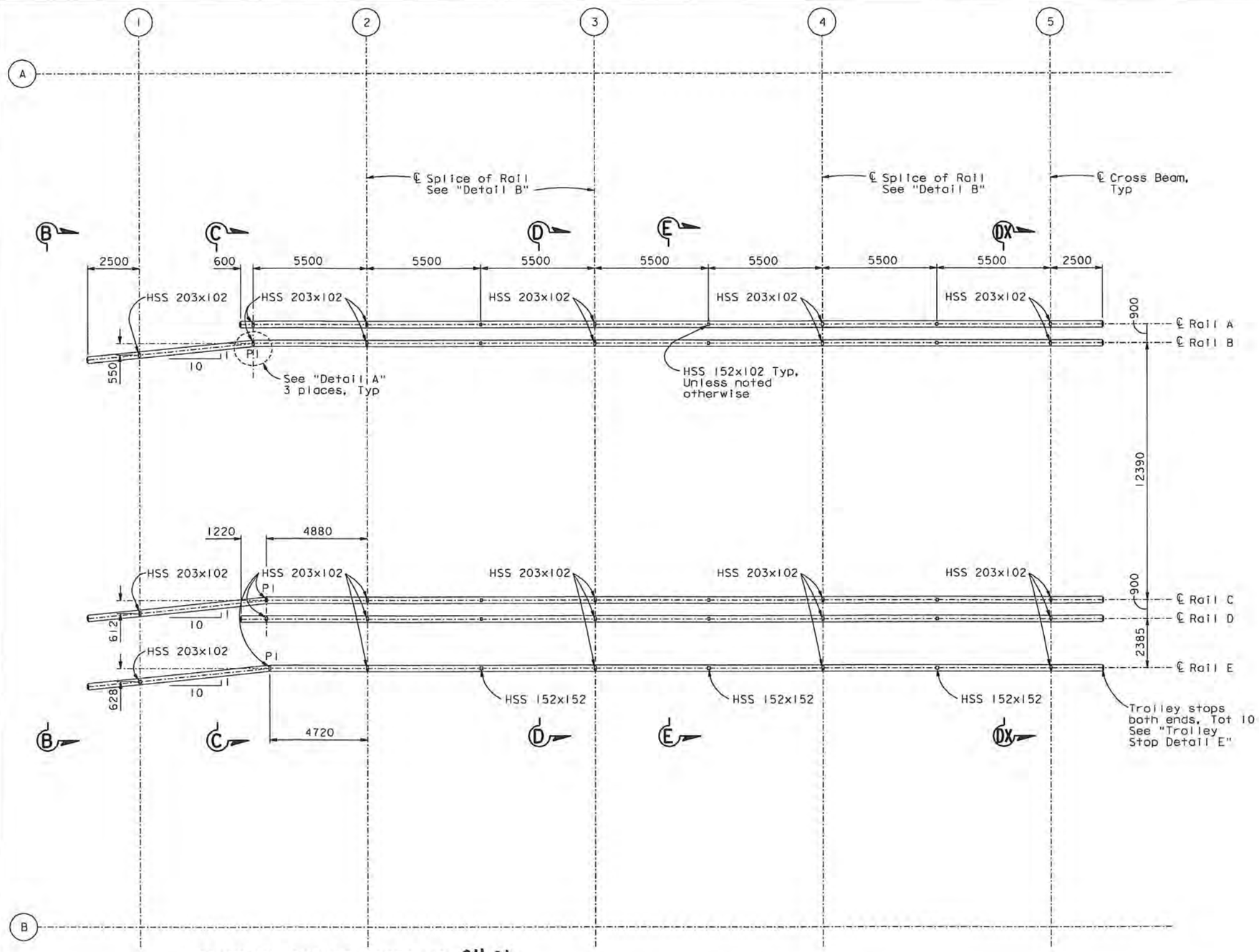

PLAN AT TOP OF RAILS

1:100

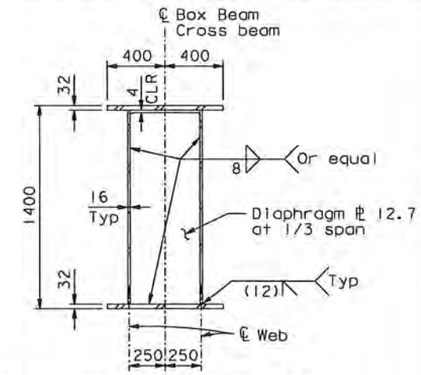

TYPICAL BOX BEAM CROSS BEAM

1:20

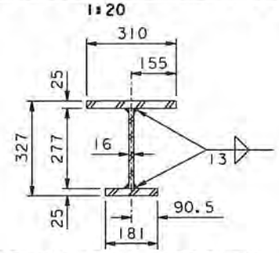

TYPICAL RAIL SECTION

1:10

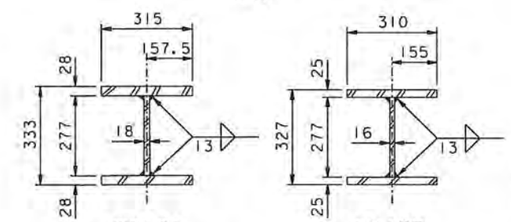

W310A W310B

RAIL CARRIER BEAMS

1:10

BUILT-UP SECTIONS

CONTRACT CHANGE ORDER NO. 24S1
SHEET 112 OF 120

REQUESTS FOR INFORMATION NOT ADDRESSED IN THIS CCO REMAIN IN FORCE

ALL DIMENSIONS ARE IN MILLIMETERS UNLESS OTHERWISE SHOWN

R. Valizadeh/V. Toan/Y. L./W. L./F. C.
DESIGN OVERSIGHT
SIGN OFF DATE 06/19/09

MARK	DATE	DESCRIPTIONS	BY	CH'D	CCO#
0	06/19/09	TRAVELER MODIFICATIONS	TH	AS	24S1

REVISIONS

DESIGN	BY T. Ho	CHECKED J. Otter	
DETAILS	BY Y. Hsu	CHECKED A. Sanjines	
QUANTITIES	BY Y. Hsu	CHECKED J. Otter	

PREPARED FOR THE STATE OF CALIFORNIA DEPARTMENT OF TRANSPORTATION

R. Manzanarez
PROJECT ENGINEER

BRIDGE NO. 34-0006L/R
KILOMETER POST 13.2/13.9

SAN FRANCISCO OAKLAND BAY BRIDGE
EAST SPAN SEISMIC SAFETY PROJECT
SELF-ANCHORED SUSPENSION BRIDGE
(SUPERSTRUCTURE & TOWER)

TRAVELER TESTING RACK NO. 3

Rev. Date: 5-18-98

ORIGINAL SCALE IN MILLIMETERS FOR REDUCED PLANS 0 10 20 30 40 50 60 70 80 90 100

CU 04
EA 0120F1

DISREGARD PRINTS BEARING EARLIER REVISION DATES

REVISION DATES (PRELIMINARY STAGE ONLY) 06/19/09

SHEET 746S3 OF

FILE => I:\bb\04-012001\sas\contract plans and cco\cco\cco#24s1\2-revision 06-19-09\dgn\aktrv155s3.dgn

100 % PS&E

USERNAME => dwinrow DATE PLOTTED => 17 JUN 2009 TIME PLOTTED => 11:41:11

DIST.	COUNTY	ROUTE	KILOMETER POST TOTAL PROJECT	SHEET NO.	TOTAL SHEETS
04	SF	80	13.2/13.9	116354	1204

Caltrans Metric

REGISTERED ENGINEER - CIVIL

06-19-09

PLANS APPROVAL DATE

REGISTERED PROFESSIONAL ENGINEER Tien Hung Ho No. C 43990 Exp. 06/30/11 CIVIL STATE OF CALIFORNIA

The State of California or its officers or agents shall not be responsible for the accuracy or completeness of electronic copies of this plan sheet.

T.Y. LIN / MOFFATT & NICHOL
825 BATTERY STREET
SAN FRANCISCO, CA 94111

Caltrans now has a web site! To get to the web site, go to: http://www.dot.ca.gov

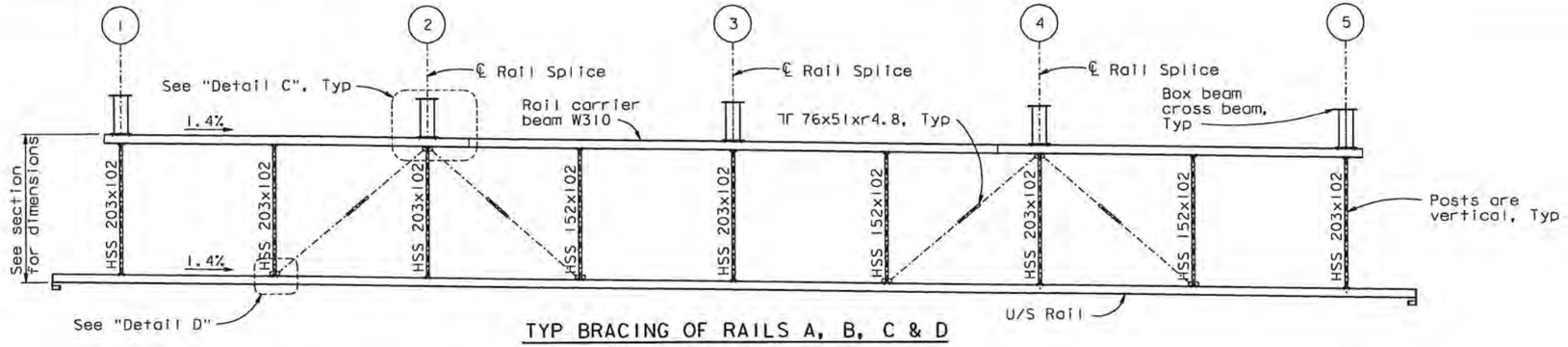

TYP BRACING OF RAILS A, B, C & D

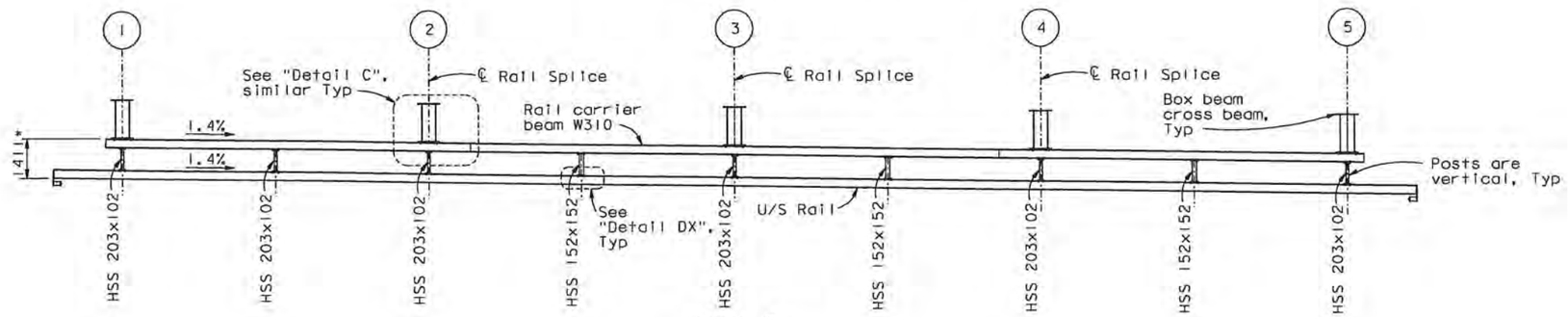

Rail E

ELEVATION A-A For splice of rail see "Detail B"

1:100

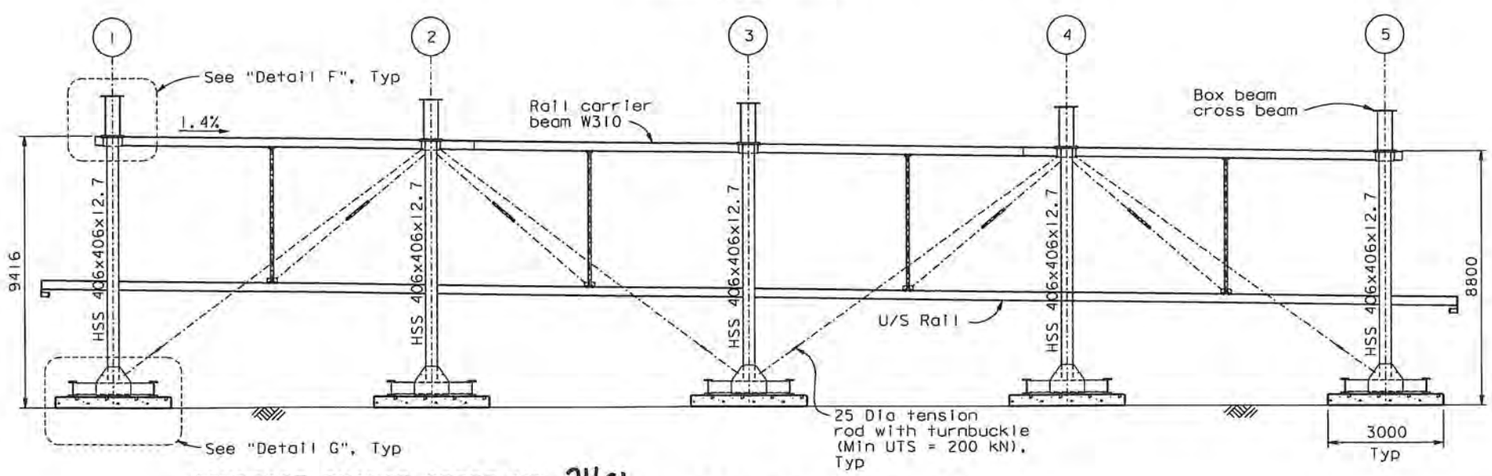

COLUMN ELEVATION

1:100

NOTE:

* Dimensions to the top of rail carrier beam W310

CONTRACT CHANGE ORDER NO. 24S1
SHEET 113 OF 120

REQUESTS FOR INFORMATION NOT ADDRESSED IN THIS CCO REMAIN IN FORCE

ALL DIMENSIONS ARE IN MILLIMETERS UNLESS OTHERWISE SHOWN

100 % PS&E

R. Valizadeh/V. Toan/Y.L./W.L./F.C.
DESIGN OVERSIGHT
Roya Valizadeh / Vang P. Toan / Y. Liu
SIGN OFF DATE 06/19/09

MARK	DATE	DESCRIPTIONS	BY	CH'D	CCO#
0	06/19/09	TRAVELER MODIFICATIONS	TH	AS	24S1

REVISIONS

DESIGN	BY T. Ho	CHECKED J. Otter	
DETAILS	BY Y. Hsu	CHECKED A. Sanjines	
QUANTITIES	BY Y. Hsu	CHECKED J. Otter	

PREPARED FOR THE STATE OF CALIFORNIA DEPARTMENT OF TRANSPORTATION

R. Manzanarez
PROJECT ENGINEER

BRIDGE NO. 34-0006L/R
KILOMETER POST 13.2/13.9

SAN FRANCISCO OAKLAND BAY BRIDGE
EAST SPAN SEISMIC SAFETY PROJECT
SELF-ANCHORED SUSPENSION BRIDGE
(SUPERSTRUCTURE & TOWER)

TRAVELER TESTING RACK NO. 4

Rev. Date: 5-18-98

ORIGINAL SCALE IN MILLIMETERS FOR REDUCED PLANS 0 10 20 30 40 50 60 70 80 90 100

CU 04
EA 0120F1

DISREGARD PRINTS BEARING EARLIER REVISION DATES → 06/19/09

REVISION DATES (PRELIMINARY STAGE ONLY)

SHEET 746S4 OF

FILE => I:\bb\04-012001\sas\contract plans and cco\cco\cco*24s1\2-revision 06-19-09\dgn\aktrv155s4.dgn

USERNAME => dwinrow DATE PLOTTED => 17 JUN 2009 TIME PLOTTED => 11:42:08

DIST.	COUNTY	ROUTE	KILOMETER POST TOTAL PROJECT	SHEET NO.	TOTAL SHEETS
04	SF	80	13.2/13.9	116355	1204

REGISTERED ENGINEER - CIVIL

06-19-09

PLANS APPROVAL DATE

REGISTERED PROFESSIONAL ENGINEER Tien Hung Ho No. C 43990 Exp. 06/30/11 CIVIL STATE OF CALIFORNIA

The State of California or its officers or agents shall not be responsible for the accuracy or completeness of electronic copies of this plan sheet.

T.Y. LIN / MOFFATT & NICHOL
825 BATTERY STREET
SAN FRANCISCO, CA 94111

Caltrans now has a web site! To get to the web site, go to: http://www.dot.ca.gov

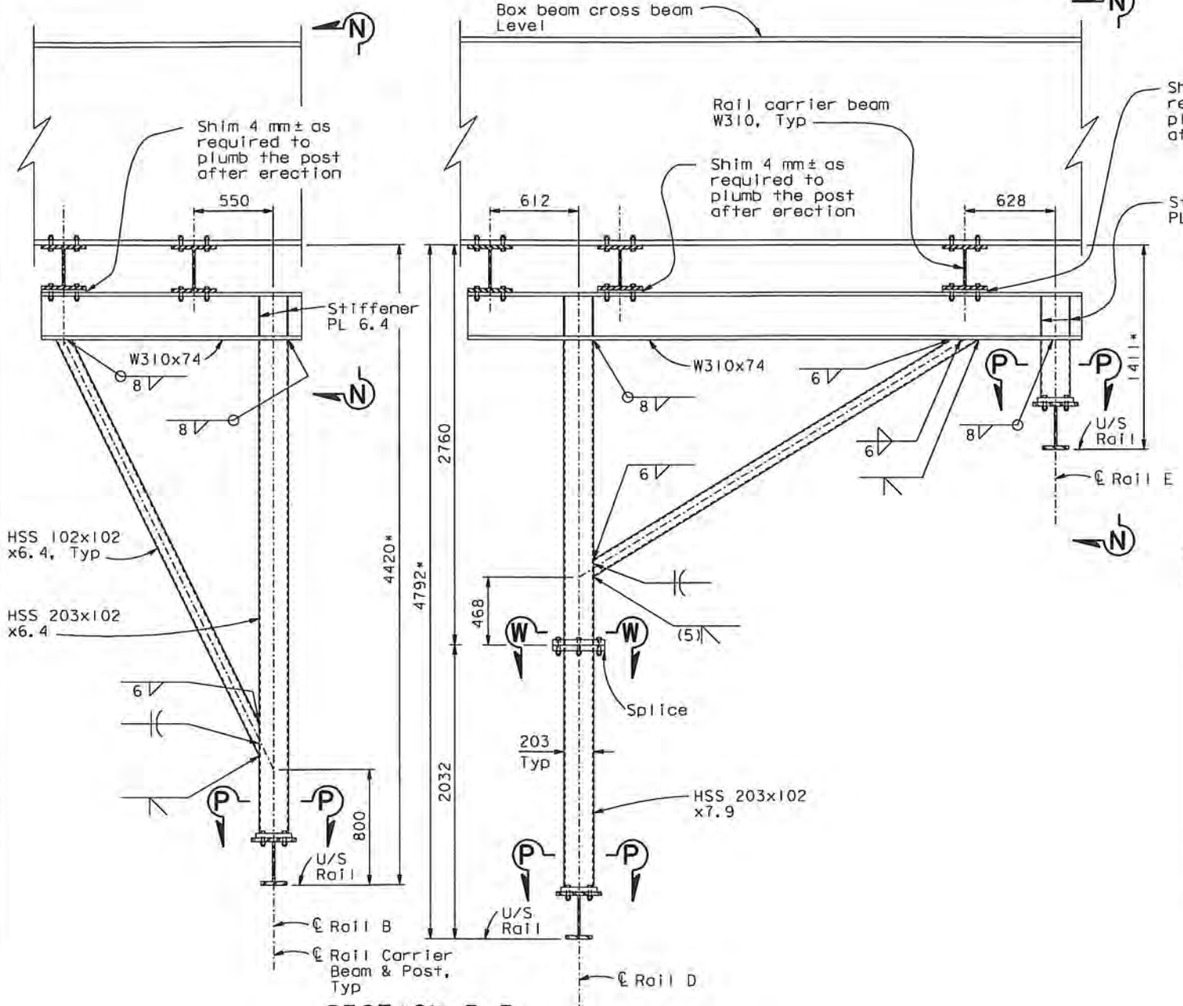

SECTION B-B

1:20

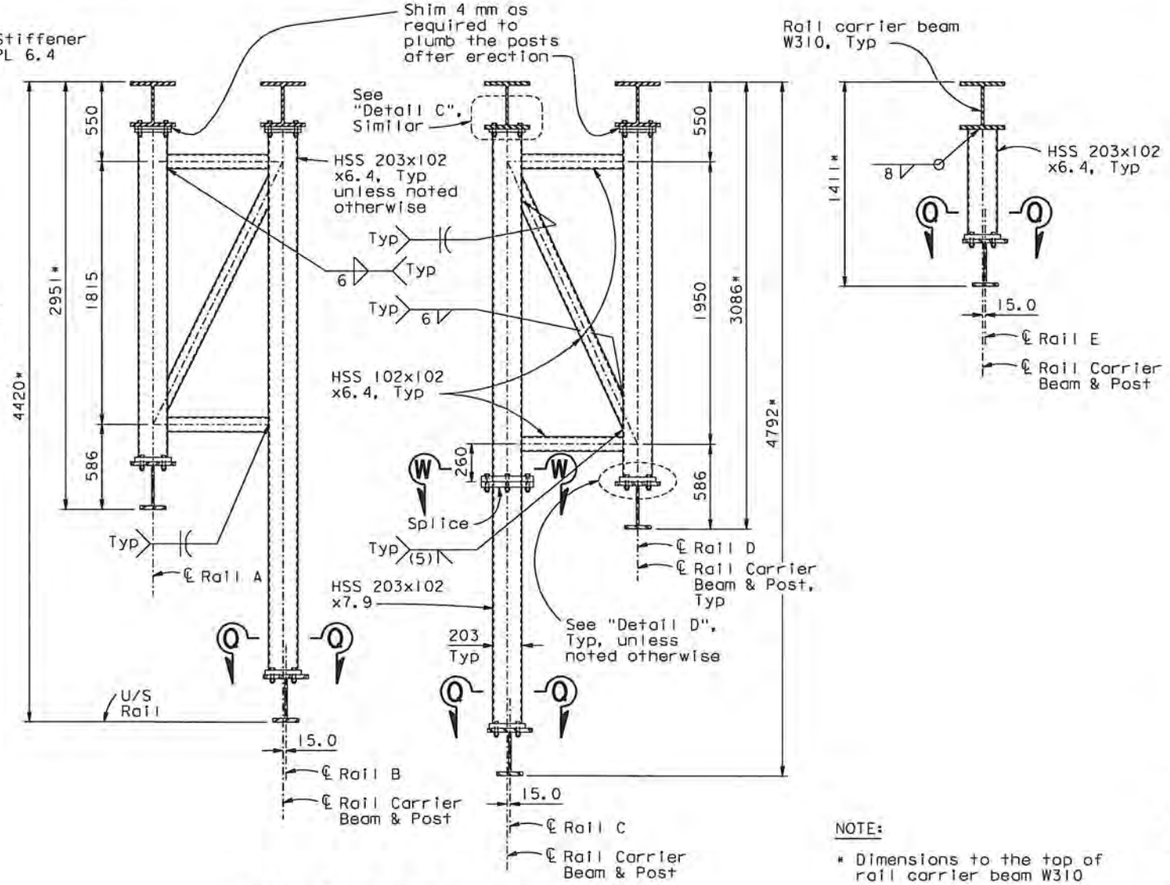

SECTION C-C At Rail P1

1:20

NOTE:

* Dimensions to the top of rail carrier beam W310

CONTRACT CHANGE ORDER NO. 2451
SHEET 114 OF 120

REQUESTS FOR INFORMATION NOT ADDRESSED IN THIS CCO REMAIN IN FORCE

ALL DIMENSIONS ARE IN MILLIMETERS UNLESS OTHERWISE SHOWN

R. Valizadeh/V. Toan/Y.L./W.L./F.C.
DESIGN OVERSIGHT
Roya Valizadeh / Vong Toan / Y. Liu
SIGN OFF DATE 06/19/09

MARK	DATE	DESCRIPTIONS	BY	CH'D	CCO#
0	06/19/09	TRAVELER MODIFICATIONS	TH	AS	2451

REVISIONS

Rev. Date: 5-18-98

DESIGN	BY T. Ho	CHECKED J. Otter	
DETAILS	BY Y. Hsu	CHECKED A. Sanjines	
QUANTITIES	BY Y. Hsu	CHECKED J. Otter	

PREPARED FOR THE STATE OF CALIFORNIA DEPARTMENT OF TRANSPORTATION

R. Manzanarez
PROJECT ENGINEER

BRIDGE NO. 34-0006L/R
KILOMETER POST 13.2/13.9

SAN FRANCISCO OAKLAND BAY BRIDGE
EAST SPAN SEISMIC SAFETY PROJECT
SELF-ANCHORED SUSPENSION BRIDGE
(SUPERSTRUCTURE & TOWER)

TRAVELER TESTING RACK NO. 5

ORIGINAL SCALE IN MILLIMETERS FOR REDUCED PLANS 0 10 20 30 40 50 60 70 80 90 100

CU 04
EA 0120F1

DISREGARD PRINTS BEARING EARLIER REVISION DATES

REVISION DATES (PRELIMINARY STAGE ONLY) 06/19/09

SHEET 746S5 OF

FILE => I:\bb\04-0120F1\sas\contract plans and cco\cco\cco*2451\2-revision 06-19-09\dgn\aktrv155s5.dgn

100 % PS&E

USERNAME => dwinrow DATE PLOTTED => 17 JUN 2009 TIME PLOTTED => 11:43:15

DIST.	COUNTY	ROUTE	KILOMETER POST TOTAL PROJECT	SHEET NO.	TOTAL SHEETS
04	SF	80	13.2/13.9	116356	1204

Caltrans Metric

REGISTERED ENGINEER - CIVIL

06-19-09
PLANS APPROVAL DATE

REGISTERED PROFESSIONAL ENGINEER
Tien Hung Ho
No. C 43990
Exp. 06/30/11
CIVIL
STATE OF CALIFORNIA

The State of California or its officers or agents shall not be responsible for the accuracy or completeness of electronic copies of this plan sheet.

T.Y. LIN / MOFFATT & NICHOL
825 BATTERY STREET
SAN FRANCISCO, CA 94111

Caltrans now has a web site! To get to the web site, go to: http://www.dot.ca.gov

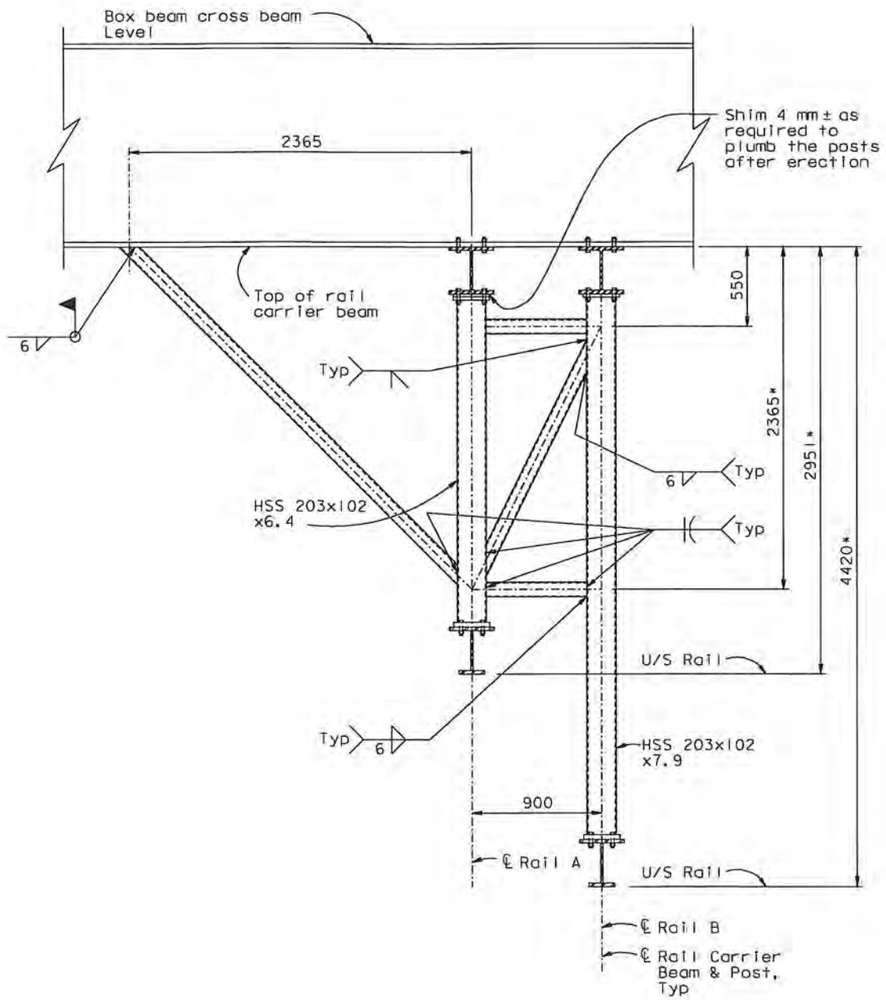

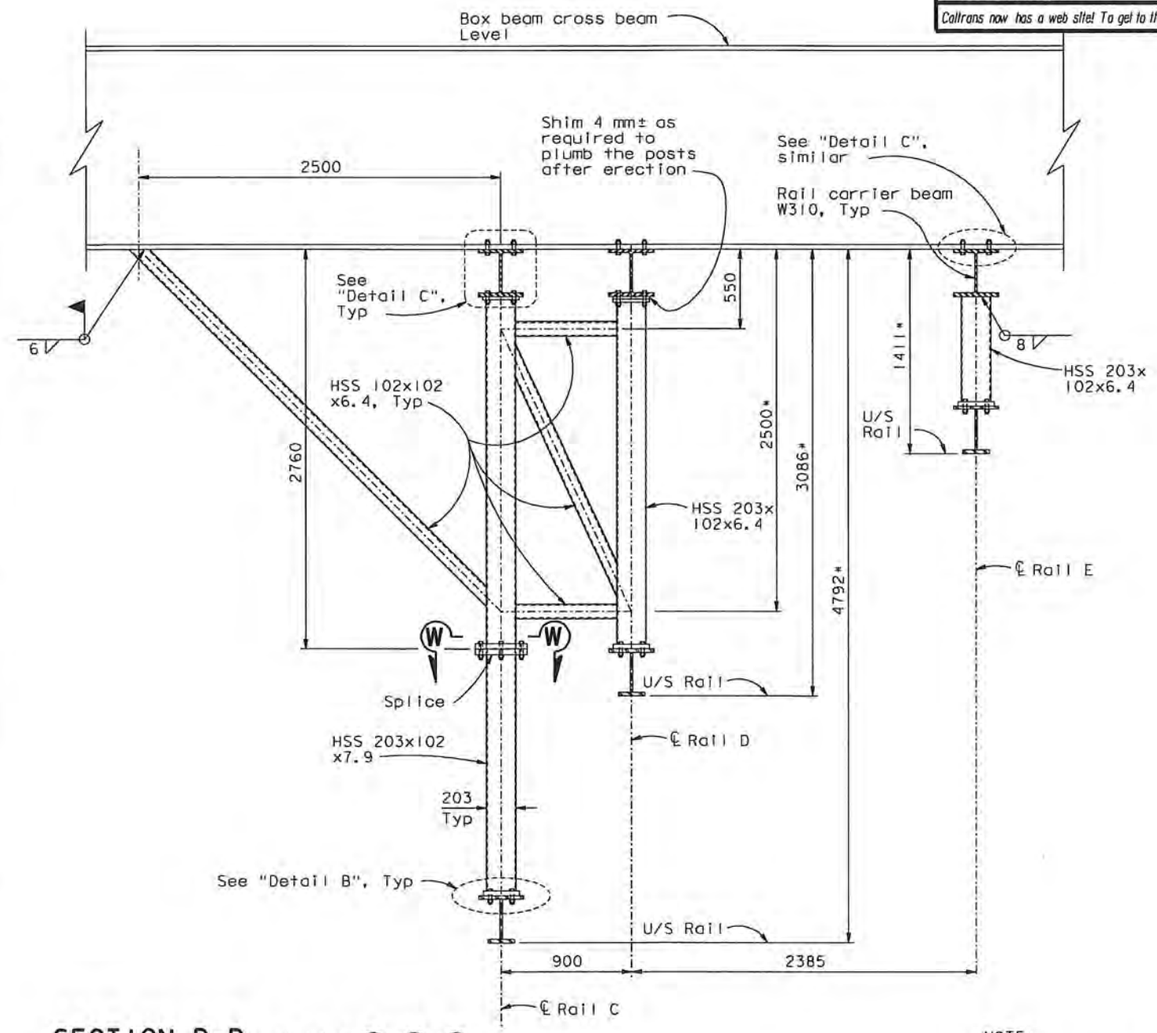

SECTION D-D At Line ②, ③, ④
SECTION DX-DX At Line ⑤
1:20

NOTE:
* Dimemsions to the top of rail carrier beam W310

CONTRACT CHANGE ORDER NO. 24S1
SHEET 115 OF 120

REQUESTS FOR INFORMATION NOT ADDRESSED IN THIS CCO REMAIN IN FORCE

ALL DIMENSIONS ARE IN MILLIMETERS UNLESS OTHERWISE SHOWN

R. Valizadeh/V. Toan/Y.L./W.L./F.C.
DESIGN OVERSIGHT
Roger Valizadeh / Vong Toan / Y. Liu
SIGN OFF DATE 06/19/09

MARK	DATE	DESCRIPTIONS	BY	CH'D	CCO#
0	06/19/09	TRAVELER MODIFICATIONS	TH	AS	24S1

REVISIONS

	BY	CHECKED
DESIGN	T. Ho	J. Otter
DETAILS	Y. Hsu	A. Sanjines
QUANTITIES	Y. Hsu	J. Otter

PREPARED FOR THE STATE OF CALIFORNIA DEPARTMENT OF TRANSPORTATION

R. Manzanarez
PROJECT ENGINEER

BRIDGE NO. 34-0006L/R
KILOMETER POST 13.2/13.9

SAN FRANCISCO OAKLAND BAY BRIDGE
EAST SPAN SEISMIC SAFETY PROJECT
SELF-ANCHORED SUSPENSION BRIDGE (SUPERSTRUCTURE & TOWER)
TRAVELER TESTING RACK NO. 6

Rev. Date: 5-18-98

ORIGINAL SCALE IN MILLIMETERS FOR REDUCED PLANS 0 10 20 30 40 50 60 70 80 90 100

CU 04
EA 0120F1

DISREGARD PRINTS BEARING EARLIER REVISION DATES 06/19/09

REVISION DATES (PRELIMINARY STAGE ONLY)

SHEET 746S6 OF

FILE => I:\bb\04-012001\sas\contract plans and cco\cco\cco#24s1\2-revision 06-19-09\dgn\aktrv155s6.dgn

100 % PS&E

USERNAME => dwinrow DATE PLOTTED => 17 JUN 2009 TIME PLOTTED => 11:44:02

DIST.	COUNTY	ROUTE	KILOMETER POST TOTAL PROJECT	SHEET NO.	TOTAL SHEETS
04	SF	80	13.2/13.9	116357	1204

Caltrans Metric

REGISTERED ENGINEER - CIVIL

06-19-09

PLANS APPROVAL DATE

REGISTERED PROFESSIONAL ENGINEER Tien Hung Ho No. C 43990 Exp. 06/30/11 CIVIL STATE OF CALIFORNIA

The State of California or its officers or agents shall not be responsible for the accuracy or completeness of electronic copies of this plan sheet.

T.Y. LIN / MOFFATT & NICHOL
825 BATTERY STREET
SAN FRANCISCO, CA 94111

Caltrans now has a web site! To get to the web site, go to: http://www.dot.ca.gov

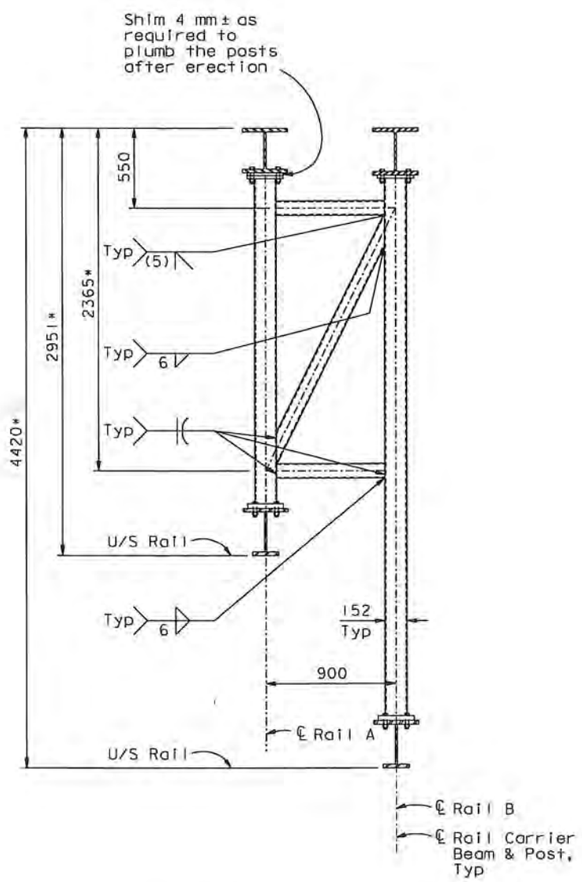

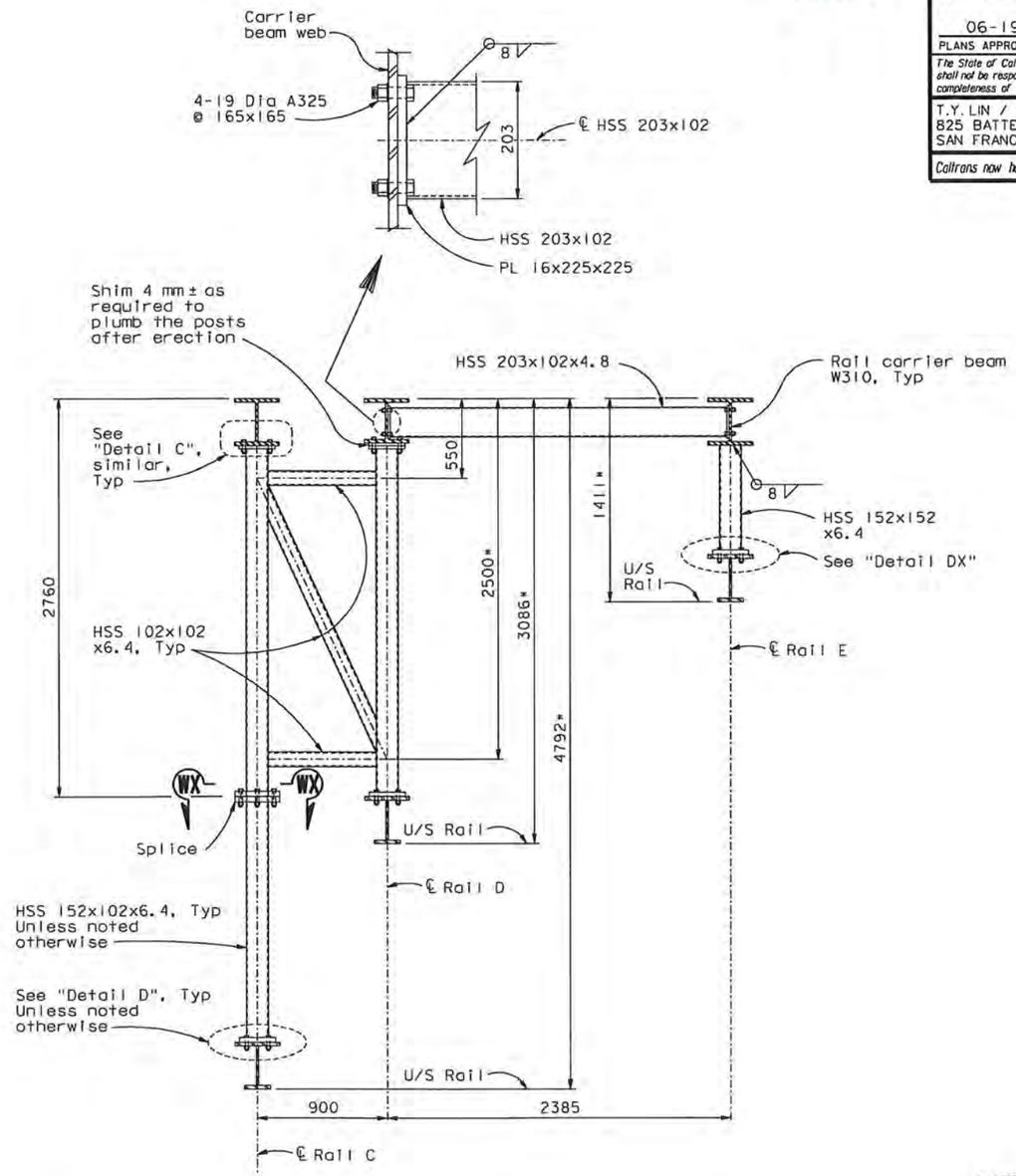

NOTE:

* Dimemsions to the top of rail carrier beam W310

CONTRACT CHANGE ORDER NO. 2451
SHEET 116 OF 120

REQUESTS FOR INFORMATION NOT ADDRESSED IN THIS CCO REMAIN IN FORCE

SECTION E-E

1:20

ALL DIMENSIONS ARE IN MILLIMETERS UNLESS OTHERWISE SHOWN

100 % PS&E

R. Valizadeh/V. Toan/Y.L./W.L./F.C.
DESIGN OVERSIGHT
Ron Valizadeh / Vong P. Toan / Y. Liu
SIGN OFF DATE 06/18/09

MARK	DATE	DESCRIPTIONS	BY	CH'D	CCO#
0	06/19/09	TRAVELER MODIFICATIONS	TH	AS	2451

REVISIONS

Rev. Date: 5-18-98

DESIGN	BY T. Ho	CHECKED J. Otter	
DETAILS	BY Y. Hsu	CHECKED A. Sanjines	
QUANTITIES	BY Y. Hsu	CHECKED J. Otter	

PREPARED FOR THE STATE OF CALIFORNIA DEPARTMENT OF TRANSPORTATION

R. Manzanarez
PROJECT ENGINEER

BRIDGE NO. 34-0006L/R
KILOMETER POST 13.2/13.9

SAN FRANCISCO OAKLAND BAY BRIDGE
EAST SPAN SEISMIC SAFETY PROJECT
SELF-ANCHORED SUSPENSION BRIDGE
(SUPERSTRUCTURE & TOWER)

TRAVELER TESTING RACK NO. 7

ORIGINAL SCALE IN MILLIMETERS FOR REDUCED PLANS 0 10 20 30 40 50 60 70 80 90 100

CU 04
EA 0120F1

DISREGARD PRINTS BEARING EARLIER REVISION DATES 06/15/09

REVISION DATES (PRELIMINARY STAGE ONLY)

SHEET 746S7 OF

FILE => I:\bb\04-012001\sas\contract plans and cco\cco\cco#2451\2-revision 06-19-09\dgn\aktrv155s7.dgn

USERNAME => dwinrow DATE PLOTTED => 17 JUN 2009 TIME PLOTTED => 11:44:57

DIST.	COUNTY	ROUTE	KILOMETER POST TOTAL PROJECT	SHEET NO.	TOTAL SHEETS
04	SF	80	13.2/13.9	116358	1204

REGISTERED ENGINEER - CIVIL

06-19-09

PLANS APPROVAL DATE

REGISTERED PROFESSIONAL ENGINEER Tien Hung Ho No. C 43990 Exp. 06/30/11 CIVIL STATE OF CALIFORNIA

The State of California or its officers or agents shall not be responsible for the accuracy or completeness of electronic copies of this plan sheet.

T.Y. LIN / MOFFATT & NICHOL
825 BATTERY STREET
SAN FRANCISCO, CA 94111

Caltrans now has a web site! To get to the web site, go to: http://www.dot.ca.gov

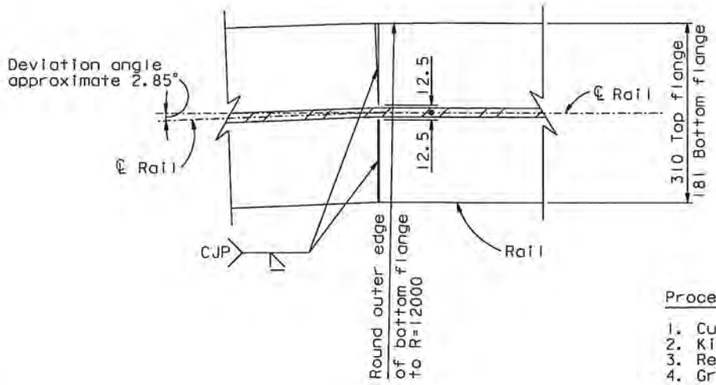

Procedures:

1. Cut flanges
2. Kink web
3. Reweld flanges
4. Grind smooth

RAIL DETAIL @ DEVIATION POINTS
1:5

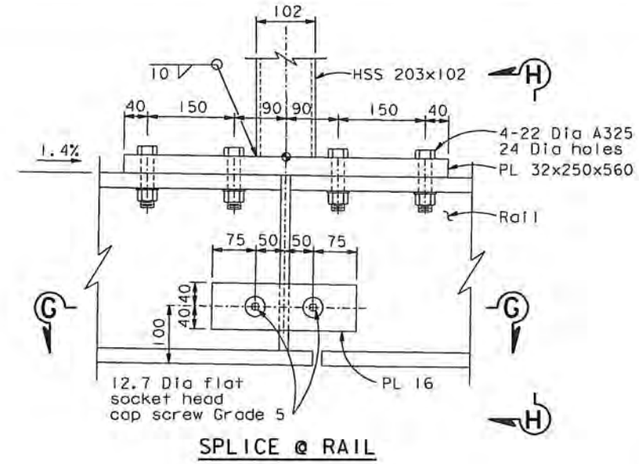

SPLICE @ RAIL

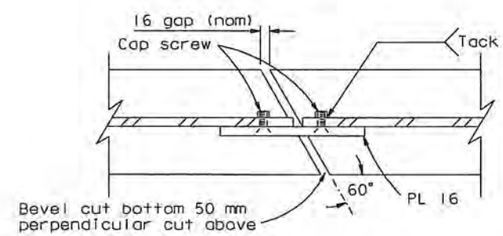

SECTION G-G

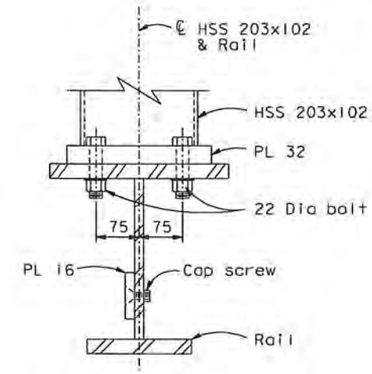

SECTION H-H

DETAIL B
1:5

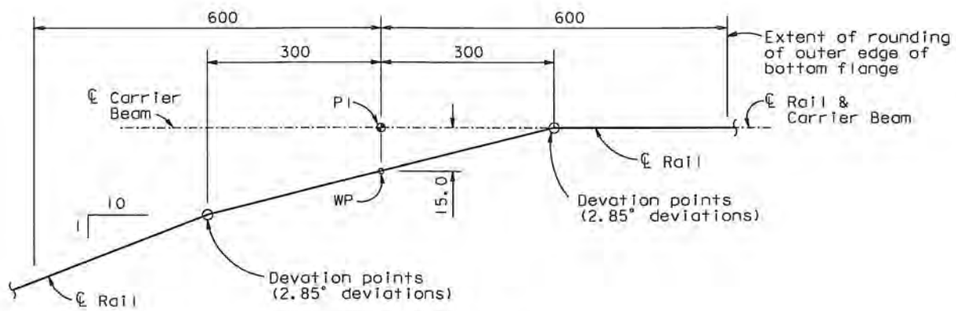

RAIL DEVIATION POINTS
NTS

DETAIL A

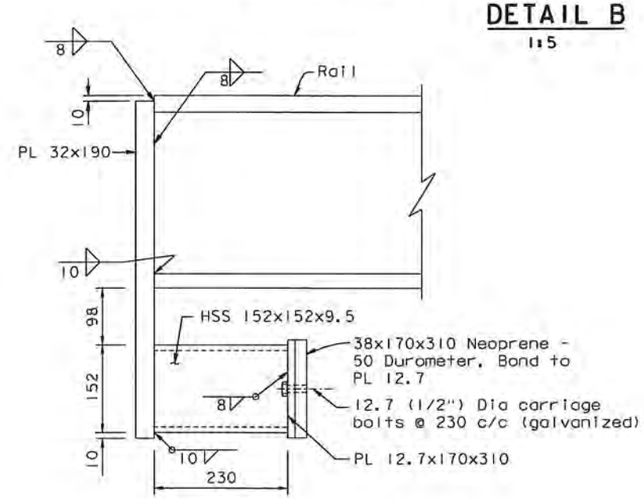

TROLLEY STOP DETAIL E
1:5

CONTRACT CHANGE ORDER NO. 2451
SHEET 117 OF 120

REQUESTS FOR INFORMATION NOT ADDRESSED IN THIS CCO REMAIN IN FORCE

ALL DIMENSIONS ARE IN MILLIMETERS UNLESS OTHERWISE SHOWN

MARK	DATE	DESCRIPTIONS	BY	CH'D	CCO#
0	06/19/09	TRAVELER MODIFICATIONS	TH	AS	2451

REVISIONS

R. Valizadeh/V. Toan/Y.L./W.L./F.C.
DESIGN OVERSIGHT
Roya Valizadeh / Vong Toan / Y. Liu
SIGN OFF DATE 06/19/09

DESIGN BY T. Ho CHECKED J. Otter
DETAILS BY Y. Hsu CHECKED A. Sanjines
QUANTITIES BY Y. Hsu CHECKED J. Otter

PREPARED FOR THE STATE OF CALIFORNIA DEPARTMENT OF TRANSPORTATION

R. Manzanarez
PROJECT ENGINEER

BRIDGE NO. 34-0006L/R
KILOMETER POST 13.2/13.9

SAN FRANCISCO OAKLAND BAY BRIDGE
EAST SPAN SEISMIC SAFETY PROJECT
SELF-ANCHORED SUSPENSION BRIDGE
(SUPERSTRUCTURE & TOWER)
TRAVELER TESTING RACK NO. 8

Rev. Date: 5-18-98

ORIGINAL SCALE IN MILLIMETERS FOR REDUCED PLANS 0 10 20 30 40 50 60 70 80 90 100

CU 04
EA 0120F1

DISREGARD PRINTS BEARING EARLIER REVISION DATES 06/19/09

REVISION DATES (PRELIMINARY STAGE ONLY)

SHEET 746S8 OF

FILE => I:\bb\04-01200I\sas\contract plans and cco\cco\cco=2451\2-revision 06-19-09\dgn\aktrv155s8.dgn

100 % PS&E

USERNAME => dwinrow DATE PLOTTED => 17 JUN 2009 TIME PLOTTED => 11:45:56

DIST.	COUNTY	ROUTE	KILOMETER POST TOTAL PROJECT	SHEET NO.	TOTAL SHEETS
04	SF	80	13.2/13.9	116359	1204

REGISTERED ENGINEER - CIVIL

06-19-09

PLANS APPROVAL DATE

REGISTERED PROFESSIONAL ENGINEER — Tien Hung Ho, No. C 43990, Exp. 06/30/11, CIVIL, STATE OF CALIFORNIA

The State of California or its officers or agents shall not be responsible for the accuracy or completeness of electronic copies of this plan sheet.

T.Y. LIN / MOFFATT & NICHOL
825 BATTERY STREET
SAN FRANCISCO, CA 94111

Caltrans now has a web site! To get to the web site, go to: http://www.dot.ca.gov

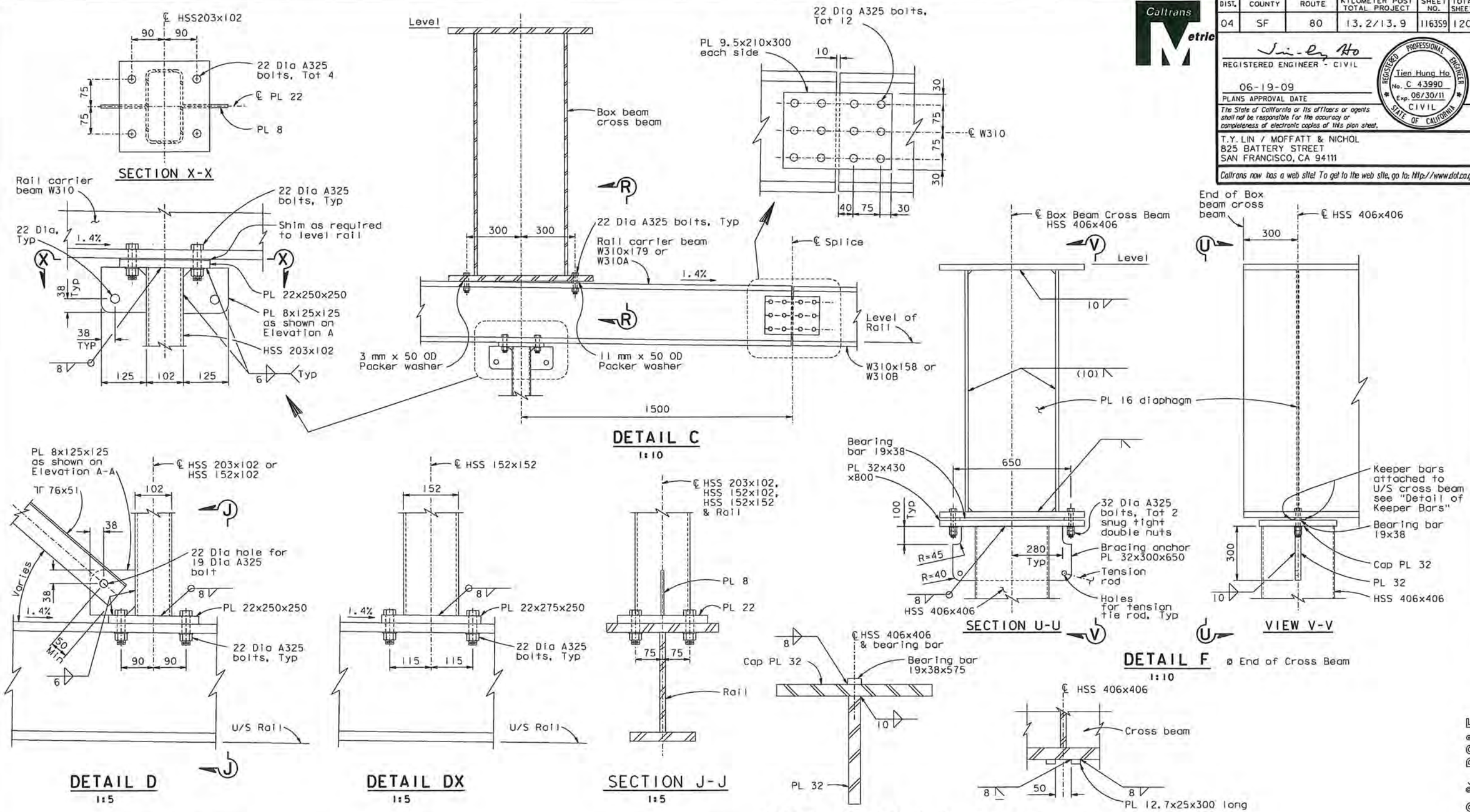

CONTRACT CHANGE ORDER NO. 2451
SHEET 118 OF 120

REQUESTS FOR INFORMATION NOT ADDRESSED IN THIS CCO REMAIN IN FORCE

ALL DIMENSIONS ARE IN MILLIMETERS UNLESS OTHERWISE SHOWN

MARK	DATE	DESCRIPTIONS	BY	CH'D	CCO#
0	06/19/09	TRAVELER MODIFICATIONS	TH	AS	2451

REVISIONS

R. Valizadeh/V. Toan/Y.L./W.L./F.C.
DESIGN OVERSIGHT
Roya Valizadeh / Vang Toan / Y. Liu
SIGN OFF DATE 06/19/09

Rev. Date: 5-18-98

	BY	CHECKED
DESIGN	T. Ho	J. Otter
DETAILS	Y. Hsu	A. Sanjines
QUANTITIES	Y. Hsu	J. Otter

ORIGINAL SCALE IN MILLIMETERS FOR REDUCED PLANS 0 10 20 30 40 50 60 70 80 90 100

PREPARED FOR THE STATE OF CALIFORNIA DEPARTMENT OF TRANSPORTATION

R. Manzanarez
PROJECT ENGINEER

CU 04
EA 0120F1

BRIDGE NO. 34-0006L/R
KILOMETER POST 13.2/13.9

DISREGARD PRINTS BEARING EARLIER REVISION DATES 06/15/09

REVISION DATES (PRELIMINARY STAGE ONLY)

SHEET 746S9 OF

SAN FRANCISCO OAKLAND BAY BRIDGE
EAST SPAN SEISMIC SAFETY PROJECT
SELF-ANCHORED SUSPENSION BRIDGE
(SUPERSTRUCTURE & TOWER)

TRAVELER TESTING RACK NO. 9

100 % PS&E

USERNAME => dwinrow DATE PLOTTED => 17 JUN 2009 TIME PLOTTED => 11:46:50

FILE => I:\bb\04-012001\sos\contract plans and cco\cco\cco#2451\2-revision 06-19-09\dgn\aktrv1555g.dgn

DIST.	COUNTY	ROUTE	KILOMETER POST TOTAL PROJECT	SHEET NO.	TOTAL SHEETS
04	SF	80	13.2/13.9	163S10	1204

REGISTERED ENGINEER - CIVIL

06-19-09

PLANS APPROVAL DATE

REGISTERED PROFESSIONAL ENGINEER Tien Hung Ho No. C 43990 Exp. 06/30/11 CIVIL STATE OF CALIFORNIA

The State of California or its officers or agents shall not be responsible for the accuracy or completeness of electronic copies of this plan sheet.

T.Y. LIN / MOFFATT & NICHOL
825 BATTERY STREET
SAN FRANCISCO, CA 94111

Caltrans now has a web site! To get to the web site, go to: http://www.dot.ca.gov

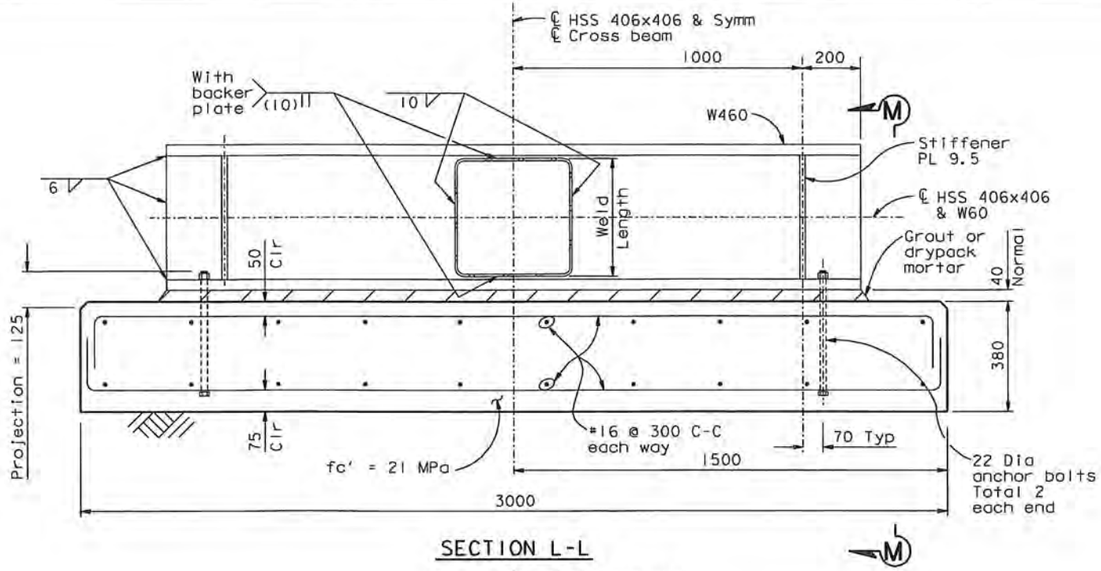

SECTION L-L

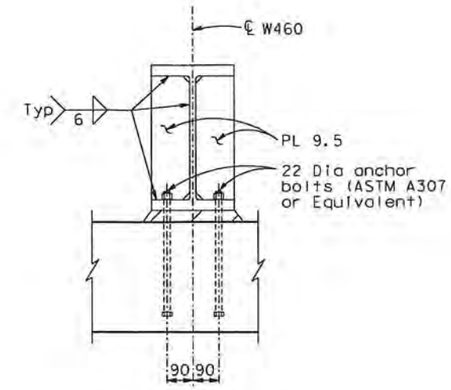

SECTION M-M

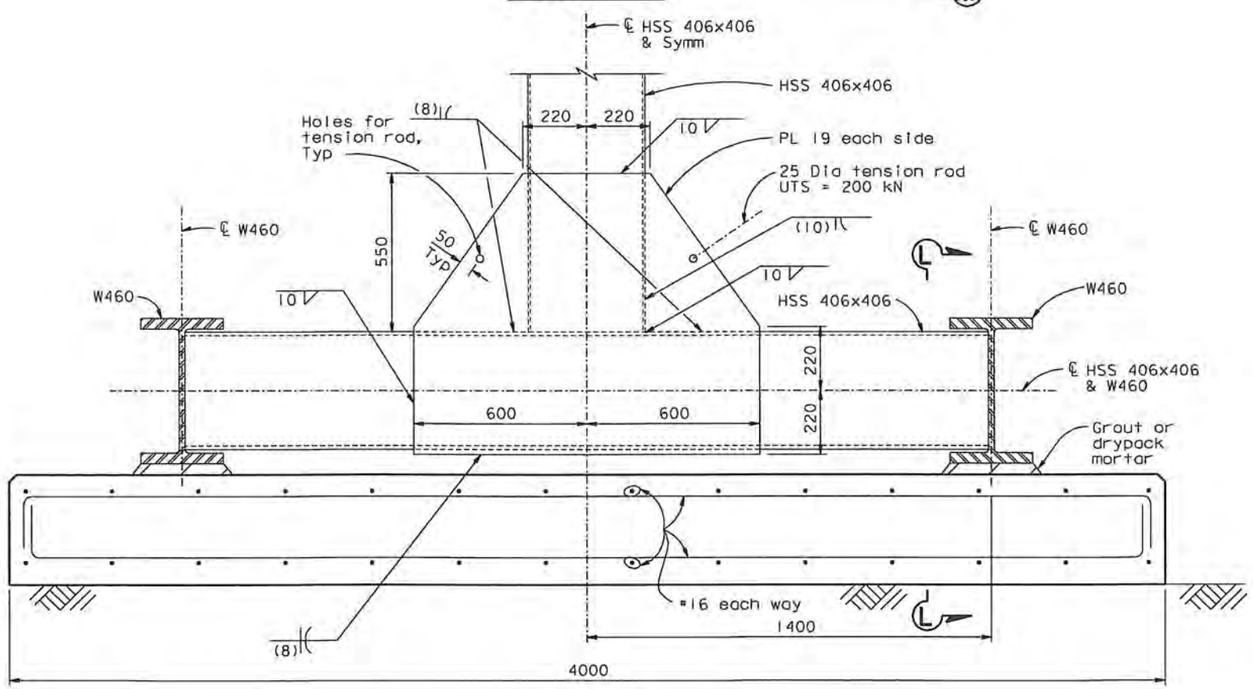

DETAIL G

1:10

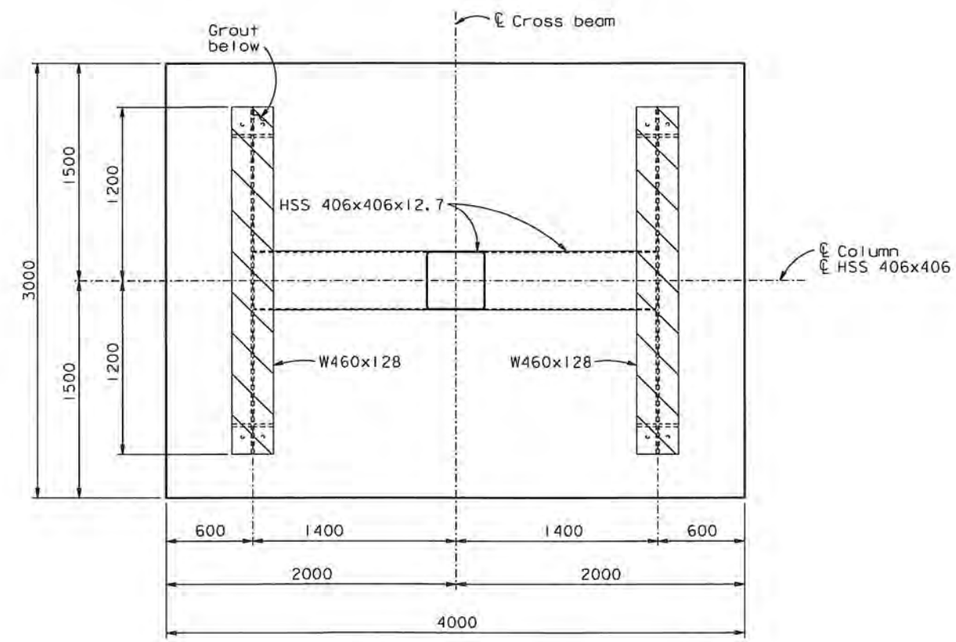

PLAN OF FOOTING

1:5

CONTRACT CHANGE ORDER NO. 2451
SHEET 119 OF 120

REQUESTS FOR INFORMATION NOT ADDRESSED IN THIS CCO REMAIN IN FORCE

ALL DIMENSIONS ARE IN MILLIMETERS UNLESS OTHERWISE SHOWN

R. Valizadeh/V. Toan/Y.L./W.L./F.C.
DESIGN OVERSIGHT
Roya Valizadeh / Vang P. Toan / Y. Liu
SIGN OFF DATE 06/19/09

MARK	DATE	DESCRIPTIONS	BY	CH'D	CCO#
0	06/19/09	TRAVELER MODIFICATIONS	TH	AS	2451

REVISIONS

DESIGN	BY T. Ho	CHECKED J. Otter	
DETAILS	BY Y. Hsu	CHECKED A. Sanjines	
QUANTITIES	BY Y. Hsu	CHECKED J. Otter	

PREPARED FOR THE STATE OF CALIFORNIA DEPARTMENT OF TRANSPORTATION

R. Manzanarez
PROJECT ENGINEER

BRIDGE NO. 34-0006L/R
KILOMETER POST 13.2/13.9

SAN FRANCISCO OAKLAND BAY BRIDGE
EAST SPAN SEISMIC SAFETY PROJECT
SELF-ANCHORED SUSPENSION BRIDGE
(SUPERSTRUCTURE & TOWER)

TRAVELER TESTING RACK NO. 10

Rev. Date: 5-18-98

ORIGINAL SCALE IN MILLIMETERS FOR REDUCED PLANS 0 10 20 30 40 50 60 70 80 90 100

CU 04
EA 0120F1

DISREGARD PRINTS BEARING EARLIER REVISION DATES

REVISION DATES (PRELIMINARY STAGE ONLY) 06/19/09

SHEET 746S10 OF

FILE => I:\bb\04-0120F1\sas\contract plans and cco\cco\cco#2451\2-revision 06-19-09\dgn\aktrv155s10.dgn

100 % PS&E

USERNAME => dwinrow DATE PLOTTED => 17 JUN 2009 TIME PLOTTED => 11:47:52

DIST.	COUNTY	ROUTE	KILOMETER POST TOTAL PROJECT	SHEET NO.	TOTAL SHEETS
04	SF	80	13.2/13.9	116311	1204

REGISTERED ENGINEER - CIVIL

06-19-09

PLANS APPROVAL DATE

REGISTERED PROFESSIONAL ENGINEER Tien Hung Ho No. C 43990 Exp. 06/30/11 CIVIL STATE OF CALIFORNIA

The State of California or its officers or agents shall not be responsible for the accuracy or completeness of electronic copies of this plan sheet.

T.Y. LIN / MOFFATT & NICHOL
825 BATTERY STREET
SAN FRANCISCO, CA 94111

Caltrans now has a web site! To get to the web site, go to: http://www.dot.ca.gov

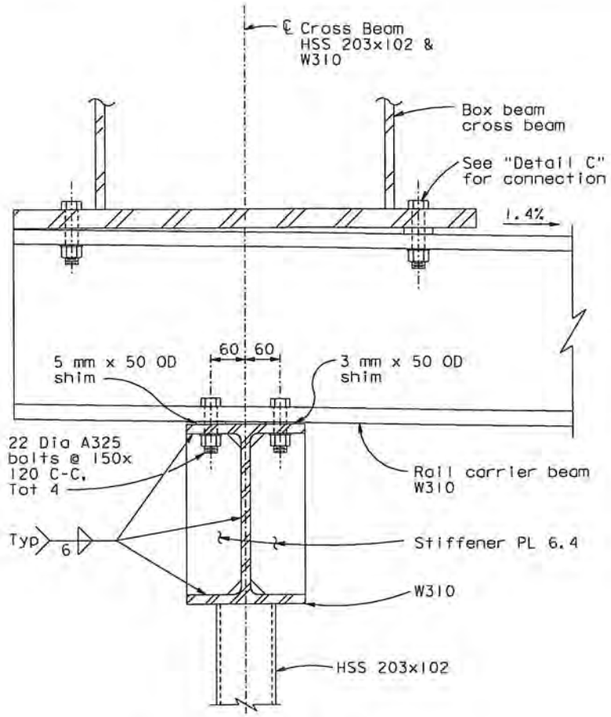

SECTION N-N
1:5

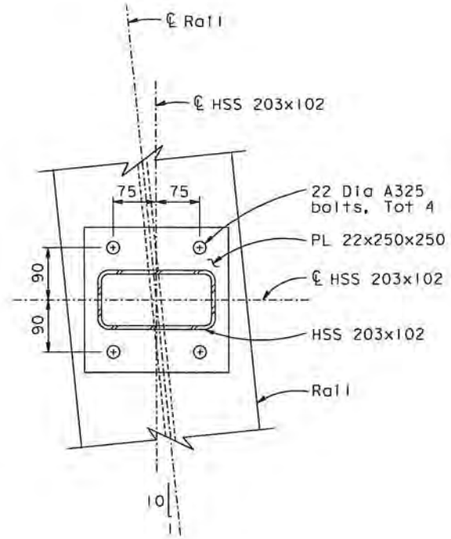

SECTION P-P
1:5

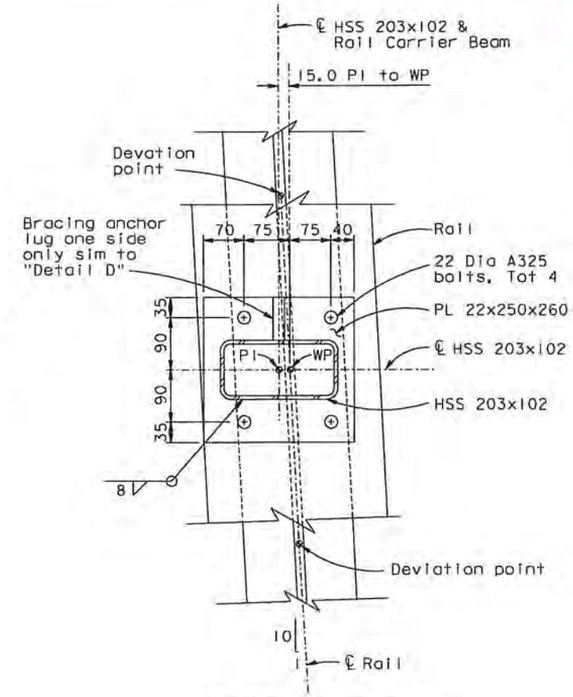

SECTION Q-Q
1:5

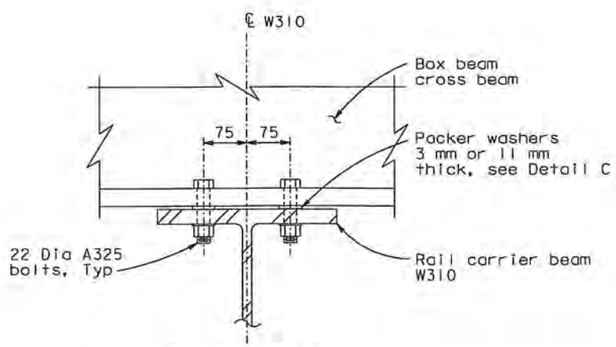

SECTION R-R
1:5

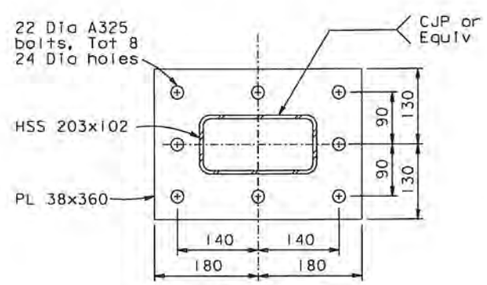

SECTION W-W (Splice in post)
1:5

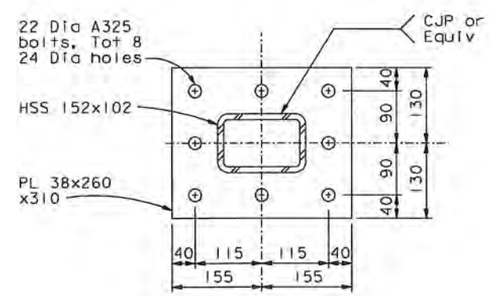

SECTION WX-WX (Splice in post)
1:5

CONTRACT CHANGE ORDER NO. 24S1
SHEET 120 OF 120

REQUESTS FOR INFORMATION NOT ADDRESSED IN THIS CCO REMAIN IN FORCE

ALL DIMENSIONS ARE IN MILLIMETERS UNLESS OTHERWISE SHOWN

MARK	DATE	DESCRIPTIONS	BY	CH'D	CCO#
0	06/19/09	TRAVELER MODIFICATIONS	TH	AS	24S1

REVISIONS

R. Valizadeh/V. Toan/Y.L./W.L./F.C.
DESIGN OVERSIGHT
Roya Valizadeh / Vong P. Toan / Y. Liu
SIGN OFF DATE 06/19/09

DESIGN BY T. Ho CHECKED J. Otter
DETAILS BY Y. Hsu CHECKED A. Sanjines
QUANTITIES BY Y. Hsu CHECKED J. Otter

PREPARED FOR THE STATE OF CALIFORNIA DEPARTMENT OF TRANSPORTATION

R. Manzanarez
PROJECT ENGINEER

BRIDGE NO. 34-0006L/R
KILOMETER POST 13.2/13.9

SAN FRANCISCO OAKLAND BAY BRIDGE
EAST SPAN SEISMIC SAFETY PROJECT
SELF-ANCHORED SUSPENSION BRIDGE
(SUPERSTRUCTURE & TOWER)

TRAVELER TESTING RACK NO. 11

Rev. Date: 5-18-98

ORIGINAL SCALE IN MILLIMETERS FOR REDUCED PLANS 0 10 20 30 40 50 60 70 80 90 100

CU 04
EA 0120F1

DISREGARD PRINTS BEARING EARLIER REVISION DATES 06/19/09

REVISION DATES (PRELIMINARY STAGE ONLY)

SHEET 746S11 OF

FILE => I:\bb\04-01200I\sas\contract plans and cco\cco\cco#24s1\2-revision 06-19-09\dgn\aktrv155s11.dgn

100 % PS&E

USERNAME => dwinrow DATE PLOTTED => 17 JUN 2009 TIME PLOTTED => 11:48:43

CONTRACT CHANGE ORDER

Change Requested by: Engineer

CCO: 25 **Suppl. No. 0** **Contract No. 04 – 0120F4** **Road** SF-80-13.2/13.9 **FED. AID LOC.:**

To: **AMERICAN BRIDGE/FLUOR ENTERPRISES INC A JOINT VENTURE**

You are directed to make the following changes from the plans and specifications or do the following described work not included in the plans and specifications for this contract. ***NOTE: This change order is not effective until approved by the Engineer.***

Description of work to be done, estimate of quantities and prices to be paid. (Segregate between additional work at contract price, agreed price and force account.) Unless otherwise stated, rates for rental of equipment cover only such time as equipment is actually used and no allowance will be made for idle time. This last percentage shown is the net accumulated increase or decrease from the original quantity in the Engineer's Estimate.

Adjustment of Compensation at Lump Sum:

ITEM 1.

Modify the Hinge A Seismic Joint as follows:

A. Revise Special Provisions Section 10-1.54 "SEISMIC JOINT," as shown on sheets 3 through 14 of this change order.

B. Revise Special Provisions Section 10-1.70 "CLEAN AND PAINT STRUCTURAL STEEL (SEISMIC JOINT, SPHERICAL BUSHING BEARING, AND SHEAR KEY)," as shown on sheet 14 of this change order.

The following revised plan sheets detail the changes addressed in this change order: 852R3, 863R3, 864R1, 864S1, 864S2R2, 864S3R1, 864S4R1, 864S5R1, 864S6R2, 864S7R1, 864S8R1, 864S9, 864S10, 864S11R1, 865R5, 866R3, 867R5, 868R5, 869R2, 870R3, 871R4 and 872R3 (of 1204) as shown on sheets 15 through 36 of this change order.

This change order resolves the costs associated with Contractor Request for Information (RFI) numbers 2463 and 2507 with respect to changes listed above.

Adjustment of Compensation at Lump Sum..... $2,245,125.00

ITEM 2.

The items identified above in this change order have been paid as part of CCO 108S1 resolution. Therefore, the amount due under this change order will be adjusted by the amount paid under CCO 108S1 to prevent a double payment. Total amount paid under CCO 108S1, and to be credited to this change, is $1,191,577.00.

Adjustment of Compensation at Lump Sum.....<$1,191,577.00>

CHANGE ORDER COST AND TIME SUMMARY

(ITEM 1) Adjustment of Compensation at Lump Sum.....	$2,245,125.00
(ITEM 2) Amount paid under CCO 108S1 for this change order	<$1,191,577.00>
Total net pay for this change order	$1,053,548.00

This sum constitutes full and complete compensation for furnishing all labor, material, tools and incidentals including all markups by reason of this change.

By order of this change it is understood that additional costs to install the Hinge A Seismic Joint and apply Polymer/Aggregate Skid Coat, will be compensated for in a future change order.

CONTRACT CHANGE ORDER

Change Requested by: Engineer

CCO: 25 **Suppl. No. 0** **Contract No. 04 – 0120F4** **Road** SF-80-13.2/13.9 **FED. AID LOC.:**

Estimated Cost: Increase ☒ Decrease ☐ $1,053,548.00

By reason of this order the time of completion will be adjusted as follows: 0 Days

Submitted by

Signature	**Resident Engineer** Kannu Balan, Senior T.E.	**Date** 11-8-11

Approval Recommended by

Signature	**Program Manager** Jon Tapping for Tony Anziano, Program Manager	**Date** 11-9-11

Engineer Approval by

Signature	**Program Manager** Brian Maroney for Tony Anziano, Program Manager	**Date** 11/16/2011

We the undersigned contractor, have given careful consideration to the change proposed and agree, if this proposal is approved, that we will provide all equipment, furnish the materials, except as otherwise be noted above, and perform all services necessary for the work above specified, and will accept as full payment therefor the prices shown above.

NOTE: If you, the contractor, do not sign acceptance of this order, your attention is directed to the requirements of the specifications as to proceeding with the ordered work and filing a written protest within the time therein specified.

Contractor Acceptance by

Signature	(Print name and title) BRIAN A. PETERSEN - PROJECT DIRECTOR	**Date** 11 NOV 11

10-1.54 SEISMIC JOINT

Seismic joints shall consist of steel deck plates *with friction groove pattern,* channel assemblies, support plates, *fast setting hydraulic cement concrete, elastomeric concrete,* self-consolidating concrete, *Trelleborg joint assembly,* sealing elements, gutter, and anchorage components and shall be fabricated and installed at Hinges AW and AE in conformance with the details shown on the plans and as specified in the Standard Specifications and these special provisions.

Attention is directed to "Cooperation," of these special provisions.

Unless otherwise directed by the Engineer, prior to submitting working drawings, the Contractor shall inspect the Hinge A blockouts in the adjacent Skyway Structures constructed by others in Contract No. 04-012024. The Contractor shall submit to the Engineer an inspection report for review and approval. This inspection report shall be titled "Skyway Blockouts Inspection Report" and shall include the actual blockout sizes; potential interference with the blockout reinforcement and seismic anchorages shown on the plans; any conflicts with the details shown on the plans; and recommendations to resolve the conflicts. The Contractor shall allow the Engineer 10 days to review and approve the "Skyway Blockouts Inspection Report".

WORKING DRAWINGS

The Contractor shall submit working drawings in conformance with the provisions in "Working Drawings" of these special provisions, and the requirements specified herein.

Working drawings shall include complete details, information, and drawings of the seismic joints and anchorage components and the method, materials, equipment, and procedures for fabrication and installation that the Contractor proposes to use.

Working drawing submittals shall include the following:

A. Fabrication plans including all details, elevations, and sections of the seismic joint as shown on the plans. All dimensions and design tolerances shall be specified. Fabrication plans for the sizes of deck plates and support plates shall consider roadway super elevations and longitudinal gaps between the plates for sealing elements. Unless otherwise directed by the Engineer, fabrication plans shall conform to the actual blockout sizes and recommendations specified in the approved "Skyway Blockouts Inspection Report."

B. All ASTM or other material designations.

C. Sections showing all materials comprising the seismic joint with complete details of all individual components including welded splices and connections~~,~~ *and* welding procedures. ~~and the measures to be taken to prevent steel plate from distortion due to the heat of traction welding.~~

D. Joint installation plans including methods, materials, equipment, sequence, lifting mechanisms and locations, details of temporary anchorage during setting, temperature adjustment devices, method for maintaining full contact between deck plates and support plates during and after installation, installation details at curbs, seal installation details, and other procedures that the Contractor proposes to use for installation of the seismic joints.

E. Fast setting hydraulic cement concrete mix design and placement procedures. The Contractor's proposed fast setting hydraulic cement concrete mix design submittals shall be as specified in "Fast Setting Hydraulic Cement Concrete" in these special provisions.

F. Elastomeric concrete technical information. Technical information shall be furnished from the manufacturer of the elastomeric concrete proposed for use in the work.

~~E.~~ *G.* Self-consolidating concrete mix design and placement procedures. The Contractor's proposed self-consolidating concrete mix design submittals shall include test results for slump flow, slump flow time to a 500 mm diameter, stability of the concrete mixture, and compressive strengths at 7 and 28 days.

~~F.~~ *H.* Details and procedures of the mock-up construction to demonstrate self-consolidating concrete.

~~G.~~ *I.* List of coating system for seismic joints identifying cleaning and painting of all steel components as specified in "Clean and Paint Structural Steel (Seismic Joint, Spherical Bushing Bearing, and Shear Key)" of these special provisions.

~~H.~~ *J.* Anchorage components including concrete blockout details and any additions or rearrangements of the reinforcing steel from that shown on the plans.

~~I.~~ *K.* Storage plans for manufacture storage, interim storage, and on-site storage details including temporary support for the seismic joints.

~~J.~~ *L.* Shipping plans including handling of the seismic joints during transportation. Each shipment of the seismic joint materials shall be accompanied by a Certificate of Compliance in conformance with the provisions in Section 6-1.07, "Certificates of Compliance," of the Standard Specifications. The certificate shall state that the materials and fabrication involved comply in all respects to the specifications and data submitted in obtaining approval.

After complete working drawings are received by the Engineer, the Contractor shall allow the Engineer ~~20~~ *60* days to review the submittal. No fabrication of the seismic joint shall begin until complete working drawings are reviewed and approved, in writing, by the Engineer.

The final approval of the Contractor's mix design for self-consolidating concrete is contingent upon the successful mock-up construction as specified in "Demonstration Pours" herein.

MATERIALS

Attention is directed to "Welding" and "Audits" of these special provisions. Welding of seismic joint shall conform to AWS D1.5.

Structural steel, *including anchor studs,* shall conform to "Steel Structures" of these special provisions. Structural steel shall conform to the requirements of ASTM Designation: A 709M, Grade 345. ~~Bolts, nuts and washers~~ *High strength bolts shall be galvanized and* conform to the requirements of ASTM Designation: ~~A325 or A 325M and Section 75-1.03,~~ *A 449, Type 1. Nuts and washers shall conform to the requirements in Section 75,* "Miscellaneous ~~Bridge~~ *Metal,"* of the Standard Specifications.

Sealing elements shall be 2 component silicone sealant that meets the requirements of Type A and AL seal in Section, 51-1.12F(3), "Materials and Installation," of the Standard Specifications. Sealing elements shall conform to the details shown on the plans and shall be continuous without splices.

Concrete for filling blockouts shall conform to the requirements in "Fast Setting Hydraulic Cement Concrete," "Elastomeric Concrete" and "Self-Consolidating Concrete," of these special provisions.

Reinforcing steel shall conform to the provisions in "Reinforcement" of these special provisions.

Gutter shall conform to the provisions in "Miscellaneous Metal (Bridge)," of these special provisions.

Neoprene sheet *and elastomeric washers* shall conform to Section 51-1.145, "Strip Waterstops," of the Standard Specifications.

~~Elastomeric washers shall conform to the requirements specified in Section 51-1.12H(1), "Plain and Fabric Reinforced Elastomeric Bearing Pads," of the Standard Specifications.~~

Fast Setting Hydraulic Cement Concrete

Fast setting hydraulic cement concrete shall conform to the provisions in Section 51, "Concrete Structures," of the Standard Specifications and these special provisions.

Fast Setting Hydraulic Cement Concrete (FSHCC) shall consist of hydraulic cement conforming to the requirements below, aggregate, and any admixtures used. The combined aggregate grading used in FSHCC shall be any of the maximum size grading limits specified in Section 90-3.04, "Combined Aggregate Gradings" of the Standard Specifications. The minimum 3 hour compressive strength shall be 14 MPa and the minimum 56 day compressive strength shall be 35 MPa.

FSHCC shall conform to the provisions in Section 90, "Portland Cement Concrete," of the Standard Specifications, except that any cement meeting the requirements specified in ASTM Designation: C 219 and conforming to the following requirements may be used.

Test Description	*Test Method*	*Requirement*
Contraction in Air	*California Test 527, W/C Ratio = 0.39 ± 0.010*	*0.053 %, max.*
Mortar Expansion in Water	*ASTM Designation: C 1038*	*0.04 %, max.*
*Soluble Chloride**	*California Test 422*	*0.05 %, max.*
*Soluble Sulfates**	*California Test 417*	*0.30 %, max.*
Thermal Stability	*California Test 553*	*90 %, min.*
Compressive Strength @ 3 days	*ASTM Designation: C 109*	*17 MPa*

**Test is to be done on a cube specimen, fabricated in conformance with the requirements in ASTM Designation: C 109, cured at least 14 days and then pulverized to 100% passing the 300-µm sieve*

Type C accelerating chemical admixtures conforming to the provisions in Section 90-4, "Admixtures," of the Standard Specifications may be used. In addition to the admixtures listed on the Department's current list of approved admixtures, citric acid or borax may be used if requested in writing by the cement manufacturer and a sample is submitted to the Engineer for approval. Chemical admixtures, if used, shall be included in the testing for requirements listed in the table above.

Penetration requirements in Section 90-6.06, "Amount of Water and Penetration," of the Standard Specifications shall not apply.

The Contractor shall submit mix designs that include the following:

A. *Compressive Strength, at 3 hours, 24 hours, 3 days, 7 days, 28 days and 56 days.*
B. *Proposed aggregate grading*
C. *Mix proportions of hydraulic cement, aggregate and water*
D. *Types and amounts of chemical admixtures, if used*
E. *Initial and Final set time of a 300mm x 300mm x 138mm concrete block curing at 21 + 5°C ambient temperature.*
F. *Range of ambient temperatures over which the mix design will achieve the required minimum 3 hour and 56 day compressive strengths.*

At the Contractor's option, more than one mix design may be submitted to account for ambient temperature variations that exceed the ranges specified herein

FSHCC shall be proportioned and placed by volumetric continuous mixers capable of proportioning cement, water, aggregate and admixtures by volume. Identifying numbers or letters of volumetric continuous mixers shall be located on the front or rear of the equipment. Calibration of the volumetric continuous mixers shall be performed demonstrating that the equipment is capable of delivering the proportioned concrete material per the approved mix design. The volumetric continuous mixers shall produce a log of production data, at no less then 20 minute intervals, showing the proportions of cement, aggregate and water dispatched.

The Contractor shall furnish aggregate moisture determinations per California Test Method 223. During actual placement the percent fine aggregate moisture content to be used shall be limited to a maximum value of 2% more then moisture content determined during calibration.

The aggregate and cement proportioning calibrations shall be determined by weight.

The first 3 volumetric continuous mixers to be used during actual production at the site shall be loaded with all material at least 4 hours prior to placement. A trial mix to be disposed of by the Contractor shall be batched for the Engineer's inspection. The mix size shall be from a minimum 20 second operation of the mixer. At 3 hours after discharge the batched material shall be visibly hard indicating at least a final set.

After the calibration and acceptance of the use of a volumetric continuous mixer, water to account for any allowable change in fine aggregate moisture content may be adjusted just prior to placement. Only the water reducer admixtures, if used, may be adjusted during actual placement.

A Certificate of Compliance in conformance with the provisions in Section 6-1.07, "Certificates of Compliance," of the Standard Specifications shall be furnished with each delivery of aggregate, cement, and admixtures used for calibration tests and shall be submitted to the Engineer with a certified copy of the mass of each delivery.

The concrete curing method shall be as recommended by the manufacturer of the cement and as approved by the Engineer.

Elastomeric Concrete

The contractor shall submit in writing the elastomeric concrete system he proposes to use. Elastomeric concrete shall be a polymer binder material mixed with fiberglass fibers and natural sand. The polymer binder shall be polyurethane, or epoxy, or a combination of epoxy and polyurethane. Elastomeric concrete shall be formulated to be flexible, have high load bearing capacity and be resistant to spalling and cracking.

The Contractor shall furnish and install elastomeric concrete as shown on the plans and in conformance with these special provisions.

Elastomeric concrete shall be mixed, placed, and cured as recommended by the manufacturer, and as approved by the Engineer. A representative of the elastomeric concrete manufacturer shall be present during mixing and placement of elastomeric concrete.

The elastomeric concrete (binder and aggregate) shall have the following physical properties:

ELASTOMERIC CONCRETE (BINDER AND AGGREGATE)		
PROPERTY	REQUIREMENT	TEST METHOD
* Modulus of Elasticity	2000 MPa, maximum, at 24 hours at 21°± 2°C followed by 13 days at 38°± 2°C	California Test 551
* Compressive Stress	7.0 MPa, minimum, at 24 hours at 21°± 2°C followed by 13 days at 38°± 2°C	California Test 551 (Machine crosshead speed @1.3mm per minute.)
* Impact	4 intervals with no cracks, minimum	Ball Drop*
PCC Saturated Surface-Dry Bond Strength	2.1 MPa, minimum at 24 hours and 21 ± 1°C	California Test 551
* Test specimen is a cast disk 63.5 mm in diameter and 9.5 mm thick. Specimens are conditioned four hours at test temperatures of: 40 C (± 2 C), 20 C (± 2 C), 10 C (± 2 C), & 0 C (± 2 C). A 0.45 kg steel ball is dropped onto the center of the specimen through a plastic guiding tube from an initial height of 1500 mm. The drop height is increased by 150 mm intervals.		

The polymer binder shall have the following physical properties:

POLYMER BINDER		
PROPERTY	REQUIREMENT	TEST METHOD
Tensile Strength	3.45 MPa, minimum, at 7 days at 38°± 1°C	ASTM D 412
	3.45 MPa s , minimum, at 24 hours at 21°± 1°C followed by 13 days at 70°± 2°C	ASTM D 412
Elongation	180 percent, minimum, at 7 days at 38°± 1°C	ASTM D 412
	180 percent, minimum, at 24 hours at 21°± 1°C followed by 13 days at 70°± 2°C	ASTM D 412
Hardness, Type D Durometer, points	45, minimum, at 7 days at 38°± 1°C	ASTM D 2240
	45 points, minimum, at 24 hours at 21°± 1°C followed by 13 days at 70°± 2°C	ASTM D 2240

Elastomeric concrete shall not be used until the Engineer has approved the elastomeric concrete submittal in writing, has inspected the materials, and the manufacturer's technical representative has instructed the Contractor and Engineer in the surface preparation, mixing and application of the elastomeric concrete.

At a minimum, cleaning of the contact surfaces of existing concrete shall be accomplished by abrasive blast cleaning. The concrete and any exposed reinforcing steel shall be free of all rust, paint, grease, asphalt or other foreign materials. Steel contact surfaces shall be cleaned by methods approved by the

Engineer to remove all rust, paint, grease, or other foreign materials. Immediately prior to placing the elastomeric concrete, the surfaces shall be re-cleaned by sweeping and pressure jetting, or by other approved means, as necessary to remove any debris which has accumulated during construction or after abrasive blast cleaning. A primer shall be used when recommended by the manufacturer. The surface temperature of the areas to be covered shall be within the manufacturer's recommendations when the elastomeric concrete is placed. Methods proposed to heat said surfaces are subject to approval by the Engineer.

Self-Consolidating Concrete

Self-consolidating concrete shall be ~~flowing concrete~~ capable of spreading without segregation to a level state without the use of internal or external vibrators. Self-consolidating concrete shall conform to "Concrete Structures" of these special provisions and the requirements specified herein.

In addition to the chemical admixtures listed on the Department's current list of approved brands of admixtures that may be used, the Contractor may use a viscosity modifying admixture made by a chemical admixture manufacturer for the purpose of producing a self-consolidating concrete. The use of the viscosity modifying admixture shall be in accordance with the manufacturer's recommendations. The combined aggregate grading shall be any of the four maximum size grading limits specified in Section 90-3.04, "Combined Aggregate Gradings," of the Standard Specifications.

The Contractor's proposed mix design shall be pre-qualified for use in the demonstration pour by trial batch reports in conformance with Section 90-9 "Compressive Strength" of the Standard Specifications except that the consistency shall be measured by the slump flow test and bleeding shall be measured by ASTM Designation, C 232, Method A. The slump flow test shall conform to the requirements in ASTM Designation: C 143 except the following:

A. The cone shall be filled in one lift without rodding. The cone shall be placed on a flat, moist, nonabsorbent, rigid base plate that is at least 700x700 mm. The base plate shall have concentric circle marks showing 200-mm and 500-mm diameter circles.
B. Measure the time it takes for the concrete to reach 500 mm diameter circle. Report this as "Slump Flow Time" to the nearest 0.5 seconds.
C. After the concrete ceases to flow, measure the diameter in 2 perpendicular directions. Report this as "Slump Flow" to the nearest 5 mm.
D. Visually inspect the concrete spread to observe the distribution of coarse aggregate throughout the spread. Measure and record the radial width of any mortar ring without coarse aggregate. If no mortar ring without coarse aggregate exists, report as zero.

Consistency of the self-consolidating concrete shall be determined using the slump flow test method. The self-consolidating concrete shall have a minimum slump flow of 550 mm without segregation. The slump flow shall be selected by the Contractor based on the concrete constituent materials and placement procedures as specified in the approved working drawings.

The percent bleeding shall not exceed 1.5% when determined by ASTM Designation, C 232, Method A except that the container shall be filled in one lift without rodding.

Amendment to California Test 540

The following amendments to California Test 540, "Method of Making, Handling, and Storing Concrete Compressive Test Specimens in the Field," shall only apply to self-consolidating concrete. The Items "a" and "b" under "2. Test Specimen Fabrication" of "C. Preparation of Test Specimens" of California Test 540 shall be amended to read:

a. Place test molds on a firm, flat surface to prevent distortion of the bottom surface. When more than one specimen is to be made from the same batch, make all specimens simultaneously. Fill the mold in one lift with a circular motion of the scoop to distribute the concrete evenly in the mold. Pat sides of the mold lightly by hand, or jig by rocking the mold from side to side.
b. After the sides of the mold have been patted, strike off the surface of the concrete even with the top edge of the mold. Wipe the sides of the mold free of excess concrete and press the lid on to prevent evaporation.

Demonstration Pours

Prior to placing self-consolidating concrete, the Contractor shall construct at least one mock-up to demonstrate that the concrete will flow for the distance required by the proposed construction procedure. The placement of the self-consolidating concrete in the mock-up shall be witnessed by the Engineer. The mock-up shall have a depth and length equal to that of the blockout detailed on the plans. The width of the mock-up shall be selected by the Contractor based on the distance that the concrete is required to flow according to the proposed construction procedure but shall not be less than 2 meters. The mock-up shall include concrete, reinforcement, and all concrete embedments as shown on the plans and approved working drawings, except that all reinforcement and embedments shall stop 300 mm from both longitudinal ends of the blockout so that concrete can be removed later and tested for segregation. The mock-up shall ~~have a~~ *be covered with* removable 27 mm plus or minus 3 mm thick transparent plastic top plate. *The Contractor may submit a proposal for approval using multiple transparent plastic top plates to cover the mock-up instead of a single top plate provided that the plates are adequately tied together and are watertight at the vertical edges where joined together as determined by the Engineer.* The plastic top plate shall have vent holes of the same size and spacing as those in the support plate.

Acceptance criteria of the self-consolidating concrete shall be as follows:

A. Self-consolidating concrete shall flow under the plastic top plate and shall completely fill the void in the blockout.
B. After consolidation against the plastic top plate is verified, the Contractor shall remove the plastic top plate and shall take a sample of at least 45 kg of concrete from each end of the blockout to check for segregation by comparing coarse aggregate content with mix design values. The coarse aggregate content of each sample shall be determined using California Test 529 and shall not differ from the mix design value by more than 110 kg/m^3.
C. The percent bleeding shall not exceed 1.5% when determined by ASTM Designation, C 232, Method A except that the container shall be filled in one lift without rodding.

If the concrete fails to meet any of the acceptance criteria as determined by the Engineer, additional mock-ups shall be constructed at the Contractor's expense.

The mock-up shall not be part of the permanent structure and shall become the property of the Contractor. The mock-up shall be removed from the work site and shall be disposed of in conformance with the provisions in Section 7-1.13, "Disposal of Material Outside the Highway Right of Way," of the Standard Specifications.

The expansion joint system shall be a Trelleborg 2400 modified as shown on the plans and manufactured by the following manufacturer:

Trelleborg Izarra, S.A.U.
C/ Rio Manzanares, Numero 20-22
Poligono Industrial Jose Luis Velasco
28500 Arganda del Rey (Madrid) Spain
Phone: +34 918 701 700
Fax: +34 918 703 465
http://www.trelleborg.com/transflex/

Contact: Laura Ruiz and Juan Carlos Minaya

The Trelleborg 2400 expansion system shall be installed per manufacturer's recommendations.

FABRICATION

The seismic joint shall be fabricated in conformance with the details, dimensions, material specifications, and procedures shown in the approved working drawings.

The roadway riding surface of deck plates shall be machined with the groove pattern shown on the plans.

The surfaces between deck plates and support plates shall be in full contact. The contact surfaces between deck plates and support plates shall be within one millimeter in 300 mm and within 2 mm over the longest dimension of the plate *measured before applying coatings to steel surfaces*.

All plate welds shall be ground smooth. The welds shall not protrude into the sliding surface of the deck plates or support plates.

Sealing compound for caulking between gutter and concrete, as shown on the plans, shall be non-sag or gunnable sealant conforming to the requirements in ASTM Designation: C 920 and shall be Type NS. The sealing compound shall cure as recommended by the manufacturer prior to painting.

Cleaning and painting of all new metal surfaces of the seismic joints, except where embedded in concrete, shall conform to the requirements specified in "Clean and Paint Structural Steel (Seismic Joint, Spherical Bushing Bearing, and Shear Key)" of these special provisions.

Damage to the seismic joint during shipping or handling shall be cause for rejection of the seismic joint.

Damage to the corrosion protection system shall be repaired to the satisfaction of the Engineer prior to installation.

INSTALLATION

Each seismic joint shall be installed in accordance with the approved working drawings.

The maximum gap between sliding surfaces shall not exceed 2 mm in any ~~loaded or~~ unloaded position.

Each installed seismic joint shall match the finished roadway profile and grades as shown on the plans.

The Contractor shall protect the seismic joint from damage. The Contractor shall protect concrete blockouts and support systems from damage and construction traffic prior to installation of the seismic joints.

Sealing elements not fully bonded to the steel extrusions shall be replaced by the Contractor at the Contractor's expense.

The bridge deck surface shall conform to the provisions in "Epoxy Asphalt Concrete Surfacing" of these special provisions after installation of seismic joints.

DRILL AND BOND DOWELS

Drilling and bonding seismic joint anchors shall conform to the details shown on the plans, the provisions in Section 83-2.02D(1), "General," of the Standard Specifications, and these special provisions.

Seismic joint anchors shall be supplied by the seismic joint manufacturer.

MEASUREMENT AND PAYMENT

The contract lump sum price paid for seismic joint at the locations listed in the Engineer's Estimate shall include full compensation for furnishing all labor, materials, tools, equipment and incidentals, and for doing all the work involved in fabricating, furnishing, transporting, storing, and installing the seismic joints, including *fast setting hydraulic cement concrete, elastomeric concrete,* self-consolidating concrete, bar reinforcing steel, neoprene sheets, gutter, anchorage components, mock-up construction, protecting, repairing, cleaning and painting, *and drilling and bonding dowels,* complete in place, as shown on the plans, as specified in the Standard Specifications and these special provisions, and as directed by the Engineer.

If a portion or all of the structural steel for use in the seismic joint is fabricated more than 480 air line kilometers from both Sacramento and Los Angeles, additional shop inspection expenses will be sustained by the State. Whereas it is and will be impracticable and extremely difficult to ascertain and determine the actual increase in these expenses, it is agreed that payment to the Contractor for furnishing the structural steel for the seismic joint from each fabrication site located more than 480 air line kilometers from both Sacramento and Los Angeles will be reduced $5000 or by an amount computed at $0.044 per kilogram of structural steel fabricated, whichever is greater, or in the case of each fabrication site located more than

4800 air line kilometers from both Sacramento and Los Angeles, payment will be reduced $8000 or by $0.079 per kilogram of structural steel fabricated, whichever is greater.

Epoxy asphalt concrete will be measured and paid for separately as specified in "Epoxy Asphalt Concrete Surfacing" of these special provisions.

Furnishing and erecting bikepath expansion joints including cover plates will be measured and paid for as furnish structural steel (bridge) (bikepath) and erect structural steel (bridge) (bikepath), respectively.

Steel barrier will be measured and paid for separately as specified in "Steel Barrier" of these special provisions.

10-1.70 CLEAN AND PAINT STRUCTURAL STEEL ~~(MODULAR JOINT SEAL ASEMBLY~~, (SEISMIC JOINT, SPHERICAL BUSHING BEARING, AND SHEAR KEY)

Clean and paint structural steel ~~(Modular Joint Seal Assembly,~~ *(Seismic Joint*, Spherical Bushing Bearing, and Shear Key) shall consist of cleaning and painting the following structural steel components:

A. Seismic Joint
B. Spherical Bushing Bearing at Pier E2
C. Shear Key at Pier E2
D. Spherical bushing ring bearing at Hinge K

Exposed new metal surfaces, except where galvanized, shall be cleaned and painted in conformance with the provisions in Section 59-2, "Painting Structural Steel," and Section 91, "Paint," of the Standard Specifications and these special provisions.

All new metal surfaces of the seismic joint, including sliding surfaces, shall be cleaned and painted, except where galvanized, in conformance with the requirements specified herein.

REGISTERED PROFESSIONAL ENGINEER
STEVE MARGARIS
No. 36845
Exp. 6/2012
CIVIL
STATE OF CALIFORNIA

DIST.	COUNTY	ROUTE	KILOMETER POST TOTAL PROJECT	SHEET NO.	TOTAL SHEETS
04	SF	80	13.2/13.9	852R3	1204

REGISTERED ENGINEER - CIVIL

12-6-04
PLANS APPROVAL DATE

REGISTERED PROFESSIONAL ENGINEER Marwan N. Nader No. C 054426 Exp. 12/31/11 CIVIL STATE OF CALIFORNIA

The State of California or its officers or agents shall not be responsible for the accuracy or completeness of electronic copies of this plan sheet.

T.Y. LIN / MOFFATT & NICHOL
825 BATTERY STREET
SAN FRANCISCO, CA 94111

Caltrans now has a web site! To get to the web site, go to: http://www.dot.ca.gov

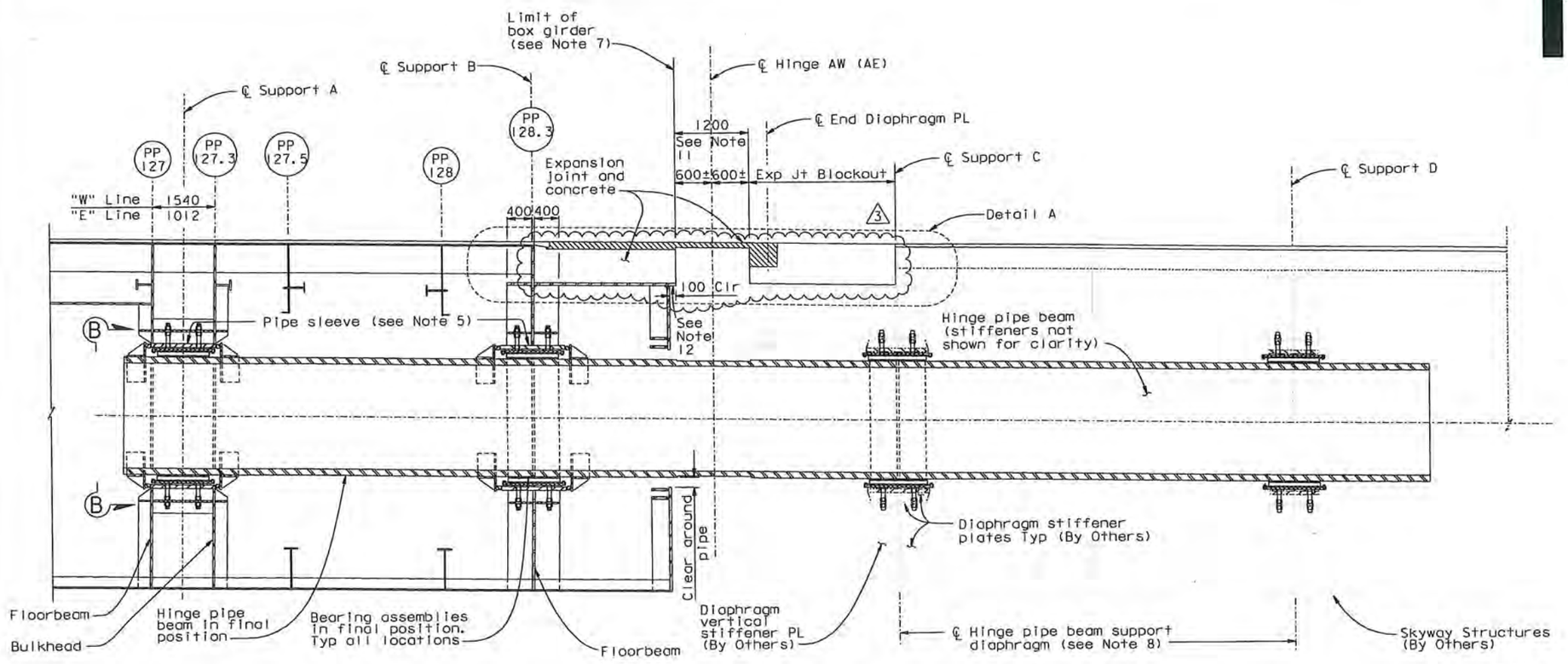

SECTION A-A (Orientation of Expansion Joint shown for Eastbound, see Note 10)
1:40

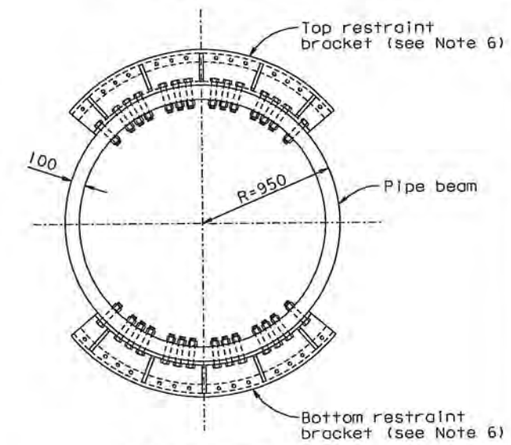

END VIEW B-B
1:20

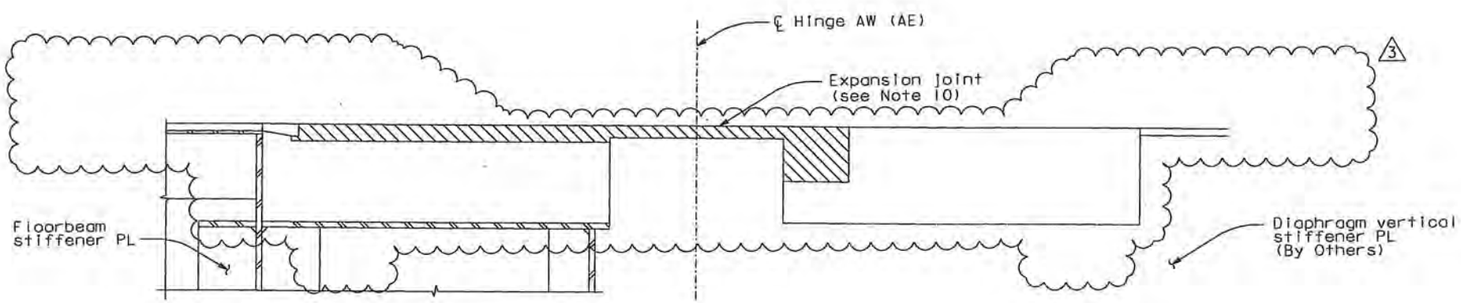

DETAIL A
1:20

NOTES:

1. For locations and alignment of floor beams at PP127, PP127.5 and PP128, see "Girder Framing Plan No.4" sheet.
2. Bulkhead at PP127.3 is parallel to the floor beam at PP 127.
3. Floorbeam at PP 128.3 is parallel to ℄ Hinge A. For locations, see "Hinge A Geometry Layout" sheets.
4. For expansion joint details, see "Hinge A Expansion Joint Details" sheets.
5. Pipe sleeve shall be parallel to pipe beam.
6. For restraint bracket details, see "Hinge A Details No.9" sheet.
7. For girder details east of PP 128.3, see "Girder At East Transition No.8" and "Floorbeam At East Transition No.10" sheets.
8. For hinge bearing support location, see "Hinge A Geometry Layout" sheets.
9. For "Hinge A Details" sheets, the Contractor shall verify all controlling field dimensions before ordering or fabricating any material.
10. For orientation of expansion joints, see "Hinge A Expansion Joint Details" plans. 3
11. The as-built gap at Hinge A shall be 1200 minimum. The limit of the concrete blockout shall be adjusted based on the field conditions of the Skyway.
12. The Contractor shall trim the blockout end PL and blockout bottom PL to maintain an expansion gap of 1200 minimum.

CONTRACT CHANGE ORDER NO. 25 50
SHEET 15 OF 36

REQUESTS FOR INFORMATION NOT ADDRESSED IN THIS CCO REMAIN IN FORCE

MARK	DATE	DESCRIPTIONS	BY	CH'D	CCO#
3	07/30/10	SEISMIC JOINT MODIFICATIONS HINGE A	CR	MN	25
2	04/09/10	HINGE A MODIFICATIONS	MN	NV	120
1	11/06/06	PER CALTRANS SEISMIC JOINT MODIFICATION	MN	AS	25

REVISIONS

R. Vollzadeh/V. Toan/Y.L./W.L./F.C.
DESIGN OVERSIGHT
SIGN OFF DATE 07/30/10

Rev. Date: 5-18-95

DESIGN	BY M. Nader	CHECKED N. Vo
DETAILS	BY G. Baker	CHECKED N. Vo
QUANTITIES	BY G. Baker	CHECKED N. Vo

PREPARED FOR THE STATE OF CALIFORNIA DEPARTMENT OF TRANSPORTATION

ORIGINAL SCALE IN MILLIMETERS FOR REDUCED PLANS 0 10 20 30 40 50 60 70 80 90 100

ALL DIMENSIONS ARE IN MILLIMETERS UNLESS OTHERWISE SHOWN

R. Manzanarez
PROJECT ENGINEER

CU 04
EA 0120F1

BRIDGE NO. 34-0006L/R
KILOMETER POST 13.2/13.9

DISREGARD PRINTS BEARING EARLIER REVISION DATES

REVISION DATES (PRELIMINARY STAGE ONLY) 07/17/01 04/08/02 07/24/02 12/13/02 07/15/03

SAN FRANCISCO OAKLAND BAY BRIDGE
EAST SPAN SEISMIC SAFETY PROJECT
SELF-ANCHORED SUSPENSION BRIDGE
(SUPERSTRUCTURE & TOWER)

HINGE A DETAILS NO. 1

SHEET 435R3 OF

FILE => I:\bb\04-012001\sas\contract plans and cco\cco\cco#25\5-revision 07-30-10\dgn\ahhng01.dgn

100 % PS&E

USERNAME => arivero DATE PLOTTED => 30 JUL 2010 TIME PLOTTED => 11:34:01

DIST.	COUNTY	ROUTE	KILOMETER POST TOTAL PROJECT	SHEET NO.	TOTAL SHEETS
04	SF	80	13.2/13.9	863R3	1204

REGISTERED ENGINEER - CIVIL

12-6-04
PLANS APPROVAL DATE

REGISTERED PROFESSIONAL ENGINEER Marwan N. Nader No. C 054426 Exp. 12/31/11 CIVIL STATE OF CALIFORNIA

The State of California or its officers or agents shall not be responsible for the accuracy or completeness of electronic copies of this plan sheet.

T.Y. LIN / MOFFATT & NICHOL
825 BATTERY STREET
SAN FRANCISCO, CA 94111

Caltrans now has a web site! To get to the web site, go to: http://www.dot.ca.gov

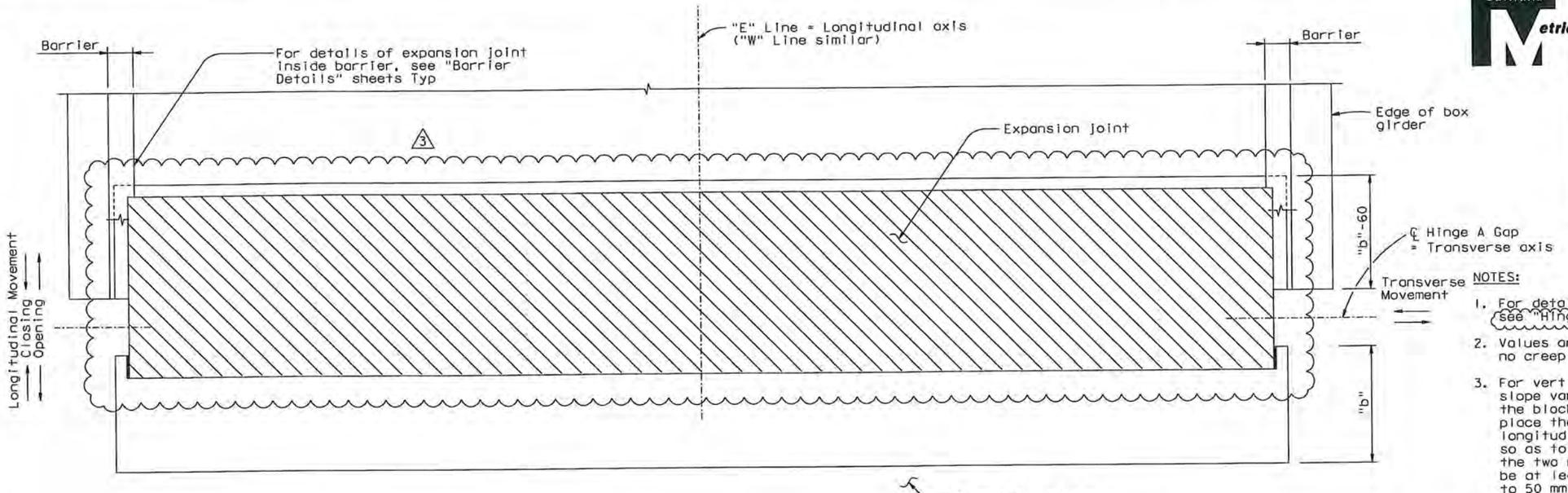

3 LAYOUT-EXPANSION JOINT
1:50

NOTES:

1. For details and orientation of expansion joint, see "Hinge A Expansion Joint Detail No. 3" sheet. 3
2. Values are for mean temperature of 20°C and no creep and shrinkage.
3. For vertical misalignment due to profile or cross slope variance between the Skyway and SAS girders the blockout concrete depth shall be varied to place the expansion joint following the longitudinal slope with constant cross slope so as to have a smooth transition between the two roadways. The deck overlay shall be at least 25 mm thick and shall be run off to 50 mm thick at a rate no steeper than 1:100. Prior to installing the expansion joint the Contractor shall conduct an as-built survey and submit the proposed layout of the expansion joint for review and approval. 3
4. For blockout dimensions "b" & "c", see "Hinge A Expansion Joint Details No. 2" sheet.

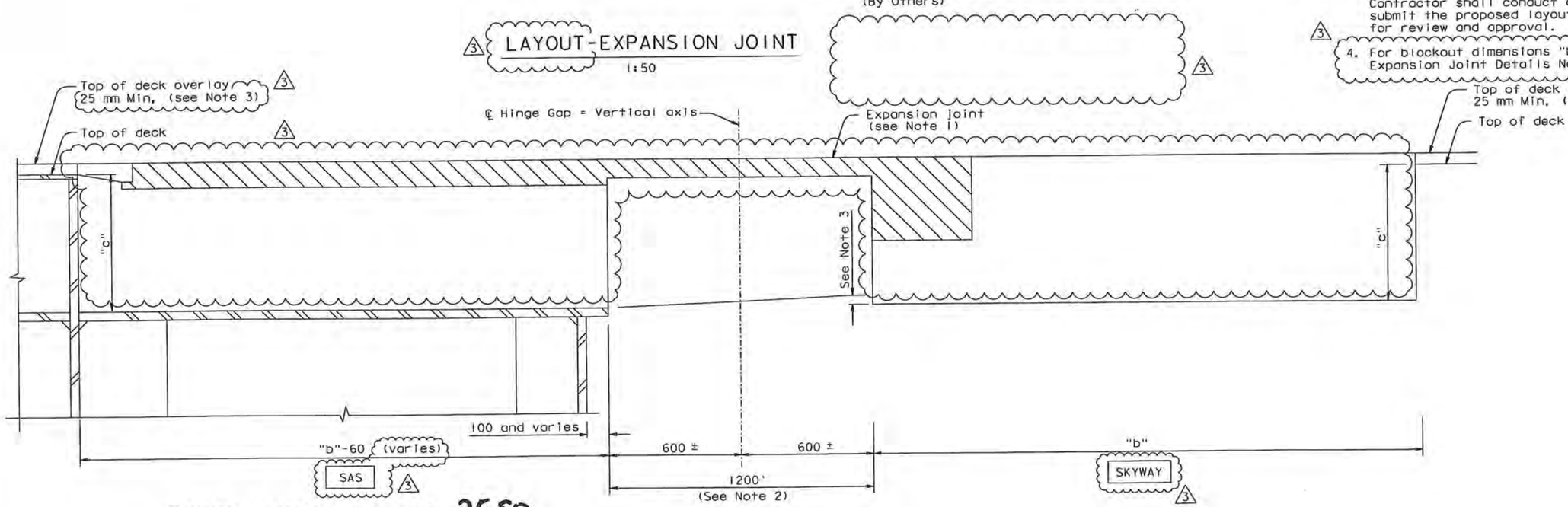

TYPICAL SECTION
1:10

ALL DIMENSIONS ARE IN MILLIMETERS UNLESS OTHERWISE SHOWN

CONTRACT CHANGE ORDER NO. 2550
SHEET 16 OF 36

REQUESTS FOR INFORMATION NOT ADDRESSED IN THIS CCO REMAIN IN FORCE

MARK	DATE	DESCRIPTIONS	BY	CH'D	CCO#
3	07/30/10	SEISMIC JOINT MODIFICATIONS HINGE A	CR	MN	25
2	04/09/10	HINGE A MODIFICATIONS	MN	NV	120
1	11/06/06	PER CALTRANS SEISMIC JOINT MODIFICATIONS	MN	AS	25

REVISIONS

R. Valtzadeh/V. Toon/Y.L./W.L./F.C.
DESIGN OVERSIGHT
SIGN OFF DATE 07/30/10

Rev. Date: 5-18-98

	BY	CHECKED
DESIGN	M. Nader	N. Vo
DETAILS	J. Krizek	N. Vo
QUANTITIES	J. Krizek	N. Vo

PREPARED FOR THE STATE OF CALIFORNIA DEPARTMENT OF TRANSPORTATION

R. Manzanarez
PROJECT ENGINEER

BRIDGE NO. 34-0006L/R
KILOMETER POST 13.2/13.9

SAN FRANCISCO OAKLAND BAY BRIDGE
EAST SPAN SEISMIC SAFETY PROJECT
SELF-ANCHORED SUSPENSION BRIDGE
(SUPERSTRUCTURE & TOWER)

HINGE A EXPANSION JOINT DETAILS NO. 1

ORIGINAL SCALE IN MILLIMETERS FOR REDUCED PLANS 0 10 20 30 40 50 60 70 80 90 100

CU 04
EA 0120F1

DISREGARD PRINTS BEARING EARLIER REVISION DATES

REVISION DATES (PRELIMINARY STAGE ONLY) 01/08/03 01/30/03 12/18/03 07/18/03

SHEET 446R3 OF

FILE => I:\bb\04-01200I\sas\contract plans and cco\cco\cco#25\5-revision 07-30-10\dgn\akjnt03.dgn

100 % PS&E

DATE PLOTTED => 30 JUL 2010 TIME PLOTTED => 11:42:36

USERNAME => arivera

DIST.	COUNTY	ROUTE	KILOMETER POST TOTAL PROJECT	SHEET NO.	TOTAL SHEETS
04	SF	80	13.2/13.9	864R1	1204

REGISTERED ENGINEER - CIVIL

12-06-04

PLANS APPROVAL DATE

The State of California or its officers or agents shall not be responsible for the accuracy or completeness of electronic copies of this plan sheet.

REGISTERED PROFESSIONAL ENGINEER Marwan N. Nader No. C 054426 Exp. 12/31/11 CIVIL STATE OF CALIFORNIA

T.Y. LIN / MOFFATT & NICHOL
825 BATTERY STREET
SAN FRANCISCO, CA 94111

Caltrans now has a web site! To get to the web site, go to: http://www.dot.ca.gov

Caltrans Metric

EXPANSION JOINT MOVEMENT DATA

Location	Longitudinal movement demand (includes effect due to rotation @ vertical axis - SEE) (includes effect due to rotation @ trans axis - Live)							Transverse movement demand	Rotation demand (SEE)		
	Closing			Opening					@ vertical axis	@ transverse axis	@ longitudinal axis
	Trise	SEE	Live	CS	Tdrop	SEE	Live				
	(mm)	(mm)	(mm)	(mm)	(mm)	(mm)	(mm)	(mm)	(rad)	(rad)	(rad)
Hinge AW, AE	179	1140	62	160	179	1170	16	24	0.009	0.037	0.008

LEGEND:

Trise - Uniform temperature rise and positive temperature gradient

Tdrop - Uniform temperature drop and negative temperature gradient

CS - Creep and shrinkage (includes a factor of 1.5 over calculated theoretical values at the inception of Skyway)

SEE - Safety Evaluation Earthquake

BLOCKOUT DIMENSIONS

Hinge	Blockout Data		Deck overlay thickness (mm)
	"b" (mm)	"c" (mm)	
AW, AE	2465	625	Varies

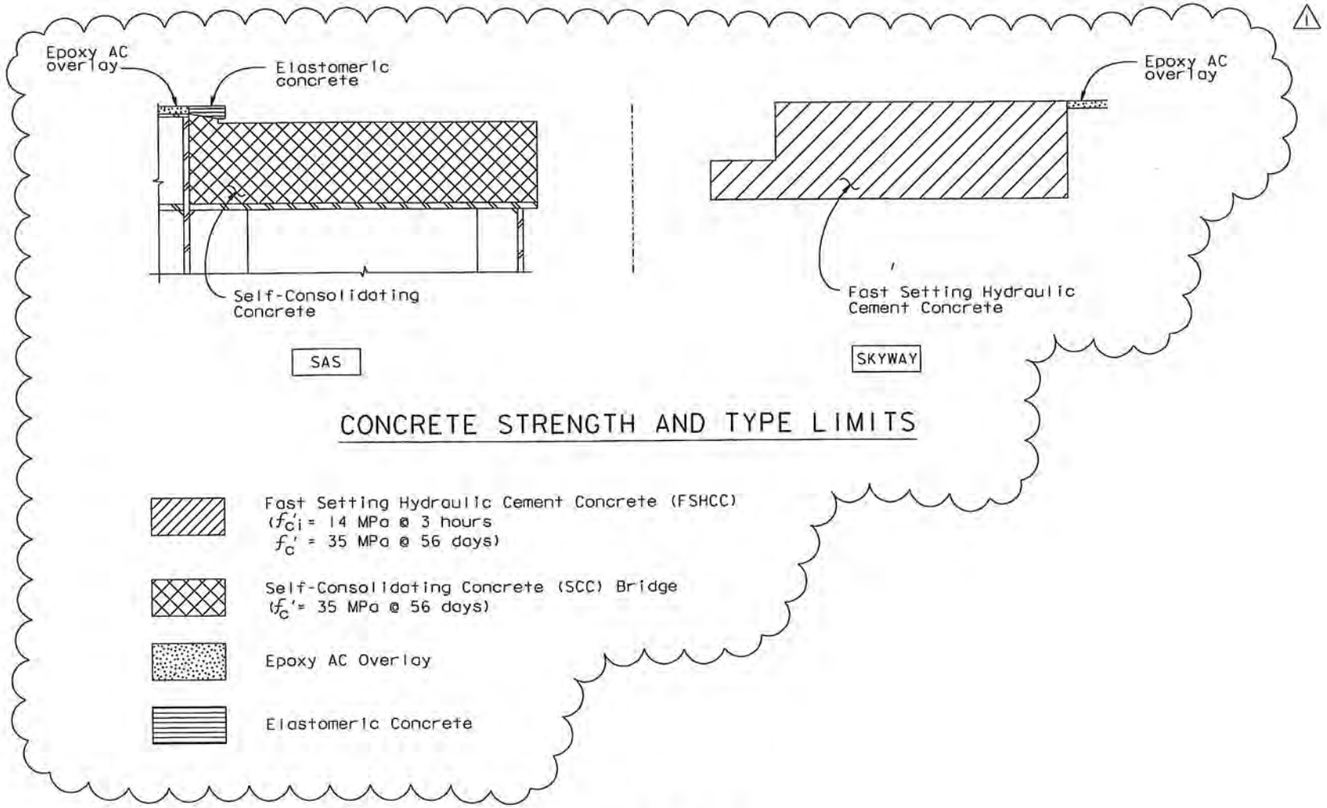

CONTRACT CHANGE ORDER NO. 2550
SHEET 17 OF 36

REQUESTS FOR INFORMATION NOT ADDRESSED IN THIS CCO REMAIN IN FORCE

ALL DIMENSIONS ARE IN MILLIMETERS UNLESS OTHERWISE SHOWN

R. Valizadeh/V. Toan/Y.L./W.L./F.C.
DESIGN OVERSIGHT
Roger Valizadeh / Vong Toan / Y. Liu
SIGN OFF DATE 07/30/10

MARK	DATE	DESCRIPTIONS	BY	CH'D	CCO#
1	07/30/10	SEISMIC JOINT MODIFICATIONS HINGE A	CR	MN	25

REVISIONS

DESIGN	BY M. Nader	CHECKED N. Vo	
DETAILS	BY J. Krizek	CHECKED N. Vo	
QUANTITIES	BY J. Krizek	CHECKED N. Vo	

PREPARED FOR THE STATE OF CALIFORNIA DEPARTMENT OF TRANSPORTATION

R. Manzanarez
PROJECT ENGINEER

BRIDGE NO. 34-0006L/R
KILOMETER POST 13.2/13.9

SAN FRANCISCO OAKLAND BAY BRIDGE
EAST SPAN SEISMIC SAFETY PROJECT
SELF-ANCHORED SUSPENSION BRIDGE
(SUPERSTRUCTURE & TOWER)

HINGE A EXPANSION JOINT DETAILS NO. 2

Rev. Date: 5-18-98

ORIGINAL SCALE IN MILLIMETERS FOR REDUCED PLANS 0 10 20 30 40 50 60 70 80 90 100

CU 04
EA 0120F1

DISREGARD PRINTS BEARING EARLIER REVISION DATES

REVISION DATES (PRELIMINARY STAGE ONLY) 04/08/02 07/01/02 12/19/02 07/18/03

SHEET 447R OF

FILE => I:\bb\04-012001\sas\contract plans and cco\cco\cco#25\5-revision 07-30-10\dgn\akjnt01.dgn

100 % PS&E

USERNAME => arivera DATE PLOTTED => 30 JUL 2010 TIME PLOTTED => 11:35:18

DIST.	COUNTY	ROUTE	KILOMETER POST TOTAL PROJECT	SHEET NO.	TOTAL SHEETS
04	SF	80	13.2/13.9	864S1	1204

REGISTERED ENGINEER - CIVIL

07-30-10

PLANS APPROVAL DATE

REGISTERED PROFESSIONAL ENGINEER Marwan N. Nader No. C 054426 Exp. 12/31/11 CIVIL STATE OF CALIFORNIA

The State of California or its officers or agents shall not be responsible for the accuracy or completeness of electronic copies of this plan sheet.

T.Y. LIN / MOFFATT & NICHOL
825 BATTERY STREET
SAN FRANCISCO, CA 94111

Caltrans now has a web site! To get to the web site, go to: http://www.dot.ca.gov

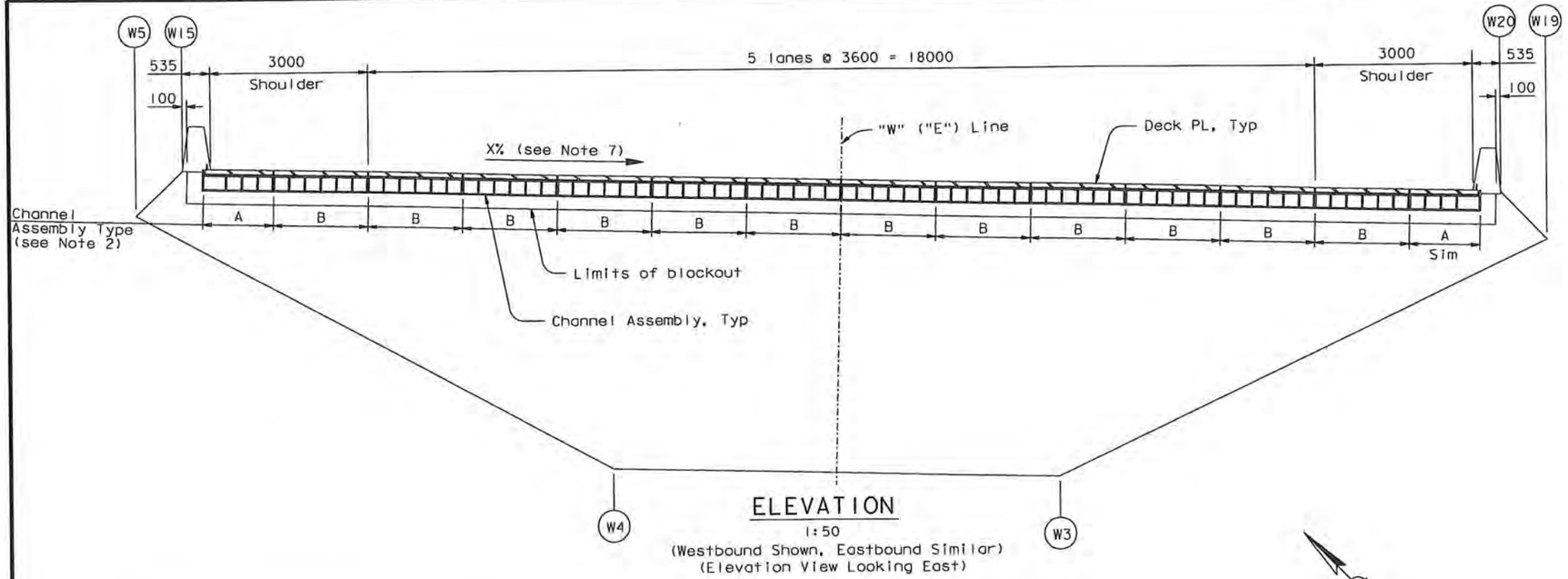

ELEVATION

1:50

(Westbound Shown, Eastbound Similar)
(Elevation View Looking East)

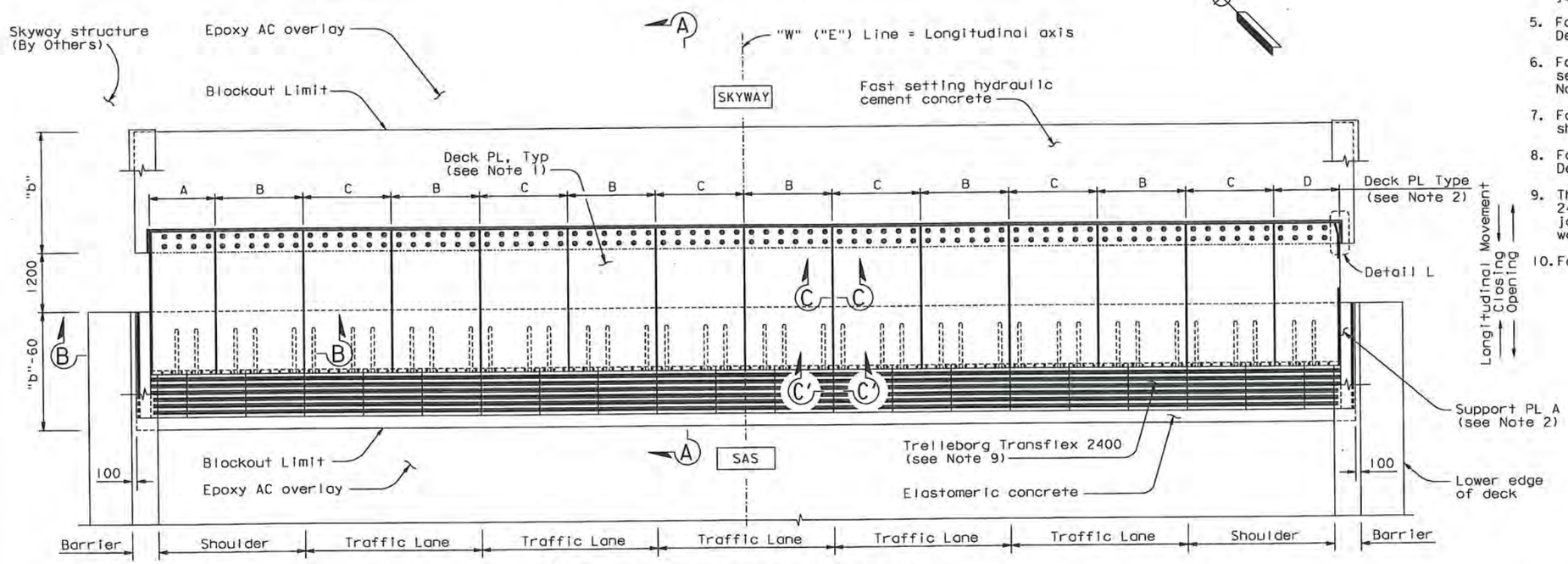

PLAN-EXPANSION JOINT

1:50

(Westbound Shown, Eastbound Similar)

NOTES:

1. For Deck Plates A, B, C and D, see "Hinge A Expansion Joint Details No.5" sheet.
2. Deck Plate A and D matches with Support Plate A and the Channel Assembly A (Module A). Deck Plate B and C matches with Support Plate B and the Channel Assembly B (Module B). For details, see "Hinge A Expansion Joint Details No.5" and "Hinge A Expansion Joint Details No.7" sheets.
3. One module "B" is placed per half traffic lane.
4. Portions of barriers are not shown for clarity. For barrier details at expansion joint, see "Barrier Details" sheets.
5. For Section A-A, see "Hinge A Expansion Joint Details No.4" sheet.
6. For Section B-B, Section C-C & Section C'-C', see "Hinge A Expansion Joint Details No.5" sheet.
7. For cross slope, see "Barrier Details No.5" sheet.
8. For Detail L, see "Hinge A Expansion Joint Details No.8" sheet.
9. The expansion joint shall be 1200 wide Transflex 2400 module with movement rating of 600. The joint between the Transflex modules shall be water tight.
10. For general notes, see "General Notes" sheets.

CONTRACT CHANGE ORDER NO. 2550
SHEET 18 OF 36

REQUESTS FOR INFORMATION NOT ADDRESSED IN THIS CCO REMAIN IN FORCE

ALL DIMENSIONS ARE IN MILLIMETERS UNLESS OTHERWISE SHOWN

R. Vallzadeh/V. Toan/Y.L./W.L./F.C.
DESIGN OVERSIGHT
SIGN OFF DATE 07/30/10

MARK	DATE	DESCRIPTIONS	BY	CH'D	CCO#
0	07/30/10	SEISMIC JOINT MODIFICATIONS HINGE A	CR	MN	25

REVISIONS

	BY	CHECKED
DESIGN	C. Redfield	M. Nader
DETAILS	H. Patel	M. Benoit
QUANTITIES	H. Patel	J. Duxbury

PREPARED FOR THE STATE OF CALIFORNIA DEPARTMENT OF TRANSPORTATION

R. Manzanarez
PROJECT ENGINEER

BRIDGE NO. 34-0006L/R
KILOMETER POST 13.2/13.9

SAN FRANCISCO OAKLAND BAY BRIDGE
EAST SPAN SEISMIC SAFETY PROJECT
SELF-ANCHORED SUSPENSION BRIDGE
(SUPERSTRUCTURE & TOWER)

HINGE A EXPANSION JOINT DETAILS NO.3

Rev. Date: 5-18-98

ORIGINAL SCALE IN MILLIMETERS FOR REDUCED PLANS 0 10 20 30 40 50 60 70 80 90 100

CU 04
EA 0120F1

DISREGARD PRINTS BEARING EARLIER REVISION DATES → 07/30/10

REVISION DATES (PRELIMINARY STAGE ONLY)

SHEET 447S1 OF

FILE => I:\bb\04-0120F1\sas\contract plans and cco\cco\cco#25\5-revision 07-30-10\dgn\akjnt01a.dgn

100 % PS&E

USERNAME => ariverc DATE PLOTTED => 30 JUL 2010 TIME PLOTTED => 11:36:24

DIST.	COUNTY	ROUTE	KILOMETER POST TOTAL PROJECT	SHEET NO.	TOTAL SHEETS
04	SF	80	13.2/13.9	864S2R2	1204

REGISTERED ENGINEER - CIVIL

07-30-10

PLANS APPROVAL DATE

REGISTERED PROFESSIONAL ENGINEER Marwan N. Nader No. C 054426 Exp. 12/31/11 CIVIL STATE OF CALIFORNIA

The State of California or its officers or agents shall not be responsible for the accuracy or completeness of electronic copies of this plan sheet.

T.Y. LIN / MOFFATT & NICHOL
825 BATTERY STREET
SAN FRANCISCO, CA 94111

Caltrans now has a web site! To get to the web site, go to: http://www.dot.ca.gov

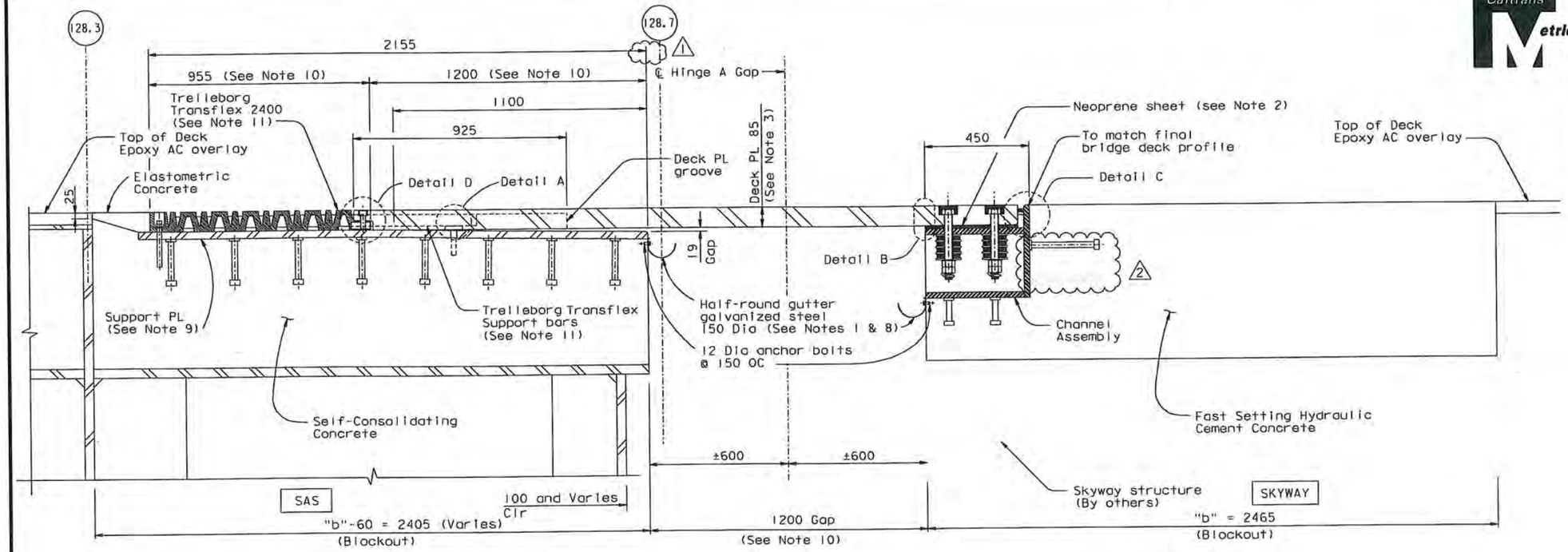

SECTION A-A

1:10

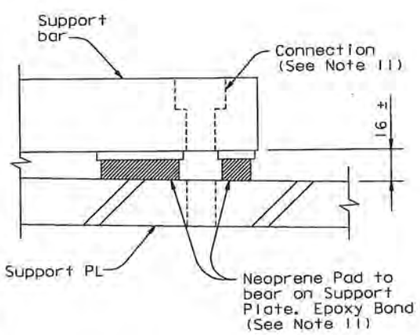

DETAIL A

1:2

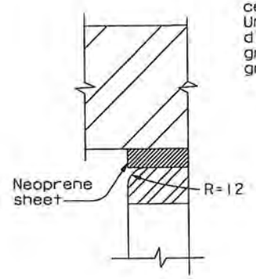

DETAIL B

1:2

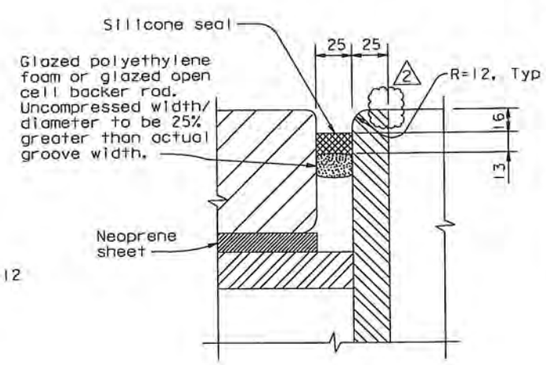

DETAIL C

1:2

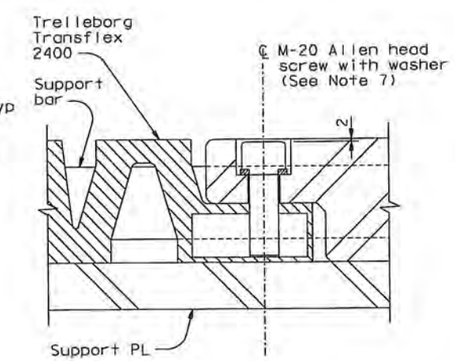

DETAIL D

1:2

NOTES:

1. Use caulking or sealant between gutter and concrete.
2. 40 mm holes in neoprene sheets shall be drilled or punched so that the neoprene is not distorted at the time of installation. See "Hinge A Expansion Joint Details No. 8" sheet.
3. For deck plate layout and details, see "Hinge A Expansion Joint Details No. 3" sheet. For deck plate friction groove pattern, see "Hinge A Expansion Joint Details No. 6" sheet.
4. For mild steel reinforcement in blockout areas, see "Hinge A Expansion Joint Details No. 10" sheet.
5. For channel assembly details, see "Hinge A Expansion Joint Details No. 7" and "Hinge A Expansion Joint Details No. 8" sheets.
6. Place deck plate, support plate and channel assembly so that full bearing is achieved between i) deck plate and channel assembly and ii) deck plate and support plates as shown in Section A-A.
7. M-20 Allen head screw shall be stainless steel.
8. Gutter shall be placed on the same side as the support plate, 75 mm minimum from the deck plate. Gutter shall be parallel to deck cross slope.
9. For support plate details see "Hinge A Expansion Joint Details No. 9" sheet.
10. Values are for mean temperature of 20° C.
11. All the connection hardware shall be supplied with Trelleborg Transflex 2400. The connection of Transflex 2400 and that of the support bar to the blockout concrete shall be drill and bond dowels.

CONTRACT CHANGE ORDER NO. 25 SO
SHEET 19 OF 36

REQUESTS FOR INFORMATION NOT ADDRESSED IN THIS CCO REMAIN IN FORCE

MARK	DATE	DESCRIPTIONS	BY	CH'D	CCO#
2	12/30/10	SEISMIC JOINT MODIFICATIONS HINGE A	CR	MN	25
1	10/22/10	SEISMIC JOINT MODIFICATIONS HINGE A	CR	MN	25
0	07/30/10	SEISMIC JOINT MODIFICATIONS HINGE A	CR	MN	25

REVISIONS

R. Valizadeh/V. Toan/Y. L. /W. L. /F. C.
DESIGN OVERSIGHT
SIGN OFF DATE 12/30/10

Rev. Date: 5-18-98

DESIGN BY C. Redfield CHECKED M. Nader
DETAILS BY H. Patel CHECKED M. Benolt
QUANTITIES BY H. Patel CHECKED J. Duxbury

PREPARED FOR THE STATE OF CALIFORNIA DEPARTMENT OF TRANSPORTATION

ALL DIMENSIONS ARE IN MILLIMETERS UNLESS OTHERWISE SHOWN

R. Manzanarez
PROJECT ENGINEER

BRIDGE NO. 34-0006L/R
KILOMETER POST 13.2/13.9

CU 04
EA 0120F1

ORIGINAL SCALE IN MILLIMETERS FOR REDUCED PLANS 0 10 20 30 40 50 60 70 80 90 100

DISREGARD PRINTS BEARING EARLIER REVISION DATES → 01/30/10

REVISION DATES (PRELIMINARY STAGE ONLY)

SHEET 447S2R2 OF

SAN FRANCISCO OAKLAND BAY BRIDGE
EAST SPAN SEISMIC SAFETY PROJECT
SELF-ANCHORED SUSPENSION BRIDGE
(SUPERSTRUCTURE & TOWER)

HINGE A EXPANSION JOINT DETAILS NO. 4

FILE => I:\bb\04-012001\sas\contract plans and cco\cco\cco#25\7-revision 12-30-10\dgn\akjnt01b.dgn

100 % PS&E

USERNAME => DMTHROW DATE PLOTTED => 30 DEC 2010 TIME PLOTTED => 13:20:53

DIST.	COUNTY	ROUTE	KILOMETER POST TOTAL PROJECT	SHEET NO.	TOTAL SHEETS
04	SF	80	13.2/13.9	864S3R1	1204

REGISTERED ENGINEER - CIVIL

07-30-10
PLANS APPROVAL DATE

REGISTERED PROFESSIONAL ENGINEER Marwan N. Nader No. C 054426 Exp. 12/31/11 CIVIL STATE OF CALIFORNIA

The State of California or its officers or agents shall not be responsible for the accuracy or completeness of electronic copies of this plan sheet.

T.Y. LIN / MOFFATT & NICHOL
825 BATTERY STREET
SAN FRANCISCO, CA 94111

Caltrans now has a web site! To get to the web site, go to: http://www.dot.ca.gov

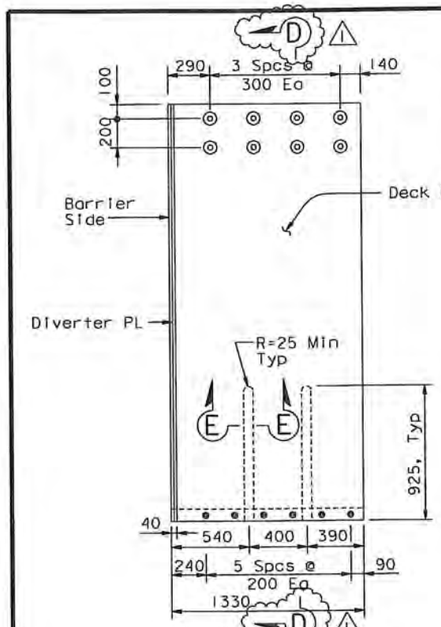

DECK PLATE A
1:20

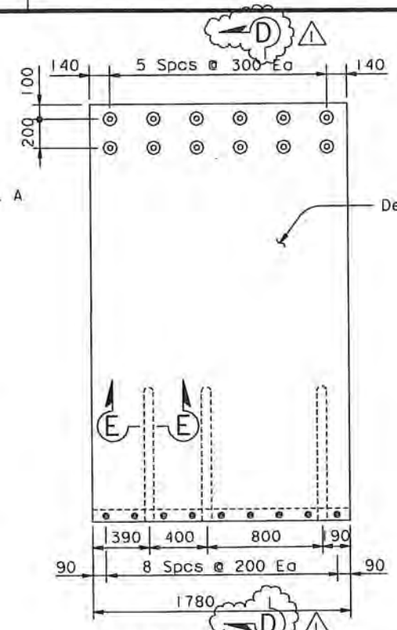

DECK PLATE B
1:20

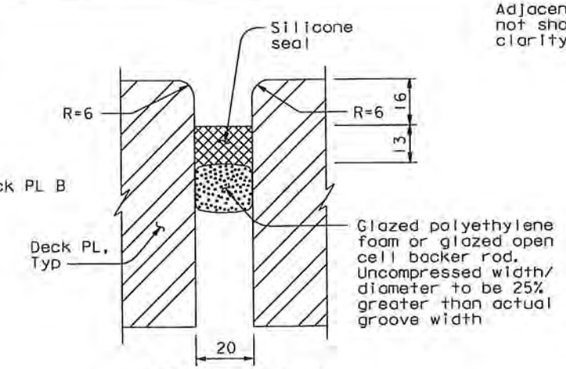

SECTION C-C
1:1

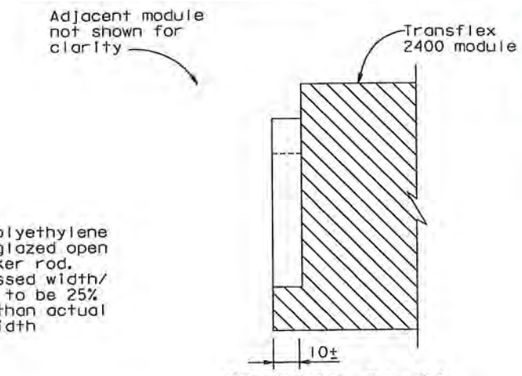

SECTION C'-C'
1:1

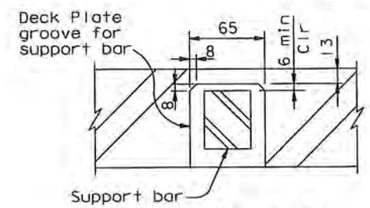

SECTION E-E
1:2.5

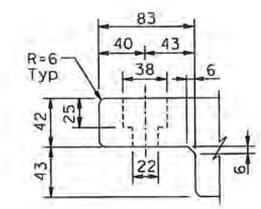

DETAIL E
1:2.5

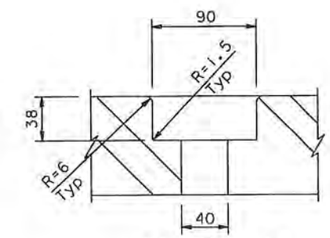

DETAIL F
1:2.5

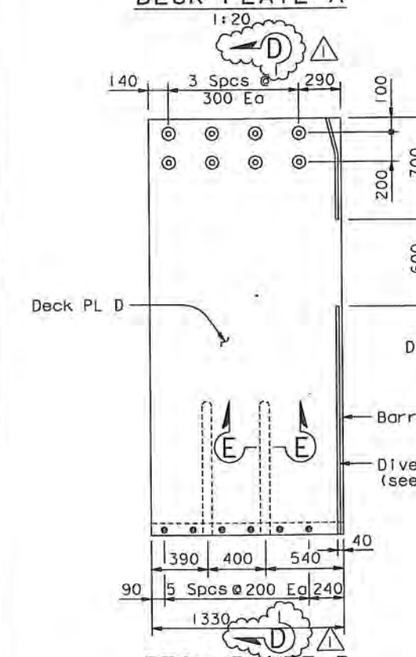

DECK PLATE D
1:20

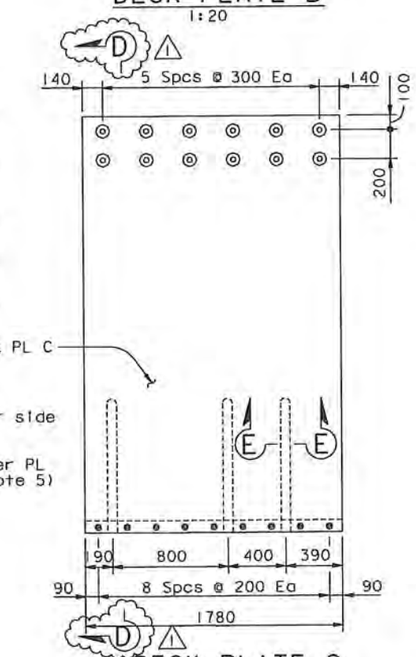

DECK PLATE C
1:20

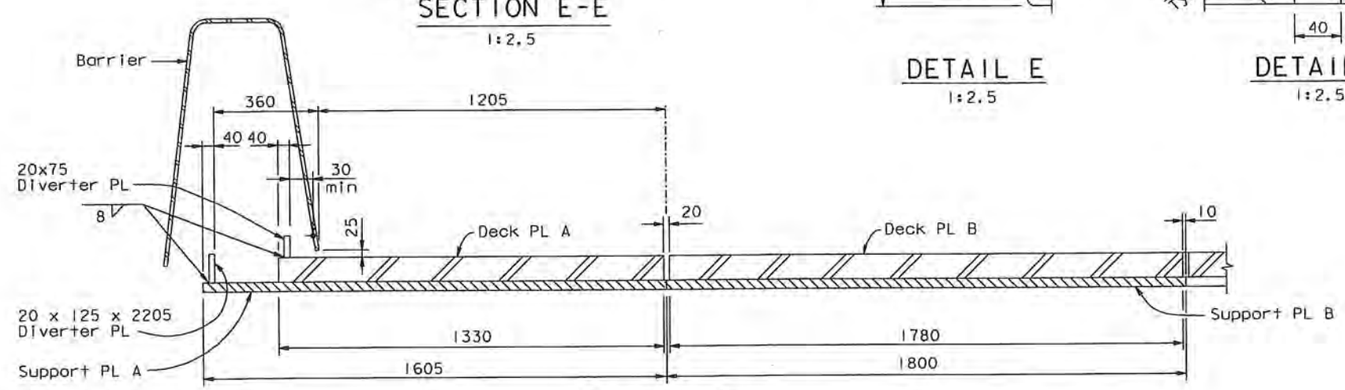

SECTION B-B
1:10

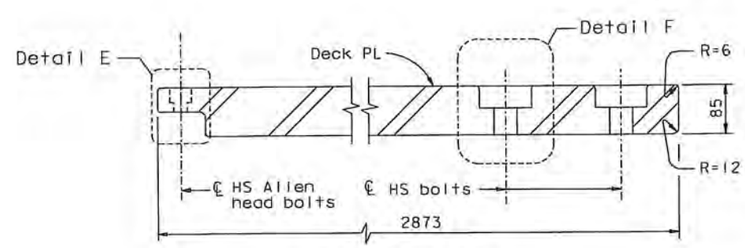

SECTION D-D
1:5

NOTES:

1. For deck plate plan see "Hinge A Expansion Joint Details No. 3" sheet.
2. Diverter plate applies to Deck plates A and D and Support plate A only.
3. For bolting of deck plates to channel assembly details, see "Hinge A Expansion Joint Details No. 8" sheet.
4. For connection detail between Trelleborg Transflex 2400 and deck plate see, "Hinge A Expansion Joint Details No. 4" sheet.
5. For diverter plate detail on Deck PL D, see Detail L on "Hinge A Expansion Joint Details No. 8" sheet.

CONTRACT CHANGE ORDER NO. 25SO
SHEET 20 OF 36

REQUESTS FOR INFORMATION NOT ADDRESSED IN THIS CCO REMAIN IN FORCE

ALL DIMENSIONS ARE IN MILLIMETERS UNLESS OTHERWISE SHOWN

R. Vallizadeh/V. Toan/Y.L./W.L./F.C.
DESIGN OVERSIGHT
Roya Vallizadeh / Vong Toan / Y. Liu
SIGN OFF DATE 12/30/10

MARK	DATE	DESCRIPTIONS	BY	CH'D	CCO#
1	12/30/10	SEISMIC JOINT MODIFICATIONS HINGE A	CR	MN	25
0	07/30/10	SEISMIC JOINT MODIFICATIONS HINGE A	CR	MN	25

REVISIONS

DESIGN	BY C. Redfield	CHECKED M. Nader	
DETAILS	BY H. Patel	CHECKED M. Benoit	
QUANTITIES	BY H. Patel	CHECKED J. Duxbury	

PREPARED FOR THE STATE OF CALIFORNIA DEPARTMENT OF TRANSPORTATION

R. Manzanarez
PROJECT ENGINEER

BRIDGE NO. 34-0006L/R
KILOMETER POST 13.2/13.9

SAN FRANCISCO OAKLAND BAY BRIDGE
EAST SPAN SEISMIC SAFETY PROJECT
SELF-ANCHORED SUSPENSION BRIDGE
(SUPERSTRUCTURE & TOWER)

HINGE A EXPANSION JOINT DETAILS NO. 5

SHEET 447S3R1 OF

Rev. Date: 5-18-98

ORIGINAL SCALE IN MILLIMETERS FOR REDUCED PLANS 0 10 20 30 40 50 60 70 80 90 100

CU 04
EA 0120F1

DISREGARD PRINTS BEARING EARLIER REVISION DATES 01/30/10

REVISION DATES (PRELIMINARY STAGE ONLY)

FILE => I:\bb\04-012001\sos\contract plans and cco\cco\cco#25\7-revision 12-30-10\dgn\ak_jnt01c.dgn

USERNAME => DWTMROW DATE PLOTTED => 30 DEC 2010 TIME PLOTTED => 13:21:49

100 % PS&E

DIST	COUNTY	ROUTE	KILOMETER POST TOTAL PROJECT	SHEET No	TOTAL SHEETS
04	SF	80	13.2/13.9	864S4R1	1204

REGISTERED CIVIL ENGINEER DATE

07-30-10

PLANS APPROVAL DATE

REGISTERED PROFESSIONAL ENGINEER Enrico C. Maggenti No. 46920 Exp. 6/30/11 CIVIL STATE OF CALIFORNIA

The State of California or its officers or agents shall not be responsible for the accuracy or completeness of electronic copies of this plan sheet.

Caltrans now has a web site! To get to the web site, go to: http://www.dot.ca.gov

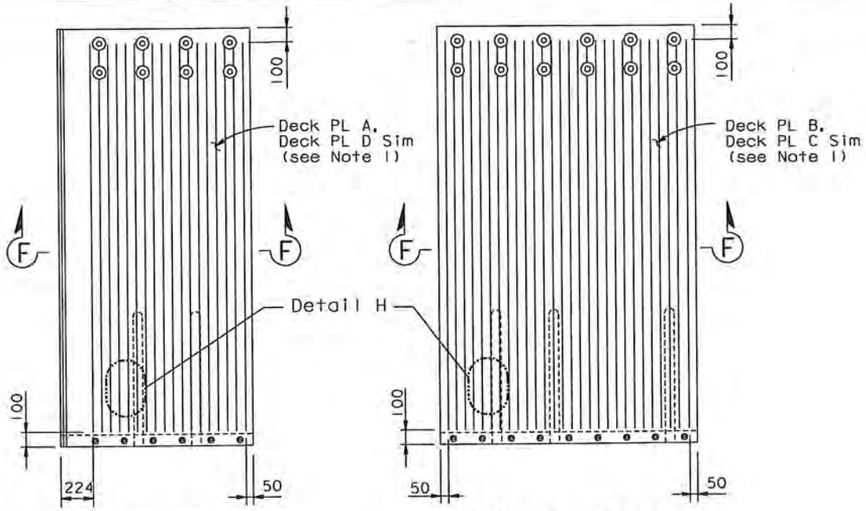

DECK PLATE A/D

(Deck PL A Shown, Deck PL D Similar)

DECK PLATE B/C

(Deck PL B Shown, Deck PL C Similar)

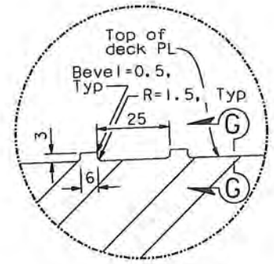

DETAIL G

1:1

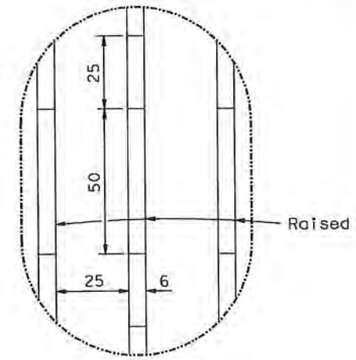

DETAIL H

1:1

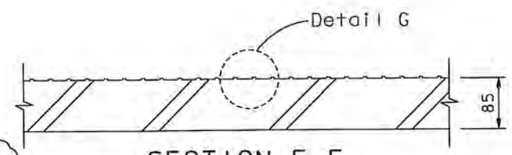

SECTION F-F

1:5

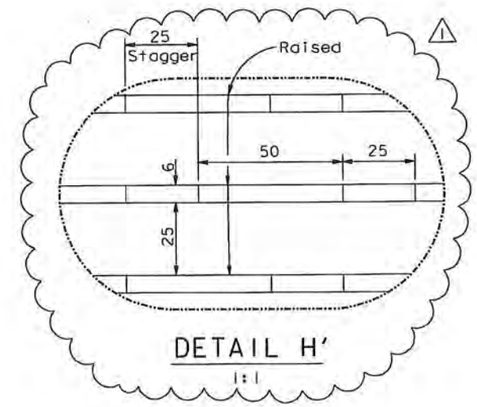

DETAIL H'

1:1

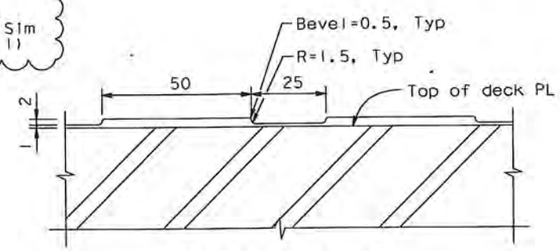

SECTION G-G

1:1

FRICTION PATTERN (See Note 2)

1:20

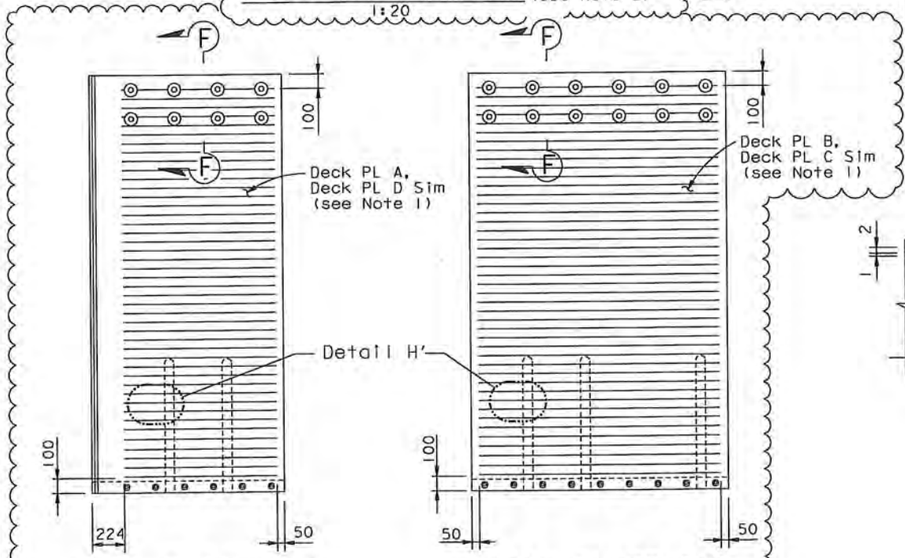

DECK PLATE A/D

(Deck PL A Shown, Deck PL D Similar)

DECK PLATE B/C

(Deck PL B Shown, Deck PL C Similar)

ALT FRICTION PATTERN (See Note 2)

1:20

NOTES:

1. For Details not shown, see "Hinge A Expansion Joint Details No.5" sheet.
2. Friction pattern type shall be selected as directed by the Engineer. Polymer/Aggregate Skid Coat (PASC) may be applied per Engineer's direction.

CONTRACT CHANGE ORDER NO. 2550
SHEET 21 OF 36

REQUESTS FOR INFORMATION NOT ADDRESSED IN THIS CCO REMAIN IN FORCE

MARK	DATE	DESCRIPTIONS	BY	CH'D	CCO#
1	12/30/10	SEISMIC JOINT MODIFICATIONS HINGE A	RM	AA	25
0	07/30/10	SEISMIC JOINT MODIFICATIONS HINGE A	RM	AA	25

REVISIONS

	BY	CHECKED
DESIGN	R MAGGENTI	A AKINSANYA
DETAILS	R MAGGENTI	A AKINSANYA
QUANTITIES	R MAGGENTI	A AKINSANYA

STATE OF CALIFORNIA
DEPARTMENT OF TRANSPORTATION

DIVISION OF ENGINEERING SERVICES
STRUCTURE DESIGN
SPECIAL DESIGNS BRANCH

BRIDGE NO. 34-0006 L/R
KILOMETER POST 13.2/13.9

SAN FRANCISCO OAKLAND BAY BRIDGE
EAST SPAN SEISMIC SAFETY PROJECT

SELF-ANCHORED SUSPENSION BRIDGE
(SUPERSTRUCTURE & TOWER)

SEISMIC JOINT (HINGE A)

HINGE A EXPANSION JOINT DETAILS NO. 6

Caltrans Metric

ALL DIMENSIONS ARE IN MILLIMETERS UNLESS OTHERWISE SHOWN

ORIGINAL SCALE IN MILLIMETERS FOR REDUCED PLANS 0 10 20 30 40 50 60 70 80 90 100

CU 04
EA 0120F1

DISREGARD PRINTS BEARING EARLIER REVISION DATES 07/30/10

REVISION DATES

SHEET 447S4R1 OF

FILE => spec_des_br_proj/04-0120F1/1:\bb\04-0120F1\sas\contract plans and cco\cco\cco#25\7-revision 12-30-10\dgn\akjnt01d.dgn

USERNAME => DMTHROW DATE PLOTTED => 30 DEC 2010 TIME PLOTTED => 13:23:03

DIST.	COUNTY	ROUTE	KILOMETER POST TOTAL PROJECT	SHEET NO.	TOTAL SHEETS
04	SF	80	13.2/13.9	864S5R1	1204

REGISTERED ENGINEER - CIVIL

07-30-10

PLANS APPROVAL DATE

The State of California or its officers or agents shall not be responsible for the accuracy or completeness of electronic copies of this plan sheet.

REGISTERED PROFESSIONAL ENGINEER Marwan N. Nader No. C 054426 Exp. 12/31/11 CIVIL STATE OF CALIFORNIA

T.Y. LIN / MOFFATT & NICHOL
825 BATTERY STREET
SAN FRANCISCO, CA 94111

Caltrans now has a web site! To get to the web site, go to: http://www.dot.ca.gov

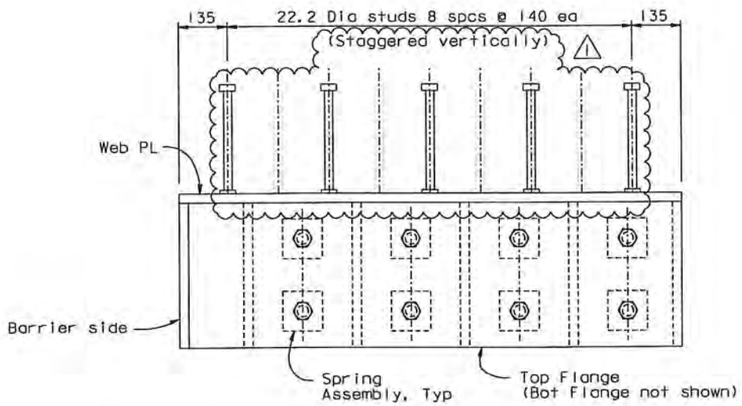

PLAN - BUILT UP CHANNEL ASSEMBLY "A"
NTS

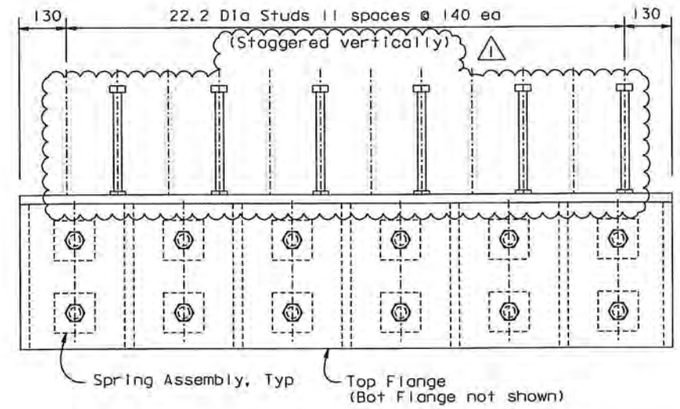

PLAN - BUILT UP CHANNEL ASSEMBLY "B"
NTS

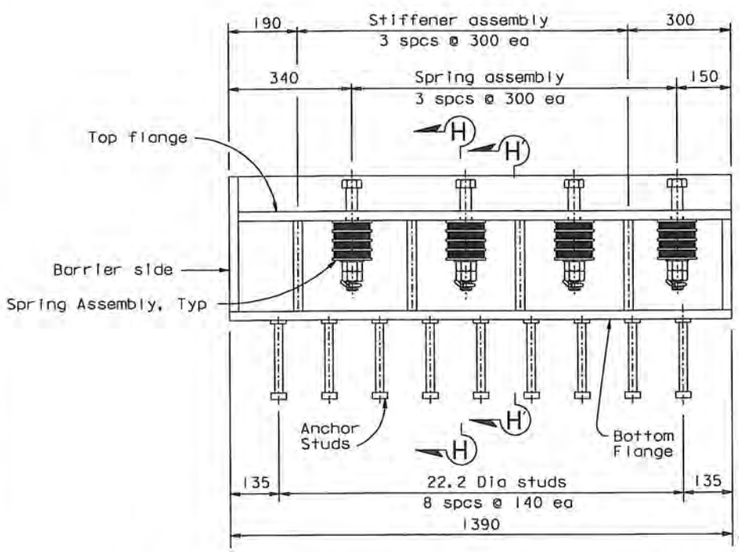

ELEVATION - BUILT UP CHANNEL ASSEMBLY "A"
NTS

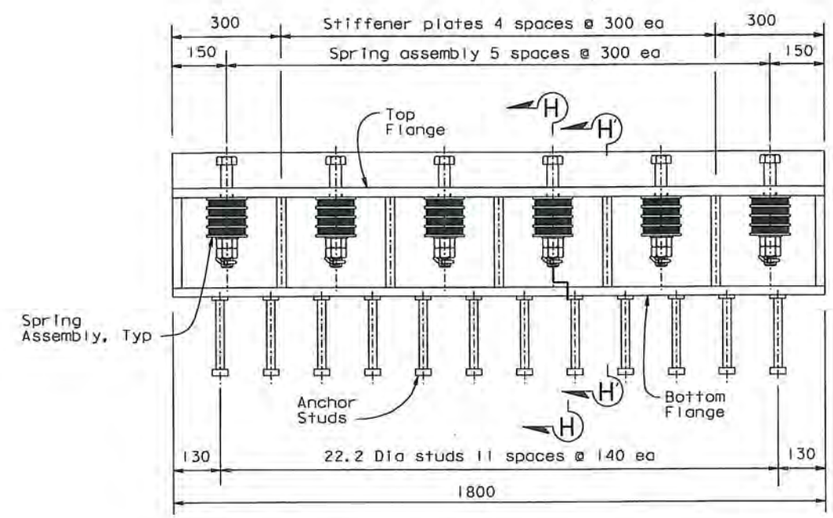

ELEVATION - BUILT UP CHANNEL ASSEMBLY "B"
NTS

NOTES:

1. For Sections H-H and H'-H', see "Hinge A Expansion Joint Details No.8" sheet.

CONTRACT CHANGE ORDER NO. 2550
SHEET 22 OF 36

REQUESTS FOR INFORMATION NOT ADDRESSED IN THIS CCO REMAIN IN FORCE

ALL DIMENSIONS ARE IN MILLIMETERS UNLESS OTHERWISE SHOWN

MARK	DATE	DESCRIPTIONS	BY	CH'D	CCO#
1	12/30/10	SEISMIC JOINT MODIFICATIONS HINGE A	CR	MN	25
0	07/30/10	SEISMIC JOINT MODIFICATIONS HINGE A	CR	MN	25

REVISIONS

R. Vallizadeh/V. Toan/Y.L./W.L./F.C.
DESIGN OVERSIGHT
Ryan Vallizadeh / Vong Toan / Y. Liu
SIGN OFF DATE 12/30/10

DESIGN	BY C. Redfield	CHECKED	M. Nader
DETAILS	BY H. Patel	CHECKED	M. Benoit
QUANTITIES	BY H. Patel	CHECKED	J. Duxbury

PREPARED FOR THE STATE OF CALIFORNIA DEPARTMENT OF TRANSPORTATION

R. Manzanarez
PROJECT ENGINEER

BRIDGE NO. 34-0006L/R
KILOMETER POST 13.2/13.9

SAN FRANCISCO OAKLAND BAY BRIDGE
EAST SPAN SEISMIC SAFETY PROJECT
SELF-ANCHORED SUSPENSION BRIDGE
(SUPERSTRUCTURE & TOWER)

HINGE A EXPANSION JOINT DETAILS NO. 7

Rev. Date: 5-18-98

ORIGINAL SCALE IN MILLIMETERS FOR REDUCED PLANS 0 10 20 30 40 50 60 70 80 90 100

CU 04
EA 0120F1

DISREGARD PRINTS BEARING EARLIER REVISION DATES → 01/30/10

REVISION DATES (PRELIMINARY STAGE ONLY)

SHEET 447S5R1 OF

FILE => I:\bb\04-01200I\sas\contract plans and cco\cco\cco#25\7-revision 12-30-10\dgn\akjnt01e.dgn

100 % PS&E

USERNAME => DWinrow DATE PLOTTED => 30 DEC 2010 TIME PLOTTED => 13:23:39

DIST.	COUNTY	ROUTE	KILOMETER POST TOTAL PROJECT	SHEET NO.	TOTAL SHEETS
04	SF	80	13.2/13.9	B64S6R2	1204

REGISTERED ENGINEER - CIVIL

07-30-10

PLANS APPROVAL DATE

REGISTERED PROFESSIONAL ENGINEER Marwan N. Nader No. C 054426 Exp. 12/31/11 CIVIL STATE OF CALIFORNIA

The State of California or its officers or agents shall not be responsible for the accuracy or completeness of electronic copies of this plan sheet.

T.Y. LIN / MOFFATT & NICHOL
825 BATTERY STREET
SAN FRANCISCO, CA 94111

Caltrans now has a web site! To get to the web site, go to: http://www.dot.ca.gov

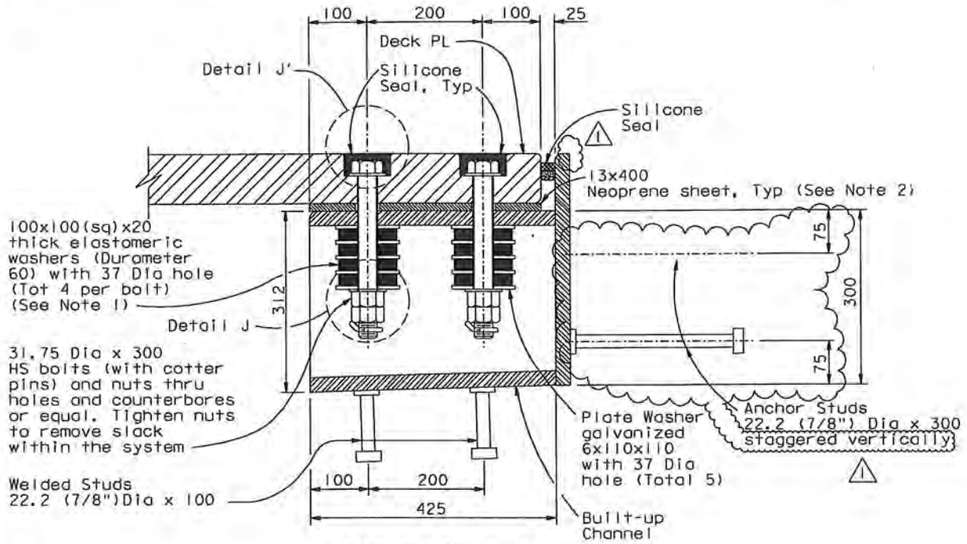

SECTION H-H
NTS

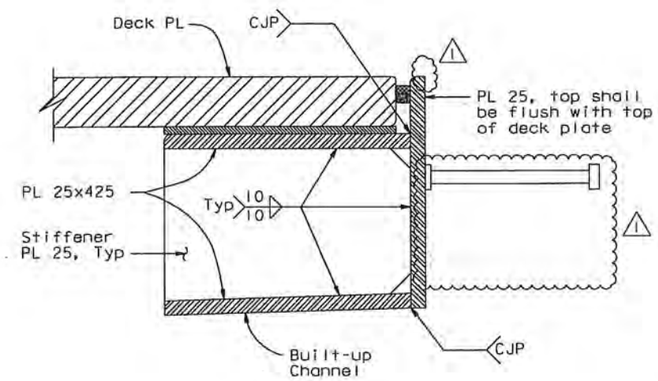

SECTION H'-H'
NTS

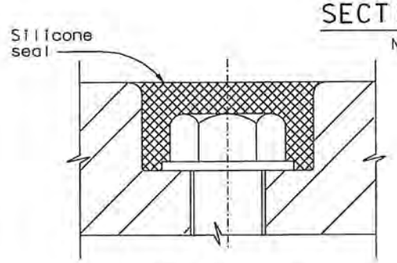

DETAIL J'
NTS

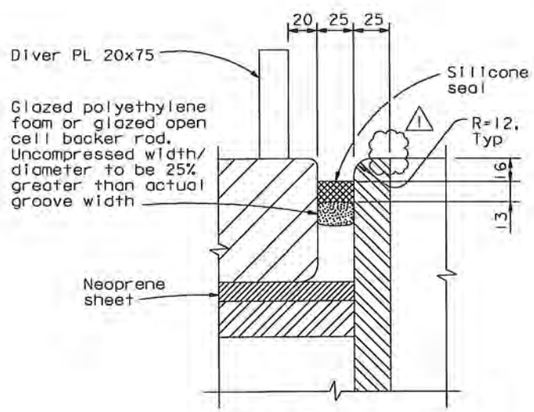

SECTION M-M
NTS

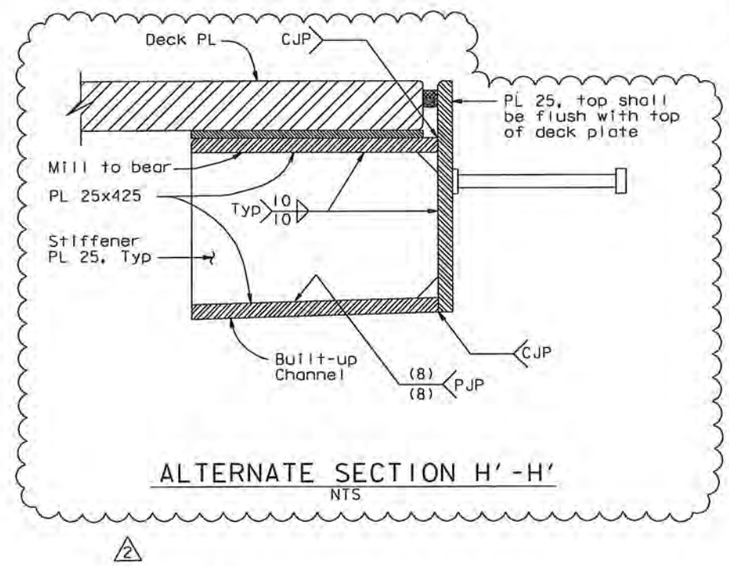

ALTERNATE SECTION H'-H'
NTS

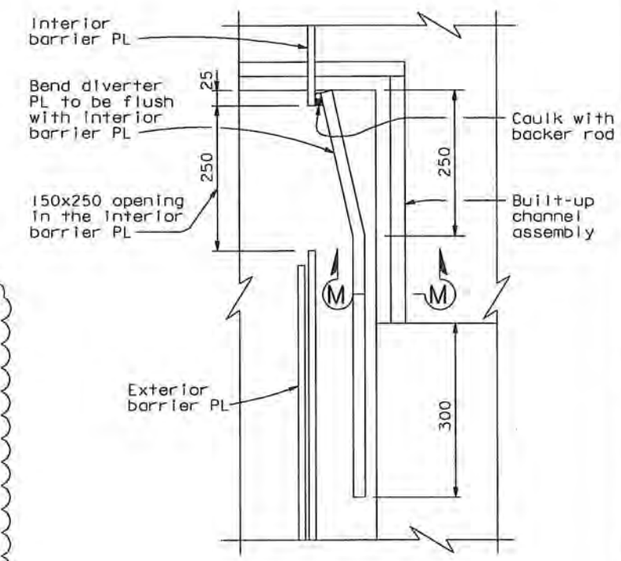

DETAIL L
1:5

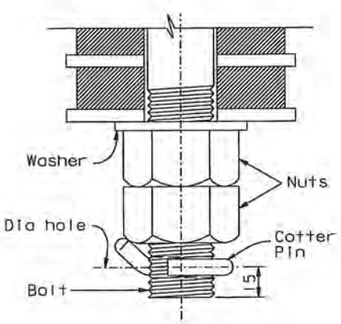

DETAIL J
NTS

NOTES:

1. Elastomeric washers shall be plain neoprene.
2. The length of the 13x400 mm neoprene sheet below the deck plate is 1365 mm and 1800 mm long for modules "A" and "B" respectively.

CONTRACT CHANGE ORDER NO. 25 SO
SHEET 23 OF 36

REQUESTS FOR INFORMATION NOT ADDRESSED IN THIS CCO REMAIN IN FORCE

MARK	DATE	DESCRIPTIONS	BY	CH'D	CCO#
2	08/05/11	SEISMIC JOINT MODIFICATIONS HINGE A	CR	MN	25
1	12/30/10	SEISMIC JOINT MODIFICATIONS HINGE A	CR	MN	25
0	07/30/10	SEISMIC JOINT MODIFICATIONS HINGE A	CR	MN	25

REVISIONS

R. Vaziadeh/V. Toan/Y.L./W.L./F.C.
DESIGN OVERSIGHT
SIGN OFF DATE 08/09/11

DESIGN	BY C. Redfield	CHECKED M. Nader	
DETAILS	BY H. Patel	CHECKED M. Benoit	
QUANTITIES	BY H. Patel	CHECKED J. Duxbury	

PREPARED FOR THE STATE OF CALIFORNIA DEPARTMENT OF TRANSPORTATION

ALL DIMENSIONS ARE IN MILLIMETERS UNLESS OTHERWISE SHOWN

R. Manzanarez
PROJECT ENGINEER

BRIDGE NO. 34-0006L/R
KILOMETER POST 13.2/13.9

CU 04
EA 0120F1

DISREGARD PRINTS BEARING EARLIER REVISION DATES 07/30/10

SAN FRANCISCO OAKLAND BAY BRIDGE
EAST SPAN SEISMIC SAFETY PROJECT
SELF-ANCHORED SUSPENSION BRIDGE
(SUPERSTRUCTURE & TOWER)

HINGE A EXPANSION JOINT DETAILS NO. 8

SHEET 447S6R2 OF

Rev. Date: 5-18-98

ORIGINAL SCALE IN MILLIMETERS FOR REDUCED PLANS 0 10 20 30 40 50 60 70 80 90 100

FILE => I:\bb\04-012001\sas\contract plans and cco\cco\cco#25\9-revision 08-05-11\dgn\akjnt01f.dgn

100 % PS&E

USERNAME => DWinrow DATE PLOTTED => 05 AUG 2011 TIME PLOTTED => 15:13:21

DIST.	COUNTY	ROUTE	KILOMETER POST TOTAL PROJECT	SHEET NO.	TOTAL SHEETS
04	SF	80	13.2/13.9	864S7R1	1204

REGISTERED ENGINEER - CIVIL

07-30-10

PLANS APPROVAL DATE

The State of California or its officers or agents shall not be responsible for the accuracy or completeness of electronic copies of this plan sheet.

REGISTERED PROFESSIONAL ENGINEER Marwan N. Nader No. C 054426 Exp. 12/31/11 CIVIL STATE OF CALIFORNIA

T.Y. LIN / MOFFATT & NICHOL
825 BATTERY STREET
SAN FRANCISCO, CA 94111

Caltrans now has a web site! To get to the web site, go to: http://www.dot.ca.gov

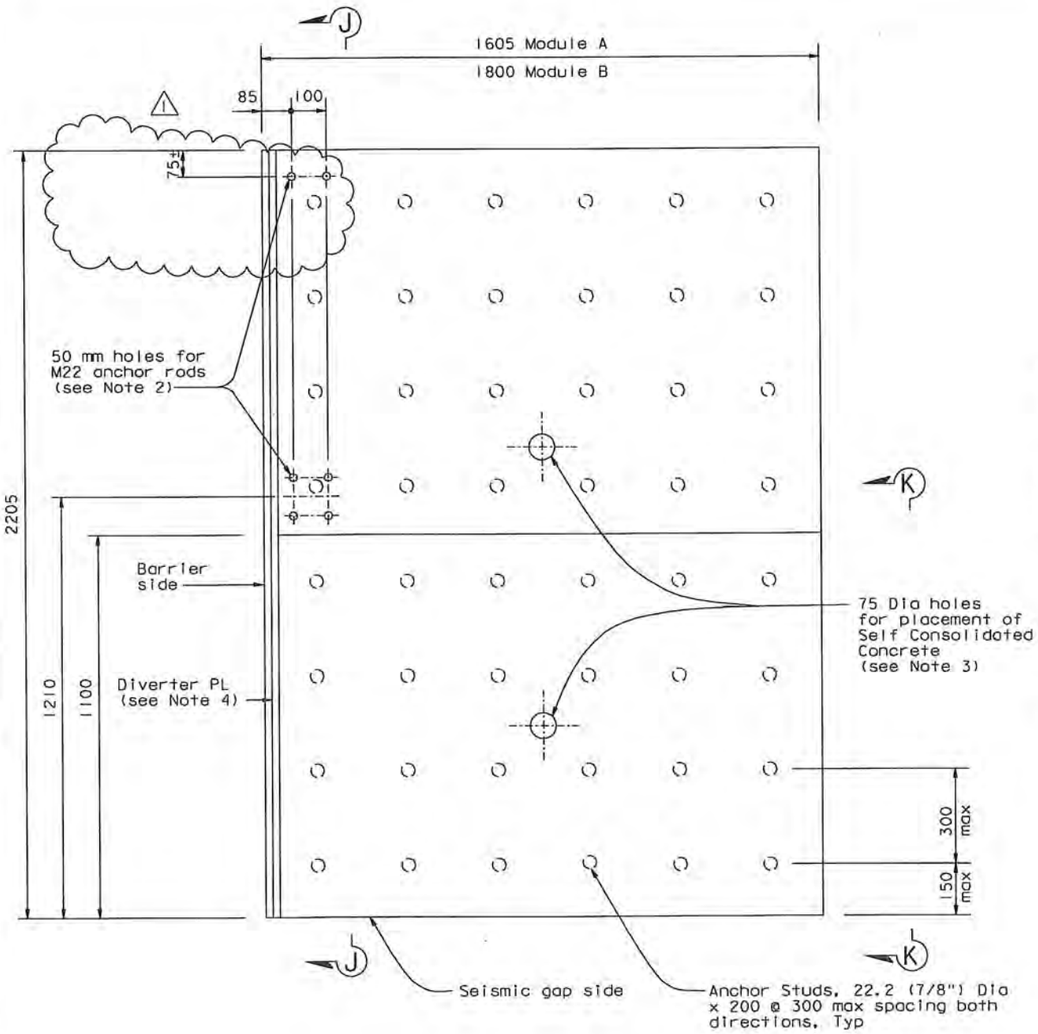

PLAN-SUPPORT PLATE
NTS

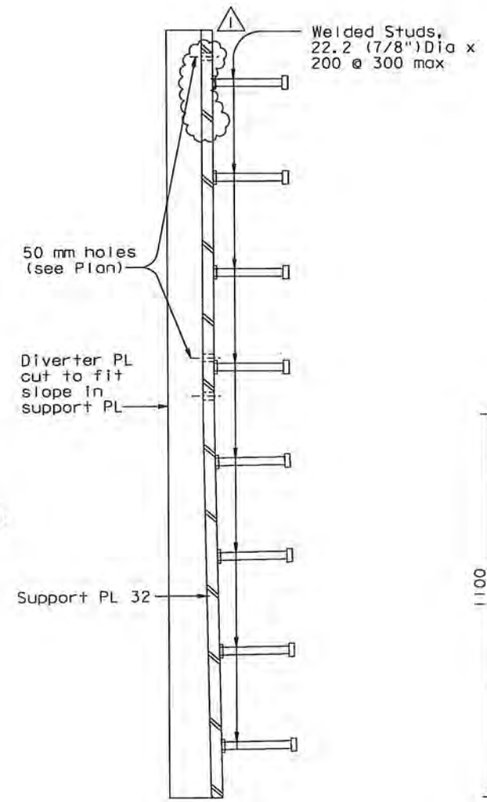

SECTION J-J
NTS

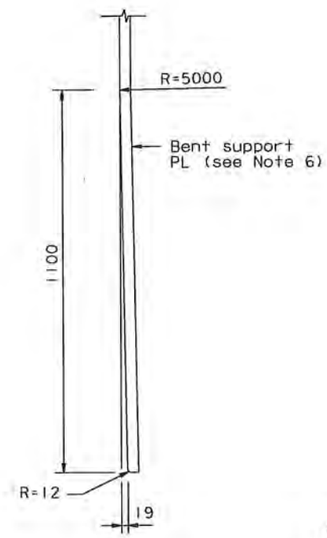

SECTION K-K
NTS

NOTES:

1. Support Plate A shown. Support Plate B similar.
2. Install anchor rod holes in support plate Module A at barrier side only as indicated. Coordinate anchor rod holes to align with those in the barrier.
3. Exact location of 75 Dia holes to be determined prior to support plate fabrication.
4. For diverter plate details see "Hinge A Expansion Joint Details No. 5" sheet. Diverter plate applies only to support PL A.
5. Anchor holes for Trelleborg Transflex 2400 and Trelleborg Support Bar connection not shown. Coordinate anchor hole location with Transflex modules.
6. At the Contractor's option, the support plate may be machined in lieu of bending.

100 % PS&E

CONTRACT CHANGE ORDER NO. 2550
SHEET 24 OF 36

REQUESTS FOR INFORMATION NOT ADDRESSED IN THIS CCO REMAIN IN FORCE

ALL DIMENSIONS ARE IN MILLIMETERS UNLESS OTHERWISE SHOWN

R. Vallizadeh/V. Toon/Y. L./W. L./F. C.
DESIGN OVERSIGHT
SIGN OFF DATE 10/22/10

MARK	DATE	DESCRIPTIONS	BY	CH'D	CCO#
1	10/22/10	SEISMIC JOINT MODIFICATIONS HINGE A	CR	MN	25
0	07/30/10	SEISMIC JOINT MODIFICATIONS HINGE A	CR	MN	25

REVISIONS

Rev. Date: 5-18-98

DESIGN	BY C. Redfield	CHECKED M. Nader	
DETAILS	BY H. Patel	CHECKED M. Benoit	
QUANTITIES	BY H. Patel	CHECKED J. Duxbury	

ORIGINAL SCALE IN MILLIMETERS FOR REDUCED PLANS 0 10 20 30 40 50 60 70 80 90 100

PREPARED FOR THE STATE OF CALIFORNIA DEPARTMENT OF TRANSPORTATION

R. Manzanarez
PROJECT ENGINEER

BRIDGE NO. 34-0006L/R
KILOMETER POST 13.2/13.9

CU 04
EA 0120F1

DISREGARD PRINTS BEARING EARLIER REVISION DATES → 07/30/10

SAN FRANCISCO OAKLAND BAY BRIDGE
EAST SPAN SEISMIC SAFETY PROJECT
SELF-ANCHORED SUSPENSION BRIDGE
(SUPERSTRUCTURE & TOWER)

HINGE A EXPANSION JOINT DETAILS NO. 9

REVISION DATES (PRELIMINARY STAGE ONLY)

SHEET 447S7R1 OF

FILE => I:\bb\04-012001\sas\contract plans and cco\cco\cco#25\6-revision 10-22-10\dgn\akjnt01g.dgn

USERNAME => crivera DATE PLOTTED => 22 OCT 2010 TIME PLOTTED => 13:44:05

DIST.	COUNTY	ROUTE	KILOMETER POST TOTAL PROJECT	SHEET NO.	TOTAL SHEETS
04	SF	80	13.2/13.9	864S8R1	1204

REGISTERED ENGINEER - CIVIL

07-30-10
PLANS APPROVAL DATE

REGISTERED PROFESSIONAL ENGINEER Marwan N. Nader No. C 054426 Exp. 12/31/11 CIVIL STATE OF CALIFORNIA

The State of California or its officers or agents shall not be responsible for the accuracy or completeness of electronic copies of this plan sheet.

T.Y. LIN / MOFFATT & NICHOL
825 BATTERY STREET
SAN FRANCISCO, CA 94111

Caltrans now has a web site! To get to the web site, go to: http://www.dot.ca.gov

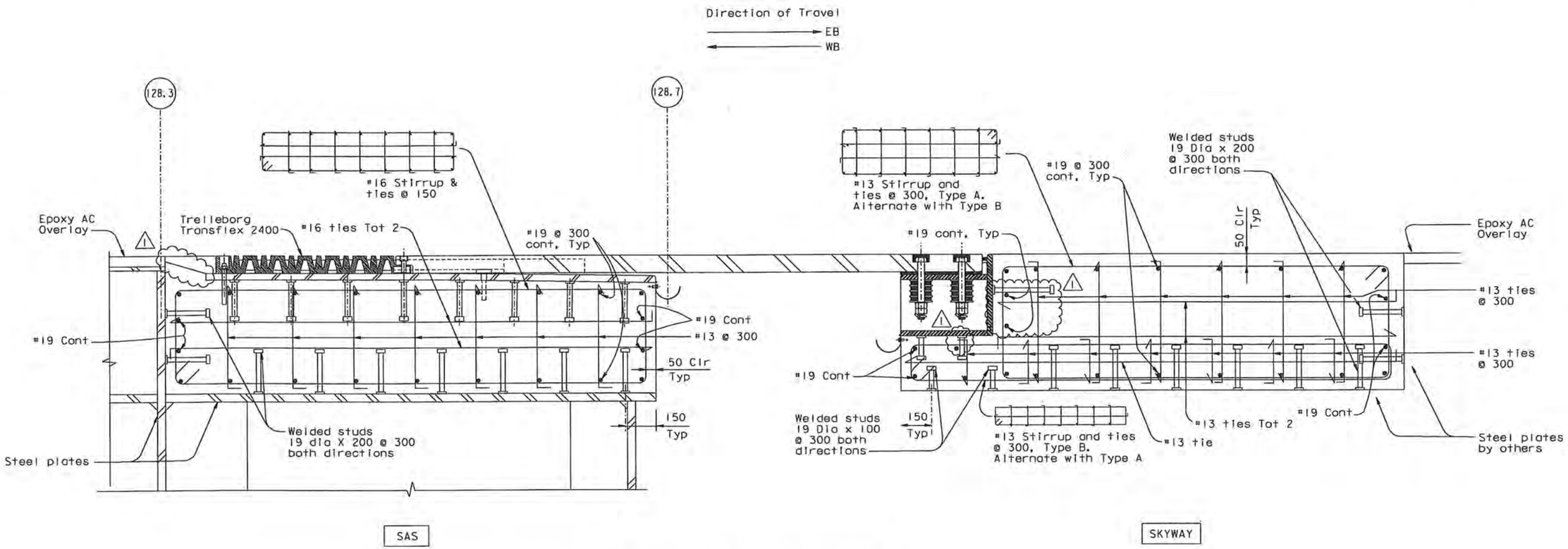

BLOCK OUT REINFORCEMENT DETAIL

1:10

CONTRACT CHANGE ORDER NO. 25 50
SHEET 25 OF 36

REQUESTS FOR INFORMATION NOT ADDRESSED IN THIS CCO REMAIN IN FORCE

R. Valizadeh/V. Toan/Y.L./W.L./F.C.
DESIGN OVERSIGHT
SIGN OFF DATE 01/04/11

MARK	DATE	DESCRIPTIONS	BY	CH'D	CCO#
1	01/04/11	SEISMIC JOINT MODIFICATIONS HINGE A	CR	MN	25
0	07/30/10	SEISMIC JOINT MODIFICATIONS HINGE A	CR	MN	25

REVISIONS

DESIGN	BY C. Redfield	CHECKED M. Nader	
DETAILS	BY H. Patel	CHECKED M. Benolt	
QUANTITIES	BY H. Patel	CHECKED J. Duxbury	

PREPARED FOR THE STATE OF CALIFORNIA DEPARTMENT OF TRANSPORTATION

R. Manzanarez
PROJECT ENGINEER

ALL DIMENSIONS ARE IN MILLIMETERS UNLESS OTHERWISE SHOWN

BRIDGE NO. 34-0006L/R
KILOMETER POST 13.2/13.9

SAN FRANCISCO OAKLAND BAY BRIDGE
EAST SPAN SEISMIC SAFETY PROJECT
SELF-ANCHORED SUSPENSION BRIDGE
(SUPERSTRUCTURE & TOWER)

HINGE A EXPANSION JOINT DETAILS NO. 10

Rev. Date: 5-18-98

ORIGINAL SCALE IN MILLIMETERS FOR REDUCED PLANS 0 10 20 30 40 50 60 70 80 90 100

CU 04
EA 0120F1

DISREGARD PRINTS BEARING EARLIER REVISION DATES 01/30/10

REVISION DATES (PRELIMINARY STAGE ONLY)

SHEET 447S8R1 OF

FILE => L:\BB\04-012001\SAS\Contract Plans and CCO\CCO\CCO#25\8-Update 01-04-11\DGN\ak]nt01h.dgn

100 % PS&E

USERNAME => arivera DATE PLOTTED => 04 JAN 2011 TIME PLOTTED => 11:57:03

DIST.	COUNTY	ROUTE	KILOMETER POST TOTAL PROJECT	SHEET NO.	TOTAL SHEETS
04	SF	80	13.2/13.9	864S9	1204

REGISTERED ENGINEER - CIVIL

10-22-10
PLANS APPROVAL DATE

REGISTERED PROFESSIONAL ENGINEER Marwan N. Nader No. C 054426 Exp. 12/31/11 CIVIL STATE OF CALIFORNIA

The State of California or its officers or agents shall not be responsible for the accuracy or completeness of electronic copies of this plan sheet.

T.Y. LIN / MOFFATT & NICHOL
825 BATTERY STREET
SAN FRANCISCO, CA 94111

Caltrans now has a web site! To get to the web site, go to: http://www.dot.ca.gov

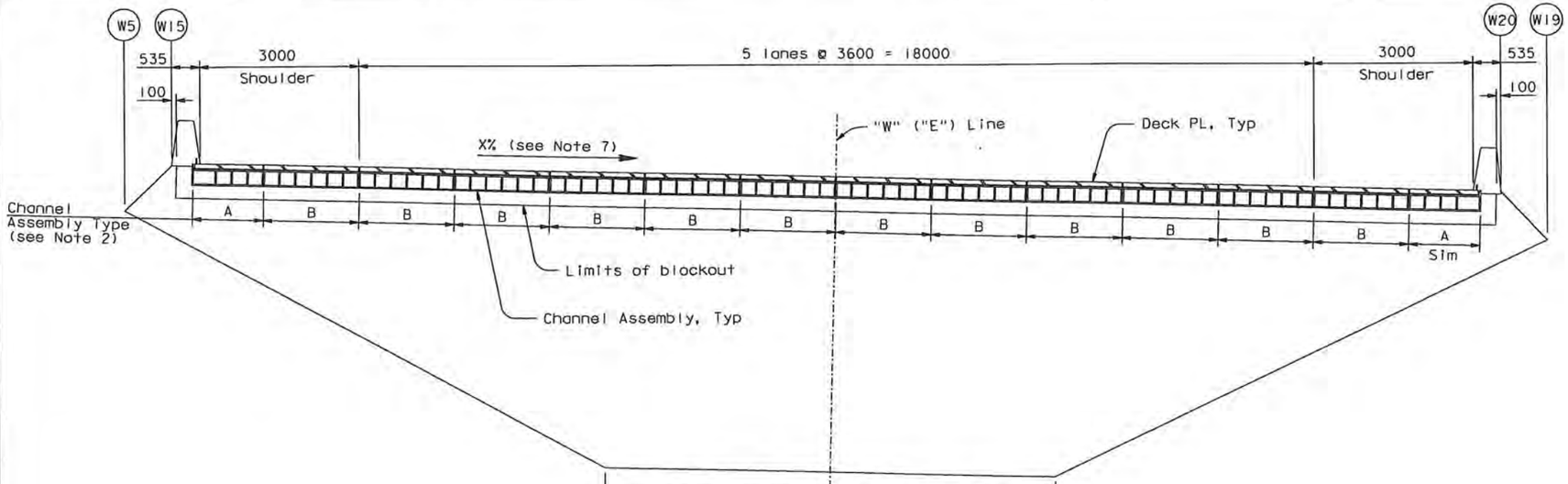

ALTERNATIVE ELEVATION

1:50
(Westbound Shown, Eastbound Similar)
(Elevation View Looking East)

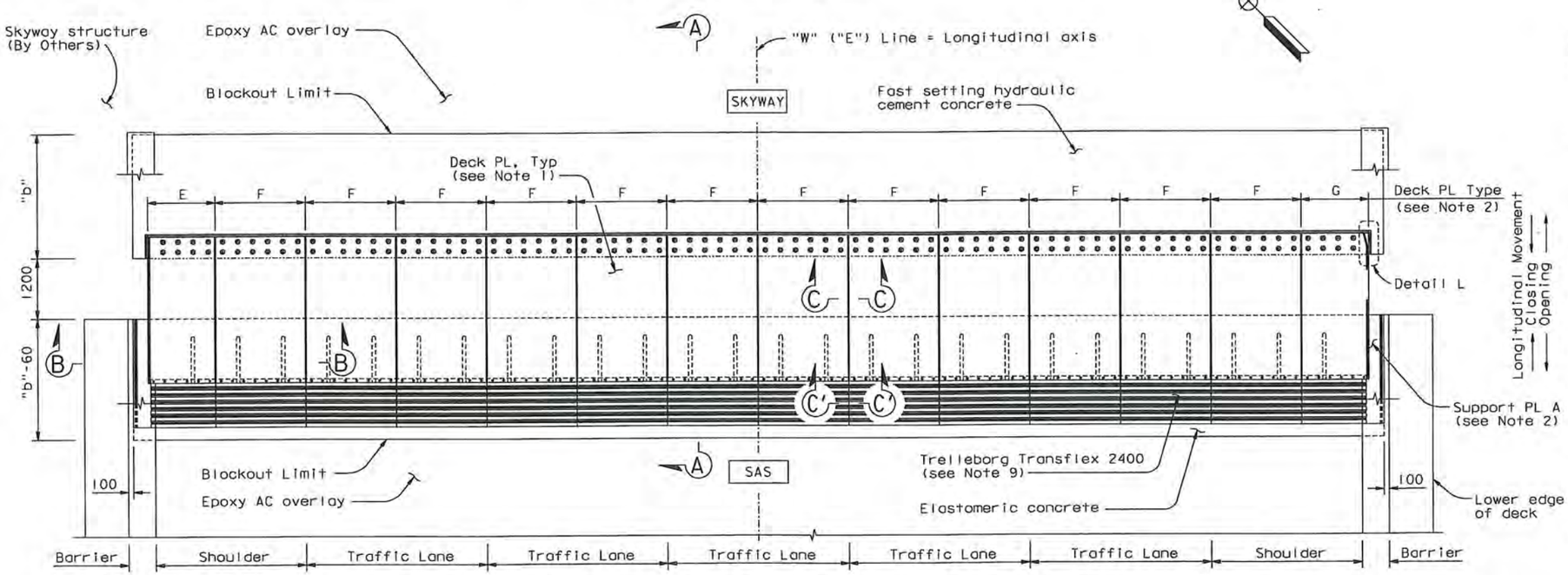

CONTRACT CHANGE ORDER NO. 2550
SHEET 26 OF 36

ALTERNATIVE PLAN-EXPANSION JOINT

1:50
(Westbound Shown, Eastbound Similar)

REQUESTS FOR INFORMATION NOT ADDRESSED IN THIS CCO REMAIN IN FORCE

NOTES:

1. For Deck Plates E, F and G, see "Hinge A Expansion Joint Details No. 12" sheet. For Deck Plate friction groove pattern, see "Hinge A Expansion Joint Details No. 13" sheet.
2. Deck Plate E and G matches with Support Plate A and the Channel Assembly A (Module A). Deck Plate F matches with Support Plate B and the Channel Assembly B (Module B). For details, see "Hinge A Expansion Joint Details No. 5", "Hinge A Expansion Joint Details No. 7" and "Hinge A Expansion Joint Details No. 12" sheets.
3. One module "B" is placed per half traffic lane.
4. Portions of barriers are not shown for clarity. For barrier details at expansion joint, see "Barrier Details" sheets.
5. For Section A-A & related notes, see "Hinge A Expansion Joint Details No. 4" sheet.
6. For Section B-B, Section C-C & Section C'-C', see "Hinge A Expansion Joint Details No. 5" sheet.
7. For cross slope, see "Barrier Details No. 5" sheet.
8. For Detail L, see "Hinge A Expansion Joint Details No. 8" sheet.
9. The expansion joint shall be 1800 wide Transflex 2400 module with movement rating of 600. The joint between the Transflex modules shall be water tight.
10. For general notes, see "General Notes" sheets.

ALL DIMENSIONS ARE IN MILLIMETERS UNLESS OTHERWISE SHOWN

R. Vaziadeh/V. Toan/Y. L./W. L./F. C.
DESIGN OVERSIGHT
SIGN OFF DATE 10/22/10

MARK	DATE	DESCRIPTIONS	BY	CH'D	CCO#
6	10/22/10	SEISMIC JOINT MODIFICATIONS HINGE A	CR	MN	25

REVISIONS

DESIGN	BY	C. Redfield	CHECKED	M. Nader
DETAILS	BY	H. Patel	CHECKED	M. Benolt
QUANTITIES	BY	H. Patel	CHECKED	J. Duxbury

PREPARED FOR THE STATE OF CALIFORNIA DEPARTMENT OF TRANSPORTATION

R. Manzanarez
PROJECT ENGINEER

BRIDGE NO. 34-0006L/R
KILOMETER POST 13.2/13.9

SAN FRANCISCO OAKLAND BAY BRIDGE
EAST SPAN SEISMIC SAFETY PROJECT
SELF-ANCHORED SUSPENSION BRIDGE
(SUPERSTRUCTURE & TOWER)

HINGE A EXPANSION JOINT DETAILS NO. 11

Rev. Date: 5-18-98

ORIGINAL SCALE IN MILLIMETERS FOR REDUCED PLANS 0 10 20 30 40 50 60 70 80 90 100

CU 04
EA 0120F1

DISREGARD PRINTS BEARING EARLIER REVISION DATES 10/22/10

REVISION DATES (PRELIMINARY STAGE ONLY)

SHEET 447S9 OF

FILE => I:\bb\04-0120F1\sas\contract plans and cco\cco\cco#25\6-revision 10-22-10\dgn\akjnt01j.dgn

USERNAME => arivera DATE PLOTTED => 22 OCT 2010 TIME PLOTTED => 13:46:16

100 % PS&E

DIST.	COUNTY	ROUTE	KILOMETER POST TOTAL PROJECT	SHEET NO.	TOTAL SHEETS
04	SF	80	13.2/13.9	864S10	1204

Caltrans Metric

REGISTERED ENGINEER - CIVIL

10-22-10

PLANS APPROVAL DATE

The State of California or its officers or agents shall not be responsible for the accuracy or completeness of electronic copies of this plan sheet.

REGISTERED PROFESSIONAL ENGINEER Marwan N. Nader No. C 054426 Exp. 12/31/11 CIVIL STATE OF CALIFORNIA

T.Y. LIN / MOFFATT & NICHOL
825 BATTERY STREET
SAN FRANCISCO, CA 94111

Caltrans now has a web site! To get to the web site, go to: http://www.dot.ca.gov

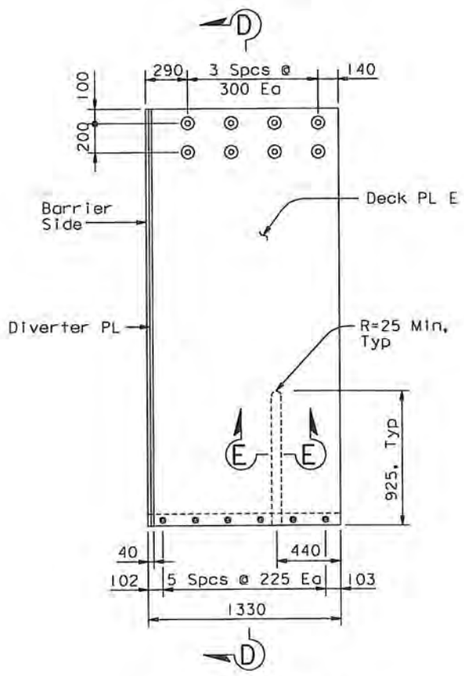

DECK PLATE E
1:20

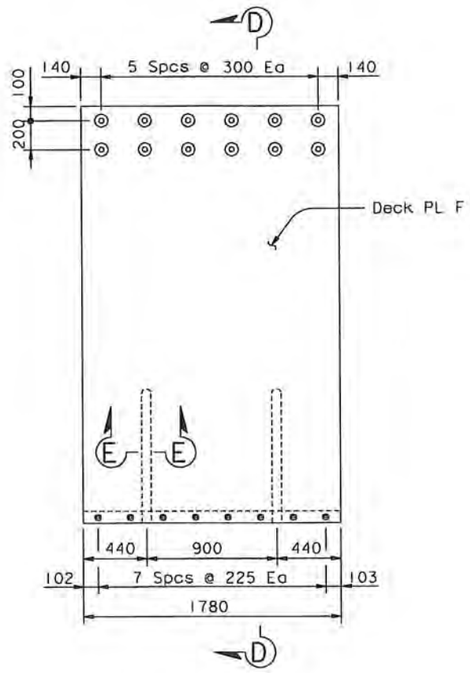

DECK PLATE F
1:20

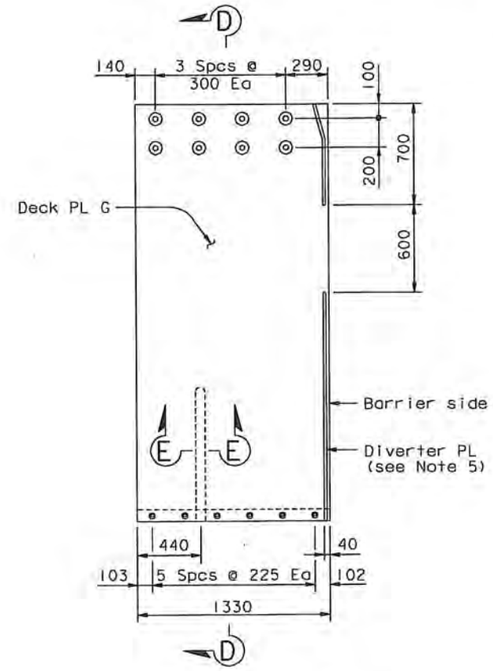

DECK PLATE G
1:20

NOTES:

1. For deck plate alternative plan see "Hinge A Expansion Joint Details No. 11" sheet.
2. Diverter plate applies to Deck plates E and G only.
3. For bolting of deck plates to channel assembly details, see "Hinge A Expansion Joint Details No. 8" sheet.
4. For connection detail between Trelleborg Transflex 2400 and deck plate see, "Hinge A Expansion Joint Details No. 4" sheet.
5. For diverter plate detail on Deck PL G, see Detail L on "Hinge A Expansion Joint Details No. 8" sheet.
6. For Section D-D and Section E-E, see "Hinge A Expansion Joint Details No. 5" sheet.

CONTRACT CHANGE ORDER NO. 2550
SHEET 27 OF 36

REQUESTS FOR INFORMATION NOT ADDRESSED IN THIS CCO REMAIN IN FORCE

ALL DIMENSIONS ARE IN MILLIMETERS UNLESS OTHERWISE SHOWN

R. Valizadeh/V. Toan/Y. L./W. L./F. C.
DESIGN OVERSIGHT
Roger Valizadeh / Vong P. Toan / Y. Liu
SIGN OFF DATE 10/22/10

MARK	DATE	DESCRIPTIONS	BY	CH'D	CCO#
0	10/22/10	SEISMIC JOINT MODIFICATIONS HINGE A	CR	MN	25

REVISIONS

DESIGN	BY C. Redfield	CHECKED M. Nader	
DETAILS	BY H. Patel	CHECKED M. Benoit	
QUANTITIES	BY H. Patel	CHECKED J. Duxbury	

PREPARED FOR THE STATE OF CALIFORNIA DEPARTMENT OF TRANSPORTATION

R. Manzanarez
PROJECT ENGINEER

BRIDGE NO. 34-0006L/R
KILOMETER POST 13.2/13.9

SAN FRANCISCO OAKLAND BAY BRIDGE
EAST SPAN SEISMIC SAFETY PROJECT
SELF-ANCHORED SUSPENSION BRIDGE
(SUPERSTRUCTURE & TOWER)

HINGE A EXPANSION JOINT DETAILS NO. 12

Rev. Date: 5-18-98

ORIGINAL SCALE IN MILLIMETERS FOR REDUCED PLANS 0 10 20 30 40 50 60 70 80 90 100

CU 04
EA 0120F1

DISREGARD PRINTS BEARING EARLIER REVISION DATES

REVISION DATES (PRELIMINARY STAGE ONLY) 10/22/10

SHEET 447S10 OF

FILE => I:\bb\04-012001\sas\contract plans and cco\cco\cco#25\6-revision 10-22-10\dgn\akjnt01k.dgn

100 % PS&E

USERNAME => arivera DATE PLOTTED => 22 OCT 2010 TIME PLOTTED => 13:47:00

DIST	COUNTY	ROUTE	KILOMETER POST TOTAL PROJECT	SHEET No	TOTAL SHEETS
04	SF	80	13.2/13.9	864511R1	1204

REGISTERED CIVIL ENGINEER DATE

10-22-10
PLANS APPROVAL DATE

REGISTERED PROFESSIONAL ENGINEER Enrico G. Maggenti No. 46920 Exp. 6/30/11 CIVIL STATE OF CALIFORNIA

The State of California or its officers or agents shall not be responsible for the accuracy or completeness of electronic copies of this plan sheet.

Caltrans now has a web site! To get to the web site, go to: http://www.dot.ca.gov

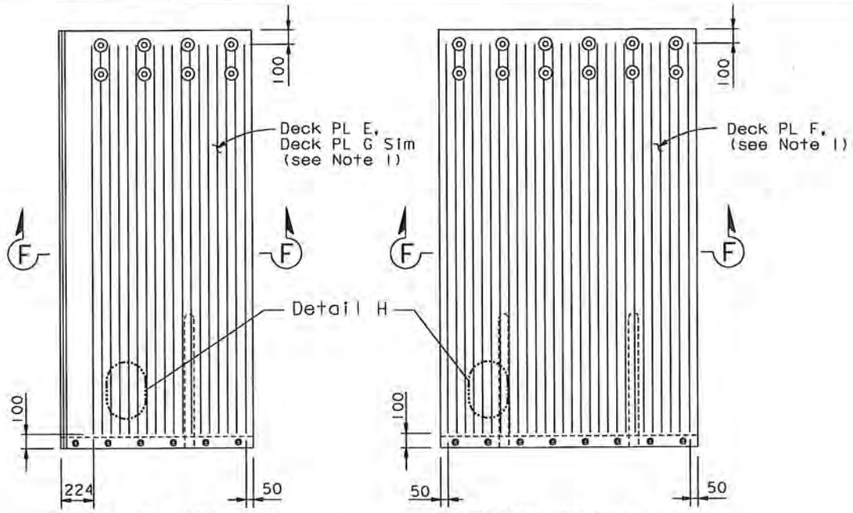

DECK PLATE E/G
(Deck PL E Shown, Deck PL G Similar)

DECK PLATE F

FRICTION PATTERN (See Note 3)
1:20

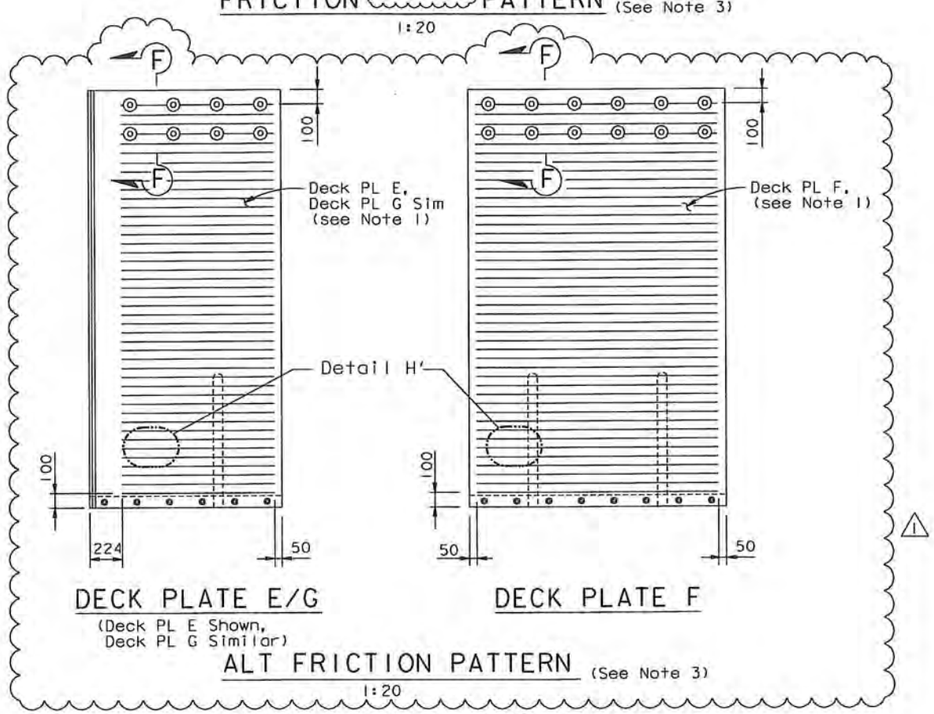

DECK PLATE E/G
(Deck PL E Shown, Deck PL G Similar)

DECK PLATE F

ALT FRICTION PATTERN (See Note 3)
1:20

NOTES:

1. For Details not shown, see "Hinge A Expansion Joint Details No. 12" sheet.
2. For Section F-F, Detail H and Detail H', see "Hinge A Expansion Joint Details No. 6" sheet.
3. Friction pattern type shall be selected as directed by the Engineer. Polymer/Aggregate Skid Coat (PASC) may be applied per Engineer's direction.

CONTRACT CHANGE ORDER NO. 2550
SHEET 28 OF 36

REQUESTS FOR INFORMATION NOT ADDRESSED IN THIS CCO REMAIN IN FORCE

MARK	DATE	DESCRIPTIONS	BY	CH'D	CCO#
1	12/30/10	SEISMIC JOINT MODIFICATIONS HINGE A	RM	AA	25
0	10/22/10	SEISMIC JOINT MODIFICATIONS HINGE A	RM	AA	25

REVISIONS

	BY	CHECKED
DESIGN	R MAGGENTI	A AKINSANYA
DETAILS	R MAGGENTI	A AKINSANYA
QUANTITIES	R MAGGENTI	A AKINSANYA

STATE OF CALIFORNIA
DEPARTMENT OF TRANSPORTATION

DIVISION OF ENGINEERING SERVICES
STRUCTURE DESIGN
SPECIAL DESIGNS BRANCH

BRIDGE NO. 34-0006 L/R
KILOMETER POST 13.2/13.9

SAN FRANCISCO OAKLAND BAY BRIDGE
EAST SPAN SEISMIC SAFETY PROJECT
SELF-ANCHORED SUSPENSION BRIDGE
(SUPERSTRUCTURE & TOWER)

SEISMIC JOINT (HINGE A)
HINGE A EXPANSION JOINT DETAILS NO. 13

ALL DIMENSIONS ARE IN MILLIMETERS UNLESS OTHERWISE SHOWN

ORIGINAL SCALE IN MILLIMETERS FOR REDUCED PLANS 0 10 20 30 40 50 60 70 80 90 100

CU 04
EA 0120F1

DISREGARD PRINTS BEARING EARLIER REVISION DATES 10/22/10

REVISION DATES

SHEET 447 OF 511R1

FILE => spec_des_br_proj/04-0120F1/1:\bb\04-012001\sas\contract plans and cco\cco\cco=25\7-revision 12-30-10\dgn\akjnt011.dgn

USERNAME => DWinrow DATE PLOTTED => 30 DEC 2010 TIME PLOTTED => 13:26:25

DIST	COUNTY	ROUTE	KILOMETER POST TOTAL PROJECT	SHEET No	TOTAL SHEETS
04	SF	80	13.2/13.9	865R5	1204

REGISTERED CIVIL ENGINEER DATE

09-15-2006
PLANS APPROVAL DATE

REGISTERED PROFESSIONAL ENGINEER
EFTHYMIOS DELIS
No. 51434
Exp. 6-30-08
CIVIL
STATE OF CALIFORNIA

The State of California or its officers or agents shall not be responsible for the accuracy or completeness of electronic copies of this plan sheet.

Caltrans now has a web site! To get to the web site, go to: http://www.dot.ca.gov

CONTRACT CHANGE ORDER NO. 2550
SHEET 29 OF 36

REQUESTS FOR INFORMATION NOT ADDRESSED IN THIS CCO REMAIN IN FORCE

MARK	DATE	DESCRIPTIONS	BY	CH'D	CCO#
5	07/30/10	SEISMIC JOINT MODIFICATIONS HINGE A	RM	AA	25
4	10/30/09	SEISMIC JOINT MODIFICATIONS HINGE A	RM	AA	25
3	07/17/08	SEISMIC JOINT MODIFICATIONS HINGE A	TD	AK	25
2	12/18/07	SEISMIC JOINT MODIFICATIONS HINGE A	TD	AK	25
1	09/15/06	JOINT IMPROVEMENTS	TD	AK	25

REVISIONS

	BY	CHECKED
DESIGN	E DELIS	A KARTOUM
DETAILS	A R DUDSAK	A KARTOUM
QUANTITIES	E DELIS	A KARTOUM

REGISTERED PROFESSIONAL ENGINEER
Enrico B. Maggenti
No. 46920
Exp. 6/30/11
CIVIL
STATE OF CALIFORNIA

FOR REVISIONS 4 AND 5 ONLY

5 This Sheet Intentionally Left Blank.

Caltrans Metric

ALL DIMENSIONS ARE IN MILLIMETERS UNLESS OTHERWISE SHOWN

ORIGINAL SCALE IN MILLIMETERS FOR REDUCED PLANS 0 10 20 30 40 50 60 70 80 90 100

STATE OF CALIFORNIA
DEPARTMENT OF TRANSPORTATION

DIVISION OF ENGINEERING SERVICES
STRUCTURE DESIGN
SPECIAL DESIGNS BRANCH

CU 04
EA 0120F1

BRIDGE NO. 34-0006 L/R
KILOMETER POST 13.2/13.9

SAN FRANCISCO OAKLAND BAY BRIDGE
EAST SPAN SEISMIC SAFETY PROJECT
SELF-ANCHORED SUSPENSION BRIDGE
(SUPERSTRUCTURE & TOWER)

SEISMIC JOINT (HINGE A)
CROSS SECTION

DISREGARD PRINTS BEARING EARLIER REVISION DATES → 1/24/06 8/18/06 10/30/06 1/17/08 7/17/08

REVISION DATES | SHEET 44BR5 | OF

FILE => spec_des_br_proj/04-0120F1/1:\bb\04-012001\sas\contract plans and cco\cco\cco#25\5-revision 07-30-10\dgn\aagp01.dgn

USERNAME => grivera DATE PLOTTED => 30 JUL 2010 TIME PLOTTED => 11:31:33

DIST	COUNTY	ROUTE	KILOMETER POST TOTAL PROJECT	SHEET No	TOTAL SHEETS
04	SF	80	13.2/13.9	866R3	1204

REGISTERED CIVIL ENGINEER DATE

09-15-2006
PLANS APPROVAL DATE

REGISTERED PROFESSIONAL ENGINEER
EFTHYMIOS DELIS
No. 51434
Exp. 6-30-08
CIVIL
STATE OF CALIFORNIA

The State of California or its officers or agents shall not be responsible for the accuracy or completeness of electronic copies of this plan sheet.

Caltrans now has a web site! To get to the web site, go to: http://www.dot.ca.gov

3 This Sheet Intentionally Left Blank.

REGISTERED PROFESSIONAL ENGINEER
Enrico C.G. Maggenti
No. 46920
Exp. 6/30/11
CIVIL
STATE OF CALIFORNIA

FOR REVISION 3 ONLY

CONTRACT CHANGE ORDER NO. 2550
SHEET 30 OF 36

REQUESTS FOR INFORMATION NOT ADDRESSED IN THIS CCO REMAIN IN FORCE

MARK	DATE	DESCRIPTIONS	BY	CH'D	CCO#
3	07/30/10	SEISMIC JOINT MODIFICATIONS HINGE A	RM	AA	25
2	01/07/08	SEISMIC JOINT MODIFICATIONS HINGE A	TD	AK	25
1	09/15/06	SHEET NUMBERING/LEGEND	TD	AK	25

REVISIONS

Caltrans Metric

ALL DIMENSIONS ARE IN MILLIMETERS UNLESS OTHERWISE SHOWN

ORIGINAL SCALE IN MILLIMETERS FOR REDUCED PLANS 0 10 20 30 40 50 60 70 80 90 100

DESIGN	BY E DELIS	CHECKED	A KARTOUM
DETAILS	BY A R DUDSAK	CHECKED	A KARTOUM
QUANTITIES	BY E DELIS	CHECKED	A KARTOUM

STATE OF CALIFORNIA
DEPARTMENT OF TRANSPORTATION

DIVISION OF ENGINEERING SERVICES
STRUCTURE DESIGN
SPECIAL DESIGNS BRANCH

BRIDGE NO. 34-0006 L/R
KILOMETER POST 13.2/13.9

CU 04
EA 0120F1

DISREGARD PRINTS BEARING EARLIER REVISION DATES → 1/24/06 8/18/06 10/30/06 1/1/08

REVISION DATES

SHEET 449R3 OF

SAN FRANCISCO OAKLAND BAY BRIDGE
EAST SPAN SEISMIC SAFETY PROJECT
SELF-ANCHORED SUSPENSION BRIDGE
(SUPERSTRUCTURE & TOWER)

SEISMIC JOINT (HINGE A)

INDEX TO PLANS

FILE => spec_des_br_proj/04-0120F1/1:\bb\04-012001\sas\contract plans and cco\cco\cco#25\5-revision 07-30-10\dgn\altp01.dgn

USERNAME => ariverc DATE PLOTTED => 30 JUL 2010 TIME PLOTTED => 11:34:43

DIST	COUNTY	ROUTE	KILOMETER POST TOTAL PROJECT	SHEET No	TOTAL SHEETS
04	SF	80	13.2/13.9	867R5	1204

REGISTERED CIVIL ENGINEER DATE

09-15-2006
PLANS APPROVAL DATE

REGISTERED PROFESSIONAL ENGINEER
EFTHYMIOS DELIS
No. 51434
Exp. 6-30-10
CIVIL
STATE OF CALIFORNIA

The State of California or its officers or agents shall not be responsible for the accuracy or completeness of electronic copies of this plan sheet.

Caltrans now has a web site! To get to the web site, go to: http://www.dot.ca.gov

CONTRACT CHANGE ORDER NO. 25 SO
SHEET 31 OF 36

REQUESTS FOR INFORMATION NOT ADDRESSED IN THIS CCO REMAIN IN FORCE

MARK	DATE	DESCRIPTIONS	BY	CH'D	CCO#
5	07/30/10	SEISMIC JOINT MODIFICATIONS HINGE A	RM	AA	25
4	10/30/09	SEISMIC JOINT MODIFICATIONS HINGE A	RM	AA	25
3	12/23/08	SEISMIC JOINT MODIFICATIONS HINGE A	TD	AK	25
2	12/18/07	SEISMIC JOINT MODIFICATIONS HINGE A	TD	AK	25
1	09/15/06	STEEL PLATES AND SEAL CHANGES	TD	AK	25

REVISIONS

Caltrans Metric

ALL DIMENSIONS ARE IN MILLIMETERS UNLESS OTHERWISE SHOWN

ORIGINAL SCALE IN MILLIMETERS FOR REDUCED PLANS 0 10 20 30 40 50 60 70 80 90 100

	BY	CHECKED
DESIGN	E DELIS	A KARTOUM
DETAILS	A R DUDSAK	A KARTOUM
QUANTITIES	E DELIS	A KARTOUM

STATE OF CALIFORNIA
DEPARTMENT OF TRANSPORTATION

DIVISION OF ENGINEERING SERVICES
STRUCTURE DESIGN
SPECIAL DESIGNS BRANCH

CU 04
EA 0120F1

BRIDGE NO. 34-0006 L/R
KILOMETER POST 13.2/13.9

REGISTERED PROFESSIONAL ENGINEER
Enrico C. Maggenti
No. 46920
Exp. 6/30/11
CIVIL
STATE OF CALIFORNIA

FOR REVISIONS 4 AND 5 ONLY

5 This Sheet Intentionally Left Blank.

SAN FRANCISCO OAKLAND BAY BRIDGE
EAST SPAN SEISMIC SAFETY PROJECT

SELF-ANCHORED SUSPENSION BRIDGE
(SUPERSTRUCTURE & TOWER)

SEISMIC JOINT (HINGE A)

DECK PLATE DETAILS NO 1

DISREGARD PRINTS BEARING EARLIER REVISION DATES → REVISION DATES 1/24/06 8/18/06 10/30/06 1/3/08 12/23/08 2/4/09 2/18/09 2/18/09 2/24/09

SHEET 450R5 OF

FILE => spec_des_br_proj/04-0120F1/1:\bb\04-0120F1\sas\contract plans and cco\cco\cco#25\5-revision 07-30-10\dgn\akjsb01.dgn

USERNAME => grivera DATE PLOTTED => 30 JUL 2010 TIME PLOTTED => 11:43:16

DIST	COUNTY	ROUTE	KILOMETER POST TOTAL PROJECT	SHEET No	TOTAL SHEETS
04	SF	80	13.2/13.9	868R5	1204

REGISTERED CIVIL ENGINEER DATE

09-15-2006
PLANS APPROVAL DATE

REGISTERED PROFESSIONAL ENGINEER
EFTHYMIOS DELIS
No. 51434
Exp. 6-30-10
CIVIL
STATE OF CALIFORNIA

The State of California or its officers or agents shall not be responsible for the accuracy or completeness of electronic copies of this plan sheet.

Caltrans now has a web site! To get to the web site, go to: http://www.dot.ca.gov

CONTRACT CHANGE ORDER NO. 25 SO
SHEET 32 OF 36

REQUESTS FOR INFORMATION NOT ADDRESSED IN THIS CCO REMAIN IN FORCE

MARK	DATE	DESCRIPTIONS	BY	CH'D	CCO#
5	07/30/10	SEISMIC JOINT MODIFICATIONS HINGE A	RM	AA	25
4	10/30/09	SEISMIC JOINT MODIFICATIONS HINGE A	RM	AA	25
3	12/23/08	SEISMIC JOINT MODIFICATIONS HINGE A	TD	AK	25
2	12/18/07	SEISMIC JOINT MODIFICATIONS HINGE A	TD	AK	25
1	09/15/06	DECK PLATE CHANGES	TD	AK	25

REVISIONS

Caltrans Metric

ALL DIMENSIONS ARE IN MILLIMETERS UNLESS OTHERWISE SHOWN

ORIGINAL SCALE IN MILLIMETERS FOR REDUCED PLANS 0 10 20 30 40 50 60 70 80 90 100

DESIGN	BY E DELIS	CHECKED	A KARTOUM
DETAILS	BY A R DUDSAK	CHECKED	A KARTOUM
QUANTITIES	BY E DELIS	CHECKED	A KARTOUM

STATE OF
CALIFORNIA
DEPARTMENT OF TRANSPORTATION

DIVISION OF ENGINEERING SERVICES
STRUCTURE DESIGN
SPECIAL DESIGNS BRANCH

CU 04
EA 0120F1

REGISTERED PROFESSIONAL ENGINEER
Enrico G. Maggenti
No. 46920
Exp. 6/30/11
CIVIL
STATE OF CALIFORNIA

FOR REVISIONS 4 AND 5 ONLY

5 This Sheet Intentionally Left Blank.

SAN FRANCISCO OAKLAND BAY BRIDGE
EAST SPAN SEISMIC SAFETY PROJECT
SELF-ANCHORED SUSPENSION BRIDGE
(SUPERSTRUCTURE & TOWER)

BRIDGE NO. 34-0006 L/R
KILOMETER POST 13.2/13.9

SEISMIC JOINT (HINGE A)
DECK PLATE DETAILS NO 2

DISREGARD PRINTS BEARING EARLIER REVISION DATES →

REVISION DATES: 1/24/06 8/18/06 10/30/06 1/3/08 12/23/08 3/4/09 2/10/09 2/18/09

SHEET 451R5 OF

FILE => spec_das_br_proj/04-0120F1/I:\bb\04-012001\sas\contract plans and cco\cco\cco#25\5-revision 07-30-10\dgn\akjsb02.dgn

USERNAME => artvaro DATE PLOTTED => 30 JUL 2010 TIME PLOTTED => 11:43:54

DIST.	COUNTY	ROUTE	KILOMETER POST TOTAL PROJECT	SHEET NO.	TOTAL SHEETS
08	SF	80	13.2/13.9	869R2	1204

REGISTERED ENGINEER - CIVIL

09-15-2006

PLANS APPROVAL DATE

The State of California or its officers or agents shall not be responsible for the accuracy or completeness of electronic copies of this plan sheet.

REGISTERED PROFESSIONAL ENGINEER
EFTHYMIOS DELIS
No. 51434
Exp. 6-30-08
CIVIL
STATE OF CALIFORNIA

Caltrans now has a web site! To get to the web site, go to: http://www.dot.ca.gov

REGISTERED PROFESSIONAL ENGINEER
Enrico C. Maggenti
No. 46920
Exp. 6/30/11
CIVIL
STATE OF CALIFORNIA

FOR REVISION 2 ONLY

2 This Sheet Intentionally Left Blank.

CONTRACT CHANGE ORDER NO. 25 SO
SHEET 33 OF 36

REQUESTS FOR INFORMATION NOT ADDRESSED IN THIS CCO REMAIN IN FORCE

Caltrans Metric

MARK	DATE	DESCRIPTIONS	BY	CH'D	CCO#
2	07/30/10	SEISMIC JOINT MODIFICATIONS HINGE A	RM	AA	25
1	09/15/06	CHANNEL IMPROVEMENTS	TD	AK	25

REVISIONS

	BY	CHECKED
DESIGN	E DELIS	A KARTOUM
DETAILS	A R DUDSAK	A KARTOUM
QUANTITIES	E DELIS	A KARTOUM

STATE OF CALIFORNIA
DEPARTMENT OF TRANSPORTATION

DIVISION OF ENGINEERING SERVICES
STRUCTURE DESIGN
SPECIAL DESIGNS BRANCH

BRIDGE NO. 34-0006 L/R
KILOMETER POST 13.2/13.9

SAN FRANCISCO OAKLAND BAY BRIDGE
EAST SPAN SEISMIC SAFETY PROJECT
SELF-ANCHORED SUSPENSION BRIDGE
(SUPERSTRUCTURE & TOWER)

SEISMIC JOINT (HINGE A)

CHANNEL ASSEMBLY DETAILS NO 1

ALL DIMENSIONS ARE IN MILLIMETERS UNLESS OTHERWISE SHOWN

ORIGINAL SCALE IN MILLIMETERS FOR REDUCED PLANS 0 10 20 30 40 50 60 70 80 90 100

CU 04
EA 0120F1

DISREGARD PRINTS BEARING EARLIER REVISION DATES

REVISION DATES (PRELIMINARY STAGE ONLY) 1/24/06 8/18/06 10/30/06

SHEET 452R2 OF

FILE => spec_des_br_proj/04-0120f1/akjsb03

USERNAME => arivera DATE PLOTTED => 30 JUL 2010 TIME PLOTTED => 11:44:41

DIST	COUNTY	ROUTE	KILOMETER POST TOTAL PROJECT	SHEET NO	TOTAL SHEETS
04	SF	80	13.2/13.9	870R3	1204

REGISTERED CIVIL ENGINEER DATE

09-15-2006
PLANS APPROVAL DATE

REGISTERED PROFESSIONAL ENGINEER
EFTHYMIOS DELIS
No. 51434
Exp. 6-30-08
CIVIL
STATE OF CALIFORNIA

The State of California or its officers or agents shall not be responsible for the accuracy or completeness of electronic copies of this plan sheet.

Caltrans now has a web site! To get to the web site, go to: http://www.dot.ca.gov

REGISTERED PROFESSIONAL ENGINEER
Enrico R. Maggenti
No. 46920
Exp. 6/30/11
CIVIL
STATE OF CALIFORNIA

FOR REVISIONS 2 AND 3 ONLY

3 This Sheet Intentionally Left Blank.

CONTRACT CHANGE ORDER NO. 25 SO
SHEET 34 OF 36

REQUESTS FOR INFORMATION NOT ADDRESSED IN THIS CCO REMAIN IN FORCE

MARK	DATE	DESCRIPTIONS	BY	CH'D	CCO#
3	07/30/10	SEISMIC JOINT MODIFICATIONS HINGE A	RM	AA	25
2	10/30/09	SEISMIC JOINT MODIFICATIONS HINGE A	RM	AA	25
1	09/15/06	CHANNEL IMPROVEMENTS	TD	AK	25

REVISIONS

DESIGN	BY E DELIS	CHECKED A KARTOUM	
DETAILS	BY A R DUDSAK	CHECKED A KARTOUM	
QUANTITIES	BY E DELIS	CHECKED A KARTOUM	

Caltrans Metric

ALL DIMENSIONS ARE IN MILLIMETERS UNLESS OTHERWISE SHOWN

ORIGINAL SCALE IN MILLIMETERS FOR REDUCED PLANS 0 10 20 30 40 50 60 70 80 90 100

STATE OF CALIFORNIA
DEPARTMENT OF TRANSPORTATION

DIVISION OF ENGINEERING SERVICES
STRUCTURE DESIGN
SPECIAL DESIGNS BRANCH

BRIDGE NO. 34-0006 L/R
KILOMETER POST 13.2/13.9

CU 04
EA 0120F1

DISREGARD PRINTS BEARING EARLIER REVISION DATES → 1/24/06 8/18/06 10/30/06 1/7/08

REVISION DATES

SHEET 453R3 OF

SAN FRANCISCO OAKLAND BAY BRIDGE
EAST SPAN SEISMIC SAFETY PROJECT
SELF-ANCHORED SUSPENSION BRIDGE
(SUPERSTRUCTURE & TOWER)

SEISMIC JOINT (HINGE A)

CHANNEL ASSEMBLY DETAILS NO 2

FILE => spec_des_br_proj/04-0120F1/1:\bb\04-012001\sas\contract plans and cco\cco\cco#25\5-revision 07-30-10\dgn\akjsb04.dgn

USERNAME => orivera DATE PLOTTED => 30 JUL 2010 TIME PLOTTED => 11:45:35

DIST	COUNTY	ROUTE	KILOMETER POST TOTAL PROJECT	SHEET No	TOTAL SHEETS
04	SF	80	13.2/13.9	871R4	1204

REGISTERED CIVIL ENGINEER DATE

09-15-2006
PLANS APPROVAL DATE

REGISTERED PROFESSIONAL ENGINEER
EFTHYMIOS DELIS
No. 51434
Exp. 6-30-10
CIVIL
STATE OF CALIFORNIA

The State of California or its officers or agents shall not be responsible for the accuracy or completeness of electronic copies of this plan sheet.

Caltrans now has a web site! To get to the web site, go to: http://www.dot.ca.gov

CONTRACT CHANGE ORDER NO. 25 SO
SHEET 35 OF 36

REQUESTS FOR INFORMATION NOT ADDRESSED IN THIS CCO REMAIN IN FORCE

MARK	DATE	DESCRIPTIONS	BY	CH'D	CCO#
4	07/30/10	SEISMIC JOINT MODIFICATIONS HINGE A	RM	AA	25
3	12/23/08	SEISMIC JOINT MODIFICATIONS HINGE A	TD	AK	25
2	12/18/07	SEISMIC JOINT MODIFICATIONS HINGE A	TD	AK	25
1	09/15/06	SUPPORT PLATE IMPROVEMENTS	TD	AK	25

REVISIONS

DESIGN	BY E DELIS	CHECKED	A KARTOUM
DETAILS	BY A R DUDSAK	CHECKED	A KARTOUM
QUANTITIES	BY E DELIS	CHECKED	A KARTOUM

STATE OF CALIFORNIA
DEPARTMENT OF TRANSPORTATION

DIVISION OF ENGINEERING SERVICES
STRUCTURE DESIGN
SPECIAL DESIGNS BRANCH

BRIDGE NO. 34-0006 L/R
KILOMETER POST 13.2/13.9

REGISTERED PROFESSIONAL ENGINEER
Enrico C. Maggenti
No. 46920
Exp. 6/30/11
CIVIL
STATE OF CALIFORNIA

FOR REVISION 4 ONLY

4 This Sheet Intentionally Left Blank.

SAN FRANCISCO OAKLAND BAY BRIDGE
EAST SPAN SEISMIC SAFETY PROJECT

SELF-ANCHORED SUSPENSION BRIDGE
(SUPERSTRUCTURE & TOWER)

SEISMIC JOINT (HINGE A)

SUPPORT PLATE DETAILS

Caltrans Metric

ALL DIMENSIONS ARE IN MILLIMETERS UNLESS OTHERWISE SHOWN

ORIGINAL SCALE IN MILLIMETERS FOR REDUCED PLANS 0 10 20 30 40 50 60 70 80 90 100

CU 04
EA 0120F1

DISREGARD PRINTS BEARING EARLIER REVISION DATES → 1/24/06 8/30/06 10/30/06 1/2/08 12/23/08 3/4/09 2/13/09 2/16/09

REVISION DATES

SHEET 454R4 OF

FILE => spec_des_br_proj/04-0120F1/1:\bb\04-012001\sas\contract plans and cco\cco\cco#25\5-revision 07-30-10\dgn\akjsb05.dgn

USERNAME => grivera DATE PLOTTED => 30 JUL 2010 TIME PLOTTED => 11:48:31

DIST	COUNTY	ROUTE	KILOMETER POST TOTAL PROJECT	SHEET No	TOTAL SHEETS
04	SF	80	13.2/13.9	872R3	1204

REGISTERED CIVIL ENGINEER DATE

09-15-2006
PLANS APPROVAL DATE

REGISTERED PROFESSIONAL ENGINEER
EFTHYMIOS DELIS
No. 51434
Exp. 6-30-08
CIVIL
STATE OF CALIFORNIA

The State of California or its officers or agents shall not be responsible for the accuracy or completeness of electronic copies of this plan sheet.

Caltrans now has a web site! To get to the web site, go to: http://www.dot.ca.gov

CONTRACT CHANGE ORDER NO. 25 50
SHEET 36 OF 36

REQUESTS FOR INFORMATION NOT ADDRESSED IN THIS CCO REMAIN IN FORCE

MARK	DATE	DESCRIPTIONS	BY	CH'D	CCO#
3	07/30/10	SEISMIC JOINT MODIFICATIONS HINGE A	RM	AA	25
2	12/18/07	SEISMIC JOINT MODIFICATIONS HINGE A	TD	AK	25
1	09/15/06	BLOCK OUT DETAILS	TD	AK	25

REVISIONS

ALL DIMENSIONS ARE IN MILLIMETERS UNLESS OTHERWISE SHOWN

ORIGINAL SCALE IN MILLIMETERS FOR REDUCED PLANS 0 10 20 30 40 50 60 70 80 90 100

DESIGN	BY E DELIS	CHECKED	A KARTOUM
DETAILS	BY A R DUDSAK	CHECKED	A KARTOUM
QUANTITIES	BY E DELIS	CHECKED	A KARTOUM

STATE OF CALIFORNIA
DEPARTMENT OF TRANSPORTATION

DIVISION OF ENGINEERING SERVICES
STRUCTURE DESIGN
SPECIAL DESIGNS BRANCH

CU 04
EA 0120F1

REGISTERED PROFESSIONAL ENGINEER
Enrico C. Maggenti
No. 46920
Exp. 6/30/11
CIVIL
STATE OF CALIFORNIA

FOR REVISION 3 ONLY

3 This Sheet Intentionally Left Blank.

BRIDGE NO. 34-0006 L/R
KILOMETER POST 13.2/13.9

SAN FRANCISCO OAKLAND BAY BRIDGE
EAST SPAN SEISMIC SAFETY PROJECT

SELF-ANCHORED SUSPENSION BRIDGE
(SUPERSTRUCTURE & TOWER)

SEISMIC JOINT (HINGE A)

REINFORCEMENT DETAILS

DISREGARD PRINTS BEARING EARLIER REVISION DATES → 1/23/06 8/18/06 10/30/06 1/7/08

REVISION DATES

SHEET 455R3 OF

FILE => spec_des_br_proj/04-0120F1/1:\bb\04-012001\sas\contract plans and cco\cco\cco#25\5-revision 07-30-10\dgn\akjsb06.dgn

USERNAME => grivera DATE PLOTTED => 30 JUL 2010 TIME PLOTTED => 11:49:05

STATE OF CALIFORNIA - DEPARTMENT OF TRANSPORTATION

CONTRACT CHANGE ORDER MEMORANDUM

TO: Tony Anziano, Program Manager /	FILE: E.A. 04 - 0120F4 CO-RTE-PM SF-80-13.2/13.9 FED. NO.
FROM: Kannu Balan, Senior TE	
CCO#: 25 SUPPLEMENT#: 0 Category Code: CHSX	CONTINGENCY BALANCE (incl. this change) $147,307,373.58
COST: $1,053,548.00 INCREASE ☑ DECREASE ☐	HEADQUARTERS APPROVAL REQUIRED? ☑ YES ☐ NO
SUPPLEMENTAL FUNDS PROVIDED: $0.00	IS THIS REQUEST IN ACCORDANCE WITH ENVIRONMENTAL DOCUMENTS? ☑ YES ☐ NO
CCO DESCRIPTION: Seismic Joint Modifications Hinge A	**PROJECT DESCRIPTION:** CONSTRUCT SELF-ANCHORED SUSPENSION BRIDGE

Original Contract Time:	Time Adj. This Change:	Previously Approved CCO Time Adjustments:	Percentage Time Adjusted: (including this change)	Total # of Unreconciled Deferred Time CCO(s): (including this change)
2490 Day(s)	0 Day(s)	501 Day(s)	20 %	3

THIS CHANGE ORDER PROVIDES FOR:

Modifying the Hinge A seismic joint.

Revising Special Provisions Sections 10-1.54 "SEISMIC JOINT," and 10-1.70 "CLEAN AND PAINT STRUCTURAL STEEL (SEISMIC JOINT, SPHERICAL BUSHING BEARING, AND SHEAR KEY)."

In October of 2006, Structure Design (Mike Whiteside) requested to modify the Hinge A seismic joint including material changes, the shape of steel top plates, and the construction sequence. These changes, which were to be included in Addendum 8 to the SAS contract, were never issued prior to the contract bid opening. Instead the TBPOC decided not to issue Addendum 8, requiring the work to be addressed as a change order. Since that time, additional design iterations have taken place.

The revised design has changed tapered plates to flat plates and incorporates a compressible Trelleborg neoprene element. The seismic joint width is changed to match the width of the support plates and deck plates. An extra diverter plate has been added and the deck and support plates have been widened under the barrier rail to make the seismic joint watertight at the barrier locations. Changes have been made to the seismic joint to coordinate fit-up with the barrier rail. The machined pattern on the top surface of the deck plates is changed to provide better friction. The shear studs on the vertical face of the channel assembly are staggered and straightened as requested by Maintenance (Bill Zanetich) to prevent delamination between the concrete and steel plate. Alternate channel assembly details were provided since there was not adequate bearing between the deck plates and the channel assemblies. Sixteen additional 100 mm thick plates were purchased and machined to replace the plates that did not meet the revised tighter tolerances required under the new design, of which two of the additional plates were used in CCO 140 (Seismic Joint Testing).

This change order resolves the costs associated with Contractor Request for Information (RFI) numbers 2463 and 2507 with respect to changes listed above. The installation cost will be compensated in a future CCO.

The amount of $1,191,577.00 for changes prior to November 17, 2009, was paid in CCO 108S1 (Fabrication Recovery). The additional cost of this change order is $1,053,548.00 for changes that occurred after November 17, 2009, which can be financed from the contingency fund. A detailed cost analysis is on file.

No time adjustment is warranted as this change order does not affect the controlling operation.

This change order has concurrence from Brian Maroney (Principal TE), Ken Terpstra (Project Manager), Rich Foley (HQ Oversight), William Casey (Sup. TE), Wenyi Long (Bridge Design), Lina Ellis (Maintenance), and Jing Chen (District Design).

Toll Bridge Program Oversight Committee (TBPOC) approved this change order on November 3, 2011, for a value not to exceed amount of $1.5M.

ADA Notice: For individuals with sensory disabilities, this document is available in alternate formats. For information call: (916) 654-6410 or TDD (916) 654-3880 or write Records and Forms Management, 1120 N Street, MS-89, Sacramento, CA 95814.

CONCURRED BY:			
Construction Engineer:	Dep TB Proj Man, Brian Maroney	Date	9/19/11
Bridge Engineer:	William Casey, Sup TE	Date	9/16/11
Project Engineer:	CT Oversight, Wenyi Long, P.E.	Date	9/9/11
Project Manager:	Proj Manager, Ken Terpstra	Date	11/4/11
FHWA Rep.:		Date	
Environmental:		Date	
Other (specify):	Struct. Maint, Lina Ellis	Date	9/8/11
Other (specify):	HQ, Rich Foley	Date	9/16/11
District Prior Approval By:	HQ, Ken Darby	Date	12/21/06
HQ (Issue Approve) By:		Date	
Resident Engineer's Signature:		Date	11-8-11

ESTIMATE OF COST

	THIS REQUEST	TOTAL TO DATE
ITEMS	$0.00	$0.00
FORCE ACCOUNT	$0.00	$0.00
AGREED PRICE	$0.00	$0.00
ADJUSTMENT	$1,053,548.00	$1,053,548.00
TOTAL	$1,053,548.00	$1,053,548.00

FEDERAL PARTICIPATION

☐ PARTICIPATING ☐ PARTICIPATING IN PART ☑ NONE
☐ NON-PARTICIPATING (MAINTENANCE) ☐ NON-PARTICIPATING

FEDERAL SEGREGATION (if more than one Funding Source or P.I.P. type)
☐ CCO FUNDED PER CONTRACT ☐ CCO FUNDED AS FOLLOWS

FEDERAL FUNDING SOURCE	PERCENT

ADA Notice: For individuals with sensory disabilities, this document is available in alternate formats. For information call: (916) 654-6410 or TDD (916) 654-3880 or write Records and Forms Management, 1120 N Street, MS-89, Sacramento, CA 95814.

DIST.	COUNTY	ROUTE	KILOMETER POST TOTAL PROJECT	SHEET NO.	TOTAL SHEETS
04	SF	80	13.2/13.9	852R3	1204

REGISTERED ENGINEER - CIVIL

12-6-04
PLANS APPROVAL DATE

REGISTERED PROFESSIONAL ENGINEER Marwan N. Nader No. C 054426 Exp. 12/31/11 CIVIL STATE OF CALIFORNIA

The State of California or its officers or agents shall not be responsible for the accuracy or completeness of electronic copies of this plan sheet.

T.Y. LIN / MOFFATT & NICHOL
825 BATTERY STREET
SAN FRANCISCO, CA 94111

Caltrans now has a web site! To get to the web site, go to: http://www.dot.ca.gov

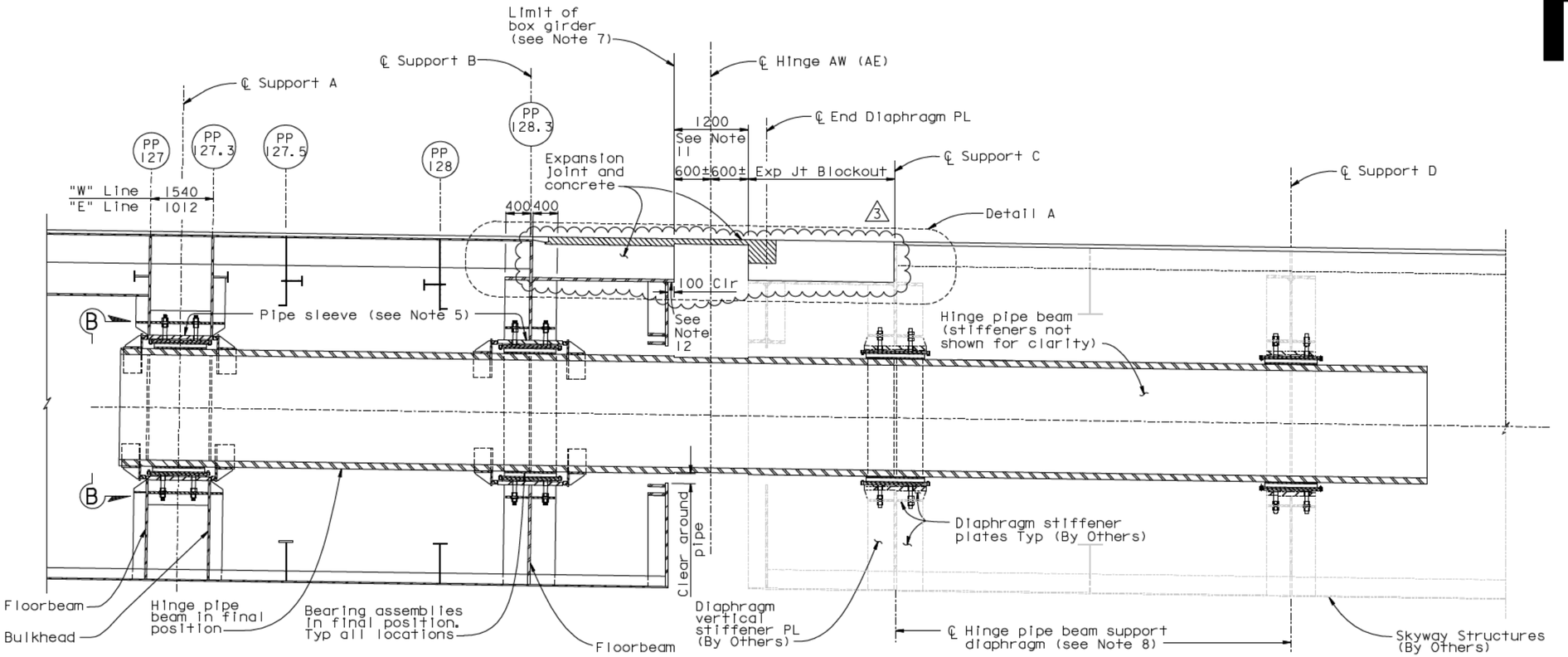

SECTION A-A (Orientation of Expansion Joint shown for Eastbound, see Note 10)

1:40

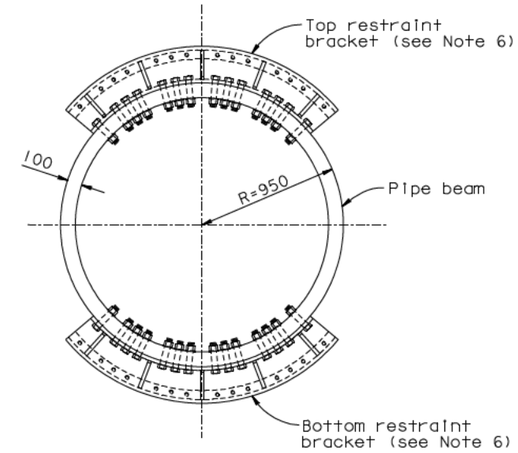

END VIEW B-B

1:20

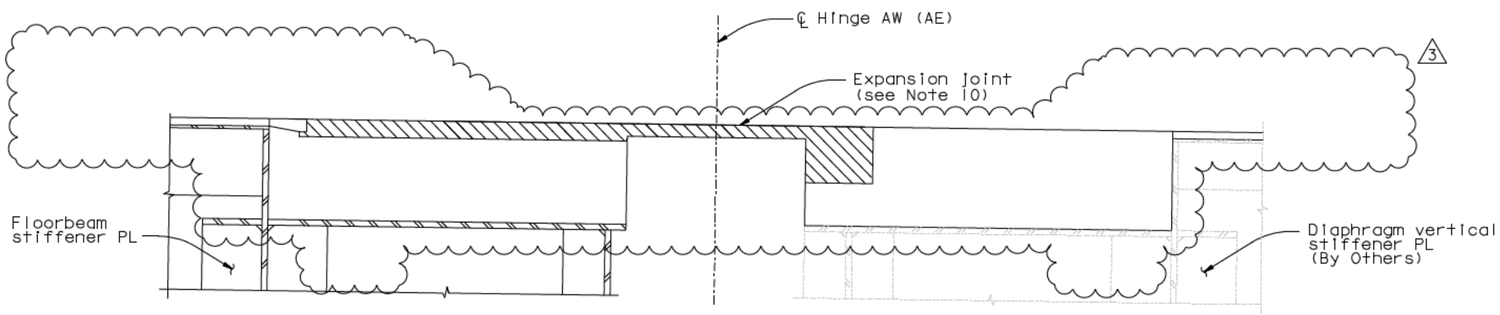

DETAIL A

1:20

NOTES:

1. For locations and alignment of floor beams at PP127, PP127.5 and PP128, see "Girder Framing Plan No. 4" sheet.
2. Bulkhead at PP127.3 is parallel to the floor beam at PP 127.
3. Floorbeam at PP 128.3 is parallel to ℄ Hinge A. For locations, see "Hinge A Geometry Layout" sheets.
4. For expansion joint details, see "Hinge A Expansion Joint Details" sheets.
5. Pipe sleeve shall be parallel to pipe beam.
6. For restraint bracket details, see "Hinge A Details No. 9" sheet.
7. For girder details east of PP 128.3, see "Girder At East Transition No. 8" and "Floorbeam At East Transition No. 10" sheets.
8. For hinge bearing support location, see "Hinge A Geometry Layout" sheets.
9. For "Hinge A Details" sheets, the Contractor shall verify all controlling field dimensions before ordering or fabricating any material.
10. For orientation of expansion joints, see "Hinge A Expansion Joint Details" plans. (3)
11. The as-built gap at Hinge A shall be 1200 minimum. The limit of the concrete blockout shall be adjusted based on the field conditions of the Skyway.
12. The Contractor shall trim the blockout end PL and blockout bottom PL to maintain an expansion gap of 1200 minimum.

CONTRACT CHANGE ORDER NO. ____
SHEET ____ OF ____

REQUESTS FOR INFORMATION NOT ADDRESSED IN THIS CCO REMAIN IN FORCE

MARK	DATE	DESCRIPTIONS	BY	CH'D	CCO#
3	07/30/10	SEISMIC JOINT MODIFICATIONS HINGE A	CR	MN	25
2	04/09/10	HINGE A MODIFICATIONS	MN	NV	120
1	11/06/06	PER CALTRANS SEISMIC JOINT MODIFICATION	MN	AS	25

REVISIONS

R. Vallizadeh/V. Toan/Y.L./W.L./F.C.
DESIGN OVERSIGHT
SIGN OFF DATE 07/30/10

Rev. Date: 5-18-98

	BY	CHECKED
DESIGN	M. Nader	N. Vo
DETAILS	G. Baker	N. Vo
QUANTITIES	G. Baker	N. Vo

PREPARED FOR THE STATE OF CALIFORNIA DEPARTMENT OF TRANSPORTATION

ALL DIMENSIONS ARE IN MILLIMETERS UNLESS OTHERWISE SHOWN

R. Manzanarez
PROJECT ENGINEER

BRIDGE NO. 34-0006L/R
KILOMETER POST 13.2/13.9

SAN FRANCISCO OAKLAND BAY BRIDGE
EAST SPAN SEISMIC SAFETY PROJECT
SELF-ANCHORED SUSPENSION BRIDGE
(SUPERSTRUCTURE & TOWER)

HINGE A DETAILS NO. 1

ORIGINAL SCALE IN MILLIMETERS FOR REDUCED PLANS 0 10 20 30 40 50 60 70 80 90 100

CU 04
EA 0120F1

DISREGARD PRINTS BEARING EARLIER REVISION DATES

REVISION DATES (PRELIMINARY STAGE ONLY) 05/31/01 04/08/02 07/01/02 12/14/02 07/18/03

SHEET 435R3 OF

FILE -> I:\bb\04-012001\sas\contract plans and cco\cco\cco#25\5-revision 07-30-10\dgn\ahhng01.dgn

USERNAME -> grivera DATE PLOTTED -> 30 JUL 2010 TIME PLOTTED -> 11:34:01

100 % PS&E

DIST.	COUNTY	ROUTE	KILOMETER POST TOTAL PROJECT	SHEET NO.	TOTAL SHEETS
04	SF	80	13.2/13.9	863R3	1204

REGISTERED ENGINEER - CIVIL

12-6-04
PLANS APPROVAL DATE

REGISTERED PROFESSIONAL ENGINEER Marwan N. Nader No. C 054426 Exp. 12/31/11 CIVIL STATE OF CALIFORNIA

The State of California or its officers or agents shall not be responsible for the accuracy or completeness of electronic copies of this plan sheet.

T.Y. LIN / MOFFATT & NICHOL
825 BATTERY STREET
SAN FRANCISCO, CA 94111

Caltrans now has a web site! To get to the web site, go to: http://www.dot.ca.gov

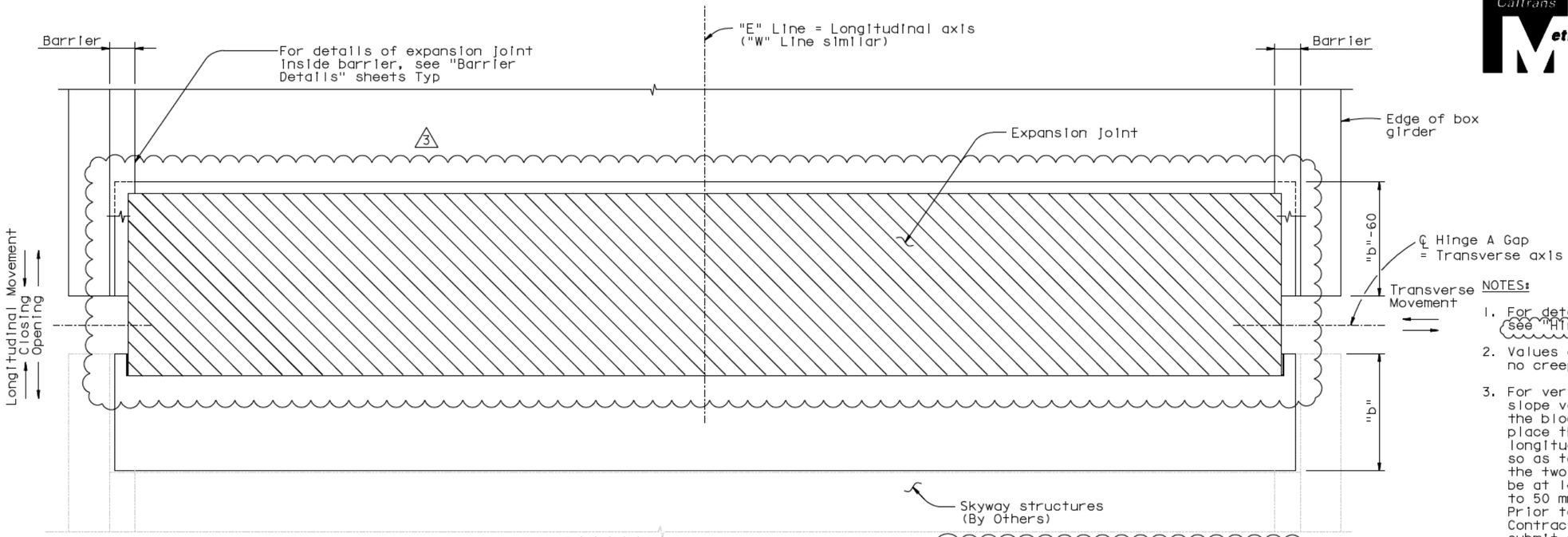

LAYOUT-EXPANSION JOINT

1:50

NOTES:

1. For details and orientation of expansion joint, see "Hinge A Expansion Joint Detail No.3" sheet.
2. Values are for mean temperature of 20°C and no creep and shrinkage.
3. For vertical misalignment due to profile or cross slope variance between the Skyway and SAS girders the blockout concrete depth shall be varied to place the expansion joint following the longitudinal slope with constant cross slope so as to have a smooth transition between the two roadways. The deck overlay shall be at least 25 mm thick and shall be run off to 50 mm thick at a rate no steeper than 1:100. Prior to installing the expansion joint the Contractor shall conduct an as-built survey and submit the proposed layout of the expansion joint for review and approval.
4. For blockout dimensions "b" & "c", see "Hinge A Expansion Joint Details No.2" sheet.

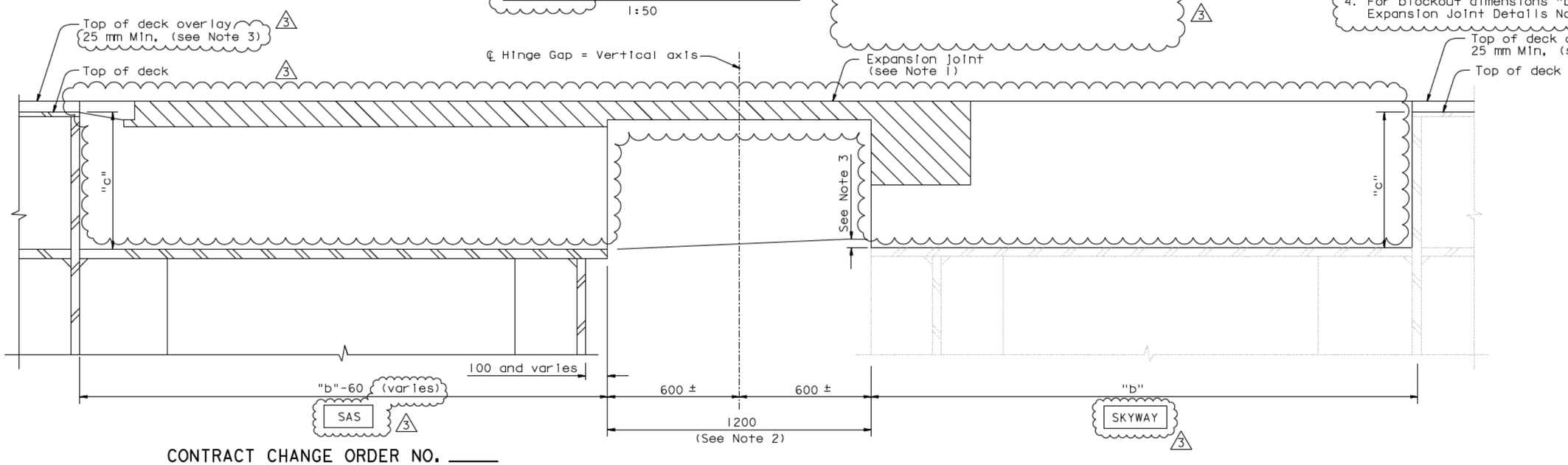

TYPICAL SECTION

1:10

CONTRACT CHANGE ORDER NO. ____
SHEET ____ OF ____

REQUESTS FOR INFORMATION NOT ADDRESSED IN THIS CCO REMAIN IN FORCE

MARK	DATE	DESCRIPTIONS	BY	CH'D	CCO#
3	07/30/10	SEISMIC JOINT MODIFICATIONS HINGE A	CR	MN	25
2	04/09/10	HINGE A MODIFICATIONS	MN	NV	120
1	11/06/06	PER CALTRANS SEISMIC JOINT MODIFICATIONS	MN	AS	25

REVISIONS

R. Vallzadeh/V. Toan/Y.L./W.L./F.C.
DESIGN OVERSIGHT
SIGN OFF DATE 07/30/10

	BY	CHECKED
DESIGN	M. Nader	N. Vo
DETAILS	J. Krizek	N. Vo
QUANTITIES	J. Krizek	N. Vo

PREPARED FOR THE STATE OF CALIFORNIA DEPARTMENT OF TRANSPORTATION

R. Manzanarez
PROJECT ENGINEER

BRIDGE NO. 34-0006L/R
KILOMETER POST 13.2/13.9

ALL DIMENSIONS ARE IN MILLIMETERS UNLESS OTHERWISE SHOWN

SAN FRANCISCO OAKLAND BAY BRIDGE
EAST SPAN SEISMIC SAFETY PROJECT
SELF-ANCHORED SUSPENSION BRIDGE
(SUPERSTRUCTURE & TOWER)

HINGE A EXPANSION JOINT DETAILS NO. 1

Rev. Date: 5-18-98

ORIGINAL SCALE IN MILLIMETERS FOR REDUCED PLANS 0 10 20 30 40 50 60 70 80 90 100

CU 04
EA 0120F1

DISREGARD PRINTS BEARING EARLIER REVISION DATES → 04/09/02 07/01/02 12/18/02 07/18/03

SHEET 446R3 OF

FILE -> I:\bb\04-012001\sas\contract plans and cco\cco\cco#25\5-revision 07-30-10\dgn\akjnt03.dgn

100 % PS&E

DATE PLOTTED -> 30 JUL 2010 TIME PLOTTED -> 11:42:36

USERNAME -> arivera

DIST.	COUNTY	ROUTE	KILOMETER POST TOTAL PROJECT	SHEET NO.	TOTAL SHEETS
04	SF	80	13.2/13.9	864R1	1204

Caltrans Metric

REGISTERED ENGINEER - CIVIL

12-06-04
PLANS APPROVAL DATE

REGISTERED PROFESSIONAL ENGINEER Marwan N. Nader No. C 054426 Exp. 12/31/11 CIVIL STATE OF CALIFORNIA

The State of California or its officers or agents shall not be responsible for the accuracy or completeness of electronic copies of this plan sheet.

T.Y. LIN / MOFFATT & NICHOL
825 BATTERY STREET
SAN FRANCISCO, CA 94111

Caltrans now has a web site! To get to the web site, go to: http://www.dot.ca.gov

EXPANSION JOINT MOVEMENT DATA

Location	Longitudinal movement demand (Includes effect due to rotation @ vertical axis - SEE) (Includes effect due to rotation @ trans axis - Live)							Transverse movement demand	Rotation demand (SEE)		
	Closing			Opening					@ vertical axis	@ transverse axis	@ longitudinal axis
	Trise	SEE	Live	CS	Tdrop	SEE	Live				
	(mm)	(mm)	(mm)	(mm)	(mm)	(mm)	(mm)	(mm)	(rad)	(rad)	(rad)
Hinge AW, AE	179	1140	62	160	179	1170	16	24	0.009	0.037	0.008

BLOCKOUT DIMENSIONS

Hinge	Blockout Data		Deck overlay thickness (mm)
	"b" (mm)	"c" (mm)	
AW, AE	2465	625	Varies

LEGEND:

Trise - Uniform temperature rise and positive temperature gradient

Tdrop - Uniform temperature drop and negative temperature gradient

CS - Creep and shrinkage (includes a factor of 1.5 over calculated theoretical values at the inception of Skyway)

SEE - Safety Evaluation Earthquake

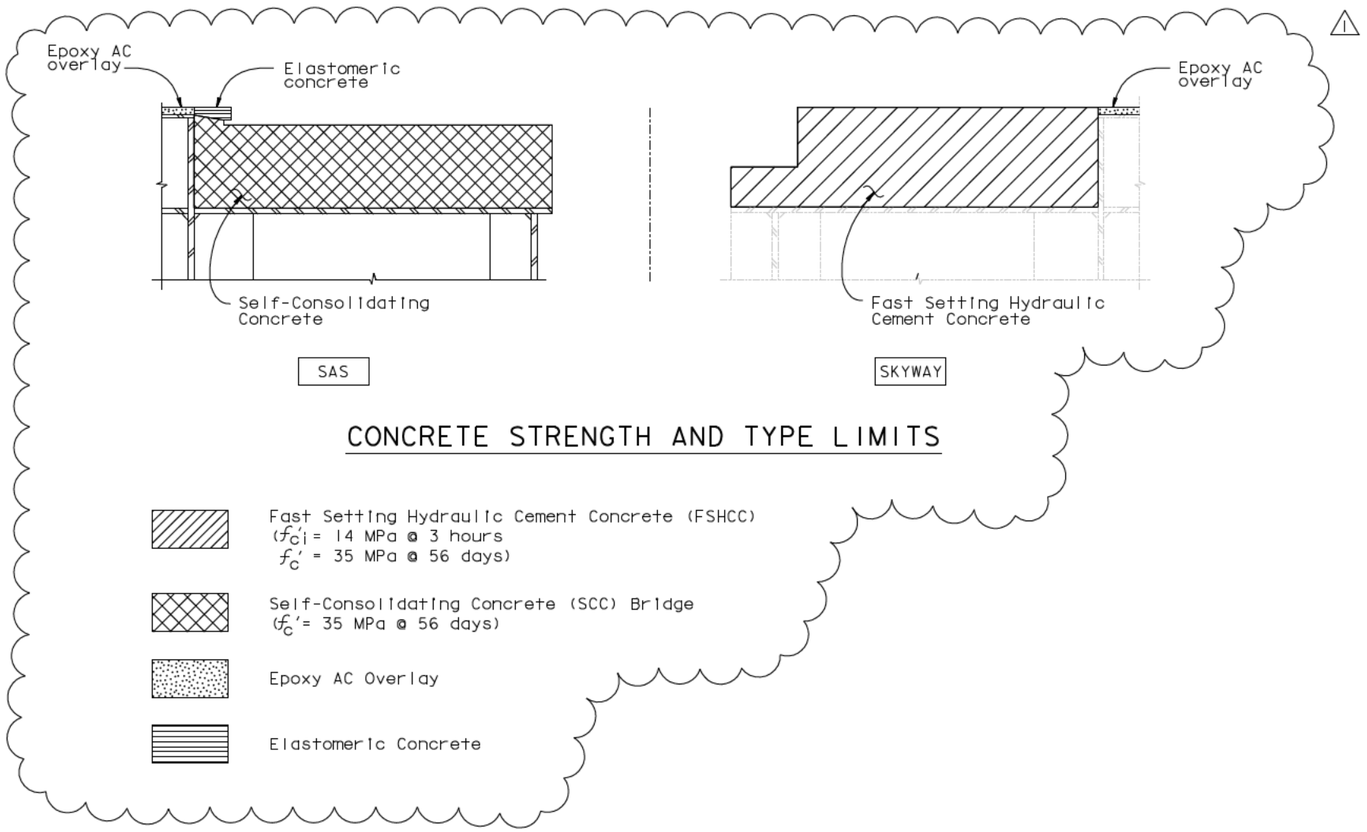

CONTRACT CHANGE ORDER NO. ____
SHEET ____ OF ____

REQUESTS FOR INFORMATION NOT ADDRESSED IN THIS CCO REMAIN IN FORCE

ALL DIMENSIONS ARE IN MILLIMETERS UNLESS OTHERWISE SHOWN

R. Vallizadeh/V. Toan/Y.L./W.L./F.C.
DESIGN OVERSIGHT
SIGN OFF DATE 07/30/10

MARK	DATE	DESCRIPTIONS	BY	CH'D	CCO#
1	07/30/10	SEISMIC JOINT MODIFICATIONS HINGE A	CR	MN	25

REVISIONS

DESIGN	BY M. Nader	CHECKED N. Vo	
DETAILS	BY J. Krizek	CHECKED N. Vo	
QUANTITIES	BY J. Krizek	CHECKED N. Vo	

PREPARED FOR THE STATE OF CALIFORNIA DEPARTMENT OF TRANSPORTATION

R. Manzanarez
PROJECT ENGINEER

BRIDGE NO. 34-0006L/R
KILOMETER POST 13.2/13.9

SAN FRANCISCO OAKLAND BAY BRIDGE
EAST SPAN SEISMIC SAFETY PROJECT
SELF-ANCHORED SUSPENSION BRIDGE
(SUPERSTRUCTURE & TOWER)

HINGE A EXPANSION JOINT DETAILS NO. 2

Rev. Date: 5-18-98

ORIGINAL SCALE IN MILLIMETERS FOR REDUCED PLANS 0 10 20 30 40 50 60 70 80 90 100

CU 04
EA 0120F1

DISREGARD PRINTS BEARING EARLIER REVISION DATES

REVISION DATES (PRELIMINARY STAGE ONLY) 04/09/02 07/01/02 12/13/02 07/18/03

SHEET 447R1 OF

FILE -> I:\bb\04-0120F1\sas\contract plans and cco\cco\cco#25\5-revision 07-30-10\dgn\akjnt01.dgn

100 % PS&E

DATE PLOTTED -> 30 JUL 2010 TIME PLOTTED -> 11:35:18

USERNAME -> arivera

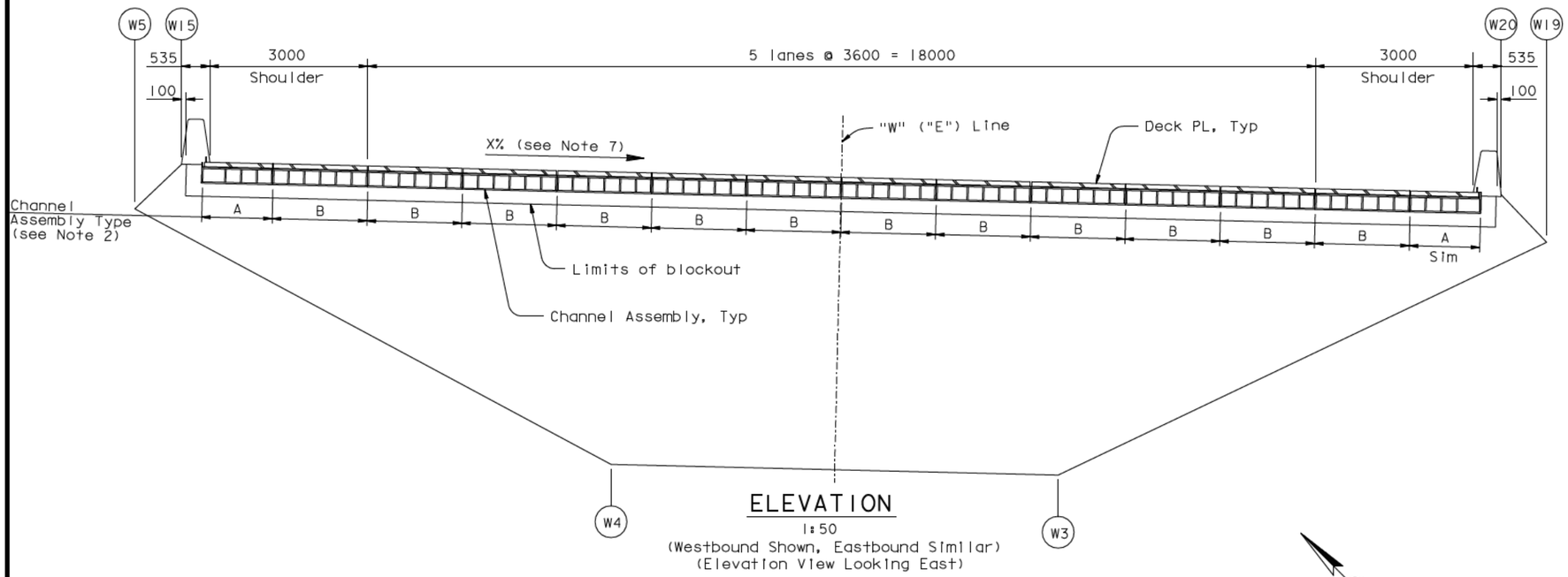

ELEVATION

1:50

(Westbound Shown, Eastbound Similar)

(Elevation View Looking East)

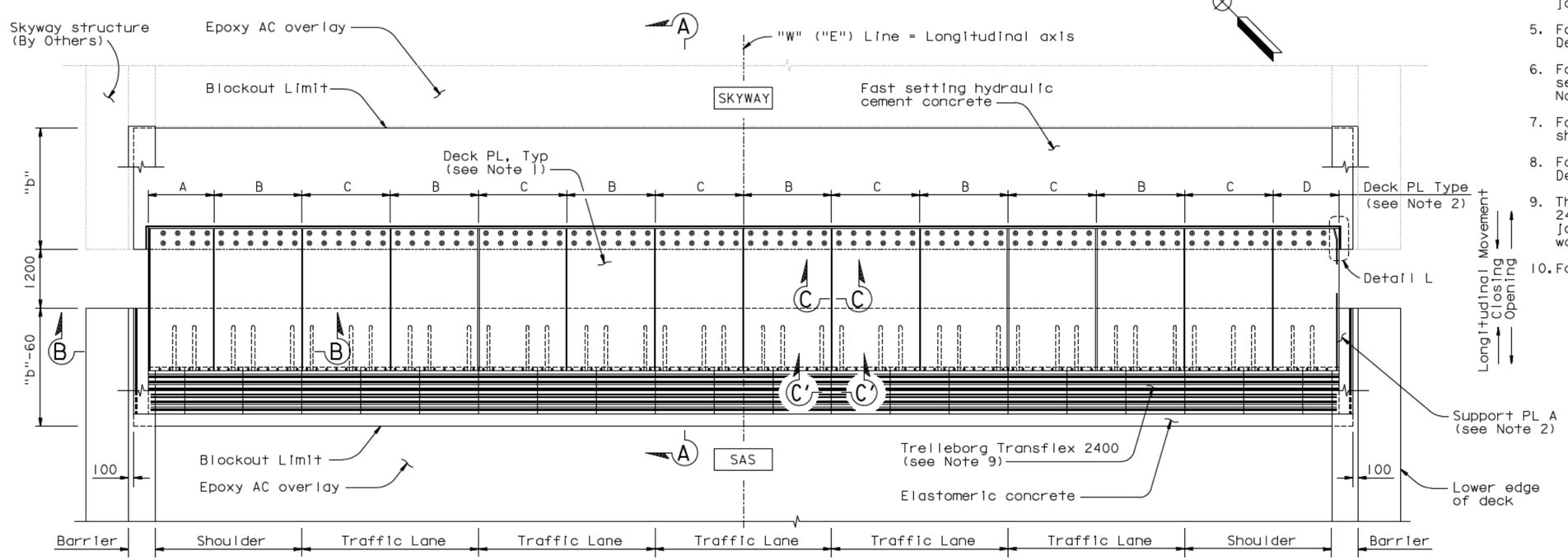

PLAN-EXPANSION JOINT

1:50

(Westbound Shown, Eastbound Similar)

CONTRACT CHANGE ORDER NO. _____

SHEET ____ OF ____

REQUESTS FOR INFORMATION NOT ADDRESSED IN THIS CCO REMAIN IN FORCE

Caltrans Metric

DIST.	COUNTY	ROUTE	KILOMETER POST TOTAL PROJECT	SHEET NO.	TOTAL SHEETS
04	SF	80	13.2/13.9	864S1	1204

REGISTERED ENGINEER - CIVIL

07-30-10

PLANS APPROVAL DATE

REGISTERED PROFESSIONAL ENGINEER Marwan N. Nader No. C 054426 Exp. 12/31/11 CIVIL STATE OF CALIFORNIA

The State of California or its officers or agents shall not be responsible for the accuracy or completeness of electronic copies of this plan sheet.

T.Y. LIN / MOFFATT & NICHOL
825 BATTERY STREET
SAN FRANCISCO, CA 94111

Caltrans now has a web site! To get to the web site, go to: http://www.dot.ca.gov

NOTES:

1. For Deck Plates A, B, C and D, see "Hinge A Expansion Joint Details No.5" sheet.
2. Deck Plate A and D matches with Support Plate A and the Channel Assembly A (Module A). Deck Plate B and C matches with Support Plate B and the Channel Assembly B (Module B). For details, see "Hinge A Expansion Joint Details No.5" and "Hinge A Expansion Joint Details No.7" sheets.
3. One module "B" is placed per half traffic lane.
4. Portions of barriers are not shown for clarity. For barrier details at expansion joint, see "Barrier Details" sheets.
5. For Section A-A, see "Hinge A Expansion Joint Details No.4" sheet.
6. For Section B-B, Section C-C & Section C'-C', see "Hinge A Expansion Joint Details No.5" sheet.
7. For cross slope, see "Barrier Details No.5" sheet.
8. For Detail L, see "Hinge A Expansion Joint Details No.8" sheet.
9. The expansion joint shall be 1200 wide Transflex 2400 module with movement rating of 600. The joint between the Transflex modules shall be water tight.
10. For general notes, see "General Notes" sheets.

ALL DIMENSIONS ARE IN MILLIMETERS UNLESS OTHERWISE SHOWN

R. Valizadeh/V. Toan/Y. L./W. L./F. C.
DESIGN OVERSIGHT
Roya Valizadeh / Vong Toan / Y. Liu
SIGN OFF DATE 07/30/10

MARK	DATE	DESCRIPTIONS	BY	CH'D	CCO#
0	07/30/10	SEISMIC JOINT MODIFICATIONS HINGE A	CR	MN	25

REVISIONS

DESIGN	BY C. Redfield	CHECKED M. Nader	
DETAILS	BY H. Patel	CHECKED M. Benolt	
QUANTITIES	BY H. Patel	CHECKED J. Duxbury	

PREPARED FOR THE STATE OF CALIFORNIA DEPARTMENT OF TRANSPORTATION

R. Manzanarez
PROJECT ENGINEER

BRIDGE NO. 34-0006L/R
KILOMETER POST 13.2/13.9

SAN FRANCISCO OAKLAND BAY BRIDGE
EAST SPAN SEISMIC SAFETY PROJECT
SELF-ANCHORED SUSPENSION BRIDGE
(SUPERSTRUCTURE & TOWER)

HINGE A EXPANSION JOINT DETAILS NO.3

Rev. Date: 5-18-98

ORIGINAL SCALE IN MILLIMETERS FOR REDUCED PLANS 0 10 20 30 40 50 60 70 80 90 100

CU 04
EA 0120F1

DISREGARD PRINTS BEARING EARLIER REVISION DATES 07/30/10

REVISION DATES (PRELIMINARY STAGE ONLY)

SHEET 447S1 OF

FILE -> I:\bb\04-0120I\sas\contract plans and cco\cco\cco#25\5-revision 07-30-10\dgn\akjnt01a.dgn

100 % PS&E

USERNAME -> arivera DATE PLOTTED -> 30 JUL 2010 TIME PLOTTED -> 11:36:24

DIST.	COUNTY	ROUTE	KILOMETER POST TOTAL PROJECT	SHEET NO.	TOTAL SHEETS
04	SF	80	13.2/13.9	864S2R2	1204

REGISTERED ENGINEER - CIVIL

07-30-10

PLANS APPROVAL DATE

The State of California or its officers or agents shall not be responsible for the accuracy or completeness of electronic copies of this plan sheet.

REGISTERED PROFESSIONAL ENGINEER Marwan N. Nader No. C 054426 Exp. 12/31/11 CIVIL STATE OF CALIFORNIA

T.Y. LIN / MOFFATT & NICHOL
825 BATTERY STREET
SAN FRANCISCO, CA 94111

Caltrans now has a web site! To get to the web site, go to: http://www.dot.ca.gov

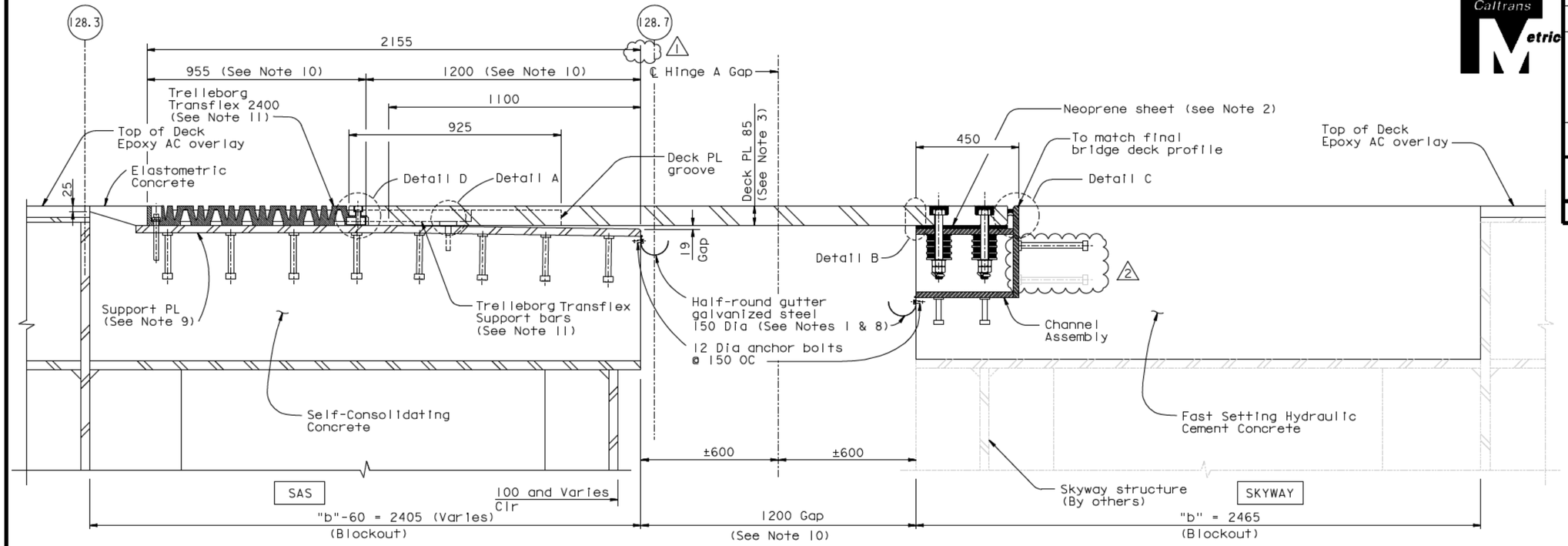

SECTION A-A

1:10

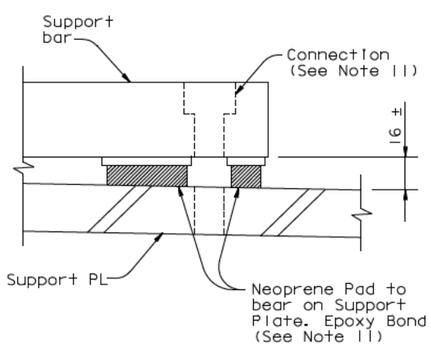

DETAIL A

1:2

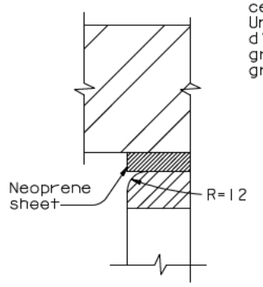

DETAIL B

1:2

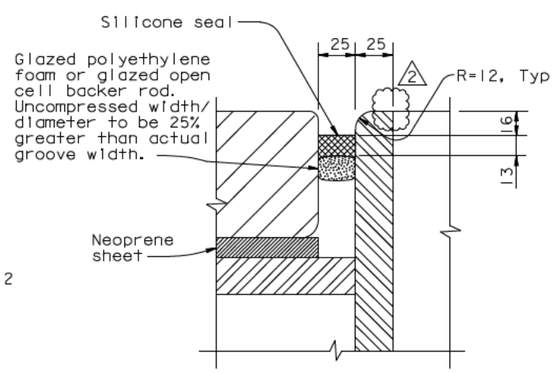

DETAIL C

1:2

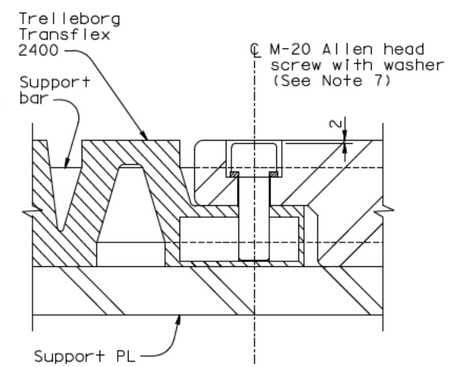

DETAIL D

1:2

NOTES:

1. Use caulking or sealant between gutter and concrete.
2. 40 mm holes in neoprene sheets shall be drilled or punched so that the neoprene is not distorted at the time of installation. See "Hinge A Expansion Joint Details No.8" sheet.
3. For deck plate layout and details, see "Hinge A Expansion Joint Details No.3" sheet. For deck plate friction groove pattern, see "Hinge A Expansion Joint Details No. 6" sheet.
4. For mild steel reinforcement in blockout areas, see "Hinge A Expansion Joint Details No.10" sheet.
5. For channel assembly details, see "Hinge A Expansion Joint Details No.7" and "Hinge A Expansion Joint Details No.8" sheets.
6. Place deck plate, support plate and channel assembly so that full bearing is achieved between 1) deck plate and channel assembly and 11) deck plate and support plates as shown in Section A-A.
7. M-20 Allen head screw shall be stainless steel.
8. Gutter shall be placed on the same side as the support plate, 75 mm minimum from the deck plate. Gutter shall be parallel to deck cross slope.
9. For support plate details see "Hinge A Expansion Joint Details No.9" sheet.
10. Values are for mean temperature of 20° C.
11. All the connection hardware shall be supplied with Trelleborg Transflex 2400. The connection of Transflex 2400 and that of the support bar to the blockout concrete shall be drill and bond dowels.

CONTRACT CHANGE ORDER NO. ____
SHEET ____ OF ____

REQUESTS FOR INFORMATION NOT ADDRESSED IN THIS CCO REMAIN IN FORCE

MARK	DATE	DESCRIPTIONS	BY	CH'D	CCO#
2	12/30/10	SEISMIC JOINT MODIFICATIONS HINGE A	CR	MN	25
1	10/22/10	SEISMIC JOINT MODIFICATIONS HINGE A	CR	MN	25
0	07/30/10	SEISMIC JOINT MODIFICATIONS HINGE A	CR	MN	25

REVISIONS

R. Valizadeh/V. Toan/Y.L./W.L./F.C.
DESIGN OVERSIGHT
SIGN OFF DATE 12/30/10

	BY	CHECKED
DESIGN	C. Redfield	M. Nader
DETAILS	H. Patel	M. Benolt
QUANTITIES	H. Patel	J. Duxbury

PREPARED FOR THE STATE OF CALIFORNIA DEPARTMENT OF TRANSPORTATION

R. Manzanarez
PROJECT ENGINEER

ALL DIMENSIONS ARE IN MILLIMETERS UNLESS OTHERWISE SHOWN

BRIDGE NO. 34-0006L/R
KILOMETER POST 13.2/13.9

SAN FRANCISCO OAKLAND BAY BRIDGE
EAST SPAN SEISMIC SAFETY PROJECT
SELF-ANCHORED SUSPENSION BRIDGE
(SUPERSTRUCTURE & TOWER)

HINGE A EXPANSION JOINT DETAILS NO. 4

Rev. Date: 5-18-98

ORIGINAL SCALE IN MILLIMETERS FOR REDUCED PLANS 0 10 20 30 40 50 60 70 80 90 100

CU 04
EA 0120F1

DISREGARD PRINTS BEARING EARLIER REVISION DATES 07/30/10

REVISION DATES (PRELIMINARY STAGE ONLY)

SHEET 447S2R2 OF

FILE -> I:\bb\04-012001\sas\contract plans and cco\cco\cco#25\7-revision 12-30-10\dgn\akjnt01b.dgn

100 % PS&E

USERNAME -> DWinrow DATE PLOTTED -> 30 DEC 2010 TIME PLOTTED -> 13:20:53

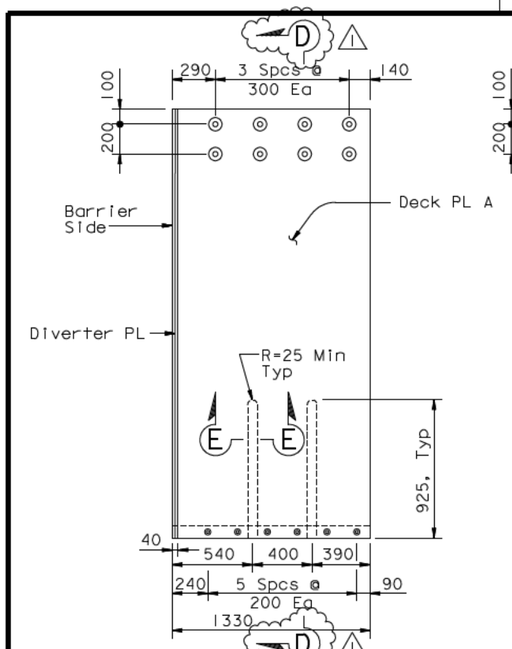

DECK PLATE A
1:20

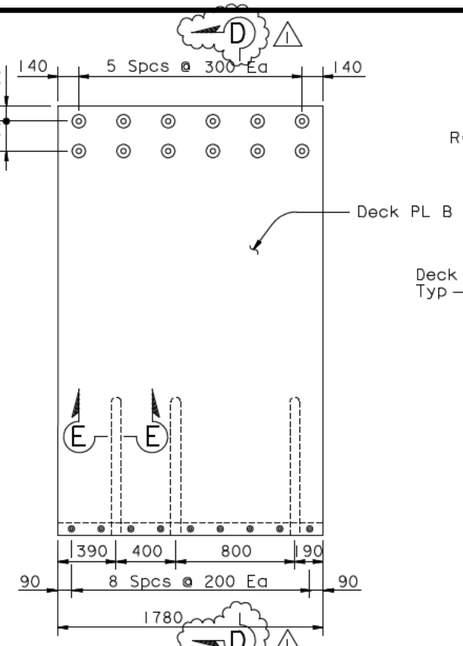

DECK PLATE B
1:20

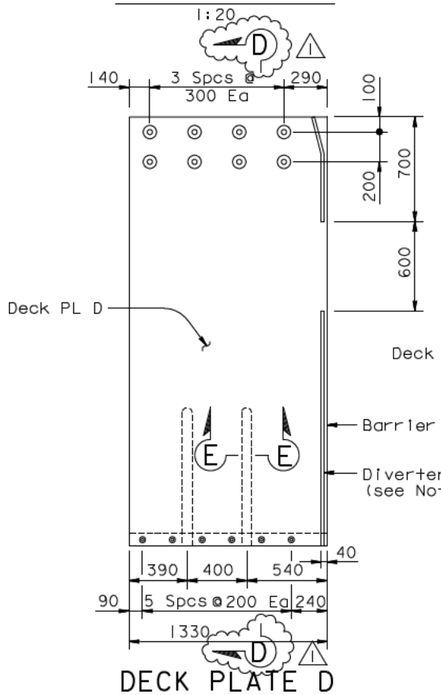

DECK PLATE D
1:20

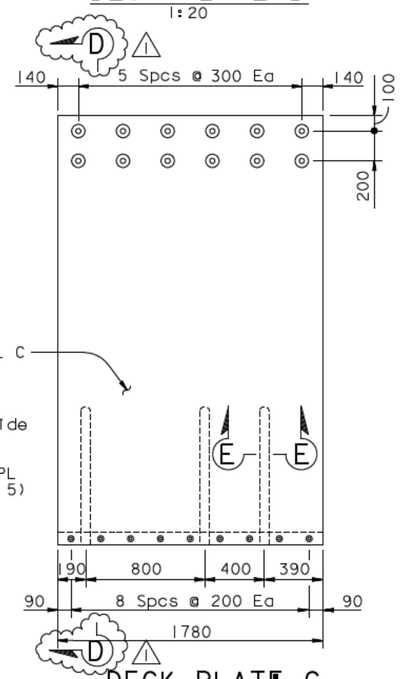

DECK PLATE C
1:20

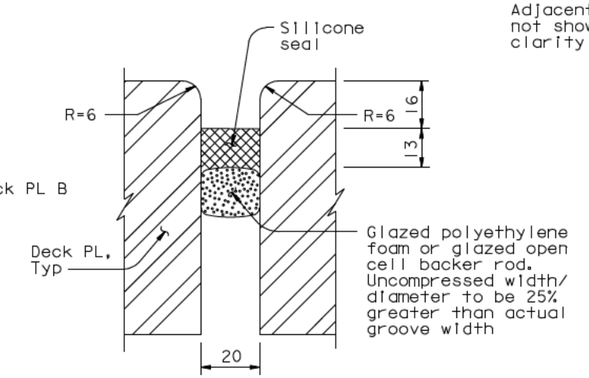

SECTION C-C
1:1

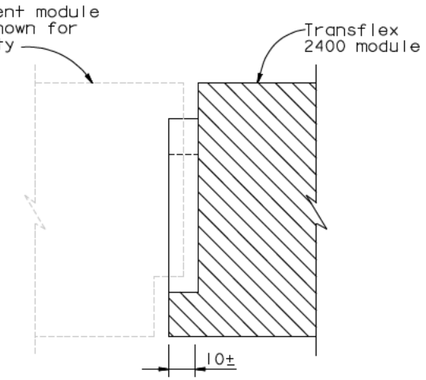

SECTION C'-C'
1:1

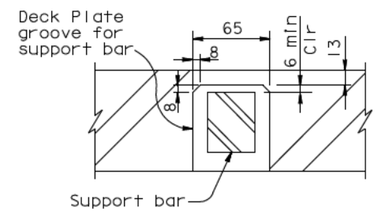

SECTION E-E
1:2.5

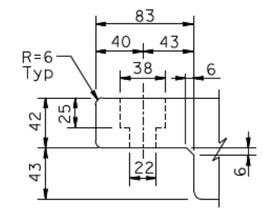

DETAIL E
1:2.5

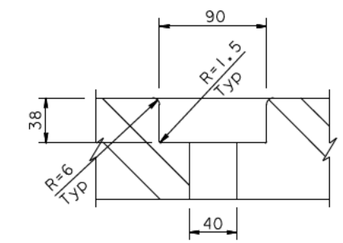

DETAIL F
1:2.5

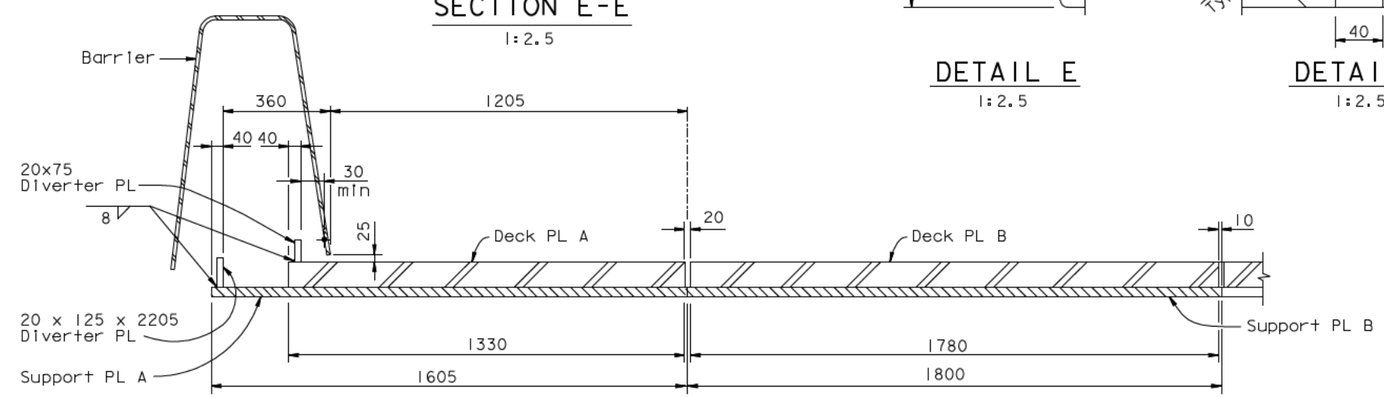

SECTION B-B
1:10

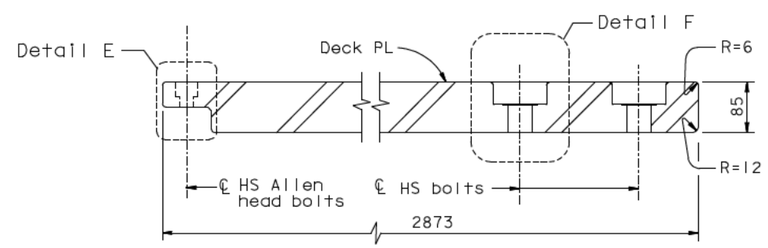

SECTION D-D
1:5

NOTES:

1. For deck plate plan see "Hinge A Expansion Joint Details No.3" sheet.
2. Diverter plate applies to Deck plates A and D and Support plate A only.
3. For bolting of deck plates to channel assembly details, see "Hinge A Expansion Joint Details No. 8" sheet.
4. For connection detail between Trelleborg Transflex 2400 and deck plate see, "Hinge A Expansion Joint Details No. 4" sheet.
5. For diverter plate detail on Deck PL D, see Detail L on "Hinge A Expansion Joint Details No.8" sheet.

DIST.	COUNTY	ROUTE	KILOMETER POST TOTAL PROJECT	SHEET NO.	TOTAL SHEETS
04	SF	80	13.2/13.9	864S3R1	1204

REGISTERED ENGINEER - CIVIL
07-30-10
PLANS APPROVAL DATE
The State of California or its officers or agents shall not be responsible for the accuracy or completeness of electronic copies of this plan sheet.
REGISTERED PROFESSIONAL ENGINEER Marwan N. Nader No. C 054426 Exp. 12/31/11 CIVIL STATE OF CALIFORNIA

T.Y. LIN / MOFFATT & NICHOL
825 BATTERY STREET
SAN FRANCISCO, CA 94111

Caltrans now has a web site! To get to the web site, go to: http://www.dot.ca.gov

CONTRACT CHANGE ORDER NO. ____
SHEET ____ OF ____

REQUESTS FOR INFORMATION NOT ADDRESSED IN THIS CCO REMAIN IN FORCE

R. Valizadeh/V. Toan/Y.L./W.L./F.C.
DESIGN OVERSIGHT
SIGN OFF DATE 12/30/10

MARK	DATE	DESCRIPTIONS	BY	CH'D	CCO#
1	12/30/10	SEISMIC JOINT MODIFICATIONS HINGE A	CR	MN	25
0	07/30/10	SEISMIC JOINT MODIFICATIONS HINGE A	CR	MN	25

REVISIONS

	BY	CHECKED
DESIGN	C. Redfield	M. Nader
DETAILS	H. Patel	M. Benolt
QUANTITIES	H. Patel	J. Duxbury

PREPARED FOR THE STATE OF CALIFORNIA DEPARTMENT OF TRANSPORTATION

R. Manzanarez
PROJECT ENGINEER

BRIDGE NO. 34-0006L/R
KILOMETER POST 13.2/13.9

ALL DIMENSIONS ARE IN MILLIMETERS UNLESS OTHERWISE SHOWN

SAN FRANCISCO OAKLAND BAY BRIDGE
EAST SPAN SEISMIC SAFETY PROJECT
SELF-ANCHORED SUSPENSION BRIDGE
(SUPERSTRUCTURE & TOWER)

HINGE A EXPANSION JOINT DETAILS NO.5

Rev. Date: 5-18-98

ORIGINAL SCALE IN MILLIMETERS FOR REDUCED PLANS 0 10 20 30 40 50 60 70 80 90 100

CU 04
EA 0120F1

DISREGARD PRINTS BEARING EARLIER REVISION DATES 07/30/10

REVISION DATES (PRELIMINARY STAGE ONLY)

SHEET 447S3R1 OF

FILE -> I:\bb\04-01200I\sas\contract plans and cco\cco\cco#25\7-revision 12-30-10\dgn\akjnt01c.dgn

100 % PS&E

USERNAME -> DWinrow DATE PLOTTED -> 30 DEC 2010 TIME PLOTTED -> 13:21:49

DIST	COUNTY	ROUTE	KILOMETER POST TOTAL PROJECT	SHEET No	TOTAL SHEETS
04	SF	80	13.2/13.9	864S4R1	1204

REGISTERED CIVIL ENGINEER DATE

07-30-10
PLANS APPROVAL DATE

REGISTERED PROFESSIONAL ENGINEER Enrico G. Maggenti No. 46920 Exp. 6/30/11 CIVIL STATE OF CALIFORNIA

The State of California or its officers or agents shall not be responsible for the accuracy or completeness of electronic copies of this plan sheet.

Caltrans now has a web site! To get to the web site, go to: http://www.dot.ca.gov

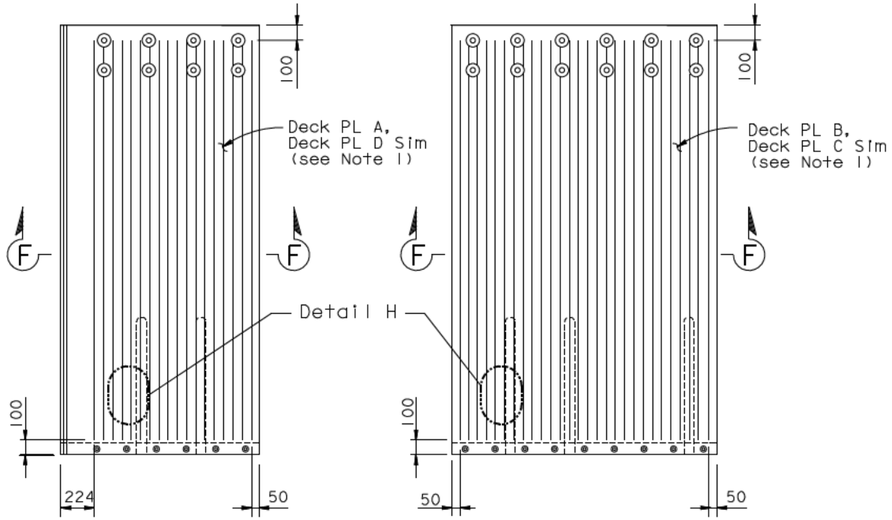

DECK PLATE A/D
(Deck PL A Shown, Deck PL D Similar)

DECK PLATE B/C
(Deck PL B Shown, Deck PL C Similar)

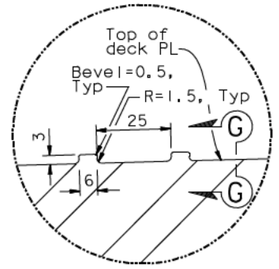

DETAIL G
1:1

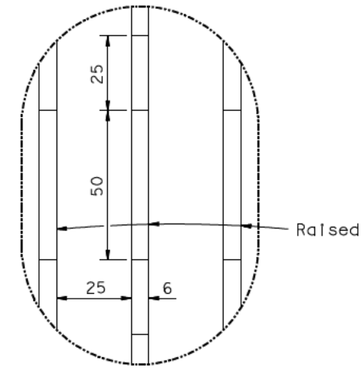

DETAIL H
1:1

FRICTION PATTERN (See Note 2) △1
1:20

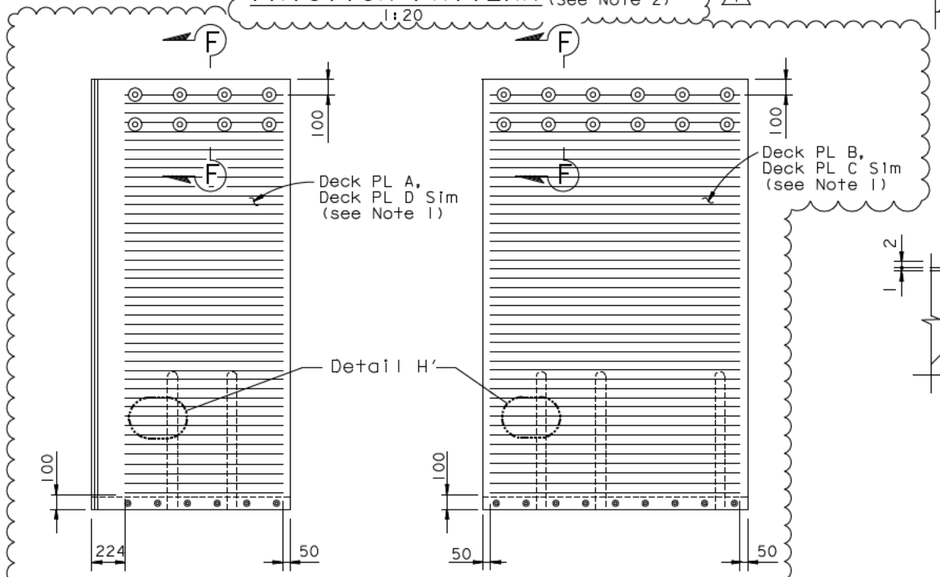

DECK PLATE A/D
(Deck PL A Shown, Deck PL D Similar)

DECK PLATE B/C
(Deck PL B Shown, Deck PL C Similar)

ALT FRICTION PATTERN (See Note 2) △1
1:20

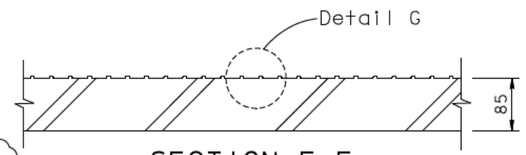

SECTION F-F
1:5

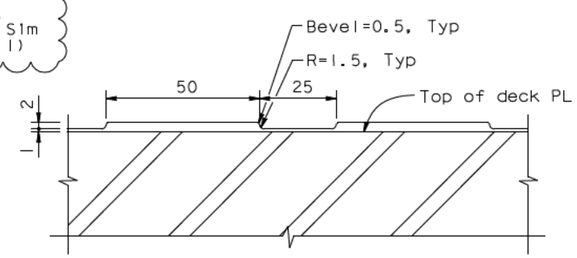

SECTION G-G
1:1

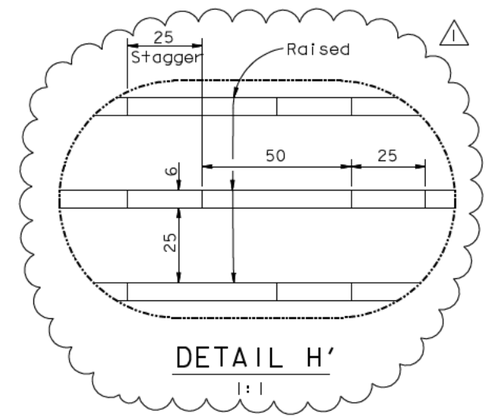

DETAIL H'
1:1

CONTRACT CHANGE ORDER NO. _____
SHEET ____ OF ____

REQUESTS FOR INFORMATION NOT ADDRESSED IN THIS CCO REMAIN IN FORCE

NOTES:

1. For Details not shown, see "Hinge A Expansion Joint Details No.5" sheet.
2. △1 Friction pattern type shall be selected as directed by the Engineer. Polymer/Aggregate Skid Coat (PASC) may be applied per Engineer's direction.

SAN FRANCISCO OAKLAND BAY BRIDGE
EAST SPAN SEISMIC SAFETY PROJECT

SELF-ANCHORED SUSPENSION BRIDGE
(SUPERSTRUCTURE & TOWER)

SEISMIC JOINT (HINGE A)

HINGE A EXPANSION JOINT DETAILS NO. 6

Caltrans Metric

MARK	DATE	DESCRIPTIONS	BY	CH'D	CCO#
△1	12/30/10	SEISMIC JOINT MODIFICATIONS HINGE A	RM	AA	25
△0	07/30/10	SEISMIC JOINT MODIFICATIONS HINGE A	RM	AA	25

REVISIONS

	BY	CHECKED
DESIGN	R MAGGENTI	A AKINSANYA
DETAILS	R MAGGENTI	A AKINSANYA
QUANTITIES	R MAGGENTI	A AKINSANYA

STATE OF CALIFORNIA
DEPARTMENT OF TRANSPORTATION

DIVISION OF ENGINEERING SERVICES
STRUCTURE DESIGN
SPECIAL DESIGNS BRANCH

BRIDGE NO. 34-0006 L/R
KILOMETER POST 13.2/13.9

ALL DIMENSIONS ARE IN MILLIMETERS UNLESS OTHERWISE SHOWN

ORIGINAL SCALE IN MILLIMETERS FOR REDUCED PLANS 0 10 20 30 40 50 60 70 80 90 100

CU 04
EA 0120F1

DISREGARD PRINTS BEARING EARLIER REVISION DATES 07/30/10

REVISION DATES

SHEET 447S4R1 OF

FILE => spec_des_br_proj/04-0120F1/1:\bb\04-012001\sds\contrdct plans and cco\cco\cco#25\7-revision 12-30-10\dgn\dkjnt01d.dgn

USERNAME => DWinrow DATE PLOTTED => 30 DEC 2010 TIME PLOTTED => 13:23:03

DIST.	COUNTY	ROUTE	KILOMETER POST TOTAL PROJECT	SHEET NO.	TOTAL SHEETS
04	SF	80	13.2/13.9	864S5R1	1204

REGISTERED ENGINEER - CIVIL

07-30-10
PLANS APPROVAL DATE

REGISTERED PROFESSIONAL ENGINEER Marwan N. Nader No. C 054426 Exp. 12/31/11 CIVIL STATE OF CALIFORNIA

The State of California or its officers or agents shall not be responsible for the accuracy or completeness of electronic copies of this plan sheet.

T.Y. LIN / MOFFATT & NICHOL
825 BATTERY STREET
SAN FRANCISCO, CA 94111

Caltrans now has a web site! To get to the web site, go to: http://www.dot.ca.gov

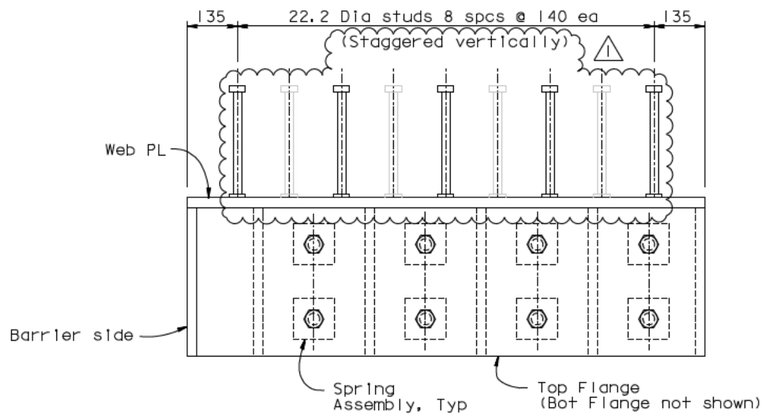

PLAN - BUILT UP CHANNEL ASSEMBLY "A"

NTS

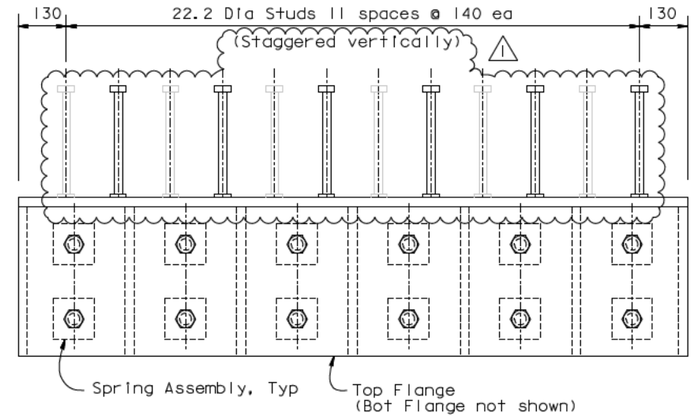

PLAN - BUILT UP CHANNEL ASSEMBLY "B"

NTS

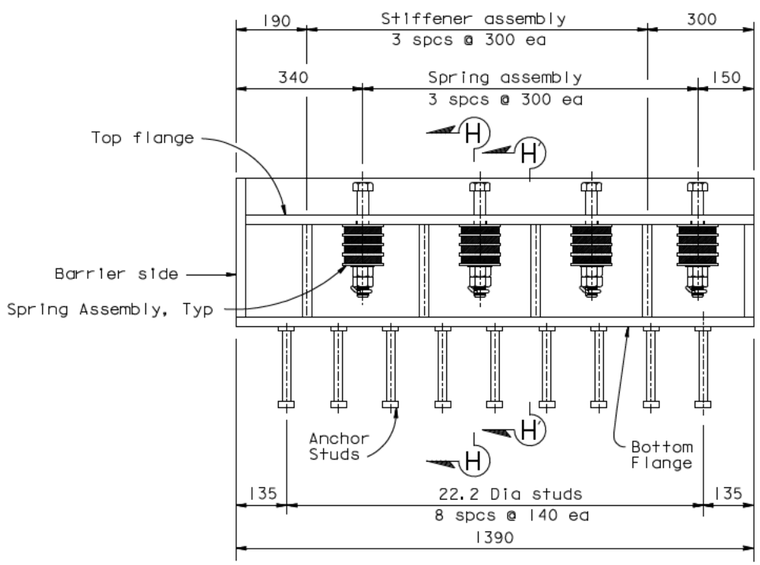

ELEVATION - BUILT UP CHANNEL ASSEMBLY "A"

NTS

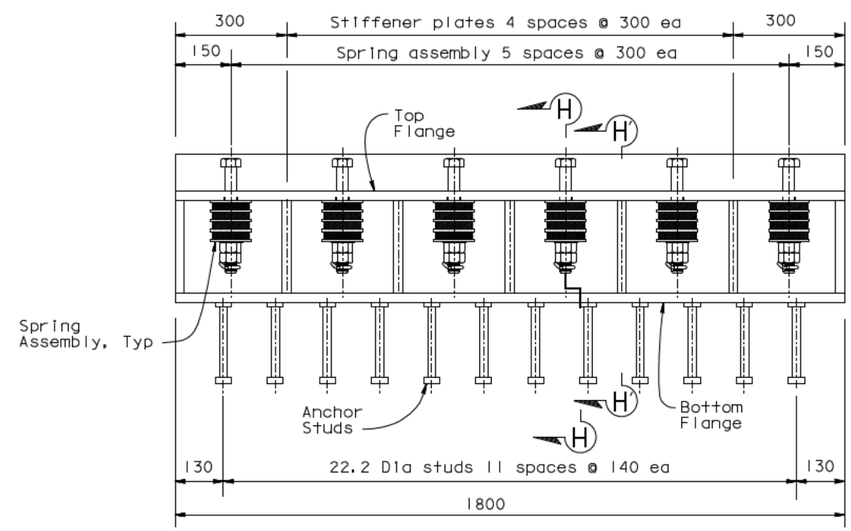

ELEVATION - BUILT UP CHANNEL ASSEMBLY "B"

NTS

NOTES:

1. For Sections H-H and H'-H', see "Hinge A Expansion Joint Details No. 8" sheet.

CONTRACT CHANGE ORDER NO. ____
SHEET ____ OF ____

REQUESTS FOR INFORMATION NOT ADDRESSED IN THIS CCO REMAIN IN FORCE

ALL DIMENSIONS ARE IN MILLIMETERS UNLESS OTHERWISE SHOWN

R. Vallizadeh/V. Toan/Y.L./W.L./F.C.
DESIGN OVERSIGHT
Ryan Vallizadeh / Vong Toan / Y. Liu
SIGN OFF DATE 12/30/10

MARK	DATE	DESCRIPTIONS	BY	CH'D	CCO#
1	12/30/10	SEISMIC JOINT MODIFICATIONS HINGE A	CR	MN	25
0	07/30/10	SEISMIC JOINT MODIFICATIONS HINGE A	CR	MN	25

REVISIONS

DESIGN	BY C. Redfield	CHECKED M. Nader	
DETAILS	BY H. Patel	CHECKED M. Benoit	
QUANTITIES	BY H. Patel	CHECKED J. Duxbury	

PREPARED FOR THE STATE OF CALIFORNIA DEPARTMENT OF TRANSPORTATION

R. Manzanarez
PROJECT ENGINEER

BRIDGE NO. 34-0006L/R
KILOMETER POST 13.2/13.9

SAN FRANCISCO OAKLAND BAY BRIDGE
EAST SPAN SEISMIC SAFETY PROJECT
SELF-ANCHORED SUSPENSION BRIDGE
(SUPERSTRUCTURE & TOWER)

HINGE A EXPANSION JOINT DETAILS NO. 7

Rev. Date: 5-18-98

ORIGINAL SCALE IN MILLIMETERS FOR REDUCED PLANS 0 10 20 30 40 50 60 70 80 90 100

CU 04
EA 0120F1

DISREGARD PRINTS BEARING EARLIER REVISION DATES 07/30/10

REVISION DATES (PRELIMINARY STAGE ONLY)

SHEET 447S5R1 OF

FILE -> I:\bb\04-012001\sas\contract plans and cco\cco\cco#25\7-revision 12-30-10\dgn\akjntole.dgn

100 % PS&E

USERNAME -> DWinrow DATE PLOTTED -> 30 DEC 2010 TIME PLOTTED -> 13:23:39

DIST.	COUNTY	ROUTE	KILOMETER POST TOTAL PROJECT	SHEET NO.	TOTAL SHEETS
04	SF	80	13.2/13.9	864S6R2	1204

REGISTERED ENGINEER - CIVIL

07-30-10
PLANS APPROVAL DATE

The State of California or its officers or agents shall not be responsible for the accuracy or completeness of electronic copies of this plan sheet.

REGISTERED PROFESSIONAL ENGINEER Marwan N. Nader No. C 054426 Exp. 12/31/11 CIVIL STATE OF CALIFORNIA

T.Y. LIN / MOFFATT & NICHOL
825 BATTERY STREET
SAN FRANCISCO, CA 94111

Caltrans now has a web site! To get to the web site, go to: http://www.dot.ca.gov

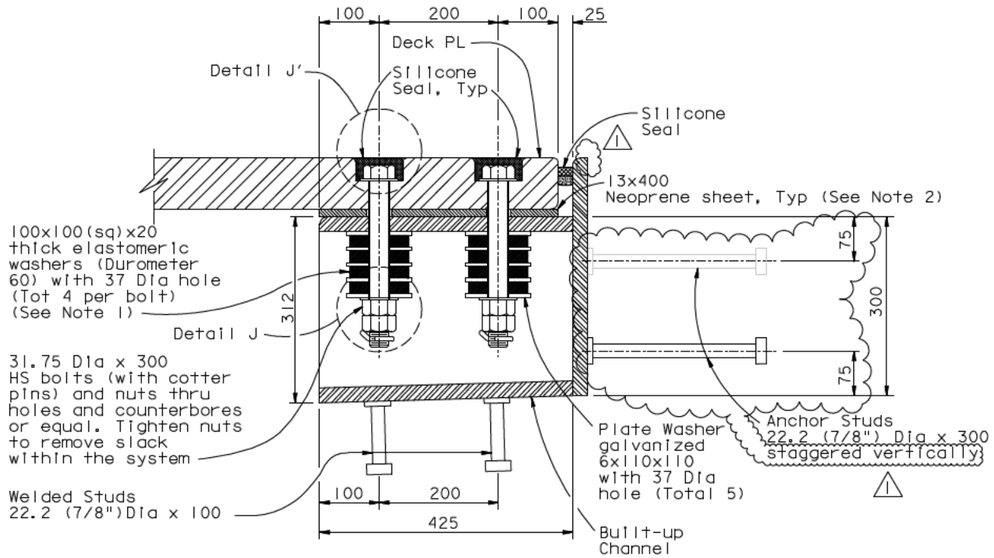

SECTION H-H
NTS

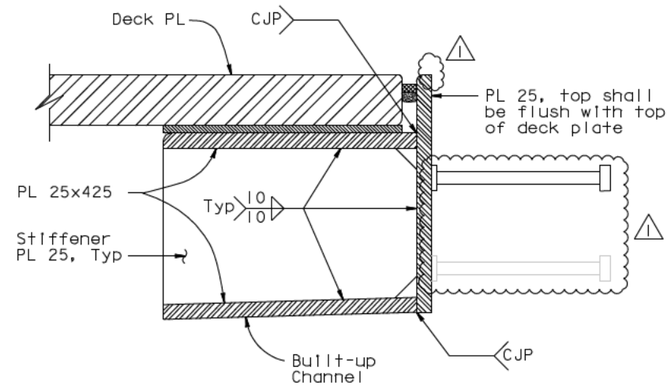

SECTION H'-H'
NTS

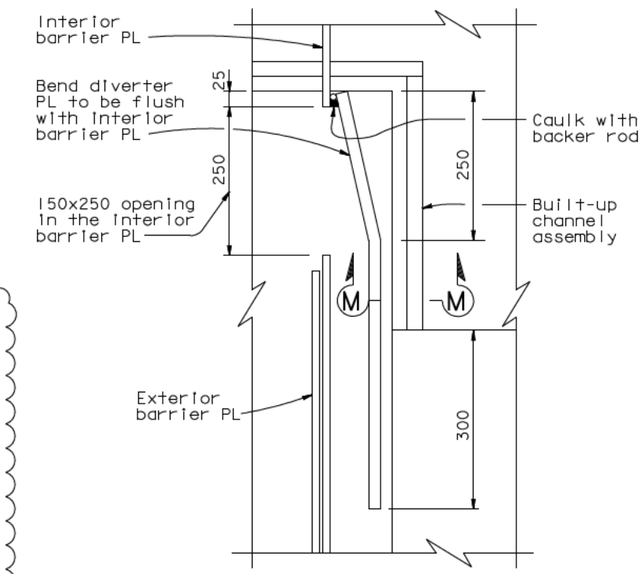

DETAIL L
1:5

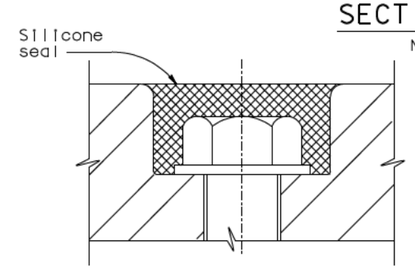

DETAIL J'
NTS

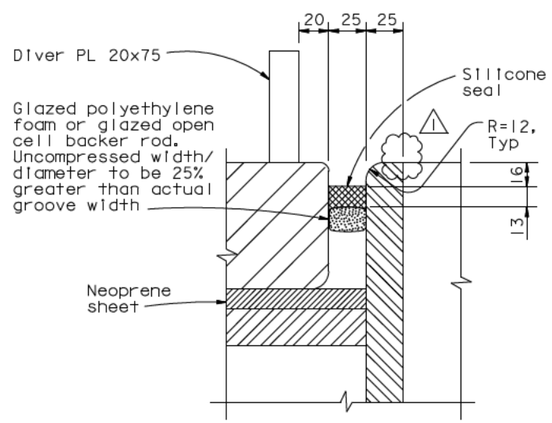

SECTION M-M
NTS

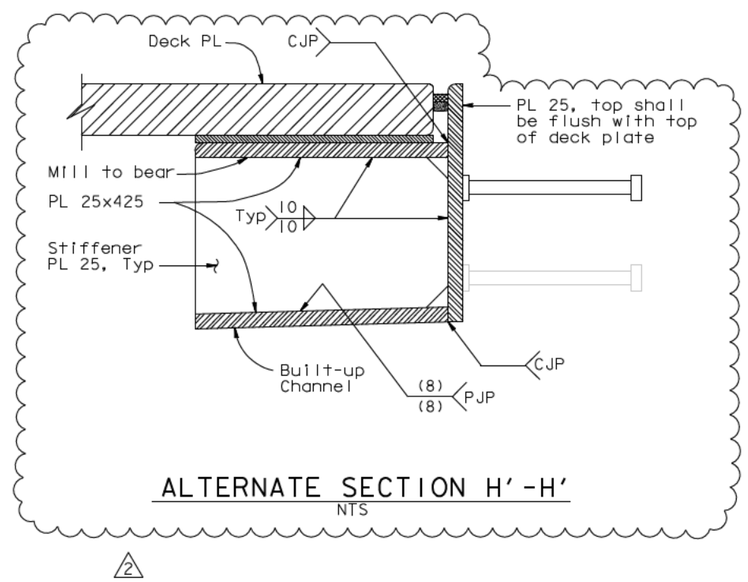

ALTERNATE SECTION H'-H'
NTS

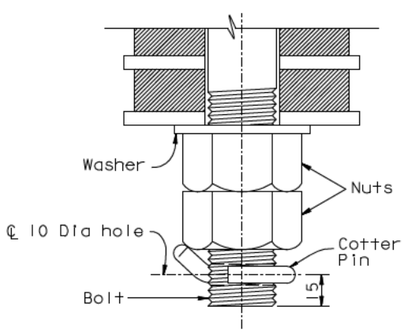

DETAIL J
NTS

NOTES:

1. Elastomeric washers shall be plain neoprene.
2. The length of the 13x400 mm neoprene sheet below the deck plate is 1365 mm and 1800 mm long for modules "A" and "B" respectively.

CONTRACT CHANGE ORDER NO.
SHEET ____ OF ____

REQUESTS FOR INFORMATION NOT ADDRESSED IN THIS CCO REMAIN IN FORCE

MARK	DATE	DESCRIPTIONS	BY	CH'D	CCO#
2	08/05/11	SEISMIC JOINT MODIFICATIONS HINGE A	CR	MN	25
1	12/30/10	SEISMIC JOINT MODIFICATIONS HINGE A	CR	MN	25
0	07/30/10	SEISMIC JOINT MODIFICATIONS HINGE A	CR	MN	25

REVISIONS

R. Valizadeh/V. Toan/Y.L./W.L./F.C.
DESIGN OVERSIGHT
SIGN OFF DATE 08/09/11

	BY	CHECKED
DESIGN	C. Redfield	M. Nader
DETAILS	H. Patel	M. Benolt
QUANTITIES	H. Patel	J. Duxbury

PREPARED FOR THE STATE OF CALIFORNIA DEPARTMENT OF TRANSPORTATION

R. Manzanarez
PROJECT ENGINEER

ALL DIMENSIONS ARE IN MILLIMETERS UNLESS OTHERWISE SHOWN

BRIDGE NO. 34-0006L/R
KILOMETER POST 13.2/13.9

SAN FRANCISCO OAKLAND BAY BRIDGE
EAST SPAN SEISMIC SAFETY PROJECT
SELF-ANCHORED SUSPENSION BRIDGE
(SUPERSTRUCTURE & TOWER)

HINGE A EXPANSION JOINT DETAILS NO. 8

Rev. Date: 5-18-98

ORIGINAL SCALE IN MILLIMETERS FOR REDUCED PLANS 0 10 20 30 40 50 60 70 80 90 100

CU 04
EA 0120F1

DISREGARD PRINTS BEARING EARLIER REVISION DATES 07/30/10

REVISION DATES (PRELIMINARY STAGE ONLY)

SHEET 447S6R2 OF

FILE -> I:\bb\04-012001\sas\contract plans and cco\cco\cco#25\9-revision 08-05-11\dgn\akjnt01f.dgn

100 % PS&E

USERNAME -> DWinrow DATE PLOTTED -> 05 AUG 2011 TIME PLOTTED -> 15:13:21

DIST.	COUNTY	ROUTE	KILOMETER POST TOTAL PROJECT	SHEET NO.	TOTAL SHEETS
04	SF	80	13.2/13.9	864STRI	1204

REGISTERED ENGINEER - CIVIL

07-30-10

PLANS APPROVAL DATE

The State of California or its officers or agents shall not be responsible for the accuracy or completeness of electronic copies of this plan sheet.

REGISTERED PROFESSIONAL ENGINEER Marwan N. Nader No. C 054426 Exp. 12/31/11 CIVIL STATE OF CALIFORNIA

T.Y. LIN / MOFFATT & NICHOL
825 BATTERY STREET
SAN FRANCISCO, CA 94111

Caltrans now has a web site! To get to the web site, go to: http://www.dot.ca.gov

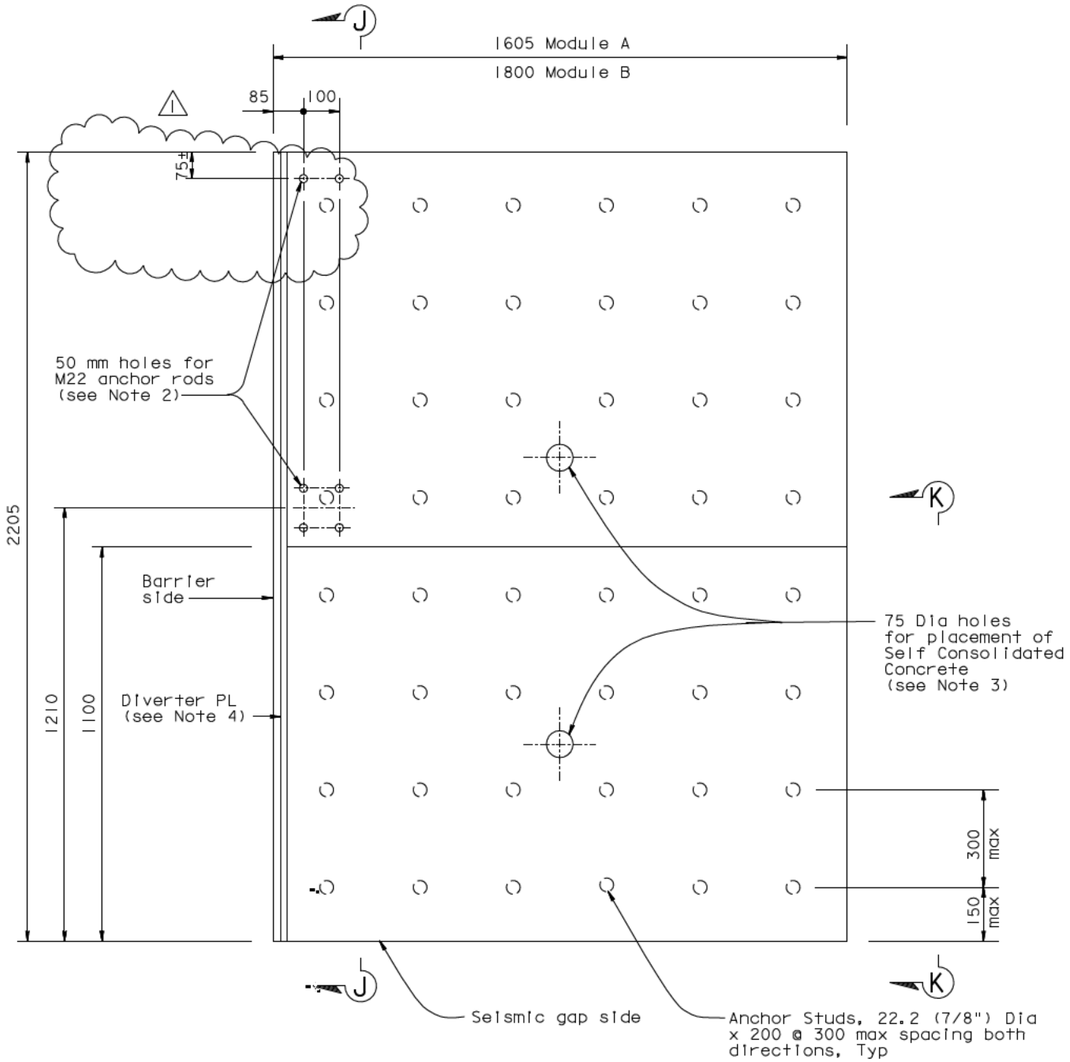

PLAN-SUPPORT PLATE
NTS

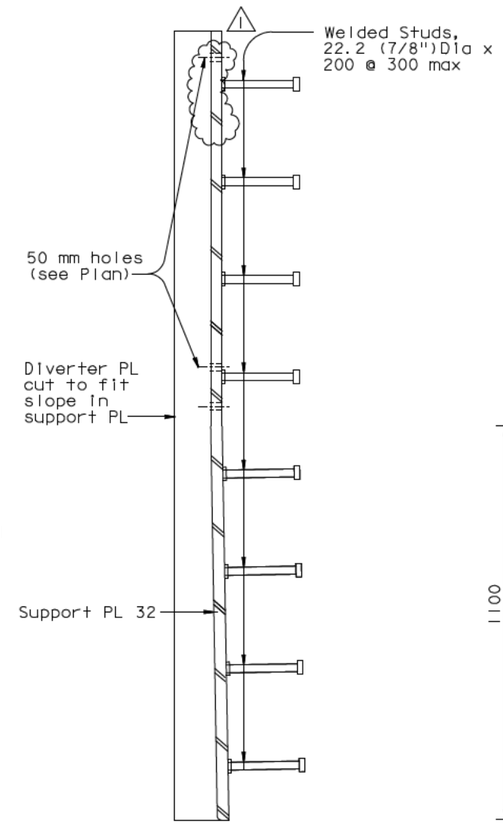

SECTION J-J
NTS

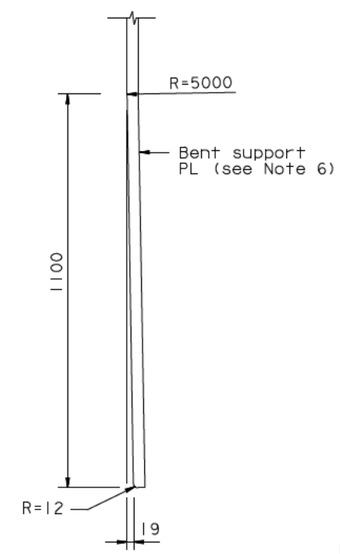

SECTION K-K
NTS

NOTES:

1. Support Plate A shown, Support Plate B similar.
2. Install anchor rod holes in support plate Module A at barrier side only as indicated. Coordinate anchor rod holes to align with those in the barrier.
3. Exact location of 75 Dia holes to be determined prior to support plate fabrication.
4. For diverter plate details see "Hinge A Expansion Joint Details No.5" sheet. Diverter plate applies only to support PL A.
5. Anchor holes for Trelleborg Transflex 2400 and Trelleborg Support Bar connection not shown. Coordinate anchor hole location with Transflex modules.
6. At the Contractor's option, the support plate may be machined in lieu of bending.

100 % PS&E

CONTRACT CHANGE ORDER NO. _____
SHEET ____ OF ____

REQUESTS FOR INFORMATION NOT ADDRESSED IN THIS CCO REMAIN IN FORCE

ALL DIMENSIONS ARE IN MILLIMETERS UNLESS OTHERWISE SHOWN

R. Vallizadeh/V. Toan/Y.L./W.L./F.C.
DESIGN OVERSIGHT
SIGN OFF DATE 10/22/10

MARK	DATE	DESCRIPTIONS	BY	CH'D	CCO#
1	10/22/10	SEISMIC JOINT MODIFICATIONS HINGE A	CR	MN	25
0	07/30/10	SEISMIC JOINT MODIFICATIONS HINGE A	CR	MN	25

REVISIONS

DESIGN	BY C. Redfield	CHECKED M. Nader	
DETAILS	BY H. Patel	CHECKED M. Benoit	
QUANTITIES	BY H. Patel	CHECKED J. Duxbury	

PREPARED FOR THE STATE OF CALIFORNIA DEPARTMENT OF TRANSPORTATION

R. Manzanarez
PROJECT ENGINEER

BRIDGE NO. 34-0006L/R
KILOMETER POST 13.2/13.9

SAN FRANCISCO OAKLAND BAY BRIDGE
EAST SPAN SEISMIC SAFETY PROJECT
SELF-ANCHORED SUSPENSION BRIDGE
(SUPERSTRUCTURE & TOWER)

HINGE A EXPANSION JOINT DETAILS NO.9

Rev. Date: 5-18-98

ORIGINAL SCALE IN MILLIMETERS FOR REDUCED PLANS 0 10 20 30 40 50 60 70 80 90 100

CU 04
EA 0120F1

DISREGARD PRINTS BEARING EARLIER REVISION DATES 07/30/10

REVISION DATES (PRELIMINARY STAGE ONLY)

SHEET 447STRI OF

FILE -> I:\bb\04-012001\sas\contract plans and cco\cco\cco#25\6-revision 10-22-10\dgn\akjnt01g.dgn

USERNAME -> arivera DATE PLOTTED -> 22 OCT 2010 TIME PLOTTED -> 13:44:05

DIST.	COUNTY	ROUTE	KILOMETER POST TOTAL PROJECT	SHEET NO.	TOTAL SHEETS
04	SF	80	13.2/13.9	864S8R1	1204

REGISTERED ENGINEER - CIVIL

07-30-10

PLANS APPROVAL DATE

The State of California or its officers or agents shall not be responsible for the accuracy or completeness of electronic copies of this plan sheet.

REGISTERED PROFESSIONAL ENGINEER Marwan N. Nader No. C 054426 Exp. 12/31/11 CIVIL STATE OF CALIFORNIA

T.Y. LIN / MOFFATT & NICHOL
825 BATTERY STREET
SAN FRANCISCO, CA 94111

Caltrans now has a web site! To get to the web site, go to: http://www.dot.ca.gov

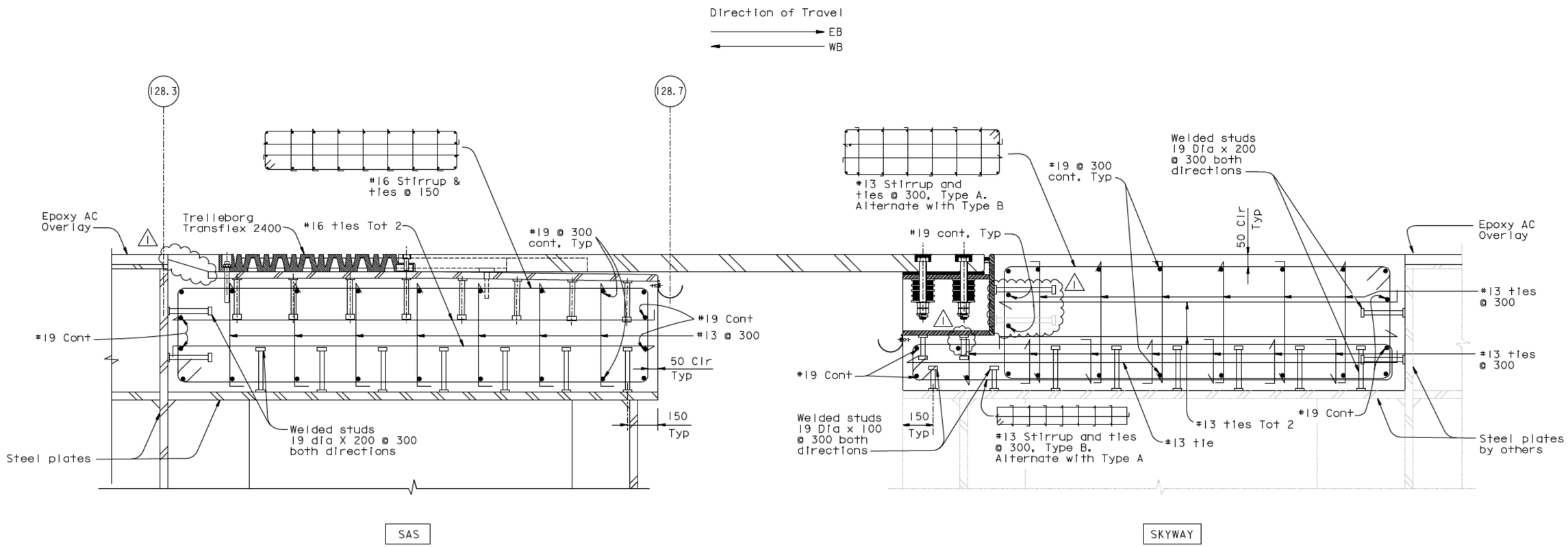

BLOCK OUT REINFORCEMENT DETAIL

1:10

CONTRACT CHANGE ORDER NO. _____
SHEET ____ OF ____

REQUESTS FOR INFORMATION NOT ADDRESSED IN THIS CCO REMAIN IN FORCE

ALL DIMENSIONS ARE IN MILLIMETERS UNLESS OTHERWISE SHOWN

R. Valizadeh/V. Toan/Y.L./W.L./F.C.
DESIGN OVERSIGHT
SIGN OFF DATE 01/04/11

MARK	DATE	DESCRIPTIONS	BY	CH'D	CCO#
1	01/04/11	SEISMIC JOINT MODIFICATIONS HINGE A	CR	MN	25
0	07/30/10	SEISMIC JOINT MODIFICATIONS HINGE A	CR	MN	25

REVISIONS

DESIGN	BY C. Redfield	CHECKED M. Nader	
DETAILS	BY H. Patel	CHECKED M. Benoit	
QUANTITIES	BY H. Patel	CHECKED J. Duxbury	

PREPARED FOR THE STATE OF CALIFORNIA DEPARTMENT OF TRANSPORTATION

R. Manzanarez
PROJECT ENGINEER

BRIDGE NO. 34-0006L/R
KILOMETER POST 13.2/13.9

SAN FRANCISCO OAKLAND BAY BRIDGE
EAST SPAN SEISMIC SAFETY PROJECT
SELF-ANCHORED SUSPENSION BRIDGE
(SUPERSTRUCTURE & TOWER)

HINGE A EXPANSION JOINT DETAILS NO. 10

Rev. Date: 5-18-98

ORIGINAL SCALE IN MILLIMETERS FOR REDUCED PLANS 0 10 20 30 40 50 60 70 80 90 100

CU 04
EA 0120F1

DISREGARD PRINTS BEARING EARLIER REVISION DATES 07/30/10

REVISION DATES (PRELIMINARY STAGE ONLY)

SHEET 447S8R1 OF

FILE -> L:\BB\04-012001\SAS\Contract Plans and CCO\CCO\CCO#25\8-Update 01-04-11\DGN\akjnt01h.dgn

100 % PS&E

USERNAME -> arivera DATE PLOTTED -> 04 JAN 2011 TIME PLOTTED -> 11:57:03

DIST.	COUNTY	ROUTE	KILOMETER POST TOTAL PROJECT	SHEET NO.	TOTAL SHEETS
04	SF	80	13.2/13.9	864S9	1204

REGISTERED ENGINEER - CIVIL

10-22-10
PLANS APPROVAL DATE

REGISTERED PROFESSIONAL ENGINEER Marwan N. Nader No. C 054426 Exp. 12/31/11 CIVIL STATE OF CALIFORNIA

The State of California or its officers or agents shall not be responsible for the accuracy or completeness of electronic copies of this plan sheet.

T.Y. LIN / MOFFATT & NICHOL
825 BATTERY STREET
SAN FRANCISCO, CA 94111

Caltrans now has a web site! To get to the web site, go to: http://www.dot.ca.gov

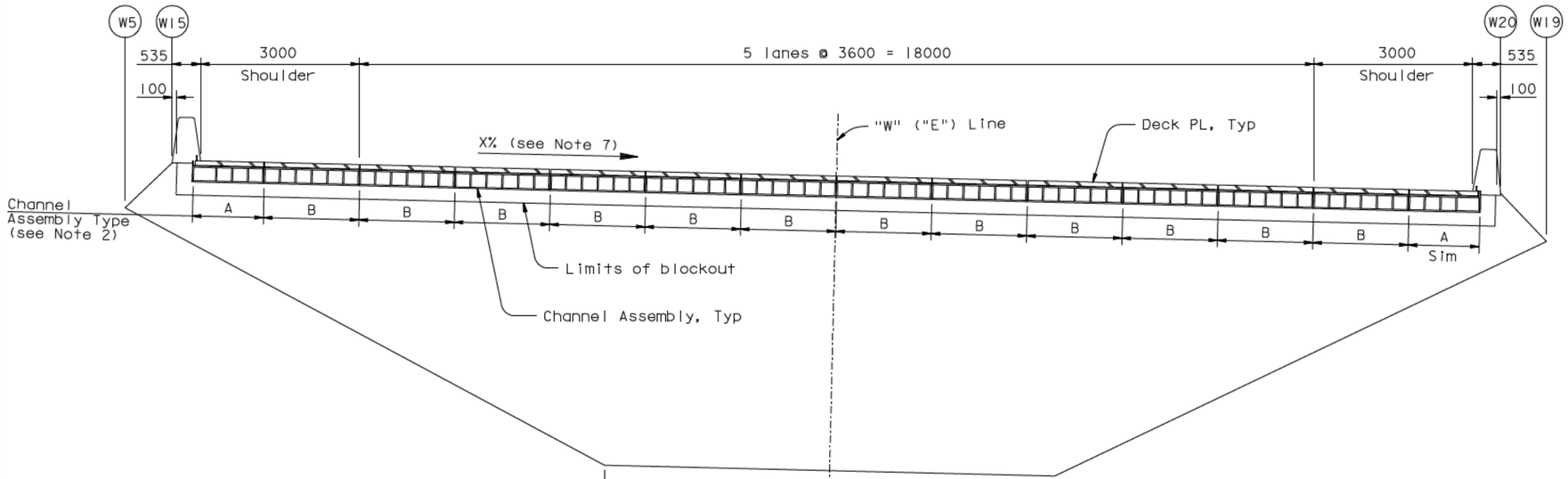

ALTERNATIVE ELEVATION

1:50
(Westbound Shown, Eastbound Similar)
(Elevation View Looking East)

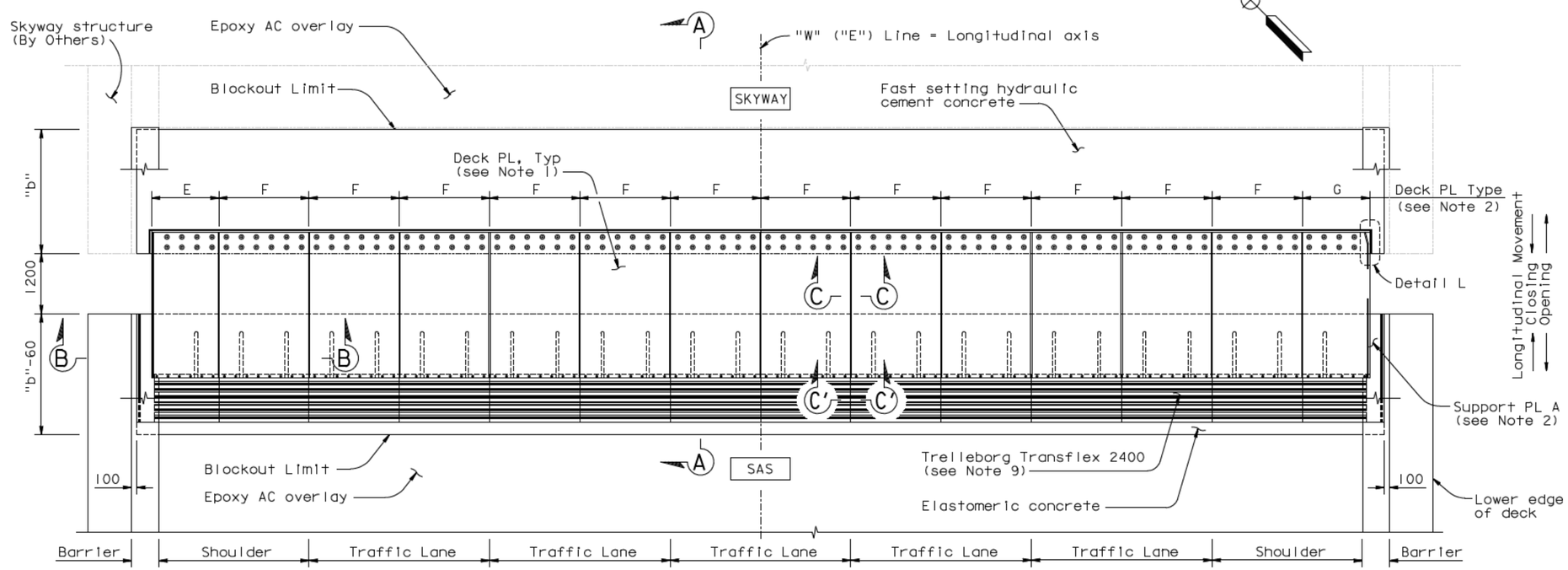

ALTERNATIVE PLAN-EXPANSION JOINT

1:50
(Westbound Shown, Eastbound Similar)

NOTES:

1. For Deck Plates E, F and G, see "Hinge A Expansion Joint Details No.12" sheet. For Deck Plate friction groove pattern, see "Hinge A Expansion Joint Details No.13" sheet.
2. Deck Plate E and G matches with Support Plate A and the Channel Assembly A (Module A). Deck Plate F matches with Support Plate B and the Channel Assembly B (Module B). For details, see "Hinge A Expansion Joint Details No.5", "Hinge A Expansion Joint Details No.7" and "Hinge A Expansion Joint Details No.12" sheets.
3. One module "B" is placed per half traffic lane.
4. Portions of barriers are not shown for clarity. For barrier details at expansion joint, see "Barrier Details" sheets.
5. For Section A-A & related notes, see "Hinge A Expansion Joint Details No.4" sheet.
6. For Section B-B, Section C-C & Section C'-C', see "Hinge A Expansion Joint Details No.5" sheet.
7. For cross slope, see "Barrier Details No.5" sheet.
8. For Detail L, see "Hinge A Expansion Joint Details No.8" sheet.
9. The expansion joint shall be 1800 wide Transflex 2400 module with movement rating of 600. The joint between the Transflex modules shall be water tight.
10. For general notes, see "General Notes" sheets.

CONTRACT CHANGE ORDER NO. _____
SHEET ____ OF ____

REQUESTS FOR INFORMATION NOT ADDRESSED IN THIS CCO REMAIN IN FORCE

ALL DIMENSIONS ARE IN MILLIMETERS UNLESS OTHERWISE SHOWN

R. Valizadeh/V. Toan/Y.L./W.L./F.C.
DESIGN OVERSIGHT
SIGN OFF DATE 10/22/10

MARK	DATE	DESCRIPTIONS	BY	CH'D	CCO#
0	10/22/10	SEISMIC JOINT MODIFICATIONS HINGE A	CR	MN	25

REVISIONS

DESIGN	BY	C. Redfield	CHECKED	M. Nader
DETAILS	BY	H. Patel	CHECKED	M. Benolt
QUANTITIES	BY	H. Patel	CHECKED	J. Duxbury

PREPARED FOR THE STATE OF CALIFORNIA DEPARTMENT OF TRANSPORTATION

R. Manzanarez
PROJECT ENGINEER

BRIDGE NO. 34-0006L/R
KILOMETER POST 13.2/13.9

SAN FRANCISCO OAKLAND BAY BRIDGE
EAST SPAN SEISMIC SAFETY PROJECT
SELF-ANCHORED SUSPENSION BRIDGE
(SUPERSTRUCTURE & TOWER)

HINGE A EXPANSION JOINT DETAILS NO.11

Rev. Date: 5-18-98

ORIGINAL SCALE IN MILLIMETERS FOR REDUCED PLANS 0 10 20 30 40 50 60 70 80 90 100

CU 04
EA 0120F1

DISREGARD PRINTS BEARING EARLIER REVISION DATES 10/22/10

REVISION DATES (PRELIMINARY STAGE ONLY)

SHEET 447S9 OF

FILE -> I:\bb\04-012001\sas\contract plans and cco\cco\cco#25\6-revision 10-22-10\dgn\akjnt01j.dgn

USERNAME -> arivera DATE PLOTTED -> 22 OCT 2010 TIME PLOTTED -> 13:46:16

100% PS&E

DIST.	COUNTY	ROUTE	KILOMETER POST TOTAL PROJECT	SHEET NO.	TOTAL SHEETS
04	SF	80	13.2/13.9	864S10	1204

REGISTERED ENGINEER - CIVIL

10-22-10

PLANS APPROVAL DATE

The State of California or its officers or agents shall not be responsible for the accuracy or completeness of electronic copies of this plan sheet.

REGISTERED PROFESSIONAL ENGINEER Marwan N. Nader No. C 054426 Exp. 12/31/11 CIVIL STATE OF CALIFORNIA

T.Y. LIN / MOFFATT & NICHOL
825 BATTERY STREET
SAN FRANCISCO, CA 94111

Caltrans now has a web site! To get to the web site, go to: http://www.dot.ca.gov

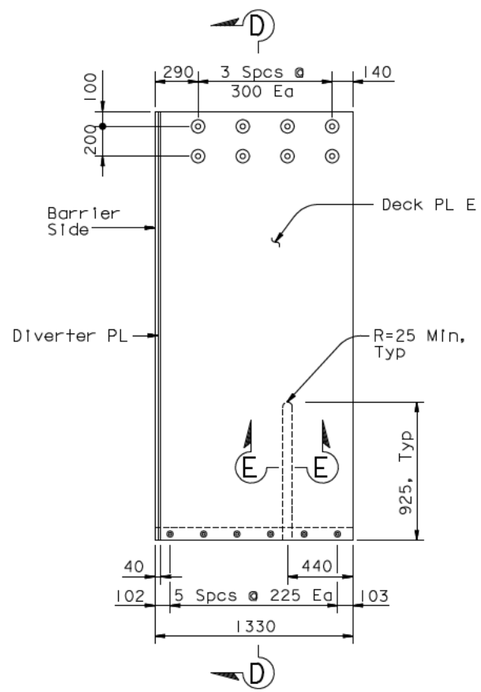

DECK PLATE E
1:20

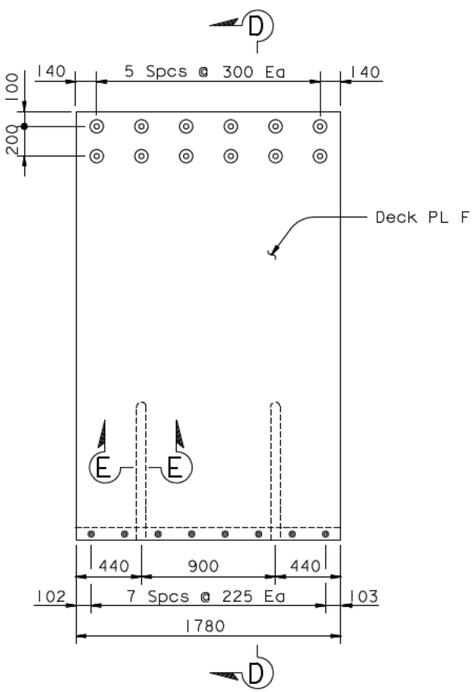

DECK PLATE F
1:20

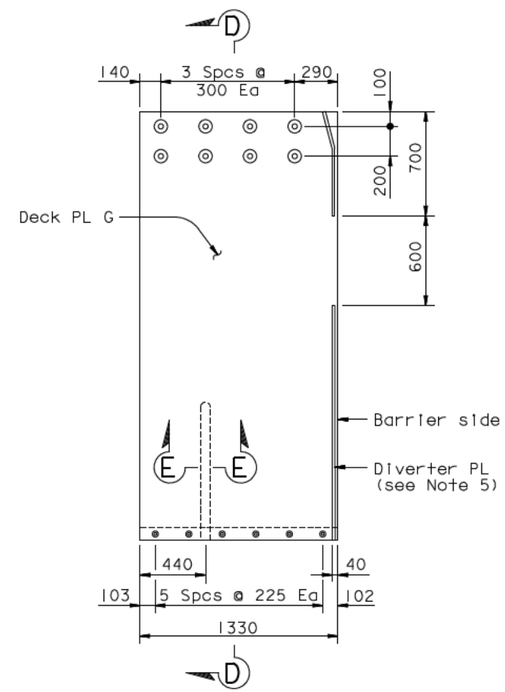

DECK PLATE G
1:20

NOTES:

1. For deck plate alternative plan see "Hinge A Expansion Joint Details No.11" sheet.
2. Diverter plate applies to Deck plates E and G only.
3. For bolting of deck plates to channel assembly details, see "Hinge A Expansion Joint Details No.8" sheet.
4. For connection detail between Trelleborg Transflex 2400 and deck plate see, "Hinge A Expansion Joint Details No.4" sheet.
5. For diverter plate detail on Deck PL G, see Detail L on "Hinge A Expansion Joint Details No.8" sheet.
6. For Section D-D and Section E-E, see "Hinge A Expansion Joint Details No.5" sheet.

CONTRACT CHANGE ORDER NO. _____
SHEET ____ OF ____

REQUESTS FOR INFORMATION NOT ADDRESSED IN THIS CCO REMAIN IN FORCE

ALL DIMENSIONS ARE IN MILLIMETERS UNLESS OTHERWISE SHOWN

R. Valizadeh/V. Toan/Y.L./W.L./F.C.
DESIGN OVERSIGHT
Roya Valizadeh / Vong Toan / Y. Liu
SIGN OFF DATE 10/22/10

MARK	DATE	DESCRIPTIONS	BY	CH'D	CCO#
0	10/22/10	SEISMIC JOINT MODIFICATIONS HINGE A	CR	MN	25

REVISIONS

DESIGN	BY C. Redfield	CHECKED M. Nader	
DETAILS	BY H. Patel	CHECKED M. Benolt	
QUANTITIES	BY H. Patel	CHECKED J. Duxbury	

PREPARED FOR THE STATE OF CALIFORNIA DEPARTMENT OF TRANSPORTATION

R. Manzanarez
PROJECT ENGINEER

BRIDGE NO. 34-0006L/R
KILOMETER POST 13.2/13.9

SAN FRANCISCO OAKLAND BAY BRIDGE
EAST SPAN SEISMIC SAFETY PROJECT
SELF-ANCHORED SUSPENSION BRIDGE
(SUPERSTRUCTURE & TOWER)

HINGE A EXPANSION JOINT DETAILS NO.12

Rev. Date: 5-18-98

ORIGINAL SCALE IN MILLIMETERS FOR REDUCED PLANS 0 10 20 30 40 50 60 70 80 90 100

CU 04
EA 0120F1

DISREGARD PRINTS BEARING EARLIER REVISION DATES

REVISION DATES (PRELIMINARY STAGE ONLY) 10/22/10

SHEET 447S10 OF

FILE -> I:\bb\04-012001\sas\contract plans and cco\cco\cco#25\6-revision 10-22-10\dgn\akjnt01k.dgn

100 % PS&E

USERNAME -> arivera DATE PLOTTED -> 22 OCT 2010 TIME PLOTTED -> 13:47:00

DIST	COUNTY	ROUTE	KILOMETER POST TOTAL PROJECT	SHEET No	TOTAL SHEETS
04	SF	80	13.2/13.9	864SIIRI	1204

REGISTERED CIVIL ENGINEER DATE

10-22-10
PLANS APPROVAL DATE

REGISTERED PROFESSIONAL ENGINEER Enrico G. Maggenti No. 46920 Exp. 6/30/11 CIVIL STATE OF CALIFORNIA

The State of California or its officers or agents shall not be responsible for the accuracy or completeness of electronic copies of this plan sheet.

Caltrans now has a web site! To get to the web site, go to: http://www.dot.ca.gov

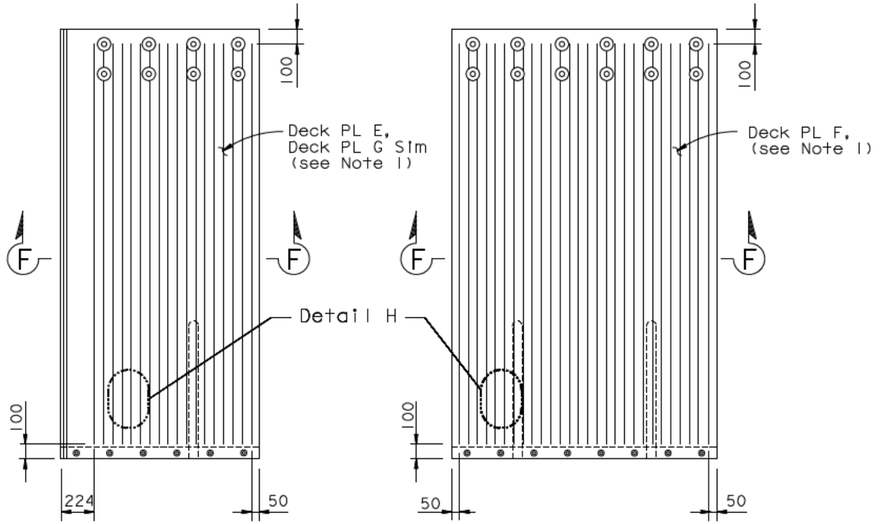

DECK PLATE E/G
(Deck PL E Shown, Deck PL G Similar)

DECK PLATE F

FRICTION PATTERN (See Note 3)
1:20

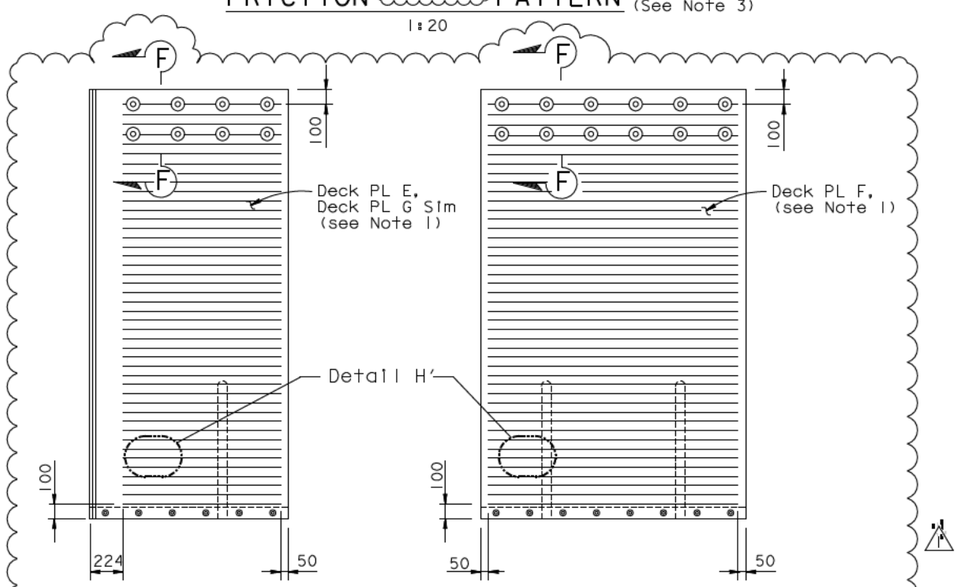

DECK PLATE E/G
(Deck PL E Shown, Deck PL G Similar)

DECK PLATE F

ALT FRICTION PATTERN (See Note 3)
1:20

NOTES:

1. For Details not shown, see "Hinge A Expansion Joint Details No. 12" sheet.
2. For Section F-F, Detail H and Detail H', see "Hinge A Expansion Joint Details No. 6" sheet.
3. Friction pattern type shall be selected as directed by the Engineer. Polymer/Aggregate Skid Coat (PASC) may be applied per Engineer's direction.

CONTRACT CHANGE ORDER NO. ____
SHEET ____ OF ____

REQUESTS FOR INFORMATION NOT ADDRESSED IN THIS CCO REMAIN IN FORCE

MARK	DATE	DESCRIPTIONS	BY	CH'D	CCO#
1	12/30/10	SEISMIC JOINT MODIFICATIONS HINGE A	RM	AA	25
0	10/22/10	SEISMIC JOINT MODIFICATIONS HINGE A	RM	AA	25

REVISIONS

	BY	CHECKED
DESIGN	R MAGGENTI	A AKINSANYA
DETAILS	R MAGGENTI	A AKINSANYA
QUANTITIES	R MAGGENTI	A AKINSANYA

STATE OF CALIFORNIA
DEPARTMENT OF TRANSPORTATION

DIVISION OF ENGINEERING SERVICES
STRUCTURE DESIGN
SPECIAL DESIGNS BRANCH

BRIDGE NO. 34-0006 L/R
KILOMETER POST 13.2/13.9

SAN FRANCISCO OAKLAND BAY BRIDGE
EAST SPAN SEISMIC SAFETY PROJECT
SELF-ANCHORED SUSPENSION BRIDGE
(SUPERSTRUCTURE & TOWER)

SEISMIC JOINT (HINGE A)
HINGE A EXPANSION JOINT DETAILS NO. 13

Caltrans Metric

ALL DIMENSIONS ARE IN MILLIMETERS UNLESS OTHERWISE SHOWN

ORIGINAL SCALE IN MILLIMETERS FOR REDUCED PLANS 0 10 20 30 40 50 60 70 80 90 100

CU 04
EA 0120F1

DISREGARD PRINTS BEARING EARLIER REVISION DATES 10/22/10

REVISION DATES

SHEET 447SIIRI OF

FILE => spec_des_br_proj/04-0120F1/1:\bb\04-012001\sds\contract plans and cco\cco\cco#25\7-revision 12-30-10\dgn\akjnt011.dgn

USERNAME => DWinrow DATE PLOTTED => 30 DEC 2010 TIME PLOTTED => 13:26:25

DIST	COUNTY	ROUTE	KILOMETER POST TOTAL PROJECT	SHEET No	TOTAL SHEETS
04	SF	80	13.2/13.9	865R5	1204

REGISTERED CIVIL ENGINEER DATE

09-15-2006
PLANS APPROVAL DATE

REGISTERED PROFESSIONAL ENGINEER
EFTHYMIOS DELIS
No. 51434
Exp. 6-30-08
CIVIL
STATE OF CALIFORNIA

The State of California or its officers or agents shall not be responsible for the accuracy or completeness of electronic copies of this plan sheet.

Caltrans now has a web site! To get to the web site, go to: http://www.dot.ca.gov

5 This Sheet Intentionally Left Blank.

REGISTERED PROFESSIONAL ENGINEER
Enrico C. Maggenti
No. 46920
Exp. 6/30/11
CIVIL
STATE OF CALIFORNIA

FOR REVISIONS 4 AND 5 ONLY

CONTRACT CHANGE ORDER NO. _____
SHEET ____ OF ____

REQUESTS FOR INFORMATION NOT ADDRESSED IN THIS CCO REMAIN IN FORCE

MARK	DATE	DESCRIPTIONS	BY	CH'D	CCO#
5	07/30/10	SEISMIC JOINT MODIFICATIONS HINGE A	RM	AA	25
4	10/30/09	SEISMIC JOINT MODIFICATIONS HINGE A	RM	AA	25
3	07/17/08	SEISMIC JOINT MODIFICATIONS HINGE A	TD	AK	25
2	12/18/07	SEISMIC JOINT MODIFICATIONS HINGE A	TD	AK	25
1	09/15/06	JOINT IMPROVEMENTS	TD	AK	25

REVISIONS

Caltrans Metric

ALL DIMENSIONS ARE IN MILLIMETERS UNLESS OTHERWISE SHOWN

ORIGINAL SCALE IN MILLIMETERS FOR REDUCED PLANS 0 10 20 30 40 50 60 70 80 90 100

	BY	CHECKED
DESIGN	E DELIS	A KARTOUM
DETAILS	A R DUDSAK	A KARTOUM
QUANTITIES	E DELIS	A KARTOUM

STATE OF CALIFORNIA
DEPARTMENT OF TRANSPORTATION

DIVISION OF ENGINEERING SERVICES
STRUCTURE DESIGN
SPECIAL DESIGNS BRANCH

CU 04
EA 0120F1

BRIDGE NO. 34-0006 L/R
KILOMETER POST 13.2/13.9

SAN FRANCISCO OAKLAND BAY BRIDGE
EAST SPAN SEISMIC SAFETY PROJECT

SELF-ANCHORED SUSPENSION BRIDGE
(SUPERSTRUCTURE & TOWER)

SEISMIC JOINT (HINGE A)

CROSS SECTION

DISREGARD PRINTS BEARING EARLIER REVISION DATES

REVISION DATES: 1/24/06 8/18/06 10/30/06 1/17/08 7/17/08

SHEET 448R5 OF

FILE => spec_des_br_proj/04-0120F1/1:\bb\04-012001\sds\contract plans and cco\cco\cco#25\5-revision 07-30-10\dgn\ddgp01.dgn

USERNAME => arivera DATE PLOTTED => 30 JUL 2010 TIME PLOTTED => 11:31:33

DIST	COUNTY	ROUTE	KILOMETER POST TOTAL PROJECT	SHEET No	TOTAL SHEETS
04	SF	80	13.2/13.9	866R3	1204

REGISTERED CIVIL ENGINEER DATE

09-15-2006
PLANS APPROVAL DATE

REGISTERED PROFESSIONAL ENGINEER
EFTHYMIOS DELIS
No. 51434
Exp. 6-30-08
CIVIL
STATE OF CALIFORNIA

The State of California or its officers or agents shall not be responsible for the accuracy or completeness of electronic copies of this plan sheet.

Caltrans now has a web site! To get to the web site, go to: http://www.dot.ca.gov

REGISTERED PROFESSIONAL ENGINEER
Enrico G. Maggenti
No. 46920
Exp. 6/30/11
CIVIL
STATE OF CALIFORNIA

FOR REVISION 3 ONLY

3 This Sheet Intentionally Left Blank.

CONTRACT CHANGE ORDER NO. ____
SHEET ____ OF ____

REQUESTS FOR INFORMATION NOT ADDRESSED IN THIS CCO REMAIN IN FORCE

MARK	DATE	DESCRIPTIONS	BY	CH'D	CCO#
3	07/30/10	SEISMIC JOINT MODIFICATIONS HINGE A	RM	AA	25
2	01/07/08	SEISMIC JOINT MODIFICATIONS HINGE A	TD	AK	25
1	09/15/06	SHEET NUMBERING/LEGEND	TD	AK	25

REVISIONS

Caltrans Metric

ALL DIMENSIONS ARE IN MILLIMETERS UNLESS OTHERWISE SHOWN

ORIGINAL SCALE IN MILLIMETERS FOR REDUCED PLANS 0 10 20 30 40 50 60 70 80 90 100

DESIGN	BY E DELIS	CHECKED A KARTOUM	
DETAILS	BY A R DUDSAK	CHECKED A KARTOUM	
QUANTITIES	BY E DELIS	CHECKED A KARTOUM	

STATE OF CALIFORNIA
DEPARTMENT OF TRANSPORTATION

DIVISION OF ENGINEERING SERVICES
STRUCTURE DESIGN
SPECIAL DESIGNS BRANCH

CU 04
EA 0120F1

BRIDGE NO. 34-0006 L/R
KILOMETER POST 13.2/13.9

SAN FRANCISCO OAKLAND BAY BRIDGE
EAST SPAN SEISMIC SAFETY PROJECT
SELF-ANCHORED SUSPENSION BRIDGE
(SUPERSTRUCTURE & TOWER)

SEISMIC JOINT (HINGE A)

INDEX TO PLANS

DISREGARD PRINTS BEARING EARLIER REVISION DATES

REVISION DATES: 1/24/06 8/18/06 10/30/06 1/7/08

SHEET 449R3 OF

FILE => spec_des_br_proj/04-0120F1/1:\bb\04-012001\sds\contract plans and cco\cco\cco#25\5-revision 07-30-10\dgn\altp01.dgn

USERNAME => arivera DATE PLOTTED => 30 JUL 2010 TIME PLOTTED => 11:34:43

DIST	COUNTY	ROUTE	KILOMETER POST TOTAL PROJECT	SHEET No	TOTAL SHEETS
04	SF	80	13.2/13.9	867R5	1204

REGISTERED CIVIL ENGINEER DATE

09-15-2006
PLANS APPROVAL DATE

REGISTERED PROFESSIONAL ENGINEER
EFTHYMIOS DELIS
No. 51434
Exp. 6-30-10
CIVIL
STATE OF CALIFORNIA

The State of California or its officers or agents shall not be responsible for the accuracy or completeness of electronic copies of this plan sheet.

Caltrans now has a web site! To get to the web site, go to: http://www.dot.ca.gov

CONTRACT CHANGE ORDER NO. _____
SHEET ____ OF ____

REQUESTS FOR INFORMATION NOT ADDRESSED IN THIS CCO REMAIN IN FORCE

MARK	DATE	DESCRIPTIONS	BY	CH'D	CCO#
5	07/30/10	SEISMIC JOINT MODIFICATIONS HINGE A	RM	AA	25
4	10/30/09	SEISMIC JOINT MODIFICATIONS HINGE A	RM	AA	25
3	12/23/08	SEISMIC JOINT MODIFICATIONS HINGE A	TD	AK	25
2	12/18/07	SEISMIC JOINT MODIFICATIONS HINGE A	TD	AK	25
1	09/15/06	STEEL PLATES AND SEAL CHANGES	TD	AK	25

REVISIONS

Caltrans Metric

ALL DIMENSIONS ARE IN MILLIMETERS UNLESS OTHERWISE SHOWN

ORIGINAL SCALE IN MILLIMETERS FOR REDUCED PLANS 0 10 20 30 40 50 60 70 80 90 100

	BY	CHECKED
DESIGN	E DELIS	A KARTOUM
DETAILS	A R DUDSAK	A KARTOUM
QUANTITIES	E DELIS	A KARTOUM

STATE OF CALIFORNIA
DEPARTMENT OF TRANSPORTATION

DIVISION OF ENGINEERING SERVICES
STRUCTURE DESIGN
SPECIAL DESIGNS BRANCH

CU 04
EA 0120F1

BRIDGE NO. 34-0006 L/R
KILOMETER POST 13.2/13.9

REGISTERED PROFESSIONAL ENGINEER
Enrico G. Maggenti
No. 46920
Exp. 6/30/11
CIVIL
STATE OF CALIFORNIA

FOR REVISIONS 4 AND 5 ONLY

5 This Sheet Intentionally Left Blank.

SAN FRANCISCO OAKLAND BAY BRIDGE
EAST SPAN SEISMIC SAFETY PROJECT

SELF-ANCHORED SUSPENSION BRIDGE
(SUPERSTRUCTURE & TOWER)

SEISMIC JOINT (HINGE A)

DECK PLATE DETAILS NO 1

DISREGARD PRINTS BEARING EARLIER REVISION DATES

REVISION DATES: 1/24/06 8/18/06 10/30/06 1/7/08 12/23/08 2/16/09 2/18/09 2/18/09 2/24/09

SHEET 450R5 OF

USERNAME => arivera DATE PLOTTED => 30 JUL 2010 TIME PLOTTED => 11:43:16

FILE => spec_des_br_proj/04-0120F1/1:\bb\04-012001\sds\contract plans and cco\cco\cco#25\5-revision 07-30-10\dgn\dkjsb01.dgn

DIST	COUNTY	ROUTE	KILOMETER POST TOTAL PROJECT	SHEET No	TOTAL SHEETS
04	SF	80	13.2/13.9	868R5	1204

REGISTERED CIVIL ENGINEER DATE

09-15-2006
PLANS APPROVAL DATE

REGISTERED PROFESSIONAL ENGINEER
EFTHYMIOS DELIS
No. 51434
Exp. 6-30-10
CIVIL
STATE OF CALIFORNIA

The State of California or its officers or agents shall not be responsible for the accuracy or completeness of electronic copies of this plan sheet.

Caltrans now has a web site! To get to the web site, go to: http://www.dot.ca.gov

5 This Sheet Intentionally Left Blank.

REGISTERED PROFESSIONAL ENGINEER
Enrico C. Maggenti
No. 46920
Exp. 6/30/11
CIVIL
STATE OF CALIFORNIA

FOR REVISIONS 4 AND 5 ONLY

CONTRACT CHANGE ORDER NO. ____
SHEET ___ OF ___

REQUESTS FOR INFORMATION NOT ADDRESSED IN THIS CCO REMAIN IN FORCE

MARK	DATE	DESCRIPTIONS	BY	CH'D	CCO#
5	07/30/10	SEISMIC JOINT MODIFICATIONS HINGE A	RM	AA	25
4	10/30/09	SEISMIC JOINT MODIFICATIONS HINGE A	RM	AA	25
3	12/23/08	SEISMIC JOINT MODIFICATIONS HINGE A	TD	AK	25
2	12/18/07	SEISMIC JOINT MODIFICATIONS HINGE A	TD	AK	25
1	09/15/06	DECK PLATE CHANGES	TD	AK	25

REVISIONS

Caltrans Metric

ALL DIMENSIONS ARE IN MILLIMETERS UNLESS OTHERWISE SHOWN

ORIGINAL SCALE IN MILLIMETERS FOR REDUCED PLANS 0 10 20 30 40 50 60 70 80 90 100

DESIGN	BY E DELIS	CHECKED A KARTOUM	
DETAILS	BY A R DUDSAK	CHECKED A KARTOUM	
QUANTITIES	BY E DELIS	CHECKED A KARTOUM	

STATE OF CALIFORNIA
DEPARTMENT OF TRANSPORTATION

DIVISION OF ENGINEERING SERVICES
STRUCTURE DESIGN
SPECIAL DESIGNS BRANCH

CU 04
EA 0120F1

BRIDGE NO. 34-0006 L/R
KILOMETER POST 13.2/13.9

SAN FRANCISCO OAKLAND BAY BRIDGE
EAST SPAN SEISMIC SAFETY PROJECT

SELF-ANCHORED SUSPENSION BRIDGE
(SUPERSTRUCTURE & TOWER)

SEISMIC JOINT (HINGE A)

DECK PLATE DETAILS NO 2

DISREGARD PRINTS BEARING EARLIER REVISION DATES

REVISION DATES: 1/24/06 8/18/06 10/30/06 1/7/08 12/23/08 2/4/09 2/18/09 2/18/09

SHEET 451R5 OF

FILE => spec_des_br_proj/04-0120F1/1:\bb\04-012001\sds\contract plans and cco\cco\cco#25\5-revision 07-30-10\dgn\dkjsb02.dgn

USERNAME => arivera DATE PLOTTED => 30 JUL 2010 TIME PLOTTED => 11:43:54

DIST.	COUNTY	ROUTE	KILOMETER POST TOTAL PROJECT	SHEET NO.	TOTAL SHEETS
08	SF	80	13.2/13.9	869R2	1204

REGISTERED ENGINEER - CIVIL

09-15-2006

PLANS APPROVAL DATE

REGISTERED PROFESSIONAL ENGINEER
EFTHYMIOS DELIS
No. 51434
Exp. 6-30-08
CIVIL
STATE OF CALIFORNIA

The State of California or its officers or agents shall not be responsible for the accuracy or completeness of electronic copies of this plan sheet.

Caltrans now has a web site! To get to the web site, go to: http://www.dot.ca.gov

△2 This Sheet Intentionally Left Blank.

REGISTERED PROFESSIONAL ENGINEER
Enrico C. Maggenti
No. 46920
Exp. 6/30/11
CIVIL
STATE OF CALIFORNIA

FOR REVISION △2 ONLY

CONTRACT CHANGE ORDER NO. _____
SHEET ____ OF ____

REQUESTS FOR INFORMATION NOT ADDRESSED IN THIS CCO REMAIN IN FORCE

Caltrans Metric

MARK	DATE	DESCRIPTIONS	BY	CH'D	CCO#
△2	07/30/10	SEISMIC JOINT MODIFICATIONS HINGE A	RM	AA	25
△1	09/15/06	CHANNEL IMPROVEMENTS	TD	AK	25

REVISIONS

	BY	CHECKED
DESIGN	E DELIS	A KARTOUM
DETAILS	A R DUDSAK	A KARTOUM
QUANTITIES	E DELIS	A KARTOUM

STATE OF CALIFORNIA
DEPARTMENT OF TRANSPORTATION

DIVISION OF ENGINEERING SERVICES
STRUCTURE DESIGN
SPECIAL DESIGNS BRANCH

BRIDGE NO. 34-0006 L/R
KILOMETER POST 13.2/13.9

SAN FRANCISCO OAKLAND BAY BRIDGE
EAST SPAN SEISMIC SAFETY PROJECT
SELF-ANCHORED SUSPENSION BRIDGE
(SUPERSTRUCTURE & TOWER)

SEISMIC JOINT (HINGE A)

CHANNEL ASSEMBLY DETAILS NO 1

ALL DIMENSIONS ARE IN MILLIMETERS UNLESS OTHERWISE SHOWN

ORIGINAL SCALE IN MILLIMETERS FOR REDUCED PLANS 0 10 20 30 40 50 60 70 80 90 100

CU 04
EA 0120F1

DISREGARD PRINTS BEARING EARLIER REVISION DATES → 1/26/06 8/18/06 10/30/06

REVISION DATES (PRELIMINARY STAGE ONLY)

SHEET 452R2 OF

FILE => spec_des_br_proj/04-0120f1/akjsb03

USERNAME => arivera DATE PLOTTED => 30 JUL 2010 TIME PLOTTED => 11:44:41

DIST	COUNTY	ROUTE	KILOMETER POST TOTAL PROJECT	SHEET No	TOTAL SHEETS
04	SF	80	13.2/13.9	870R3	1204

REGISTERED CIVIL ENGINEER DATE

09-15-2006
PLANS APPROVAL DATE

REGISTERED PROFESSIONAL ENGINEER
EFTHYMIOS DELIS
No. 51434
Exp. 6-30-08
CIVIL
STATE OF CALIFORNIA

The State of California or its officers or agents shall not be responsible for the accuracy or completeness of electronic copies of this plan sheet.

Caltrans now has a web site! To get to the web site, go to: http://www.dot.ca.gov

REGISTERED PROFESSIONAL ENGINEER
Enrico C. Maggenti
No. 46920
Exp. 6/30/11
CIVIL
STATE OF CALIFORNIA

FOR REVISIONS 2 AND 3 ONLY

3 This Sheet Intentionally Left Blank.

CONTRACT CHANGE ORDER NO. ____
SHEET ____ OF ____

REQUESTS FOR INFORMATION NOT ADDRESSED IN THIS CCO REMAIN IN FORCE

MARK	DATE	DESCRIPTIONS	BY	CH'D	CCO#
3	07/30/10	SEISMIC JOINT MODIFICATIONS HINGE A	RM	AA	25
2	10/30/09	SEISMIC JOINT MODIFICATIONS HINGE A	RM	AA	25
1	09/15/06	CHANNEL IMPROVEMENTS	TD	AK	25

REVISIONS

Caltrans Metric

ALL DIMENSIONS ARE IN MILLIMETERS UNLESS OTHERWISE SHOWN

ORIGINAL SCALE IN MILLIMETERS FOR REDUCED PLANS 0 10 20 30 40 50 60 70 80 90 100

DESIGN	BY E DELIS	CHECKED A KARTOUM	
DETAILS	BY A R DUDSAK	CHECKED A KARTOUM	
QUANTITIES	BY E DELIS	CHECKED A KARTOUM	

STATE OF CALIFORNIA
DEPARTMENT OF TRANSPORTATION

DIVISION OF ENGINEERING SERVICES
STRUCTURE DESIGN
SPECIAL DESIGNS BRANCH

CU 04
EA 0120F1

BRIDGE NO. 34-0006 L/R
KILOMETER POST 13.2/13.9

SAN FRANCISCO OAKLAND BAY BRIDGE
EAST SPAN SEISMIC SAFETY PROJECT

SELF-ANCHORED SUSPENSION BRIDGE
(SUPERSTRUCTURE & TOWER)

SEISMIC JOINT (HINGE A)

CHANNEL ASSEMBLY DETAILS NO 2

DISREGARD PRINTS BEARING EARLIER REVISION DATES

REVISION DATES: 1/24/06 8/18/06 10/30/06 1/7/08

SHEET 453R3 OF

FILE => spec_des_br_proj/04-0120F1/1:\bb\04-012001\sds\contract plans and cco\cco\cco#25\5-revision 07-30-10\dgn\dkjsb04.dgn

USERNAME => arivera DATE PLOTTED => 30 JUL 2010 TIME PLOTTED => 11:45:35

DIST	COUNTY	ROUTE	KILOMETER POST TOTAL PROJECT	SHEET No	TOTAL SHEETS
04	SF	80	13.2/13.9	871R4	1204

REGISTERED CIVIL ENGINEER DATE

09-15-2006
PLANS APPROVAL DATE

REGISTERED PROFESSIONAL ENGINEER
EFTHYMIOS DELIS
No. 51434
Exp. 6-30-10
CIVIL
STATE OF CALIFORNIA

The State of California or its officers or agents shall not be responsible for the accuracy or completeness of electronic copies of this plan sheet.

Caltrans now has a web site! To get to the web site, go to: http://www.dot.ca.gov

CONTRACT CHANGE ORDER NO. _____
SHEET ____ OF ____

REQUESTS FOR INFORMATION NOT ADDRESSED IN THIS CCO REMAIN IN FORCE

MARK	DATE	DESCRIPTIONS	BY	CH'D	CCO#
4	07/30/10	SEISMIC JOINT MODIFICATIONS HINGE A	RM	AA	25
3	12/23/08	SEISMIC JOINT MODIFICATIONS HINGE A	TD	AK	25
2	12/18/07	SEISMIC JOINT MODIFICATIONS HINGE A	TD	AK	25
1	09/15/06	SUPPORT PLATE IMPROVEMENTS	TD	AK	25

REVISIONS

FOR REVISION 4 ONLY

REGISTERED PROFESSIONAL ENGINEER
Enrico G. Maggenti
No. 46920
Exp. 6/30/11
CIVIL
STATE OF CALIFORNIA

4 This Sheet Intentionally Left Blank.

Caltrans Metric

ALL DIMENSIONS ARE IN MILLIMETERS UNLESS OTHERWISE SHOWN

ORIGINAL SCALE IN MILLIMETERS FOR REDUCED PLANS 0 10 20 30 40 50 60 70 80 90 100

	BY	CHECKED
DESIGN	E DELIS	A KARTOUM
DETAILS	A R DUDSAK	A KARTOUM
QUANTITIES	E DELIS	A KARTOUM

STATE OF CALIFORNIA
DEPARTMENT OF TRANSPORTATION

DIVISION OF ENGINEERING SERVICES
STRUCTURE DESIGN
SPECIAL DESIGNS BRANCH

CU 04
EA 0120F1

BRIDGE NO. 34-0006 L/R
KILOMETER POST 13.2/13.9

SAN FRANCISCO OAKLAND BAY BRIDGE
EAST SPAN SEISMIC SAFETY PROJECT

SELF-ANCHORED SUSPENSION BRIDGE
(SUPERSTRUCTURE & TOWER)

SEISMIC JOINT (HINGE A)

SUPPORT PLATE DETAILS

DISREGARD PRINTS BEARING EARLIER REVISION DATES

REVISION DATES: 1/24/06 8/18/06 10/30/06 1/7/08 12/23/08 2/18/09 2/18/09 2/18/09

SHEET 454R4 OF

FILE => spec_des_br_proj/04-0120F1/1:\bb\04-012001\sds\contract plans and cco\cco\cco#25\5-revision 07-30-10\dgn\dkjsb05.dgn

USERNAME => arivera DATE PLOTTED => 30 JUL 2010 TIME PLOTTED => 11:48:31

DIST	COUNTY	ROUTE	KILOMETER POST TOTAL PROJECT	SHEET No	TOTAL SHEETS
04	SF	80	13.2/13.9	872R3	1204

REGISTERED CIVIL ENGINEER DATE

09-15-2006
PLANS APPROVAL DATE

REGISTERED PROFESSIONAL ENGINEER
EFTHYMIOS DELIS
No. 51434
Exp. 6-30-08
CIVIL
STATE OF CALIFORNIA

The State of California or its officers or agents shall not be responsible for the accuracy or completeness of electronic copies of this plan sheet.

Caltrans now has a web site! To get to the web site, go to: http://www.dot.ca.gov

REGISTERED PROFESSIONAL ENGINEER
Enrico G. Maggenti
No. 46920
Exp. 6/30/11
CIVIL
STATE OF CALIFORNIA

FOR REVISION 3 ONLY

3 This Sheet Intentionally Left Blank.

CONTRACT CHANGE ORDER NO. ____
SHEET ____ OF ____

REQUESTS FOR INFORMATION NOT ADDRESSED IN THIS CCO REMAIN IN FORCE

MARK	DATE	DESCRIPTIONS	BY	CH'D	CCO#
3	07/30/10	SEISMIC JOINT MODIFICATIONS HINGE A	RM	AA	25
2	12/18/07	SEISMIC JOINT MODIFICATIONS HINGE A	TD	AK	25
1	09/15/06	BLOCK OUT DETAILS	TD	AK	25

REVISIONS

Caltrans Metric

ALL DIMENSIONS ARE IN MILLIMETERS UNLESS OTHERWISE SHOWN

ORIGINAL SCALE IN MILLIMETERS FOR REDUCED PLANS 0 10 20 30 40 50 60 70 80 90 100

DESIGN	BY E DELIS	CHECKED	A KARTOUM
DETAILS	BY A R DUDSAK	CHECKED	A KARTOUM
QUANTITIES	BY E DELIS	CHECKED	A KARTOUM

STATE OF CALIFORNIA
DEPARTMENT OF TRANSPORTATION

DIVISION OF ENGINEERING SERVICES
STRUCTURE DESIGN
SPECIAL DESIGNS BRANCH

CU 04
EA 0120F1

BRIDGE NO. 34-0006 L/R
KILOMETER POST 13.2/13.9

SAN FRANCISCO OAKLAND BAY BRIDGE
EAST SPAN SEISMIC SAFETY PROJECT
SELF-ANCHORED SUSPENSION BRIDGE
(SUPERSTRUCTURE & TOWER)

SEISMIC JOINT (HINGE A)
REINFORCEMENT DETAILS

DISREGARD PRINTS BEARING EARLIER REVISION DATES

REVISION DATES: 1/24/06 8/18/06 10/30/06 1/7/08

SHEET 455R3 OF

USERNAME => arivera DATE PLOTTED => 30 JUL 2010 TIME PLOTTED => 11:49:05

FILE => spec_des_br_proj/04-0120F1/1:\bb\04-012001\sds\contract plans and cco\cco\cco#25\5-revision 07-30-10\dgn\dkjsb06.dgn

CONTRACT CHANGE ORDER

Change Requested by: Engineer

CCO: 25 **Suppl. No. 1** **Contract No. 04 – 0120F4** **Road** SF-80-13.2/13.9 **FED. AID LOC.:**

To: **AMERICAN BRIDGE/FLUOR ENTERPRISES INC A JOINT VENTURE**

You are directed to make the following changes from the plans and specifications or do the following described work not included in the plans and specifications for this contract. ***NOTE: This change order is not effective until approved by the Engineer.***

Description of work to be done, estimate of quantities and prices to be paid. (Segregate between additional work at contract price, agreed price and force account.) Unless otherwise stated, rates for rental of equipment cover only such time as equipment is actually used and no allowance will be made for idle time. This last percentage shown is the net accumulated increase or decrease from the original quantity in the Engineer's Estimate.

Adjustment of Compensation at Lump Sum:

ITEM 1.

Revise the barrier rail near Hinge A.

The following revised plan sheets detail the changes addressed in this change order: 893R4, 893S1R1, 894R4, and 894S1R1 (of 1204) as shown on sheets 2 through 5 of this change order.

This change order resolves the costs associated with Contractor Request for Information (RFI) number TC-RFI-0203R0 with respect to changes listed above.

Adjustment of Compensation at Lump Sum..... $86,303.00

ITEM 2.

The items identified above in this change order have been paid as part of CCO 108S1 resolution. Therefore, the amount due under this change order will be adjusted by the amount paid under CCO 108S1 to prevent a double payment. Total amount paid under CCO 108S1, and to be credited to this change, is $50,000.00.

Adjustment of Compensation at Lump Sum.....<$50,000.00>

CHANGE ORDER COST AND TIME SUMMARY

(ITEM 1) Adjustment of Compensation at Lump Sum	$86,303.00
(ITEM 2) Amount paid under CCO 108S1 for this change order	<$50,000.00>
Total net pay for this change order	$36,303.00

This sum constitutes full and complete compensation for furnishing all labor, material, tools and incidentals including all markups by reason of this change.

Estimated Cost: Increase ☒ Decrease ☐ $36,303.00

By reason of this order the time of completion will be adjusted as follows: 0 Days

Submitted by

Signature	**Resident Engineer**	Kannu Balan, Senior T.E.	**Date** 11-15-11

Approval Recommended by

Signature	**Program Manager** Brian Maroney for	Tony Anziano, Program Manager	**Date** 11/16/2011

Engineer Approval by

Signature	**Program Manager**	Tony Anziano, Program Manager	**Date** 11/29/11

We the undersigned contractor, have given careful consideration to the change proposed and agree, if this proposal is approved, that we will provide all equipment, furnish the materials, except as otherwise be noted above, and perform all services necessary for the work above specified, and will accept as full payment therefor the prices shown above.

NOTE: If you, the contractor, do not sign acceptance of this order, your attention is directed to the requirements of the specifications as to proceeding with the ordered work and filing a written protest within the time therein specified.

Contractor Acceptance by

Signature	(Print name and title) BRIAN A. PETERSEN - PROJECT DIRECTOR	**Date** 27NOV11

STATE OF CALIFORNIA - DEPARTMENT OF TRANSPORTATION

CONTRACT CHANGE ORDER MEMORANDUM

TO: Tony Anziano, Program Manager /	FILE: E.A. 04 - 0120F4 CO-RTE-PM SF-80-13.2/13.9 FED. NO.
FROM: Kannu Balan, Senior TE	
CCO#: 25 SUPPLEMENT#: 1 Category Code: CHSX	CONTINGENCY BALANCE (incl. this change) $147,296,868.58
COST: $36,303.00 INCREASE ☑ DECREASE ☐	HEADQUARTERS APPROVAL REQUIRED? ☑ YES ☐ NO
SUPPLEMENTAL FUNDS PROVIDED: $0.00	IS THIS REQUEST IN ACCORDANCE WITH ENVIRONMENTAL DOCUMENTS? ☑ YES ☐ NO
CCO DESCRIPTION: Hinge A Barrier Rail	**PROJECT DESCRIPTION:** CONSTRUCT SELF-ANCHORED SUSPENSION BRIDGE

Original Contract Time:	Time Adj. This Change:	Previously Approved CCO Time Adjustments:	Percentage Time Adjusted: (including this change)	Total # of Unreconciled Deferred Time CCO(s): (including this change)
2490 Day(s)	0 Day(s)	501 Day(s)	20 %	3

THIS CHANGE ORDER PROVIDES FOR:

Revising the barrier rail near Hinge A.

CCO 25 Supplement 0 modified the seismic joint details at Hinge A. As a result of these changes, barrier rail modifications are necessary in this area. The reversed orientation of the seismic joint on the WB bridge structure, necessitates that the barrier rail details on this structure also be reversed. The extended deck plate under the barrier rail and added diverter plate extend into the barrier rail, thereby requiring the internal diaphragms in the barrier rail to be adjusted. Details are provided to enable alignment adjustments between the as-built SAS and Skyway structures.

This change order resolves the costs associated with Contractor Request for Information (RFI) number TC-RFI-0203R0 with respect to changes listed above.

The amount of $50,000.00 for the changes prior to November 17, 2009, was paid in CCO 108 S1 (Fabrication Recovery). The additional cost of this change order is $36,303.00 for the changes that occurred after November 17, 2009. This will result in a cumulative amount of $1,089,851.00 for CCO 25S0 and 25S1. A detailed cost estimate is on file.

No time adjustment is warranted as this change order does not affect the controlling operation.

This change order has concurrence from Mike Forner (Principal TE), Pat Treacy (HQ Oversight), Rick Morrow (Supervising BE), Ken Terpstra (Project Manager), Wenyi Long (Bridge Design), Lina Ellis (Maintenance), and Jing Chen (District Design) September 8, 2011.

Toll Bridge Program Oversight Committee (TBPOC) approved CCO 25 on November 3, 2011, for a value not to exceed amount of $1.5M.

CONCURRED BY:

Construction Engineer:	PCE, Mike Forner, Prin TE	Date	6/23/08
Bridge Engineer:	Rick Morrow, Sup BE	Date	6/4/08
Project Engineer:	CT Oversight, Wenyi Long, P.E.	Date	1/13/11
Project Manager:	Proj Manager, Ken Terpstra	Date	2/9/09
FHWA Rep.:		Date	
Environmental:		Date	
Other (specify):	HQ, Patrick Treacy	Date	6/9/08
Other (specify):	Struct. Maint, Lina Ellis	Date	1/18/11
District Prior Approval By:		Date	
HQ (Issue Approve) By:		Date	
Resident Engineer's Signature:	Kannu Bala	Date	11-15-11

ESTIMATE OF COST

	THIS REQUEST	TOTAL TO DATE
ITEMS	$0.00	$0.00
FORCE ACCOUNT	$0.00	$0.00
AGREED PRICE	$0.00	$0.00
ADJUSTMENT	$36,303.00	$1,089,851.00
TOTAL	$36,303.00	$1,089,851.00

FEDERAL PARTICIPATION

☐ PARTICIPATING ☐ PARTICIPATING IN PART ☑ NONE
☐ NON-PARTICIPATING (MAINTENANCE) ☐ NON-PARTICIPATING

FEDERAL SEGREGATION (if more than one Funding Source or P.I.P. type)
☐ CCO FUNDED PER CONTRACT ☐ CCO FUNDED AS FOLLOWS

FEDERAL FUNDING SOURCE	PERCENT

ADA Notice: For individuals with sensory disabilities, this document is available in alternate formats. For information call: (916) 654-6410 or TDD (916) 654-3880 or write Records and Forms Management, 1120 N Street, MS-89, Sacramento, CA 95814.

DIST.	COUNTY	ROUTE	KILOMETER POST TOTAL PROJECT	SHEET NO.	TOTAL SHEETS
04	SF	80	13.2/13.9	893R4	1204

REGISTERED ENGINEER - CIVIL

12-6-04
PLANS APPROVAL DATE

REGISTERED PROFESSIONAL ENGINEER Tien Hung Ho No. C 43990 Exp. 06/30/11 CIVIL STATE OF CALIFORNIA

The State of California or its officers or agents shall not be responsible for the accuracy or completeness of electronic copies of this plan sheet.

T.Y. LIN / MOFFATT & NICHOL
825 BATTERY STREET
SAN FRANCISCO, CA 94111

Caltrans now has a web site! To get to the web site, go to: http://www.dot.ca.gov

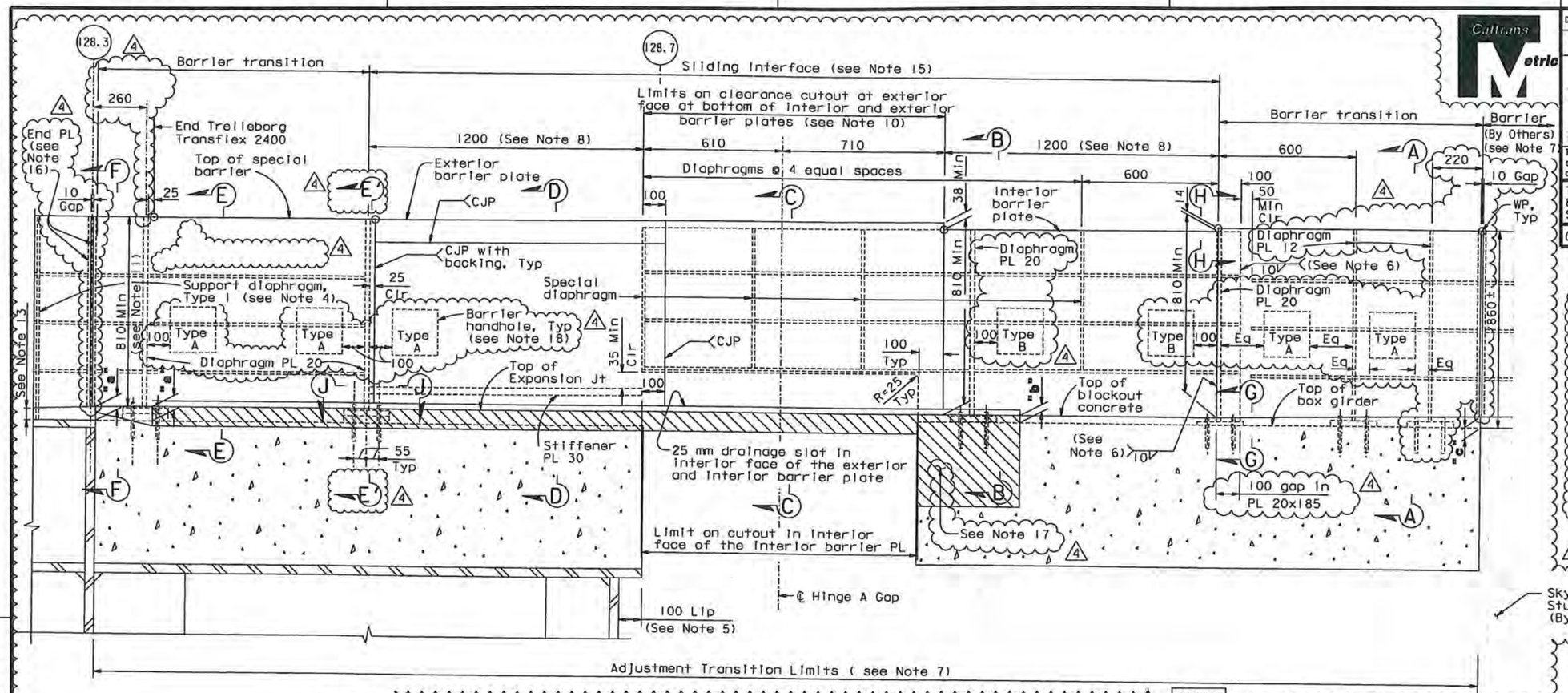

SAS

BARRIER AT HINGE A - NORTH SIDE

("E" Line Shown, "W" Line Similar)
1:10

PP		PROPOSED OVERLAY THICKNESS E Line "a"	"b"	"c"	W Line "a"	"b"	"c"	JOINT CROSS SLOPE (See Note 14) E Line	W Line
		mm (See Note 9)			mm (See Note 9)			%	%
Exp Jt Blockout	N	67	38	42	57	47	43	3.186	3.102
	S	25	57	50	32	50	50		

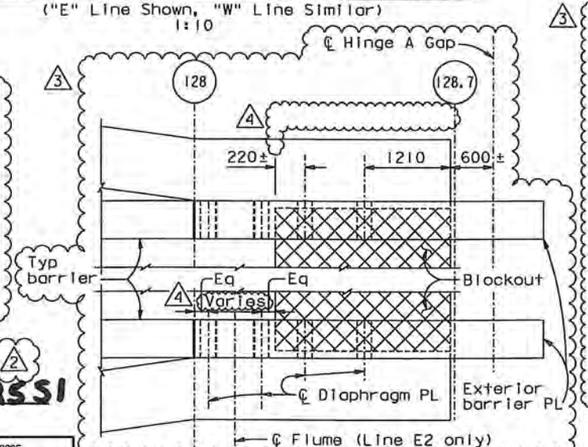

BARRIER AT HINGE A - PLAN VIEW

1:40

SKYWAY

- Min overlay thickness = 25 mm
- Max overlay thickness = 90 mm
- Rate of change of cross slope = 0.2% / m

10. Cope barrier PL to clear PL 20x185, see Section C-C on "Barrier Details No.6" sheet.
11. Shim North barrier on SAS as required to match barrier height at Expansion Joint. Barrier slope shall not exceed 1%. Shim PL shall be installed under the barrier base PL and under the barrier connections. The drainage cut-out in the barrier diaphragm shall not be blocked and the caulk bead shall be thickened appropriately.
12. Unless noted otherwise where calculated overlay at shoulder is greater than 50, overlay shall be tapered to 50 at barrier outside the "Adjustment Transition Limits" to maintain 810 min above the overlay at the barrier.
13. Runoff the overlay to 50 mm thick at a rate no steeper than 1:100, in shoulders beyond expansion joint transition.
14. Expansion joint shall be laid following longitudinal profile with constant cross slope throughout the expansion joint.
15. The interior and exterior barrier plate at sliding interface shall be parallel to allow for longitudinal movement without binding.

At the Contractor's option, the barrier may be detailed straight from PP128.3 to the existing Skyway barrier, subject to review and approval of the Engineer.

NOTES:

1. For details not shown, see "Barrier Details No.1" sheet.
2. For Standard diaphragm details, see Section C-C of "Barrier Details No.1" sheet.
3. For Sections A-A, B-B, C-C, D-D, F-F and G-G, see "Barrier Details No.6" sheet. For Sections E-E, H-H, J-J and Alt Section D-D, see "Barrier Details No.6A" sheet.
4. For support diaphragm Type I details not shown, see similar Section C-C on "Barrier Details No.1" sheet. For exterior barrier dimensions, see Section C-C on "Barrier Details No.1" sheet.
5. Barrier on the SAS side shall be trimmed by an amount equal to the amount of field trimming done at the lip.
6. For weld limits, see Section H-H on "Barrier Details 6A" sheet.
7. Field verify the as-built condition and dimensions before fabricating SAS barrier.
8. Values are for mean temperature of 20°C.
9. Tabulated overlay thickness is projected thickness at barrier based on Lowered Skyway Survey by ABF dated December 2009 and SAS cross slope of 3%. The contractor shall survey SAS and Skyway deck surfaces after installing Hinge A pipe beams. Based on this survey and the following criteria, the overlay thickness shall be calculated and submitted for approval.

16. For end plate details, see "Barrier Details No.2" sheet.
17. At the Contractor's option, it is acceptable to block out concrete and pour a non-shrink grout pad under base after setting alignment, subject to review and approval of the Engineer. All anchor bolts to be tightened after grout attains a minimum compressive strength of fcl = 75% fc.
18. Barrier handholes are on the exterior face. For details, see "Barrier Details No.6A" sheet.

Skyway Stuctures (By Others)

REVISION 3 SUPERSEDES REVISIONS 1 & 2

CONTRACT CHANGE ORDER NO. 2551
SHEET 2 OF 5

REQUESTS FOR INFORMATION NOT ADDRESSED IN THIS CCO REMAIN IN FORCE

MARK	DATE	DESCRIPTIONS	BY	CH'D	CCO#
4	03/25/11	HINGE A BARRIER RAIL MODIFICATIONS	TH	GB	2551
3	10/22/10	HINGE A BARRIER RAIL MODIFICATIONS	TH	GB	2551
2	01/30/09	HINGE A BARRIER RAIL MODIFICATIONS	TH	AB	2551
1	03/28/08	HINGE A BARRIER RAIL MODIFICATIONS	TH	AS	2551

REVISIONS

R. Valizadeh/V. Toan/Y.L./W.L./F.C.
DESIGN OVERSIGHT
SIGN OFF DATE 03/29/11

Rev. Date: 5-18-98

DESIGN	BY T. Ho	CHECKED N. Vo	
DETAILS	BY G. Baker	CHECKED N. Vo	
QUANTITIES	BY T. Ho	CHECKED N. Vo	

PREPARED FOR THE STATE OF CALIFORNIA DEPARTMENT OF TRANSPORTATION

R. Manzanarez
PROJECT ENGINEER

ALL DIMENSIONS ARE IN MILLIMETERS UNLESS OTHERWISE SHOWN

BRIDGE NO. 34-0006L/R
KILOMETER POST 13.2/13.9

SAN FRANCISCO OAKLAND BAY BRIDGE
EAST SPAN SEISMIC SAFETY PROJECT
SELF-ANCHORED SUSPENSION BRIDGE
(SUPERSTRUCTURE & TOWER)

BARRIER DETAILS NO. 5

CU 04
EA 0120F1

ORIGINAL SCALE IN MILLIMETERS FOR REDUCED PLANS 0 10 20 30 40 50 60 70 80 90 100

DISREGARD PRINTS BEARING EARLIER REVISION DATES 01/06/02 01/07/02 12/05/02 01/16/03

REVISION DATES (PRELIMINARY STAGE ONLY)

SHEET 476R4 OF

FILE => I:\bb\04-012001\sas\contract plans and cco\cco\cco#2551\7-revision 03-25-11\dgn\akbar04.dgn

USERNAME => DWinrow DATE PLOTTED => 24 MAR 2011 TIME PLOTTED => 12:51:56

100% PS&E

DIST.	COUNTY	ROUTE	KILOMETER POST TOTAL PROJECT	SHEET NO.	TOTAL SHEETS
04	SF	80	13.2/13.9	893SIRI	1204

REGISTERED ENGINEER - CIVIL

10-22-10
PLANS APPROVAL DATE

PROFESSIONAL ENGINEER — Tien Hung Ho — No. C 43990 — Exp. 06/30/11 — CIVIL — STATE OF CALIFORNIA

The State of California or its officers or agents shall not be responsible for the accuracy or completeness of electronic copies of this plan sheet.

T.Y. LIN / MOFFATT & NICHOL
825 BATTERY STREET
SAN FRANCISCO, CA 94111

Caltrans now has a web site! To get to the web site, go to: http://www.dot.ca.gov

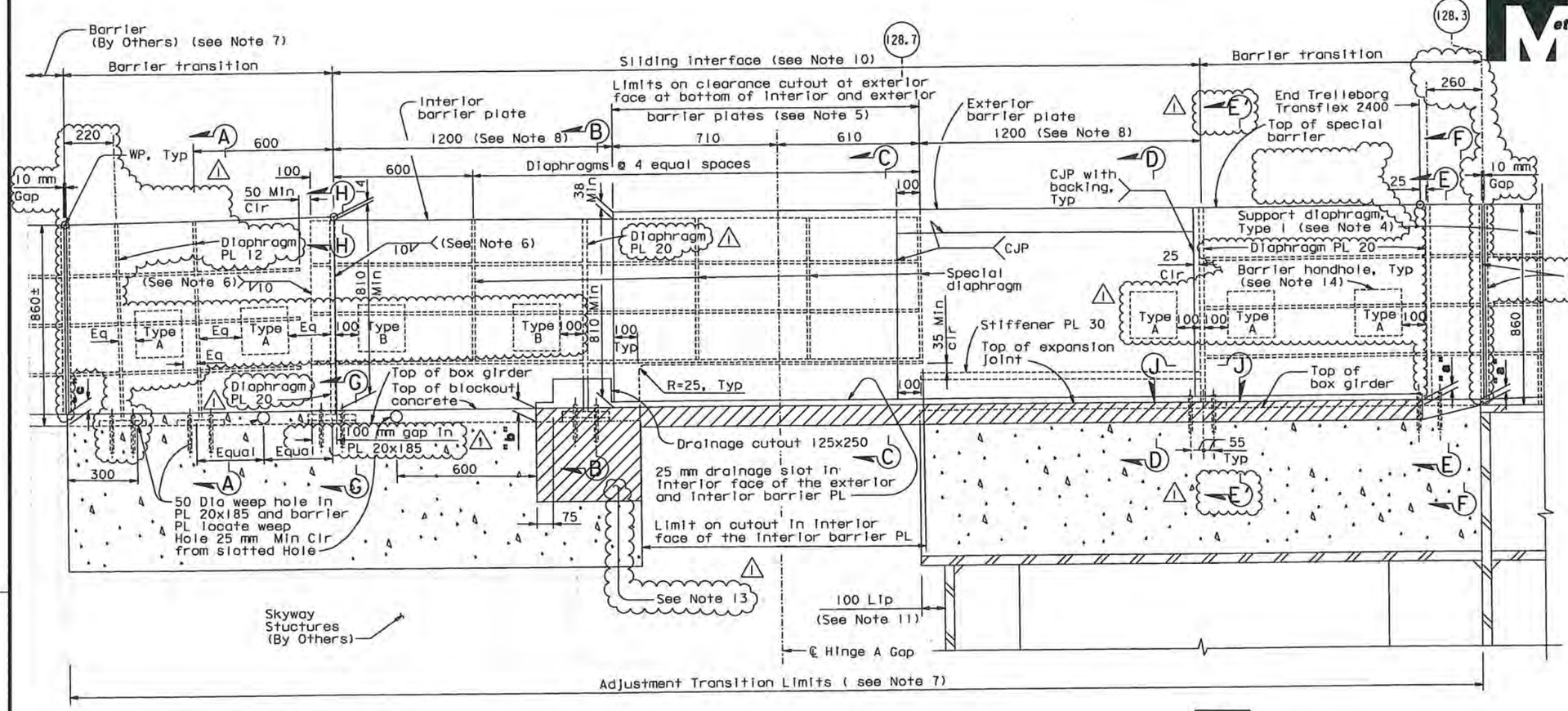

BARRIER AT HINGE A - SOUTH SIDE

("E" Line Shown, "W" Line Similar)

1:10

NOTES:

1. For details not shown, see "Barrier Details No. 1" sheet.
2. For Standard diaphragm details, see Section C-C of "Barrier Details No. 1" sheet.
3. For Sections A-A, B-B, C-C, D-D, F-F and G-G, see "Barrier Details No. 6" sheet. For Sections E-E, H-H, J-J and Alt Section D-D, see "Barrier Details No. 6A" sheet.
4. For support diaphragm Type I details not shown, see similar Section C-C on "Barrier Details No. 1" sheet. For exterior barrier dimensions, see Section C-C on "Barrier Details No. 1" sheet.
5. Cope barrier PL to clear PL 20x185, see Section C-C on "Barrier Details No. 6" sheet.
6. For weld limits, see Section H-H on "Barrier Details 6A" sheet.
7. Field verify the as-built condition and dimensions before fabricating SAS barrier.
8. Values are for mean temperature of 20°C.
9. Unless noted otherwise where calculated overlay at shoulder is greater than 50, overlay shall be tapered to 50 at barrier outside the "Adjustment Transition Limits" to maintain 810 min above the overlay at the barrier.
10. The interior and exterior barrier plate at sliding interface shall be parallel to allow for longitudinal movement without binding. At the Contractor's option, the barrier may be detailed straight from PP128.3 to the existing Skyway barrier, subject to review and approval of the Engineer.
11. Barrier on the SAS side shall be trimmed by an amount equal to the amount of field trimming done at the lip.
12. For end plate details, see "Barrier Details No. 2" sheet.
13. At the Contractor's option, it is acceptable to block out concrete and pour a non-shrink grout pad under base after setting alignment, subject to review and approval by the Engineer. All anchor bolts to be tightened after grout attains a minimum compressive strength of f'cl = 75% f'c.
14. Barrier handholes are on the exterior face. For details, see "Barrier Details No. 6A" sheet.

CONTRACT CHANGE ORDER NO. 25 SI
SHEET 3 OF 5

REQUESTS FOR INFORMATION NOT ADDRESSED IN THIS CCO REMAIN IN FORCE

ALL DIMENSIONS ARE IN MILLIMETERS UNLESS OTHERWISE SHOWN

R. Valizadeh/V. Toon/Y.L./W.L./F.C.
DESIGN OVERSIGHT
SIGN OFF DATE 03/29/11

MARK	DATE	DESCRIPTIONS	BY	CH'D	CCO#
1	03/25/11	HINGE A BARRIER RAIL MODIFICATIONS	TH	GB	25SI
0	10/22/10	HINGE A BARRIER RAIL MODIFICATIONS	TH	GB	25SI

REVISIONS

	BY	CHECKED
DESIGN	T. Ho	G. Baker
DETAILS	H. Patel	T. Ho
QUANTITIES	H. Patel	J. Duxbury

PREPARED FOR THE STATE OF CALIFORNIA DEPARTMENT OF TRANSPORTATION

R. Manzanarez
PROJECT ENGINEER

BRIDGE NO. 34-0006L/R
KILOMETER POST 13.2/13.9

SAN FRANCISCO OAKLAND BAY BRIDGE
EAST SPAN SEISMIC SAFETY PROJECT
SELF-ANCHORED SUSPENSION BRIDGE
(SUPERSTRUCTURE & TOWER)

BARRIER DETAILS NO. 5A

Rev. Date: 5-18-98

ORIGINAL SCALE IN MILLIMETERS FOR REDUCED PLANS 0 10 20 30 40 50 60 70 80 90 100

CU 04
EA 0120F1

DISREGARD PRINTS BEARING EARLIER REVISION DATES 10/22/10

REVISION DATES (PRELIMINARY STAGE ONLY)

SHEET 476SIRI OF

FILE -> I:\bb\04-012001\sas\contract plans and cco\cco\cco#25si\7-revision 03-25-11\dgn\okbar04a.dgn

USERNAME -> DWinrow DATE PLOTTED -> 24 MAR 2011 TIME PLOTTED -> 12:53:10

100 % P,S&E

DIST.	COUNTY	ROUTE	KILOMETER POST TOTAL PROJECT	SHEET NO.	TOTAL SHEETS
04	SF	80	13.2/13.9	894R4	1204

REGISTERED ENGINEER - CIVIL

12-6-04
PLANS APPROVAL DATE

The State of California or its officers or agents shall not be responsible for the accuracy or completeness of electronic copies of this plan sheet.

REGISTERED PROFESSIONAL ENGINEER Tien Hung Ho No. C 43990 Exp. 6/30/11 CIVIL STATE OF CALIFORNIA

T.Y. LIN / MOFFATT & NICHOL
825 BATTERY STREET
SAN FRANCISCO, CA 94111

Caltrans now has a web site! To get to the web site, go to: http://www.dot.ca.gov

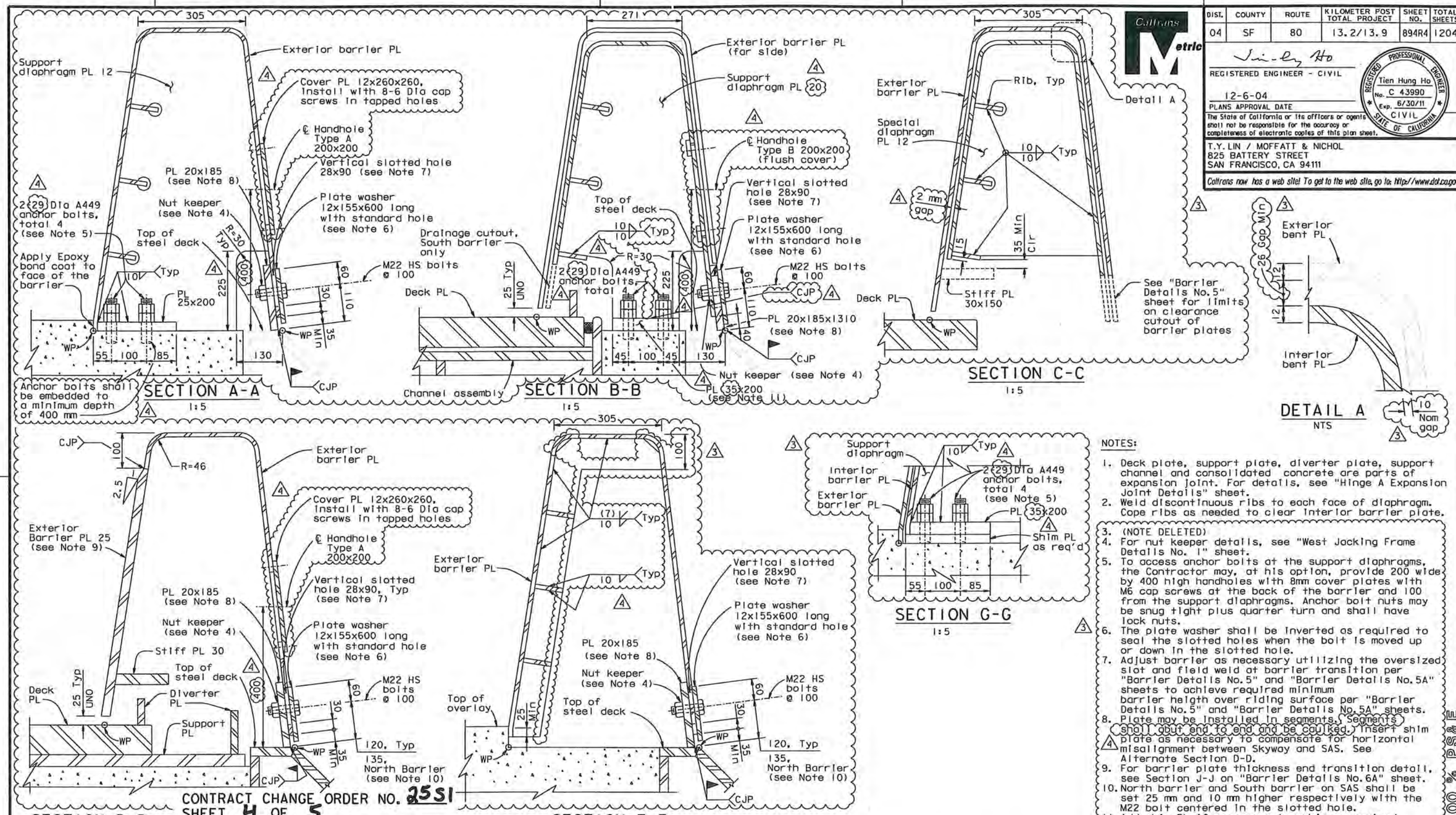

NOTES:

1. Deck plate, support plate, diverter plate, support channel and consolidated concrete are parts of expansion joint. For details, see "Hinge A Expansion Joint Details" sheet.
2. Weld discontinuous ribs to each face of diaphragm. Cope ribs as needed to clear interior barrier plate.
3. (NOTE DELETED)
4. For nut keeper details, see "West Jacking Frame Details No. 1" sheet.
5. To access anchor bolts at the support diaphragms, the Contractor may, at his option, provide 200 wide by 400 high handholes with 8mm cover plates with M6 cap screws at the back of the barrier and 100 from the support diaphragms. Anchor bolt nuts may be snug tight plus quarter turn and shall have lock nuts.
6. The plate washer shall be inverted as required to seal the slotted holes when the bolt is moved up or down in the slotted hole.
7. Adjust barrier as necessary utilizing the oversized slot and field weld at barrier transition per "Barrier Details No.5" and "Barrier Details No.5A" sheets to achieve required minimum barrier height over riding surface per "Barrier Details No.5" and "Barrier Details No.5A" sheets.
8. Plate may be installed in segments. Segments shall cout end to end and be coulked. Insert shim plate as necessary to compensate for horizontal misalignment between Skyway and SAS. See Alternate Section D-D.
9. For barrier plate thickness end transition detail, see Section J-J on "Barrier Details No.6A" sheet.
10. North barrier and South barrier on SAS shall be set 25 mm and 10 mm higher respectively with the M22 bolt centered in the slotted hole.
11. Add shim PL if necessary to achieve required barrier height.

100 % PS&E

CONTRACT CHANGE ORDER NO. 25S1
SHEET 4 OF 5

REQUESTS FOR INFORMATION NOT ADDRESSED IN THIS CCO REMAIN IN FORCE

MARK	DATE	DESCRIPTIONS	BY	CH'D	CCO#
4	03/25/11	HINGE A BARRIER RAIL MODIFICATIONS	TH	GB	25S1
3	10/22/10	HINGE A BARRIER RAIL MODIFICATIONS	TH	GB	25S1
2	01/30/09	HINGE A BARRIER RAIL MODIFICATIONS	TH	AB	25S1
1	01/28/08	HINGE A BARRIER RAIL MODIFICATIONS	TH	AS	25S1

REVISIONS

3 REVISION 3 SUPERSEDES REVISIONS 1 & 2

ALL DIMENSIONS ARE IN MILLIMETERS UNLESS OTHERWISE SHOWN

R. Vallzadeh/V. Tsan/Y.L./N.L./F.C.
DESIGN OVERSIGHT
SIGN OFF DATE 03/28/11

Rev. Date: 5-18-98

	BY	CHECKED
DESIGN	T. Ha	N. Vo
DETAILS	G. Baker	N. Vo
QUANTITIES	T. Ha	N. Vo

PREPARED FOR THE STATE OF CALIFORNIA DEPARTMENT OF TRANSPORTATION

R. Manzanarez
PROJECT ENGINEER

BRIDGE NO. 34-0006L/R
KILOMETER POST 13.2/13.9

SAN FRANCISCO OAKLAND BAY BRIDGE
EAST SPAN SEISMIC SAFETY PROJECT
SELF-ANCHORED SUSPENSION BRIDGE
(SUPERSTRUCTURE & TOWER)

BARRIER DETAILS NO. 6

ORIGINAL SCALE IN MILLIMETERS FOR REDUCED PLANS 0 10 20 30 40 50 60 70 80 90 100

CU 04
EA 0120F1

DISREGARD PRINTS BEARING EARLIER REVISION DATES 01/06/02 01/07/02 12/06/02 07/11/03

REVISION DATES (PRELIMINARY STAGE ONLY)

SHEET 477R4 OF

FILE => L:\BB\04-012001\SAS\Contract Plans and CCO\CCO\CCO#25S1\B-Updated 11-15-11\DGN\akbar05.dgn

USERNAME => arivero DATE PLOTTED => 15 NOV 2011 TIME PLOTTED => 11:31:47

DIST.	COUNTY	ROUTE	KILOMETER POST TOTAL PROJECT	SHEET NO.	TOTAL SHEETS
04	SF	80	13.2/13.9	894SIRI	1204

REGISTERED ENGINEER - CIVIL

10-22-10
PLANS APPROVAL DATE

The State of California or its officers or agents shall not be responsible for the accuracy or completeness of electronic copies of this plan sheet.

REGISTERED PROFESSIONAL ENGINEER Tien Hung Ho No. C 43990 Exp. 06/30/11 CIVIL STATE OF CALIFORNIA

T.Y. LIN / MOFFATT & NICHOL
825 BATTERY STREET
SAN FRANCISCO, CA 94111

Caltrans now has a web site! To get to the web site, go to: http://www.dot.ca.gov

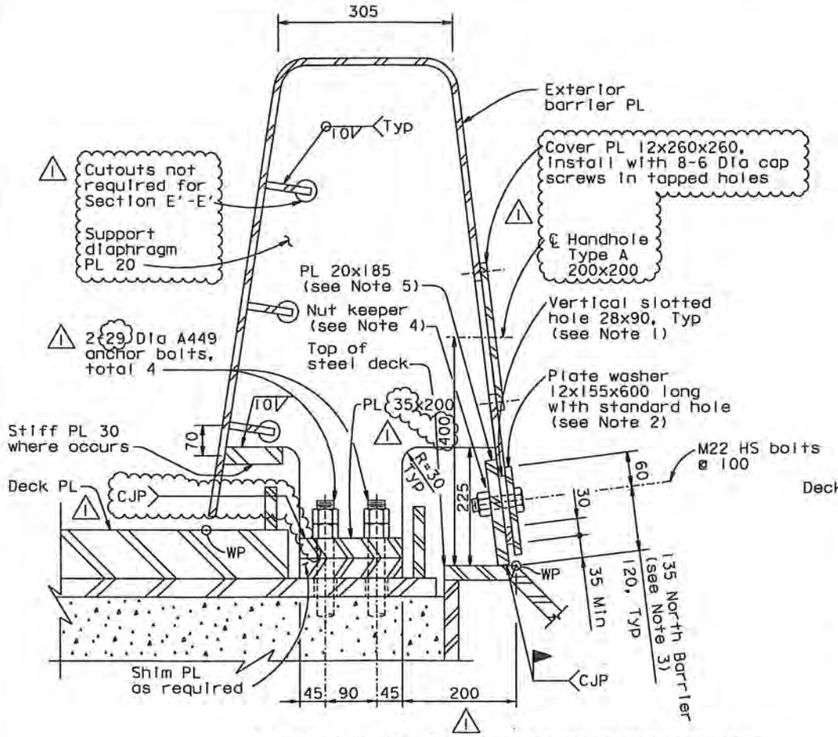

SECTION E-E (Shown, Section E'-E' similar)
1:5

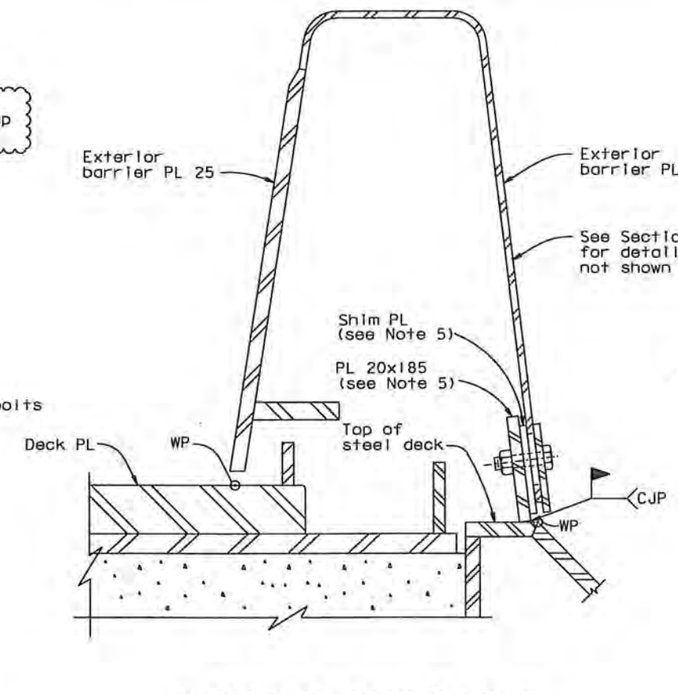

ALTERNATE SECTION D-D
1:5

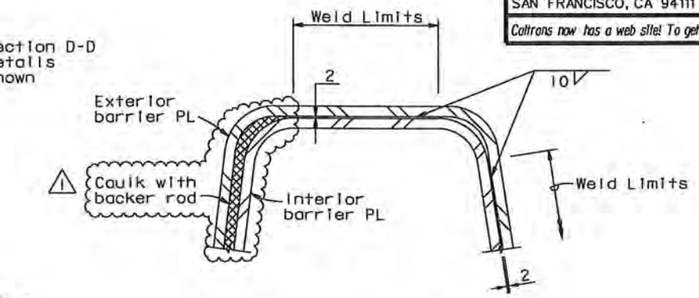

SECTION H-H
NTS

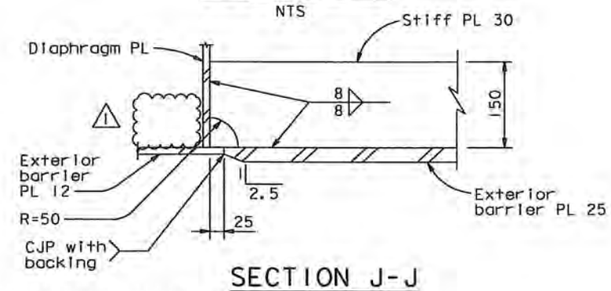

SECTION J-J
1:5

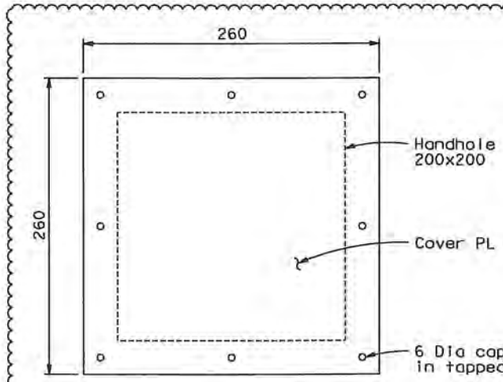

BARRIER HANDHOLE TYPE A
1:2.5

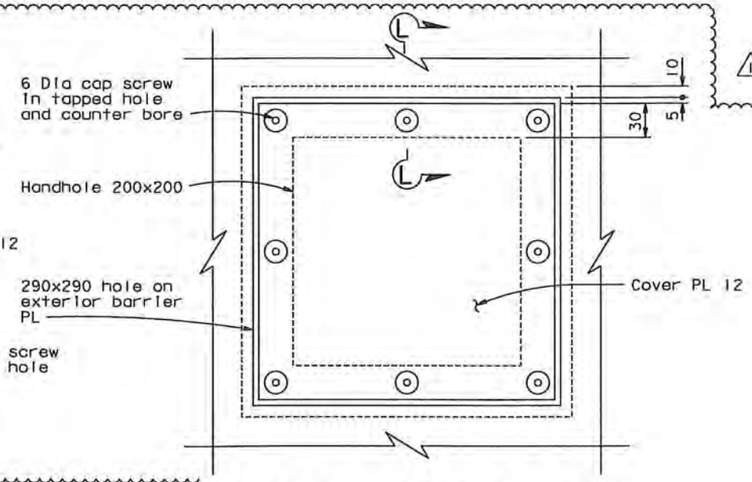

BARRIER HANDHOLE TYPE B
1:2.5

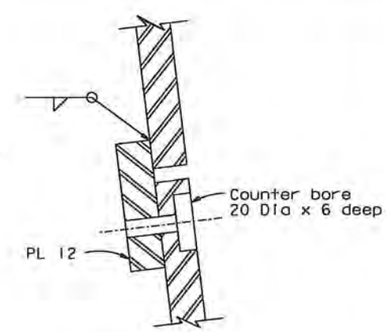

SECTION L-L
1:1

NOTES:

1. Adjust barrier as necessary utilizing the oversized slot and field weld to achieve required minimum barrier height over riding surface per "Barrier Details No.5" and "Barrier Details No.5A" Sheets.
2. The plate washer shall be inverted as required to seal the slotted holes when the bolt is moved up or down in the slotted hole.
3. North barrier and South barrier on SAS shall be set 25 mm and 10 mm higher respectively with the M22 bolt centered in the slotted hole.
4. For nut keeper details, see "West Jacking Frame Details No.1" sheet.
5. Plate may be installed in segments. Insert shim plate as necessary to compensate for horizontal misalignment between Skyway and SAS.

CONTRACT CHANGE ORDER NO. 25S1
SHEET 5 OF 5

REQUESTS FOR INFORMATION NOT ADDRESSED IN THIS CCO REMAIN IN FORCE

ALL DIMENSIONS ARE IN MILLIMETERS UNLESS OTHERWISE SHOWN

R. Vallizadeh/V. Toan/Y.L./W.L./F.C.
DESIGN OVERSIGHT
Roya Vallizadeh / Vong Toan / Y. Liu
SIGN OFF DATE 03/25/11

MARK	DATE	DESCRIPTIONS	BY	CH'D	CCO#
1	03/25/11	HINGE A BARRIER RAIL MODIFICATIONS	TH	GB	25S1
0	10/22/10	HINGE A BARRIER RAIL MODIFICATIONS	TH	GB	25S1

REVISIONS

	BY	CHECKED
DESIGN	T. Ho	G. Baker
DETAILS	H. Patel	T. Ho
QUANTITIES	H. Patel	J. Duxbury

PREPARED FOR THE STATE OF CALIFORNIA DEPARTMENT OF TRANSPORTATION

R. Manzanarez
PROJECT ENGINEER

BRIDGE NO. 34-0006L/R
KILOMETER POST 13.2/13.9

SAN FRANCISCO OAKLAND BAY BRIDGE
EAST SPAN SEISMIC SAFETY PROJECT
SELF-ANCHORED SUSPENSION BRIDGE
(SUPERSTRUCTURE & TOWER)

BARRIER DETAILS NO. 6A

Rev. Date: 5-18-98

ORIGINAL SCALE IN MILLIMETERS FOR REDUCED PLANS 0 10 20 30 40 50 60 70 80 90 100

CU 04
EA 0120F1

DISREGARD PRINTS BEARING EARLIER REVISION DATES 10/22/10

REVISION DATES (PRELIMINARY STAGE ONLY)

SHEET 477SIRI OF

FILE => I:\bb\04-012001\sas\contract plans and cco\cco\cco#25s1\7-revision 03-25-11\dgn\akbar05a.dgn

100 % PS&E

USERNAME => DWinrow DATE PLOTTED => 24 MAR 2011 TIME PLOTTED => 12:54:58

CONTRACT CHANGE ORDER

Change Requested by: Engineer

CCO: 26 Suppl. No. 0 Contract No. 04 – 0120F4 Road SF-80-13.2/13.9 **FED. AID LOC.:**

To: **AMERICAN BRIDGE/FLUOR ENTERPRISES INC A JOINT VENTURE**

You are directed to make the following changes from the plans and specifications or do the following described work not included in the plans and specifications for this contract. ***NOTE: This change order is not effective until approved by the Engineer.***

Description of work to be done, estimate of quantities and prices to be paid. (Segregate between additional work at contract price, agreed price and force account.) Unless otherwise stated, rates for rental of equipment cover only such time as equipment is actually used and no allowance will be made for idle time. This last percentage shown is the net accumulated increase or decrease from the original quantity in the Engineer's Estimate.

This change order:

- Eliminates contract Item #102, "WIND VORTEX GENERATOR PLATES," and revises Section 10-1.85, "WIND VORTEX GENERATOR PLATES" of the Special Provisions, to address the material change from Acrylic Plexiglas G to 13 mm steel plates, storage, and installation.
- Provides for cleaning and painting wind vortex generator plates, in accordance with Section 10-1.69 "CLEAN AND PAINT STRUCTURAL STEEL" of the Special Provisions.
- Revises contract plan sheets 874 and 875 (of 1204) as shown on sheets four through five of this change order to addressed changes.
- Resolves costs associated with Contractor Request For Change (RFC) No. 13R1 with respect to changes listed above are resolved by this change order.

Decrease in Contract Item at Contract Unit Price:

ITEM 1.

Eliminate the Acrylic Plexiglas G plates as shown in contract Item #102, "WIND VORTEX GENERATOR PLATES."

Item No. 102: WIND VORTEX GENERATOR PLATES
-82 EA (-100.00%) @ $9,000.00 /EA = <$738,000.00> (-100.00%)

In accordance with Section 4-1.03B(3), "Eliminated Items," of the Standard Specifications, the adjustment due to the elimination of Item #102, "WIND VORTEX GENERATOR PLATES," is zero.

Total Decrease in Contract Item at Contract Unit Price..... <$738,000.00>

Adjustment of Compensation at Lump Sum Price:

ITEM 2.

Revise Section 10-1.85, "WIND VORTEX GENERATOR PLATES" of the Special Provisions as shown on sheet 3 of this change order.

For the change in character to supply and store the 13 mm steel plating in lieu of Acrylic Plexiglas G plates, and for erecting the wind vortex generator plates as shown on revised plan sheets 874R1 and 875R4, the Contractor agrees to accept the sum of $1,738,000.00. This sum constitutes full and complete compensation for furnishing all labor, material, tools and incidentals including all markups, all direct and indirect costs, all overhead expenses, and all associated project impacts by reason of installing these plates.

It is agreed that the lump sum includes storage of the wind vortex generator plates until July 31, 2011. If storage is required beyond this date, said cost of storage until installation shall be compensated under a supplement to this change order.

Adjustment of Compensation at Lump Sum Price.....$1,738,000.00

CONTRACT CHANGE ORDER

Change Requested by: Engineer

CCO: 26 Suppl. No. 0 Contract No. 04 – 0120F4 Road SF-80-13.2/13.9 **FED. AID LOC.:**

Adjustment of Compensation at Lump Sum Price:

ITEM 3.

The items identified above in this change order have been paid as part of CCO 108 resolution. Therefore, the amount due under this change order will be adjusted by the amount paid under CCO 108 to prevent a double payment. Total amount paid under CCO 108, and to be credited to this change, is $1,000,000.00.

Adjustment of Compensation at Lump Sum Price..... <$1,000,000.00>

CHANGE ORDER COST AND TIME SUMMARY

(ITEM 1) Elimination of Contract Item No. 102, "WIND VORTEX GENERATOR PLATES"	<$738,000.00>
(ITEM 2) Adjustment of Compensation for work pursuant to this change order	$1,738,000.00
Sub-total (ITEM 1 & 2), net value of this change order	$1,000,000.00
(ITEM 3) Amount paid under CCO 108 for this change order	<$1,000,000.00>

Total net pay for this change order..... $0.00

Contract time is addressed in CCO 108 for all work identified in this change order. Therefore, contract time will not be adjusted in this change order.

Estimated Cost: Increase ☒ **Decrease** ☐ **$0.00**

By reason of this order the time of completion will be adjusted as follows: 0 days

Submitted by

Signature BBoal **Resident Engineer** Brian Boal for Gary Pursell, Sup. T.E. **Date** 3FEB2010

Approval Recommended by

Signature Gary Pursell **Supervising Transportation Engineer** Gary Pursell, Sup. T.E. **Date** 2/3/10

Engineer Approval by

Signature Peter Siegenthaler **Principal Transportation Engineer** Peter Siegenthaler, Prin. T.E. **Date** 2/23/10

We the undersigned contractor, have given careful consideration to the change proposed and agree, if this proposal is approved, that we will provide all equipment, furnish the materials, except as otherwise be noted above, and perform all services necessary for the work above specified, and will accept as full payment therefor the prices shown above.

NOTE: If you, the contractor, do not sign acceptance of this order, your attention is directed to the requirements of the specifications as to proceeding with the ordered work and filing a written protest within the time therein specified.

Contractor Acceptance by

Signature (Print name and title) Michael D. Flowers Project Director **Date** 2-22-10

Revised Special Provisions.

10-1.85 WIND VORTEX GENERATOR PLATES

This work shall consist of furnishing, ~~packaging and delivering~~ and erecting wind vortex generator plates ~~manufactured from transparent Acrylic Plexiglas G plates~~ as shown on the plans, as specified in these special provisions, and as directed by the Engineer. ~~Installation of the wind vortex generator plates will not be required.~~ Wind vortex generator plates shall ~~be manufactured from transparent Acrylic Plexiglas G or equal conforming to Federal Standard LP-391, Type 1, Grade C. The Contractor shall furnish to the Engineer a Certificate of Compliance, in conformance with the provisions in Section 6-1.07, "Certificates of Compliance," of the Standard Specifications, for wind vortex generator plates. The certificate shall state that the wind vortex generator plates meet the requirements of Federal Standard LP-391, Type 1, Grade C. Certificates shall be submitted at least two months prior to delivery of the wind vortex generator plates.~~ conform to Section 55 "Steel Structures" of the Standard Specifications.

~~Surfaces cut during manufacture shall be machined. Edges and corners shall be machined to a radius of 2 mm. Holes shall be drilled and drilled hole edges machined to a radius of 2 mm. Drilled holes and all machined surfaces shall be finished to ANSI 2000.~~

Clean and paint Wind vortex generator plates and connection plates in accordance with Section 10-1.69, "CLEAN AND PAINT STRUCTURAL STEEL," of these special provisions.

~~The Contractor shall deliver the manufactured wind vortex generator plates to the Engineer at a location to be determined by the Engineer. Said location will be within 25 km of the San Francisco-Oakland Bay Bridge Toll Plaza. Wind vortex generator plates shall be delivered to the Engineer within six months prior to completion of the work. The Contractor shall notify the Engineer in writing at least two months prior to delivery of wind vortex generator plates.~~

~~Wind vortex generator plates shall be packaged in boxes for protection against physical damage and exposure during shipping and storage. Each wind vortex generator plate within a package shall be protected to prevent damage from adjacent wind vortex generator plates. Wind vortex generator plates shall be packaged to prevent shifting during shipping. The shipping package shall be clearly marked with a statement that the package contains wind vortex generator plates for the San Francisco-Oakland Bay Bridge, the number of wind vortex generator plates contained in the package, the weight of the package, and the date packaged.~~

MEASUREMENT AND PAYMENT

Wind vortex generator plates will be paid for on a lump sum basis.. ~~measured by the unit.~~ The contract ~~unit~~ lump sum price paid for wind vortex generator plates ~~shall~~ includes full compensation for furnishing all labor, materials, tools, equipment and incidentals, and for doing all the work involved in ~~manufacturing~~ fabricating, cleaning and painting, furnishing, ~~and delivering~~ storing and erecting wind vortex generator plates ~~to the location as specified by the Engineer,~~ including packaging and protecting from damage, as shown on the plans, as specified in the Standard Specifications and these special provisions, and as directed by the Engineer. Additional shop expenses sustained by the State beyond 480 air line kilometers from both Sacramento and Los Angeles as shown in Section 55-4.02, "STEEL STRUCTURES," subsection "MEASUREMENT AND PAYMENT," subsection "PAYMENT," shall not apply. A Manufacturing and Fabrication Self-Qualification Audit (MSFQA) as required under Section 8-4.01, "AUDITS," of these special provisions shall not apply.

REGISTERED PROFESSIONAL ENGINEER
BRIAN BOAL
No. 44647
Exp. 3-31-10
CIVIL
STATE OF CALIFORNIA

DIST.	COUNTY	ROUTE	KILOMETER POST TOTAL PROJECT	SHEET NO.	TOTAL SHEETS
04	SF	80	13.2/13.9	874R1	1204

REGISTERED ENGINEER - CIVIL

12-6-04

PLANS APPROVAL DATE

The State of California or its officers or agents shall not be responsible for the accuracy or completeness of electronic copies of this plan sheet.

REGISTERED PROFESSIONAL ENGINEER Marwan N. Nader No. C 054426 Exp. 12/31/07 CIVIL STATE OF CALIFORNIA

T.Y. LIN / MOFFATT & NICHOL
825 BATTERY STREET
SAN FRANCISCO, CA 94111

Caltrans now has a web site! To get to the web site, go to: http://www.dot.ca.gov

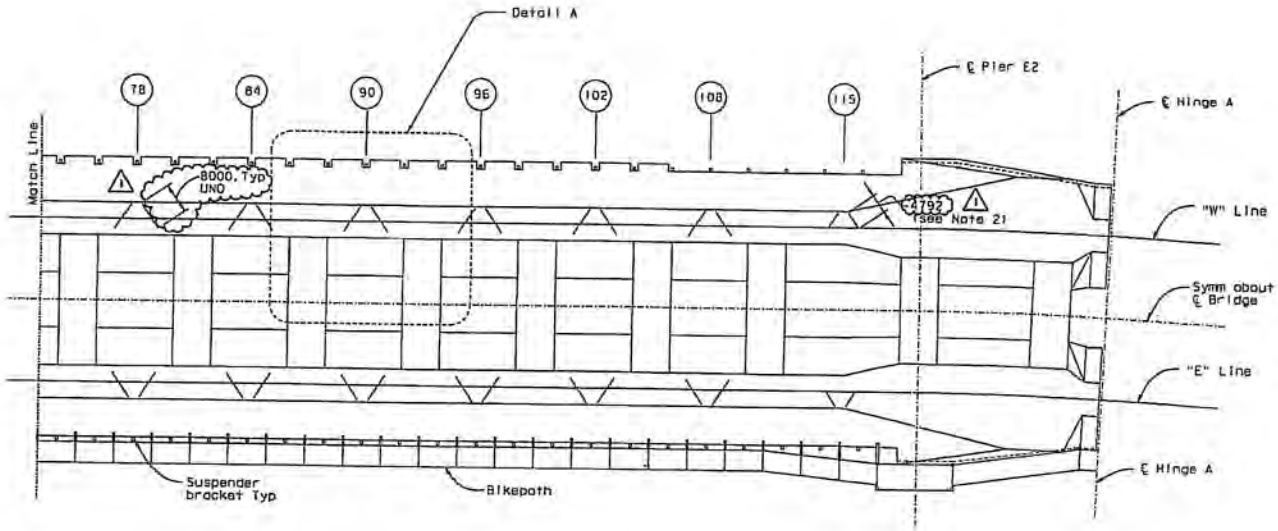

REFLECTED PLAN

1:600

MARK	DATE	DESCRIPTIONS	BY	CH'D	CCO#
1	07/26/07	WIND VORTEX GENERATOR PLATES	CC	MN	26

REVISIONS

CONTRACT CHANGE ORDER NO. 26
SHEET 4 OF 5

NOTES:

1. For Detail A, see "Wind Vortex Generator Plates Details" sheet.
2. To clear traveler rails, 6 plates shall be installed at four locations at panel point 115. For layout of vortex generator plates, see "Wind Vortex Generator Plates Details" sheet.

ALL DIMENSIONS ARE IN MILLIMETERS UNLESS OTHERWISE SHOWN

R. Vallizadeh/V. Toan/Y.L./W.L./F.C.
DESIGN OVERSIGHT
Roya Vallizadeh / Vinod Toan / Y. Liu
STOW OFF DATE 07/26/07
Rev. Date 3-18-98

DESIGN BY M. Nader CHECKED C. Selm
DETAILS BY G. Baker CHECKED R. Donikian
QUANTITIES BY C. Mibelli CHECKED J. Lopez-Jara

PREPARED FOR THE STATE OF CALIFORNIA DEPARTMENT OF TRANSPORTATION

R. Manzanarez
PROJECT ENGINEER

BRIDGE NO. 34-0006L/R
KILOMETER POST 13.2/13.9

SAN FRANCISCO OAKLAND BAY BRIDGE
EAST SPAN SEISMIC SAFETY PROJECT
SELF-ANCHORED SUSPENSION BRIDGE
(SUPERSTRUCTURE & TOWER)

WIND VORTEX GENERATOR PLATES LAYOUT NO. 2

ORIGINAL SCALE IN MILLIMETERS FOR REDUCED PLANS 0 10 20 30 40 50 60 70 80 90 100

CU 04
EA 0120F1

DISREGARD PRINTS BEARING EARLIER REVISION DATES

REVISION DATES (PRELIMINARY STAGE ONLY) SIGNED SIGNED UNSIGNED

SHEET 457R1 OF

FILE =S:\11\CO\04-0120F1\SGS\contract plans and cco\cco\cco-26\revision 01-09-09\gn\pkwy002.dgn

DISTRIBUTION: =1 Caltrans DATE PLOTTED => 16 JUN 2009 TIME PLOTTED => 10:44:40

100 % PSAI

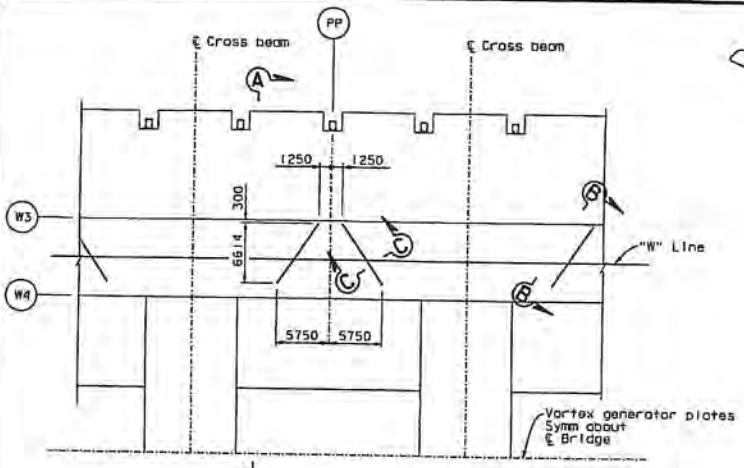

A DETAIL A

TYPICAL LAYOUT OF VORTEX GENERATOR PLATES

1:250

("W" Line shown, "E" Line similar)

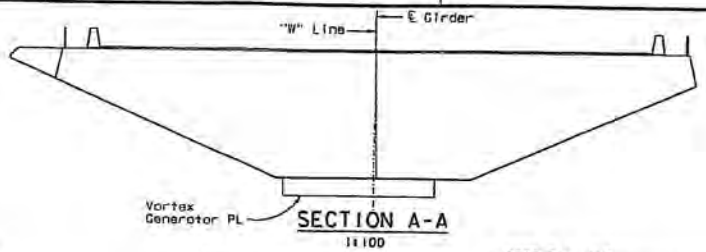

SECTION A-A

1:100

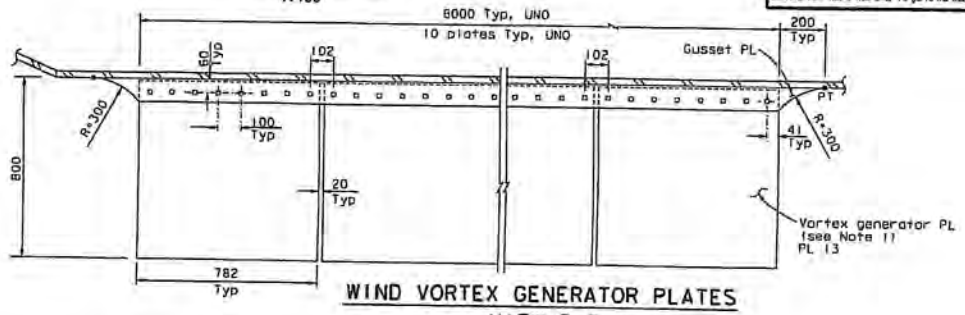

WIND VORTEX GENERATOR PLATES

VIEW B-B

1:10

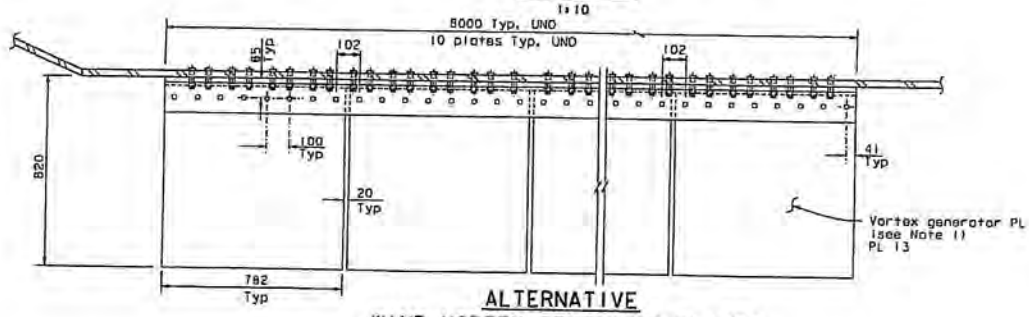

ALTERNATIVE

WIND VORTEX GENERATOR PLATES

VIEW B-B

1:10

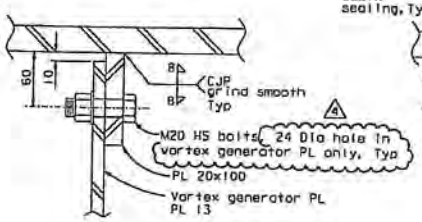

SECTION C-C

1:2.5

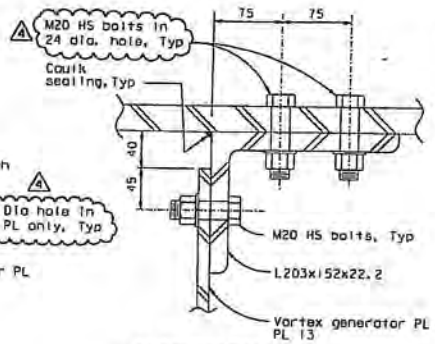

ALTERNATIVE SECTION C-C

1:2.5

NOTES:

1. A total of 704 vortex generator steel plates shall be fabricated and erected.
2. M20 HS bolts connecting L203x152x22.2 and box girder plate shall clear box girder stiffeners.
3. Installation of vortex generator steel plates shall not interfere with required clearances during construction of the bridge.

CONTRACT CHANGE ORDER NO. 26
SHEET 5 OF 5

REQUESTS FOR INFORMATION NOT ADDRESSED IN THIS CCO REMAIN IN FORCE

MARK	DATE	DESCRIPTIONS	BY	CH'D	CCO#
4	01/16/09	WIND VORTEX GENERATOR PLATES	GB	MN	26
3	01/06/09	CAULKING	AS	MN	66
2	06/30/08	WIND VORTEX GENERATOR PLATES	JD	MN	26
1	03/26/08	WIND VORTEX GENERATOR PLATES	CC	MN	26

REVISIONS

R. Vallzoden/V. Toon/Y.L./M.L./F.C.
DESIGN OVERSIGHT
Rex Vallzoden/V. Toon/Y. Liu
SIGN OFF DATE 01/16/09

Rev. Date 8-13-98

DESIGN	BY W. Nader	CHECKED C. Solm
DETAILS	BY G. Baker	CHECKED J. Lopez-Jara
QUANTITIES	BY C. Mibelli	CHECKED J. Lopez-Jara

ORIGINAL SCALE IN MILLIMETERS FOR REDUCED PLANS 0 10 20 30 40 50 60 70 80 90 100

PREPARED FOR THE
STATE OF CALIFORNIA
DEPARTMENT OF TRANSPORTATION

ALL DIMENSIONS ARE IN MILLIMETERS UNLESS OTHERWISE SHOWN

R. Wanzenaroz
PROJECT ENGINEER

CU 04
EA D120F1

BRIDGE NO. 34-0006L/R
KILOMETER POST 13.2/13.9

SAN FRANCISCO OAKLAND BAY BRIDGE
EAST SPAN SEISMIC SAFETY PROJECT
SELF-ANCHORED SUSPENSION BRIDGE
(SUPERSTRUCTURE & TOWER)

WIND VORTEX GENERATOR PLATES DETAILS

DISREGARD PRINTS BEARING EARLIER REVISION DATES

REVISION DATES (PRELIMINARY STAGE ONLY)
01/16/09 01/06/09 01/26/08

SHEET 458R4 OF

FILE => f:\bb\04-012001\sas\contract plans and ccos\ccos\cco#26\revision 01-09-09\gbrdwwg03.dgn

DIST.	COUNTY	ROUTE	KILOMETER POST TOTAL PROJECT	SHEET NO.	TOTAL SHEETS
04	SF	80	13.2/13.9	875R4	1204

REGISTERED ENGINEER - CIVIL
12-6-04
PLANS APPROVAL DATE
Marwan H. Nader
No. C 054426
Exp. 12/31/09
CIVIL
STATE OF CALIFORNIA
REGISTERED PROFESSIONAL ENGINEER

The State of California or its officers or agents shall not be responsible for the accuracy or completeness of electronic copies of this plan sheet.

T.Y. LIN / MOFFATT & NICHOL
825 BATTERY STREET
SAN FRANCISCO, CA 94111

Caltrans now has a web site! To go to the web site, go to: http://www.dot.ca.gov

Caltrans Metric

100 % PSSE

DATE PLOTTED => 16 JAN 2009 TIME PLOTTED => 10:46:47

USERNAME => DeWitt

STATE OF CALIFORNIA - DEPARTMENT OF TRANSPORTATION

CONTRACT CHANGE ORDER MEMORANDUM

DC-CEM-4903 (OLD HC-39 REV. 6/93) CT# 7541-3544-0

DATE: 3/1/2010

TO Pete Siegenthaler, Principal TE	FILE 04-0120F4 04-SF-80-13.2/13.9
FROM Gary Pursell, STE / Richard Morrow, SBE	
CCO NO. **26** / SUPPLEMENT NO. **0** / CATEGORY CODE **CHPT**	CONTINGENCY BALANCE (including this change) **$8,014,909.40**
$0.00 INCREASE ☐ DECREASE ☐	HEADQUARTERS APPROVAL REQUIRED? YES ☒ NO ☐
SUPPLEMENTAL FUNDS PROVIDED $	IS THIS REQUEST IN ACCORDANCE WITH ENVIRONMENTAL DOCUMENTS? YES ☒ NO ☐
CCO DESCRIPTION: Wind Vortex Generator Plates	**PROJECT DESCRIPTION** CONSTRUCT SELF-ANCHORED SUSPENSION BRIDGE

Original Contract Time	Time Adj.: This Change	Previously Approved CCO Time Adjustments	Percentage Time Adjusted: (including this change)	Total # of Unreconciled Deferred Time CCO(s): (including this change)
2490 Day(s)	**0** Day(s)	**227** Day(s)	**9** %	**6**

THIS CHANGE ORDER PROVIDES FOR:

1. Eliminating contract Item #102, "WIND VORTEX GENERATOR PLATES," and revises Section 10-1.85, "WIND VORTEX GENERATOR PLATES" of the Special Provisions, to address the material change from Acrylic Plexiglas G to 13 mm steel plates, storage, and installation.
2. Cleaning and painting wind vortex generator plates, in accordance with Section 10-1.69 "CLEAN AND PAINT STRUCTURAL STEEL" of the Special Provisions.
3. Revising contract plan sheets 874 and 875 (of 1204 to address changes.
4. Resolving costs associated with Contractor Request For Change (RFC) No. 13R1 with respect to changes listed above are resolved by the change order.

The consultant designers, design oversight, and Structures Maintenance concur that the Plexiglas wind vortex generator plates will degrade over time from exposure to ultra-violet light. This change replaces the Plexiglas material specified with steel, addresses requirements for cleaning and painting the steel, and provides for installing the plates not originally included in the contract plans.

The contract price of Contract Item No. 102, Wind Vortex Generator Plates, shall be eliminated to reflect the material change. The elimination of this contract item results in a credit to the Department for <$738,000.00>. The contract documents do not provide for painting and installing the steel Wind Vortex Generator Plates and this work is not covered by any contract items. Therefore payment for this work will be at Adjustment of Compensation at Lump Sum Price for the amount of $1,738,000.00, which can be financed from the contingency fund. The net sum cost of this change is $1,000,000.00, which has been covered under the Claim Settlement Report No. 1 resolution costs included in Contract Change Order 108 Supplement 1 (CCO 108S1). Therefore, the net payment under this change order is zero.

A determination of the delay in completion of the contract due to work specified by Contract Change Order No. 26, has been made in accordance with the resolution of time and costs in CCO 108 and is part of the Claims Settlement Report (CSR) No. 1 for this project. Therefore, no adjustment of time is warranted by reason of this change.

This change order received concurrence from Gary Pursell (Resident Engineer), Rick Morrow (Sup. Structure Rep), Peter Siegenthaler (Principal TE), Rich Foley (HQ Oversight), Ken Terpstra (Project Manager), Richard Land (Chief Engineer), Jon Tapping (HQ Coordinator), Tony Anziano (Toll Bridge Program Manager), Brian Maroney (Project Engineer), Marwan Nader (Designer of Record), Wenyi Long (Design Oversight), and Lina Ellis (Structure Maintenance).

This change order received an Authority to Proceed (ATP) on August 17, 2007 (a copy is attached for reference).

Claims Settlement Report (CSR) No. 1 for this project revises the authority to "Issue and Approve" the changes listed in CCO 108S1 Appendices A & B. The authority to "Issue and Approve" the changes listed in Appendices A & B for the values of time and money contemplated therein has been delegated to the District for approval and approval of each of these change orders by the Headquarters CCO Desk will not be required. Since this change order is included in CCO 108S1 no Headquarters CCO Desk "Issue and Approve" is required, a copy of CCO 108S1 is attached for reference.

CONTRACT CHANGE ORDER MEMORANDUM

DC-CEM-4903 (OLD HC-39 REV. 6/93) CT# 7541-3544-0

DATE: 3/1/2010

CONCURRED BY:	
CONSTRUCTION ENGINEER Res. Eng. Gary Pursell	DATE 8/09/07
SR. BRIDGE ENGINEER Rick Morrow	DATE 8/09/07
FHWA REPRESENTATIVE	DATE
PROJECT MANAGER Proj. Manager, Ken Terpstra	DATE 8/14/07
OTHER (SPECIFY)	DATE
Chief Engineer, Richard Land	12/21/09
HQ Toll Bridge Coordinator, Jon Tapping	12/21/09
Toll Bridge Program Manager, Tony Anziano	12/21/09
Project Engineer, Brian Maroney	7/17/07
HQ, Rich Foley	8/09/07
Designer of Record, Marwan Nader	7/13/07
Design Oversight, Wenyi Long	8/01/07
Structure Maintenance, Lina Ellis	7/31/07
PCE, Peter Siegenthaler, Prin TE	DATE 8/13/07
DISTRICT PRIOR APPROVAL BY	DATE
HQ (ISSUE & APPROVE) (TO PROCEED) BY Bob Molera (ISSUE & APPROVE)	DATE 12/31/09
RESIDENT ENGINEER SIGNATURE Gary Pursell	DATE 3/1/10

ESTIMATE OF COST

	THIS REQUEST	TOTAL TO DATE
ITEMS	<$738,000.00>	<$738,000.00>
FORCE ACCOUNT	$0.00	$0.00
AGREED PRICE	$0.00	$0.00
ADJUSTMENT	$738,000.00	$738,000.00
TOTAL	$0.00	$0.00

FEDERAL PARTICIPATION

☐ PARTICIPATING ☐ PARTICIPATING IN PART ☒ NONE
☐ NON-PARTICIPATING (MAINTENANCE) ☐ NON-PARTICIPATING

FEDERAL SEGREGATION (IF MORE THAN ONE FUNDING SOURCE OR P.I.P. TYPE)
☐ CCO FUNDED PER CONTRACT ☐ CCO FUNDED AS FOLLOWS

FEDERAL FUNDING SOURCE	PERCENT

CONTRACT CHANGE ORDER

Change Requested by: Engineer

CCO: 27 Suppl. No. 0 Contract No. 04 – 0120F4 Road SF-80-13.2/13.9 **FED. AID LOC.:**

To: **AMERICAN BRIDGE/FLUOR ENTERPRISES INC A JOINT VENTURE**

You are directed to make the following changes from the plans and specifications or do the following described work not included in the plans and specifications for this contract. ***NOTE: This change order is not effective until approved by the Engineer.***

Description of work to be done, estimate of quantities and prices to be paid. (Segregate between additional work at contract price, agreed price and force account.) Unless otherwise stated, rates for rental of equipment cover only such time as equipment is actually used and no allowance will be made for idle time. This last percentage shown is the net accumulated increase or decrease from the original quantity in the Engineer's Estimate.

This change order modifies the bearing blocks and provides a larger and re-located access opening for placing bearing blocks, tendon anchors, and pre-stressing jacks (used during the installation of the continuity tendons from W2 to the OBG) as shown on sheets three (3) through eighteen (18) of this change order.

The following revised contract plan sheets and supplemental sheet detail all changes:

466R3, 467R2, 468R3, 469R2, 472R2, 497S25R2, 619R1, 646R1, 665R1, 666R1, 667R1, 668R1, 668S1, 668S2, 669R1 and 670R1 (of 1204).

This change order resolves the costs associated with Contractor Request For Information (RFI) Nos. 255, 207, 222, 241, 277, 277R1, 308, 309, 311, 313R1, 329, 336R1, 337, 340, 346, 381, 424, 497, 522, 537R1, 599, 607, 608, 609, 614 and RFCO No. 6 with respect to changes listed above.

Decrease in Contract Item at Contract Unit Price:

ITEM 1.

Item No. 55: FURNISH STRUCTURAL STEEL (BRIDGE) (BOX GIRDER)
-959 KG (-0.00%) @ $9.00 /KG = -$8,631.00 (+0.63%)

Item No. 56: ERECT STRUCTURAL STEEL (BRIDGE) (BOX GIRDER)
-959 KG (-0.00%) @ $1.00 /KG = -$959.00 (+0.63%)

The quantity decrease shown herein for Item #55, FURNISH STRUCTURAL STEEL (BRIDGE) (BOX GIRDER), and Item #56, ERECT STRUCTURAL STEEL (BRIDGE) (BOX GIRDER), when combined with the quantity shown in the Engineer's Estimate, and as modified by any previous change orders or revisions to dimensions made by the Engineer, shall be the final quantity for which payment will be made.

Total Decrease in Contract Items at Contract Unit Prices..... <$9,590.00>

Adjustment of Compensation at Lump Sum Price:

ITEM 2.

Perform and provide as appropriate all required additional detailing, cutting of openings, installation of trumpets, conflict resolution of RFI's listed above in this change order, mill stiffener plates, and fabricate rings. The revised contract plan sheets and supplemental sheet listed above and provided in this change order detail all changes.

For this work, the Contractor will be paid the sum of $78,141.00. This sum constitutes full compensation, including all markups, for this change.

Adjustment of Compensation at Lump Sum Price..... $78,141.00

Adjustment of Compensation at Lump Sum Price:

ITEM 3.

The items identified above in this change order have been paid as part of CCO 108 resolution. Therefore, the amount due under this change order will be adjusted by the amount paid under CCO 108 to prevent a double payment. Total amount paid under CCO 108, and to be credited to this change, is $68,551.00.

Adjustment of Compensation at Lump Sum Price..... <$68,551.00>

CHANGE ORDER COST AND TIME SUMMARY

(ITEM 1) Decrease in Contract Items at Contract Unit Price	<$9,590.00>
(ITEM 2) Adjustment of Compensation for work pursuant to this change order	$78,141.00
Sub-total (ITEM 1 & 2), net value of this change order	$68,551.00
(ITEM 3) Amount paid under CCO 108 for this change order	<$68,551.00>
Total net pay for this change order.....	$0.00

Contract time is addressed in CCO 108 for all work identified in this change order. Therefore contract time will not be adjusted in this change order.

Estimated Cost: **Increase** ☐ **Decrease** ☐ **$0.00**

By reason of this order the time of completion will be adjusted as follows: 0 days

Submitted by

Signature D Balan **Resident Engineer** for Brian Boal for Gary Pursell, Sup.T.E. **Date** 2-22-10

Approval Recommended by

Signature Gary Pursell **Supervising Transportation Engineer** Gary Pursell, Sup.T.E. **Date** 2/22/10

Engineer Approval by

Signature Gary Pursell **Supervising Transportation Engineer** Gary Pursell, Sup.T.E. **Date** 2/24/10

We the undersigned contractor, have given careful consideration to the change proposed and agree, if this proposal is approved, that we will provide all equipment, furnish the materials, except as otherwise be noted above, and perform all services necessary for the work above specified, and will accept as full payment therefor the prices shown above.

NOTE: If you, the contractor, do not sign acceptance of this order, your attention is directed to the requirements of the specifications as to proceeding with the ordered work and filing a written protest within the time therein specified.

Contractor Acceptance by

Signature Mike Flowers (Print name and title) Michael D. Flowers Project Director **Date** 2-23-10

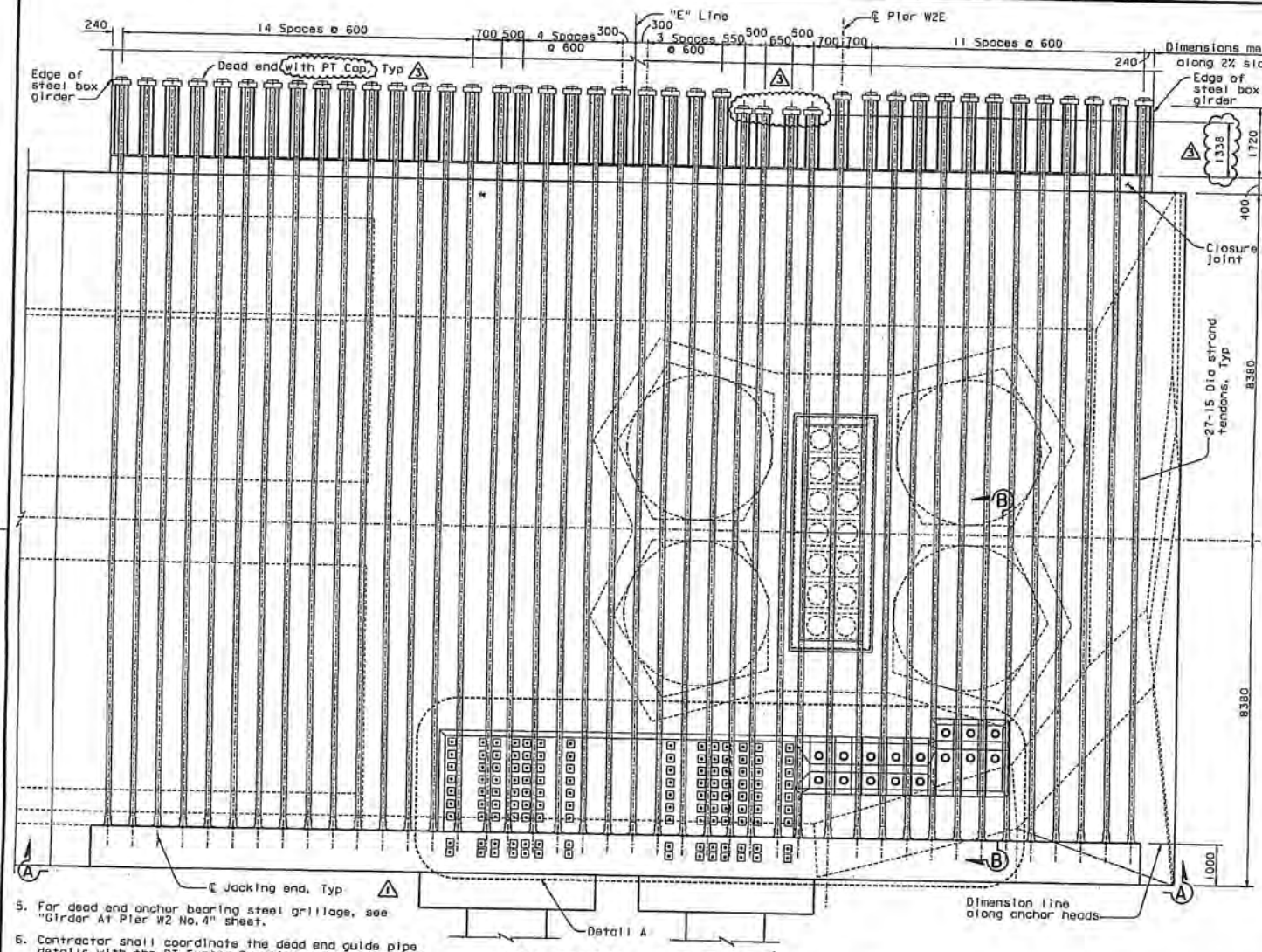

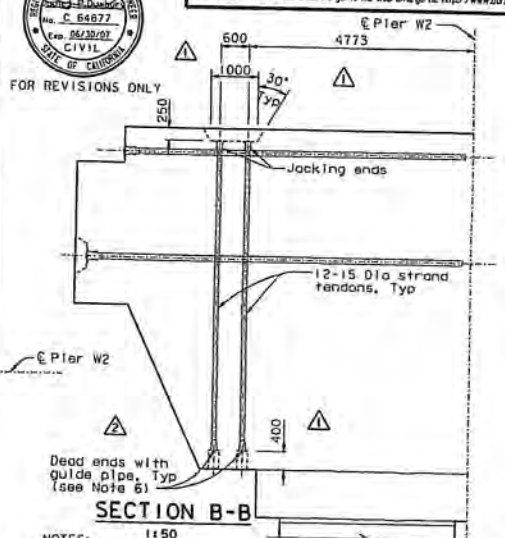

SECTION B-B

1:50

TOP TENDON LAYOUT PLAN ("E" Line)

1:50

5. For dead end anchor bearing steel grillage, see "Girder At Pier W2 No. 4" sheet.
6. Contractor shall coordinate the dead end guide pipe details with the PT System Supplier and shall submit them to the Engineer for review and approval. Contractor shall grout the guide pipe after stressing operations have been completed.

NOTES:

1. For Section A-A, see "W2 Cap Beam Post-Tensioning Details No. 9" sheet.
2. For Detail A, see "W2 Cap Beam Post-Tensioning Details No. 10" sheet.
3. All W2 cap beam continuity tendons are ASTM A416 Grade 270 (fu=1860 MPa), low relaxation, 27-15 Dia seven wire strand PT, unless specified otherwise. For additional prestressing details, see "Prestressing Notes" sheet.
4. For blockout details, see "W2 Cap Beam Blockout Details" sheets.

MARK	DATE	DESCRIPTIONS	BY	CH'D	CCO#
3	02/16/07	BULKHEAD AT GIRDER PIER W2	JD	AS	27
2	01/31/07	CORROSION PROTECTION	JD	AS	16
1	07/21/06	W2 CAP BEAM ISD	JD	NV	23

REVISIONS

CONTRACT CHANGE ORDER NO. 27
SHEET 3 OF 18

ALL DIMENSIONS ARE IN MILLIMETERS UNLESS OTHERWISE SHOWN

DIST.	COUNTY	ROUTE	KILOMETER POST TOTAL PROJECT	SHEET NO.	TOTAL SHEETS
04	SF	80	13.2/13.9	466R3	1204

REGISTERED ENGINEER - CIVIL
12-6-04
PLANS APPROVAL DATE
The State of California or its officers or agents shall not be responsible for the accuracy or completeness of electronic copies of this plan sheet.

REGISTERED PROFESSIONAL ENGINEER John Sun No. C 54648 Exp. 12/31/05 CIVIL STATE OF CALIFORNIA

T.Y. LIN / MOFFATT & NICHOL
825 BATTERY STREET
SAN FRANCISCO, CA 94111

Caltrans now has a web site! To get to the web site, go to: http://www.dot.ca.gov

FOR REVISIONS ONLY

REGISTERED PROFESSIONAL ENGINEER John P. Duxbury No. C 64677 Exp. 06/30/07 CIVIL STATE OF CALIFORNIA

R. Vallzadeh/V. Toan/Y.L./W.L./F.C.
DESIGN OVERSIGHT
SIGN OFF DATE 02/16/07
Rev. Date: 3-18-98

DESIGN	BY J. Sun	CHECKED	M. Chen
DETAILS	BY J. Duxbury	CHECKED	M. Chen
QUANTITIES	BY S. Shi	CHECKED	D. Harrison

ORIGINAL SCALE IN MILLIMETERS FOR REDUCED PLANS

PREPARED FOR THE STATE OF CALIFORNIA DEPARTMENT OF TRANSPORTATION

R. Manzanarez
PROJECT ENGINEER

BRIDGE NO. 34-0006L/R
KILOMETER POST 13.2/13.9

CU 04
EA 0120F1

SAN FRANCISCO OAKLAND BAY BRIDGE
EAST SPAN SEISMIC SAFETY PROJECT
SELF-ANCHORED SUSPENSION BRIDGE
(SUPERSTRUCTURE & TOWER)

W2 CAP BEAM POST-TENSION DETAILS NO. 5

DISREGARD PRINTS BEARING EARLIER REVISION DATES
REVISION DATES (PRELIMINARY STAGE)
SHEET 049R3

FILE => I:\bb\04-0120F1\sas\contract plans and cco\cco\in progress\cco#27\aacpt05.dgn

USERNAME => visitor DATE PLOTTED => 15 MAR 2007 TIME PLOTTED => 15:51:56

100 % PS&E

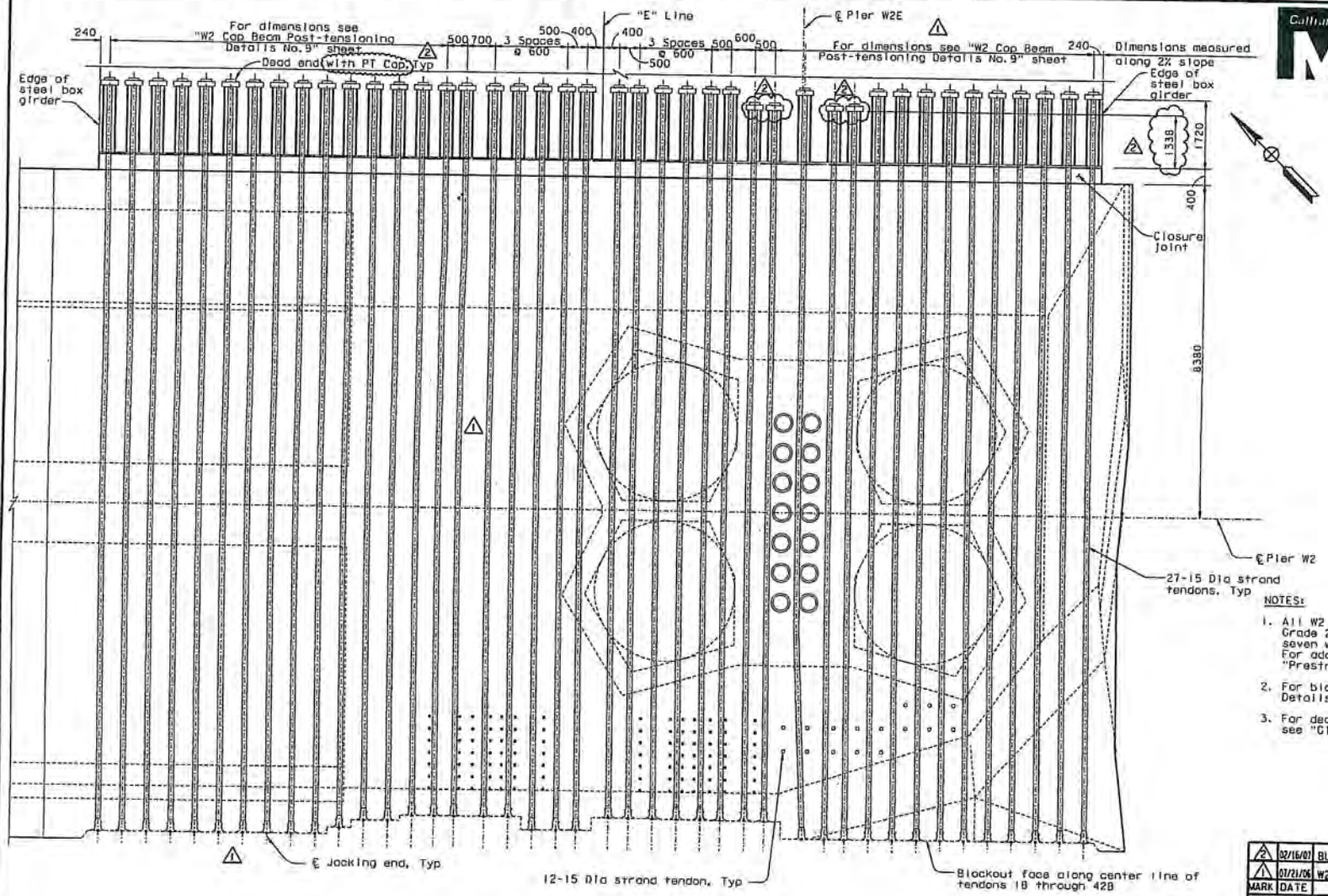

BOTTOM TENDON LAYOUT PLAN ("E Line")

1:50

NOTES:

1. All W2 cap beam continuity tendons are ASTM A416 Grade 270 (fu=1860 MPa), low relaxation, 27-15 Dia seven wire strand PT, unless specified otherwise. For additional prestressing details, see "Prestressing Notes" sheet.
2. For blockout details, see "W2 Cap Beam Blockout Details" sheets.
3. For dead end anchor bearing steel grillage, see "Girder At Pier W2 No. 4" sheet.

DIST.	COUNTY	ROUTE	KILOMETER POST TOTAL PROJECT	SHEET NO.	TOTAL SHEETS
04	SF	80	13.2/13.9	467R2	1204

REGISTERED ENGINEER - CIVIL

12-6-04

PLANS APPROVAL DATE

REGISTERED PROFESSIONAL ENGINEER John Sun No. C 54648 Exp. 12/31/05 CIVIL STATE OF CALIFORNIA

The State of California or its officers or agents shall not be responsible for the accuracy or completeness of electronic copies of this plan sheet.

T.Y. LIN / MOFFATT & NICHOL
825 BATTERY STREET
SAN FRANCISCO, CA 94111

Caltrans now has a web site! To get to the web site, go to: http://www.dot.ca.gov

REGISTERED PROFESSIONAL ENGINEER Patrick D. Duxbury No. C 64677 Exp. 06/30/07 CIVIL STATE OF CALIFORNIA

FOR REVISIONS ONLY

MARK	DATE	DESCRIPTIONS	BY	CH'D	CCO#
2	02/16/07	BULKHEAD AT GIRDER PIER W2	JD	AS	27
1	07/21/06	W2 CAP BEAM ISD	JD	NV	23

REVISIONS

CONTRACT CHANGE ORDER NO. 27
SHEET 4 OF 18

100 % PS&E

TIME PLOTTED => 15:36:07
DATE PLOTTED => 15 MAR 2007
USERNAME => v107ar

ALL DIMENSIONS ARE IN MILLIMETERS UNLESS OTHERWISE SHOWN

R. Vallizadeh/V. Toon/Y.L./N.L./F.C.
DESIGN OVERSIGHT
SIGN OFF DATE 02/16/07
Rev. Date: 3-13-02

DESIGN	BY J. Sun	CHECKED M. Chen	
DETAILS	BY J. Duxbury	CHECKED M. Chen	
QUANTITIES	BY S. Shi	CHECKED O. Harrison	

ORIGINAL SCALE IN MILLIMETERS FOR REDUCED PLANS 0 10 20 30 40 50 60 70 80 90 100

PREPARED FOR THE STATE OF CALIFORNIA DEPARTMENT OF TRANSPORTATION

R. Manzanarez
PROJECT ENGINEER

BRIDGE NO. 34-0006L/R
KILOMETER POST 13.2/13.9
CU D4
EA 0120F1

DISREGARD PRINTS BEARING EARLIER REVISION DATES

REVISION DATES (PRELIMINARY STAGE) 12/20/06 12/21/06 12/22/06 12/27/06 12/29/06

FILE => S:\Projects\04-012001\sas\contract plans and eco\cco\in progress\cco#27\cmcp106.dgn

SAN FRANCISCO OAKLAND BAY BRIDGE
EAST SPAN SEISMIC SAFETY PROJECT
SELF-ANCHORED SUSPENSION BRIDGE
(SUPERSTRUCTURE & TOWER)

W2 CAP BEAM POST-TENSION DETAILS NO. 6

SHEET 050R2 OF

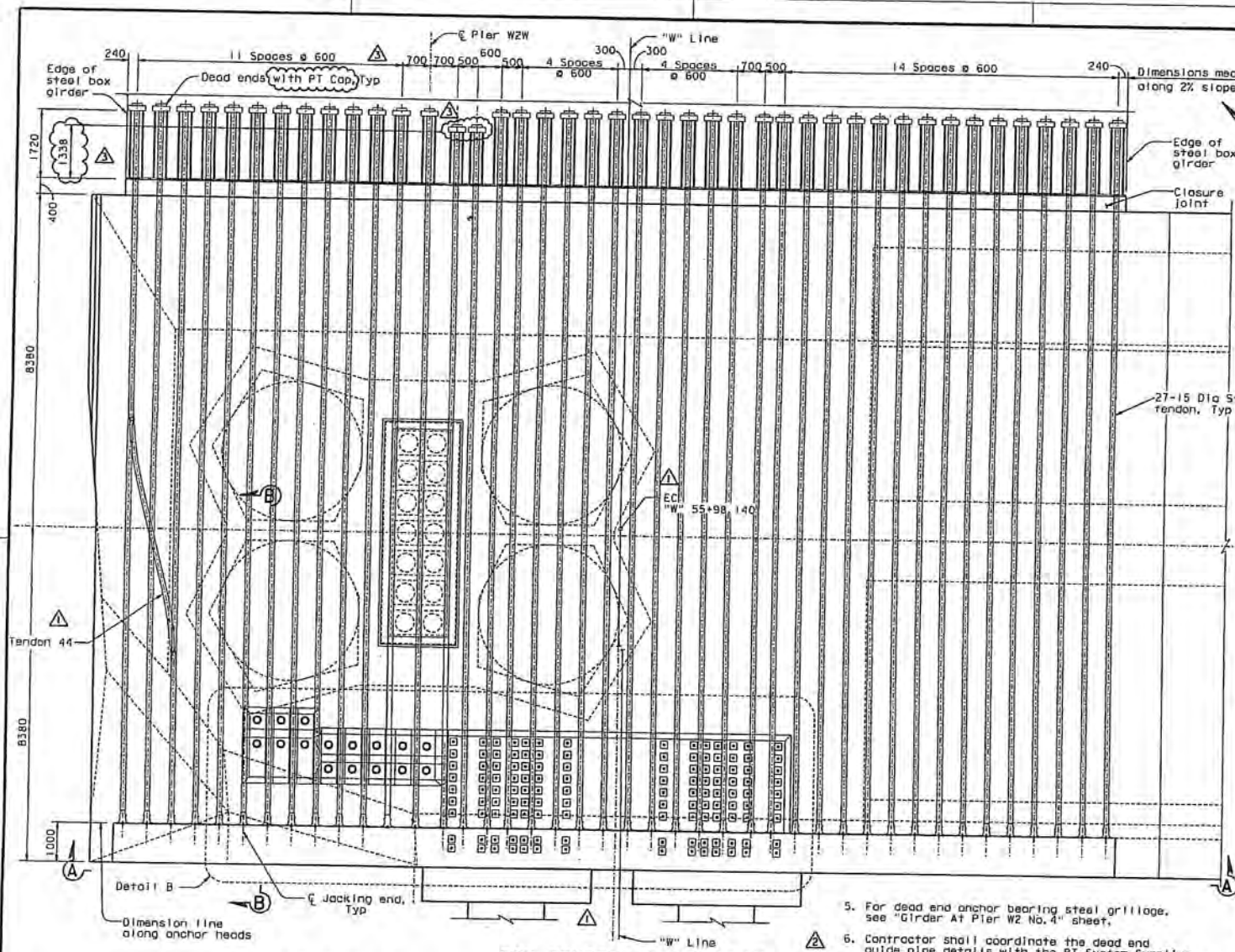

ALL DIMENSIONS ARE IN MILLIMETERS UNLESS OTHERWISE SHOWN

TOP TENDON LAYOUT PLAN ("W" Line)

1:50

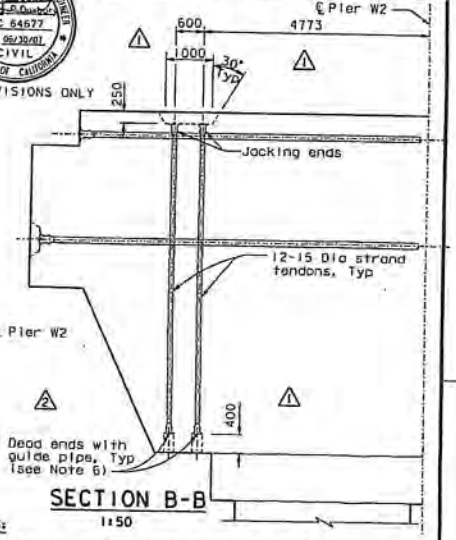

SECTION B-B

1:50

NOTES:

1. For Section A-A, see "W2 Cap Beam Post-Tensioning Details No.9" sheet.
2. For Detail B, see "W2 Cap Beam Post-Tensioning Details No.10" sheet.
3. All W2 cap beam continuity tendons are ASTM A416 Grade 270 (fu=1860 MPa), low relaxation, 27-15 Dia seven wire strand PT, unless specified otherwise. For additional prestressing details, see "Prestressing Notes" sheet.
4. For blockout details, see "W2 Cap Beam Blockout Details" sheets.
5. For dead end anchor bearing steel grillage, see "Girder At Pier W2 No.4" sheet.
6. Contractor shall coordinate the dead end guide pipe details with the PT System Supplier and shall submit them to the Engineer for review and approval. Contractor shall grout the guide pipe after stressing operations have been completed.

MARK	DATE	DESCRIPTIONS	BY	CH'D	CCO#
3	02/15/07	BULKHEAD AT GIRDER PIER W2	JD	AS	27
2	01/31/07	CORROSION PROTECTION	JD	AS	16
1	01/21/06	W2 CAP BEAM ISD	JD	NV	23

REVISIONS

CONTRACT CHANGE ORDER NO. 27
SHEET 5 OF 18

100 % PS&E

DIST.	COUNTY	ROUTE	KILOMETER POST TOTAL PROJECT	SHEET NO.	TOTAL SHEETS
04	SF	80	13.2/13.9	46BR3	1204

REGISTERED ENGINEER - CIVIL
12-6-04
PLANS APPROVAL DATE
REGISTERED PROFESSIONAL ENGINEER John Sun No. C 54648 Exp. 12/31/05 CIVIL STATE OF CALIFORNIA

The State of California or its officers or agents shall not be responsible for the accuracy or completeness of electronic copies of this plan sheet.

T.Y. LIN / MOFFATT & NICHOL
825 BATTERY STREET
SAN FRANCISCO, CA 94111

Caltrans now has a web site! To get to the web site, go to: http://www.dot.ca.gov

REGISTERED PROFESSIONAL ENGINEER Rolf Dudzik No. C 64677 Exp. 06/30/07 CIVIL STATE OF CALIFORNIA
FOR REVISIONS ONLY

SAN FRANCISCO OAKLAND BAY BRIDGE
EAST SPAN SEISMIC SAFETY PROJECT
SELF-ANCHORED SUSPENSION BRIDGE
(SUPERSTRUCTURE & TOWER)

W2 CAP BEAM POST-TENSION DETAILS NO. 7

R. Valtzadeh/V. Tsan/Y.L./N.L./F.C.
DESIGN OVERSIGHT
Roger Nelly Rolf / Yong D. Lu
SIGN OFF DATE 02/15/07
Rev. Date: 3-12-99

DESIGN	BY J. Sun	CHECKED M. Chen	
DETAILS	BY J. Duxbury	CHECKED M. Chen	
QUANTITIES	BY S. Shi	CHECKED D. Harrison	

ORIGINAL SCALE IN MILLIMETERS FOR REDUCED PLANS 0 1L

PREPARED FOR THE STATE OF CALIFORNIA DEPARTMENT OF TRANSPORTATION

R. Manzanarez
PROJECT ENGINEER

BRIDGE NO. 34-0006L/R
KILOMETER POST 13.2/13.9
CU 04
EA 0120F1

DISREGARD PRINTS BEARING EARLIER REVISION DATES

REVISION DATES (PRELIMINARY STAGE I) 02/07/07 01/31/07 01/21/06 12/21/05 12/15/05

SHEET 051R3 OF

FILE => I:\00\04-0120F1\sas\contract plans and cco\cco\in progress\cco+27\cocpt07.dgn

USERNAME => VISITOR DATE PLOTTED => 15 MAR 2007 TIME PLOTTED => 16:04:55

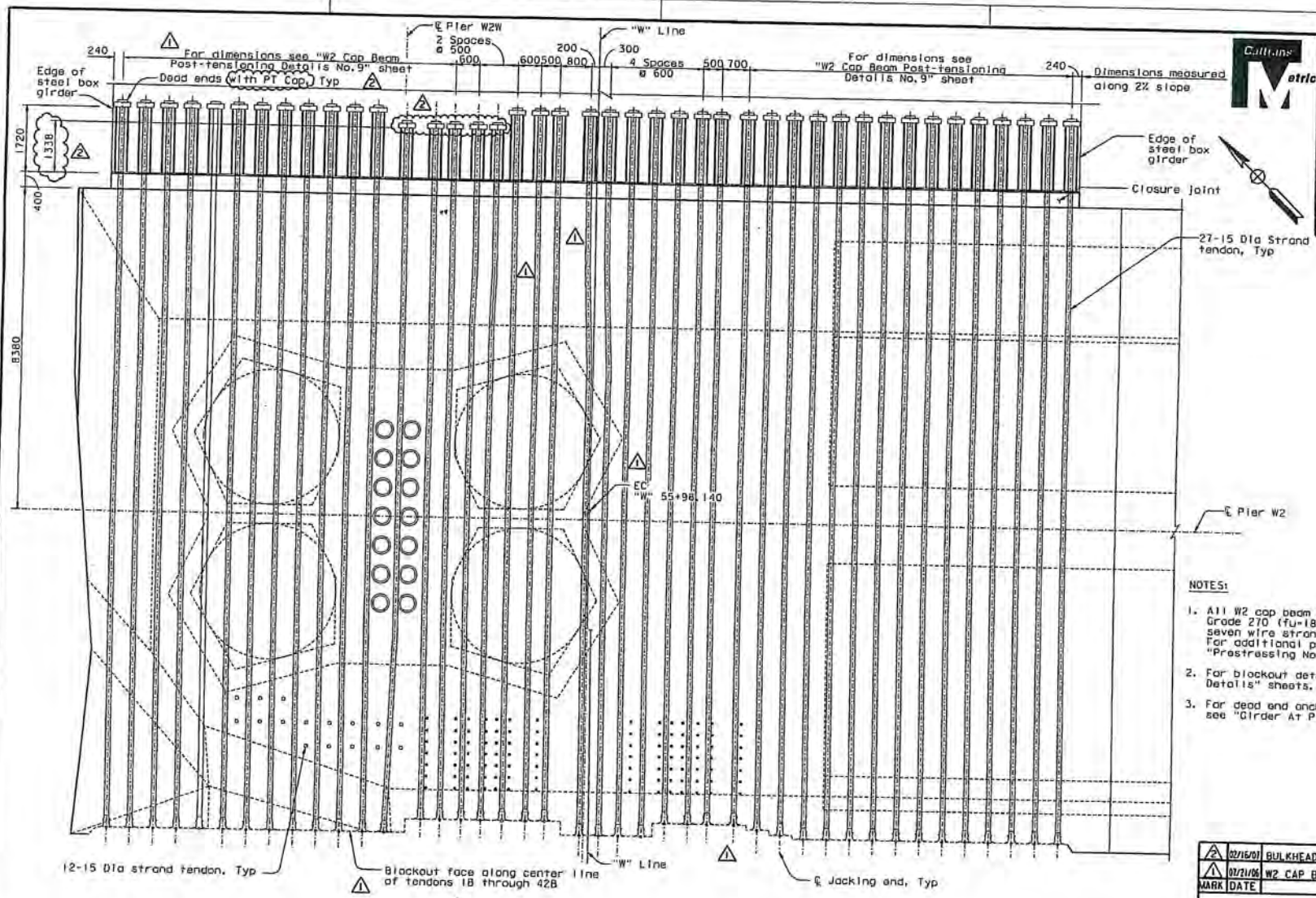

BOTTOM TENDON LAYOUT PLAN ("W" Line)

1:50

DIST.	COUNTY	ROUTE	KILOMETER POST TOTAL PROJECT	SHEET NO.	TOTAL SHEETS
04	SF	80	13.2/13.9	469R2	1204

REGISTERED ENGINEER - CIVIL

12-6-04

PLANS APPROVAL DATE

The State of California or its officers or agents shall not be responsible for the accuracy or completeness of electronic copies of this plan sheet.

REGISTERED PROFESSIONAL ENGINEER John Sun No. C 54648 Exp. 12/31/05 CIVIL STATE OF CALIFORNIA

T.Y. LIN / MOFFATT & NICHOL
825 BATTERY STREET
SAN FRANCISCO, CA 94111

Caltrans now has a web site! To get to the web site, go to: http://www.dot.ca.gov

NOTES:

1. All W2 cap beam continuity tendons are ASTM A416 Grade 270 (fu=1860 MPa), low relaxation, 27-15 Dia seven wire strand PT, unless specified otherwise. For additional prestressing details, see "Prestressing Notes" sheet.
2. For blockout details, see "W2 Cap Beam Blockout Details" sheets.
3. For dead end anchor bearing steel grillage, see "Girder At Pier W2 No.4" sheet.

REGISTERED PROFESSIONAL ENGINEER Dolores P. Duxbury No. C 64677 Exp. 06/30/07 CIVIL STATE OF CALIFORNIA

FOR REVISIONS ONLY

MARK	DATE	DESCRIPTIONS	BY	CH'D	CCO#
2	02/16/07	BULKHEAD AT GIRDER PIER W2	JD	AS	27
1	07/21/06	W2 CAP BEAM ISD	JD	NV	23

REVISIONS

CONTRACT CHANGE ORDER NO. 27
SHEET 6 OF 18

100 % PS&E

ALL DIMENSIONS ARE IN MILLIMETERS UNLESS OTHERWISE SHOWN

R. Vallzadeh/V. Toan/Y.L./W.L./F.C.
DESIGN OVERSIGHT
Y. Lin
SIGN OFF DATE 02/18/07
Rev. Date: 5-18-98

DESIGN	BY J. Sun	CHECKED	M. Chen
DETAILS	BY J. Duxbury	CHECKED	M. Chen
QUANTITIES	BY S. Shi	CHECKED	D. Harrison

ORIGINAL SCALE IN MILLIMETERS FOR REDUCED PLANS

PREPARED FOR THE STATE OF CALIFORNIA DEPARTMENT OF TRANSPORTATION

R. Manzanarez
PROJECT ENGINEER

BRIDGE NO. 34-0006L/R
KILOMETER POST 13.2/13.9

CU 04
EA 0120F1

SAN FRANCISCO OAKLAND BAY BRIDGE
EAST SPAN SEISMIC SAFETY PROJECT
SELF-ANCHORED SUSPENSION BRIDGE
(SUPERSTRUCTURE & TOWER)

W2 CAP BEAM POST-TENSION' DETAILS NO.8

DISREGARD PRINTS BEARING EARLIER REVISION DATES

REVISION DATES (PRELIMINARY STAGE)

SHEET 052R2 OF

FILE => I:\bb\04-0120F1\sps\contract plans and cco\cco\in progress\cco#27\aacpt08.dgn

USERNAME => visitor DATE PLOTTED => 15 MAR 2007 TIME PLOTTED => 16:07:35

DIST.	COUNTY	ROUTE	KILOMETER POST TOTAL PROJECT	SHEET NO.	TOTAL SHEETS
04	SF	80	13.2/13.9	472R2	1204

REGISTERED ENGINEER - CIVIL

12-6-04
PLANS APPROVAL DATE

The State of California or its officers or agents shall not be responsible for the accuracy or completeness of electronic copies of this plan sheet.

T.Y. LIN / MOFFATT & NICHOL
825 BATTERY STREET
SAN FRANCISCO, CA 94111

To get to the web site, go to: http://www.dot.ca.gov

REGISTERED PROFESSIONAL ENGINEER John Sun No. C 54648 Exp. 12/31/05 CIVIL STATE OF CALIFORNIA

REGISTERED PROFESSIONAL ENGINEER Jim Duxbury No. C 64677 Exp. 03/30/07 CIVIL STATE OF CALIFORNIA

FOR REVISIONS ONLY

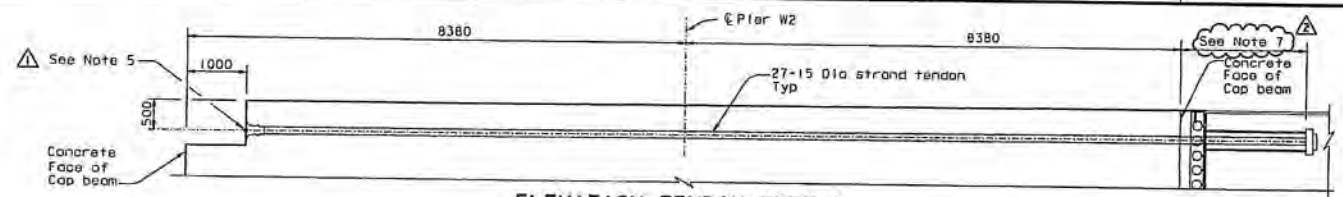

ELEVATION-TENDON TYPE 1

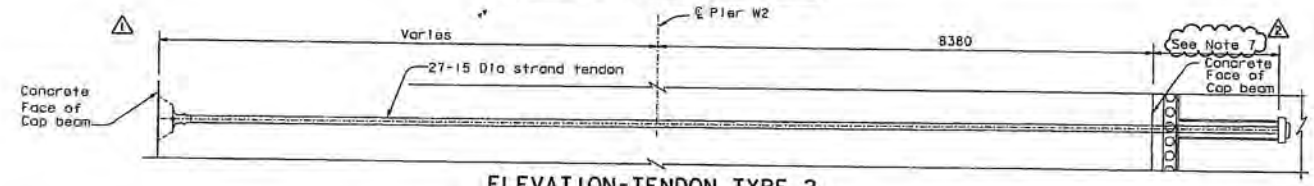

ELEVATION-TENDON TYPE 2

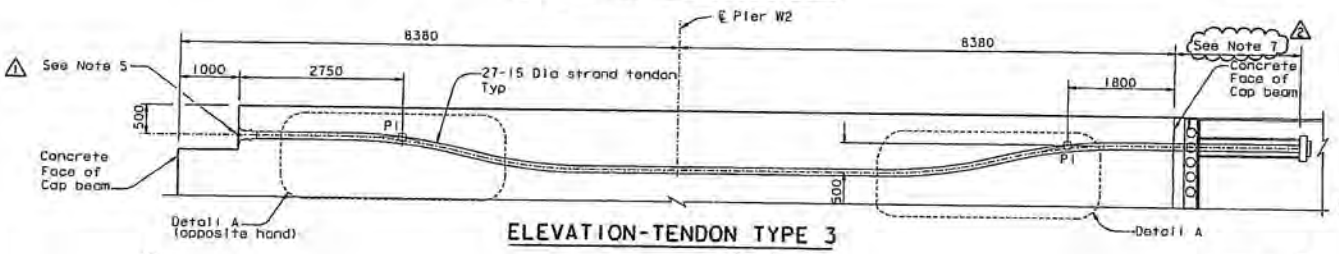

ELEVATION-TENDON TYPE 3

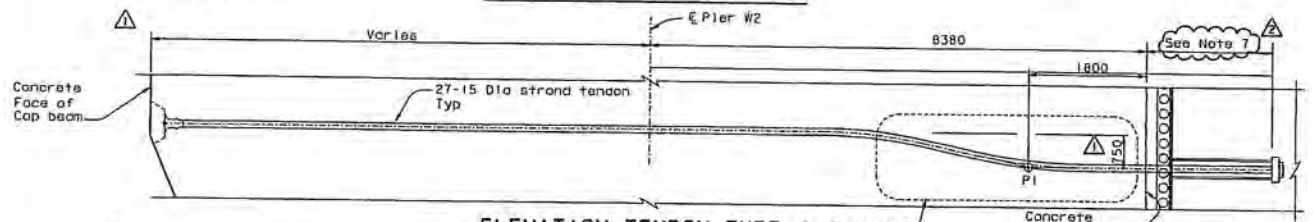

ELEVATION-TENDON TYPE 4

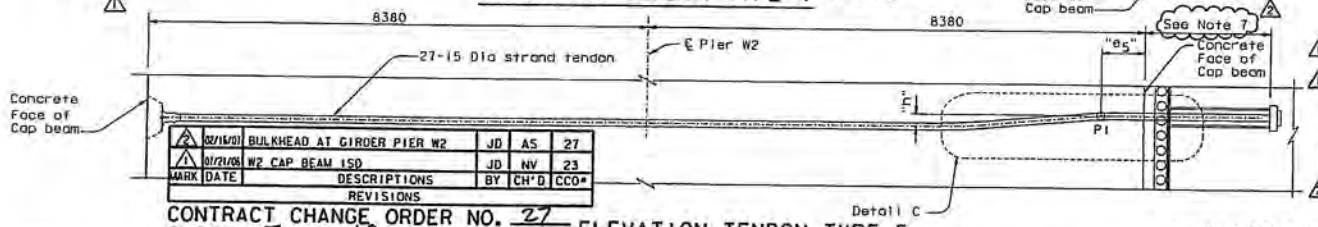

ELEVATION-TENDON TYPE 5

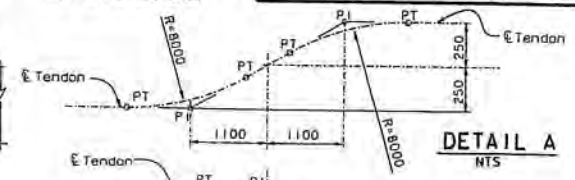

DETAIL A
NTS

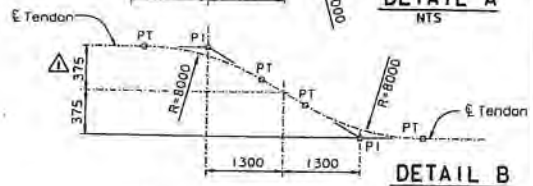

DETAIL B
NTS

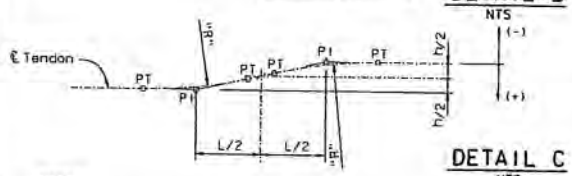

DETAIL C
NTS

NOTES:

1. For additional details, see "W2 Cap Beam Post-Tensioning Details No.5" through "W2 Cap Beam Post-Tensioning Details No.10" sheets.
2. For tendon type designation, see "W2 Cap Beam Post-Tensioning Details No.12" sheet.
3. For PT blockout dimensions, see "W2 Cap Beam Blockout Details" sheets.
4. For dimension "h","L","e5" and "R", see "W2 Cap Beam Post-Tensioning Details No.12" sheet.
5. Adjust vertical face to be normal to the axis of the tendon.
6. Jacking of continuity tendons shall not crush the ducts of the CBT transverse tendons. Where necessary, extra strong steel pipes (ASTM A53 Type S, Grade B, f_y=240 MPa) shall be provided together with necessary hardware connecting the steel pipes to galvanized corrugated steel duct.
7. For extents of post-tensioning into the Girder at Pier W2, see Top and Bottom tendon layout plans on "W2 Cap Beam Post-Tensioning Details No.5 thru No.8" sheets.

MARK	DATE	DESCRIPTIONS	BY	CH'D	CCO#
2	02/16/01	BULKHEAD AT GIRDER PIER W2	JD	AS	27
1	01/21/06	W2 CAP BEAM ISD	JD	NV	23

REVISIONS

CONTRACT CHANGE ORDER NO. 27
SHEET 7 OF 18

ALL DIMENSIONS ARE IN MILLIMETERS UNLESS OTHERWISE SHOWN

R. Valizadeh/V. Toon/Y. L./N. L./F. C.
DESIGN OVERSIGHT
SIGN OFF DATE 02/16/07
Rev. Date: 3-19-98

	BY	CHECKED
DESIGN	J. Sun	M. Chen
DETAILS	J. Duxbury	M. Chen
QUANTITIES	S. Shi	D. Harrison

ORIGINAL SCALE IN MILLIMETERS FOR REDUCED PLANS

PREPARED FOR THE STATE OF CALIFORNIA DEPARTMENT OF TRANSPORTATION

CHECKED R. Manzanarez
PROJECT ENGINEER

BRIDGE NO. 34-0006L/R
KILOMETER POST 13.2/13.9

CU 04
EA 0120F1

DISREGARD PRINTS BEARING EARLIER REVISION DATES

REVISION DATES (PRELIMINARY STAGE)

FILE => I:\bb\04-012001\ppts\contract plans and ccs\ccs\in progress\ccs#2\bsccp11.dgn

SAN FRANCISCO OAKLAND BAY BRIDGE
EAST SPAN SEISMIC SAFETY PROJECT
SELF-ANCHORED SUSPENSION BRIDGE
(SUPERSTRUCTURE & TOWER)

W2 CAP BEAM POST-TENSIONING DETAILS NO. 11

SHEET 055R2 OF

100 % PSAE

USERNAME => visitor DATE PLOTTED => 15 MAR 2007 TIME PLOTTED => 16:08:42

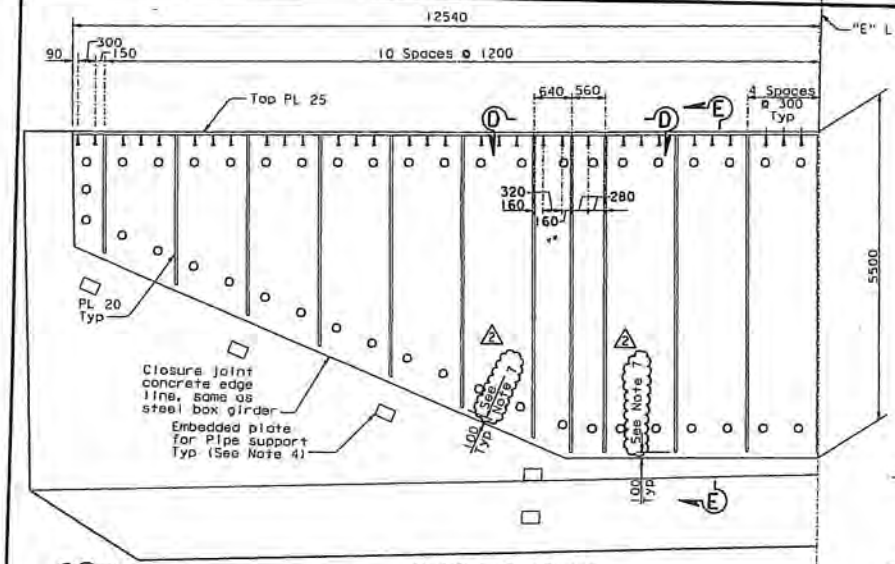

CLOSURE JOINT

(Closure joint reinforcement not shown for clarity)

1:40

NOTES:

6. For extents of post-tensioning into the Girder at Pier W2, see Top and Bottom Tendon layout on "W2 Cap Beam Post-tensioning Details No.5 thru No.8" sheets.
7. For Westbound continuity tendons 28B, 29A and 29B and for Eastbound continuity tendons 29A and 29B, the Contractor may terminate the PL20 vertical stiffener 125 mm above the bottom tendons and below the top tendons.
8. At the Contractor's option, hairpin dimension may be reduced to 1200 min.
9. At the Contractor's option, ultimate splice couplers may be used on #19 hairpins.
10. Bundled hairpins shall be placed along the entire box girder interface perimeter.

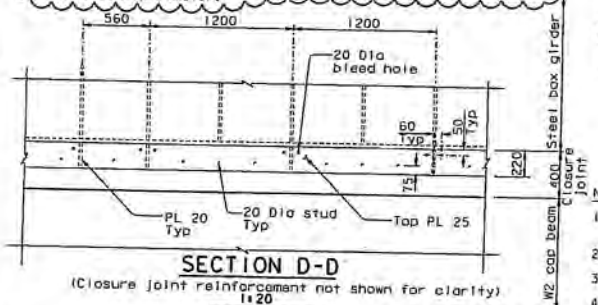

SECTION D-D

(Closure joint reinforcement not shown for clarity)

1:20

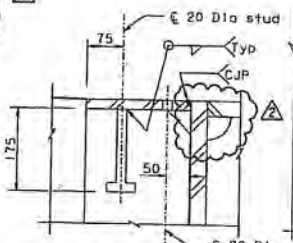

DETAIL A

1:5

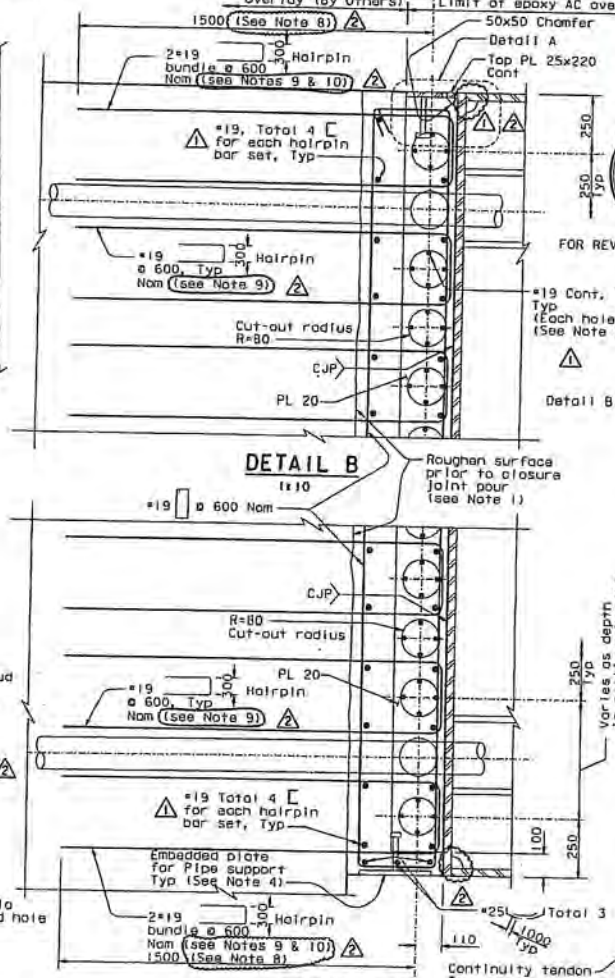

DETAIL B

1:10

DETAIL C

1:10

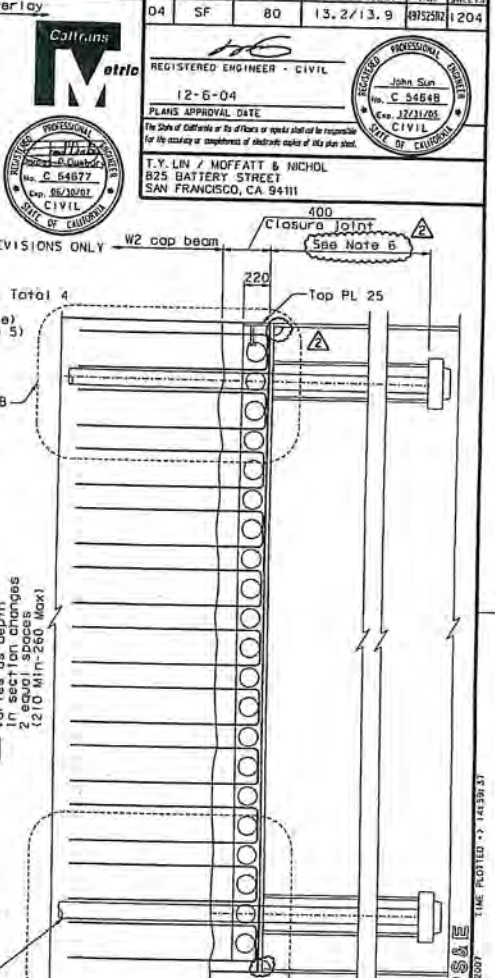

SECTION E-E

1:20

NOTES:

1. Roughen the existing W2 Cap Beam concrete surface to a minimum of 5 mm amplitude prior to pouring the closure joint.
2. Reinforcement spacing shall be adjusted to avoid PT ducts if required.
3. All plate shall be ASTM A709M HPS 485W, unless specified otherwise.
4. For pipe support locations and details, see "Road Plans".
5. At the Contractor's option, 2-#29 bundled bars may be used. △1

ALL DIMENSIONS ARE IN MILLIMETERS UNLESS OTHERWISE SHOWN

MARK	DATE	DESCRIPTIONS	BY	CH'D	CCO#
△2	02/16/01	BULKHEAD AT GIRDER PIER W2	JD	AS	27
△1	01/31/01	WEST DEVIATION SADDLE GEOMETRY	JD	AS	15
△0	07/21/06	GENERAL REVISIONS	JD	AS	23

REVISIONS

CONTRACT CHANGE ORDER NO. 27
SHEET 8 OF 18

R. Vallizadeh/V. Tuan/Y.L./W.L./F.C.
DESIGN OVERSIGHT
Ryan Vallizadeh / Vanya Z. / Y. Liu
SIGN OFF DATE 07/16/07
Rev. Date: 3-16-05

	BY	CHECKED
DESIGN	J. Sun	M. Chen
DETAILS	J. Duxbury	M. Chen
QUANTITIES	S. Shi	D. Harrison

PREPARED FOR THE STATE OF CALIFORNIA DEPARTMENT OF TRANSPORTATION

R. Manzanarez
PROJECT ENGINEER

ORIGINAL SCALE IN MILLIMETERS FOR REDUCED PLANS 0 1 2

CU 04
EA 0120F1

FILE => I:\bay04-012001\sas\contract plans and ccs\cco\in progress\cco*27\sup cco*27\bscap48r-s.dgn

Caltrans now has a web site! To get to the web site, go to: http://www.dot.ca.gov

DIST.	COUNTY	ROUTE	KILOMETER POST TOTAL PROJECT	SHEET No.	TOTAL SHEETS
04	SF	80	13.2/13.9	49152512	1204

REGISTERED ENGINEER - CIVIL
12-6-04
PLANS APPROVAL DATE
The State of California or its officers or agents shall not be responsible for the accuracy or completeness of electronic copies of this plan sheet.
REGISTERED PROFESSIONAL ENGINEER John Sun No. C 54648 Exp. 12/31/05 CIVIL STATE OF CALIFORNIA

T.Y. LIN / MOFFATT & NICHOL
825 BATTERY STREET
SAN FRANCISCO, CA 94111

REGISTERED PROFESSIONAL ENGINEER No. C 54677 Exp. 06/30/07 CIVIL STATE OF CALIFORNIA

FOR REVISIONS ONLY

SAN FRANCISCO OAKLAND BAY BRIDGE
EAST SPAN SEISMIC SAFETY PROJECT
SELF-ANCHORED SUSPENSION BRIDGE
(SUPERSTRUCTURE & TOWER)

BRIDGE NO. 34-0006L/R
KILOMETER POST 13.2/13.9

W2 CAP BEAM REINFORCEMENT DETAILS NO. 49

DISREGARD PRINTS BEARING EARLIER REVISION DATES

REVISION DATES (PRELIMINARY STAGE)

STATUS | SHEET | OF

100 % PS&E

USERNAME => DTCHI
DATE PLOTTED => 10 MAY 2007
TIME PLOTTED => 14:39:31

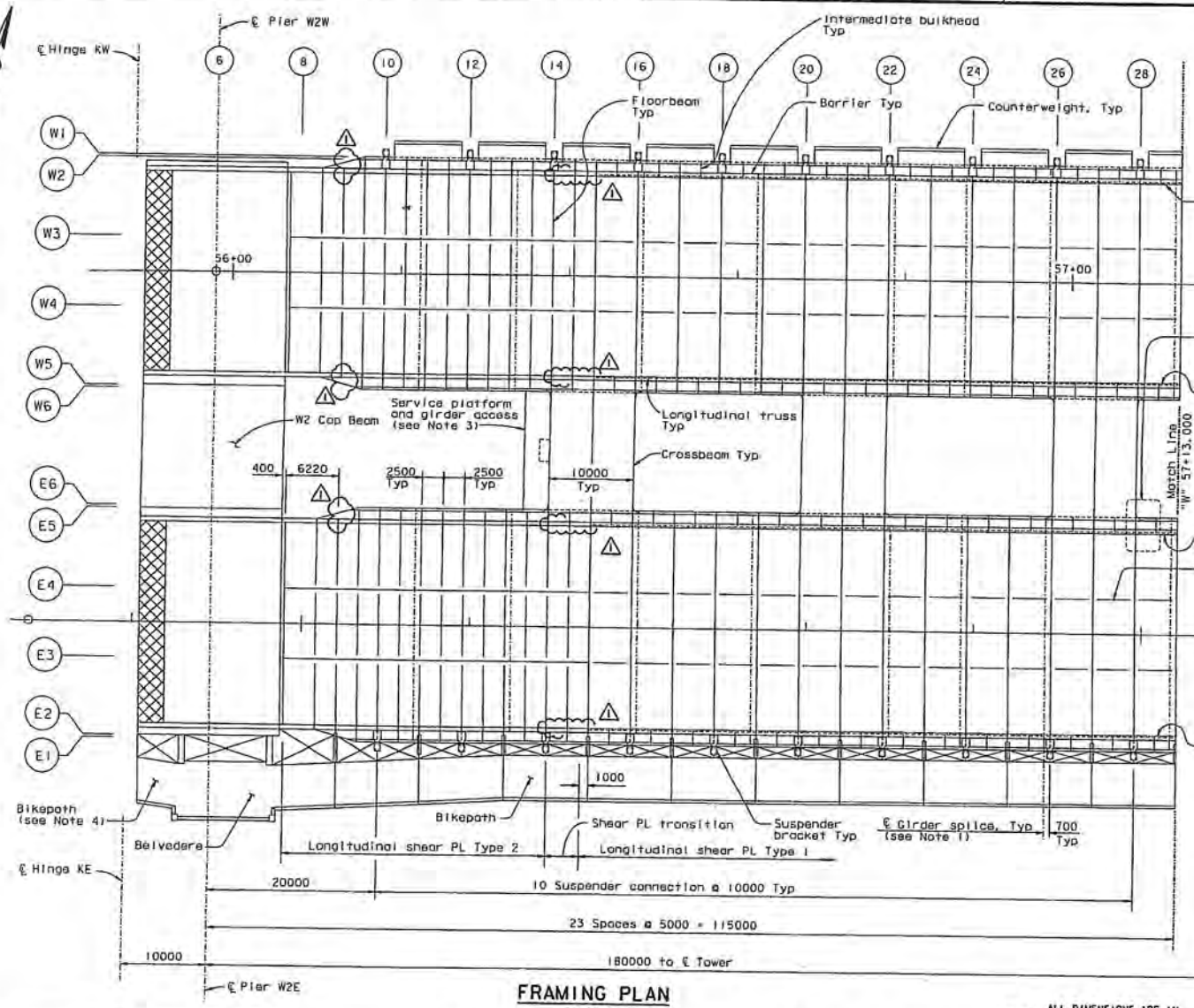

FRAMING PLAN

1:250

BIST.	COUNTY	ROUTE	KILOMETER POST TOTAL PROJECT	SHEET NO.	TOTAL SHEETS
04	SF	80	13.2/13.9	619R1	1204

REGISTERED ENGINEER - CIVIL

12-6-04

PLANS APPROVAL DATE

The State of California or its officers or agents shall not be responsible for the accuracy or completeness of electronic copies of this plan sheet.

PROFESSIONAL ENGINEER Marwan N. Nader No. C 054426 Exp. 12/31/07 CIVIL STATE OF CALIFORNIA

T.Y. LIN / MOFFATT & NICHOL
825 BATTERY STREET
SAN FRANCISCO, CA 94111

Caltrans now has a web site! To get to the web site, go to: http://www.dot.ca.gov

MARK	DATE	DESCRIPTIONS	BY	CH'D	CCO#
1	02/16/07	BULKHEAD AT GIRDER PIER W2	MN	AS	27

REVISIONS

CONTRACT CHANGE ORDER NO. 27
SHEET 9 OF 18

LEGEND:

Blockout for modular joint

NOTES:

1. For girder splice details, see "Typical Girder Details" sheets.
2. For modular joint details, see "Hinge K Expansion Joint Details" sheet.
3. For service platform details, see "Road Plans". For girder access details, see "Girder Access Details" sheets.
4. Indicated area of bikepath to be installed by Others after demolition of existing structure. For details, see "Bikepath Layout" sheets.

ALL DIMENSIONS ARE IN MILLIMETERS UNLESS OTHERWISE SHOWN

R. Vaziadeh/V. Tuan/Y.L./R.L./F.C.
DESIGN OVERSIGHT
Y. Liu
STOP OFF DATE 02/16/07
Rev. Date 3-15-06

DESIGN	BY M. Nader	CHECKED T. McMeans	
DETAILS	BY G. Baker	CHECKED T. McMeans	
QUANTITIES	BY G. Baker	CHECKED M. Roberts	

ORIGINAL SCALE IN MILLIMETERS FOR REDUCED PLANS 0 1.

PREPARED FOR THE STATE OF CALIFORNIA DEPARTMENT OF TRANSPORTATION

R. Manzanarez
PROJECT ENGINEER

BRIDGE NO. 34-0006L/R
KILOMETER POST 13.2/13.9

CU 04
EA 0120F1

DISREGARD PRINTS BEARING EARLIER REVISION DATES

REVISION DATES (PRELIMINARY STAGE)

SAN FRANCISCO OAKLAND BAY BRIDGE
EAST SPAN SEISMIC SAFETY PROJECT
SELF-ANCHORED SUSPENSION BRIDGE
(SUPERSTRUCTURE & TOWER)

GIRDER FRAMING PLAN NO. 1

SHEET 202R1 OF

FILE => J:\bb\04-0120f1\sas\contract plans and cco\cco\in progress\cco#27\ogg1r01.dgn

USERNAME => aliahsanshy DATE PLOTTED => 16 MAR 2007 TIME PLOTTED => 01:41:45

100 % PS&E

DIST.	COUNTY	ROUTE	KILOMETER POST TOTAL PROJECT	SHEET NO.	TOTAL SHEETS
04	SF	80	13.2/13.9	646R1	1204

George Baker
REGISTERED ENGINEER - CIVIL
12-6-04
PLANS APPROVAL DATE

The State of California or its officers or agents shall not be responsible for the accuracy or completeness of electronic copies of this plan sheet.

T.Y. LIN / MOFFATT & NICHOL
825 BATTERY STREET
SAN FRANCISCO, CA 94111

Caltrans now has a web site! To go to the web site, go to: http://www.dot.ca.gov

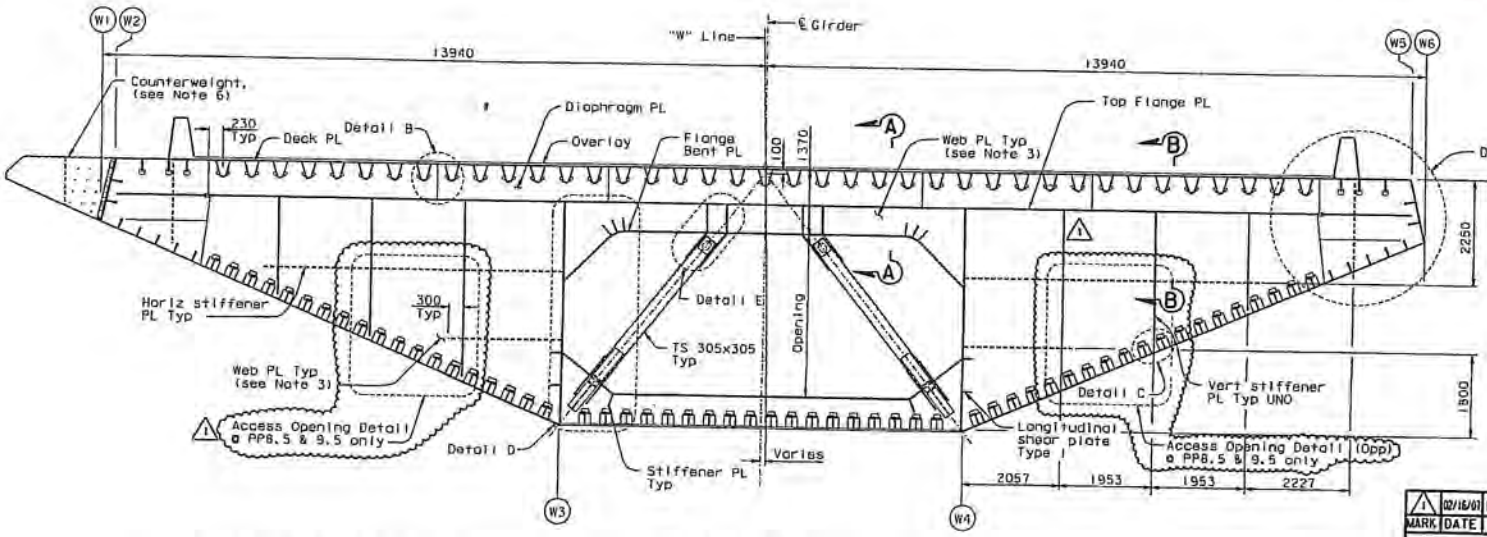

"W" LINE

TYPICAL FLOORBEAM SECTION (See Note 1)

1:50

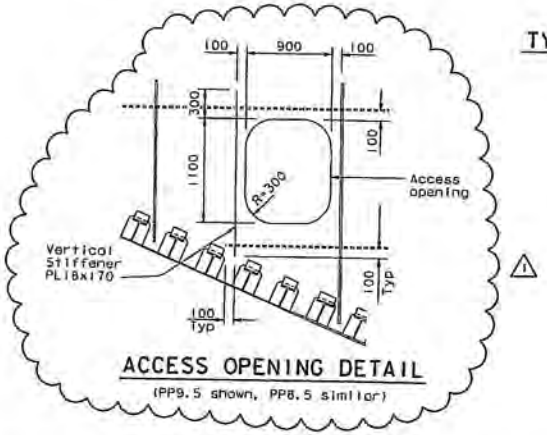

ACCESS OPENING DETAIL

(PP9.5 shown, PP8.5 similar)

NOTES:

1. Typical floorbeam is located at Panel Points 9 through 115 and intermediate Panel Points 8.5 to 9.5.
2. For floorbeam at intermediate Panel Points 10.5, 11.5, 12.5, 13.5, 111.5, 112.5, 113.5, 114.5, 115.2 and 115.5, see "Typical Floorbeam Details No.8" sheet.
3. For extents and thickness of floorbeam web, see "Typical Floorbeam Details No.2" sheet.
4. All dimensions are taken with respect to a reference line tangent to top deck plate.
5. For Sections A-A and B-B and Details B and C, see "Typical Floorbeam Details No.4" sheet.
6. For counterweight details, see "Typical Girder Details No.17" sheet.
7. For "Typical Floorbeam Details" sheets all bolts shall be detailed according to the bolt dimension table. See "Typical Girder Details No.1" sheet. All bolts are HS, unless noted otherwise.
8. For "Typical Floorbeam Details" sheets unless noted otherwise all fillet welds shall be 6 mm for plate sizes not greater than 20 mm. For plates greater than 20 mm fillet welds shall be 8 mm unless noted otherwise.
9. For Detail A, see "Typical Floorbeam Details No.3" sheet.
10. For Details D and E, see "Typical Floorbeam Details No.5" sheet.

FOR REVISIONS ONLY

MARK	DATE	DESCRIPTIONS	BY	CH'D	CCO#
1	02/16/01	BULKHEAD AT GIRDER PIER W2	AS	DT	27
		REVISIONS			

CONTRACT CHANGE ORDER NO. 27
SHEET 10 OF 18

ALL DIMENSIONS ARE IN MILLIMETERS UNLESS OTHERWISE SHOWN

R. Valizadeh/V. Toan/Y.L./N.L./F.C.
DESIGN OVERSIGHT
Y. Liu
SIGN OFF DATE 02/16/0
Rev. Date 3-15-88

DESIGN	BY G. Baker	CHECKED P. Ritchie	
DETAILS	BY S. Cano	CHECKED T. McKeons	
QUANTITIES	BY C. Mauch	CHECKED M. Roberts	

ORIGINAL SCALE IN MILLIMETERS FOR REDUCED PLANS

PREPARED FOR THE STATE OF CALIFORNIA DEPARTMENT OF TRANSPORTATION

R. Manzanarez
PROJECT ENGINEER

BRIDGE NO. 34-0006L/R
KILOMETER POST 13.2/13.9

CU 04
EA 0120F1

DISREGARD PRINTS BEARING EARLIER REVISION DATES

SAN FRANCISCO OAKLAND BAY BRIDGE
EAST SPAN SEISMIC SAFETY PROJECT
SELF-ANCHORED SUSPENSION BRIDGE
(SUPERSTRUCTURE & TOWER)

TYPICAL FLOORBEAM DETAILS NO. 1

SHEET 229R1 OF

FILE => U:\cdb\04-0120F1\sds\contract plans and aco\cco\in progress\cco*27\ogftb01.dgn

USERNAME => \\ignatevsg\IL PLOTTED => 19 MAR 2007 TIME PLOTTED => 13:49:44

100 % PSAE

Caltrans now has a web site! To get to the web site, go to: http://www.dot.ca.gov

Caltrans Metric

DIST.	COUNTY	ROUTE	KILOMETER POST TOTAL PROJECT	SHEET NO.	TOTAL SHEETS
04	SF	80	13.2/13.9	665R1	1204

George Baker
REGISTERED ENGINEER - CIVIL
12-6-04
PLANS APPROVAL DATE
The State of California or its officers or agents shall not be responsible for the accuracy or completeness of electronic copies of this plan sheet.

REGISTERED PROFESSIONAL ENGINEER George S. Baker No. C57112 Exp. 12/31/05 CIVIL STATE OF CALIFORNIA

T.Y. LIN / MOFFATT & NICHOL
825 BATTERY STREET
SAN FRANCISCO, CA 94111

MARK	DATE	DESCRIPTIONS	BY	CH'D	CCO#
1	02/16/01	BULKHEAD AT GIRDER PIER W2	GB	DT	27

REVISIONS

CONTRACT CHANGE ORDER NO. 27
SHEET 11 OF 18

REGISTERED PROFESSIONAL ENGINEER Donald J. Turner No. C 65033 Exp. 06/30/03 CIVIL STATE OF CALIFORNIA

FOR REVISIONS ONLY

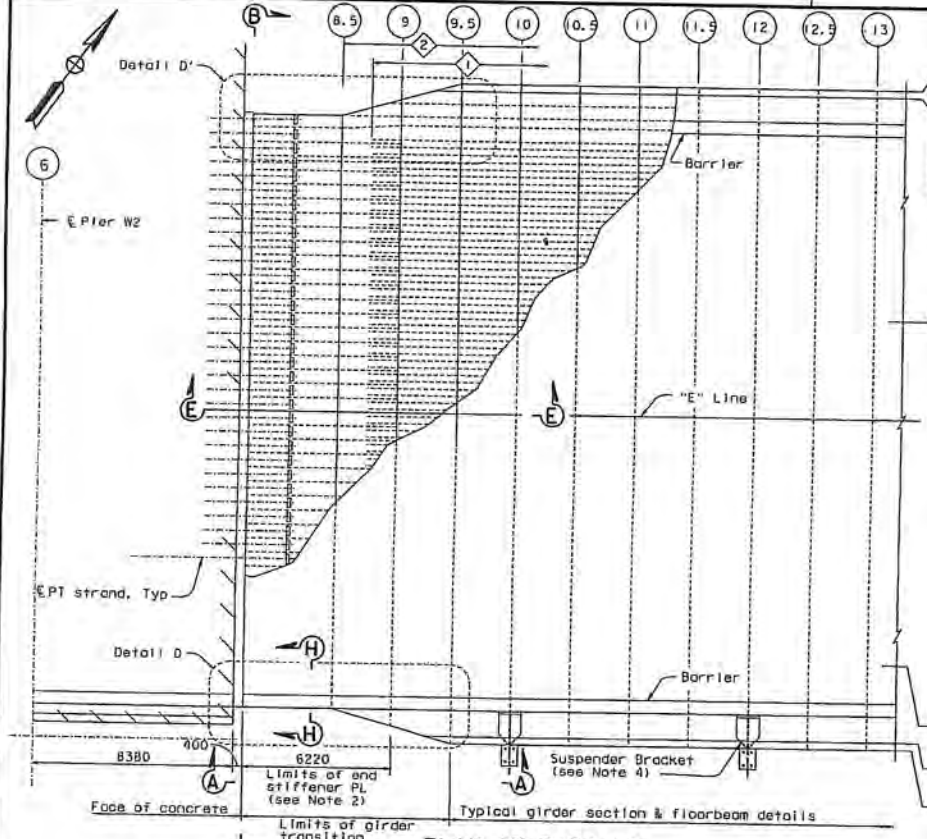

PLAN AT PIER W2
1:100

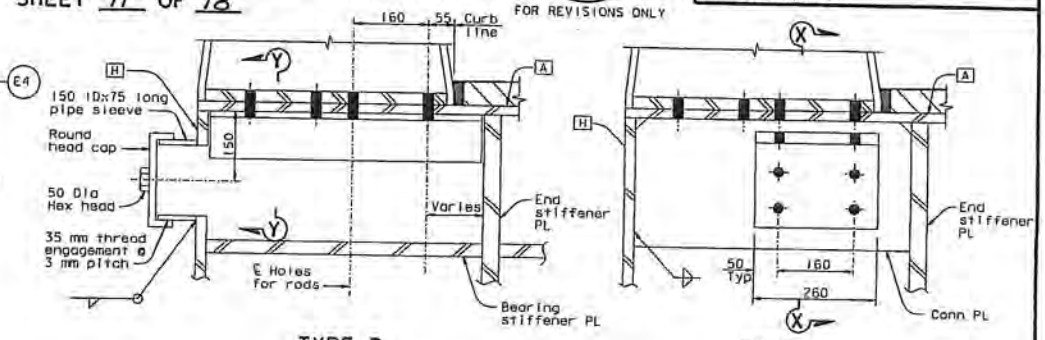

TYPE D

TYPE E

BARRIER CONNECTION DETAILS (See Note 3)
1:5

LEGEND:

- [A] Girder face designation A
- Stiffener Type 2, 3, 9, 10, 11 or other stiffener
- Stiffener Type 1 leg
- Stiffener Type 1 designation

NOTES:

1. For layout of girder transition, see "Girder At Pier W2 No. 5" sheet. For floorbeam at PP6.5 and PP9, see "Girder At Pier W2 No. 6" sheet.
2. For limits of end stiffener plate and layout of transition to typical girder stiffeners, see "Girder At Pier W2 No. 3 and 4" sheets.
3. For location of barrier connection Types D and E, see "Girder At Pier W2 No. 3" sheet. For connection details not shown, see "Typical Girder Details No. 14" sheet.
4. For suspender bracket, see "Suspender Bracket Details No. 1, 2 and 3" sheets.
5. For "Girder At Pier W2" sheets all bolts shall be detailed according to the bolt dimension table, see "Typical Girder Details No. 1" sheet. All bolts are HS unless noted otherwise.
6. For "Girder At Pier W2" sheets unless noted otherwise all fillet welds shall be 6 mm for plate sizes not greater that 20 mm. For plates greater than 20 mm fillet welds shall be 8 mm unless noted otherwise.
7. For end-view Section B-B, see "Girder At Pier W2 No. 2" sheet.
8. For Section H-H and Details D and D', see "Girder At Pier W2 No. 3" sheet.
9. For Section E-E, see "Girder At Pier W2 No. 4" sheet.

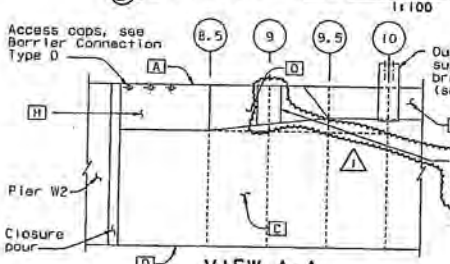

VIEW A-A
1:100

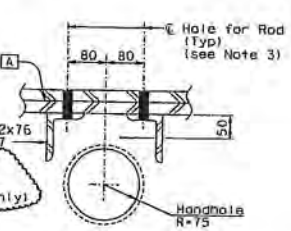

SECTION Y-Y
1:5

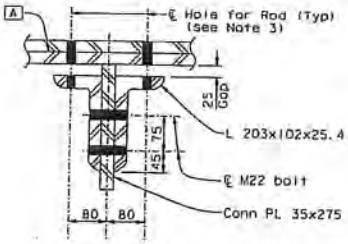

SECTION X-X
1:5

ALL DIMENSIONS ARE IN MILLIMETERS UNLESS OTHERWISE SHOWN

R. Vallzadeh/V. Tao/Y.L./W.L./F.C.
DESIGN OVERSIGHT
Y. Liu
STOP OFF DATE 02/16/01
Rev. Date: 3-13-95

DESIGN	BY G. Baker	CHECKED P. Ritchie	
DETAILS	BY M. Guiyas	CHECKED T. McMeans	
QUANTITIES	BY C. Mauch	CHECKED M. Roberts	

ORIGINAL SCALE IN MILLIMETERS FOR REDUCED PLANS

PREPARED FOR THE STATE OF CALIFORNIA DEPARTMENT OF TRANSPORTATION

R. Manzanarez
PROJECT ENGINEER

CU 04
EA 0120F1

BRIDGE NO. 34-0006L/R
KILOMETER POST 13.2/13.9

SAN FRANCISCO OAKLAND BAY BRIDGE
EAST SPAN SEISMIC SAFETY PROJECT
SELF-ANCHORED SUSPENSION BRIDGE
(SUPERSTRUCTURE & TOWER)

GIRDER AT PIER NO. 1

DISREGARD PRINTS BEARING EARLIER REVISION DATES

REVISION DATES (PRELIMINARY STAGE)

SHEET 248R1 OF

FILE => I:\bb\04-01200\sas\contract plans and ccd\cco\in progress\cco#27\ggdd01.dgn

100 % PSAE

USERNAME => dlipinski DATE PLOTTED => 16 MAR 2001 TIME PLOTTED => 01:31:54

DIST.	COUNTY	ROUTE	KILOMETER POST TOTAL PROJECT	SHEET NO.	TOTAL SHEETS
04	SF	80	13.2/13.9	666R1	1204

George Baker
REGISTERED ENGINEER - CIVIL
12-6-04
PLANS APPROVAL DATE

REGISTERED PROFESSIONAL ENGINEER George S. Baker No. C57112 Exp. 12/31/05 CIVIL STATE OF CALIFORNIA

The State of California or its officers or agents shall not be responsible for the accuracy or completeness of electronic copies of this plan sheet.

T.Y. LIN / MOFFATT & NICHOL
825 BATTERY STREET
SAN FRANCISCO, CA 94111

Caltrans now has a web site! To get to the web site, go to http://www.dot.ca.gov

Caltrans Metric

REGISTERED PROFESSIONAL ENGINEER Donald A. Turner No. C 65033 Exp. 06/30/07 CIVIL STATE OF CALIFORNIA

FOR REVISIONS ONLY

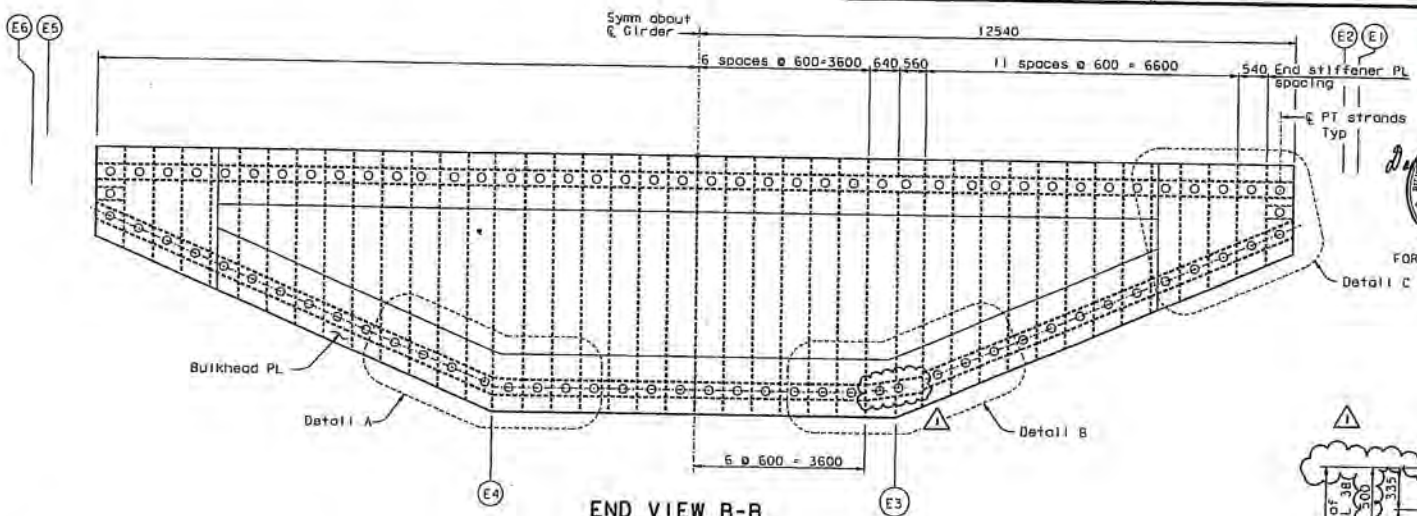

END VIEW B-B
1:50

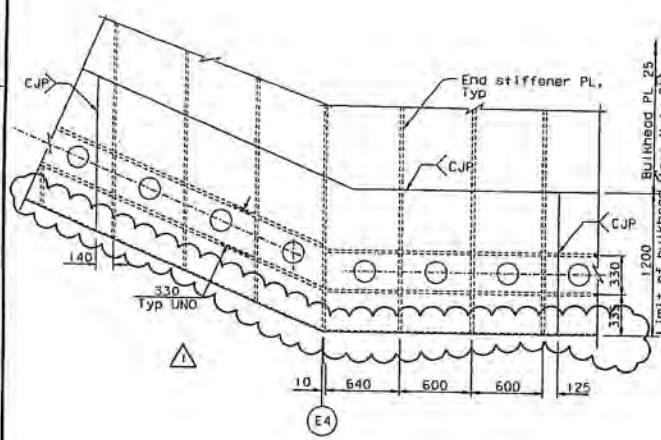

DETAIL A
1:20

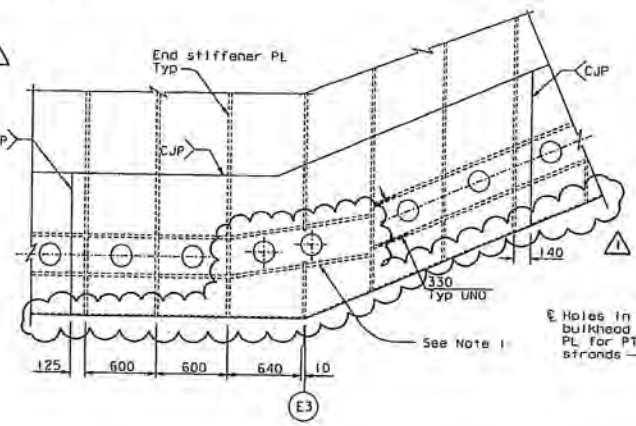

DETAIL B
1:20

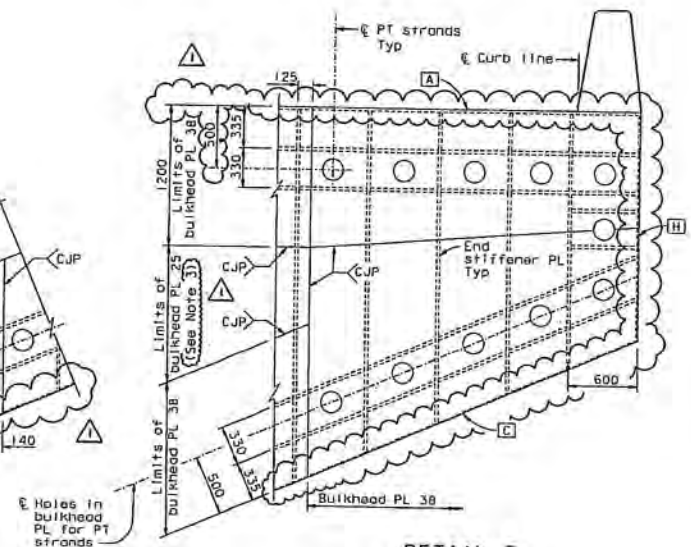

DETAIL C
1:20

NOTES:

1. Top and bottom strands above the E3 and W3 working points shall be placed in openings. For opening details, see Detail E on "Girder At Pier W2 No. 4" sheet.
2. For locations of PT strands, see "W2 Cap Beam Post-Tensioning Details" sheets.
3. At the Contractor's option, PL 38 may be used subject to review and approval of the Engineer.

MARK	DATE	DESCRIPTIONS	BY	CH'D	CCO#
1	02/15/07	BULKHEAD AT GIRDER PIER W2	AS	DT	27

REVISIONS

CONTRACT CHANGE ORDER NO. 27
SHEET 12 OF 18

ALL DIMENSIONS ARE IN MILLIMETERS UNLESS OTHERWISE SHOWN.

R. Valizadeh/V. Tran/Y.L./W.L./F.C.
DESIGN OVERSIGHT
Y. Liu
SIGN OFF DATE 02/15/07

DESIGN	G. Baker	CHECKED	P. Ritchie
DETAILS	S. Cano	CHECKED	T. McMeans
QUANTITIES	S. Mouch	CHECKED	M. Roberts

ORIGINAL SCALE IN MILLIMETERS FOR REDUCED PLANS

PREPARED FOR THE STATE OF CALIFORNIA DEPARTMENT OF TRANSPORTATION

R. Manzanarez
PROJECT ENGINEER

CU 04
EA 0120F1

BRIDGE NO. 34-0006L/R
KILOMETER POST 13.2/13.9

DISREGARD PRINTS BEARING EARLIER REVISION DATES

REVISION DATES (PRELIMINARY STAGE)

SAN FRANCISCO OAKLAND BAY BRIDGE
EAST SPAN SEISMIC SAFETY PROJECT
SELF-ANCHORED SUSPENSION BRIDGE
(SUPERSTRUCTURE & TOWER)
GIRDER AT PIER W2 NO. 2

SHEET 24981 OF

FILE => I:\bb\04-0120f1\sos\contract plans and eco\eco\in progress\co*27\ggad02.dgn

USERNAME => \\ryanoakley DATE PLOTTED => 15 MAR 2007 TIME PLOTTED => 15:21:28

100 % PS&E

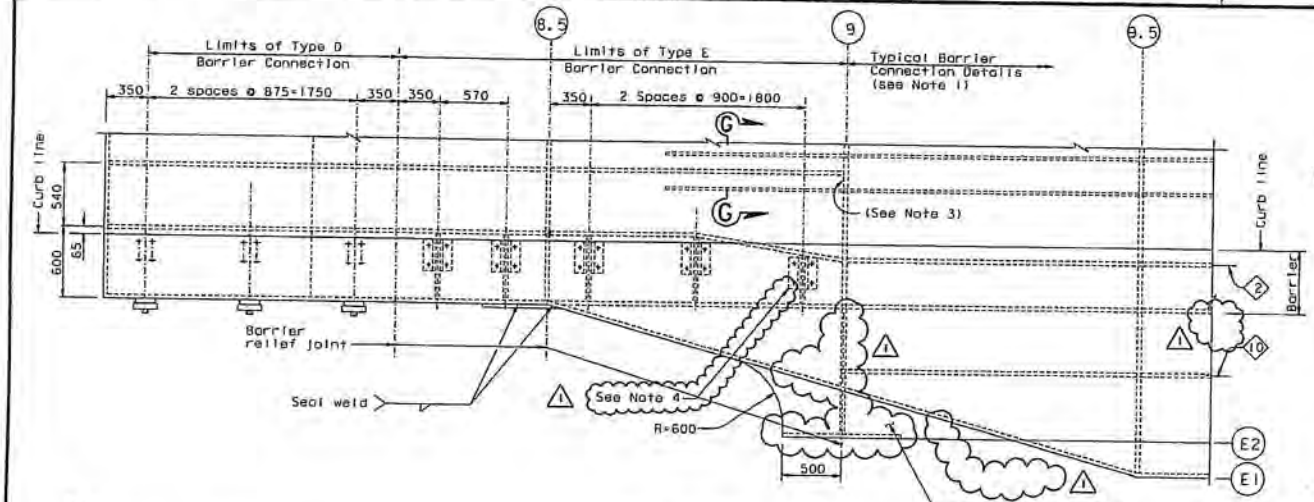

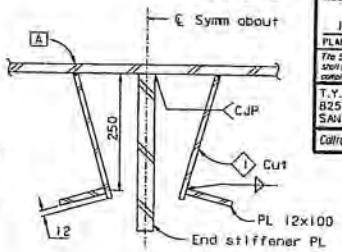

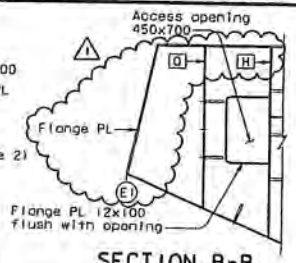

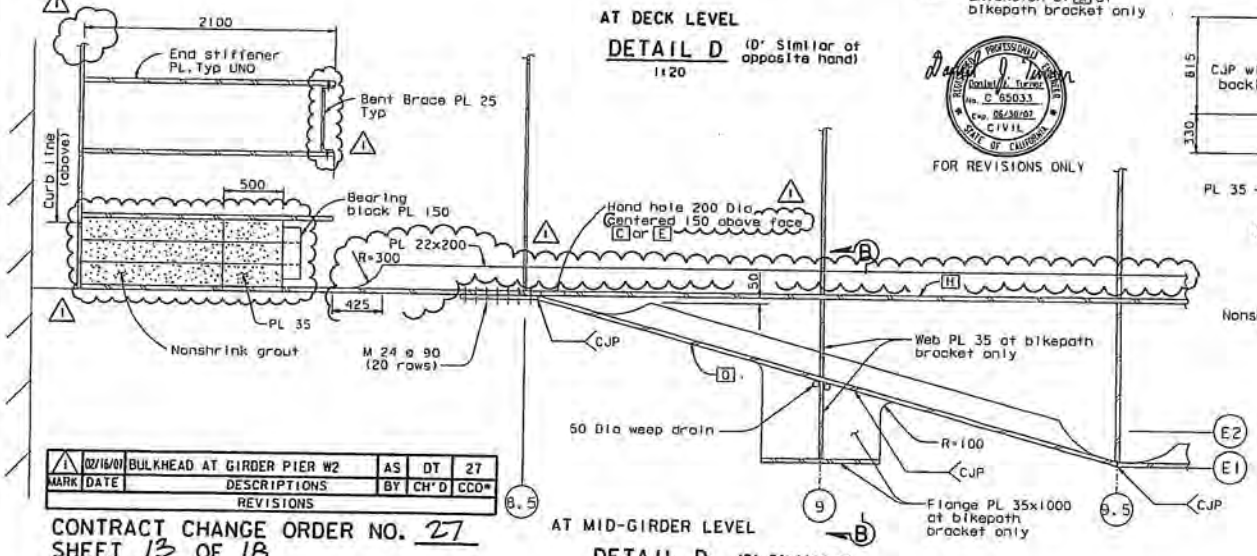

FOR REVISIONS ONLY

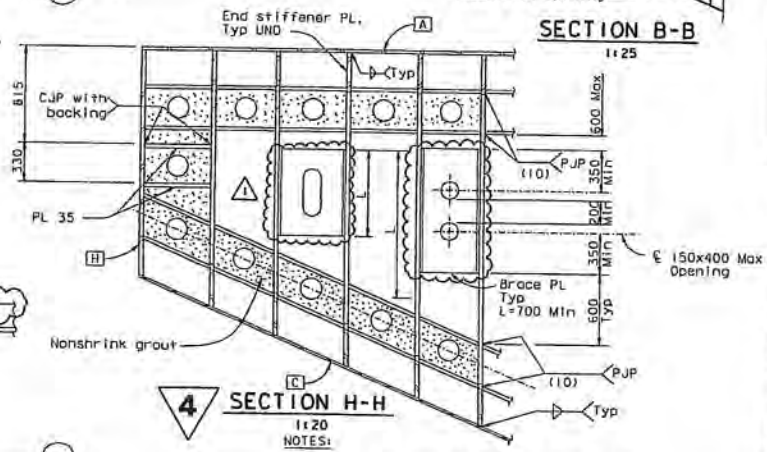

NOTES:

1. For typical barrier connection details, see "Typical Girder Details No. 14" sheet. For barrier connection Type D and E, see "Girder At Pier W2 No. 1" sheet.
2. For girder stiff 1 transition details not shown, see "Girder At Pier W2 No. 4" sheet.
3. For all girder stiffeners 1 (Type 2) the gap in the closure plates shall be caulked at PP9.
4. Base plate connection bolts in the barrier shall be adjusted to fit the anchor bolts in this connection.

MARK	DATE	DESCRIPTIONS	BY	CH'D	CCO#
1	02/16/07	BULKHEAD AT GIRDER PIER W2	AS	DT	27

REVISIONS

CONTRACT CHANGE ORDER NO. 27
SHEET 13 OF 18

4 REVISED PER ADDENDUM NO. 4 DATED DECEMBER 9, 2005

ALL DIMENSIONS ARE IN MILLIMETERS UNLESS OTHERWISE SHOWN

DISTRICT	COUNTY	ROUTE	KILOMETER POST TOTAL PROJECT	SHEET NO.	TOTAL SHEETS
04	SF	80	13.2/13.9	667R1	1204

George Baker
REGISTERED ENGINEER - CIVIL
12-6-04
PLANS APPROVAL DATE

The State of California or its officers or agents shall not be responsible for the accuracy or completeness of electronic copies of this plan sheet.

T.Y. LIN / MOFFATT & NICHOL
825 BATTERY STREET
SAN FRANCISCO, CA 94111

Caltrans now has a web site! To get to the web site, go to http://www.dot.ca.gov

R. Valizadeh/V. Toon/Y.L./N.L./F.C.
DESIGN OVERSIGHT
Y. Lin
STOP OF DATE 02/16/07
Rev. Date 2-16-98

DESIGN	BY G. Baker	CHECKED P. Ritchie	
DETAILS	BY C. Mauch	CHECKED T. McKeons	
QUANTITIES	BY C. Mauch	CHECKED M. Roberts	

PREPARED FOR THE STATE OF CALIFORNIA DEPARTMENT OF TRANSPORTATION

R. Manzanarez
PROJECT ENGINEER

BRIDGE NO. 34-0006L/R
KILOMETER POST 13.2/13.9

CU 04
EA 0120F1

SAN FRANCISCO OAKLAND BAY BRIDGE
EAST SPAN SEISMIC SAFETY PROJECT
SELF-ANCHORED SUSPENSION BRIDGE
(SUPERSTRUCTURE & TOWER)

GIRDER AT PIER W2 NO. 3

SHEET 250R1

FILE => I:\04\04-0120F1\sos\contract plans and ccs\cco\in progress\cco#27\oggd03.dgn

DISREGARD PRINTS BEARING EARLIER REVISION DATES

100 % PS&E

DATE PLOTTED => 16 MAR 2007 TIME PLOTTED => 07:54:39

DIST.	COUNTY	ROUTE	KILOMETER POST TOTAL PROJECT	SHEET NO.	TOTAL SHEETS
04	SF	80	13.2/13.9	668R1	1204

George Baker
REGISTERED ENGINEER - CIVIL
12-6-04
PLANS APPROVAL DATE
The State of California or its officers or agents shall not be responsible for the accuracy or completeness of electronic copies of this plan sheet.

REGISTERED PROFESSIONAL ENGINEER George S. Baker No. C 57112 Exp. 12/31/05 CIVIL STATE OF CALIFORNIA

T.Y. LIN / MOFFATT & NICHOL
825 BATTERY STREET
SAN FRANCISCO, CA 94111

Caltrans now has a web site! To get to the web site, go to: http://www.dot.ca.gov

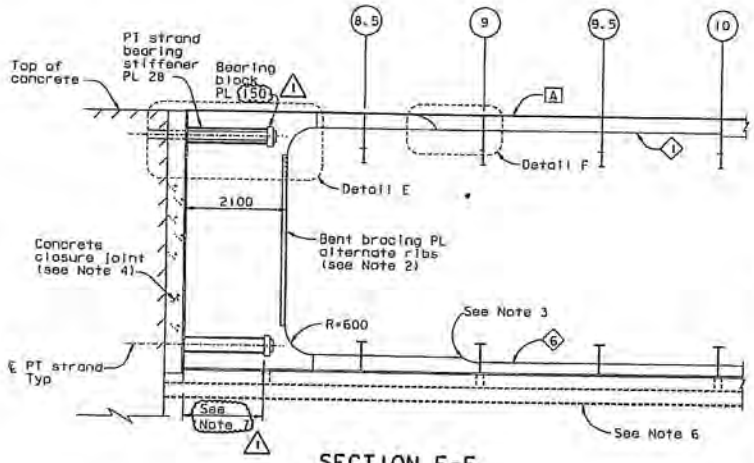

SECTION E-E
1:50

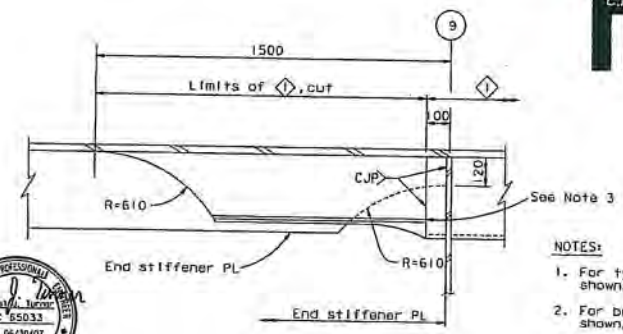

DETAIL F
1:10

FOR REVISIONS ONLY

MARK	DATE	DESCRIPTIONS	BY	CH'D	CCO#
1	02/16/01	BULKHEAD AT GIRDER PIER W2	GB	DT	27

REVISIONS

CONTRACT CHANGE ORDER NO. 27
SHEET 14 OF 18

NOTES:

1. For typical girder stiffener 1 details not shown, see "Typical Girder Details No. 4" sheet.
2. For bracing details of end stiffener plate not shown, see "Girder At Pier W2 No. 3" sheet.
3. For termination of end stiff plate and stiffeners, see typical details on "Typical Girder Details No. 16" sheet.
4. For concrete closure joint details, see "W2 Cap Beam Reinforcement Details No. 49" sheet.
5. For longitudinal shear PL details not shown, see "Typical Girder Details No. 7" sheet.
6. For location and details of traveler rail, see "Traveler Rail Details" sheets.
7. For Cutout End Stiffener Plate detail, PT standard bearing stiffener PL dimensions and bearing block types, see "Girder At Pier W2 No. 4A" and "Girder At Pier W2 No. 4B" sheets.
8. The Contractor may substitute the PT duct with a 200 Max diameter standard PT pipe, subject to review and approval of the Engineer. The Contractor may also shop drill a 225 Max diameter hole in the Bulkhead PL to extend the PT pipe into the closure pour side of the Bulkhead PL. The interface between the PT pipe and the Bulkhead PL shall be seal welded all around.
9. At the Contractor's option silicone caulking may be used in lieu of seal weld.
10. At the Contractor's option the 10 mm PJP weld may be replaced with a 14 mm fillet weld at locations where there are openings in the End Stiffener PL or Long Shear PL only.

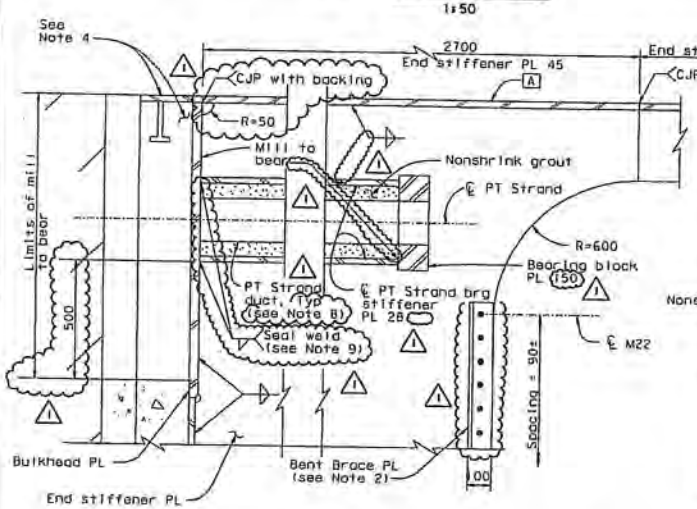

TYPICAL DETAIL AT END STIFFENER PLATE

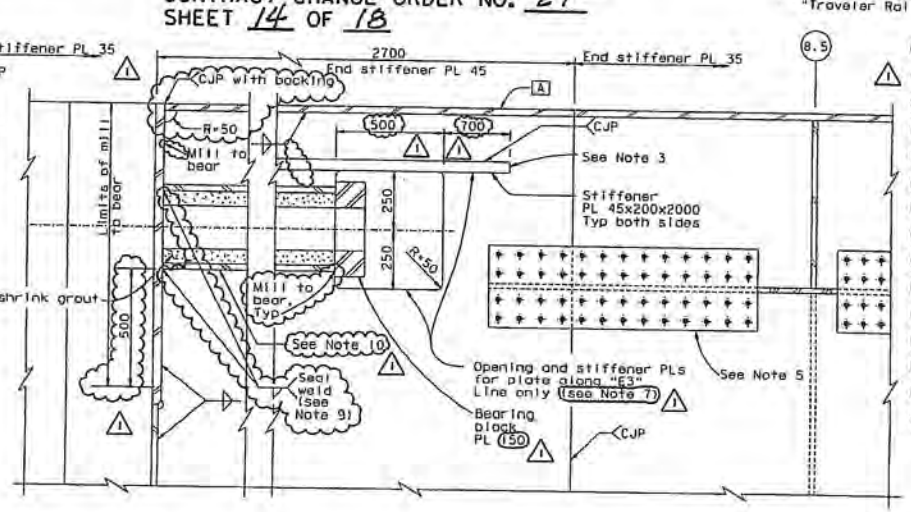

AT LONG SHEAR PLATE ALONG E3 WORKING LINE
(Long shear plate along E4 Working Line similar except as shown)

DETAIL E (see Note 7)
1:10

ALL DIMENSIONS ARE IN MILLIMETERS UNLESS OTHERWISE SHOWN

R. Valizadeh/V. Toan/T.L./W.L./F.C.
DESIGN OVERSIGHT
Y. Liu
SIGN OFF DATE 02/18/00
Rev. Date: 3-15-00

	BY	CHECKED
DESIGN	G. Baker	P. Ritchie
DETAILS	S. Cano	T. McMeans
QUANTITIES	C. Mouch	M. Roberts

PREPARED FOR THE STATE OF CALIFORNIA DEPARTMENT OF TRANSPORTATION

R. Manzanarez
PROJECT ENGINEER

BRIDGE NO. 34-0006L/R
KILOMETER POST 13.2/13.9
CU 04
EA 0120F1

SAN FRANCISCO OAKLAND BAY BRIDGE
EAST SPAN SEISMIC SAFETY PROJECT
SELF-ANCHORED SUSPENSION BRIDGE
(SUPERSTRUCTURE & TOWER)

GIRDER AT PIER NO. 4

SHEET 251R1 OF

ORIGINAL SCALE IN MILLIMETERS FOR REDUCED PLANS

DISREGARD PRINTS BEARING EARLIER REVISION DATES

REVISION DATES (PRELIMINARY STAGE)

FILE => I:\bb\04-012001\sas\contract plans and ccs\cco\in progress\cco#27\ggdd04.dgn

100 % PS&E

USERNAME => d1tsnchens DATE PLOTTED => 16 MAR 2001 TIME PLOTTED => 07:35:44

DIST.	COUNTY	ROUTE	KILOMETER POST TOTAL PROJECT	SHEET NO.	TOTAL SHEETS
04	SF	80	13.2/13.9	66851	1204

REGISTERED ENGINEER - CIVIL

02-16-07

PLANS APPROVAL DATE

The State of California or its officers or agents shall not be responsible for the accuracy or completeness of electronic copies of this plan sheet.

REGISTERED PROFESSIONAL ENGINEER James P. Duxbury No. C 64677 Exp. 06/30/07 CIVIL STATE OF CALIFORNIA

T.Y. LIN / MOFFATT & NICHOL
825 BATTERY STREET
SAN FRANCISCO, CA 94111

Caltrans now has a web site! To get to the web site, go to: http://www.dot.ca.gov

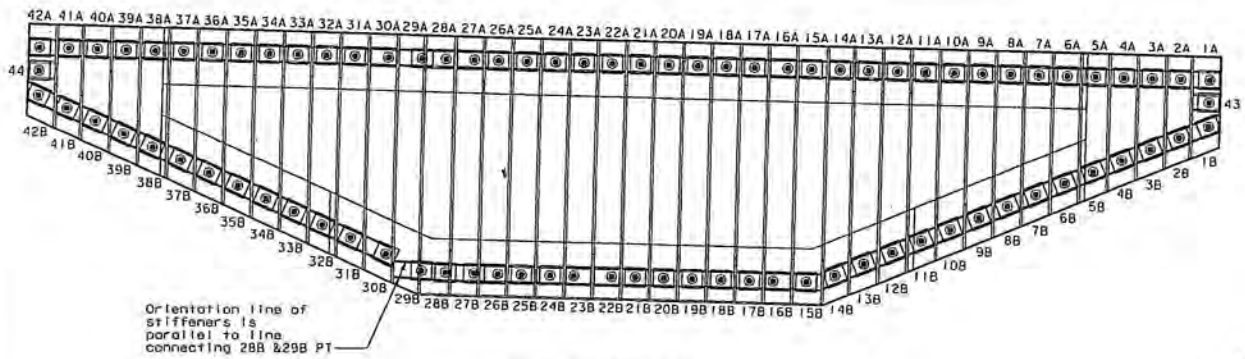

'W' LINE (LOOKING EAST)

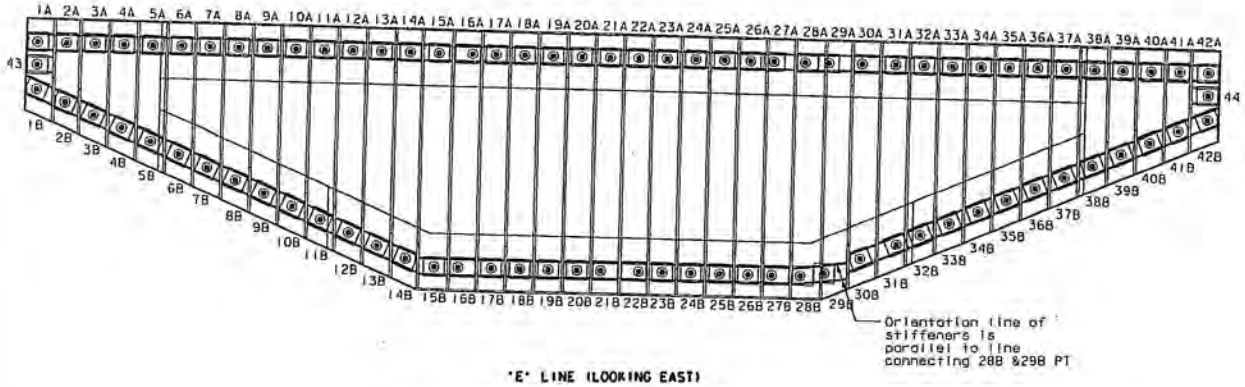

'E' LINE (LOOKING EAST)

BEARING BLOCK PL LAYOUT

1:50

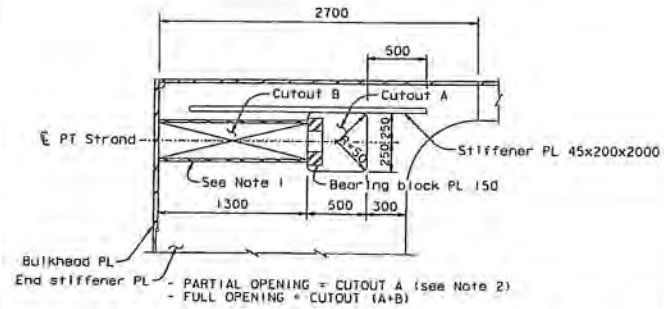

CUTOUT AT END STIFFENER PLATE

1:20

(Nonshrink grout not shown for clarity)

(For details not shown, see Typical Detail of End Stiffener Plate on "Girder At Pier W2 No. 4" sheet.

NOTES:

1. At the Contractor's option the 10 mm PJP weld may be replaced with a 14 mm fillet weld at locations where there are openings in the End Stiffener PL or Long Shear PL only.

2. Cutout opening may be enlarged to accomodate bearing block geometry subject to review and approval of the Engineer.

MARK	DATE	DESCRIPTIONS	BY	CH'D	CCO#
0	02/16/07	BULKHEAD AT GIRDER PIER W2	JD	GB	27

REVISIONS

CONTRACT CHANGE ORDER NO. 27
SHEET 15 OF 18

100 % PS&E

ALL DIMENSIONS ARE IN MILLIMETERS UNLESS OTHERWISE SHOWN

SAN FRANCISCO OAKLAND BAY BRIDGE
EAST SPAN SEISMIC SAFETY PROJECT
SELF-ANCHORED SUSPENSION BRIDGE
(SUPERSTRUCTURE & TOWER)

GIRDER AT PIER ' 10.4A

R. Vallzadeh/V. Taan/Y.L./W.L./F.C.
DESIGN OVERSIGHT
STCH OFF DATE 02/16/07
Rev. Date: 5-18-98

DESIGN	BY J. Duxbury	CHECKED	G. Baker
DETAILS	BY A. Sanjines	CHECKED	M. Nader
QUANTITIES	BY J. Duxbury	CHECKED	A. Sanjines

ORIGINAL SCALE IN MILLIMETERS FOR REDUCED PLANS

PREPARED FOR THE STATE OF CALIFORNIA DEPARTMENT OF TRANSPORTATION

R. Monzanarez
PROJECT ENGINEER

BRIDGE NO. 34-0008L/R
KILOMETER POST 13.2/13.9

CU 04
EA 0120F1

DISREGARD PRINTS BEARING EARLIER REVISION DATES

REVISION DATES (PRELIMINARY STAGE) 02/16/07

SHEET 2515

FILE => I:\bb\04-0120f1\sas\contract plans and cco\cco\in progress\cco*27\sup cco*27\aggdd04s.dgn

USERNAME => ptran DATE PLOTTED => 10 MAY 2007 TIME PLOTTED => 15:01:13

DIST.	COUNTY	ROUTE	KILOMETER POST TOTAL PROJECT	SHEET NO.	TOTAL SHEETS
04	SF	80	13.2/13.9	66852	1204

REGISTERED ENGINEER - CIVIL

02-16-07
PLANS APPROVAL DATE

REGISTERED PROFESSIONAL ENGINEER James P. Duxbury No. C 64677 Exp. 06/30/07 CIVIL STATE OF CALIFORNIA

The State of California or its officers or agents shall not be responsible for the accuracy or completeness of electronic copies of this plan sheet.

T.Y. LIN / MOFFATT & NICHOL
825 BATTERY STREET
SAN FRANCISCO, CA 94111

Caltrans now has a web site! To get to the web site, go to: http://www.dot.ca.gov

Bearing Block Table

WESTBOUND							
PT	Bearing Block	Opening	PT Strand Brg Stiff PL	PT	Bearing Block	Opening	PT Strand Brg Stiff PL
1A	B	None	28x1682	1B	E	None	28x1682
2A	B	None	28x1682	2B	D	None	28x1682
3A	Standard	None	28x1682	3B	C	None	28x1682
4A	Standard	None	28x1682	4B	C	None	28x1682
5A	Standard	None	28x1682	5B	C	None	28x1682
6A	Standard	None	28x1682	6B	C	None	28x1682
7A	Standard	None	28x1682	7B	C	None	28x1682
8A	Standard	None	28x1682	8B	C	None	28x1682
9A	Standard	None	28x1682	9B	C	None	28x1682
10A	Standard	None	28x1682	10B	C	None	28x1682
11A	Standard	None	28x1682	11B	C	None	28x1682
12A	Standard	None	28x1682	12B	C	None	28x1682
13A	Standard	None	28x1682	13B	C	None	28x1682
14A	Standard	None	28x1682	14B	D	None	28x1682
15A	Standard	None	28x1682	15B	Standard	None	28x1682
16A	A	None	28x1682	16B	A	None	28x1682
17A	Standard	None	28x1682	17B	Standard	None	28x1682
18A	Standard	None	28x1682	18B	Standard	None	28x1682
19A	Standard	None	28x1682	19B	Standard	None	28x1682
20A	Standard	None	28x1682	20B	Standard	None	28x1682
21A	Standard	None	28x1682	21B	Standard	None	28x1682
22A	Standard	None	28x1682	22B	A	None	28x1682
23A	Standard	None	28x1682	23B	A	None	28x1682
24A	Standard	None	28x1682	24B	Standard	None	28x1682
25A	Standard	None	28x1682	25B	Standard	None	28x1682
26A	Standard	None	28x1682	26B	A	None	28x1300
27A	A	None	28x1682	27B	Standard	Full Opening	28x1300
28A	A	None	28x1300	28B	Standard	Full Opening	28x1300
29A	Standard	Full Opening	28x1300	29B	Standard	Full Opening	28x1300
30A	A	None	28x1682	30B	Standard	Partial Opening	28x1300
31A	Standard	None	28x1682	31B	C	None	28x1682
32A	Standard	None	28x1682	32B	C	None	28x1682
33A	Standard	None	28x1682	33B	C	None	28x1682
34A	Standard	None	28x1682	34B	C	None	28x1682
35A	Standard	None	28x1682	35B	C	None	28x1682
36A	Standard	None	28x1682	36B	C	None	28x1682
37A	Standard	None	28x1682	37B	C	None	28x1682
38A	Standard	None	28x1682	38B	C	None	28x1682
39A	Standard	None	28x1682	39B	C	None	28x1682
40A	Standard	None	28x1682	40B	C	None	28x1682
41A	B	None	28x1682	41B	D	None	28x1682
42A	B	None	28x1682	42B	E	None	28x1682
43	B	None	35x500				
44	B	None	35x500				

EASTBOUND							
PT	Bearing Block	Opening	PT Strand Brg Stiff PL	PT	Bearing Block	Opening	PT Strand Brg Stiff PL
1A	B	None	28x1682	1B	E	None	28x1682
2A	B	None	28x1682	2B	D	None	28x1682
3A	Standard	None	28x1682	3B	C	None	28x1682
4A	Standard	None	28x1682	4B	C	None	28x1682
5A	Standard	None	28x1682	5B	C	None	28x1682
6A	Standard	None	28x1682	6B	C	None	28x1682
7A	Standard	None	28x1682	7B	C	None	28x1682
8A	Standard	None	28x1682	8B	C	None	28x1682
9A	Standard	None	28x1682	9B	C	None	28x1682
10A	Standard	None	28x1682	10B	C	None	28x1682
11A	Standard	None	28x1682	11B	C	None	28x1682
12A	Standard	None	28x1682	12B	C	None	28x1682
13A	Standard	None	28x1682	13B	C	None	28x1682
14A	Standard	None	28x1682	14B	D	None	28x1682
15A	Standard	None	28x1682	15B	Standard	None	28x1682
16A	A	None	28x1682	16B	A	None	28x1682
17A	Standard	None	28x1682	17B	Standard	None	28x1682
18A	Standard	None	28x1682	18B	Standard	None	28x1682
19A	Standard	None	28x1682	19B	Standard	None	28x1682
20A	Standard	None	28x1682	20B	Standard	None	28x1682
21A	Standard	None	28x1682	21B	A	None	28x1682
22A	Standard	None	28x1682	22B	A	None	28x1682
23A	Standard	None	28x1682	23B	Standard	None	28x1682
24A	Standard	None	28x1682	24B	Standard	None	28x1682
25A	Standard	None	28x1682	25B	Standard	None	28x1682
26A	Standard	None	28x1300	26B	Standard	None	28x1682
27A	Standard	Partial Opening	28x1300	27B	A	None	28x1682
28A	A	None	28x1300	28B	A	None	28x1300
29A	Standard	Full Opening	28x1300	29B	Standard	Full Opening	28x1300
30A	A	None	28x1682	30B	E	None	28x1682
31A	Standard	None	28x1682	31B	Standard	Partial Opening	28x1300
32A	Standard	None	28x1682	32B	C	None	28x1300
33A	Standard	None	28x1682	33B	C	None	28x1682
34A	Standard	None	28x1682	34B	C	None	28x1682
35A	Standard	None	28x1682	35B	C	None	28x1682
36A	Standard	None	28x1682	36B	C	None	28x1682
37A	Standard	None	28x1682	37B	C	None	28x1682
38A	Standard	None	28x1682	38B	C	None	28x1682
39A	Standard	None	28x1682	39B	C	None	28x1682
40A	Standard	None	28x1682	40B	C	None	28x1682
41A	B	None	28x1682	41B	D	None	28x1682
42A	B	None	28x1682	42B	E	None	28x1682
43	B	None	35x500				
44	B	None	35x500				

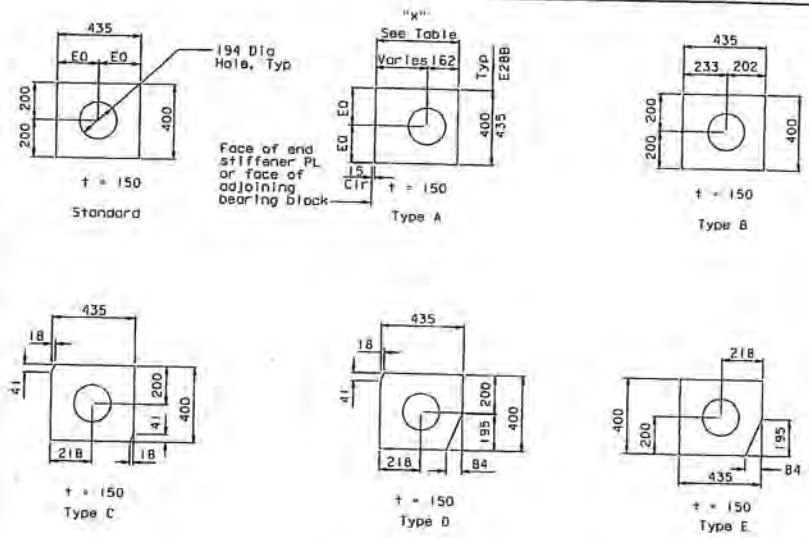

BEARING BLOCK TYPES

Bearing Block Type A Table

WESTBOUND					
PT	Bearing Block	x	PT	Bearing Block	x
16A	A	525	16B	A	525
27A	A	525	22B	A	525
28A	A	435	23B	A	525
30A	A	525	26B	A	435

EASTBOUND					
PT	Bearing Block	x	PT	Bearing Block	x
16A	A	525	16B	A	525
28A	A	435	21B	A	525
30A	A	525	22B	A	525
			27B	A	525
			28B*	A	435

*Note: Bearing Block 28B shall be 435x435

MARK	DATE	DESCRIPTIONS	BY	CH'D	CCO*
1	02/15/07	BULKHEAD AT GIRDER PIER W2	JD	GB	27

REVISIONS

CONTRACT CHANGE ORDER NO. 27
SHEET 16 OF 18

100 % PSSE

ALL DIMENSIONS ARE IN MILLIMETERS UNLESS OTHERWISE SHOWN

R. Vallzadeh/Y. Tean/Y.L./W.L./F.C.
DESIGN OVERSIGHT
Y. Lin
STOP OFF DATE 02/15/07
Rev. Date 5-15-98

DESIGN	BY J. Duxbury	CHECKED G. Bakar	
DETAILS	BY A. Sanjines	CHECKED M. Nader	
QUANTITIES	BY J. Duxbury	CHECKED A. Sanjines	

ORIGINAL SCALE IN MILLIMETERS FOR REDUCED PLANS

PREPARED FOR THE STATE OF CALIFORNIA DEPARTMENT OF TRANSPORTATION

R. Manzanarez
PROJECT ENGINEER

CU 04
EA 0120F1

BRIDGE NO. 34-0006L/R
KILOMETER POST 13.2/13.9

SAN FRANCISCO OAKLAND BAY BRIDGE
EAST SPAN SEISMIC SAFETY PROJECT
SELF-ANCHORED SUSPENSION BRIDGE
(SUPERSTRUCTURE & TOWER)

GIRDER AT PIER W2.4B

DISCARD PRIMES BEARING EARLIER REVISION DATES
REVISION DATES PRELIMINARY STAGE
REVISED

SHEET 25152 OF

FILE => I:\00\04-0120F1\sos\contract plans and cos\cco\in progress\cco=27\sub cco=27\bggdd0462.dgn

USERNAME => DYSON DATE PLOTTED => 10 MAY 2007 TIME PLOTTED => 15:09:03

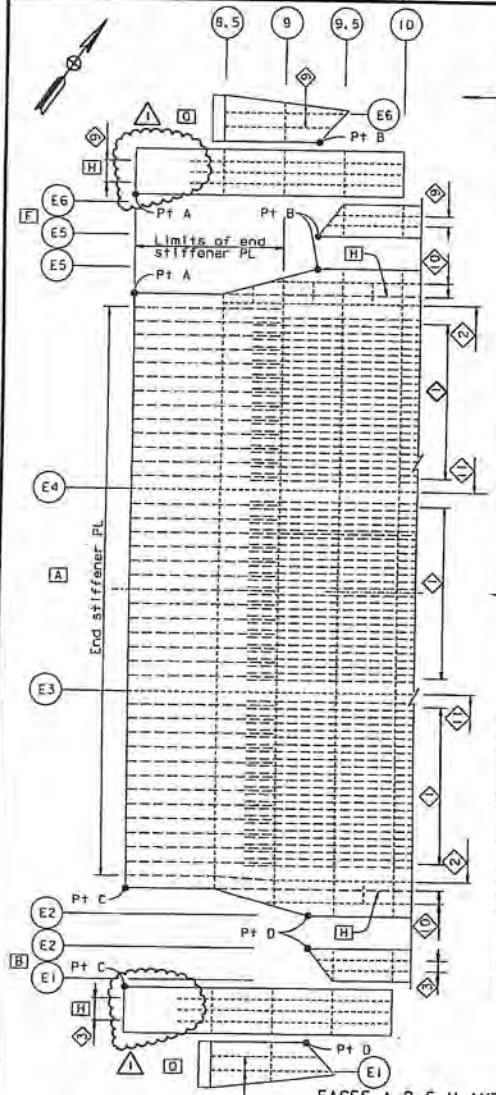

FACES A, B, F, H AND O
("E" LINE SHOWN, "W" LINE SIMILAR)

TOP GIRDER FACE LAYOUT

1:100

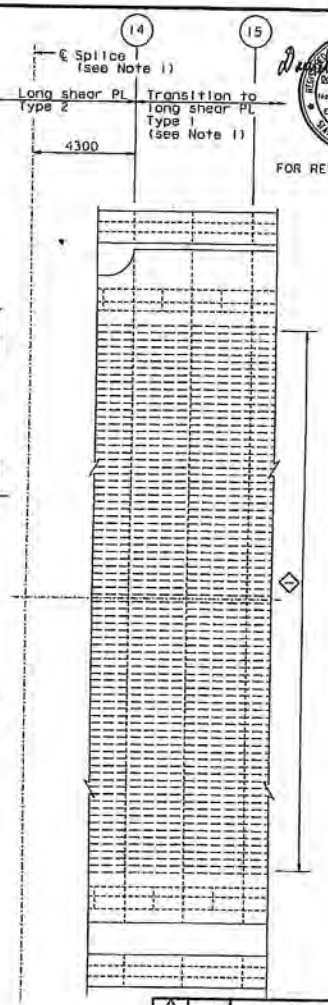

FOR REVISIONS ONLY

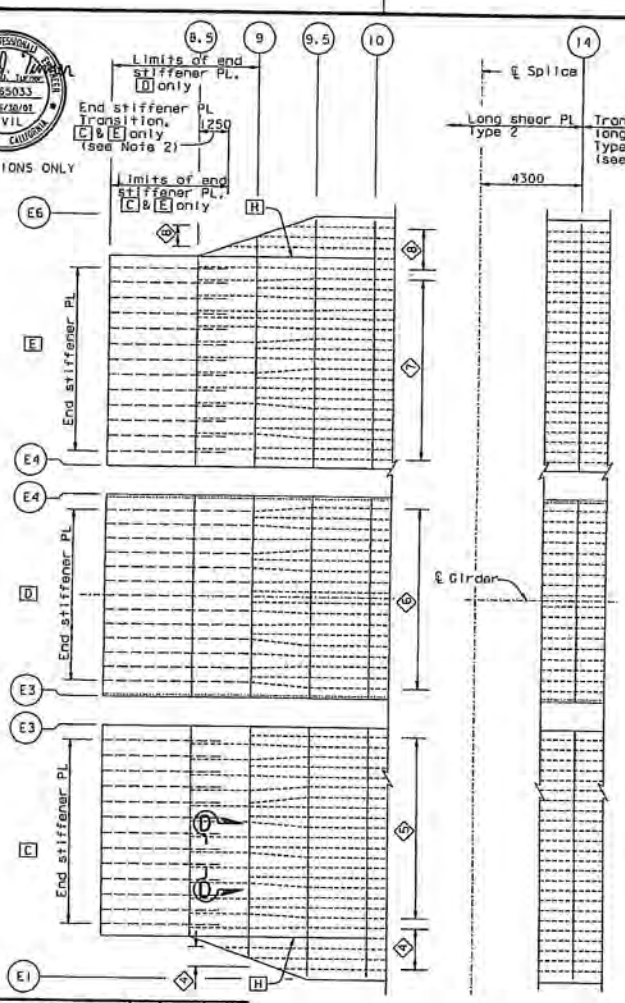

FACES C, D AND E
("E" LINE SHOWN, "W" LINE SIMILAR)

BOTTOM GIRDER FACE LAYOUT

1:100

ALL DIMENSIONS ARE IN MILLIMETERS UNLESS OTHERWISE SHOWN

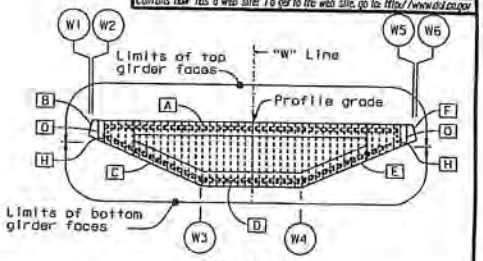

"W" LINE

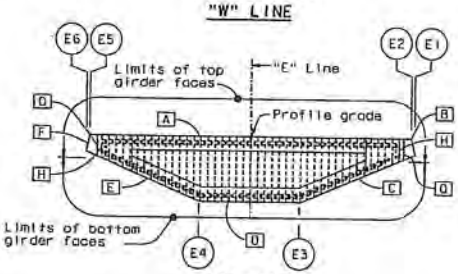

"E" LINE

KEY CROSS SECTIONS

1:200

LEGEND:

- D — Girder face designation D
- Stiffener type 4, 5, 6, 7 or 8
- Longitudinal stiffener Type 1 leg or End stiffener PL
- Longitudinal stiffener Type 1 or 2
- 4 — Stiffener Type 4 designation

NOTES:

1. For longitudinal shear plate transition details, see "Typical Girder Details No. 7" sheet.
2. For Section D-D end stiffener plate transition details for C and E, see "Girder At Pier W2 No. 6" sheet.

MARK	DATE	DESCRIPTIONS	BY	CH'D	CCO#
1	02/16/07	BULKHEAD AT GIRDER PIER W2	AS	DT	27

REVISIONS

CONTRACT CHANGE ORDER NO. 27
SHEET 17 OF 18

DIST.	COUNTY	ROUTE	KILOMETER POST TOTAL PROJECT	SHEET NO.	TOTAL SHEETS
04	SF	80	13.2/13.9	669R1	1204

George Baker
REGISTERED ENGINEER - CIVIL
12-6-04
PLANS APPROVAL DATE

The State of California or its officers or agents shall not be responsible for the accuracy or completeness of electronic copies of this plan sheet.

T.Y. LIN / MOFFATT & NICHOL
825 BATTERY STREET
SAN FRANCISCO, CA 94111

Caltrans now has a web site! To get to the web site, go to: http://www.dot.ca.gov

B. Vollzadeh/V. Toon/Y.L./N.L./F.C.
DESIGN OVERSIGHT
STEM DPT DATE 02/16/07
Rev. Date: 5-15-99

DESIGN	BY G. Baker	CHECKED	P. Ritchie
DETAILS	BY M. Gulyas	CHECKED	T. McNeans
QUANTITIES	BY C. Mauch	CHECKED	M. Roberts

ORIGINAL SCALE IN MILLIMETERS FOR REDUCED PLANS

PREPARED FOR THE STATE OF CALIFORNIA DEPARTMENT OF TRANSPORTATION

R. Manzanarez
PROJECT ENGINEER

BRIDGE NO. 34-0006L/R
KILOMETER POST 13.2/13.9
CU 04
EA 0120F1

SAN FRANCISCO OAKLAND BAY BRIDGE
EAST SPAN SEISMIC SAFETY PROJECT
SELF-ANCHORED SUSPENSION BRIDGE
(SUPERSTRUCTURE & TOWER)

GIRDER AT PIER NO. 5

DISREGARD PRINTS BEARING EARLIER REVISION DATES

REVISION DATES (PRELIMINARY STAGE)

SHEET 252R1 OF

FILE => J:\bb\04-0120f1\sas\contract plans and cos\cco\in progress\cco27\cggad05.dgn

100 % PS&E

USERNAME => oldhomes DATE PLOTTED => 16 MAR 2007 TIME PLOTTED => 07:39:34

DIST.	COUNTY	ROUTE	KILOMETER POST TOTAL PROJECT	SHEET NO.	TOTAL SHEETS
04	SF	80	13.2/13.9	670R1	1204

George Baker
REGISTERED ENGINEER - CIVIL
12-6-04
PLANS APPROVAL DATE

REGISTERED PROFESSIONAL ENGINEER George S. Baker No. C 57112 Exp. 12/31/05 CIVIL STATE OF CALIFORNIA

The State of California or its officers or agents shall not be responsible for the accuracy or completeness of electronic copies of this plan sheet.

T.Y. LIN / MOFFATT & NICHOL
825 BATTERY STREET
SAN FRANCISCO, CA 94111

Caltrans now has a web site! To get to the web site, go to http://www.dot.ca.gov

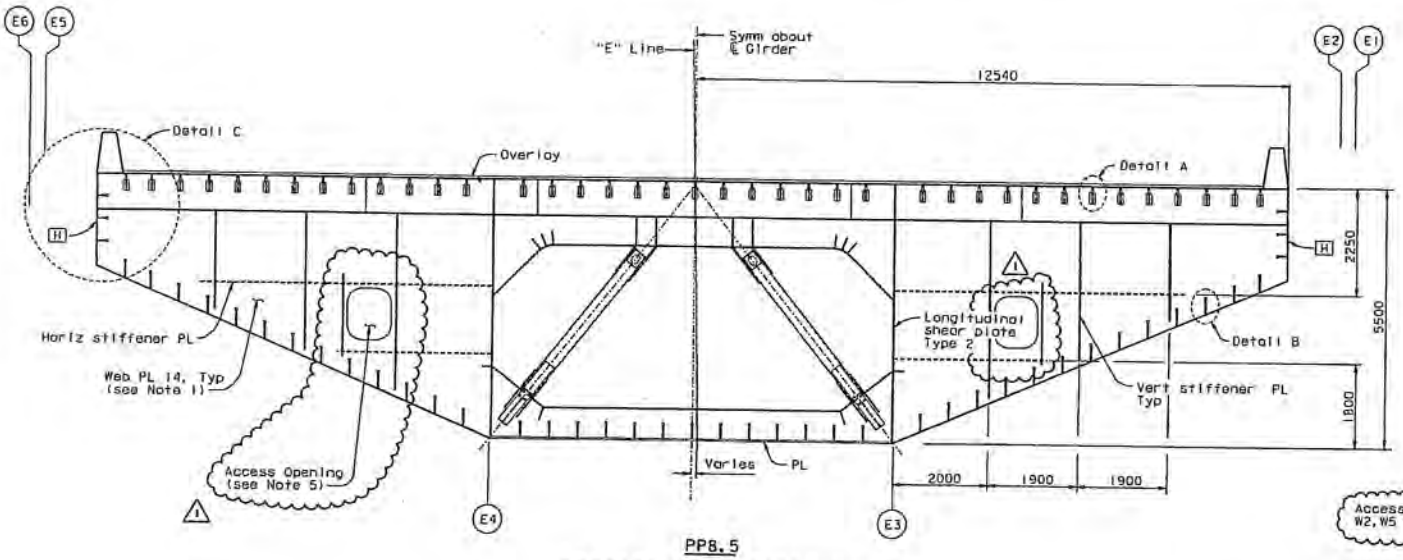

PP8.5
SECTION AT FLOORBEAM
1:50

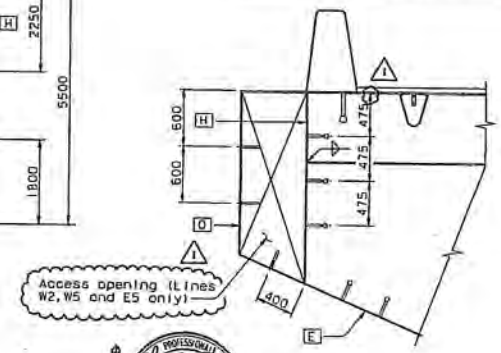

AT PP9
DETAIL C
1:25

REGISTERED PROFESSIONAL ENGINEER Donald J. Turner No. C 65033 Exp. 09/30/07 CIVIL STATE OF CALIFORNIA

FOR REVISIONS ONLY

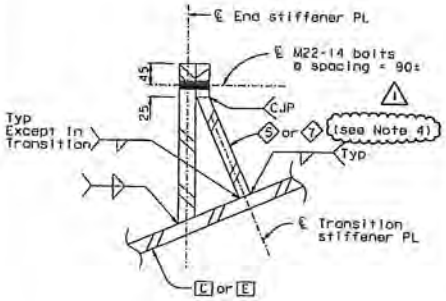

SECTION D-D
END STIFFENER TRANSITION DETAIL
1:5

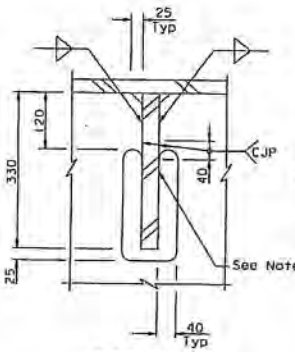

DETAIL A
1:5

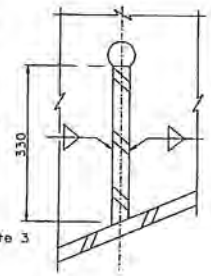

DETAIL B
1:5

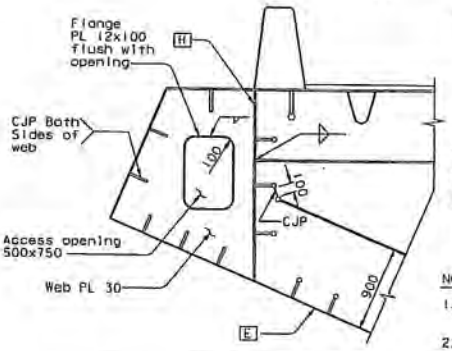

AT PP9.5, PP10
DETAIL C
1:25

MARK	DATE	DESCRIPTIONS	BY	CH'D	CCO#
1	02/16/07	BULKHEAD AT GIRDER PIER W2	AS	DT	27
		REVISIONS			

CONTRACT CHANGE ORDER NO. 27
SHEET 18 OF 18

NOTES:

1. For web PL sizes at chevron braces, see "Typical Floorbeam Details No.2" sheet.
2. For details not shown, see "Typical Floorbeam Details" sheets.
3. Grind off end of CJP welds. Provide 12 mm trailer with transition to cut-out. See similar detail A on "Typical Girder Details No.4" sheet. Grind opening to 6 micron finish in accordance with ANSI B46.1.
4. Stiffeners 5 and 7 may be terminated without transition taper at 50 mm east of PP8.5.
5. For Access Opening details, see "Typical Floorbeam Details No. 1" sheet.

ALL DIMENSIONS ARE IN MILLIMETERS UNLESS OTHERWISE SHOWN

R. Valizadeh/V.Tsao/Y.L./N.L./F.C.
DESIGN OVERSIGHT
Y Lu
STON GFT DATE 02/16/07
Rev. Date 3-13-96

DESIGN	BY G. Baker	CHECKED	P. Ritchie
DETAILS	BY S. Cano	CHECKED	T. McMeans
QUANTITIES	BY C. Mauch	CHECKED	M. Roberts

ORIGINAL SCALE IN MILLIMETERS FOR REDUCED PLANS 0 10 20 30 40 50 60 70 80 90 100

PREPARED FOR THE STATE OF CALIFORNIA DEPARTMENT OF TRANSPORTATION

R. Manzanarez
PROJECT ENGINEER

BRIDGE NO. 34-0006L/R
KILOMETER POST 13.2/13.9
CU 04
EA 0120F1

DESIGNED PRINTS BEARING EARLIER REVISION DATES

REVISION DATES (PRELIMINARY STAGE) 3/20/97 3/20/97 3/20/97 3/20/97 3/20/97 3/20/97 12/04/97

SAN FRANCISCO OAKLAND BAY BRIDGE
EAST SPAN SEISMIC SAFETY PROJECT
SELF-ANCHORED SUSPENSION BRIDGE
(SUPERSTRUCTURE & TOWER)

GIRDER AT PIER NO. 6

SHEET 253R1 OF

FILE => f:\bb\04-01201\sas\contract plans and cos\cco\in progress\cco-27\ogpd0050.dgn

USERNAME => atlsmonsky DATE PLOTTED => 15 MAR 2007 TIME PLOTTED => 07:40:44

100 % PSSE

STATE OF CALIFORNIA - DEPARTMENT OF TRANSPORTATION

CONTRACT CHANGE ORDER MEMORANDUM

DC-CEM-4903 (OLD HC-39 REV. 6/93) CT# 7541-3544-0

DATE: 3/9/2010

TO Pete Siegenthaler, Principal TE	FILE 04-0120F4 04-SF-80-13.2/13.9
FROM Gary Pursell, STE / Richard Morrow, SBE	
CCO NO. **27** / SUPPLEMENT NO. **0** / CATEGORY CODE **CHPT**	CONTINGENCY BALANCE (including this change) **$8,014,909.40**
$0.00 INCREASE ☐ DECREASE ☐	HEADQUARTERS APPROVAL REQUIRED? YES ☐ NO ☒
SUPPLEMENTAL FUNDS PROVIDED $	IS THIS REQUEST IN ACCORDANCE WITH ENVIRONMENTAL DOCUMENTS? YES ☒ NO ☐
CCO DESCRIPTION: Bearing Block + OBG Access Cutout	**PROJECT DESCRIPTION** CONSTRUCT SELF-ANCHORED SUSPENSION BRIDGE

Original Contract Time	Time Adj.: This Change	Previously Approved CCO Time Adjustments	Percentage Time Adjusted: (including this change)	Total # of Unreconciled Deferred Time CCO(s): (including this change)
2490 Day(s)	**0** Day(s)	**227** Day(s)	**9** %	**6**

THIS CHANGE ORDER PROVIDES FOR:

Modifying dimension and thickness of bearing blocks and providing a larger, and slightly relocated access opening for placing bearing blocks, tendon anchors and pre-stressing jacks during the installation of the continuity tendons from W2 to the OBG.

Bearing blocks shall be modified to avoid conflicts with OBG bearing plates. W2 continuity tendons have conflicts in the W2 cap beam and in some cases they penetrated into the steel OBG in conflict or near the edge of the stiffener plates. It was determined the best solution is to custom fit the bearing blocks rather than redesign the tendon layout. Access openings were redesigned to provide adequate clearance for installation of stressing components.

For the dimensional change to the bearing blocks, the decrease in the contract items at contract item prices result in a net decrease of $9,590.00, which can be returned to the available contingency funds. To perform additional detailing, mill stiffener plate, cutting openings, fabricate rings, install trumpets, and changes in character of work to paint the structural steel affected by this change, the Contractor will be paid the lump sum payment of $78,141.00. A detailed cost analysis is on file.

Since the net cost, of $68.551.00 in this change, is included in Contract Change Order 108 Supplement 1 (CCO 108S1) Claim Settlement Report No. 1 resolution costs, the net payment in this change order is zero.

A determination of the delay in completion of the contract due to work specified by Contract Change Order 27, has been made in CCO 108S1 and is part of the Claims Settlement Report (CSR) No. 1 for this project. Therefore, no adjustment of time is warranted by reason of this change order.

This change order received concurrences from Gary Pursell (Resident Engineer), Rick Morrow (Structure Rep.), Patrick Treacy (HQ Liaison), Peter Siegenthaler (Principal Engineer), Marwan Nader (Design of Record), Wenyi Long (OSCM Oversight), Lina Ellis (OSMI Oversight) and Ken Terpstra (Project Manager).

Claims Settlement Report (CSR) No. 1, for this project, revises the authority to "Issue and Approve" the changes listed in CCO 108S1 Appendices A & B. The authority to "Issue and Approve" the changes listed in Appendices A & B for the values of time and money contemplated therein has been delegated to the District for approval and approval of each of these change orders by the Headquarters CCO Desk will not be required. Since this change order is included in CCO 108S1 no Headquarters CCO Desk "Issue and Approve" is required, a copy of CCO 108S1 is attached for reference.

STATE OF CALIFORNIA - DEPARTMENT OF TRANSPORTATION

CONTRACT CHANGE ORDER MEMORANDUM

DC-CEM-4903 (OLD HC-39 REV. 6/93) CT# 7541-3544-0

DATE: 3/9/2010

CONCURRED BY:	
CONSTRUCTION ENGINEER Res. Eng. Gary Pursell, Sup. TE	DATE 2/22/07
SR. BRIDGE ENGINEER Rick Morrow, Sup. BE	DATE 2/22/07
FHWA REPRESENTATIVE	DATE
PROJECT MANAGER Proj. Manager, Ken Terpstra	DATE 8/24/07
OTHER (SPECIFY) HQ, Patrick Treacy	DATE 2/23/07
PCE, Peter Siegenthaler, Prin TE	DATE 2/23/07
DISTRICT PRIOR APPROVAL BY	DATE
HQ (ISSUE & APPROVE) (TO PROCEED) BY Bob Molera (ISSUE & APPROVE)	DATE 12/31/09
RESIDENT ENGINEER SIGNATURE Gary Pursell	DATE 3/11/10

ESTIMATE OF COST

	THIS REQUEST	TOTAL TO DATE
ITEMS	($9,590.00)	($9,590.00)
FORCE ACCOUNT	$0.00	$0.00
AGREED PRICE	$0.00	$0.00
ADJUSTMENT	$9,590.00	$9,590.00
TOTAL	$0.00	$0.00

FEDERAL PARTICIPATION

☐ PARTICIPATING ☐ PARTICIPATING IN PART ☒ NONE
☐ NON-PARTICIPATING (MAINTENANCE) ☐ NON-PARTICIPATING

FEDERAL SEGREGATION (IF MORE THAN ONE FUNDING SOURCE OR P.I.P. TYPE)
☐ CCO FUNDED PER CONTRACT ☐ CCO FUNDED AS FOLLOWS

FEDERAL FUNDING SOURCE	PERCENT

HC-39 Word(Rev.9/98)

DIST.	COUNTY	ROUTE	KILOMETER POST TOTAL PROJECT	SHEET NO.	TOTAL SHEETS
04	SF	80	13.2/13.9	466R3	1204

REGISTERED ENGINEER - CIVIL

12-6-04
PLANS APPROVAL DATE

REGISTERED PROFESSIONAL ENGINEER John Sun No. C 54648 Exp. 12/31/05 CIVIL STATE OF CALIFORNIA

The State of California or its officers or agents shall not be responsible for the accuracy or completeness of electronic copies of this plan sheet.

T.Y. LIN / MOFFATT & NICHOL
825 BATTERY STREET
SAN FRANCISCO, CA 94111

Caltrans now has a web site! To get to the web site, go to: http://www.dot.ca.gov

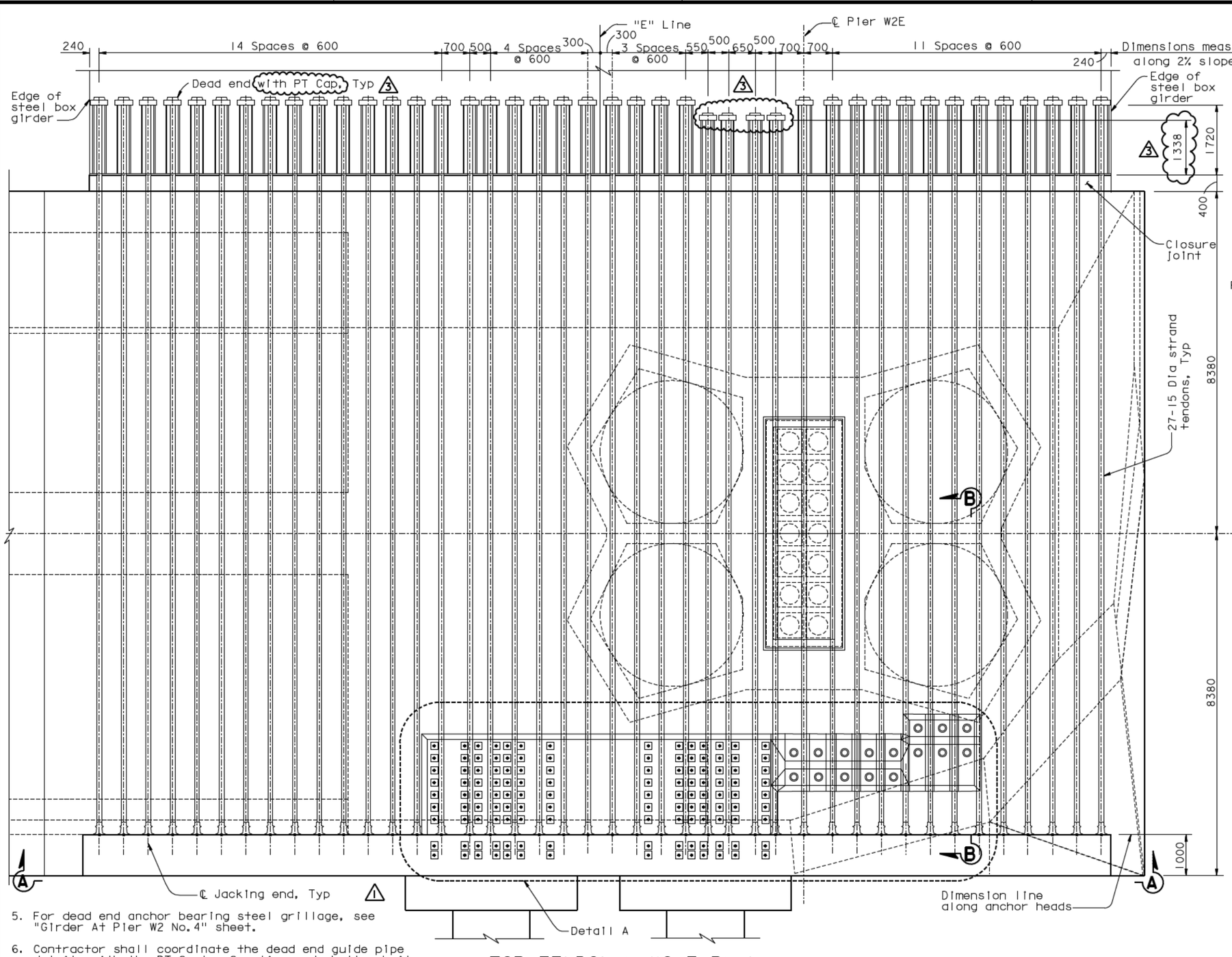

TOP TENDON LAYOUT PLAN ("E" Line)
1:50

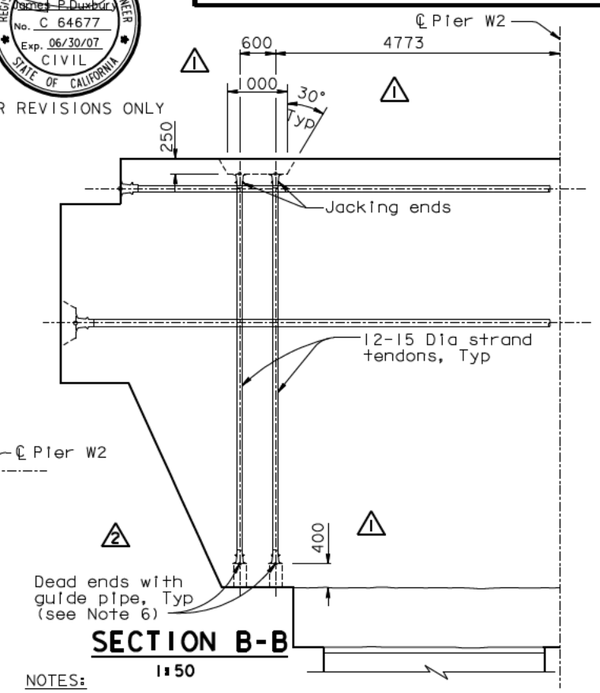

SECTION B-B
1:50

NOTES:

1. For Section A-A, see "W2 Cap Beam Post-Tensioning Details No.9" sheet.
2. For Detail A, see "W2 Cap Beam Post-Tensioning Details No.10" sheet.
3. All W2 cap beam continuity tendons are ASTM A416 Grade 270 (fu=1860 MPa), low relaxation, 27-15 Dia seven wire strand PT, unless specified otherwise. For additional prestressing details, see "Prestressing Notes" sheet.
4. For blockout details, see "W2 Cap Beam Blockout Details" sheets.
5. For dead end anchor bearing steel grillage, see "Girder At Pier W2 No.4" sheet.
6. Contractor shall coordinate the dead end guide pipe details with the PT System Supplier and shall submit them to the Engineer for review and approval. Contractor shall grout the guide pipe after stressing operations have been completed.

MARK	DATE	DESCRIPTIONS	BY	CH'D	CCO#
3	02/16/07	BULKHEAD AT GIRDER PIER W2	JD	AS	27
2	01/31/07	CORROSION PROTECTION	JD	AS	16
1	07/21/06	W2 CAP BEAM ISD	JD	NV	23

REVISIONS

CONTRACT CHANGE ORDER NO. ____
SHEET ____ OF ____

ALL DIMENSIONS ARE IN MILLIMETERS UNLESS OTHERWISE SHOWN

SAN FRANCISCO OAKLAND BAY BRIDGE
EAST SPAN SEISMIC SAFETY PROJECT
SELF-ANCHORED SUSPENSION BRIDGE
(SUPERSTRUCTURE & TOWER)

W2 CAP BEAM POST-TENSIONING DETAILS NO.5

R. Valizadeh/V.Toan/Y.L./W.L./F.C.
DESIGN OVERSIGHT
SIGN OFF DATE 02/16/07

	BY	CHECKED
DESIGN	J. Sun	M. Chen
DETAILS	J. Duxbury	M. Chen
QUANTITIES	S. Shi	D. Harrison

PREPARED FOR THE STATE OF CALIFORNIA DEPARTMENT OF TRANSPORTATION

R. Manzanarez
PROJECT ENGINEER

BRIDGE NO. 34-0006L/R
KILOMETER POST 13.2/13.9

Rev. Date: 5-18-98

ORIGINAL SCALE IN MILLIMETERS FOR REDUCED PLANS 0 10 20 30 40 50 60 70 80 90 100

CU 04
EA 0120F1

DISREGARD PRINTS BEARING EARLIER REVISION DATES

REVISION DATES (PRELIMINARY STAGE ONLY) 08/02/99 05/31/01 04/08/02 07/01/02 12/19/02

SHEET 049R3 OF

FILE -> I:\bb\04-012001\sas\contract plans and cco\cco\in progress\cco#27\aecpt05.dgn

USERNAME => visitor DATE PLOTTED => 15 MAR 2007 TIME PLOTTED => 15:51:56

100 % PS&E

DIST.	COUNTY	ROUTE	KILOMETER POST TOTAL PROJECT	SHEET NO.	TOTAL SHEETS
04	SF	80	13.2/13.9	467R2	1204

REGISTERED ENGINEER - CIVIL

12-6-04
PLANS APPROVAL DATE

REGISTERED PROFESSIONAL ENGINEER John Sun No. C 54648 Exp. 12/31/05 CIVIL STATE OF CALIFORNIA

The State of California or its officers or agents shall not be responsible for the accuracy or completeness of electronic copies of this plan sheet.

T.Y. LIN / MOFFATT & NICHOL
825 BATTERY STREET
SAN FRANCISCO, CA 94111

Caltrans now has a web site! To get to the web site, go to: http://www.dot.ca.gov

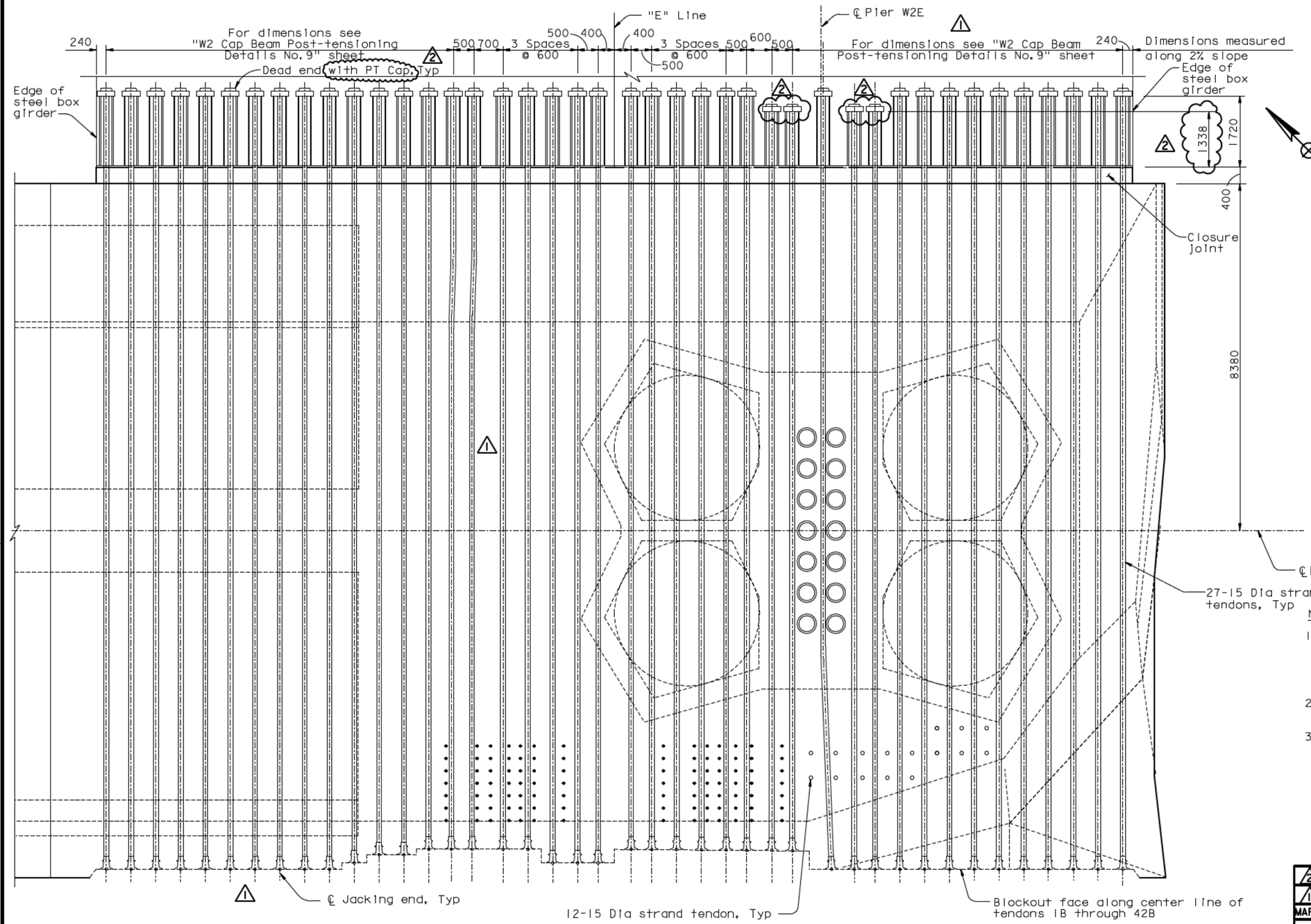

NOTES:

1. All W2 cap beam continuity tendons are ASTM A416 Grade 270 (fu=1860 MPa), low relaxation, 27-15 Dia seven wire strand PT, unless specified otherwise. For additional prestressing details, see "Prestressing Notes" sheet.
2. For blockout details, see "W2 Cap Beam Blockout Details" sheets.
3. For dead end anchor bearing steel grillage, see "Girder At Pier W2 No. 4" sheet.

REGISTERED PROFESSIONAL ENGINEER Charles P. Duxbur No. C 64677 Exp. 06/30/07 CIVIL STATE OF CALIFORNIA

FOR REVISIONS ONLY

MARK	DATE	DESCRIPTIONS	BY	CH'D	CCO#
2	02/16/07	BULKHEAD AT GIRDER PIER W2	JD	AS	27
1	07/21/06	W2 CAP BEAM ISD	JD	NV	23

REVISIONS

CONTRACT CHANGE ORDER NO. ____
SHEET ___ OF ___

100 % PS&E

BOTTOM TENDON LAYOUT PLAN ("E Line")

1:50

ALL DIMENSIONS ARE IN MILLIMETERS UNLESS OTHERWISE SHOWN

SAN FRANCISCO OAKLAND BAY BRIDGE
EAST SPAN SEISMIC SAFETY PROJECT
SELF-ANCHORED SUSPENSION BRIDGE
(SUPERSTRUCTURE & TOWER)

W2 CAP BEAM POST-TENSIONING DETAILS NO. 6

R. Vallzadeh/V. Toan/Y.L./W.L./F.C.
DESIGN OVERSIGHT
SIGN OFF DATE 02/16/07

	BY	CHECKED
DESIGN	J. Sun	M. Chen
DETAILS	J. Duxbury	M. Chen
QUANTITIES	S. Shi	D. Harrison

PREPARED FOR THE STATE OF CALIFORNIA DEPARTMENT OF TRANSPORTATION

R. Manzanarez
PROJECT ENGINEER

BRIDGE NO. 34-0006L/R
KILOMETER POST 13.2/13.9

CU 04
EA 0120F1

DISREGARD PRINTS BEARING EARLIER REVISION DATES

REVISION DATES (PRELIMINARY STAGE ONLY): 08/28/99 05/24/01 04/08/02 07/24/02 12/19/02

SHEET 050R2 OF

Rev. Date: 5-18-98

ORIGINAL SCALE IN MILLIMETERS FOR REDUCED PLANS 0 10 20 30 40 50 60 70 80 90 100

FILE -> I:\bb\04-012001\sas\contract plans and cco\cco\In progress\cco#27\aecpt06.dgn

USERNAME => vistor DATE PLOTTED => 15 MAR 2007 TIME PLOTTED => 16:06:07

DIST.	COUNTY	ROUTE	KILOMETER POST TOTAL PROJECT	SHEET NO.	TOTAL SHEETS
04	SF	80	13.2/13.9	468R3	1204

REGISTERED ENGINEER - CIVIL

12-6-04
PLANS APPROVAL DATE

REGISTERED PROFESSIONAL ENGINEER John Sun No. C 54648 Exp. 12/31/05 CIVIL STATE OF CALIFORNIA

The State of California or its officers or agents shall not be responsible for the accuracy or completeness of electronic copies of this plan sheet.

T.Y. LIN / MOFFATT & NICHOL
825 BATTERY STREET
SAN FRANCISCO, CA 94111

Caltrans now has a web site! To get to the web site, go to: http://www.dot.ca.gov

Caltrans Metric

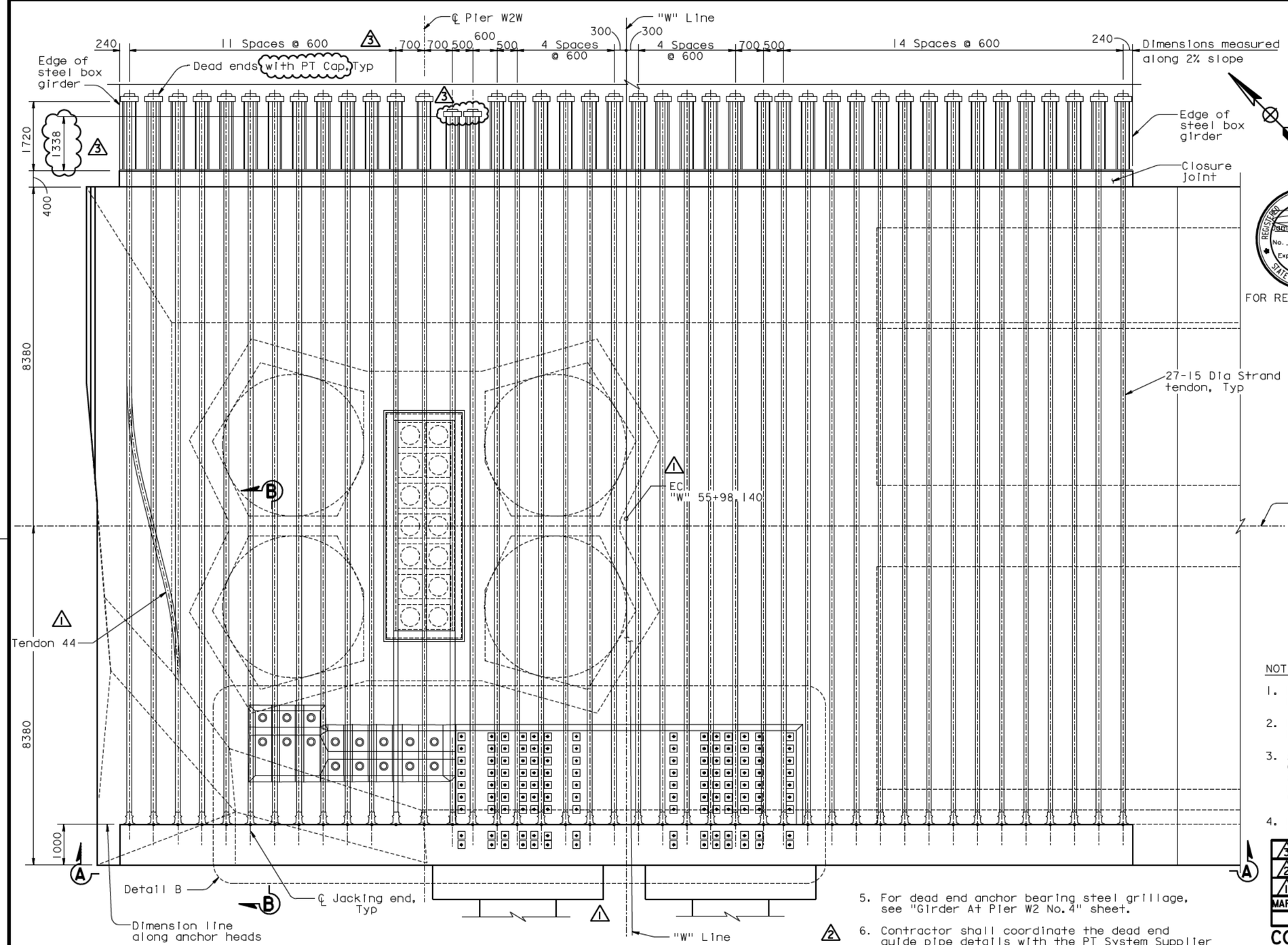

TOP TENDON LAYOUT PLAN ("W" Line)

1:50

ALL DIMENSIONS ARE IN MILLIMETERS UNLESS OTHERWISE SHOWN

REGISTERED PROFESSIONAL ENGINEER James P. Duxbury No. C 64677 Exp. 06/30/07 CIVIL STATE OF CALIFORNIA

FOR REVISIONS ONLY

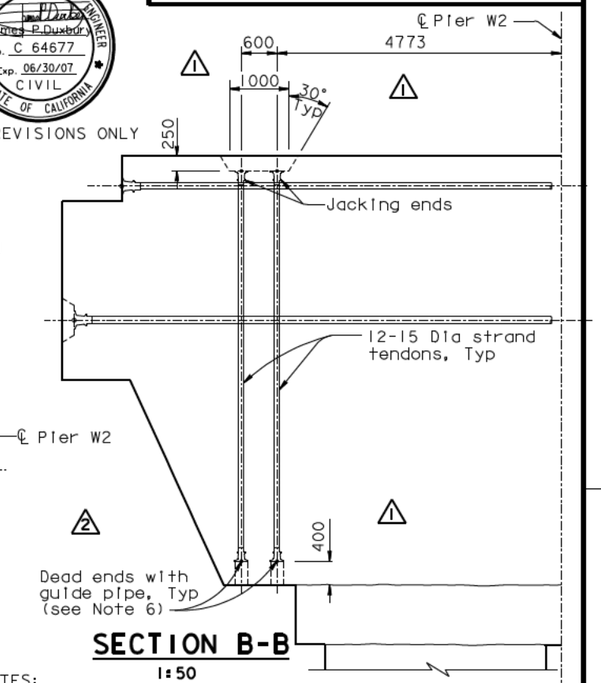

SECTION B-B

1:50

NOTES:

1. For Section A-A, see "W2 Cap Beam Post-Tensioning Details No. 9" sheet.
2. For Detail B, see "W2 Cap Beam Post-Tensioning Details No. 10" sheet.
3. All W2 cap beam continuity tendons are ASTM A416 Grade 270 (fu=1860 MPa), low relaxation, 27-15 Dia seven wire strand PT, unless specified otherwise. For additional prestressing details, see "Prestressing Notes" sheet.
4. For blockout details, see "W2 Cap Beam Blockout Details" sheets.
5. For dead end anchor bearing steel grillage, see "Girder At Pier W2 No. 4" sheet.
6. Contractor shall coordinate the dead end guide pipe details with the PT System Supplier and shall submit them to the Engineer for review and approval. Contractor shall grout the guide pipe after stressing operations have been completed.

MARK	DATE	DESCRIPTIONS	BY	CH'D	CCO#
3	02/16/07	BULKHEAD AT GIRDER PIER W2	JD	AS	27
2	01/31/07	CORROSION PROTECTION	JD	AS	16
1	07/21/06	W2 CAP BEAM ISD	JD	NV	23

REVISIONS

CONTRACT CHANGE ORDER NO. ____
SHEET ____ OF ____

100 % PS&E

TIME PLOTTED => 16:04:55
DATE PLOTTED => 15 MAR 2007
USERNAME => visitor

SAN FRANCISCO OAKLAND BAY BRIDGE
EAST SPAN SEISMIC SAFETY PROJECT
SELF-ANCHORED SUSPENSION BRIDGE
(SUPERSTRUCTURE & TOWER)

W2 CAP BEAM POST-TENSIONING DETAILS NO. 7

R. Valizadeh/V. Toan/Y.L./W.L./F.C.
DESIGN OVERSIGHT
SIGN OFF DATE 02/18/07

DESIGN	BY J. Sun	CHECKED M. Chen	
DETAILS	BY J. Duxbury	CHECKED M. Chen	
QUANTITIES	BY S. Shi	CHECKED D. Harrison	

PREPARED FOR THE STATE OF CALIFORNIA DEPARTMENT OF TRANSPORTATION

R. Manzanarez
PROJECT ENGINEER

BRIDGE NO. 34-0006L/R
KILOMETER POST 13.2/13.9

CU 04
EA 0120F1

Rev. Date: 5-18-98

ORIGINAL SCALE IN MILLIMETERS FOR REDUCED PLANS 0 10 20 30 40 50 60 70 80 90 100

DISREGARD PRINTS BEARING EARLIER REVISION DATES 08/28/99 05/31/01 04/08/02 07/01/02 12/19/02

SHEET 051R3 OF

FILE -> I:\bb\04-012001\sas\contract plans and cco\cco\in progress\cco#27\aecpt07.dgn

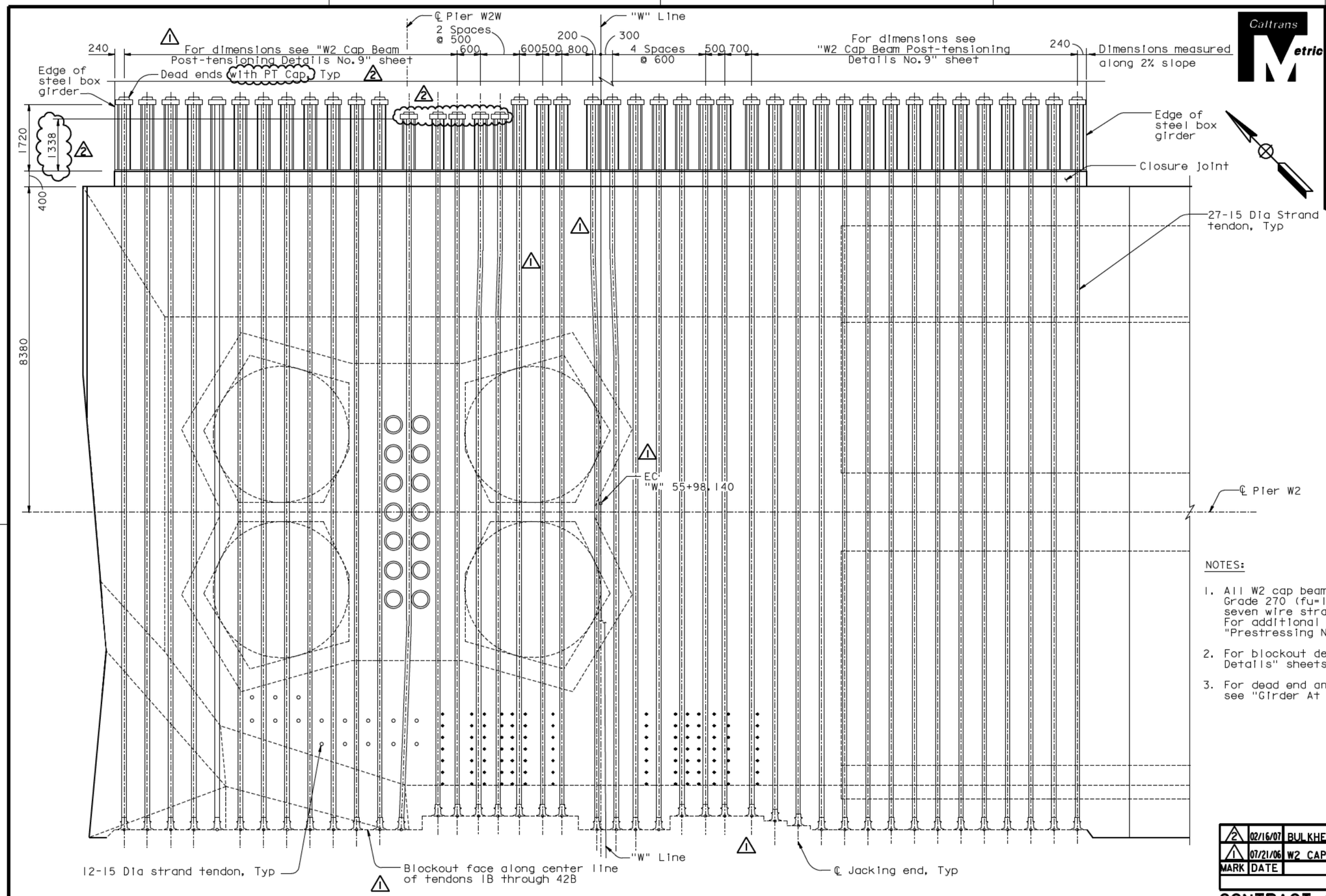

BOTTOM TENDON LAYOUT PLAN ("W" Line)

1:50

ALL DIMENSIONS ARE IN MILLIMETERS UNLESS OTHERWISE SHOWN

NOTES:

1. All W2 cap beam continuity tendons are ASTM A416 Grade 270 (fu=1860 MPa), low relaxation, 27-15 Dia seven wire strand PT, unless specified otherwise. For additional prestressing details, see "Prestressing Notes" sheet.
2. For blockout details, see "W2 Cap Beam Blockout Details" sheets.
3. For dead end anchor bearing steel grillage, see "Girder At Pier W2 No.4" sheet.

DIST.	COUNTY	ROUTE	KILOMETER POST TOTAL PROJECT	SHEET NO.	TOTAL SHEETS
04	SF	80	13.2/13.9	469R2	1204

Caltrans Metric

REGISTERED ENGINEER - CIVIL

12-6-04
PLANS APPROVAL DATE

REGISTERED PROFESSIONAL ENGINEER John Sun No. C 54648 Exp. 12/31/05 CIVIL STATE OF CALIFORNIA

The State of California or its officers or agents shall not be responsible for the accuracy or completeness of electronic copies of this plan sheet.

T.Y. LIN / MOFFATT & NICHOL
825 BATTERY STREET
SAN FRANCISCO, CA 94111

Caltrans now has a web site! To get to the web site, go to: http://www.dot.ca.gov

REGISTERED PROFESSIONAL ENGINEER James P. Duxbury No. C 64677 Exp. 06/30/07 CIVIL STATE OF CALIFORNIA

FOR REVISIONS ONLY

MARK	DATE	DESCRIPTIONS	BY	CH'D	CCO#
2	02/16/07	BULKHEAD AT GIRDER PIER W2	JD	AS	27
1	07/21/06	W2 CAP BEAM ISD	JD	NV	23

REVISIONS

CONTRACT CHANGE ORDER NO. ____
SHEET ____ OF ____

100 % PS&E

SAN FRANCISCO OAKLAND BAY BRIDGE
EAST SPAN SEISMIC SAFETY PROJECT
SELF-ANCHORED SUSPENSION BRIDGE
(SUPERSTRUCTURE & TOWER)

W2 CAP BEAM POST-TENSIONING DETAILS NO.8

R. Valizadeh/V. Toan/Y.L./W.L./F.C.
DESIGN OVERSIGHT
SIGN OFF DATE 02/16/07

	BY	CHECKED
DESIGN	J. Sun	M. Chen
DETAILS	J. Duxbury	M. Chen
QUANTITIES	S. Shi	D. Harrison

PREPARED FOR THE STATE OF CALIFORNIA DEPARTMENT OF TRANSPORTATION

R. Manzanarez
PROJECT ENGINEER

BRIDGE NO. 34-0006L/R
KILOMETER POST 13.2/13.9

CU 04
EA 0120F1

Rev. Date: 5-18-98

ORIGINAL SCALE IN MILLIMETERS FOR REDUCED PLANS 0 10 20 30 40 50 60 70 80 90 100

DISREGARD PRINTS BEARING EARLIER REVISION DATES

REVISION DATES (PRELIMINARY STAGE ONLY): 08/28/99 05/31/01 04/08/02 07/01/02 12/19/02

SHEET 052R2 OF

FILE -> I:\bb\04-012001\sas\contract plans and cco\cco\in progress\cco#27\aecpt08.dgn

USERNAME => visitor DATE PLOTTED => 15 MAR 2007 TIME PLOTTED => 16:07:35

DIST.	COUNTY	ROUTE	KILOMETER POST TOTAL PROJECT	SHEET NO.	TOTAL SHEETS
04	SF	80	13.2/13.9	472R2	1204

REGISTERED ENGINEER - CIVIL

12-6-04
PLANS APPROVAL DATE

REGISTERED PROFESSIONAL ENGINEER John Sun No. C 54648 Exp. 12/31/05 CIVIL STATE OF CALIFORNIA

The State of California or its officers or agents shall not be responsible for the accuracy or completeness of electronic copies of this plan sheet.

T.Y. LIN / MOFFATT & NICHOL
825 BATTERY STREET
SAN FRANCISCO, CA 94111

To get to the web site, go to: http://www.dot.ca.gov

Caltrans Metric

REGISTERED PROFESSIONAL ENGINEER James P. Duxbury No. C 64677 Exp. 06/30/07 CIVIL STATE OF CALIFORNIA

FOR REVISIONS ONLY

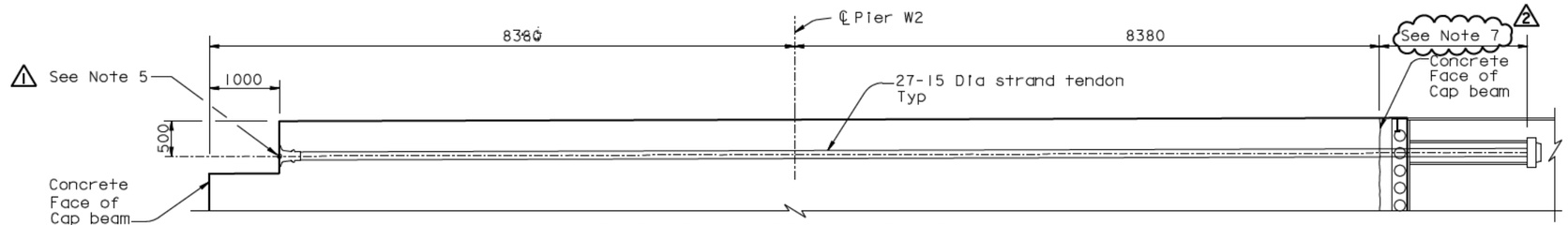

ELEVATION-TENDON TYPE 1

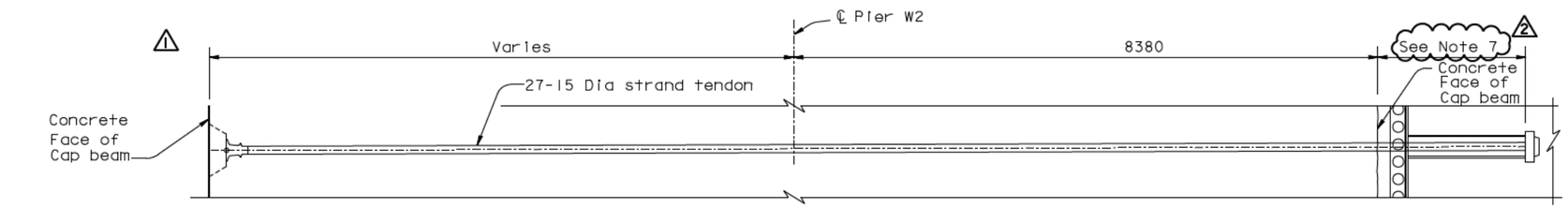

ELEVATION-TENDON TYPE 2

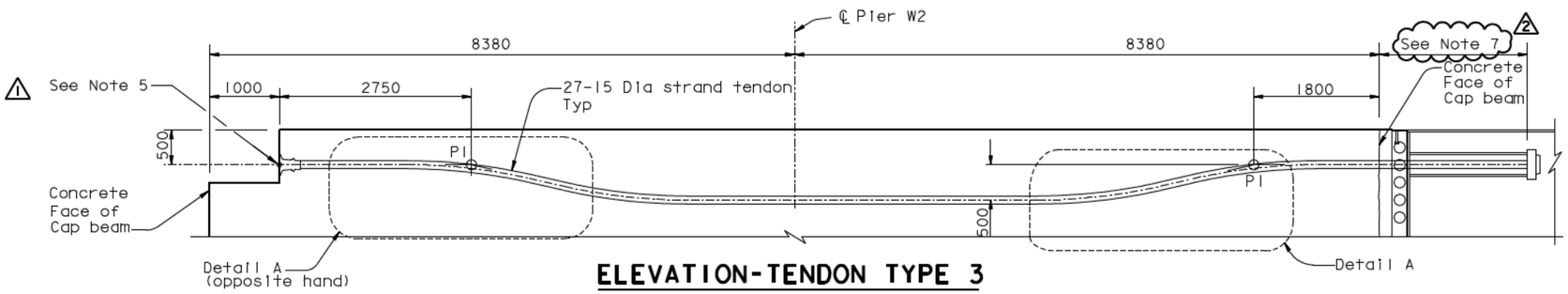

ELEVATION-TENDON TYPE 3

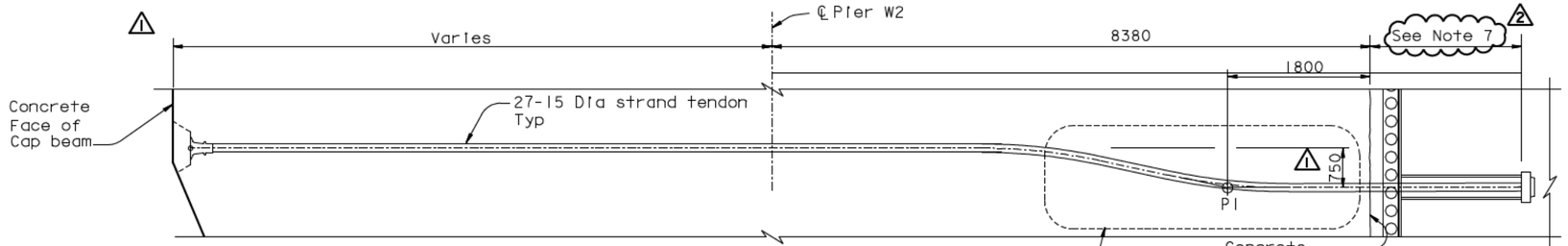

ELEVATION-TENDON TYPE 4

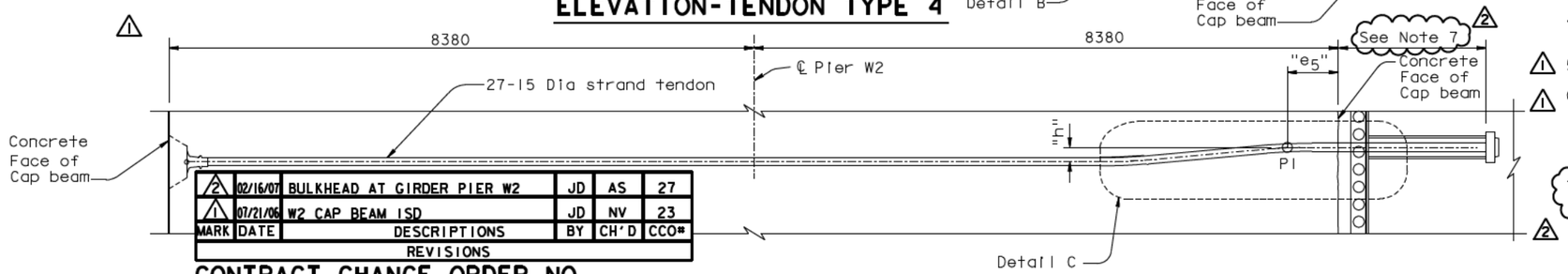

ELEVATION-TENDON TYPE 5

MARK	DATE	DESCRIPTIONS	BY	CH'D	CCO#
2	02/16/07	BULKHEAD AT GIRDER PIER W2	JD	AS	27
1	07/21/06	W2 CAP BEAM ISD	JD	NV	23

REVISIONS

CONTRACT CHANGE ORDER NO. ____
SHEET ____ OF ____

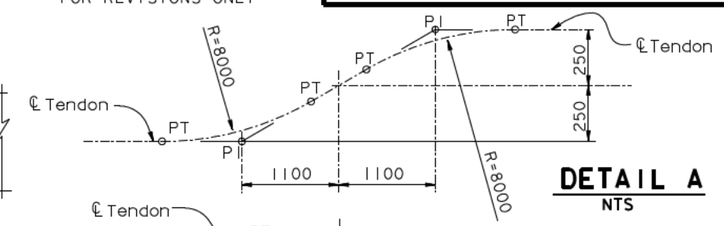

DETAIL A
NTS

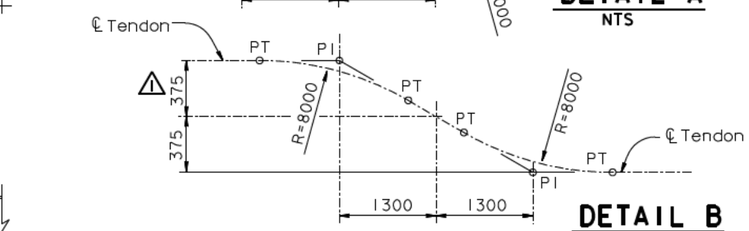

DETAIL B
NTS

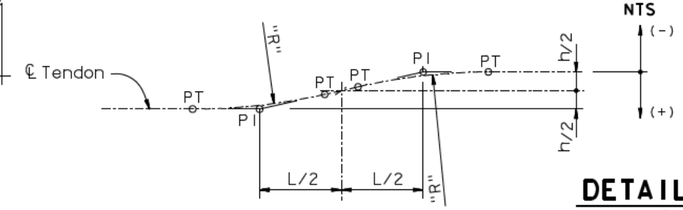

DETAIL C
NTS

NOTES:

1. For additional details, see "W2 Cap Beam Post-Tensioning Details No.5" through "W2 Cap Beam Post-Tensioning Details No.10" sheets.
2. For tendon type designation, see "W2 Cap Beam Post-Tensioning Details No.12" sheet.
3. For PT blockout dimensions, see "W2 Cap Beam Blockout Details" sheets.
4. For dimension "h","L","e5" and "R", see "W2 Cap Beam Post-Tensioning Details No.12" sheet.
5. Adjust vertical face to be normal to the axis of the tendon.
6. Jacking of continuity tendons shall not crush the ducts of the CBT transverse tendons. Where necessary, extra strong steel pipes (ASTM A53 Type S, Grade B, f_y =240 MPa) shall be provided together with necessary hardware connecting the steel pipes to galvanized corrugated steel duct.
7. For extents of post-tensioning into the Girder at Pier W2, see Top and Bottom tendon layout plans on "W2 Cap Beam Post-Tensioning Details No.5 thru No.8" sheets.

ALL DIMENSIONS ARE IN MILLIMETERS UNLESS OTHERWISE SHOWN

R. Valizadeh/V.Toan/Y.L./W.L./F.C.
DESIGN OVERSIGHT
SIGN OFF DATE 02/18/07

	BY	CHECKED
DESIGN	J. Sun	M. Chen
DETAILS	J. Duxbury	M. Chen
QUANTITIES	S. Shi	D. Harrison

PREPARED FOR THE STATE OF CALIFORNIA DEPARTMENT OF TRANSPORTATION

CHECKED R. Manzanarez
PROJECT ENGINEER

BRIDGE NO. 34-0006L/R
KILOMETER POST 13.2/13.9

SAN FRANCISCO OAKLAND BAY BRIDGE
EAST SPAN SEISMIC SAFETY PROJECT
SELF-ANCHORED SUSPENSION BRIDGE
(SUPERSTRUCTURE & TOWER)

W2 CAP BEAM POST-TENSIONING DETAILS NO. 11

Rev. Date: 5-18-98

ORIGINAL SCALE IN MILLIMETERS FOR REDUCED PLANS 0 10 20 30 40 50 60 70 80 90 100

CU 04
EA 0120F1

DISREGARD PRINTS BEARING EARLIER REVISION DATES

REVISION DATES (PRELIMINARY STAGE ONLY) 05/28/99 05/31/01 04/08/02 07/01/02 12/19/02

SHEET 055R2 OF

FILE -> I:\bb\04-012001\sas\contract plans and cco\cco\in progress\cco#27\decptll.dgn

USERNAME => visitor DATE PLOTTED => 15 MAR 2007 TIME PLOTTED => 16:08:42

100 % PS&E

Caltrans now has a web site! To get to the web site, go to: http://www.dot.ca.gov

DIST.	COUNTY	ROUTE	KILOMETER POST TOTAL PROJECT	SHEET No.	TOTAL SHEETS
04	SF	80	13.2/13.9	497S25R2	1204

REGISTERED ENGINEER - CIVIL
12-6-04
PLANS APPROVAL DATE

REGISTERED PROFESSIONAL ENGINEER John Sun No. C 54648 Exp. 12/31/05 CIVIL STATE OF CALIFORNIA

The State of California or its officers or agents shall not be responsible for the accuracy or completeness of electronic copies of this plan sheet.

T.Y. LIN / MOFFATT & NICHOL
825 BATTERY STREET
SAN FRANCISCO, CA 94111

Caltrans Metric

REGISTERED PROFESSIONAL ENGINEER James P. Duxbury No. C 64677 Exp. 06/30/07 CIVIL STATE OF CALIFORNIA

FOR REVISIONS ONLY

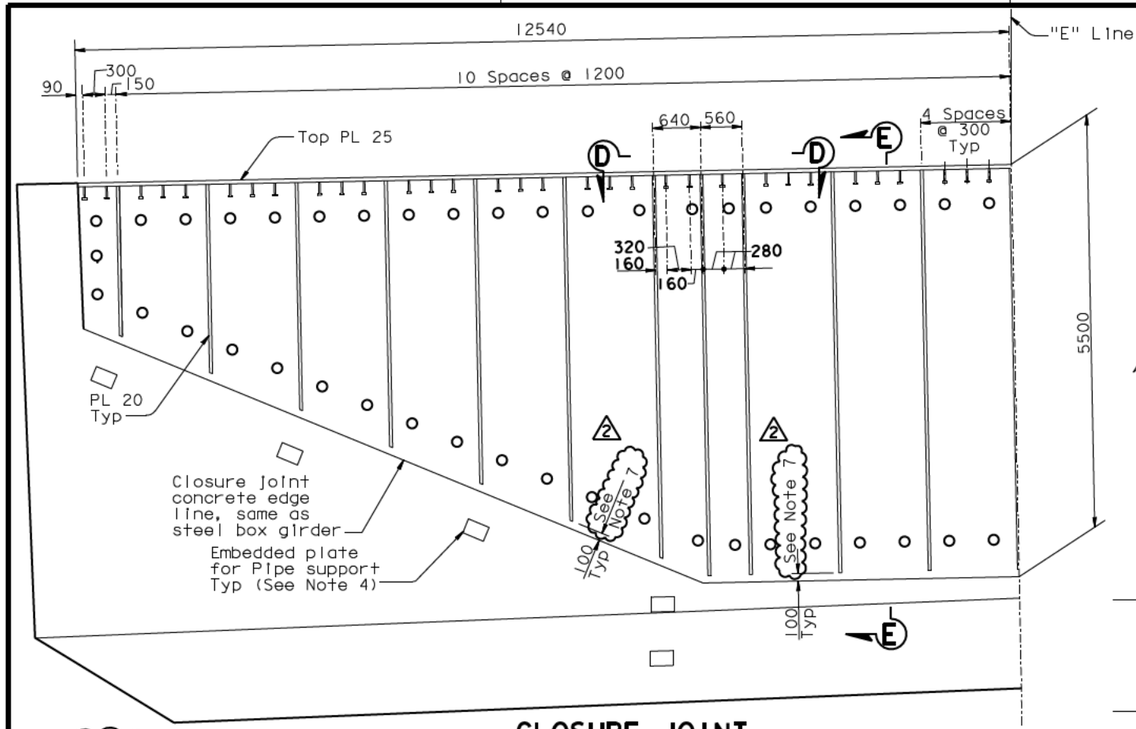

CLOSURE JOINT

(Closure joint reinforcement not shown for clarity)

1:40

NOTES:

6. For extents of post-tensioning into the Girder at Pier W2, see Top and Bottom Tendon layout on "W2 Cap Beam Post-tensioning Details No. 5 thru No. 8" sheets.
7. For Westbound continuity tendons 28B, 29A and 29B and for Eastbound continuity tendons 29A and 29B, the Contractor may terminate the PL20 vertical stiffener 125 mm above the bottom tendons and below the top tendons.
8. At the Contractor's option, hairpin dimension may be reduced to 1200 min.
9. At the Contractor's option, ultimate splice couplers may be used on #19 hairpins.
10. Bundled hairpins shall be placed along the entire box girder interface perimeter.

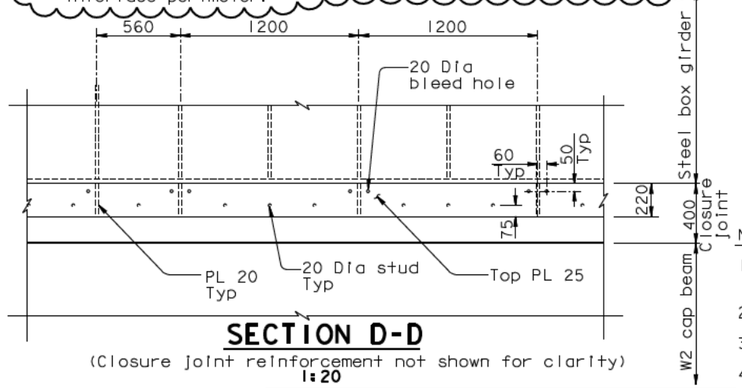

SECTION D-D

(Closure joint reinforcement not shown for clarity)

1:20

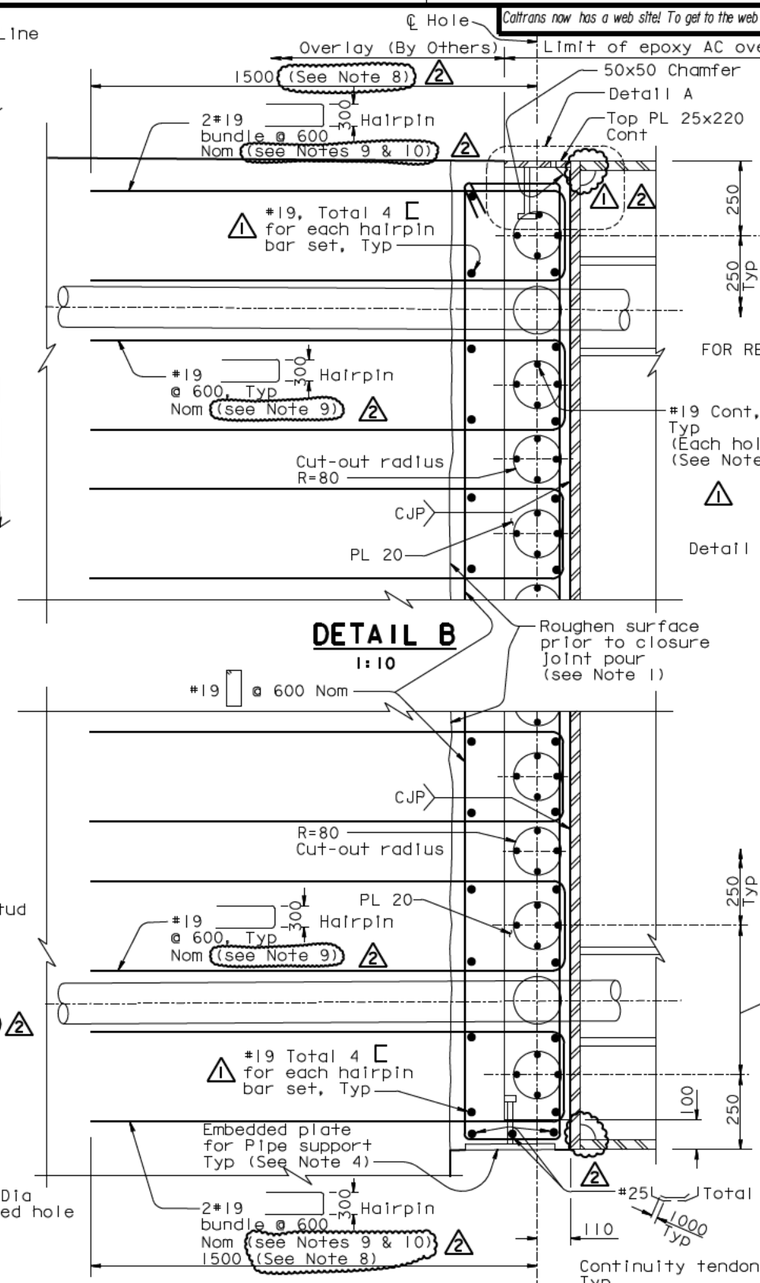

DETAIL B

1:10

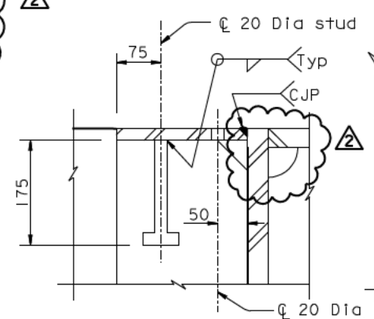

DETAIL A

1:5

DETAIL C

1:10

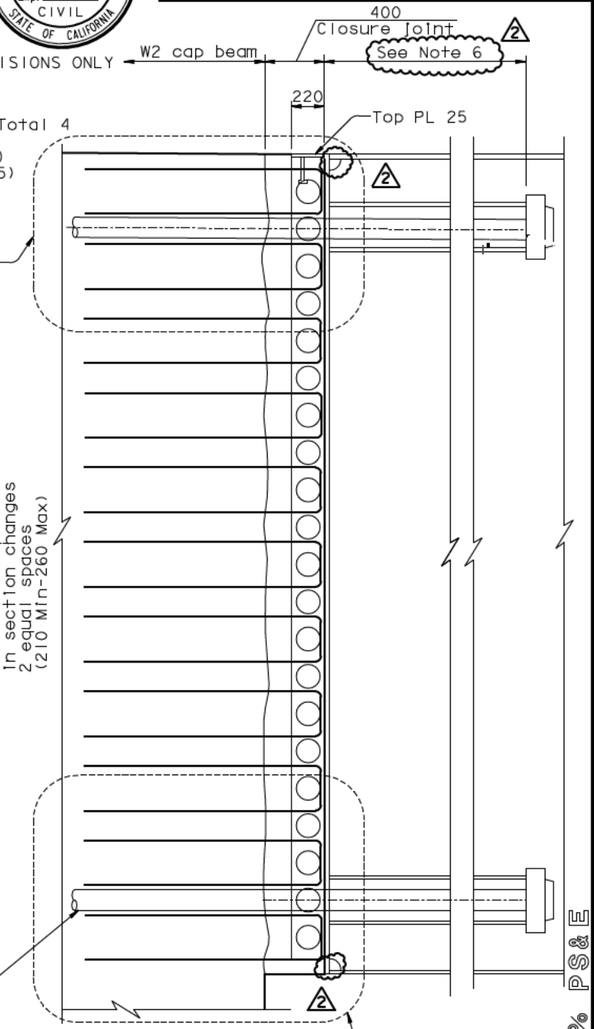

SECTION E-E

1:20

NOTES:

1. Roughen the existing W2 Cap Beam concrete surface to a minimum of 5 mm amplitude prior to pouring the closure joint.
2. Reinforcement spacing shall be adjusted to avoid PT ducts if required.
3. All plate shall be ASTM A709M HPS 485W, unless specified otherwise.
4. For pipe support locations and details, see "Road Plans".
5. At the Contractor's option, 2-#29 bundled bars may be used.

ALL DIMENSIONS ARE IN MILLIMETERS UNLESS OTHERWISE SHOWN

MARK	DATE	DESCRIPTIONS	BY	CH'D	CCO#
2	02/16/07	BULKHEAD AT GIRDER PIER W2	JD	AS	27
1	01/31/07	WEST DEVIATION SADDLE GEOMETRY	JD	AS	15
0	07/21/06	GENERAL REVISIONS	JD	AS	23

REVISIONS

CONTRACT CHANGE ORDER NO. ____
SHEET ___ OF ___

R. Vallzadeh/V. Toan/Y.L./W.L./F.C.
DESIGN OVERSIGHT
SIGN OFF DATE 02/16/07

Rev. Date: 5-18-98

DESIGN	BY J. Sun	CHECKED M. Chen	
DETAILS	BY J. Duxbury	CHECKED M. Chen	
QUANTITIES	BY S. Shi	CHECKED D. Harrison	

PREPARED FOR THE STATE OF CALIFORNIA DEPARTMENT OF TRANSPORTATION

R. Manzanarez
PROJECT ENGINEER

BRIDGE NO. 34-0006L/R
KILOMETER POST 13.2/13.9

CU 04
EA 0120F1

ORIGINAL SCALE IN MILLIMETERS FOR REDUCED PLANS 0 10 20 30 40 50 60 70 80 90 100

DISREGARD PRINTS BEARING EARLIER REVISION DATES 07/21/06

REVISION DATES (PRELIMINARY STAGE ONLY)

SHEET 080S25R2 OF

SAN FRANCISCO OAKLAND BAY BRIDGE
EAST SPAN SEISMIC SAFETY PROJECT
SELF-ANCHORED SUSPENSION BRIDGE
(SUPERSTRUCTURE & TOWER)

W2 CAP BEAM REINFORCEMENT DETAILS NO. 49

100 % PS&E

DATE PLOTTED => 10 MAY 2007 TIME PLOTTED => 14:59:37

USERNAME => ptom

FILE -> I:\bb\04-012001\sas\contract plans and cco\cco\in progress\cco#27\sup cco#27\aecap48r-s.dgn

DIST.	COUNTY	ROUTE	KILOMETER POST TOTAL PROJECT	SHEET NO.	TOTAL SHEETS
04	SF	80	13.2/13.9	619R1	1204

REGISTERED ENGINEER - CIVIL

12-6-04
PLANS APPROVAL DATE

The State of California or its officers or agents shall not be responsible for the accuracy or completeness of electronic copies of this plan sheet.

REGISTERED PROFESSIONAL ENGINEER Marwan N. Nader No. C 054426 Exp. 12/31/07 CIVIL STATE OF CALIFORNIA

T.Y. LIN / MOFFATT & NICHOL
825 BATTERY STREET
SAN FRANCISCO, CA 94111

Caltrans now has a web site! To get to the web site, go to: http://www.dot.ca.gov

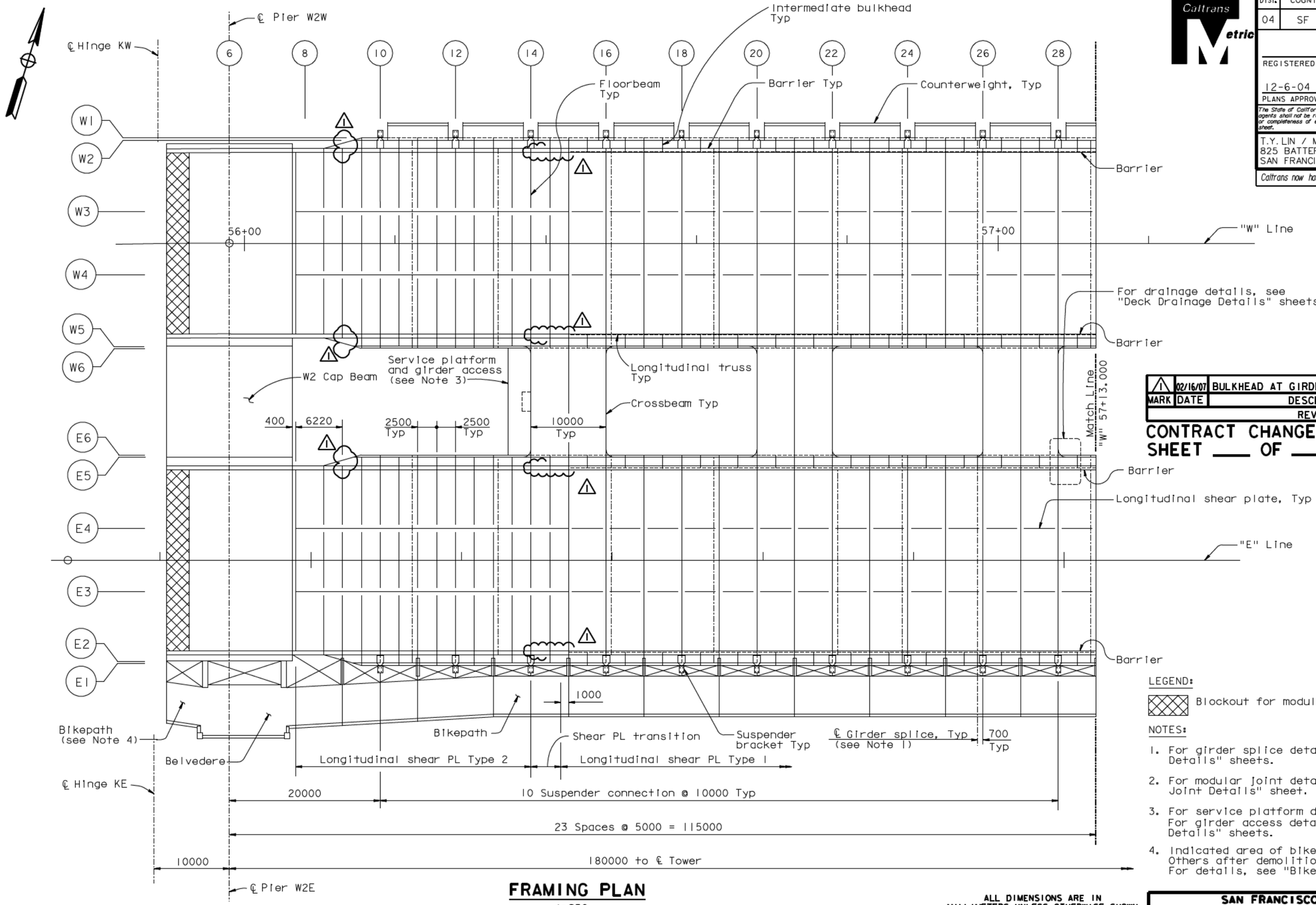

FRAMING PLAN

1:250

MARK	DATE	DESCRIPTIONS	BY	CH'D	CCO#
1	02/16/07	BULKHEAD AT GIRDER PIER W2	MN	AS	27

REVISIONS

CONTRACT CHANGE ORDER NO. ____
SHEET ____ OF ____

LEGEND:

Blockout for modular joint

NOTES:

1. For girder splice details, see "Typical Girder Details" sheets.
2. For modular joint details, see "Hinge K Expansion Joint Details" sheet.
3. For service platform details, see "Road Plans". For girder access details, see "Girder Access Details" sheets.
4. Indicated area of bikepath to be installed by Others after demolition of existing structure. For details, see "Bikepath Layout" sheets.

ALL DIMENSIONS ARE IN MILLIMETERS UNLESS OTHERWISE SHOWN

100 % PS&E

USERNAME => alishansky DATE PLOTTED => 16 MAR 2007 TIME PLOTTED => 07:41:45

R. Valizadeh/V. Toan/Y.L./W.L./F.C.
DESIGN OVERSIGHT
Roger Valizadeh / Vong Toan / Y. Liu
SIGN OFF DATE 02/16/07

	BY	CHECKED
DESIGN	M. Nader	T. McMeans
DETAILS	G. Baker	T. McMeans
QUANTITIES	G. Baker	M. Roberts

PREPARED FOR THE STATE OF CALIFORNIA DEPARTMENT OF TRANSPORTATION

R. Manzanarez
PROJECT ENGINEER

BRIDGE NO. 34-0006L/R
KILOMETER POST 13.2/13.9

SAN FRANCISCO OAKLAND BAY BRIDGE
EAST SPAN SEISMIC SAFETY PROJECT
SELF-ANCHORED SUSPENSION BRIDGE
(SUPERSTRUCTURE & TOWER)

GIRDER FRAMING PLAN NO. 1

Rev. Date: 5-18-98

ORIGINAL SCALE IN MILLIMETERS FOR REDUCED PLANS 0 10 20 30 40 50 60 70 80 90 100

CU 04
EA 0120F1

DISREGARD PRINTS BEARING EARLIER REVISION DATES

REVISION DATES (PRELIMINARY STAGE ONLY) 01/15/99 05/15/99 08/02/99 05/31/01 04/08/02 07/01/02 12/19/02

SHEET 202R1 OF

FILE -> I:\bb\04-012001\sas\contract plans and cco\cco\in progress\cco#27\aggir01.dgn

DIST.	COUNTY	ROUTE	KILOMETER POST TOTAL PROJECT	SHEET NO.	TOTAL SHEETS
04	SF	80	13.2/13.9	646R1	1204

Caltrans Metric

George Baker
REGISTERED ENGINEER - CIVIL

12-6-04
PLANS APPROVAL DATE

REGISTERED PROFESSIONAL ENGINEER George S. Baker No. C57112 Exp. 12/31/05 CIVIL STATE OF CALIFORNIA

The State of California or its officers or agents shall not be responsible for the accuracy or completeness of electronic copies of this plan sheet.

T.Y. LIN / MOFFATT & NICHOL
825 BATTERY STREET
SAN FRANCISCO, CA 94111

Caltrans now has a web site! To get to the web site, go to: http://www.dot.ca.gov

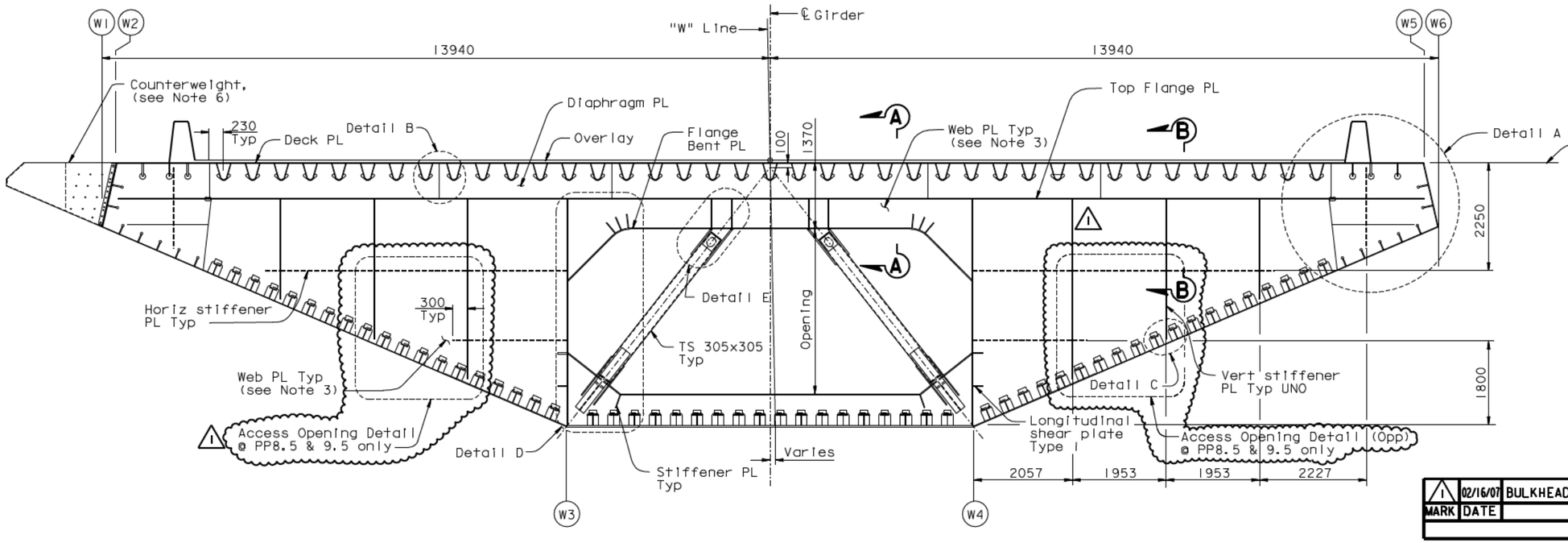

"W" LINE

TYPICAL FLOORBEAM SECTION (See Note 1)

1:50

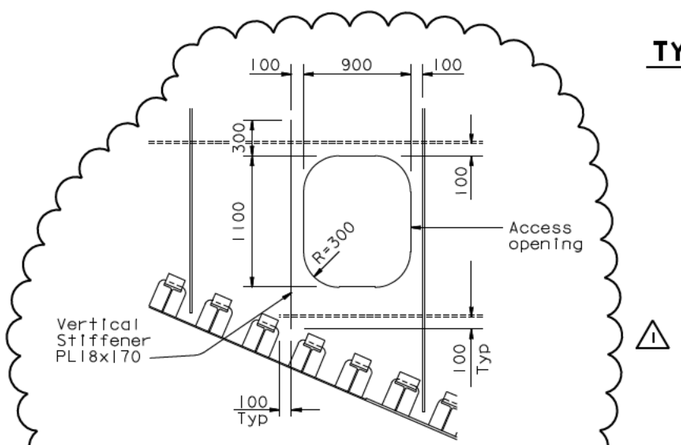

ACCESS OPENING DETAIL

(PP9.5 shown, PP8.5 similar)

NOTES:

1. Typical floorbeam is located at Panel Points 9 through 115 and intermediate Panel Points 8.5 to 9.5.
2. For floorbeam at intermediate Panel Points 10.5, 11.5, 12.5, 13.5, 111.5, 112.5, 113.5, 114.5, 115.2 and 115.5, see "Typical Floorbeam Details No.8" sheet.
3. For extents and thickness of floorbeam web, see "Typical Floorbeam Details No.2" sheet.
4. All dimensions are taken with respect to a reference line tangent to top deck plate.
5. For Sections A-A and B-B and Details B and C, see "Typical Floorbeam Details No.4" sheet.
6. For counterweight details, see "Typical Girder Details No.17" sheet.
7. For "Typical Floorbeam Details" sheets all bolts shall be detailed according to the bolt dimension table. See "Typical Girder Details No.1" sheet. All bolts are HS, unless noted otherwise.
8. For "Typical Floorbeam Details" sheets unless noted otherwise all fillet welds shall be 6 mm for plate sizes not greater than 20 mm. For plates greater than 20 mm fillet welds shall be 8 mm unless noted otherwise.
9. For Detail A, see "Typical Floorbeam Details No.3" sheet.
10. For Details D and E, see "Typical Floorbeam Details No.5" sheet.

Daniel J. Turner
REGISTERED PROFESSIONAL ENGINEER Daniel J. Turner No. C 65033 Exp. 06/30/07 CIVIL STATE OF CALIFORNIA

FOR REVISIONS ONLY

MARK	DATE	DESCRIPTIONS	BY	CH'D	CCO#
1	02/16/07	BULKHEAD AT GIRDER PIER W2	AS	DT	27

REVISIONS

CONTRACT CHANGE ORDER NO. ____
SHEET ___ OF ___

ALL DIMENSIONS ARE IN MILLIMETERS UNLESS OTHERWISE SHOWN

SAN FRANCISCO OAKLAND BAY BRIDGE
EAST SPAN SEISMIC SAFETY PROJECT
SELF-ANCHORED SUSPENSION BRIDGE
(SUPERSTRUCTURE & TOWER)

TYPICAL FLOORBEAM DETAILS NO. 1

R. Valizadeh/V. Toan/Y.L./W.L./F.C.
DESIGN OVERSIGHT
Roger Valizadeh / Vona Toan / Y. Lin
SIGN OFF DATE 02/16/07

	BY	CHECKED
DESIGN	G. Baker	P. Ritchie
DETAILS	S. Camo	T. McMeans
QUANTITIES	C. Mauch	M. Roberts

PREPARED FOR THE STATE OF CALIFORNIA DEPARTMENT OF TRANSPORTATION

R. Manzanarez
PROJECT ENGINEER

BRIDGE NO. 34-0006L/R
KILOMETER POST 13.2/13.9

Rev. Date: 5-18-98

ORIGINAL SCALE IN MILLIMETERS FOR REDUCED PLANS 0 10 20 30 40 50 60 70 80 90 100

CU 04
EA 0120F1

DISREGARD PRINTS BEARING EARLIER REVISION DATES

REVISION DATES (PRELIMINARY STAGE ONLY) 01/15/99 05/15/99 08/02/99 05/31/01 04/08/02 07/01/02 12/19/02

SHEET 229R1 OF

FILE -> I:\bb\04-0120F1\sas\contract plans and cco\cco\in progress\cco#27\agftb01.dgn

100 % PS&E

USERNAME => vignatovsk DATE PLOTTED => 19 MAR 2007 TIME PLOTTED => 13:49:44

Caltrans now has a web site! To get to the web site, go to: http://www.dot.ca.gov

Caltrans Metric

DIST.	COUNTY	ROUTE	KILOMETER POST TOTAL PROJECT	SHEET NO.	TOTAL SHEETS
04	SF	80	13.2/13.9	665R1	1204

George Baker
REGISTERED ENGINEER - CIVIL
12-6-04
PLANS APPROVAL DATE

REGISTERED PROFESSIONAL ENGINEER George S. Baker No. C57112 Exp. 12/31/05 CIVIL STATE OF CALIFORNIA

The State of California or its officers or agents shall not be responsible for the accuracy or completeness of electronic copies of this plan sheet.

T.Y. LIN / MOFFATT & NICHOL
825 BATTERY STREET
SAN FRANCISCO, CA 94111

REGISTERED PROFESSIONAL ENGINEER Daniel J. Turner No. C 65033 Exp. 06/30/07 CIVIL STATE OF CALIFORNIA

FOR REVISIONS ONLY

MARK	DATE	DESCRIPTIONS	BY	CH'D	CCO#
1	02/16/07	BULKHEAD AT GIRDER PIER W2	GB	DT	27

REVISIONS

CONTRACT CHANGE ORDER NO. ____
SHEET ___ OF ___

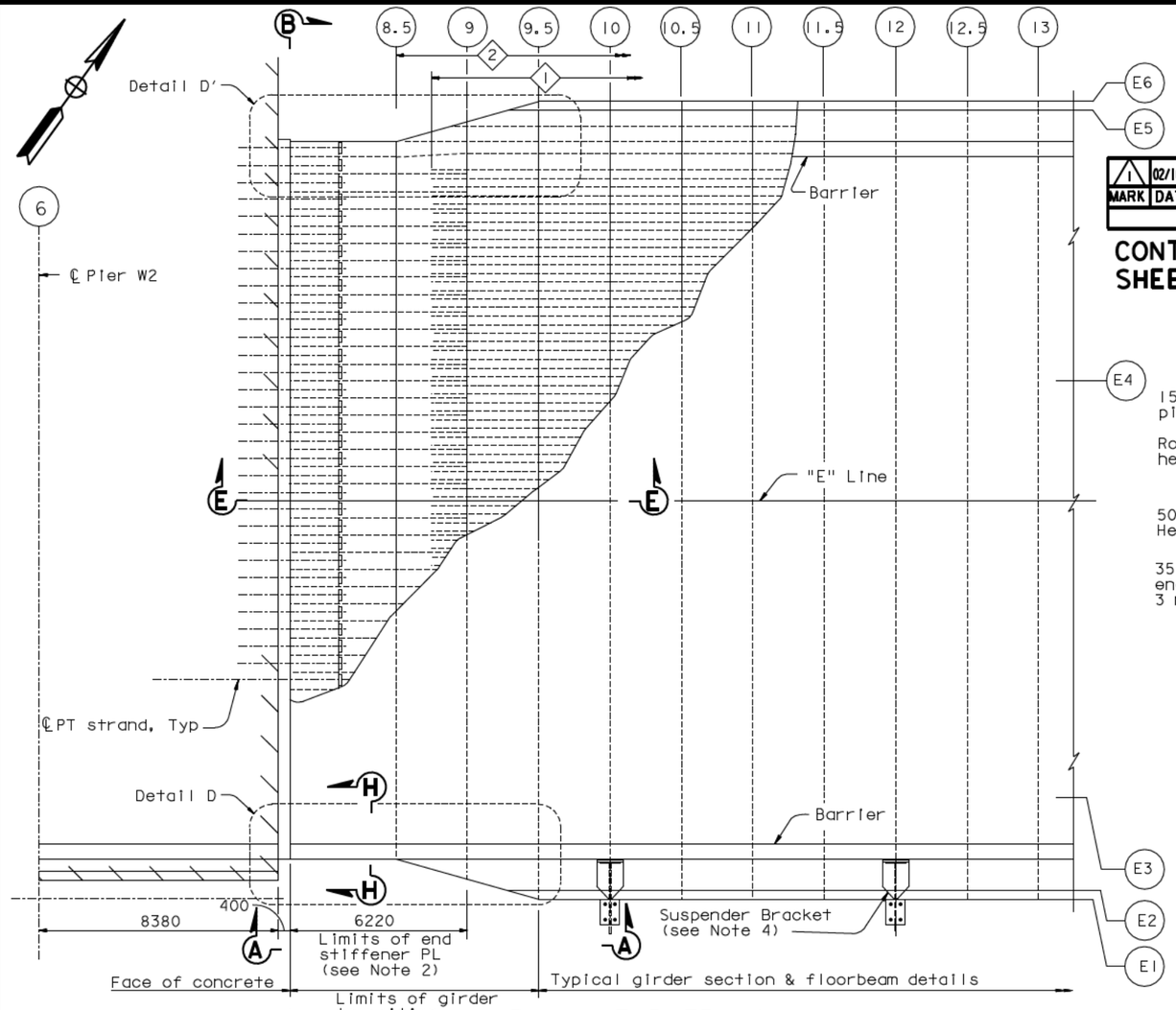

PLAN AT PIER W2
1:100

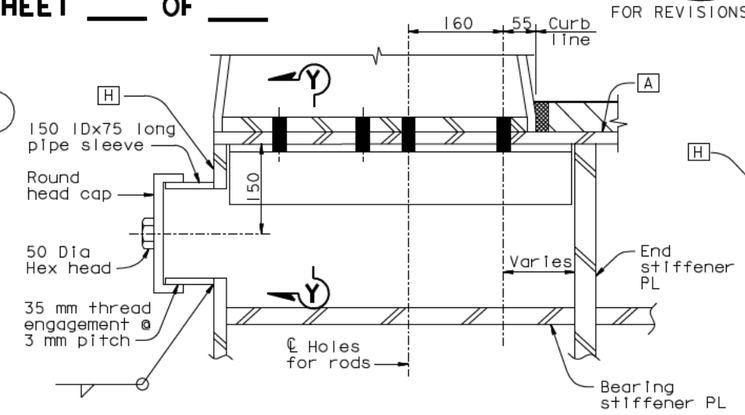

TYPE D

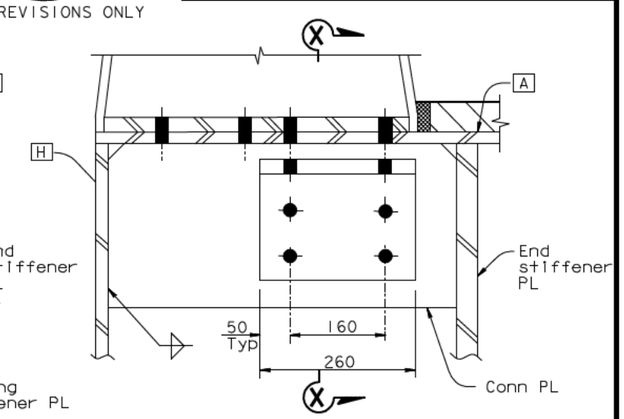

TYPE E

BARRIER CONNECTION DETAILS (See Note 3)
1:5

LEGEND:

- [A] Girder face designation A
- -------- Stiffener Type 2,3,9,10,11 or other stiffener
- ——— Stiffener Type 1 leg
- ◇ Stiffener Type 1 designation

NOTES:

1. For layout of girder transition, see "Girder At Pier W2 No.5" sheet. For floorbeam at PP8.5 and PP9, see "Girder At Pier W2 No.6" sheet.
2. For limits of end stiffener plate and layout of transition to typical girder stiffeners, see "Girder At Pier W2 No.3 and 4" sheets.
3. For location of barrier connection Types D and E, see "Girder At Pier W2 No.3" sheet. For connection details not shown, see "Typical Girder Details No.14" sheet.
4. For suspender bracket, see "Suspender Bracket Details No.1, 2 and 3" sheets.
5. For "Girder At Pier W2" sheets all bolts shall be detailed according to the bolt dimension table, see "Typical Girder Details No.1" sheet. All bolts are HS unless noted otherwise.
6. For "Girder At Pier W2" sheets unless noted otherwise all fillet welds shall be 6 mm for plate sizes not greater that 20 mm. For plates greater than 20 mm fillet welds shall be 8 mm unless noted otherwise.
7. For end-view Section B-B, see "Girder At Pier W2 No.2" sheet.
8. For Section H-H and Details D and D', see "Girder At Pier W2 No.3" sheet.
9. For Section E-E, see "Girder At Pier W2 No.4" sheet.

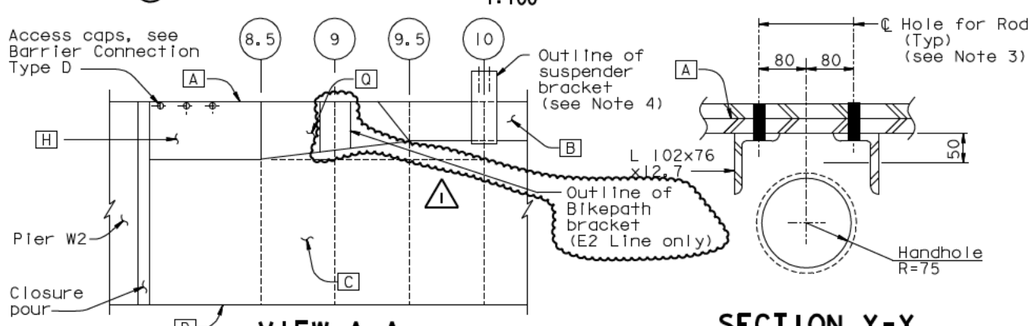

VIEW A-A
1:100

SECTION Y-Y
1:5

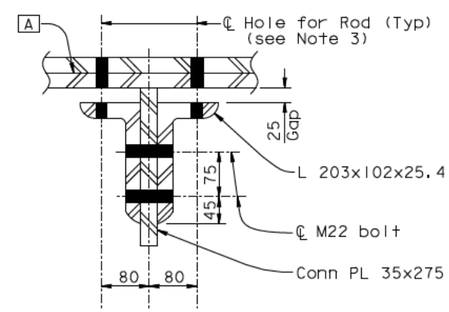

SECTION X-X
1:5

ALL DIMENSIONS ARE IN MILLIMETERS UNLESS OTHERWISE SHOWN

R. Vallizadeh/V. Toan/Y.L./W.L./F.C.
DESIGN OVERSIGHT
SIGN OFF DATE 02/16/07

DESIGN	BY G. Baker	CHECKED P. Ritchie	
DETAILS	BY M. Gulyas	CHECKED T. McMeans	
QUANTITIES	BY C. Mauch	CHECKED M. Roberts	

PREPARED FOR THE STATE OF CALIFORNIA DEPARTMENT OF TRANSPORTATION

R. Manzanarez
PROJECT ENGINEER

BRIDGE NO. 34-0006L/R
KILOMETER POST 13.2/13.9

SAN FRANCISCO OAKLAND BAY BRIDGE
EAST SPAN SEISMIC SAFETY PROJECT
SELF-ANCHORED SUSPENSION BRIDGE
(SUPERSTRUCTURE & TOWER)

GIRDER AT PIER W2 NO. 1

Rev. Date: 5-18-98

ORIGINAL SCALE IN MILLIMETERS FOR REDUCED PLANS 0 10 20 30 40 50 60 70 80 90 100

CU 04
EA 0120F1

DISREGARD PRINTS BEARING EARLIER REVISION DATES

REVISION DATES (PRELIMINARY STAGE ONLY) 08/28/99 05/31/01 04/08/02 07/01/02 12/19/02

SHEET 248R1 OF

FILE -> I:\bb\04-012001\sas\contract plans and cco\cco\In progress\cco#27\aggdd01.dgn

100 % PS&E

USERNAME => altshansk DATE PLOTTED => 16 MAR 2007 TIME PLOTTED => 07:31:54

DIST.	COUNTY	ROUTE	KILOMETER POST TOTAL PROJECT	SHEET NO.	TOTAL SHEETS
04	SF	80	13.2/13.9	666R1	1204

George Baker
REGISTERED ENGINEER - CIVIL
12-6-04
PLANS APPROVAL DATE

REGISTERED PROFESSIONAL ENGINEER George S. Baker No. C57112 Exp. 12/31/05 CIVIL STATE OF CALIFORNIA

The State of California or its officers or agents shall not be responsible for the accuracy or completeness of electronic copies of this plan sheet.

Daniel J. Turner

REGISTERED PROFESSIONAL ENGINEER Daniel J. Turner No. C 65033 Exp. 06/30/07 CIVIL STATE OF CALIFORNIA

FOR REVISIONS ONLY

T.Y. LIN / MOFFATT & NICHOL
825 BATTERY STREET
SAN FRANCISCO, CA 94111

Caltrans now has a web site! To get to the web site, go to: http://www.dot.ca.gov

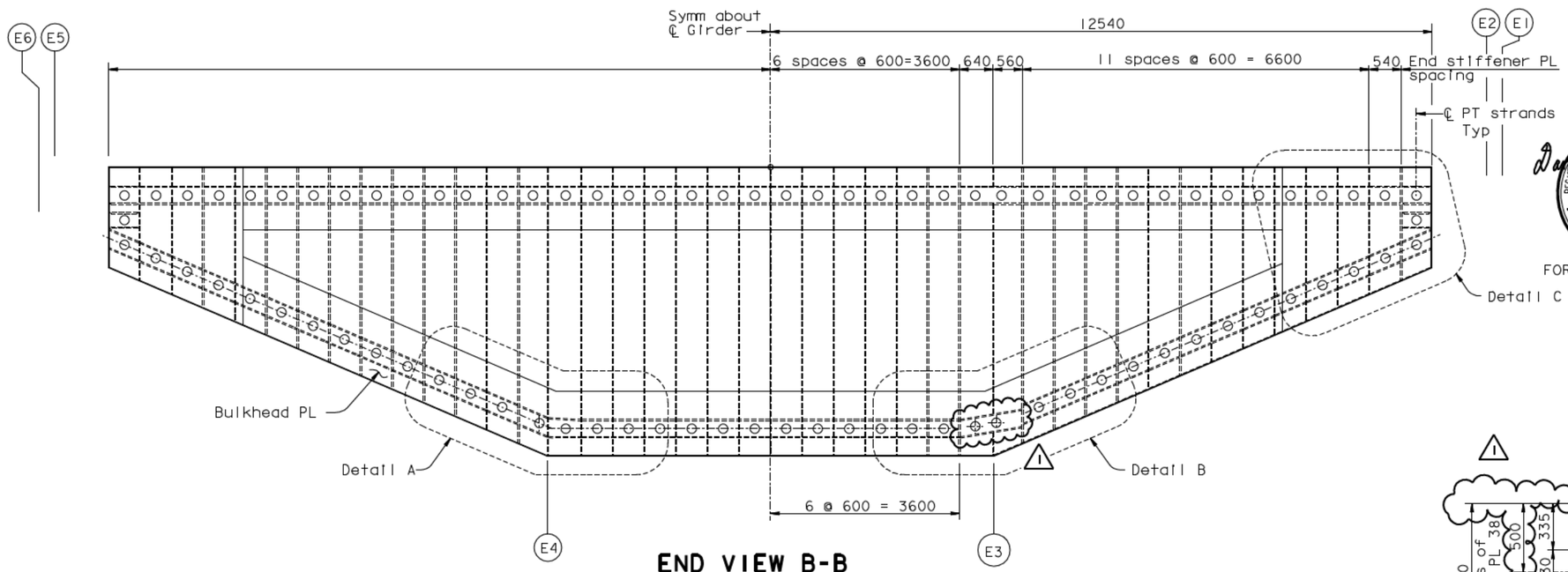

END VIEW B-B
1:50

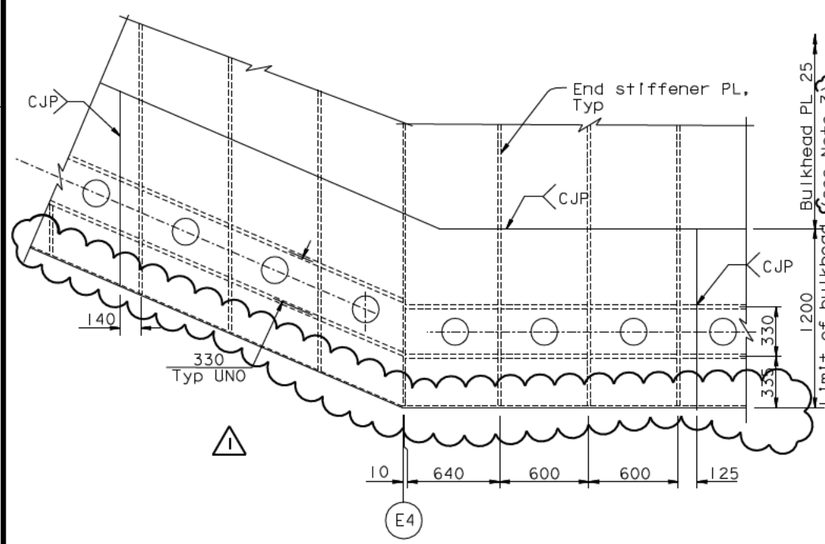

DETAIL A
1:20

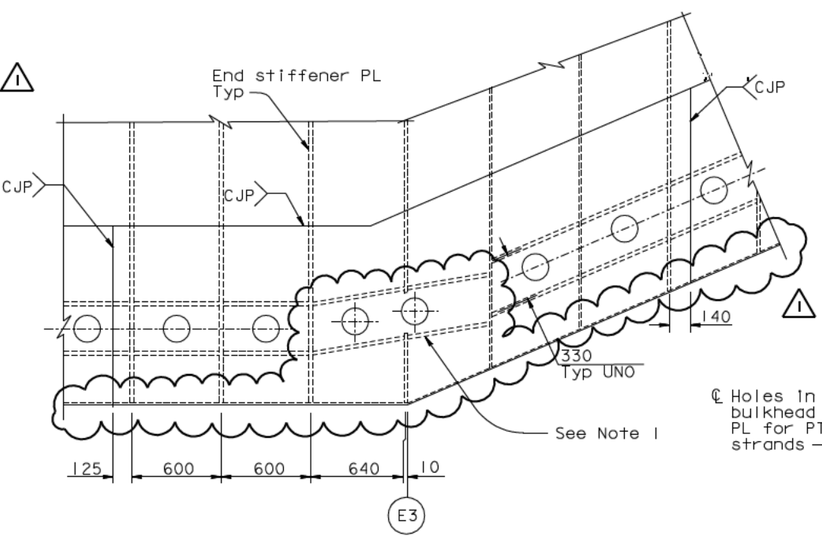

DETAIL B
1:20

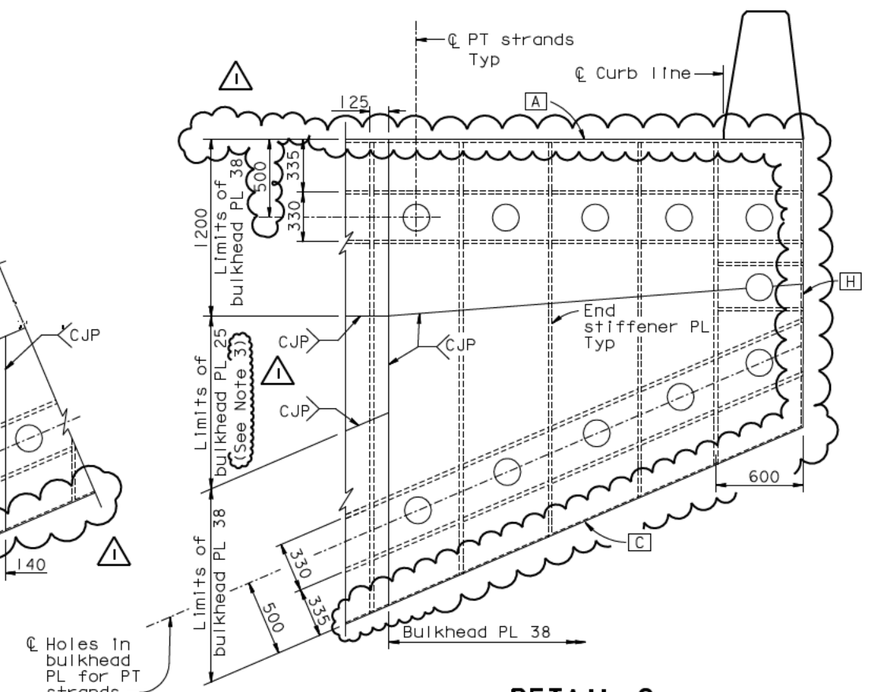

DETAIL C
1:20

NOTES:

1. Top and bottom strands above the E3 and W3 working points shall be placed in openings. For opening details, see Detail E on "Girder At Pier W2 No. 4" sheet.
2. For locations of PT strands, see "W2 Cap Beam Post-Tensioning Details" sheets.
3. At the Contractor's option, PL 38 may be used subject to review and approval of the Engineer.

MARK	DATE	DESCRIPTIONS	BY	CH'D	CCO#
1	02/16/07	BULKHEAD AT GIRDER PIER W2	AS	DT	27

REVISIONS

CONTRACT CHANGE ORDER NO. ____
SHEET ___ OF ___

ALL DIMENSIONS ARE IN MILLIMETERS UNLESS OTHERWISE SHOWN

SAN FRANCISCO OAKLAND BAY BRIDGE
EAST SPAN SEISMIC SAFETY PROJECT
SELF-ANCHORED SUSPENSION BRIDGE
(SUPERSTRUCTURE & TOWER)

GIRDER AT PIER W2 NO. 2

R. Vallzadeh/V. Toan/Y.L./W.L./F.C.
DESIGN OVERSIGHT
Roya Valizadeh / Vong Toan / Y. Liu
SIGN OFF DATE 02/16/07

	BY	CHECKED
DESIGN	G. Baker	P. Ritchie
DETAILS	S. Camo	T. McMeans
QUANTITIES	S. Mauch	M. Roberts

PREPARED FOR THE STATE OF CALIFORNIA DEPARTMENT OF TRANSPORTATION

R. Manzanarez
PROJECT ENGINEER

BRIDGE NO. 34-0006L/R
KILOMETER POST 13.2/13.9

Rev. Date: 5-18-98

ORIGINAL SCALE IN MILLIMETERS FOR REDUCED PLANS 0 10 20 30 40 50 60 70 80 90 100

CU 04
EA 0120F1

DISREGARD PRINTS BEARING EARLIER REVISION DATES

REVISION DATES (PRELIMINARY STAGE ONLY) 01/15/99 05/15/99 05/31/01 04/08/02 07/01/02 12/19/02

SHEET 249R1 OF

FILE -> I:\bb\04-012001\sas\contract plans and cco\cco\In progress\cco#27\aggdd02.dgn

100 % PS&E

USERNAME => vignatovsky DATE PLOTTED => 19 MAR 2007 TIME PLOTTED => 15:21:28

DIST.	COUNTY	ROUTE	KILOMETER POST TOTAL PROJECT	SHEET NO.	TOTAL SHEETS
04	SF	80	13.2/13.9	667R1	1204

George Baker
REGISTERED ENGINEER - CIVIL
12-6-04
PLANS APPROVAL DATE

REGISTERED PROFESSIONAL ENGINEER George S. Baker No. C57112 Exp. 12/31/05 CIVIL STATE OF CALIFORNIA

The State of California or its officers or agents shall not be responsible for the accuracy or completeness of electronic copies of this plan sheet.

T.Y. LIN / MOFFATT & NICHOL
825 BATTERY STREET
SAN FRANCISCO, CA 94111

Caltrans now has a web site! To get to the web site, go to: http://www.dot.ca.gov

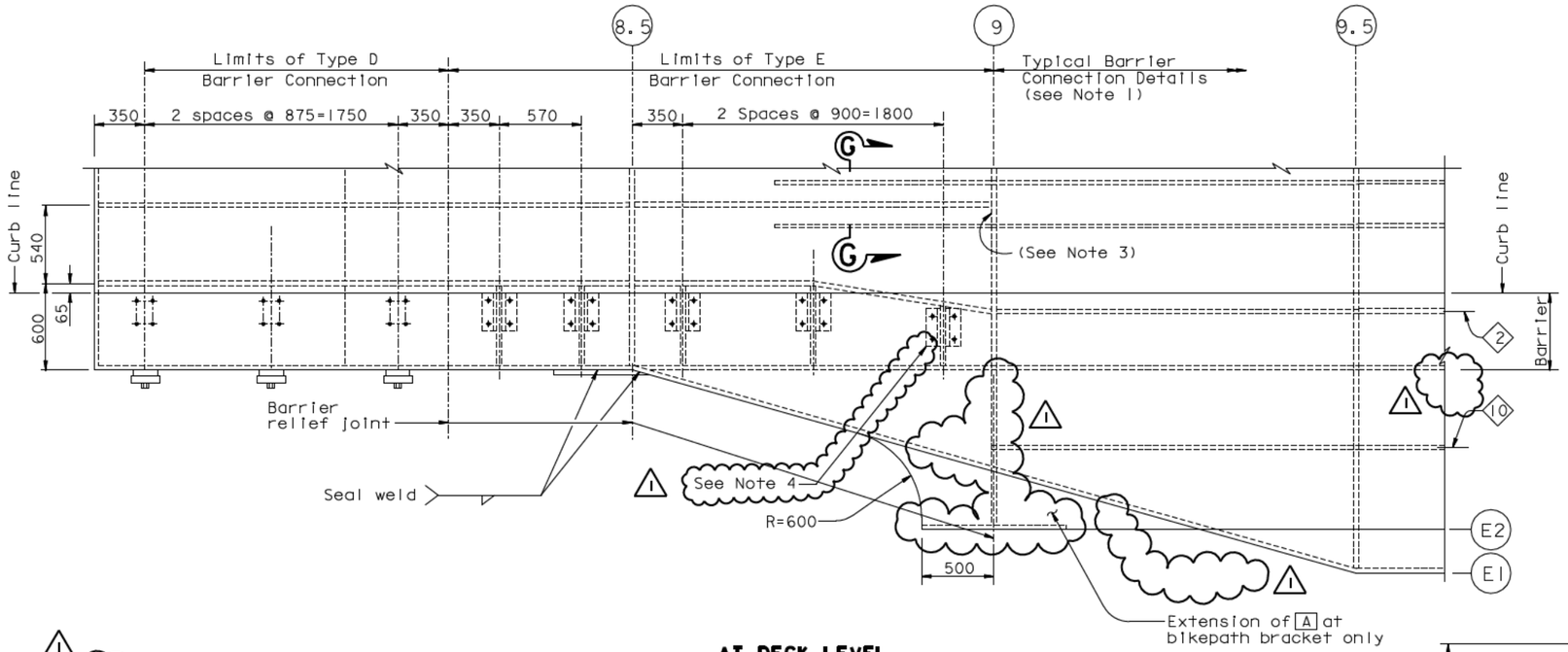

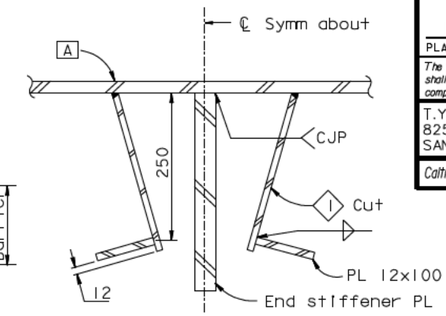

SECTION G-G (See Note 2)
1:5

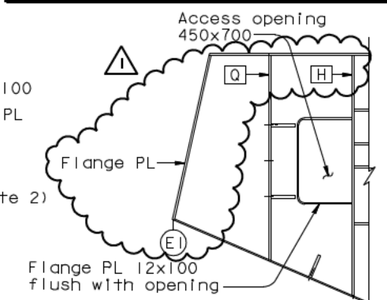

SECTION B-B
1:25

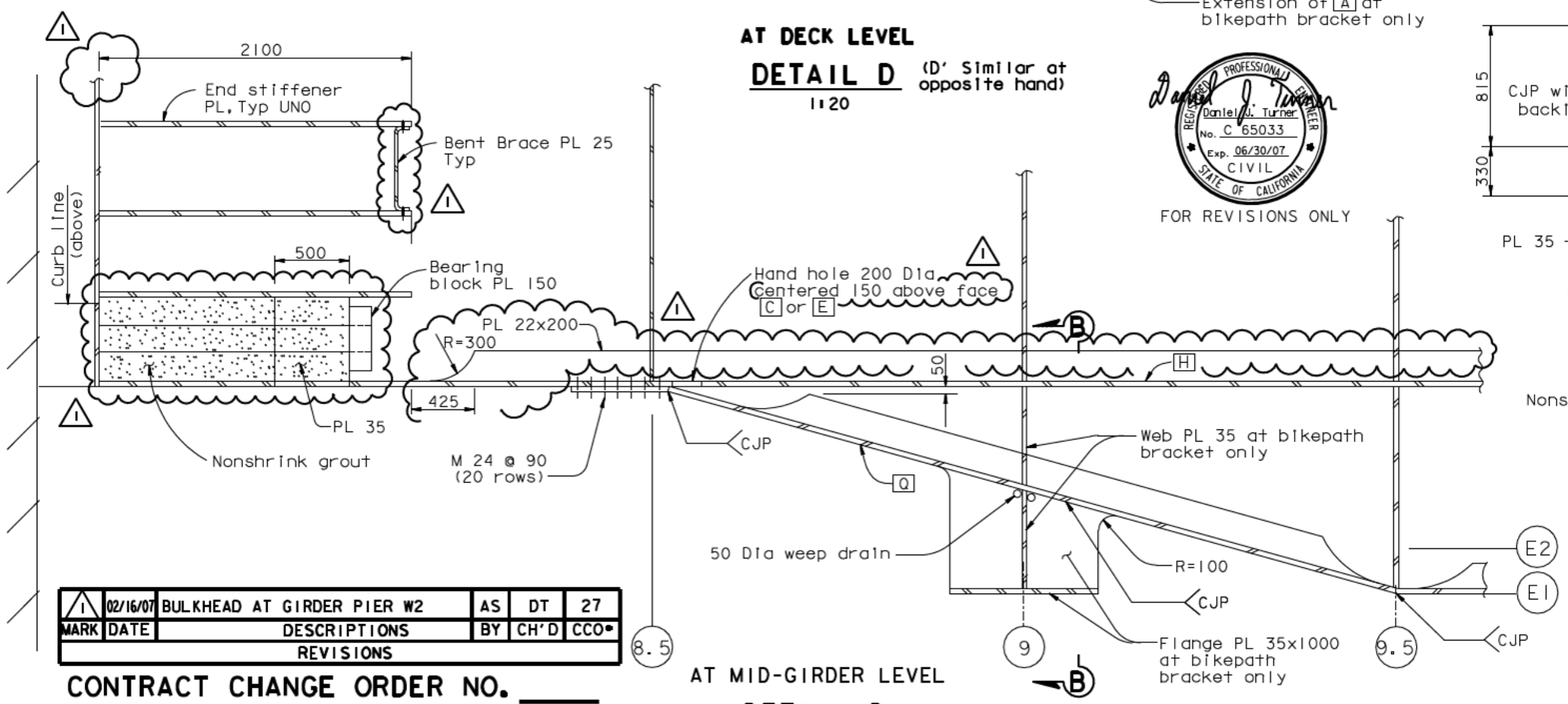

AT DECK LEVEL

DETAIL D (D' Similar at opposite hand)
1:20

AT MID-GIRDER LEVEL

DETAIL D (D' Similar at opposite hand)
1:20

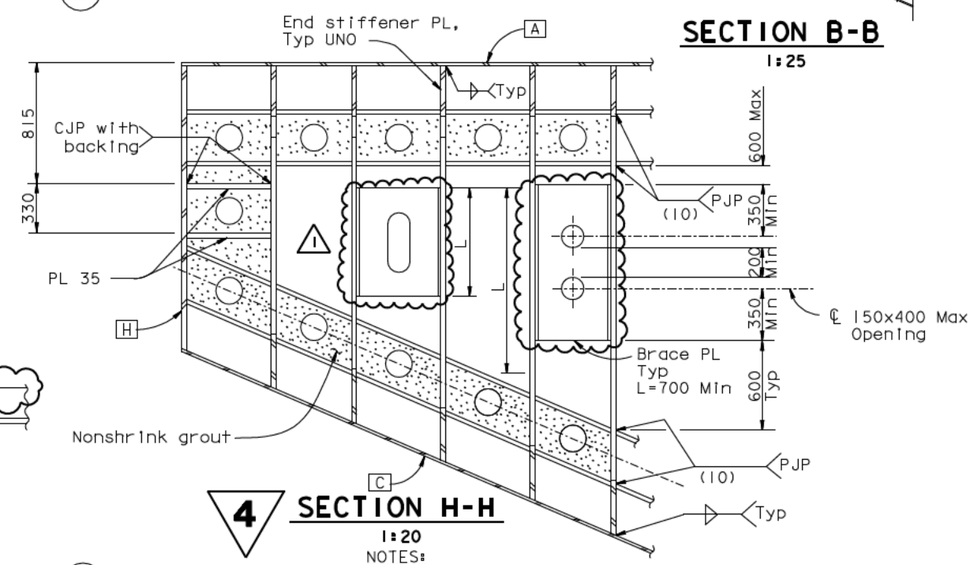

4 SECTION H-H
1:20

NOTES:

1. For typical barrier connection details, see "Typical Girder Details No. 14" sheet. For barrier connection Type D and E, see "Girder At Pier W2 No. 1" sheet.
2. For girder stiff ◇1 transition details not shown, see "Girder At Pier W2 No. 4" sheet.
3. For all girder stiffeners ◇1 (Type 2) the gap in the closure plates shall be caulked at PP9.
4. Base plate connection bolts in the barrier shall be adjusted to fit the anchor bolts in this connection.

MARK	DATE	DESCRIPTIONS	BY	CH'D	CCO#
1	02/16/07	BULKHEAD AT GIRDER PIER W2	AS	DT	27

REVISIONS

CONTRACT CHANGE ORDER NO. ____
SHEET ___ OF ___

4 REVISED PER ADDENDUM NO. 4 DATED DECEMBER 9, 2005

ALL DIMENSIONS ARE IN MILLIMETERS UNLESS OTHERWISE SHOWN

FOR REVISIONS ONLY

R. Valizadeh/V. Toan/Y.L./W.L./F.C.
DESIGN OVERSIGHT
SIGN OFF DATE 02/16/07

DESIGN	BY G. Baker	CHECKED	P. Ritchie
DETAILS	BY C. Mauch	CHECKED	T. McMeans
QUANTITIES	BY C. Mauch	CHECKED	M. Roberts

PREPARED FOR THE STATE OF CALIFORNIA DEPARTMENT OF TRANSPORTATION

R. Manzanarez
PROJECT ENGINEER

BRIDGE NO. 34-0006L/R
KILOMETER POST 13.2/13.9

SAN FRANCISCO OAKLAND BAY BRIDGE
EAST SPAN SEISMIC SAFETY PROJECT
SELF-ANCHORED SUSPENSION BRIDGE (SUPERSTRUCTURE & TOWER)

GIRDER AT PIER W2 NO. 3

Rev. Date: 5-18-98

ORIGINAL SCALE IN MILLIMETERS FOR REDUCED PLANS 0 10 20 30 40 50 60 70 80 90 100

CU 04
EA 0120F1

DISREGARD PRINTS BEARING EARLIER REVISION DATES

REVISION DATES (PRELIMINARY STAGE ONLY): 01/15/99 05/13/99 08/02/99 05/31/01 04/08/02 07/01/02 12/19/02 11/13/05

SHEET 250R1 OF

FILE -> I:\bb\04-012001\sas\contract plans and cco\cco\in progress\cco#27\aggdd03.dgn

USERNAME => glishansky DATE PLOTTED => 16 MAR 2007 TIME PLOTTED => 07:34:39

100 % PS&E

DIST.	COUNTY	ROUTE	KILOMETER POST TOTAL PROJECT	SHEET NO.	TOTAL SHEETS
04	SF	80	13.2/13.9	668R1	1204

George Baker
REGISTERED ENGINEER - CIVIL
12-6-04
PLANS APPROVAL DATE

REGISTERED PROFESSIONAL ENGINEER George S. Baker No. C 57112 Exp. 12/31/05 CIVIL STATE OF CALIFORNIA

The State of California or its officers or agents shall not be responsible for the accuracy or completeness of electronic copies of this plan sheet.

T.Y. LIN / MOFFATT & NICHOL
825 BATTERY STREET
SAN FRANCISCO, CA 94111

Caltrans now has a web site! To get to the web site, go to: http://www.dot.ca.gov

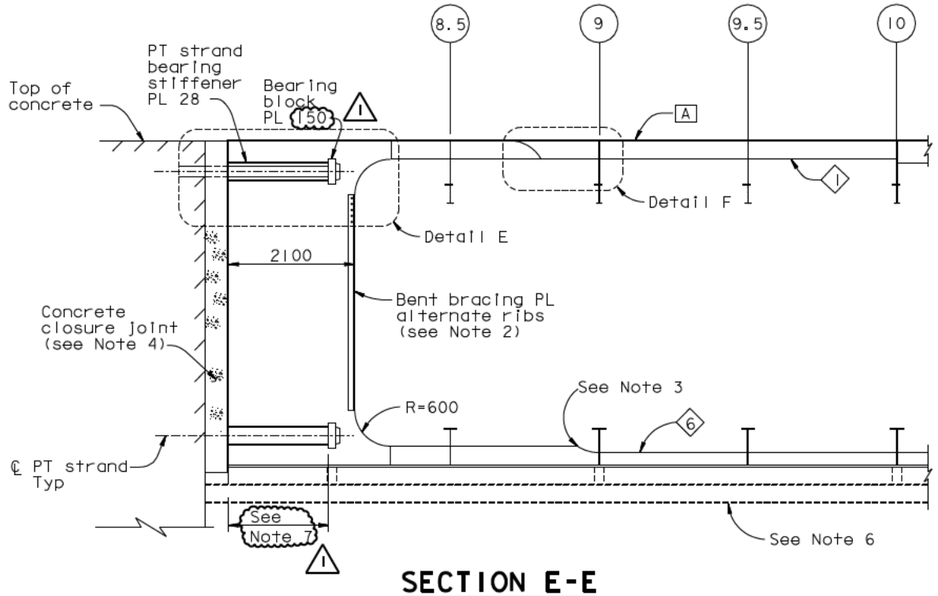

SECTION E-E
1:50

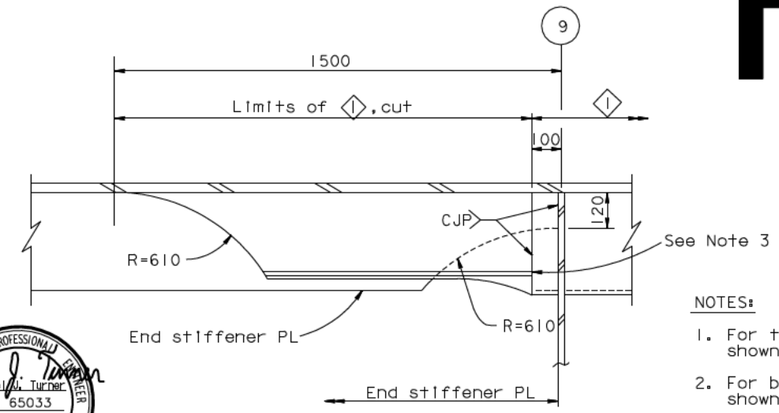

DETAIL F
1:10

FOR REVISIONS ONLY

MARK	DATE	DESCRIPTIONS	BY	CH'D	CCO#
1	02/16/07	BULKHEAD AT GIRDER PIER W2	GB	DT	27

REVISIONS

CONTRACT CHANGE ORDER NO. ____
SHEET ___ OF ___

NOTES:

1. For typical girder stiffener 1 details not shown, see "Typical Girder Details No.4" sheet.
2. For bracing details of end stiffener plate not shown, see "Girder At Pier W2 No.3" sheet.
3. For termination of end stiff plate and stiffeners, see typical details on "Typical Girder Details No.16" sheet.
4. For concrete closure joint details, see "W2 Cap Beam Reinforcement Details No.49" sheet.
5. For longitudinal shear PL details not shown, see "Typical Girder Details No.7" sheet.
6. For location and details of traveler rail, see "Traveler Rail Details" sheets.
7. For Cutout End Stiffener Plate detail, PT standard bearing stiffener PL dimensions and bearing block types, see "Girder At Pier W2 No.4A" and "Girder At Pier W2 No.4B" sheets.
8. The Contractor may substitute the PT duct with a 200 Max diameter standard PT pipe, subject to review and approval of the Engineer. The Contractor may also shop drill a 225 Max diameter hole in the Bulkhead PL to extend the PT pipe into the closure pour side of the Bulkhead PL. The interface between the PT pipe and the Bulkhead PL shall be seal welded all around.
9. At the Contractor's option silicone caulking may be used in lieu of seal weld.
10. At the Contractor's option the 10 mm PJP weld may be replaced with a 14 mm fillet weld at locations where there are openings in the End Stiffener PL or Long Shear PL only.

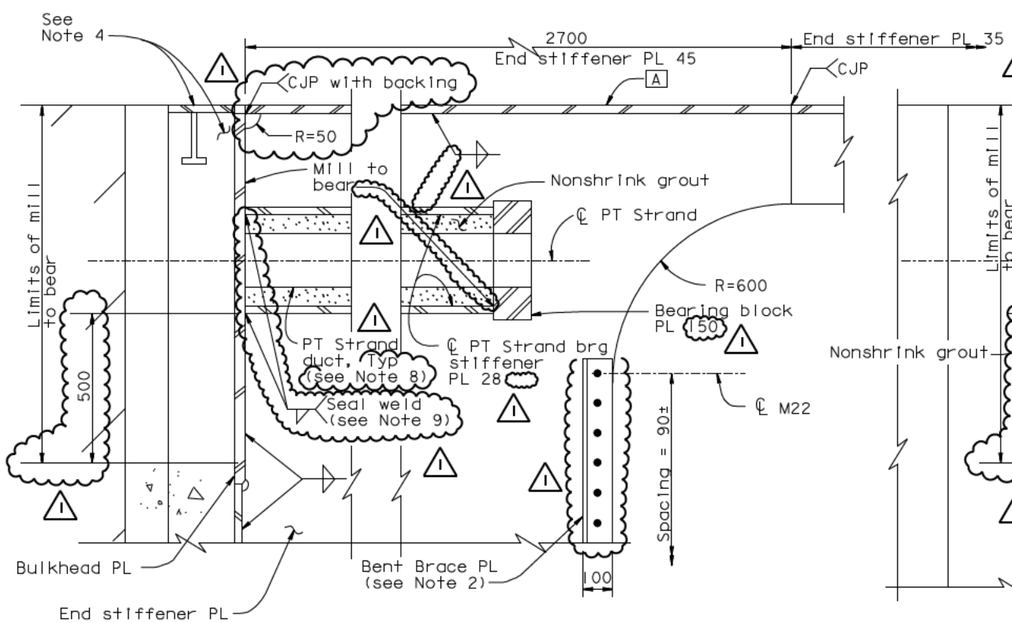

TYPICAL DETAIL AT END STIFFENER PLATE

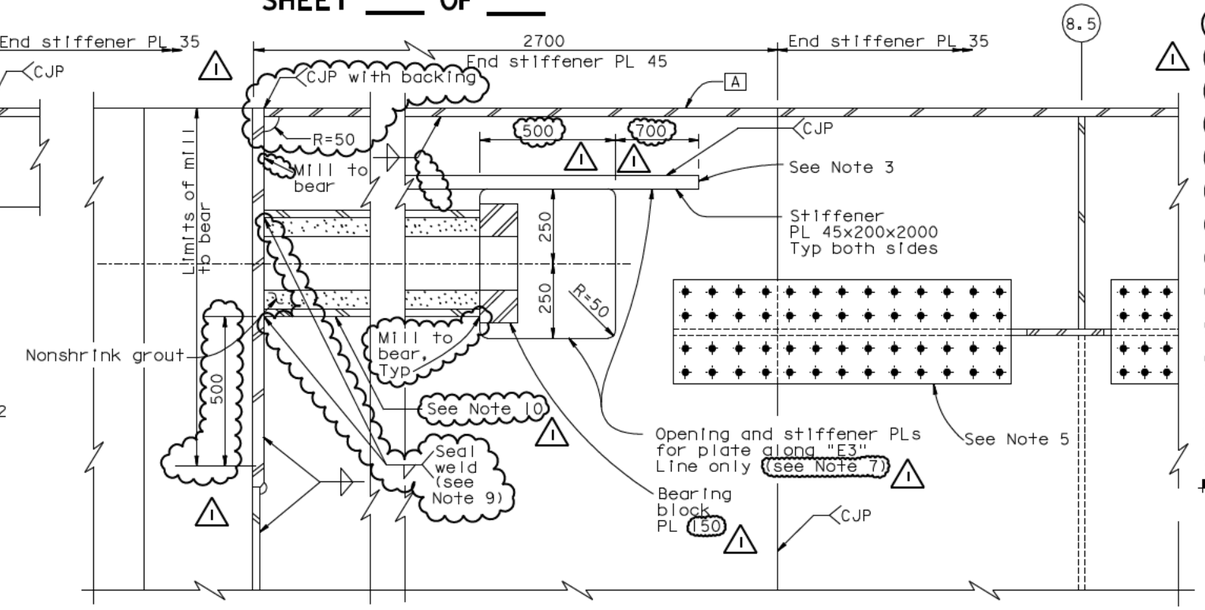

AT LONG SHEAR PLATE ALONG E3 WORKING LINE
(Long shear plate along E4 Working Line similar except as shown)

DETAIL E (See Note 7)
1:10

ALL DIMENSIONS ARE IN MILLIMETERS UNLESS OTHERWISE SHOWN

SAN FRANCISCO OAKLAND BAY BRIDGE
EAST SPAN SEISMIC SAFETY PROJECT
SELF-ANCHORED SUSPENSION BRIDGE
(SUPERSTRUCTURE & TOWER)

GIRDER AT PIER W2 NO. 4

R. Valizadeh/V. Toan/Y.L./W.L./F.C.
DESIGN OVERSIGHT
Ryan Valizadeh / Vong Toan / Y. Liu
SIGN OFF DATE 02/16/07

	BY	CHECKED
DESIGN	G. Baker	P. Ritchie
DETAILS	S. Camo	T. McMeans
QUANTITIES	C. Mauch	M. Roberts

PREPARED FOR THE STATE OF CALIFORNIA DEPARTMENT OF TRANSPORTATION

R. Manzanarez
PROJECT ENGINEER

BRIDGE NO. 34-0006L/R
KILOMETER POST 13.2/13.9

CU 04
EA 0120F1

DISREGARD PRINTS BEARING EARLIER REVISION DATES

REVISION DATES (PRELIMINARY STAGE ONLY): 01/15/99 05/15/99 08/02/99 05/31/01 04/08/02 07/01/02 12/19/02

SHEET 251R1 OF

Rev. Date: 5-18-98

ORIGINAL SCALE IN MILLIMETERS FOR REDUCED PLANS 0 10 20 30 40 50 60 70 80 90 100

FILE -> I:\bb\04-012001\sas\contract plans and cco\cco\in progress\cco#27\aggdd04.dgn

100 % PS&E

USERNAME => alfsanak$DATE PLOTTED => 16 MAR 2007 TIME PLOTTED => 07:35:44

DIST.	COUNTY	ROUTE	KILOMETER POST TOTAL PROJECT	SHEET NO.	TOTAL SHEETS
04	SF	80	13.2/13.9	668S1	1204

REGISTERED ENGINEER - CIVIL

02-16-07
PLANS APPROVAL DATE

REGISTERED PROFESSIONAL ENGINEER James P.Duxbury No. C 64677 Exp. 06/30/07 CIVIL STATE OF CALIFORNIA

The State of California or its officers or agents shall not be responsible for the accuracy or completeness of electronic copies of this plan sheet.

T.Y. LIN / MOFFATT & NICHOL
825 BATTERY STREET
SAN FRANCISCO, CA 94111

Caltrans now has a web site! To get to the web site, go to: http://www.dot.ca.gov

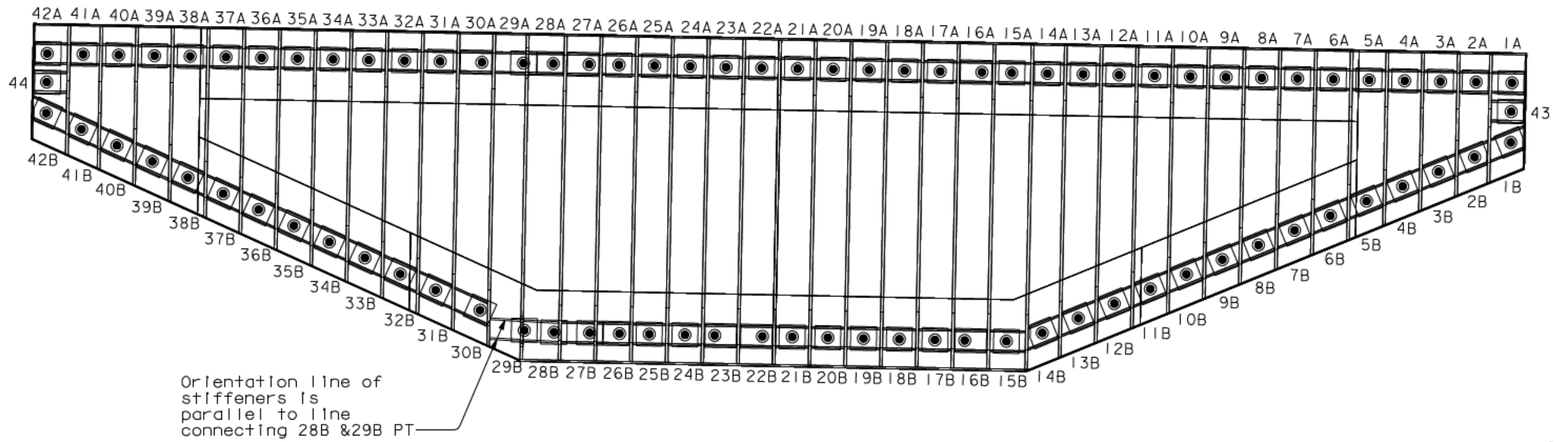

'W' LINE (LOOKING EAST)

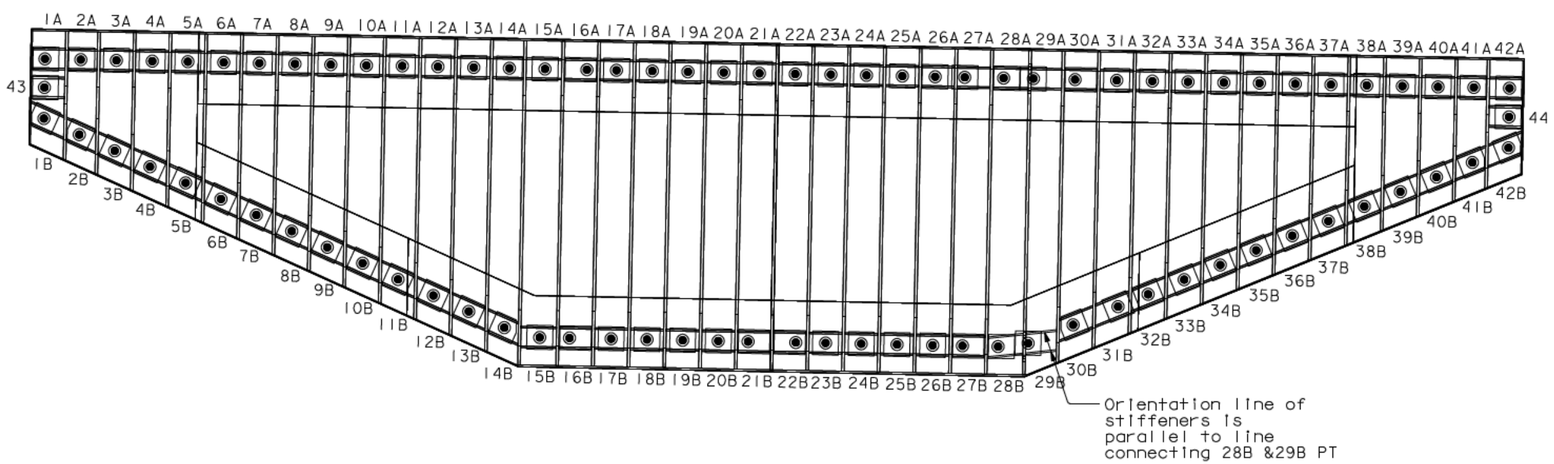

'E' LINE (LOOKING EAST)

BEARING BLOCK PL LAYOUT

1:50

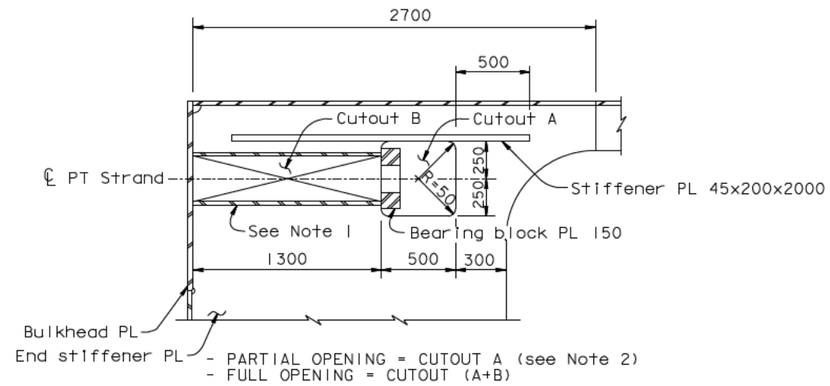

CUTOUT AT END STIFFENER PLATE

1:20

(Nonshrink grout not shown for clarity)

(For details not shown, see Typical Detail at End Stiffener Plate on "Girder At Pier W2 No.4" sheet.

NOTES:

1. At the Contractor's option the 10 mm PJP weld may be replaced with a 14 mm fillet weld at locations where there are openings in the End Stiffener PL or Long Shear PL only.

2. Cutout opening may be enlarged to accomodate bearing block geometry subject to review and approval of the Engineer.

MARK	DATE	DESCRIPTIONS	BY	CH'D	CCO#
0	02/16/07	BULKHEAD AT GIRDER PIER W2	JD	GB	27

REVISIONS

CONTRACT CHANGE ORDER NO. ____
SHEET ____ OF ____

100 % PS&E

DATE PLOTTED => 10 MAY 2007 TIME PLOTTED => 15:01:13

ALL DIMENSIONS ARE IN MILLIMETERS UNLESS OTHERWISE SHOWN

SAN FRANCISCO OAKLAND BAY BRIDGE
EAST SPAN SEISMIC SAFETY PROJECT
SELF-ANCHORED SUSPENSION BRIDGE
(SUPERSTRUCTURE & TOWER)

GIRDER AT PIER W2 NO. 4A

R. Valizadeh/V. Toan/Y.L./W.L./F.C.
DESIGN OVERSIGHT
Y. Liu
SIGN OFF DATE 02/16/07

	BY		CHECKED
DESIGN	J. Duxbury		G. Baker
DETAILS	A. Sanjines		M. Nader
QUANTITIES	J. Duxbury		A. Sanjines

PREPARED FOR THE STATE OF CALIFORNIA DEPARTMENT OF TRANSPORTATION

R. Manzanarez
PROJECT ENGINEER

BRIDGE NO. 34-0006L/R
KILOMETER POST 13.2/13.9

Rev. Date: 5-18-98

ORIGINAL SCALE IN MILLIMETERS FOR REDUCED PLANS 0 10 20 30 40 50 60 70 80 90 100

CU 04
EA 0120F1

DISREGARD PRINTS BEARING EARLIER REVISION DATES 02/16/07

REVISION DATES (PRELIMINARY STAGE ONLY)

SHEET 251S1 OF

FILE -> I:\bb\04-01200\sas\contract plans and cco\cco\in progress\cco#27\sup cco#27\aggdd04s.dgn

USERNAME => ptom

DIST.	COUNTY	ROUTE	KILOMETER POST TOTAL PROJECT	SHEET NO.	TOTAL SHEETS
04	SF	80	13.2/13.9	668S2	1204

Caltrans Metric

REGISTERED ENGINEER - CIVIL

02-16-07
PLANS APPROVAL DATE

REGISTERED PROFESSIONAL ENGINEER James P. Duxbury No. C 64677 Exp. 06/30/07 CIVIL STATE OF CALIFORNIA

The State of California or its officers or agents shall not be responsible for the accuracy or completeness of electronic copies of this plan sheet.

T.Y. LIN / MOFFATT & NICHOL
825 BATTERY STREET
SAN FRANCISCO, CA 94111

Caltrans now has a web site! To get to the web site, go to: http://www.dot.ca.gov

Bearing Block Table

WESTBOUND							
PT	Bearing Block	Opening	PT Strand Brg Stiff PL	PT	Bearing Block	Opening	PT Strand Brg Stiff PL
1A	B	None	28x1682	1B	E	None	28x1682
2A	B	None	28x1682	2B	D	None	28x1682
3A	Standard	None	28x1682	3B	C	None	28x1682
4A	Standard	None	28x1682	4B	C	None	28x1682
5A	Standard	None	28x1682	5B	C	None	28x1682
6A	Standard	None	28x1682	6B	C	None	28x1682
7A	Standard	None	28x1682	7B	C	None	28x1682
8A	Standard	None	28x1682	8B	C	None	28x1682
9A	Standard	None	28x1682	9B	C	None	28x1682
10A	Standard	None	28x1682	10B	C	None	28x1682
11A	Standard	None	28x1682	11B	C	None	28x1682
12A	Standard	None	28x1682	12B	C	None	28x1682
13A	Standard	None	28x1682	13B	C	None	28x1682
14A	Standard	None	28x1682	14B	D	None	28x1682
15A	Standard	None	28x1682	15B	Standard	None	28x1682
16A	A	None	28x1682	16B	A	None	28x1682
17A	Standard	None	28x1682	17B	Standard	None	28x1682
18A	Standard	None	28x1682	18B	Standard	None	28x1682
19A	Standard	None	28x1682	19B	Standard	None	28x1682
20A	Standard	None	28x1682	20B	Standard	None	28x1682
21A	Standard	None	28x1682	21B	Standard	None	28x1682
22A	Standard	None	28x1682	22B	A	None	28x1682
23A	Standard	None	28x1682	23B	A	None	28x1682
24A	Standard	None	28x1682	24B	Standard	None	28x1682
25A	Standard	None	28x1682	25B	Standard	None	28x1682
26A	Standard	None	28x1682	26B	A	None	28x1300
27A	A	None	28x1682	27B	Standard	Full Opening	28x1300
28A	A	None	28x1300	28B	Standard	Full Opening	28x1300
29A	Standard	Full Opening	28x1300	29B	Standard	Full Opening	28x1300
30A	A	None	28x1682	30B	Standard	Partial Opening	28x1300
31A	Standard	None	28x1682	31B	C	None	28x1682
32A	Standard	None	28x1682	32B	C	None	28x1682
33A	Standard	None	28x1682	33B	C	None	28x1682
34A	Standard	None	28x1682	34B	C	None	28x1682
35A	Standard	None	28x1682	35B	C	None	28x1682
36A	Standard	None	28x1682	36B	C	None	28x1682
37A	Standard	None	28x1682	37B	C	None	28x1682
38A	Standard	None	28x1682	38B	C	None	28x1682
39A	Standard	None	28x1682	39B	C	None	28x1682
40A	Standard	None	28x1682	40B	C	None	28x1682
41A	B	None	28x1682	41B	D	None	28x1682
42A	B	None	28x1682	42B	E	None	28x1682
43	B	None	35x500				
44	B	None	35x500				

EASTBOUND							
PT	Bearing Block	Opening	PT Strand Brg Stiff PL	PT	Bearing Block	Opening	PT Strand Brg Stiff PL
1A	B	None	28x1682	1B	E	None	28x1682
2A	B	None	28x1682	2B	D	None	28x1682
3A	Standard	None	28x1682	3B	C	None	28x1682
4A	Standard	None	28x1682	4B	C	None	28x1682
5A	Standard	None	28x1682	5B	C	None	28x1682
6A	Standard	None	28x1682	6B	C	None	28x1682
7A	Standard	None	28x1682	7B	C	None	28x1682
8A	Standard	None	28x1682	8B	C	None	28x1682
9A	Standard	None	28x1682	9B	C	None	28x1682
10A	Standard	None	28x1682	10B	C	None	28x1682
11A	Standard	None	28x1682	11B	C	None	28x1682
12A	Standard	None	28x1682	12B	C	None	28x1682
13A	Standard	None	28x1682	13B	C	None	28x1682
14A	Standard	None	28x1682	14B	D	None	28x1682
15A	Standard	None	28x1682	15B	Standard	None	28x1682
16A	A	None	28x1682	16B	A	None	28x1682
17A	Standard	None	28x1682	17B	Standard	None	28x1682
18A	Standard	None	28x1682	18B	Standard	None	28x1682
19A	Standard	None	28x1682	19B	Standard	None	28x1682
20A	Standard	None	28x1682	20B	Standard	None	28x1682
21A	Standard	None	28x1682	21B	A	None	28x1682
22A	Standard	None	28x1682	22B	A	None	28x1682
23A	Standard	None	28x1682	23B	Standard	None	28x1682
24A	Standard	None	28x1682	24B	Standard	None	28x1682
25A	Standard	None	28x1682	25B	Standard	None	28x1682
26A	Standard	None	28x1300	26B	Standard	None	28x1682
27A	Standard	Partial Opening	28x1300	27B	A	None	28x1682
28A	A	None	28x1300	28B	A	None	28x1300
29A	Standard	Full Opening	28x1300	29B	Standard	Full Opening	28x1300
30A	A	None	28x1682	30B	E	None	28x1682
31A	Standard	None	28x1682	31B	Standard	Partial Opening	28x1300
32A	Standard	None	28x1682	32B	C	None	28x1300
33A	Standard	None	28x1682	33B	C	None	28x1682
34A	Standard	None	28x1682	34B	C	None	28x1682
35A	Standard	None	28x1682	35B	C	None	28x1682
36A	Standard	None	28x1682	36B	C	None	28x1682
37A	Standard	None	28x1682	37B	C	None	28x1682
38A	Standard	None	28x1682	38B	C	None	28x1682
39A	Standard	None	28x1682	39B	C	None	28x1682
40A	Standard	None	28x1682	40B	C	None	28x1682
41A	B	None	28x1682	41B	D	None	28x1682
42A	B	None	28x1682	42B	E	None	28x1682
43	B	None	35x500				
44	B	None	35x500				

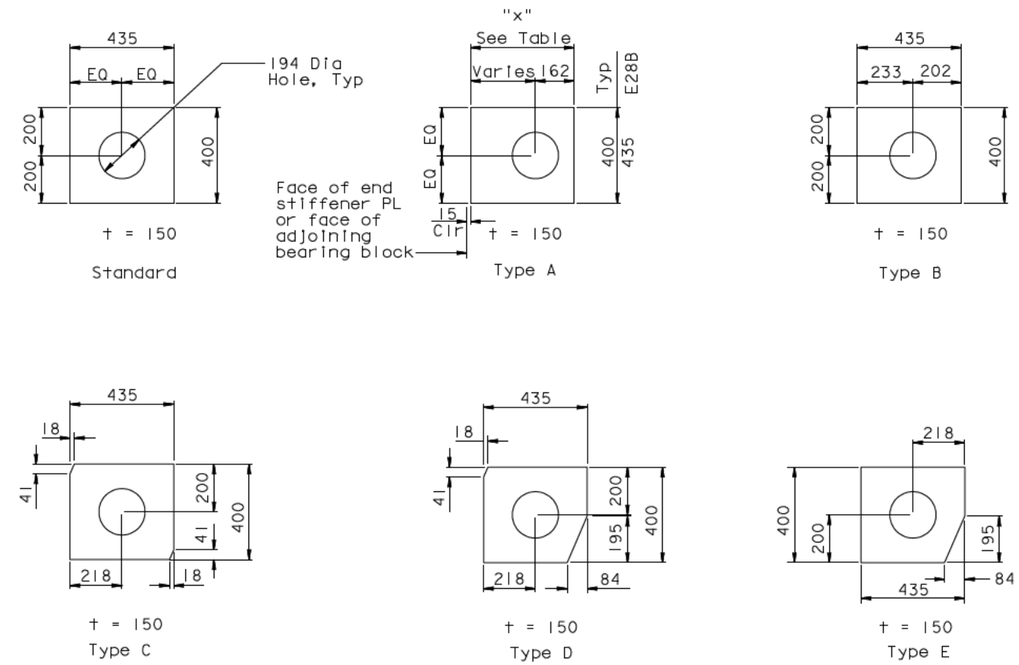

BEARING BLOCK TYPES

Bearing Block Type A Table

WESTBOUND					
PT	Bearing Block	x	PT	Bearing Block	x
16A	A	525	16B	A	525
27A	A	525	22B	A	525
28A	A	435	23B	A	525
30A	A	525	26B	A	435

EASTBOUND					
PT	Bearing Block	x	PT	Bearing Block	x
16A	A	525	16B	A	525
28A	A	435	21B	A	525
30A	A	525	22B	A	525
			27B	A	525
			28B*	A	435

*Note: Bearing Block 28B shall be 435x435

MARK	DATE	DESCRIPTIONS	BY	CH'D	CCO#
0	02/16/07	BULKHEAD AT GIRDER PIER W2	JD	GB	27

REVISIONS

CONTRACT CHANGE ORDER NO. ____
SHEET ____ OF ____

100 % PS&E

ALL DIMENSIONS ARE IN MILLIMETERS UNLESS OTHERWISE SHOWN

SAN FRANCISCO OAKLAND BAY BRIDGE
EAST SPAN SEISMIC SAFETY PROJECT
SELF-ANCHORED SUSPENSION BRIDGE
(SUPERSTRUCTURE & TOWER)

GIRDER AT PIER W2 NO. 4B

R. Valizadeh/V. Toan/Y.L./W.L./F.C.
DESIGN OVERSIGHT
Roya Valizadeh / Vong P. Toan / Y. Liu
SIGN OFF DATE 02/16/07

	BY		CHECKED	
DESIGN	BY	J. Duxbury	CHECKED	G. Baker
DETAILS	BY	A. Sanjines	CHECKED	M. Nader
QUANTITIES	BY	J. Duxbury	CHECKED	A. Sanjines

PREPARED FOR THE STATE OF CALIFORNIA DEPARTMENT OF TRANSPORTATION

R. Manzanarez
PROJECT ENGINEER

BRIDGE NO. 34-0006L/R
KILOMETER POST 13.2/13.9

Rev. Date: 5-18-98

ORIGINAL SCALE IN MILLIMETERS FOR REDUCED PLANS 0 10 20 30 40 50 60 70 80 90 100

CU 04
EA 0120F1

DISREGARD PRINTS BEARING EARLIER REVISION DATES

REVISION DATES (PRELIMINARY STAGE ONLY) 02/16/07

SHEET 251S2 OF

FILE -> I:\bb\04-012001\sas\contract plans and cco\cco\in progress\cco#27\sup cco#27\aggdd04s2.dgn

USERNAME => pfram DATE PLOTTED => 10 MAY 2007 TIME PLOTTED => 15:02:03

DIST.	COUNTY	ROUTE	KILOMETER POST TOTAL PROJECT	SHEET NO.	TOTAL SHEETS
04	SF	80	13.2/13.9	669R1	1204

George Baker
REGISTERED ENGINEER - CIVIL
12-6-04
PLANS APPROVAL DATE

REGISTERED PROFESSIONAL ENGINEER George S. Baker No. C57112 Exp. 12/31/05 CIVIL STATE OF CALIFORNIA

The State of California or its officers or agents shall not be responsible for the accuracy or completeness of electronic copies of this plan sheet.

T.Y. LIN / MOFFATT & NICHOL
825 BATTERY STREET
SAN FRANCISCO, CA 94111

Caltrans now has a web site! To get to the web site, go to: http://www.dot.ca.gov

REGISTERED PROFESSIONAL ENGINEER Daniel J. Turner No. C 65033 Exp. 06/30/07 CIVIL STATE OF CALIFORNIA

FOR REVISIONS ONLY

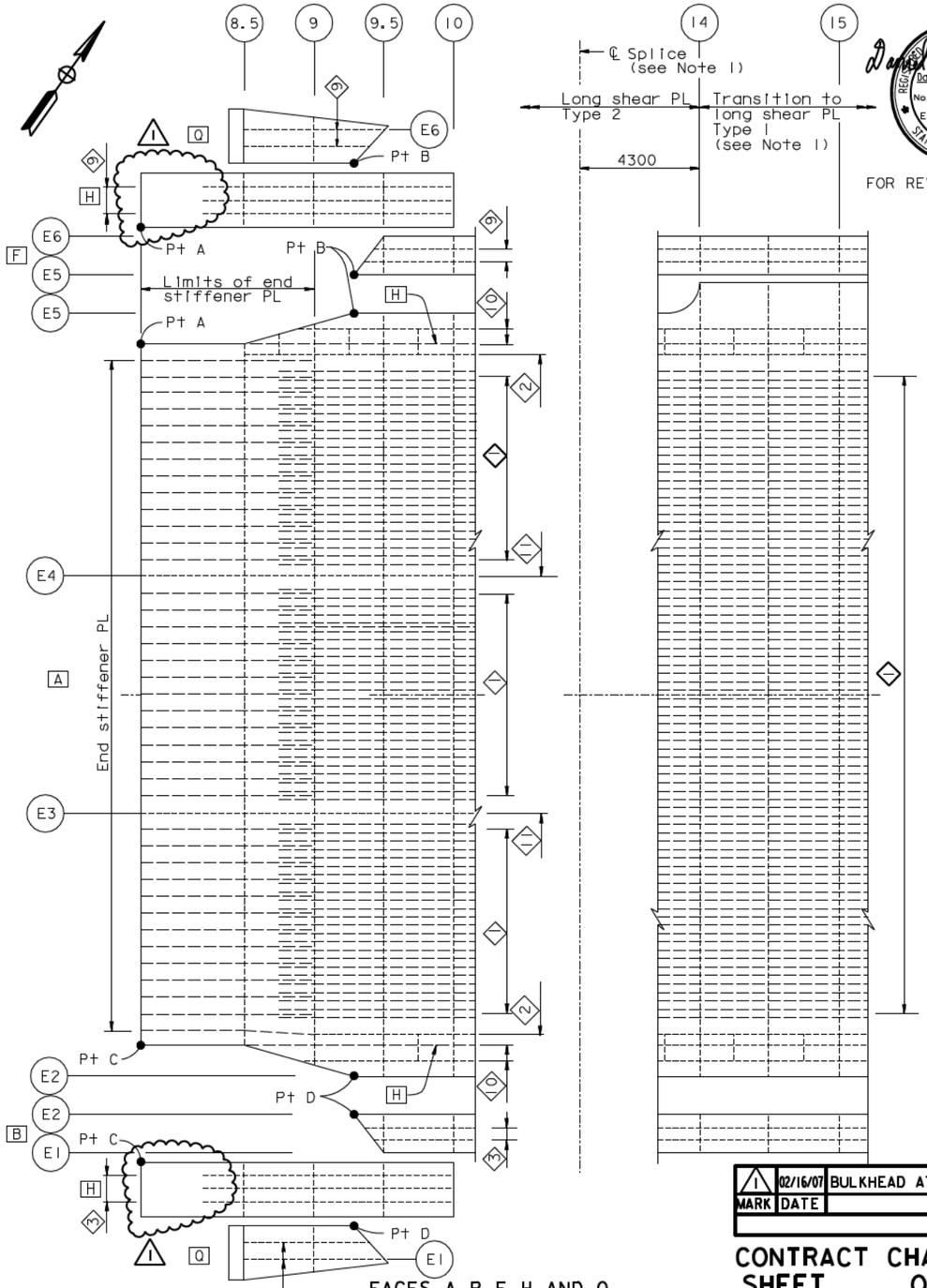

FACES A, B, F, H AND Q
("E" LINE SHOWN, "W" LINE SIMILAR)

TOP GIRDER FACE LAYOUT

1:100

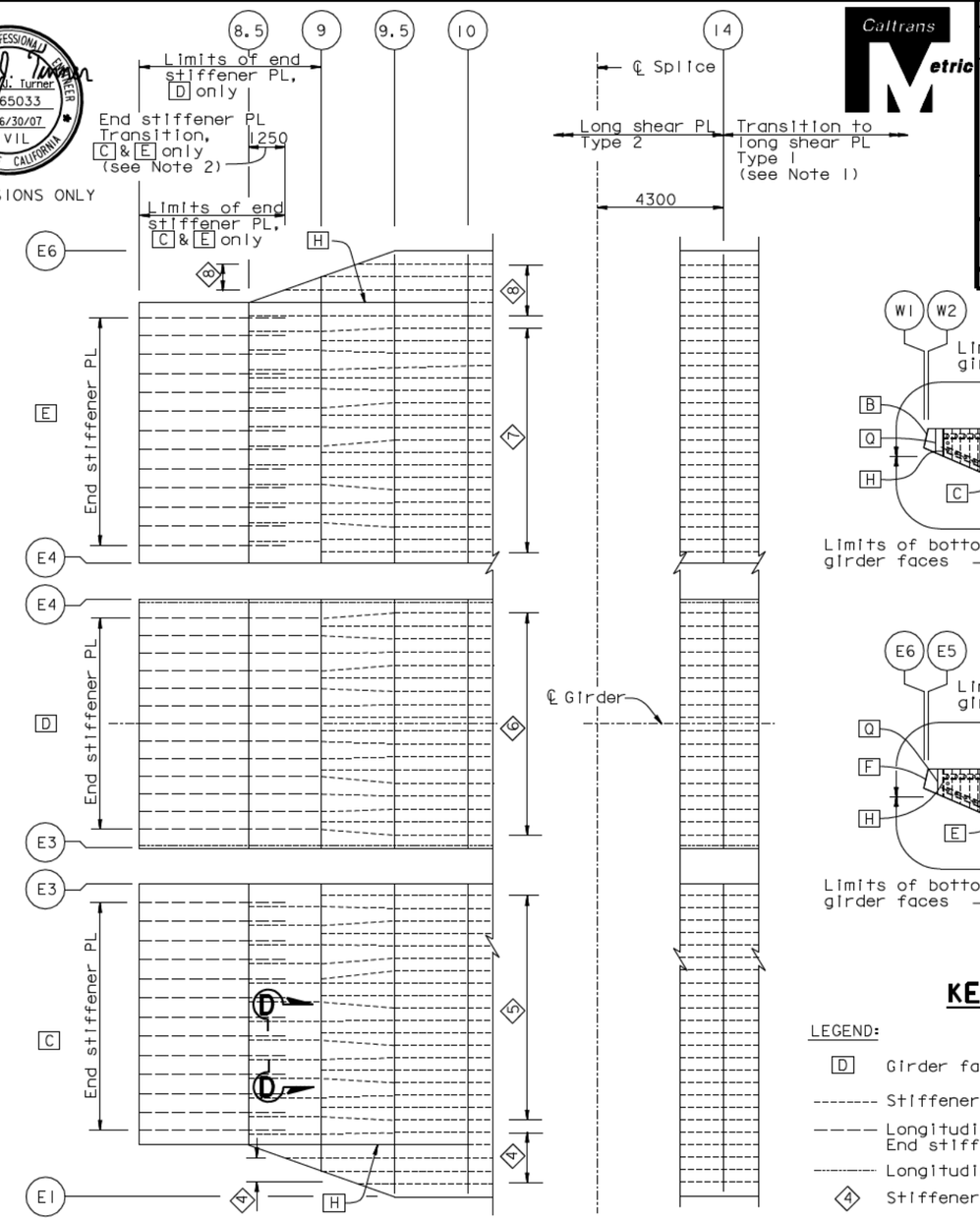

FACES C, D AND E
("E" LINE SHOWN, "W" LINE SIMILAR)

BOTTOM GIRDER FACE LAYOUT

1:100

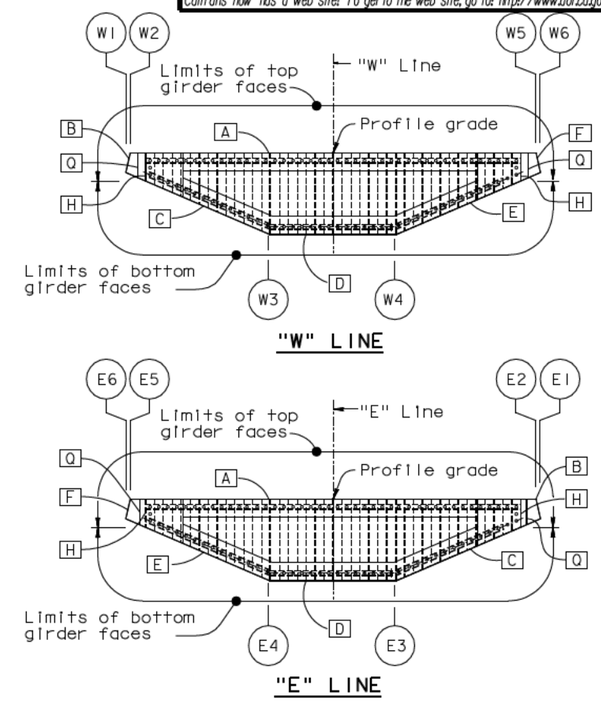

KEY CROSS SECTIONS

1:200

LEGEND:

- D — Girder face designation D
- -------- Stiffener type 4, 5, 6, 7 or 8
- ——— Longitudinal stiffener Type 1 leg or End stiffener PL
- ---------- Longitudinal stiffener Type 1 or 2
- ◇4 — Stiffener Type 4 designation

NOTES:

1. For longitudinal shear plate transition details, see "Typical Girder Details No. 7" sheet.
2. For Section D-D end stiffener plate transition details for C and E, see "Girder At Pier W2 No. 6" sheet.

MARK	DATE	DESCRIPTIONS	BY	CH'D	CCO#
1	02/16/07	BULKHEAD AT GIRDER PIER W2	AS	DT	27

REVISIONS

CONTRACT CHANGE ORDER NO. ____
SHEET ___ OF ___

ALL DIMENSIONS ARE IN MILLIMETERS UNLESS OTHERWISE SHOWN

R. Vallizadeh/V. Toan/Y.L./W.L./F.C.
DESIGN OVERSIGHT
Roya Vallizadeh / Vong Toan / Y. Liu
SIGN OFF DATE 02/16/07

DESIGN	BY G. Baker	CHECKED P. Ritchie	
DETAILS	BY M. Gulyas	CHECKED T. McMeans	
QUANTITIES	BY C. Mauch	CHECKED M. Roberts	

PREPARED FOR THE STATE OF CALIFORNIA DEPARTMENT OF TRANSPORTATION

R. Manzanarez
PROJECT ENGINEER

BRIDGE NO. 34-0006L/R
KILOMETER POST 13.2/13.9

SAN FRANCISCO OAKLAND BAY BRIDGE
EAST SPAN SEISMIC SAFETY PROJECT
SELF-ANCHORED SUSPENSION BRIDGE
(SUPERSTRUCTURE & TOWER)

GIRDER AT PIER W2 NO. 5

Rev. Date: 5-18-98

ORIGINAL SCALE IN MILLIMETERS FOR REDUCED PLANS 0 10 20 30 40 50 60 70 80 90 100

CU 04
EA 0120F1

DISREGARD PRINTS BEARING EARLIER REVISION DATES

REVISION DATES (PRELIMINARY STAGE ONLY) 01/15/99 05/15/99 08/02/99 05/31/01 04/08/02 07/01/02 12/19/02

SHEET 252R1 OF

FILE -> I:\bb\04-012001\sas\contract plans and cco\cco\in progress\cco#27\aggdd05.dgn

USERNAME => a11shanak DATE PLOTTED => 16 MAR 2007 TIME PLOTTED => 07:39:34

100% PS&E

DIST.	COUNTY	ROUTE	KILOMETER POST TOTAL PROJECT	SHEET NO.	TOTAL SHEETS
04	SF	80	13.2/13.9	670R1	1204

Caltrans Metric

George Baker
REGISTERED ENGINEER - CIVIL
12-6-04
PLANS APPROVAL DATE

REGISTERED PROFESSIONAL ENGINEER George S. Baker No. C 57112 Exp. 12/31/05 CIVIL STATE OF CALIFORNIA

The State of California or its officers or agents shall not be responsible for the accuracy or completeness of electronic copies of this plan sheet.

T.Y. LIN / MOFFATT & NICHOL
825 BATTERY STREET
SAN FRANCISCO, CA 94111

Caltrans now has a web site! To get to the web site, go to: http://www.dot.ca.gov

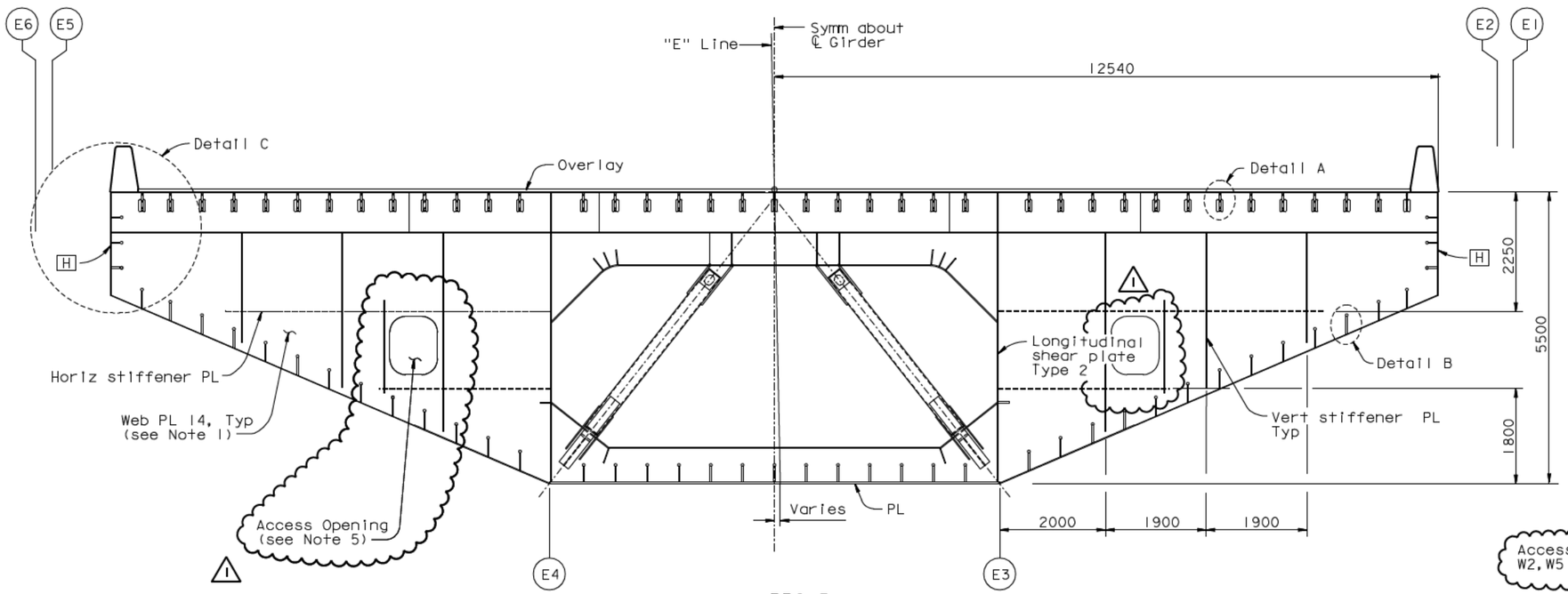

PP8.5

SECTION AT FLOORBEAM

1:50

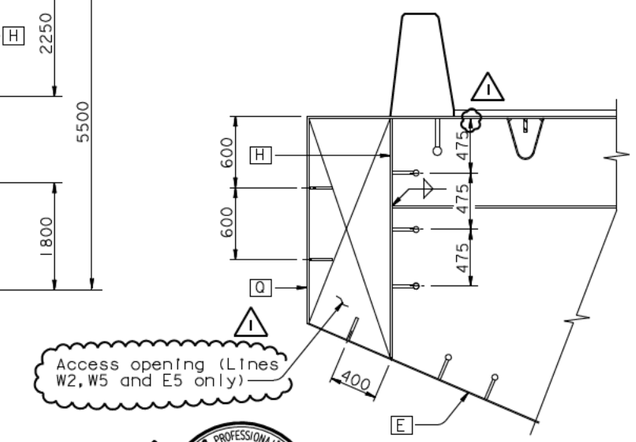

AT PP9

DETAIL C

1:25

Daniel J. Turner
REGISTERED PROFESSIONAL ENGINEER Daniel J. Turner No. C 65033 Exp. 06/30/07 CIVIL STATE OF CALIFORNIA

FOR REVISIONS ONLY

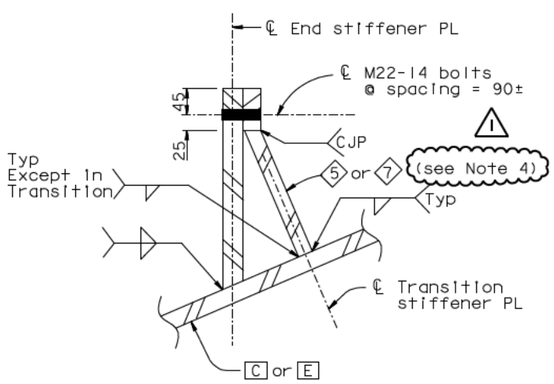

SECTION D-D

END STIFFENER TRANSITION DETAIL

1:5

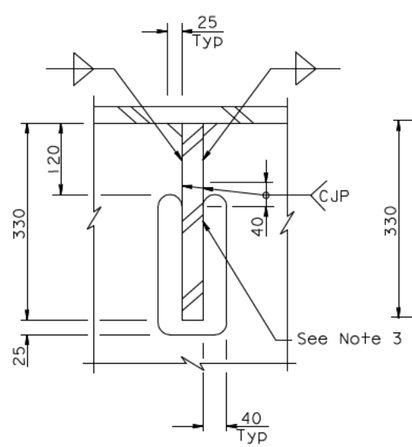

DETAIL A

1:5

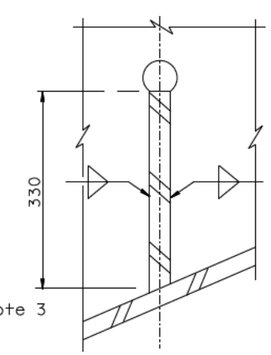

DETAIL B

1:5

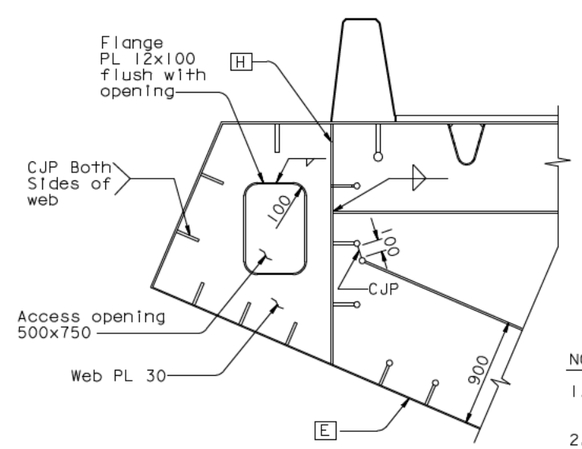

AT PP9.5, PP10

DETAIL C

1:25

MARK	DATE	DESCRIPTIONS	BY	CH'D	CCO#
1	02/16/07	BULKHEAD AT GIRDER PIER W2	AS	DT	27

REVISIONS

CONTRACT CHANGE ORDER NO. ____
SHEET ___ OF ___

NOTES:

1. For web PL sizes at chevron braces , see "Typical Floorbeam Details No.2" sheet.
2. For details not shown, see "Typical Floorbeam Details" sheets.
3. Grind off end of CJP welds. Provide 12 mm trailer with transition to cut-out. See similar detail A on "Typical Girder Details No.4" sheet. Grind opening to 6 micron finish in accordance with ANSI B46.1.
4. Stiffeners 5 and 7 may be terminated without transition taper at 50 mm east of PP8.5.
5. For Access Opening details, see "Typical Floorbeam Details No. 1" sheet.

ALL DIMENSIONS ARE IN MILLIMETERS UNLESS OTHERWISE SHOWN

SAN FRANCISCO OAKLAND BAY BRIDGE
EAST SPAN SEISMIC SAFETY PROJECT
SELF-ANCHORED SUSPENSION BRIDGE
(SUPERSTRUCTURE & TOWER)

GIRDER AT PIER W2 NO.6

R. Valizadeh/V. Toan/Y.L./W.L./F.C.
DESIGN OVERSIGHT
SIGN OFF DATE 02/16/07

	BY	CHECKED
DESIGN	G. Baker	P. Ritchie
DETAILS	S. Camo	T. McMeans
QUANTITIES	C. Mauch	M. Roberts

PREPARED FOR THE STATE OF CALIFORNIA DEPARTMENT OF TRANSPORTATION

R. Manzanarez
PROJECT ENGINEER

BRIDGE NO. 34-0006L/R
KILOMETER POST 13.2/13.9

CU 04
EA 0120F1

DISREGARD PRINTS BEARING EARLIER REVISION DATES

REVISION DATES (PRELIMINARY STAGE ONLY) 01/15/99 05/15/99 08/02/99 05/31/01 04/08/02 07/01/02 12/19/02

SHEET 253R1 OF

Rev. Date: 5-18-98

ORIGINAL SCALE IN MILLIMETERS FOR REDUCED PLANS 0 10 20 30 40 50 60 70 80 90 100

FILE -> I:\bb\04-012001\sas\contract plans and cco\cco\in progress\cco#27\aggdd05a.dgn

100 % PS&E

USERNAME => alishansky DATE PLOTTED => 16 MAR 2007 TIME PLOTTED => 07:40:44

STATE OF CALIFORNIA - DEPARTMENT OF TRANSPORTATION

CONTRACT CHANGE ORDER

Change Requested by: Engineer

CCO: 28 Suppl. No. 0 Contract No. 04 – 0120F4 Road SF-80-13.2/13.9 **FED. AID LOC.:**

To: **AMERICAN BRIDGE/FLUOR ENTERPRISES INC A JOINT VENTURE**

You are directed to make the following changes from the plans and specifications or do the following described work not included in the plans and specifications for this contract. ***NOTE: This change order is not effective until approved by the Engineer.***

Description of work to be done, estimate of quantities and prices to be paid. (Segregate between additional work at contract price, agreed price and force account.) Unless otherwise stated, rates for rental of equipment cover only such time as equipment is actually used and no allowance will be made for idle time. This last percentage shown is the net accumulated increase or decrease from the original quantity in the Engineer's Estimate.

Adjustment of Compensation at Lump Sum Price:

ITEM 1.

Delete handrail access system along the West Deviation Saddle as shown on sheets two (2) through nine (9) of this change order. The following revised plan sheets detail all changes: 792R1, 793R1, 807R1, 909R1, 911R1, 912R1, 913R2 and 914R1 (of 1204).

This change order resolves costs associated with Contractor Request For Information (RFI) No. 332 with respect to the changes to the above referenced handrail access system.

For this work, the Contractor will receive a lump sum price of $150,000.00. This sum constitutes full and complete compensation for furnishing all labor, material, tools and incidentals including all markups, all direct and indirect costs, all overhead expenses, and all associated project impacts by reason of this change.

Adjustment of Compensation at Lump Sum Price..... $150,000.00

ITEM 2.

The item identified above in this change order has been paid as part of CCO 108 resolution. Therefore, the amount due under this change order will be adjusted by the amount paid under CCO 108 to prevent a double payment. Total amount paid under CCO 108, and to be credited to this change, is $150,000.00.

Adjustment of Compensation at Lump Sum Price..... <$150,000.00>

CHANGE ORDER COST AND TIME SUMMARY

(ITEM 1) Adjustment of Compensation for work pursuant to this change order	$150,000.00
(ITEM 2) Amount paid under CCO 108 for this change order	<$150,000.00>

Total net pay for this change order..... $0.00

Contract time is addressed in CCO 108 for all work identified in this change order. Therefore, contract time will not be adjusted in this change order.

Estimated Cost: Increase ☐ Decrease ☐ $0.00

By reason of this order the time of completion will be adjusted as follows: 0 days

Submitted by

Signature D Balan **Resident Engineer** Per Brian Boal for Gary Pursell, Sup. T.E. **Date** 2-22-10

Approval Recommended by

Signature Gary Pursell **Supervising Transportation Engineer** Gary Pursell, Sup. T.E. **Date** 2/22/10

Engineer Approval by

Signature Gary Pursell **Supervising Transportation Engineer** Gary Pursell, Sup. T.E. **Date** 2/24/10

We the undersigned contractor, have given careful consideration to the change proposed and agree, if this proposal is approved, that we will provide all equipment, furnish the materials, except as otherwise be noted above, and perform all services necessary for the work above specified, and will accept as full payment therefor the prices shown above.

NOTE: If you, the contractor, do not sign acceptance of this order, your attention is directed to the requirements of the specifications as to proceeding with the ordered work and filing a written protest within the time therein specified.

Contractor Acceptance by

Signature [signature] (Print name and title) Michael D. Flowers Project Director **Date** 2-23-10

DIST.	COUNTY	ROUTE	KILOMETER POST TOTAL PROJECT	SHEET NO.	TOTAL SHEETS
04	SF	80	13.2/13.9	792R1	1204

REGISTERED ENGINEER - CIVIL
12-6-04
PLANS APPROVAL DATE

REGISTERED PROFESSIONAL ENGINEER John Sun No. C 54648 Exp. 12/31/05 CIVIL STATE OF CALIFORNIA

The State of California or its officers or agents shall not be responsible for the accuracy or completeness of electronic copies of this plan sheet.

T.Y. LIN / MOFFATT & NICHOL
825 BATTERY STREET
SAN FRANCISCO, CA 94111

Caltrans now has a web site! To get to its web site, go to: http://www.dot.ca.gov

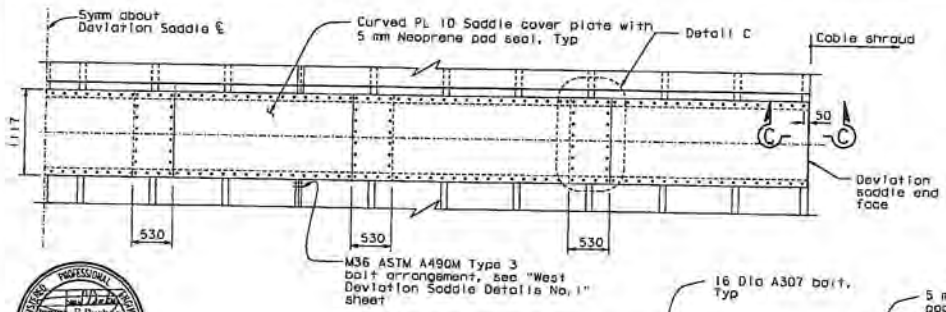

SECTION A-A
1:30

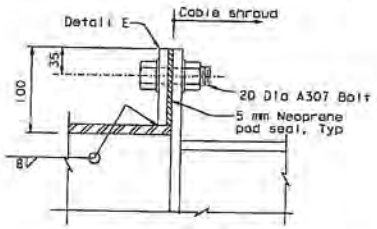

SECTION C-C
1:2.5

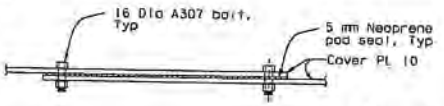

SECTION D-D
1:5

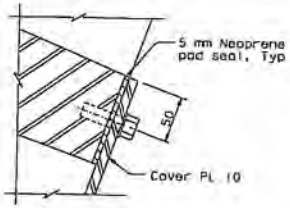

DETAIL D
1:2.5

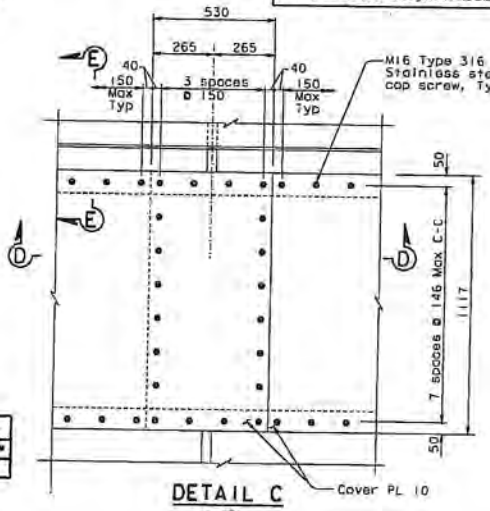

DETAIL C
1:10

FOR REVISIONS ONLY

REGISTERED PROFESSIONAL ENGINEER Jimmy P. Duxbury No. C 64677 Exp. 06/30/07 CIVIL STATE OF CALIFORNIA

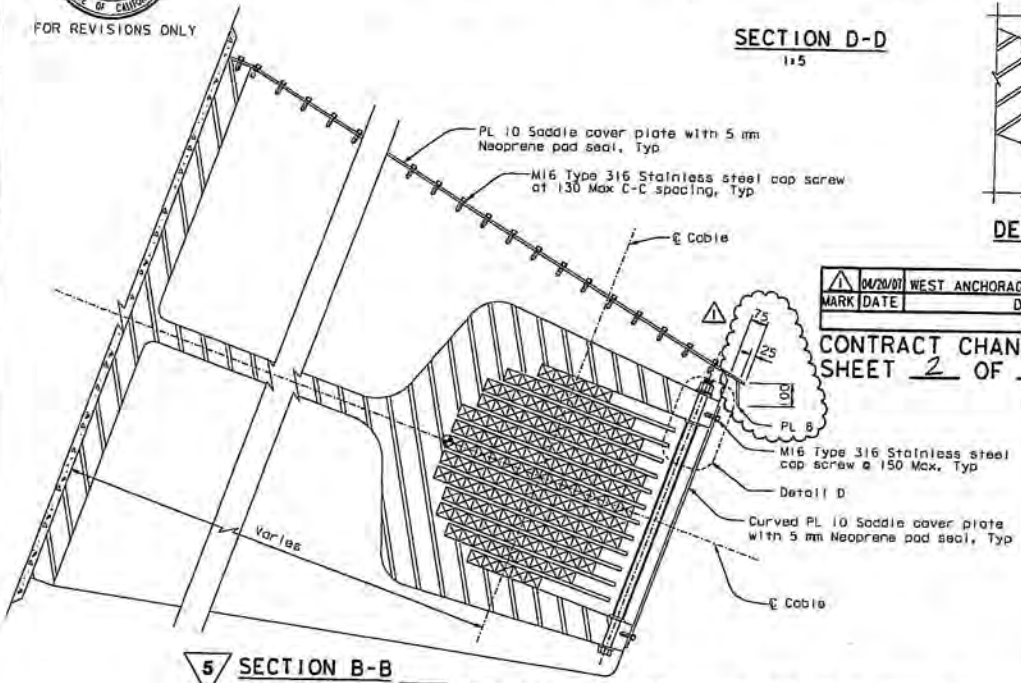

5 SECTION B-B
1:10

MARK	DATE	DESCRIPTIONS	BY	CH'D	CCO#
1	04/20/07	WEST ANCHORAGE ACCESS DETAILS	JD	AS	28

REVISIONS

CONTRACT CHANGE ORDER NO. 28
SHEET 2 OF 9

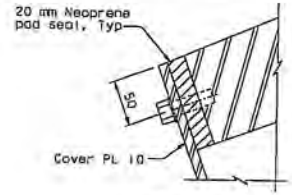

SECTION E-E
1:2.5

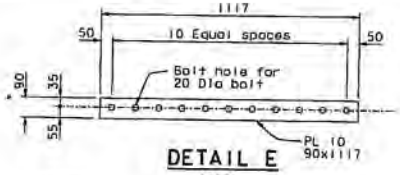

DETAIL E
1:10

NOTES:

1. For additional details, see "West Deviation Saddle Housing Details No. 1" sheet.
2. Apply caulking if necessary to seal the gap between the cover plate and top of saddle through.

5 REVISED PER ADDENDUM NO. 5 DATED DECEMBER 21, 2005

ALL DIMENSIONS ARE IN MILLIMETERS UNLESS OTHERWISE SHOWN

R. Valizadeh/V. Tooi/Y.L./W.L./F.C.
DESIGN OVERSIGHT
Ron Valizadeh / Vazgen Tooi / Y. Lin
STOP OFF DATE 04/20/07
Rev. Date: 5-18-93

DESIGN	BY J. Sun	CHECKED T. McMeans	
DETAILS	BY J. Duxbury	CHECKED T. McMeans	
QUANTITIES	BY J. Duxbury	CHECKED S. Shi	

ORIGINAL SCALE IN MILLIMETERS FOR REDUCED PLANS 0 10 20 30 40 50 60 70 80 90 100

PREPARED FOR THE STATE OF CALIFORNIA DEPARTMENT OF TRANSPORTATION

R. Manzanarez
PROJECT ENGINEER

BRIDGE NO. 34-0006L/R
KILOMETER POST 13.2/13.9
CU 04
EA 0120F1

DISREGARD PRINTS BEARING EARLIER REVISION DATES

SAN FRANCISCO OAKLAND BAY BRIDGE
EAST SPAN SEISMIC SAFETY PROJECT
SELF-ANCHORED SUSPENSION BRIDGE
(SUPERSTRUCTURE & TOWER)

WEST DEVIATION SADDLE HOUSING DETAILS NO. 2

REVISION DATES (PRELIMINARY STAGE ONLY)

SHEET 375R1 OF

FILE => I:\bb\04-012001\sas\contract plans and cos\ccos\in progress\cco#28\ccp2n002.dgn

USERNAME => V:\projects\SFE PLOTTED => 19 APR 2007 TIME PLOTTED => 15:28:19

100 % PSAE

DIST.	COUNTY	ROUTE	KILOMETER POST TOTAL PROJECT	SHEET NO.	TOTAL SHEETS
04	SF	80	13.2/13.9	793R1	1204

REGISTERED ENGINEER - CIVIL
12-6-04
PLANS APPROVAL DATE
The State of California or its officers or agents shall not be responsible for the accuracy or completeness of electronic copies of this plan sheet.

REGISTERED PROFESSIONAL ENGINEER John Sun No. C 54648 Exp. 12/31/05 CIVIL STATE OF CALIFORNIA

T.Y. LIN / MOFFATT & NICHOL
825 BATTERY STREET
SAN FRANCISCO, CA 94111

Caltrans now has a web site! To get to the web site, go to http://www.dot.ca.gov

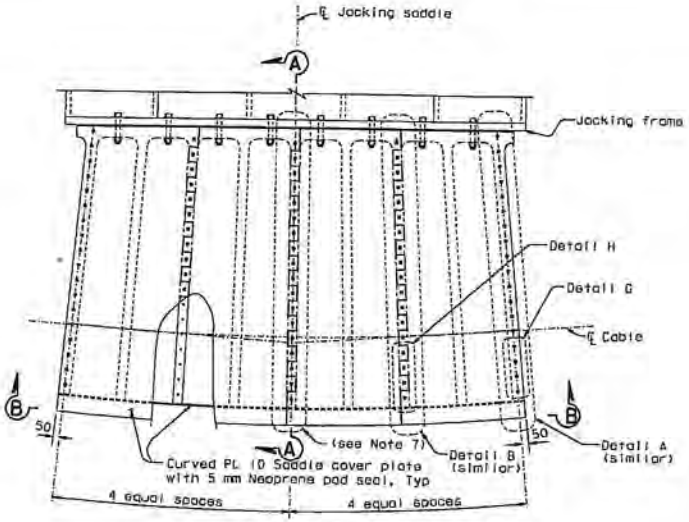

PLAN VIEW (in the plan of the Jacking Saddle)
1:20

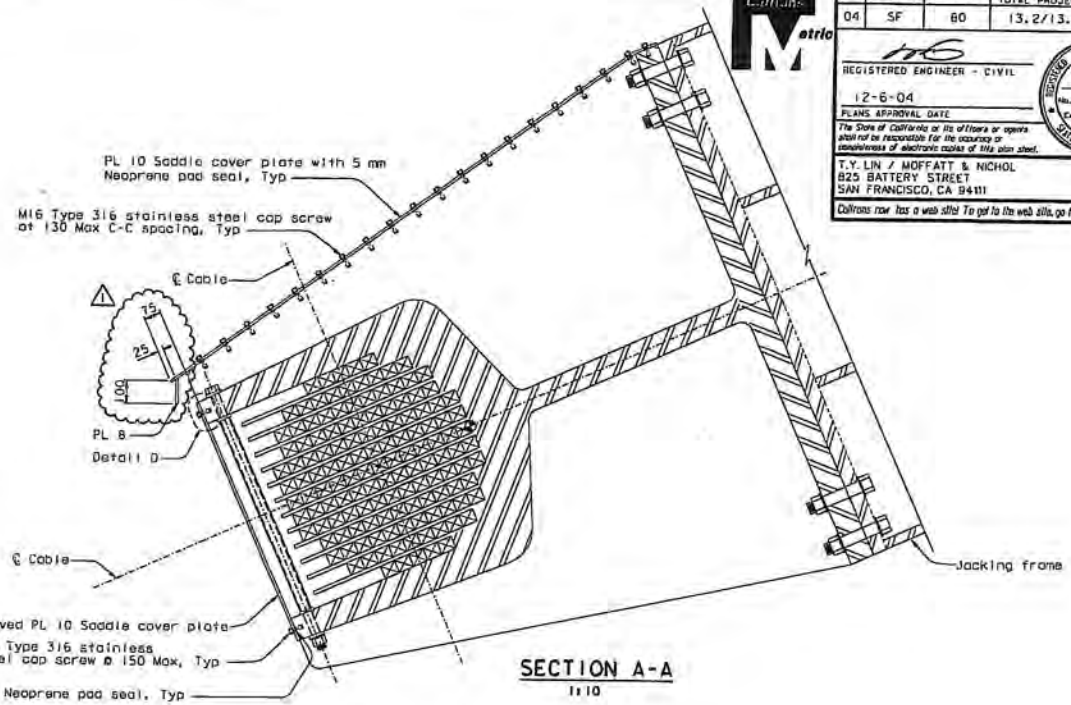

SECTION A-A
1:10

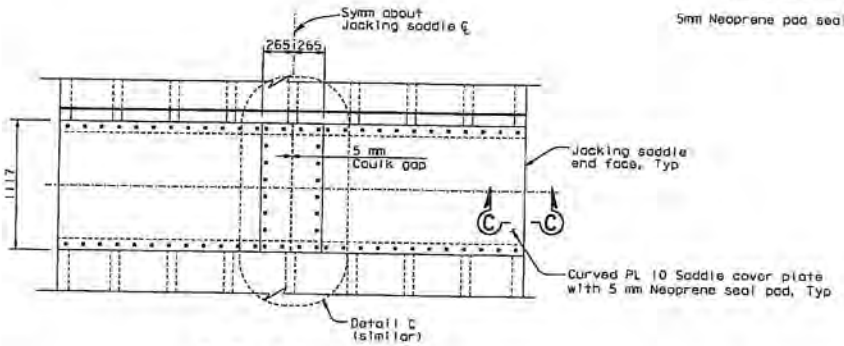

ELEVATION B-B
1:20

REGISTERED PROFESSIONAL ENGINEER R. Duxbury No. C 64677 Exp. 06/30/07 CIVIL STATE OF CALIFORNIA

FOR REVISIONS ONLY

MARK	DATE	DESCRIPTIONS	BY	CH'D	CCO#
1	04/20/07	WEST ANCHORAGE ACCESS DETAILS	JD	AS	28

REVISIONS

CONTRACT CHANGE ORDER NO. 28
SHEET 3 OF 9

NOTES:

1. For additional details, see "West Jacking Saddle Details" sheets.
2. For Jacking frame details, see "West Jacking Frame Details" sheets.
3. For Details A and B, see "West Deviation Saddle Housing Details No. 1" sheet.
4. For Section C-C and Details C and D, see "West Deviation Saddle Housing Details No. 2" sheet.
5. All plate shall be ASTM A709M Grade 345, unless specified otherwise.
6. For Details H and G, see "West Anchorage Access Details No. 4" sheet.
7. If the Contractor elects to use the West Jacking Saddle Splice Alternate, the Joint between the saddle cover plates shall be removed.

100 % PS&E

ALL DIMENSIONS ARE IN MILLIMETERS UNLESS OTHERWISE SHOWN

R. Vafizadeh/V. Toan/Y.L./W.L./F.C.
DESIGN OVERSIGHT
Roy Vafizadeh / Vinh Toan / Y. Liu
STGN SPV DATE 04/20/07

DESIGN	BY J. Sun	CHECKED T. McMeans	
DETAILS	BY J. Duxbury	CHECKED T. McMeans	
QUANTITIES	BY J. Duxbury	CHECKED S. Shi	

PREPARED FOR THE STATE OF CALIFORNIA DEPARTMENT OF TRANSPORTATION

R. Monzonarez
PROJECT ENGINEER

BRIDGE NO. 34-0006L/R
KILOMETER POST 13.2/13.9
CU 04
EA 0120F1

SAN FRANCISCO OAKLAND BAY BRIDGE
EAST SPAN SEISMIC SAFETY PROJECT
SELF-ANCHORED SUSPENSION BRIDGE
(SUPERSTRUCTURE & TOWER)

WEST JACKING SADDLE HOUSING DETAILS

DISREGARD PRINTS BEARING EARLIER REVISION DATES

REVISION DATES (PRELIMINARY STAGE ONLY) 10/09/06 11/09/06 01/09/06 12/15/06

SHEET 376R1

ORIGINAL SCALE IN MILLIMETERS FOR REDUCED PLANS 0 10 20 30 40 50 60 70 80 90 100

FILE => ...\00\04-0120F1\aas\contract plans and ccos\cos\in progress\cco-28\aaq6ra02a.dgn

USERNAME => vignotsv@PTE PLOTTED => 19 APR 2007 TIME PLOTTED => 13:29:00

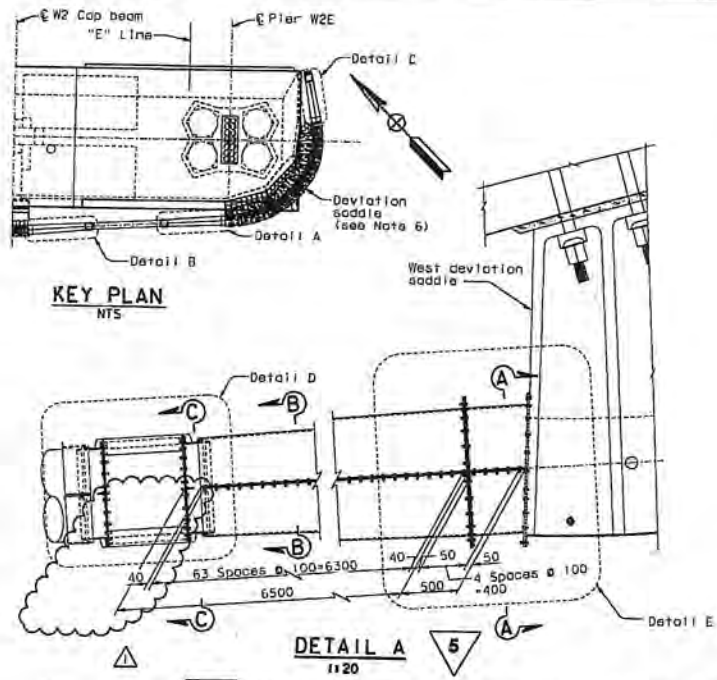

KEY PLAN
NTS

DETAIL A
1:20

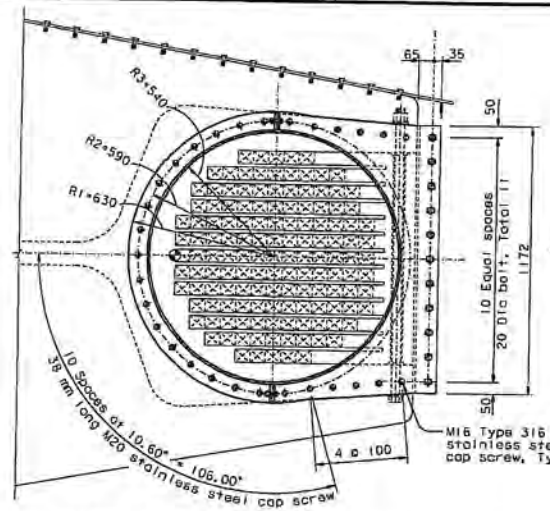

SECTION A-A (Project to deviation saddle face)
1:10

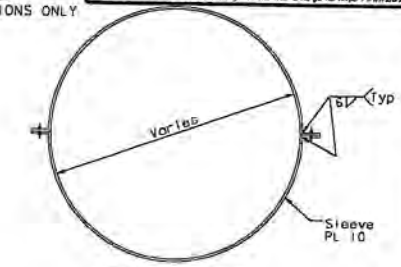

SECTION B-B
1:10

MARK	DATE	DESCRIPTIONS	BY	CH'D	CCO#
1	04/20/07	WEST ANCHORAGE ACCESS DETAILS	JD	AS	28
		REVISIONS			

CONTRACT CHANGE ORDER NO. 28
SHEET 4 OF 9

5 REVISED PER ADDENDUM NO. 5 DATED DECEMBER 21, 2005

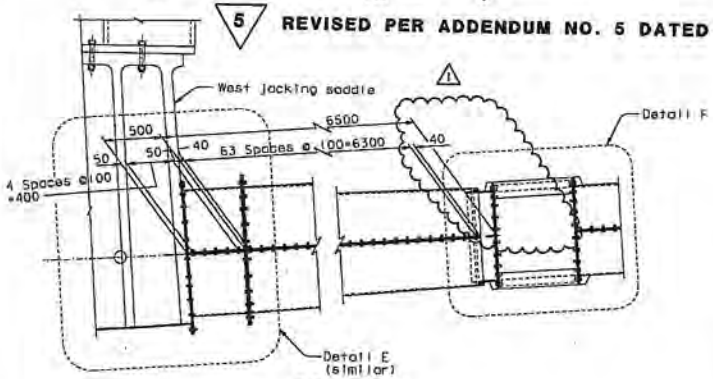

DETAIL B
1:20

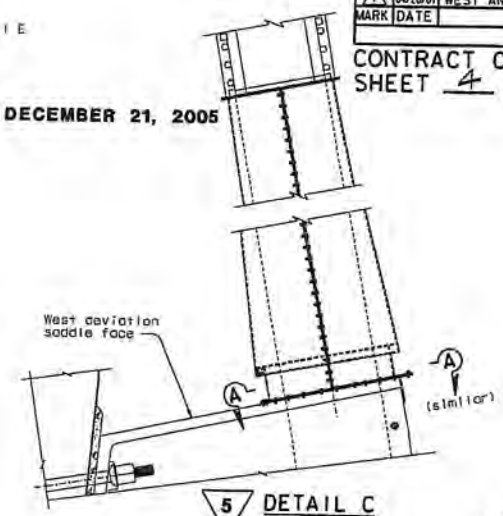

5 DETAIL C
1:20

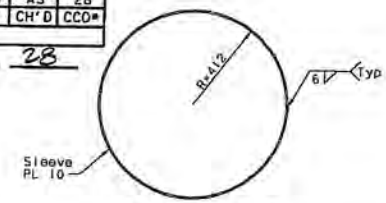

SECTION C-C
1:10

NOTES:

1. For Details D through F, see "West Cable Shroud Details No. 2" sheet.
2. All details, except the key plan, are presented in the plan of looping anchorage cable.
3. For Detail C, see "Tower Cable Shroud Details" sheet.
4. West cable shroud details shown are "E" Line, "W" Line similar.
5. All plate shall be ASTM A709M Grade 345, unless specified otherwise.
6. Views of the deviation saddle are for illustration only. For deviation saddle details, see "West Deviation Saddle Details" sheets.

ALL DIMENSIONS ARE IN MILLIMETERS UNLESS OTHERWISE SHOWN

DIST.	COUNTY	ROUTE	KILOMETER POST TOTAL PROJECT	SHEET NO.	TOTAL SHEETS
04	SF	80	13.2/13.9	807R1	1204

REGISTERED ENGINEER - CIVIL
12-6-04
PLANS APPROVAL DATE
The State of California or its officers or agents shall not be responsible for the accuracy or completeness of electronic copies of this plan sheet.

REGISTERED PROFESSIONAL ENGINEER John Sun No. C 54648 Exp. 12/31/05 CIVIL STATE OF CALIFORNIA

T.Y. LIN / MOFFATT & NICHOL
825 BATTERY STREET
SAN FRANCISCO, CA 94111
Caltrans now has a web site! To get to the web site, go to: http://www.dot.ca.gov

Caltrans Metric

REGISTERED PROFESSIONAL ENGINEER Jimmy P. Duxbury No. C 64677 Exp. 06/30/07 CIVIL STATE OF CALIFORNIA

FOR REVISIONS ONLY

100 % PS&E

R. Valizadeh/V. Toan/Y.L./W.L./F.C.
DESIGN OVERSIGHT
Roger Valizadeh / Vong Toan / Y. Liu
STOP OFF DATE 04/30/07
Rev. Date: 5-13-98

DESIGN	BY J. Sun	CHECKED	T. McMeans
DETAILS	BY J. Duxbury	CHECKED	T. McMeans
QUANTITIES	BY S. Shi	CHECKED	D. Harrison

ORIGINAL SCALE IN MILLIMETERS FOR REDUCED PLANS 0 10 20 30 40 50 60 70 80 90 100

PREPARED FOR THE STATE OF CALIFORNIA DEPARTMENT OF TRANSPORTATION

R. Manzanarez
PROJECT ENGINEER

BRIDGE NO. 34-0006L/R
KILOMETER POST 13.2/13.9

CU 04
EA 0120F1

SAN FRANCISCO OAKLAND BAY BRIDGE
EAST SPAN SEISMIC SAFETY PROJECT
SELF-ANCHORED SUSPENSION BRIDGE
(SUPERSTRUCTURE & TOWER)

WEST CABLE SHROUD DETAILS NO. 1

DISREGARD PRINTS BEARING EARLIER REVISION DATES
REVISION DATES (PRELIMINARY STAGE ONLY)
SHEET 390R1 OF

FILE -> I:\sb\04-012001\sas\contract plans and cco\cco\in progress\cco#28\cogshr01.dgn

USERNAME -> signatovedDATE PLOTTED -> 19 APR 2007 TIME PLOTTED -> 15:29:47

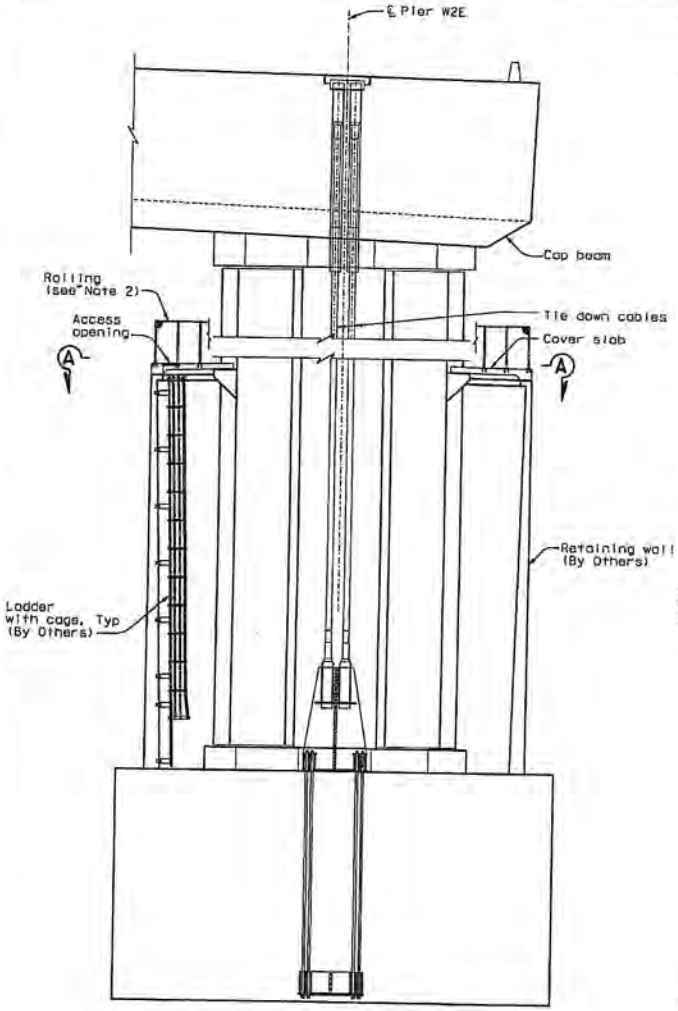

ELEVATION
1:100

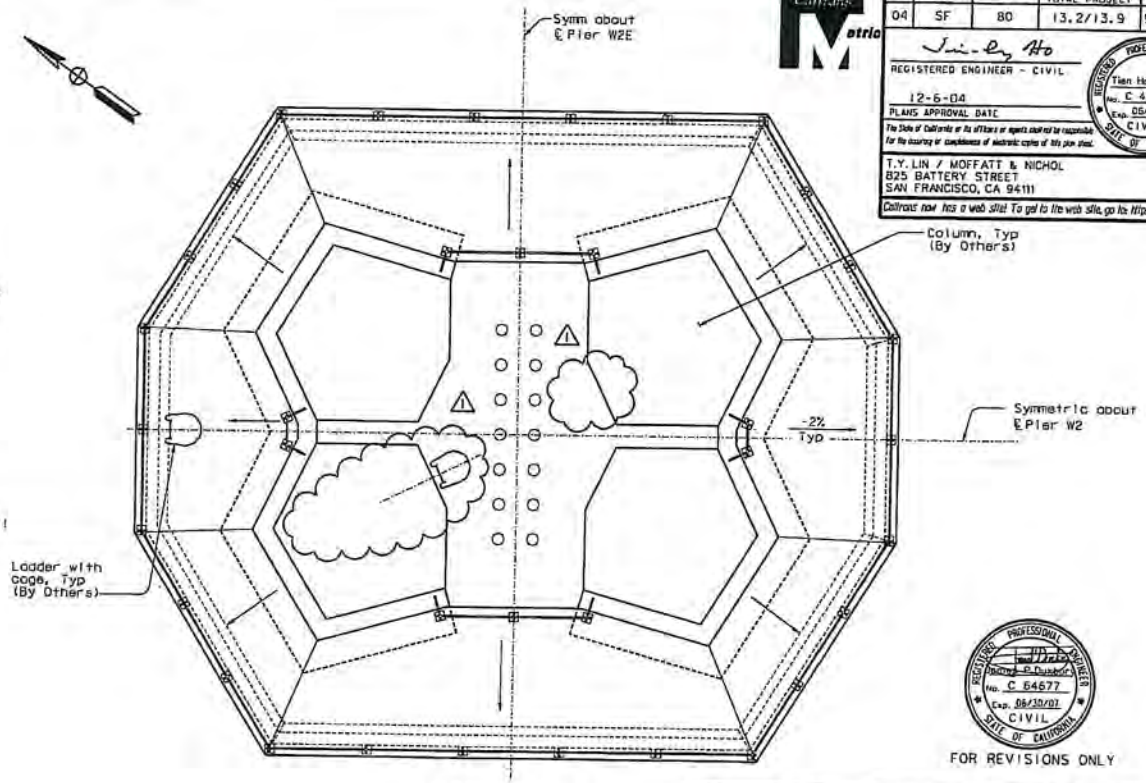

SECTION A-A
1:50

DIST.	COUNTY	ROUTE	KILOMETER POST TOTAL PROJECT	SHEET NO.	TOTAL SHEETS
04	SF	80	13.2/13.9	909R1	1204

REGISTERED ENGINEER - CIVIL
12-6-04
PLANS APPROVAL DATE

REGISTERED PROFESSIONAL ENGINEER Tien Hung Ho No. C 43990 Exp. 06/03/05 CIVIL STATE OF CALIFORNIA

The State of California or its officers or agents shall not be responsible for the accuracy or completeness of electronic copies of this plan sheet.

T.Y. LIN / MOFFATT & NICHOL
825 BATTERY STREET
SAN FRANCISCO, CA 94111

Caltrans now has a web site! To get to the web site, go to: http://www.dot.ca.gov

REGISTERED PROFESSIONAL ENGINEER Richard D. Duxbury No. C 64677 Exp. 06/30/07 CIVIL STATE OF CALIFORNIA

FOR REVISIONS ONLY

MARK	DATE	DESCRIPTIONS	BY	CH'D	CCO#
1	04/20/07	WEST ANCHORAGE ACCESS DETAILS	JD	AS	28

REVISIONS

CONTRACT CHANGE ORDER NO. 28
SHEET 5 OF 9

NOTES

1. For cover slab details, see "Pier W2 Details" sheets.
2. For rolling, see "Pier W2 Details No. 6" sheet.
3. Pier W2E access details shown, access details for Pier W2W similar.

3 REVISED PER ADDENDUM NO. 3 DATED NOVEMBER 7, 2005

ALL DIMENSIONS ARE IN MILLIMETERS UNLESS OTHERWISE SHOWN

DESIGN	BY T. Ho	CHECKED N. Vo	
DETAILS	BY J. Duxbury	CHECKED N. Vo	
QUANTITIES	BY S. Shi	CHECKED J. Levantini	

R. Valizadeh/V. Toon/Y.L./W.L./F.C.
DESIGN OVERSIGHT
SIGN OFF DATE 04/20/07
Rev. Date: 5-18-05

PREPARED FOR THE STATE OF CALIFORNIA DEPARTMENT OF TRANSPORTATION

R. Manzanarez
PROJECT ENGINEER

BRIDGE NO. 34-0006L/R
KILOMETER POST 13.2/13.9
CU 04
EA 0120F1

SAN FRANCISCO OAKLAND BAY BRIDGE
EAST SPAN SEISMIC SAFETY PROJECT
SELF-ANCHORED SUSPENSION BRIDGE
(SUPERSTRUCTURE & TOWER)

PIER W2 ACCESS DETAILS NO. 1

ORIGINAL SCALE IN MILLIMETERS FOR REDUCED PLANS 0 10 20 30 40 50 60 70 80 90 100

DISREGARD PRINTS BEARING EARLIER REVISION DATES

REVISION DATES (PRELIMINARY STAGE ONLY) 05/07/05 05/09/05 05/09/05 05/09/05 05/09/05 05/13/05

SHEET OF 492R1

FILE => I:\bb\04-0120f1\ccs\contract plans and ccs\ccs\in progress\cco#28\bxdccd1.dgn

USERNAME => v10pw1ow DATE PLOTTED => 19 APR 2007 TIME PLOTTED => 15:30:35

100 % PAGE

MARK	DATE	DESCRIPTIONS	BY	CH'D	CCO#
1	04/20/07	WEST ANCHORAGE ACCESS DETAILS	GB	TH	28

REVISIONS

CONTRACT CHANGE ORDER NO. 28
SHEET 6 OF 9

DIST.	COUNTY	ROUTE	KILOMETER POST TOTAL PROJECT	SHEET NO.	TOTAL SHEETS
04	SF	80	13.2/13.9	911R1	1204

REGISTERED ENGINEER - CIVIL
12-6-04
PLANS APPROVAL DATE

REGISTERED PROFESSIONAL ENGINEER
Tian Hung Ho
No. C 43990
Exp. 06/03/07
CIVIL
STATE OF CALIFORNIA

The State of California or its officers or agents shall not be responsible for the accuracy or completeness of electronic copies of this plan sheet.

T.Y. LIN / MOFFATT & NICHOL
825 BATTERY STREET
SAN FRANCISCO, CA 94111

Caltrans now has a web site! To get to the web site, go to: http://www.dot.ca.gov

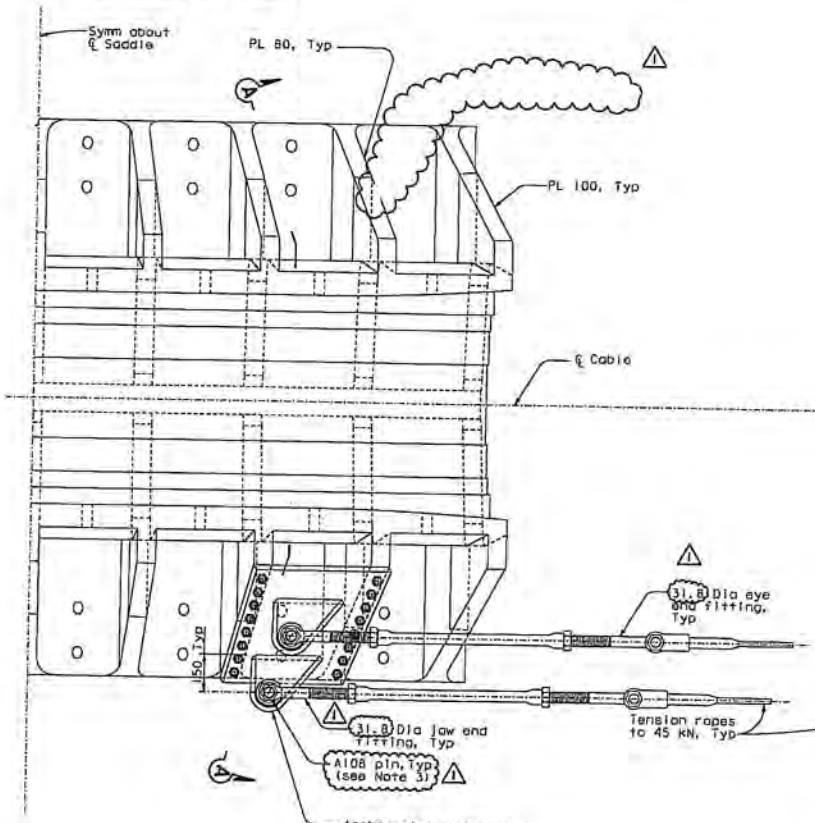

DETAIL A
NTS

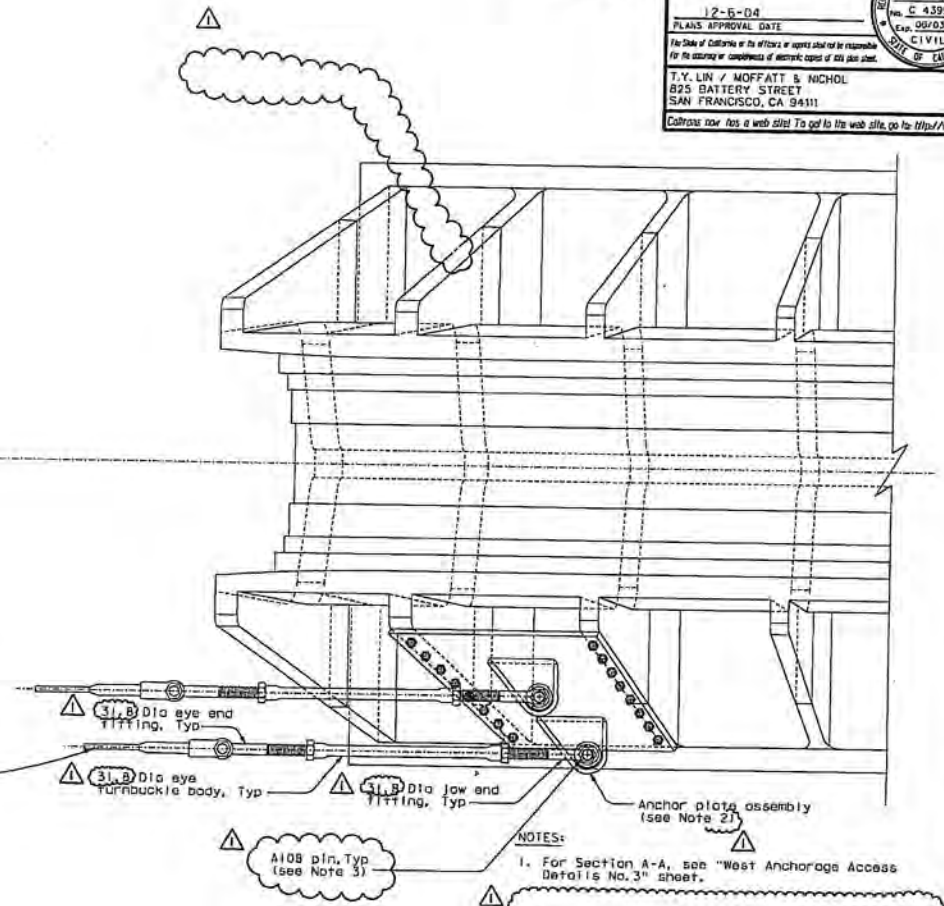

DETAIL B
NTS

NOTES:

1. For Section A-A, see "West Anchorage Access Details No. 3" sheet.
2. For Anchor plate assembly detail, see "West Anchorage Access Details No. 3" sheet.
3. For pin details see "Cable Handrope Details No. 2" sheet.

ALL DIMENSIONS ARE IN MILLIMETERS UNLESS OTHERWISE SHOWN

R. Valizadeh/V. Tsai/Y.L./N.L./F.C.
DESIGN OVERSIGHT
STCH DPT DATE 04/20/07
Rev. Date: 2-15-98

DESIGN	BY T. Ho	CHECKED N. Vo	
DETAILS	BY J. Sun	CHECKED N. Vo	
QUANTITIES	BY T. Ho	CHECKED N. Vo	

ORIGINAL SCALE IN MILLIMETERS FOR REDUCED PLANS 0 10 20 30 40 50 60 70 80 90 100

PREPARED FOR THE
STATE OF CALIFORNIA
DEPARTMENT OF TRANSPORTATION

R. Manzanarez
PROJECT ENGINEER

CU 04
EA 0120F1

BRIDGE NO. 34-0006L/R
KILOMETER POST 13.2/13.9

DISREGARD PRINTS BEARING EARLIER REVISION DATES

FILE => I:\bb\04-012001\ccs\contract plans and ccos\ccos\in progress\cco#28\bbaccd02d.dgn

SAN FRANCISCO OAKLAND BAY BRIDGE
EAST SPAN SEISMIC SAFETY PROJECT
SELF-ANCHORED SUSPENSION BRIDGE
(SUPERSTRUCTURE & TOWER)

WEST ANCHORAGE ACCESS DETAILS NO. 2

REVISION DATES (PRELIMINARY STAGE ONLY)												SHEET	OF
BLUEPRINT	BLUELINE	MAGNETIC	RECORDS	STORAGE	MICROFILM							494R1	

USERNAME => v:\signature\ TIME PLOTTED => 15:31:21 DATE PLOTTED => 19 APR 2007

100 % PS&E

DIST	COUNTY	ROUTE	KILOMETER POST TOTAL PROJECT	SHEET NO.	TOTAL SHEETS
04	SF	80	13.2/13.9	912R1	1204

REGISTERED ENGINEER - CIVIL

12-6-04
PLANS APPROVAL DATE

REGISTERED PROFESSIONAL ENGINEER Tien Hung Ho No. C 43990 Exp. 05/03/07 CIVIL STATE OF CALIFORNIA

The State of California or its officers or agents shall not be responsible for the accuracy or completeness of electronic copies of this plan sheet.

T.Y. LIN / MOFFATT & NICHOL
825 BATTERY STREET
SAN FRANCISCO, CA 94111

Caltrans now has a web site! To get to the web site, go to: http://www.dot.ca.gov

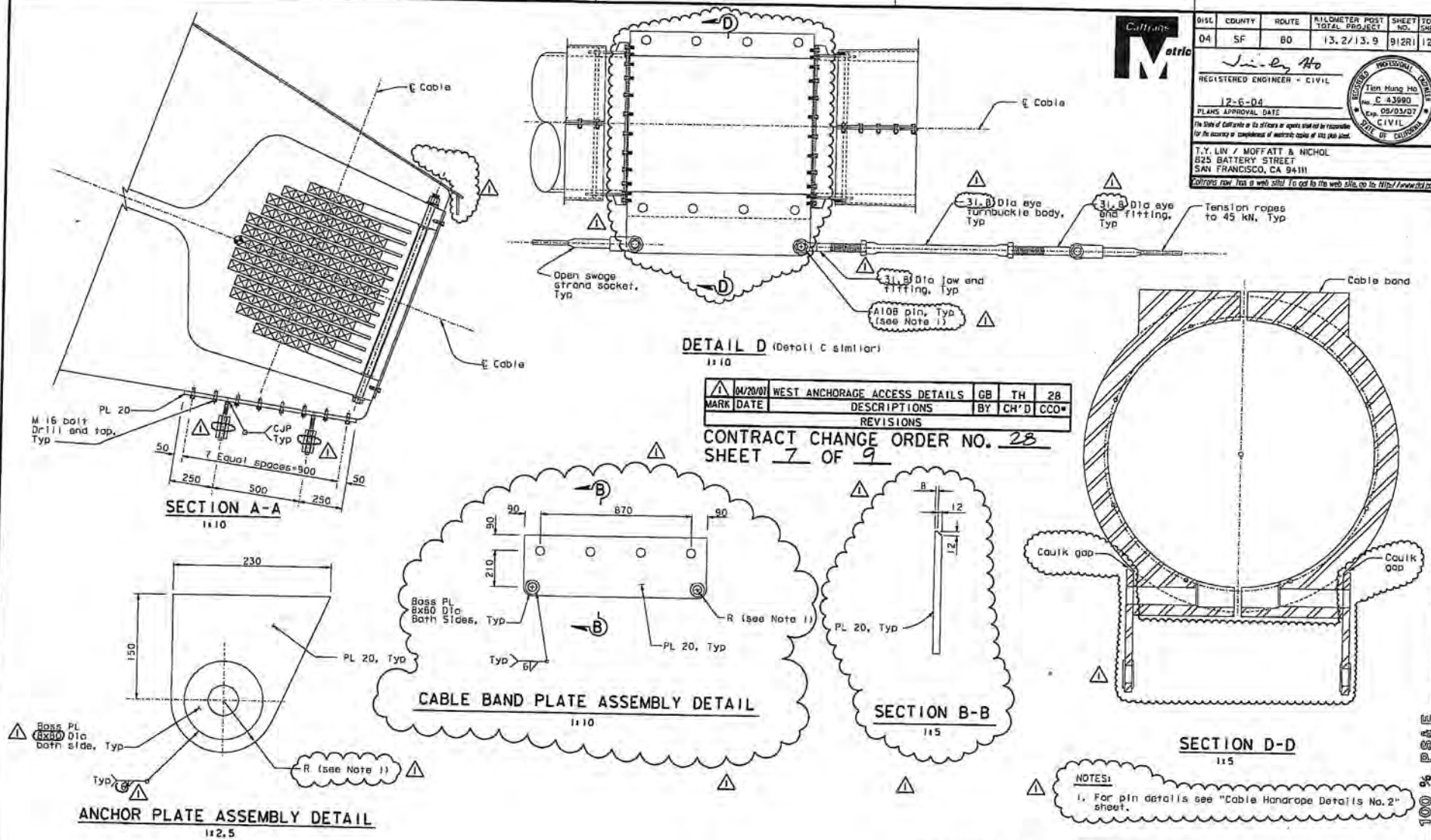

MARK	DATE	DESCRIPTIONS	BY	CH'D	CCO#
1	04/20/07	WEST ANCHORAGE ACCESS DETAILS	GB	TH	28

REVISIONS

CONTRACT CHANGE ORDER NO. 28
SHEET 7 OF 9

NOTES:
1. For pin details see "Cable Handrope Details No. 2" sheet.

ALL DIMENSIONS ARE IN MILLIMETERS UNLESS OTHERWISE SHOWN

R. Volizoden/V. Toon/Y.L./N.L./F.C.
DESIGN OVERSIGHT
Roya Volizoden / Vong Toon / Y. Liu
SIGN OFF DATE 04/20/07
Rev. Date: 3-18-08

DESIGN	BY T. Ho	CHECKED N. Vo	
DETAILS	BY J. Sun	CHECKED N. Vo	
QUANTITIES	BY T. Ho	CHECKED N. Vo	

ORIGINAL SCALE IN MILLIMETERS FOR REDUCED PLANS 0 10 20 30 40 50 60 70 80 90 100

PREPARED FOR THE STATE OF CALIFORNIA DEPARTMENT OF TRANSPORTATION

R. Manzanarez
PROJECT ENGINEER

BRIDGE NO. 34-0006L/R
KILOMETER POST 13.2/13.9
CU 04
EA 0120F1

SAN FRANCISCO OAKLAND BAY BRIDGE
EAST SPAN SEISMIC SAFETY PROJECT
SELF-ANCHORED SUSPENSION BRIDGE
(SUPERSTRUCTURE & TOWER)

WEST ANCHORAGE ACCESS DETAILS NO. 3

DISREGARD PRINTS BEARING EARLIER REVISION DATES

REVISION DATES (PRELIMINARY STAGE ONLY)

SHEET 495R1

FILE => L:\80\04-012001\SAS\Contract Plans and CCO\CCO\In Progress\CCO-28\cokacc02a.dgn

USERNAME => V:\projects\SAFE PLOTTED => 19 APR 2007 TIME PLOTTED => 15:26:59

100 % PSAE

DIST.	COUNTY	ROUTE	KILOMETER POST TOTAL PROJECT	SHEET NO.	TOTAL SHEETS
04	SF	80	13.2/13.9	913R2	1204

REGISTERED ENGINEER - CIVIL

12-6-04
PLANS APPROVAL DATE

Tien Hung Ho
No. C 43990
Exp. 06/03/07
CIVIL
STATE OF CALIFORNIA

The State of California or its officers or agents shall not be responsible for the accuracy or completeness of electronic copies of this plan sheet.

T.Y. LIN / MOFFATT & NICHOL
825 BATTERY STREET
SAN FRANCISCO, CA 94111

Caltrans now has a web site! To get to the web site, go to: http://www.dot.ca.gov

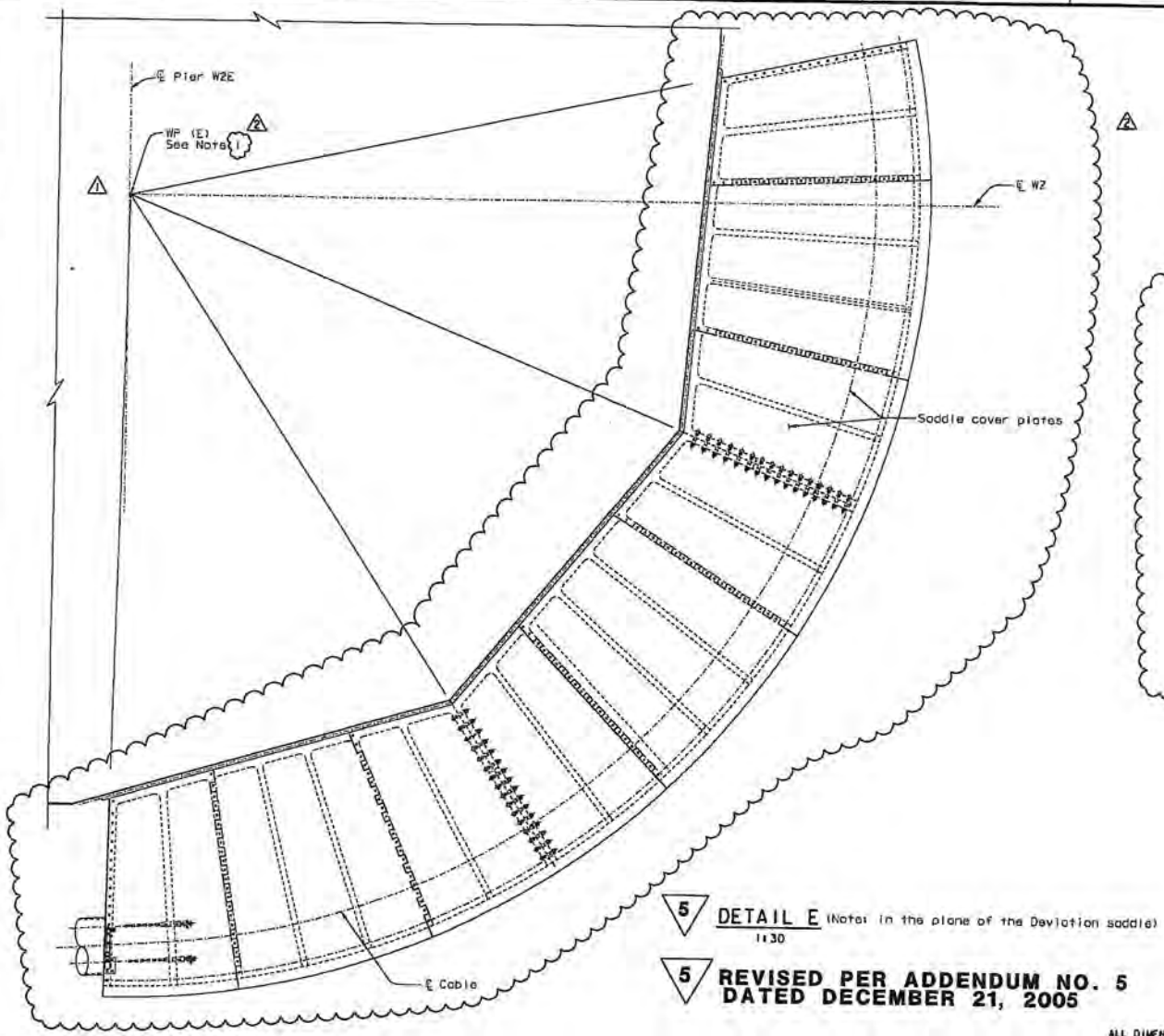

5 DETAIL E (Note: in the plane of the Deviation saddle)
1:30

5 REVISED PER ADDENDUM NO. 5
DATED DECEMBER 21, 2005

MARK	DATE	DESCRIPTIONS	BY	CH'D	CCO#
2	04/20/07	WEST ANCHORAGE ACCESS DETAILS	GB	TH	28
1	01/31/01	WEST DEVIATION SADDLE GEOMETRY	PC	TH	15

REVISIONS

CONTRACT CHANGE ORDER NO. 28
SHEET 8 OF 9

NOTES:

1. WP(E) and WP(W) do not coincide with ℄ of Pier W2, ℄ Pier W2E nor ℄ Pier W2W.

100 % PS&E

ALL DIMENSIONS ARE IN MILLIMETERS UNLESS OTHERWISE SHOWN

R. Valizadeh/V. Tuan/Y.L./W.L./F.C.
DESIGN OVERSIGHT
Ron Valizadeh / Vinod Tuan / Y. Liu
STAN OFF DATE 04/20/07

DESIGN	BY T. Ho	CHECKED N. Va	
DETAILS	BY J. Sun	CHECKED N. Va	
QUANTITIES	BY T. Ho	CHECKED N. Va	

PREPARED FOR THE STATE OF CALIFORNIA DEPARTMENT OF TRANSPORTATION

R. Manzanarez
PROJECT ENGINEER

BRIDGE NO. 34-0006L/R
KILOMETER POST 13.2/13.9
CU 04
EA 0120F1

SAN FRANCISCO OAKLAND BAY BRIDGE
EAST SPAN SEISMIC SAFETY PROJECT
SELF-ANCHORED SUSPENSION BRIDGE
(SUPERSTRUCTURE & TOWER)

WEST ANCHORAGE ACCESS DETAILS NO. 4

DIGITAL PLANS BEARING EARLIER REVISION DATES

REVISION DATES (PRELIMINARY STAGE ONLY)

SHEET 496R2 OF

ORIGINAL SCALE IN MILLIMETERS FOR REDUCED PLANS 0 10 20 30 40 50 60 70 80 90 100

Rev. Date: 3-10-98

FILE -> L:\SB\04-0120F1\S&S\Contract Plans and CCO\CCO in Progress\CCO-28\CCO28C027.dgn

USERNAME -> vigorton+SQATE PLOTTED -> 02 JUL 2007 TIME PLOTTED -> 15:17:29

DIST	COUNTY	ROUTE	KILOMETER POST TOTAL PROJECT	SHEET NO.	TOTAL SHEETS
04	SF	80	13.2/13.9	914R1	1204

REGISTERED ENGINEER - CIVIL

12-6-04
PLANS APPROVAL DATE

REGISTERED PROFESSIONAL ENGINEER
Tien Hung Ho
No. C 43900
Exp. 06/03/07
CIVIL
STATE OF CALIFORNIA

The State of California or its officers or agents shall not be responsible for the accuracy or completeness of electronic copies of this plan sheet.

T.Y. LIN / MOFFATT & NICHOL
825 BATTERY STREET
SAN FRANCISCO, CA 94111

Caltrans now has a web site! To get to the web site, go to: http://www.dot.ca.gov

MARK	DATE	DESCRIPTIONS	BY	CH'D	CCO#
1	04/20/07	WEST ANCHORAGE ACCESS DETAILS	GB	TH	28

REVISIONS

CONTRACT CHANGE ORDER NO. 28
SHEET 9 OF 9

100 % PS&E

TIME PLOTTED => 13:33:23

ALL DIMENSIONS ARE IN MILLIMETERS UNLESS OTHERWISE SHOWN

PREPARED FOR THE STATE OF CALIFORNIA DEPARTMENT OF TRANSPORTATION

R. Monzonarez
PROJECT ENGINEER

BRIDGE NO. 34-0006L/R
KILOMETER POST 12.6/13.9

CU 04
EA 0120F1

SAN FRANCISCO OAKLAND BAY BRIDGE
EAST SPAN SEISMIC SAFETY PROJECT
SELF-ANCHORED SUSPENSION BRIDGE
(SUPERSTRUCTURE & TOWER)

WEST ANCHORAGE ACCESS DETAILS NO. 5

SHEET 497R1 OF

H. Vollzadah/V. Toon/Y.L./W.L./F.C.
DESIGN OVERSIGHT
STON OFF DATE 04/20/07

DESIGN	BY T. Ho	CHECKED	N. Vo
DETAILS	BY J. Sun	CHECKED	N. Vo
QUANTITIES	BY T. Ho	CHECKED	N. Vo

ORIGINAL SCALE IN MILLIMETERS FOR REDUCED PLANS 0 10 20 30 40 50 60 70 80 90 100

DISREGARD PRINTS BEARING EARLIER REVISION DATES

REVISION DATES (PRELIMINARY STAGE ONLY)

FILE => H:\00\04-012001\sos\contract plans and ccos\ccos\in proj\pas\ccos\28\0400cco28.dgn

USERNAME => V\CONTROVERSIE PLOTTED => 19 APR 2007

STATE OF CALIFORNIA - DEPARTMENT OF TRANSPORTATION

CONTRACT CHANGE ORDER MEMORANDUM

DC-CEM-4903 (OLD HC-39 REV. 6/93) CT# 7541-3544-0

DATE: 3/4/2010

TO Pete Siegenthaler, Principal TE	FILE 04-0120F4 04-SF-80-13.2/13.9
FROM Gary Pursell, STE / Richard Morrow, SBE	
CCO NO. 28 / SUPPLEMENT NO. 0 / CATEGORY CODE CHPT	CONTINGENCY BALANCE (including this change) **$8,014,909.40**
$0.00 INCREASE ☐ DECREASE ☐	HEADQUARTERS APPROVAL REQUIRED? YES ☐ NO ☒
SUPPLEMENTAL FUNDS PROVIDED $	IS THIS REQUEST IN ACCORDANCE WITH ENVIRONMENTAL DOCUMENTS? YES ☒ NO ☐
CCO DESCRIPTION: Handrail Mods to West Deviation Saddle Access	**PROJECT DESCRIPTION** CONSTRUCT SELF-ANCHORED SUSPENSION BRIDGE

Original Contract Time	Time Adj.: This Change	Previously Approved CCO Time Adjustments	Percentage Time Adjusted: (including this change)	Total # of Unreconciled Deferred Time CCO(s): (including this change)
2490 Day(s)	**0** Day(s)	**227** Day(s)	**9** %	**6**

THIS CHANGE ORDER PROVIDES FOR:

Deleting the handrail access system along the West Deviation Saddle Access.

During the review of the Contractor submitted Request for Information (RFI) 332, regarding the handrail system at the West Deviation Saddle Access, it was determined that the handrail system called for in the plans was not effective for use by Maintenance forces. Therefore, the handrail access system will be deleted by this change order.

This work is not covered by any contract items. Therefore, payment for this work will be at Adjustment of Compensation at Lump Sum Price for the amount of $150,000.00. Since the cost, of $150,000.00 in this change, is included in Contract Change Order 108 Supplement 1 (CCO 108S1) Claim Settlement Report No. 1 resolution costs, the net payment in this change order is zero.

A determination of the delay in completion of the contract due to work specified by Contract Change Order 28, has been made in CCO 108S1 and is part of the Claims Settlement Report (CSR) No. 1 for this project. Therefore, no adjustment of time is warranted by reason of this change order.

This change order received concurrence from Gary Pursell (Resident Engineer), Rick Morrow (Sup. Structure Rep), Peter Siegenthaler (Principal TE), Rich Foley (HQ Oversight), Ken Terpstra (Project Manager), Richard Land (Chief Engineer), Jon Tapping (HQ Coordinator), Tony Anziano (Toll Bridge Program Manager), Brian Maroney (Project Engineer), Wenyi Long (Design Oversight), and Lina Ellis (Structure Maintenance).

Claims Settlement Report (CSR) No. 1 for this project revises the authority to "Issue and Approve" the changes listed in CCO 108S1 Appendices A & B. The authority to "Issue and Approve" the changes listed in Appendices A & B for the values of time and money contemplated therein has been delegated to the District for approval and approval of each of these change orders by the Headquarters CCO Desk will not be required. Since this change order is included in CCO 108S1 no Headquarters CCO Desk "Issue and Approve" is required, a copy of CCO 108S1 is attached for reference.

CONCURRED BY:		
CONSTRUCTION ENGINEER Res. Eng. Gary Pursell	DATE 12/21/09	
SR. BRIDGE ENGINEER Rick Morrow	DATE 12/21/09	
FHWA REPRESENTATIVE	DATE	
PROJECT MANAGER Proj. Manager, Ken Terpstra	DATE 12/21/09	
OTHER (SPECIFY) Chief Engineer, Richard Land	DATE 12/21/09	
PCE, Peter Siegenthaler, Prin TE	DATE 12/21/09	
DISTRICT PRIOR APPROVAL BY	DATE	
HQ (ISSUE & APPROVE) (TO PROCEED) BY Bob Molera (ISSUE & APPROVE)	DATE 12/31/09	
RESIDENT ENGINEER SIGNATURE Gary Pursell	DATE 3/11/10	

ESTIMATE OF COST

	THIS REQUEST	TOTAL TO DATE
ITEMS	$0.00	$0.00
FORCE ACCOUNT	$0.00	$0.00
AGREED PRICE	$0.00	$0.00
ADJUSTMENT	$0.00	$0.00
TOTAL	$0.00	$0.00

FEDERAL PARTICIPATION

☐ PARTICIPATING ☐ PARTICIPATING IN PART ☒ NONE
☐ NON-PARTICIPATING (MAINTENANCE) ☐ NON-PARTICIPATING

FEDERAL SEGREGATION (IF MORE THAN ONE FUNDING SOURCE OR P.I.P. TYPE)
☐ CCO FUNDED PER CONTRACT ☐ CCO FUNDED AS FOLLOWS

FEDERAL FUNDING SOURCE	PERCENT

DIST.	COUNTY	ROUTE	KILOMETER POST TOTAL PROJECT	SHEET NO.	TOTAL SHEETS
04	SF	80	13.2/13.9	792R1	1204

Caltrans Metric

REGISTERED ENGINEER - CIVIL

12-6-04
PLANS APPROVAL DATE

REGISTERED PROFESSIONAL ENGINEER John Sun No. C 54648 Exp. 12/31/05 CIVIL STATE OF CALIFORNIA

The State of California or its officers or agents shall not be responsible for the accuracy or completeness of electronic copies of this plan sheet.

T.Y. LIN / MOFFATT & NICHOL
825 BATTERY STREET
SAN FRANCISCO, CA 94111

Caltrans now has a web site! To get to the web site, go to: http://www.dot.ca.gov

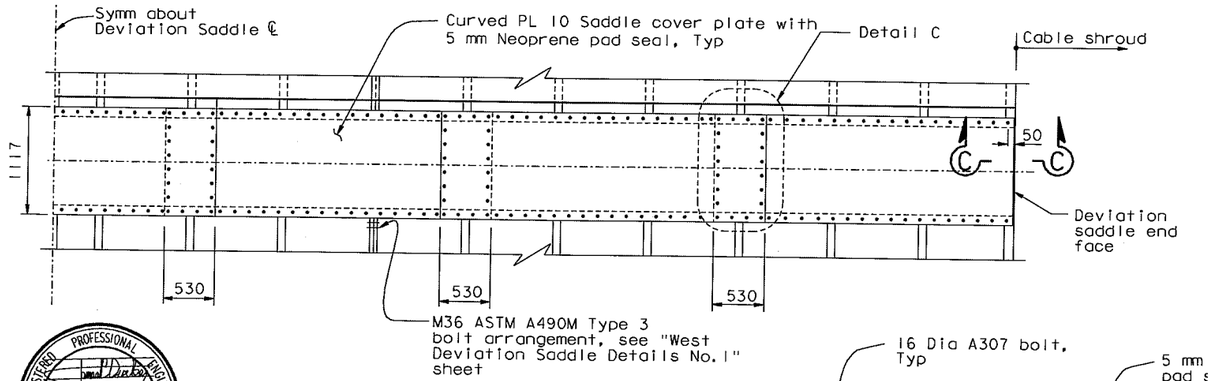

SECTION A-A
1:30

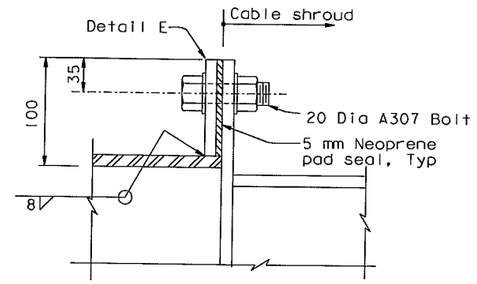

SECTION C-C
1:2.5

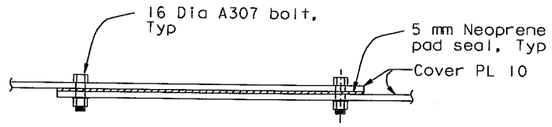

SECTION D-D
1:5

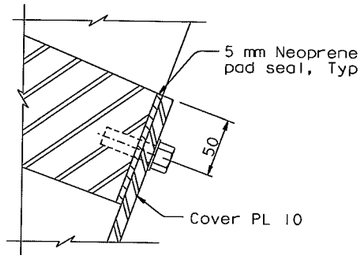

DETAIL D
1:2.5

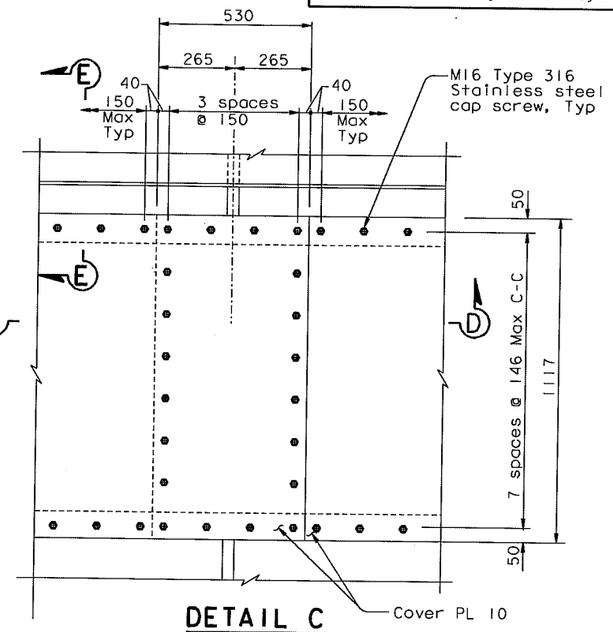

DETAIL C
1:10

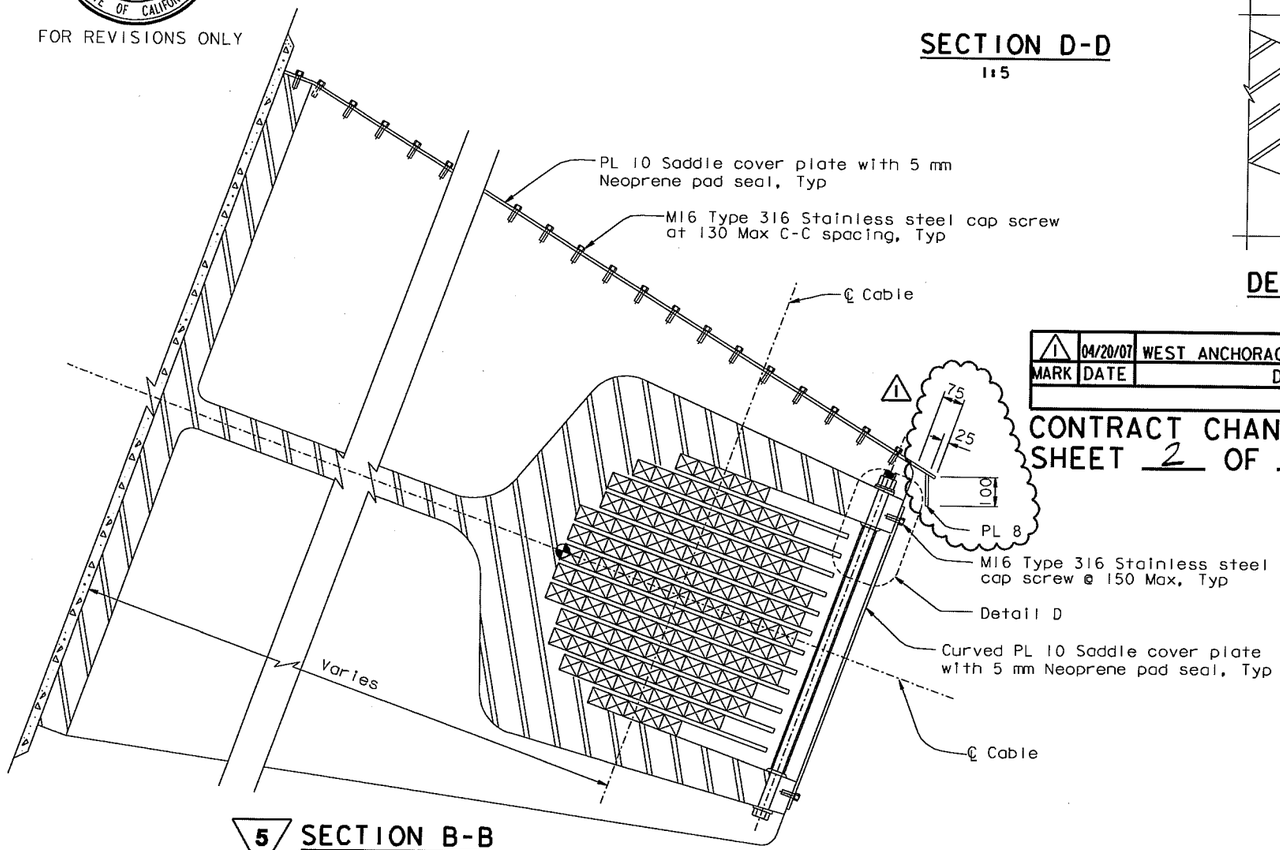

5 SECTION B-B
1:10

MARK	DATE	DESCRIPTIONS	BY	CH'D	CCO#
1	04/20/07	WEST ANCHORAGE ACCESS DETAILS	JD	AS	28
		REVISIONS			

CONTRACT CHANGE ORDER NO. 28
SHEET 2 OF 9

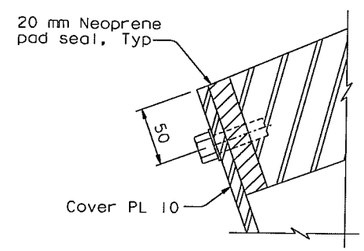

SECTION E-E
1:2.5

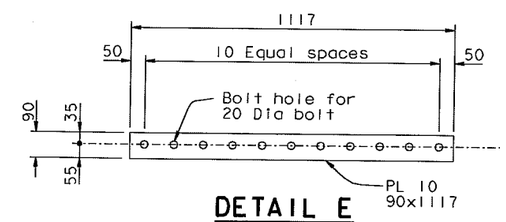

DETAIL E
1:10

NOTES:

1. For additional details, see "West Deviation Saddle Housing Details No. 1" sheet.
2. Apply caulking if necessary to seal the gap between the cover plate and top of saddle through.

FOR REVISIONS ONLY

REGISTERED PROFESSIONAL ENGINEER James P. Duxbury No. C 64677 Exp. 06/30/07 CIVIL STATE OF CALIFORNIA

5 REVISED PER ADDENDUM NO. 5 DATED DECEMBER 21, 2005

ALL DIMENSIONS ARE IN MILLIMETERS UNLESS OTHERWISE SHOWN

R. Valizadeh/V. Toan/Y.L./W.L./F.C.
DESIGN OVERSIGHT
SIGN OFF DATE 04/20/07

	BY	CHECKED
DESIGN	J. Sun	T. McMeans
DETAILS	J. Duxbury	T. McMeans
QUANTITIES	J. Duxbury	S. Shi

PREPARED FOR THE STATE OF CALIFORNIA DEPARTMENT OF TRANSPORTATION

R. Manzanarez
PROJECT ENGINEER

BRIDGE NO. 34-0006L/R
KILOMETER POST 13.2/13.9

SAN FRANCISCO OAKLAND BAY BRIDGE
EAST SPAN SEISMIC SAFETY PROJECT
SELF-ANCHORED SUSPENSION BRIDGE
(SUPERSTRUCTURE & TOWER)

WEST DEVIATION SADDLE HOUSING DETAILS NO. 2

Rev. Date: 5-18-98

ORIGINAL SCALE IN MILLIMETERS FOR REDUCED PLANS 0 10 20 30 40 50 60 70 80 90 100

CU 04
EA 0120F1

DISREGARD PRINTS BEARING EARLIER REVISION DATES

REVISION DATES (PRELIMINARY STAGE ONLY) 05/15/98 08/20/99 05/31/01 04/08/02 07/31/02 12/19/02 09/08/04 12/07/05

SHEET 375R1 OF

FILE => I:\bb\04-01200I\sas\contract plans and cco\cco\in progress\cco#28\cagshd02.dgn

100% PS&E

USERNAME => vignarovs DATE PLOTTED => 19 APR 2007 TIME PLOTTED => 15:28:19

DIST.	COUNTY	ROUTE	KILOMETER POST TOTAL PROJECT	SHEET NO.	TOTAL SHEETS
04	SF	80	13.2/13.9	793R1	1204

REGISTERED ENGINEER - CIVIL

12-6-04

PLANS APPROVAL DATE

REGISTERED PROFESSIONAL ENGINEER John Sun No. C 54648 Exp. 12/31/05 CIVIL STATE OF CALIFORNIA

The State of California or its officers or agents shall not be responsible for the accuracy or completeness of electronic copies of this plan sheet.

T.Y. LIN / MOFFATT & NICHOL
825 BATTERY STREET
SAN FRANCISCO, CA 94111

Caltrans now has a web site! To get to the web site, go to: http://www.dot.ca.gov

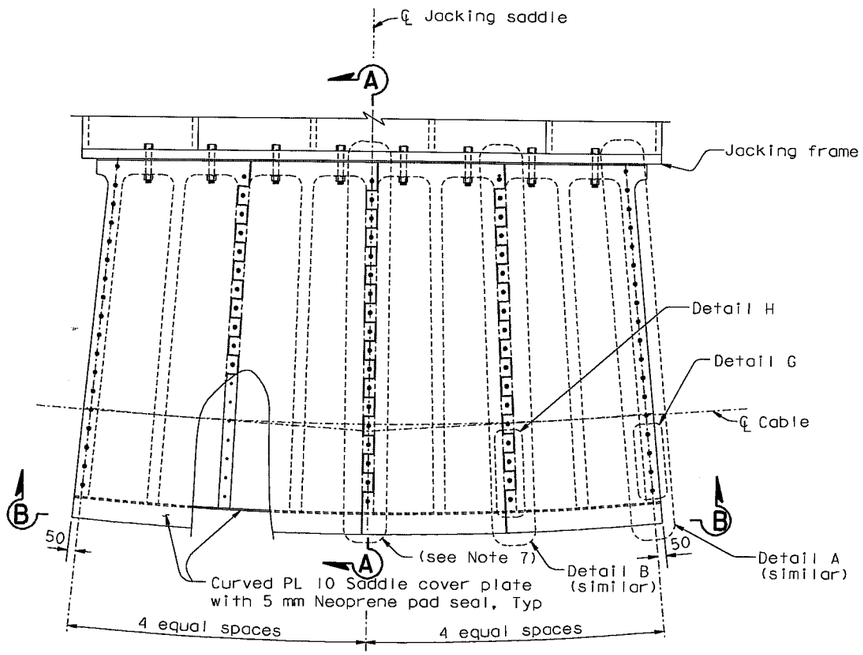

PLAN VIEW (In the plan of the Jacking Saddle)
1:20

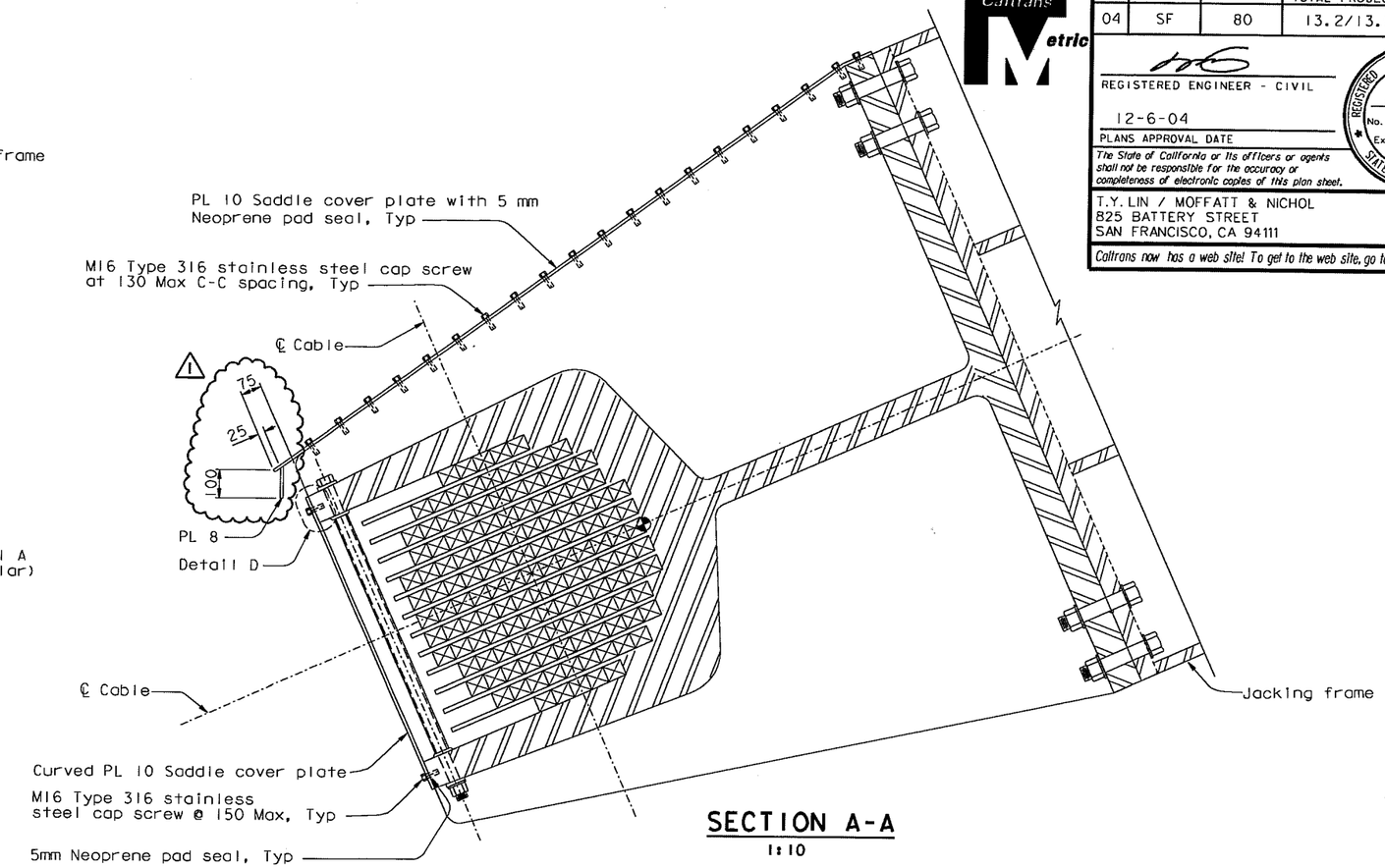

SECTION A-A
1:10

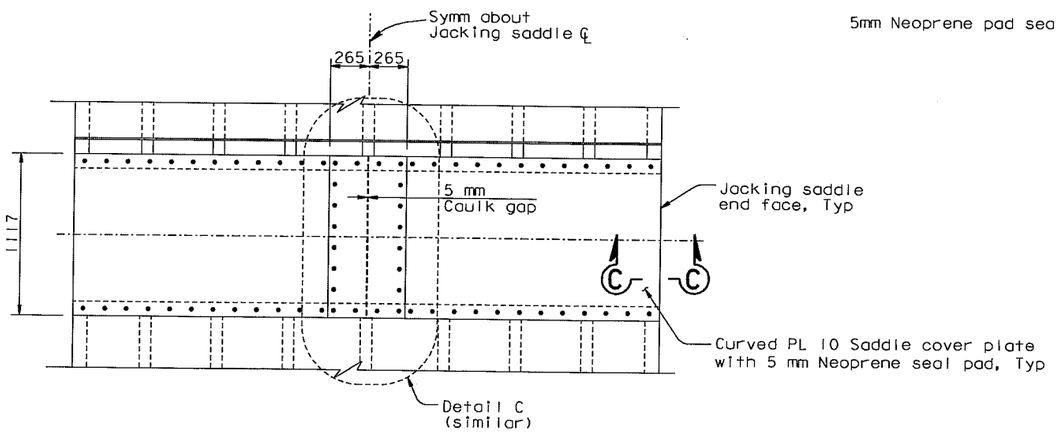

ELEVATION B-B
1:20

REGISTERED PROFESSIONAL ENGINEER James P. Duxbury No. C 64677 Exp. 06/30/07 CIVIL STATE OF CALIFORNIA

FOR REVISIONS ONLY

MARK	DATE	DESCRIPTIONS	BY	CH'D	CCO#
1	04/20/07	WEST ANCHORAGE ACCESS DETAILS	JD	AS	28

REVISIONS

CONTRACT CHANGE ORDER NO. 28
SHEET 3 OF 9

NOTES:

1. For additional details, see "West Jacking Saddle Details" sheets.
2. For jacking frame details, see "West Jacking Frame Details" sheets.
3. For Details A and B, see "West Deviation Saddle Housing Details No. 1" sheet.
4. For Section C-C and Details C and D, see "West Deviation Saddle Housing Details No. 2" sheet.
5. All plate shall be ASTM A709M Grade 345, unless specified otherwise.
6. For Details H and G, see "West Anchorage Access Details No. 4" sheet.
7. If the Contractor elects to use the West Jacking Saddle Splice Alternate, the joint between the saddle cover plates shall be removed.

ALL DIMENSIONS ARE IN MILLIMETERS UNLESS OTHERWISE SHOWN

R. Valizadeh/V. Toan/Y.L./W.L./F.C.
DESIGN OVERSIGHT
Ron Valizadeh / Vong Toan / Y. Lin
SIGN OFF DATE 04/20/07

	BY	CHECKED
DESIGN	J. Sun	T. McMeans
DETAILS	J. Duxbury	T. McMeans
QUANTITIES	J. Duxbury	S. Shi

PREPARED FOR THE STATE OF CALIFORNIA DEPARTMENT OF TRANSPORTATION

R. Manzanarez
PROJECT ENGINEER

BRIDGE NO. 34-0006L/R
KILOMETER POST 13.2/13.9

SAN FRANCISCO OAKLAND BAY BRIDGE
EAST SPAN SEISMIC SAFETY PROJECT
SELF-ANCHORED SUSPENSION BRIDGE
(SUPERSTRUCTURE & TOWER)

WEST JACKING SADDLE HOUSING DETAILS

Rev. Date: 5-18-98

ORIGINAL SCALE IN MILLIMETERS FOR REDUCED PLANS 0 10 20 30 40 50 60 70 80 90 100

CU 04
EA 0120F1

DISREGARD PRINTS BEARING EARLIER REVISION DATES

REVISION DATES (PRELIMINARY STAGE ONLY) 05/31/01 04/08/02 07/31/02 12/19/02

SHEET 376R1 OF

FILE => I:\bb\04-012001\sas\contract plans and cco\cco\in progress\cco#28\cagshd02a.dgn

100 % PS&E

USERNAME => vlignatovs DATE PLOTTED => 19 APR 2007 TIME PLOTTED => 15:29:00

DIST.	COUNTY	ROUTE	KILOMETER POST TOTAL PROJECT	SHEET NO.	TOTAL SHEETS
04	SF	80	13.2/13.9	807R1	1204

REGISTERED ENGINEER - CIVIL

12-6-04

PLANS APPROVAL DATE

REGISTERED PROFESSIONAL ENGINEER John Sun No. C 54648 Exp. 12/31/05 CIVIL STATE OF CALIFORNIA

The State of California or its officers or agents shall not be responsible for the accuracy or completeness of electronic copies of this plan sheet.

REGISTERED PROFESSIONAL ENGINEER James P. Duxbury No. C 64677 Exp. 06/30/07 CIVIL STATE OF CALIFORNIA

FOR REVISIONS ONLY

T.Y. LIN / MOFFATT & NICHOL
825 BATTERY STREET
SAN FRANCISCO, CA 94111

Caltrans now has a web site! To get to the web site, go to: http://www.dot.ca.gov

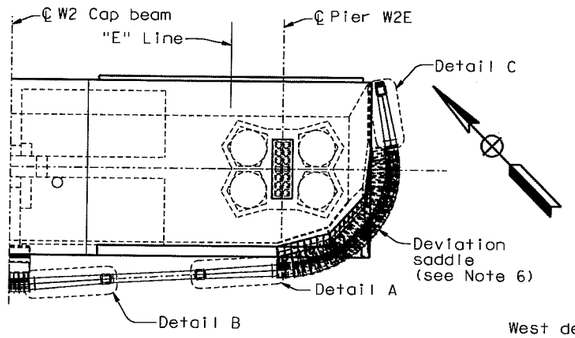

KEY PLAN
NTS

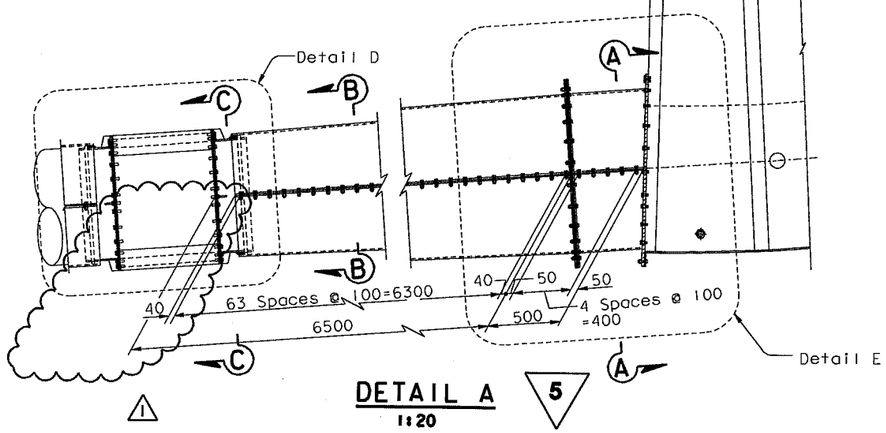

DETAIL A
1:20

5

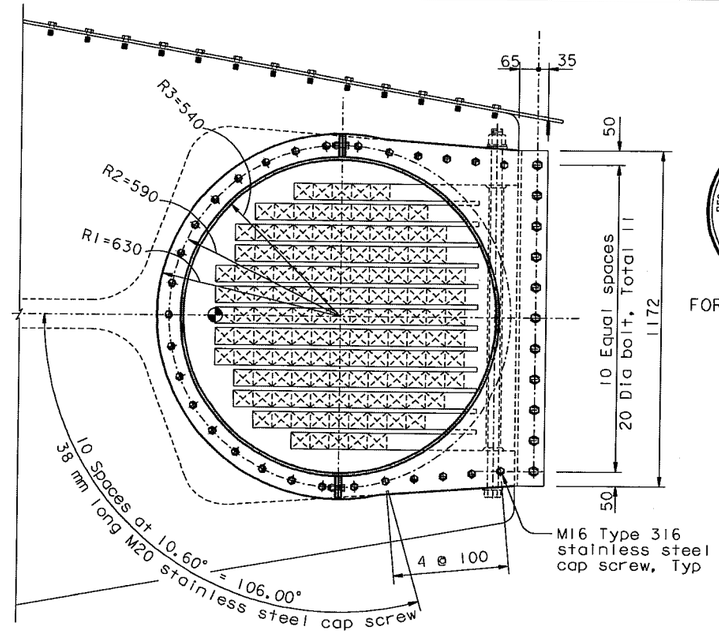

SECTION A-A
1:10

(Project to deviation saddle face)

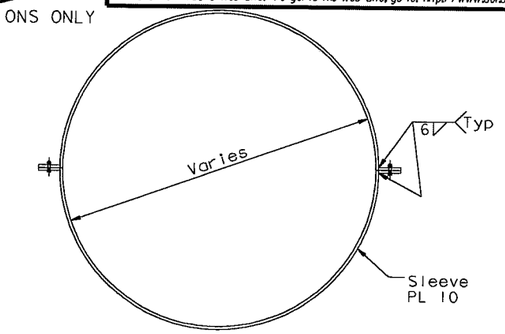

SECTION B-B
1:10

MARK	DATE	DESCRIPTIONS	BY	CH'D	CCO#
1	04/20/07	WEST ANCHORAGE ACCESS DETAILS	JD	AS	28

REVISIONS

CONTRACT CHANGE ORDER NO. 28
SHEET 4 OF 9

5 **REVISED PER ADDENDUM NO. 5 DATED DECEMBER 21, 2005**

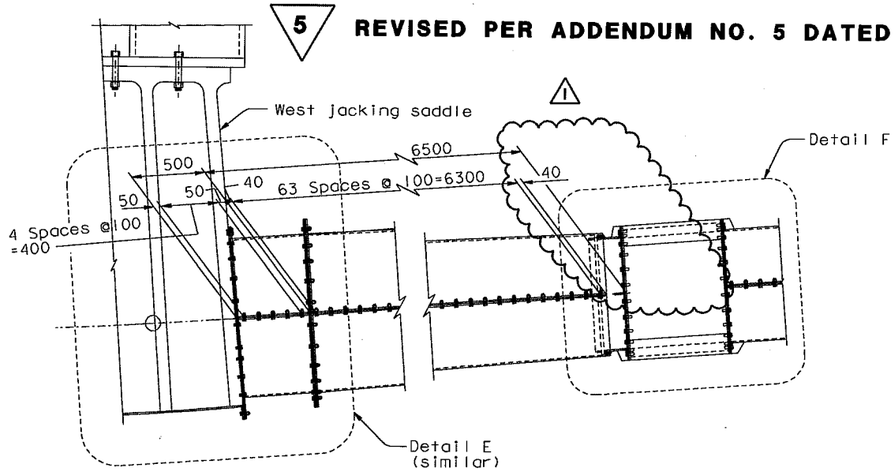

DETAIL B
1:20

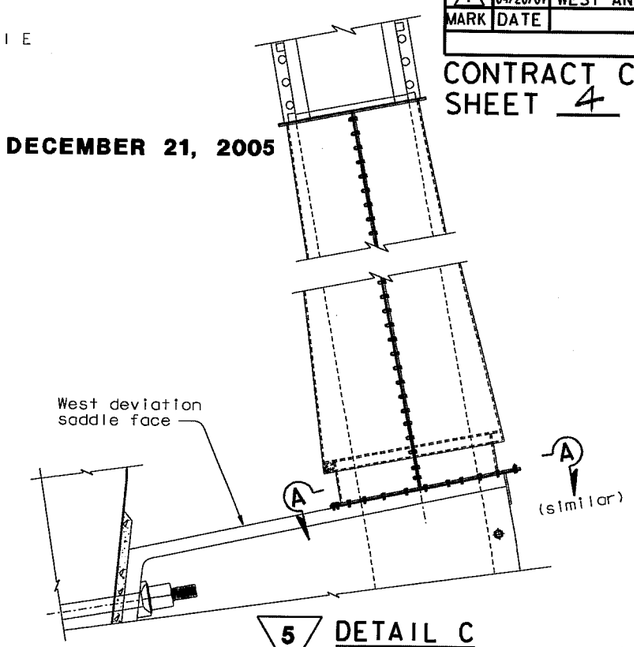

5 **DETAIL C**
1:20

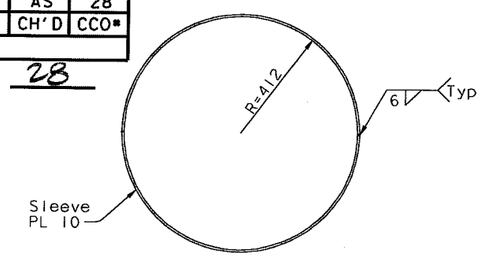

SECTION C-C
1:10

NOTES:

1. For Details D through F, see "West Cable Shroud Details No.2" sheet.
2. All details, except the key plan, are presented in the plan of looping anchorage cable.
3. For Detail C, see "Tower Cable Shroud Details" sheet.
4. West cable shroud details shown are "E" Line, "W" Line similar.
5. All plate shall be ASTM A709M Grade 345, unless specified otherwise.
6. Views of the deviation saddle are for illustration only. For deviation saddle details, see "West Deviation Saddle Details" sheets.

ALL DIMENSIONS ARE IN MILLIMETERS UNLESS OTHERWISE SHOWN

100 % PS&E

USERNAME => vignatovs DATE PLOTTED => 19 APR 2007 TIME PLOTTED => 15:29:47

R. Valizadeh/V. Toan/Y.L./W.L./F.C.
DESIGN OVERSIGHT
Y. Liu
SIGN OFF DATE 04/20/07
Rev. Date: 5-18-98

	BY	CHECKED	
DESIGN	J. Sun	T. McMeans	
DETAILS	J. Duxbury	T. McMeans	
QUANTITIES	S. Shi	D. Harrison	

PREPARED FOR THE STATE OF CALIFORNIA DEPARTMENT OF TRANSPORTATION

R. Manzanarez
PROJECT ENGINEER

BRIDGE NO. 34-0006L/R
KILOMETER POST 13.2/13.9

SAN FRANCISCO OAKLAND BAY BRIDGE
EAST SPAN SEISMIC SAFETY PROJECT
SELF-ANCHORED SUSPENSION BRIDGE
(SUPERSTRUCTURE & TOWER)

WEST CABLE SHROUD DETAILS NO. 1

ORIGINAL SCALE IN MILLIMETERS FOR REDUCED PLANS 0 10 20 30 40 50 60 70 80 90 100

CU 04
EA 0120F1

DISREGARD PRINTS BEARING EARLIER REVISION DATES

REVISION DATES (PRELIMINARY STAGE ONLY) 08/28/99 05/31/01 04/08/02 07/01/02 12/18/02 09/08/04 12/07/05

SHEET 390R1 OF

FILE => I:\bb\04-012001\sas\contract plans and cco\cco\in progress\cco#28\cagshr01.dgn

DIST.	COUNTY	ROUTE	KILOMETER POST TOTAL PROJECT	SHEET NO.	TOTAL SHEETS
04	SF	80	13.2/13.9	909R1	1204

Caltrans Metric

REGISTERED ENGINEER - CIVIL

12-6-04
PLANS APPROVAL DATE

REGISTERED PROFESSIONAL ENGINEER Tien Hung Ho No. C 43990 Exp. 06/03/05 CIVIL STATE OF CALIFORNIA

The State of California or its officers or agents shall not be responsible for the accuracy or completeness of electronic copies of this plan sheet.

T.Y. LIN / MOFFATT & NICHOL
825 BATTERY STREET
SAN FRANCISCO, CA 94111

Caltrans now has a web site! To get to the web site, go to: http://www.dot.ca.gov

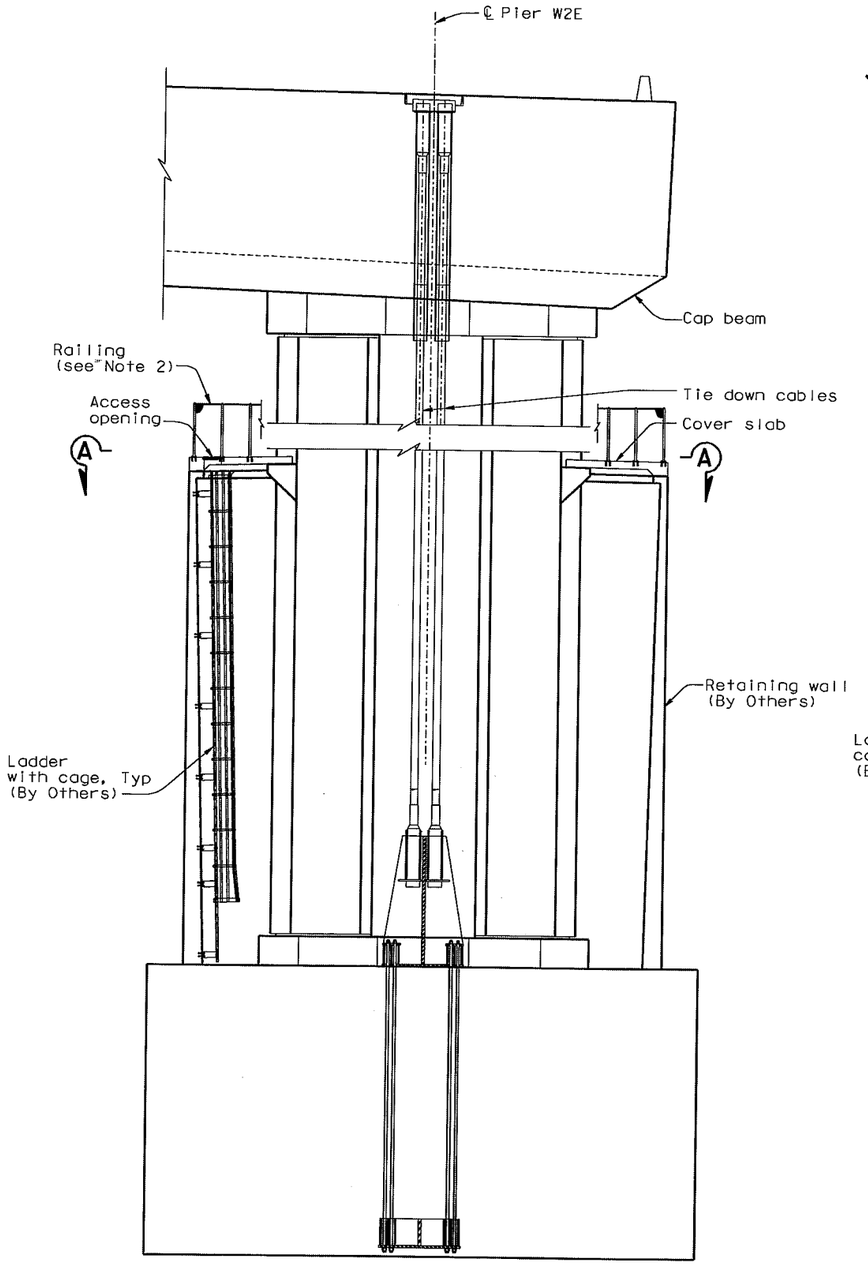

ELEVATION
1:100

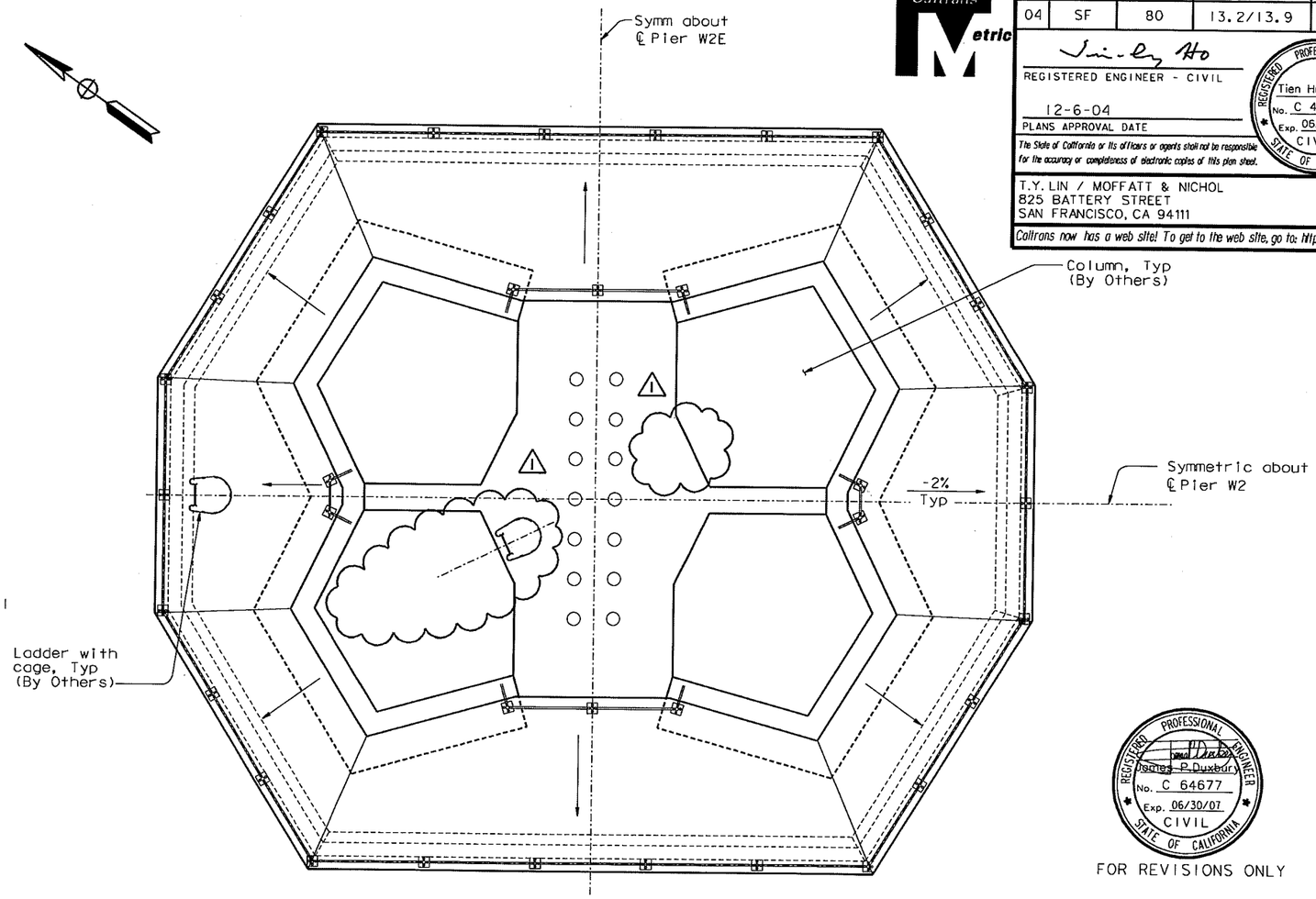

SECTION A-A
1:50

REGISTERED PROFESSIONAL ENGINEER James P. Duxbury No. C 64677 Exp. 06/30/07 CIVIL STATE OF CALIFORNIA

FOR REVISIONS ONLY

MARK	DATE	DESCRIPTIONS	BY	CH'D	CCO#
1	04/20/07	WEST ANCHORAGE ACCESS DETAILS	JD	AS	28

REVISIONS

CONTRACT CHANGE ORDER NO. 28
SHEET 5 OF 9

NOTES

1. For cover slab details, see "Pier W2 Details" sheets.
2. For railing, see "Pier W2 Details No.6" sheet.
3. Pier W2E access details shown, access details for Pier W2W similar.

3 REVISED PER ADDENDUM NO. 3 DATED NOVEMBER 7, 2005

3

ALL DIMENSIONS ARE IN MILLIMETERS UNLESS OTHERWISE SHOWN

R. Valizadeh/V. Toan/Y.L./W.L./F.C.
DESIGN OVERSIGHT
Roger Valizadeh / Vong Toan / Y. Lin
SIGN OFF DATE 04/20/07
Rev. Date: 5-18-98

DESIGN	BY T. Ho	CHECKED N. Vo	
DETAILS	BY J. Duxbury	CHECKED N. Vo	
QUANTITIES	BY S. Shi	CHECKED J. Leventini	

PREPARED FOR THE STATE OF CALIFORNIA DEPARTMENT OF TRANSPORTATION

R. Manzanarez
PROJECT ENGINEER

BRIDGE NO. 34-0006L/R
KILOMETER POST 13.2/13.9

SAN FRANCISCO OAKLAND BAY BRIDGE
EAST SPAN SEISMIC SAFETY PROJECT
SELF-ANCHORED SUSPENSION BRIDGE
(SUPERSTRUCTURE & TOWER)

PIER W2 ACCESS DETAILS NO. 1

ORIGINAL SCALE IN MILLIMETERS FOR REDUCED PLANS 0 10 20 30 40 50 60 70 80 90 100

CU 04
EA 0120F1

DISREGARD PRINTS BEARING EARLIER REVISION DATES

REVISION DATES (PRELIMINARY STAGE ONLY) 08/02/99 05/31/01 04/08/02 07/01/02 12/19/02 10/13/05

SHEET 492R1 OF

FILE => I:\bb\04-012001\sas\contract plans and cco\cco\in progress\cco#28\akacc01.dgn

100 % PS&E

USERNAME => vignotovs DATE PLOTTED => 19 APR 2007 TIME PLOTTED => 15:30:35

MARK	DATE	DESCRIPTIONS	BY	CH'D	CCO#
1	04/20/07	WEST ANCHORAGE ACCESS DETAILS	GB	TH	28

REVISIONS

CONTRACT CHANGE ORDER NO. 28
SHEET 6 OF 9

DIST.	COUNTY	ROUTE	KILOMETER POST TOTAL PROJECT	SHEET NO.	TOTAL SHEETS
04	SF	80	13.2/13.9	911R1	1204

Caltrans Metric

REGISTERED ENGINEER - CIVIL

12-6-04
PLANS APPROVAL DATE

REGISTERED PROFESSIONAL ENGINEER
Tien Hung Ho
No. C 43990
Exp. 06/03/07
CIVIL
STATE OF CALIFORNIA

The State of California or its officers or agents shall not be responsible for the accuracy or completeness of electronic copies of this plan sheet.

T.Y. LIN / MOFFATT & NICHOL
825 BATTERY STREET
SAN FRANCISCO, CA 94111

Caltrans now has a web site! To get to the web site, go to: http://www.dot.ca.gov

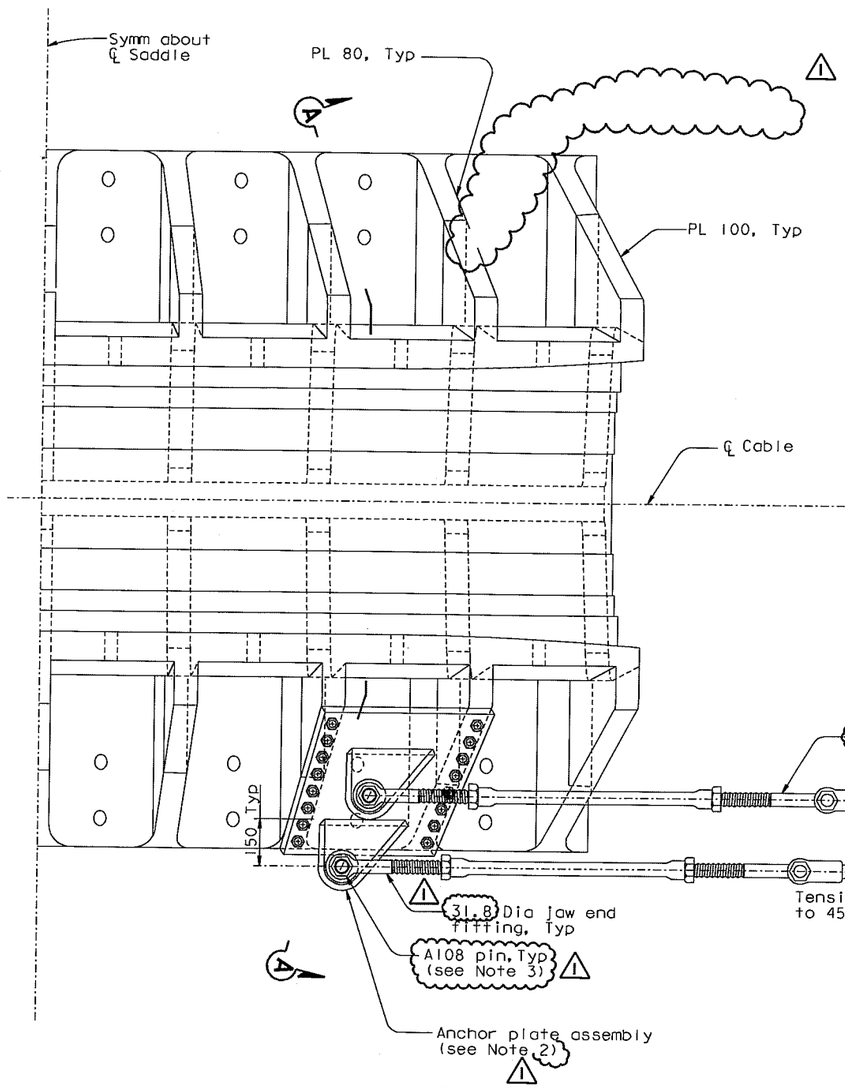

DETAIL A
NTS

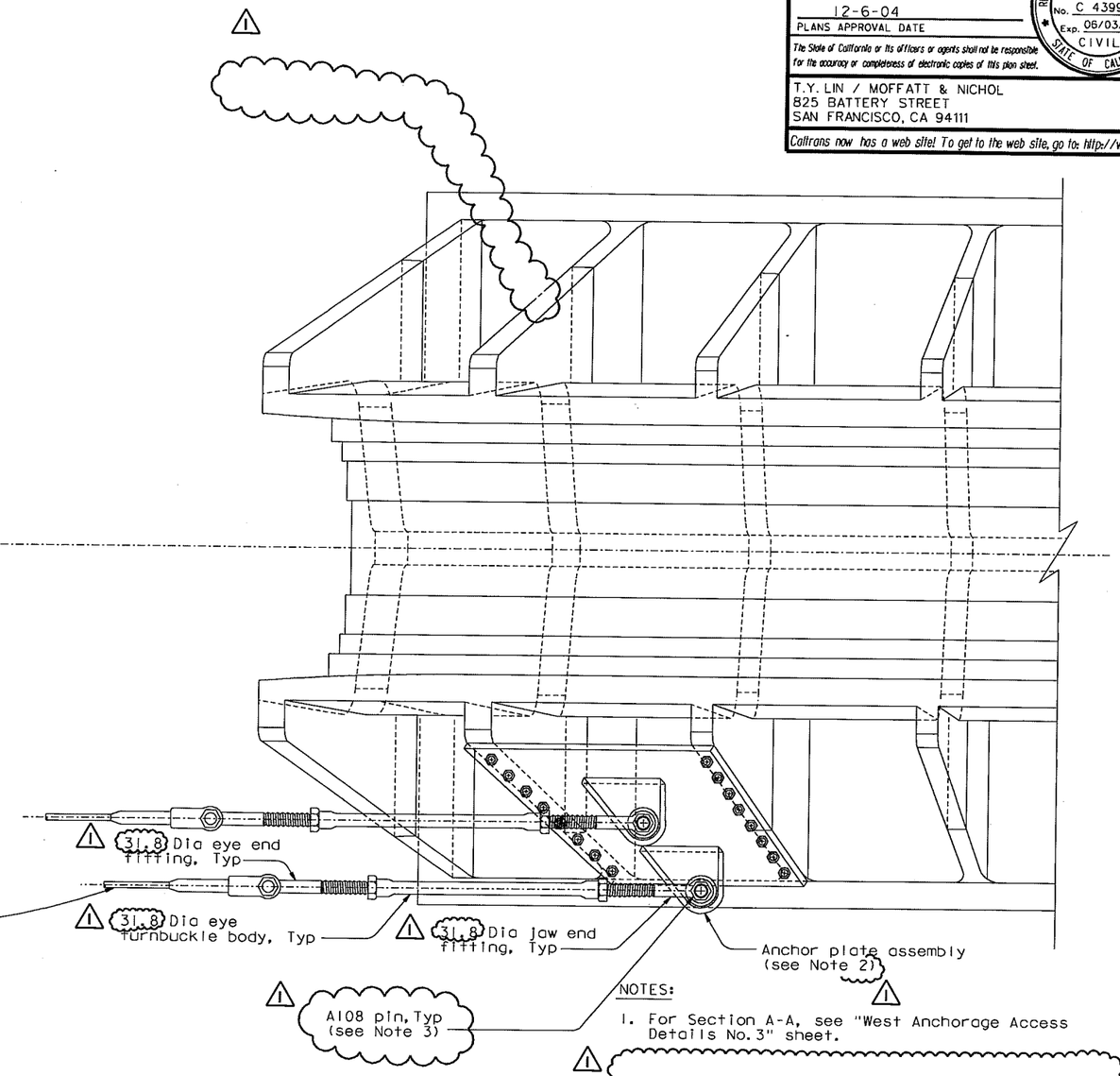

DETAIL B
NTS

NOTES:

1. For Section A-A, see "West Anchorage Access Details No. 3" sheet.
2. For Anchor plate assembly detail, see "West Anchorage Access Details No. 3" sheet.
3. For pin details see "Cable Handrope Details No. 2" sheet.

ALL DIMENSIONS ARE IN MILLIMETERS UNLESS OTHERWISE SHOWN

R. Valizadeh/V. Toan/Y.L./W.L./F.C.
DESIGN OVERSIGHT
SIGN OFF DATE 04/20/07
Rev. Date: 5-18-98

	BY	CHECKED
DESIGN	T. Ho	N. Vo
DETAILS	J. Sun	N. Vo
QUANTITIES	T. Ho	N. Vo

PREPARED FOR THE STATE OF CALIFORNIA DEPARTMENT OF TRANSPORTATION

R. Manzanarez
PROJECT ENGINEER

BRIDGE NO. 34-0006L/R
KILOMETER POST 13.2/13.9

SAN FRANCISCO OAKLAND BAY BRIDGE
EAST SPAN SEISMIC SAFETY PROJECT
SELF-ANCHORED SUSPENSION BRIDGE
(SUPERSTRUCTURE & TOWER)

WEST ANCHORAGE ACCESS DETAILS NO. 2

ORIGINAL SCALE IN MILLIMETERS FOR REDUCED PLANS 0 10 20 30 40 50 60 70 80 90 100

CU 04
EA 0120F1

DISREGARD PRINTS BEARING EARLIER REVISION DATES

REVISION DATES (PRELIMINARY STAGE ONLY) 08/06/99 05/31/01 04/08/02 07/01/02 12/19/02 09/06/04

SHEET 494R1 OF

FILE => I:\bb\04-012001\sas\contract plans and cco\cco\in progress\cco#28\cakacc02d.dgn

100 % PS&E

USERNAME => vignatovs DATE PLOTTED => 19 APR 2007 TIME PLOTTED => 15:31:21

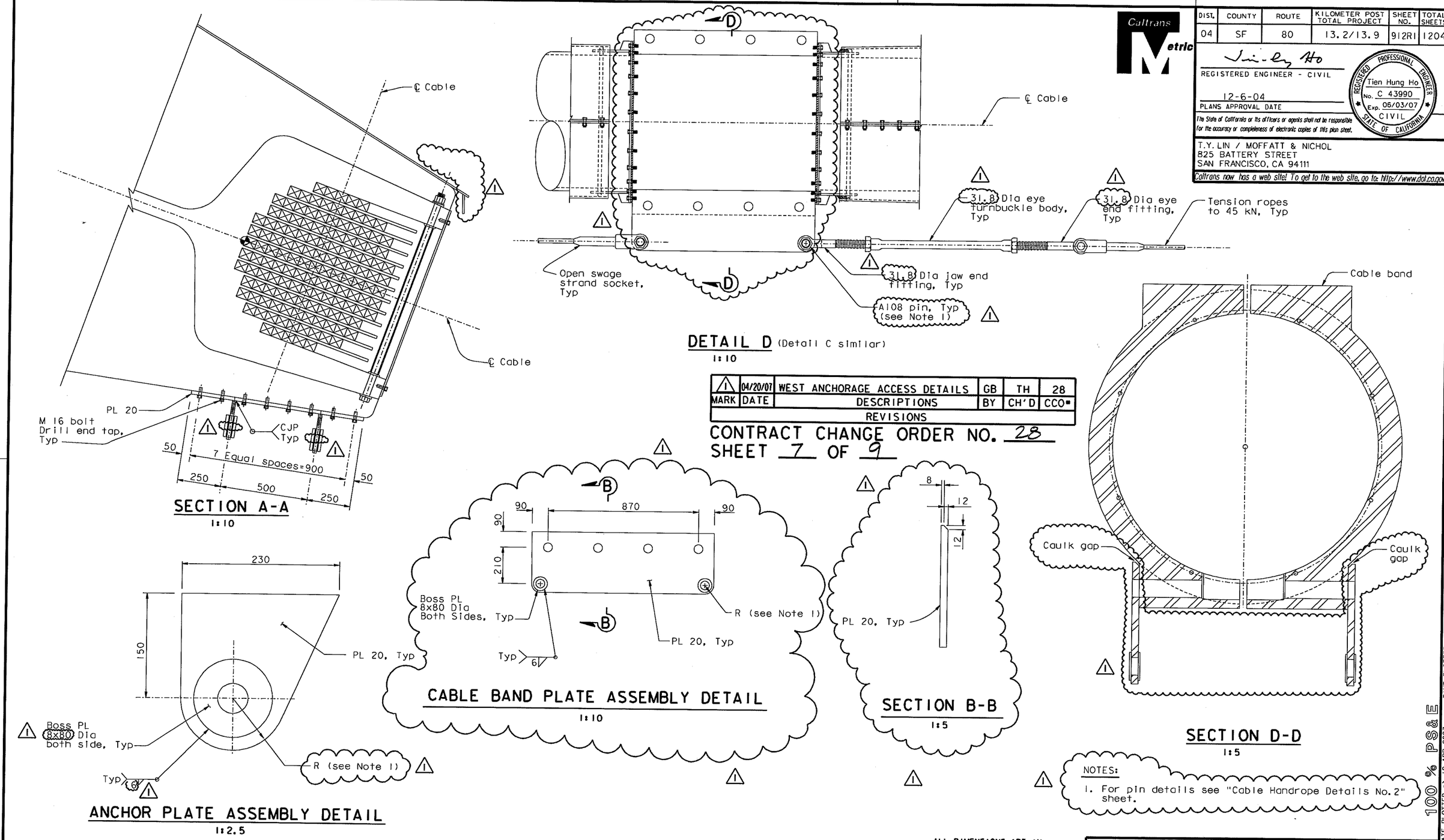

SECTION A-A
1:10

DETAIL D (Detail C similar)
1:10

SECTION D-D
1:5

ANCHOR PLATE ASSEMBLY DETAIL
1:2.5

CABLE BAND PLATE ASSEMBLY DETAIL
1:10

SECTION B-B
1:5

MARK	DATE	DESCRIPTIONS	BY	CH'D	CCO#
1	04/20/07	WEST ANCHORAGE ACCESS DETAILS	GB	TH	28

REVISIONS

CONTRACT CHANGE ORDER NO. 28
SHEET 7 OF 9

NOTES:
1. For pin details see "Cable Handrope Details No.2" sheet.

Caltrans Metric

DIST.	COUNTY	ROUTE	KILOMETER POST TOTAL PROJECT	SHEET NO.	TOTAL SHEETS
04	SF	80	13.2/13.9	912R1	1204

REGISTERED ENGINEER - CIVIL
12-6-04
PLANS APPROVAL DATE

REGISTERED PROFESSIONAL ENGINEER
Tien Hung Ho
No. C 43990
Exp. 06/03/07
CIVIL
STATE OF CALIFORNIA

The State of California or its officers or agents shall not be responsible for the accuracy or completeness of electronic copies of this plan sheet.

T.Y. LIN / MOFFATT & NICHOL
825 BATTERY STREET
SAN FRANCISCO, CA 94111

Caltrans now has a web site! To get to the web site, go to: http://www.dot.ca.gov

100 % PS&E

USERNAME => vignotovs DATE PLOTTED => 19 APR 2007 TIME PLOTTED => 15:26:58

ALL DIMENSIONS ARE IN MILLIMETERS UNLESS OTHERWISE SHOWN

R. Valizadeh/V. Toan/Y.L./W.L./F.C.
DESIGN OVERSIGHT
Roger Valizadeh / Vong Toan / Y. Liu
SIGN OFF DATE 04/20/07
Rev. Date: 5-18-98

	BY	CHECKED
DESIGN	T. Ho	N. Vo
DETAILS	J. Sun	N. Vo
QUANTITIES	T. Ho	N. Vo

PREPARED FOR THE STATE OF CALIFORNIA DEPARTMENT OF TRANSPORTATION

R. Manzanarez
PROJECT ENGINEER

BRIDGE NO. 34-0006L/R
KILOMETER POST 13.2/13.9

SAN FRANCISCO OAKLAND BAY BRIDGE
EAST SPAN SEISMIC SAFETY PROJECT
SELF-ANCHORED SUSPENSION BRIDGE
(SUPERSTRUCTURE & TOWER)

WEST ANCHORAGE ACCESS DETAILS NO. 3

ORIGINAL SCALE IN MILLIMETERS FOR REDUCED PLANS 0 10 20 30 40 50 60 70 80 90 100

CU 04
EA 0120F1

DISREGARD PRINTS BEARING EARLIER REVISION DATES

REVISION DATES (PRELIMINARY STAGE ONLY) 08/02/99 05/31/01 04/08/02 07/01/02 12/19/02 09/06/04

SHEET 495R1 OF

FILE => L:\BB\04-012001\SAS\Contract Plans and CCO\CCO\In Progress\CCO#28\cakacc02e.dgn

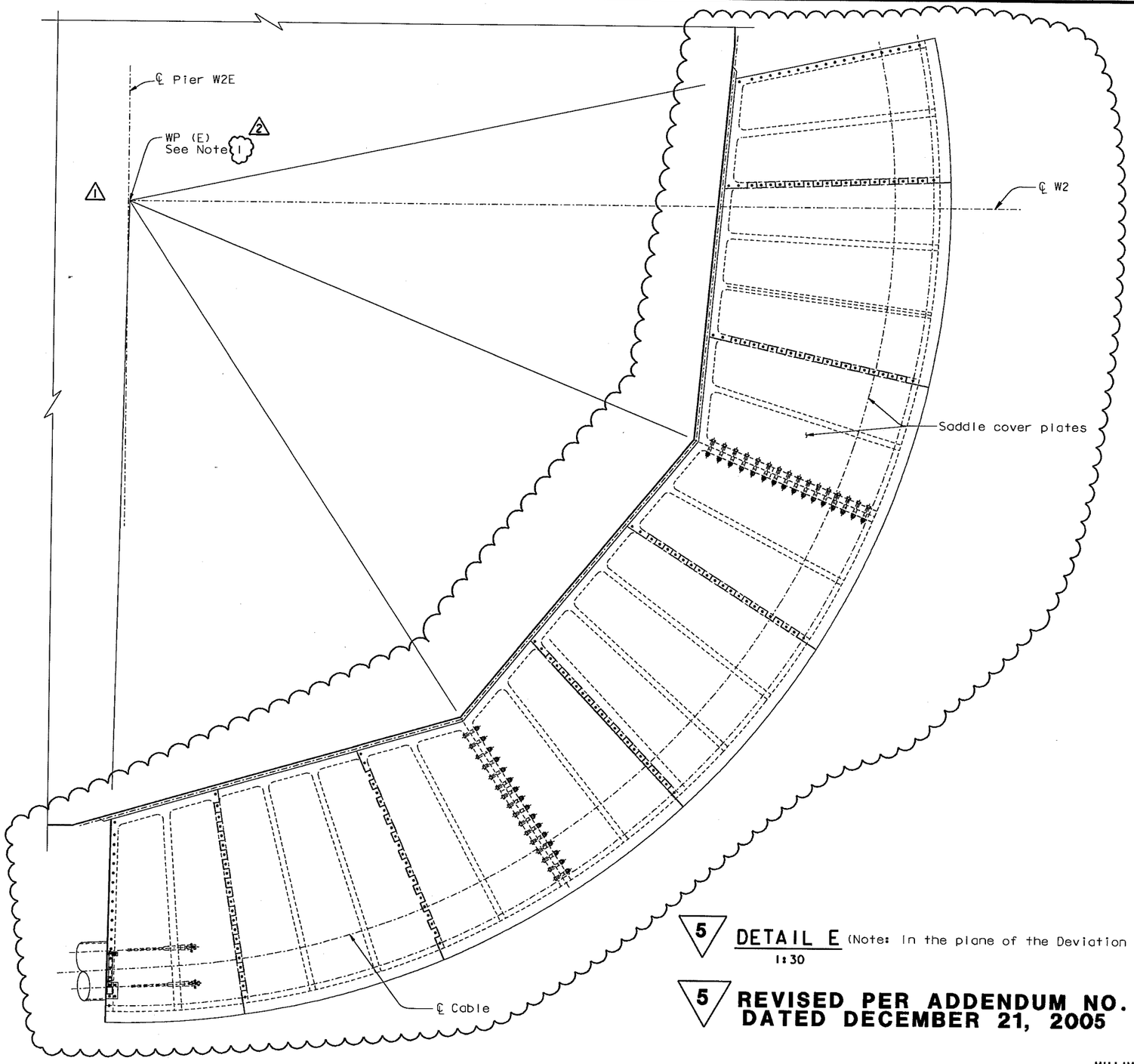

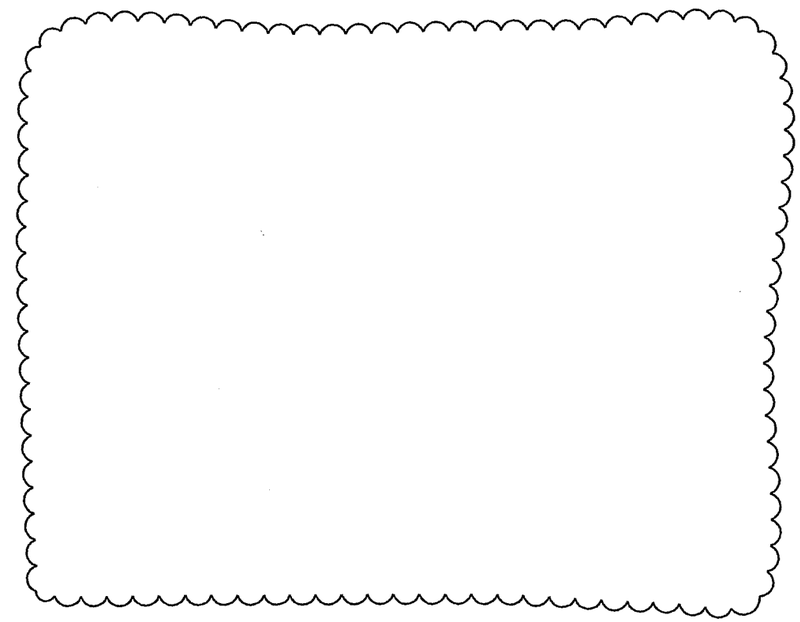

DIST.	COUNTY	ROUTE	KILOMETER POST TOTAL PROJECT	SHEET NO.	TOTAL SHEETS
04	SF	80	13.2/13.9	913R2	1204

Caltrans Metric

REGISTERED ENGINEER - CIVIL

12-6-04
PLANS APPROVAL DATE

REGISTERED PROFESSIONAL ENGINEER
Tien Hung Ho
No. C 43990
Exp. 06/03/07
CIVIL
STATE OF CALIFORNIA

The State of California or its officers or agents shall not be responsible for the accuracy or completeness of electronic copies of this plan sheet.

T.Y. LIN / MOFFATT & NICHOL
825 BATTERY STREET
SAN FRANCISCO, CA 94111

Caltrans now has a web site! To get to the web site, go to: http://www.dot.ca.gov

MARK	DATE	DESCRIPTIONS	BY	CH'D	CCO#
2	04/20/07	WEST ANCHORAGE ACCESS DETAILS	GB	TH	28
1	01/31/07	WEST DEVIATION SADDLE GEOMETRY	PC	TH	15

REVISIONS

CONTRACT CHANGE ORDER NO. 28
SHEET 8 OF 9

NOTES:

1. WP(E) and WP(W) do not coincide with ℄ of Pier W2, ℄ Pier W2E nor ℄ Pier W2W.

5 DETAIL E (Note: In the plane of the Deviation saddle)
1:30

5 REVISED PER ADDENDUM NO. 5
DATED DECEMBER 21, 2005

ALL DIMENSIONS ARE IN MILLIMETERS UNLESS OTHERWISE SHOWN

100 % PS&E

USERNAME => vignatovs DATE PLOTTED => 02 JUL 2007 TIME PLOTTED => 15:17:29

R. Valizadeh/V. Toan/Y.L./W.L./F.C.
DESIGN OVERSIGHT
Reza Valizadeh / Vong Toan / Y. Liu
SIGN OFF DATE 04/20/07
Rev. Date: 5-18-98

	BY	CHECKED
DESIGN	T. Ho	N. Vo
DETAILS	J. Sun	N. Vo
QUANTITIES	T. Ho	N. Vo

PREPARED FOR THE STATE OF CALIFORNIA DEPARTMENT OF TRANSPORTATION

R. Manzanarez
PROJECT ENGINEER

BRIDGE NO. 34-0006L/R
KILOMETER POST 13.2/13.9

SAN FRANCISCO OAKLAND BAY BRIDGE
EAST SPAN SEISMIC SAFETY PROJECT
SELF-ANCHORED SUSPENSION BRIDGE
(SUPERSTRUCTURE & TOWER)

WEST ANCHORAGE ACCESS DETAILS NO. 4

ORIGINAL SCALE IN MILLIMETERS FOR REDUCED PLANS 0 10 20 30 40 50 60 70 80 90 100

CU 04
EA 0120F1

DISREGARD PRINTS BEARING EARLIER REVISION DATES

REVISION DATES (PRELIMINARY STAGE ONLY) 05/31/01 04/08/02 07/01/02 12/19/02 09/06/04 12/07/05

SHEET 496R2 OF

FILE => L:\BB\04-012001\SAS\Contract Plans and CCO\CCO\In Progress\CCO#28\cakacc02f.dgn

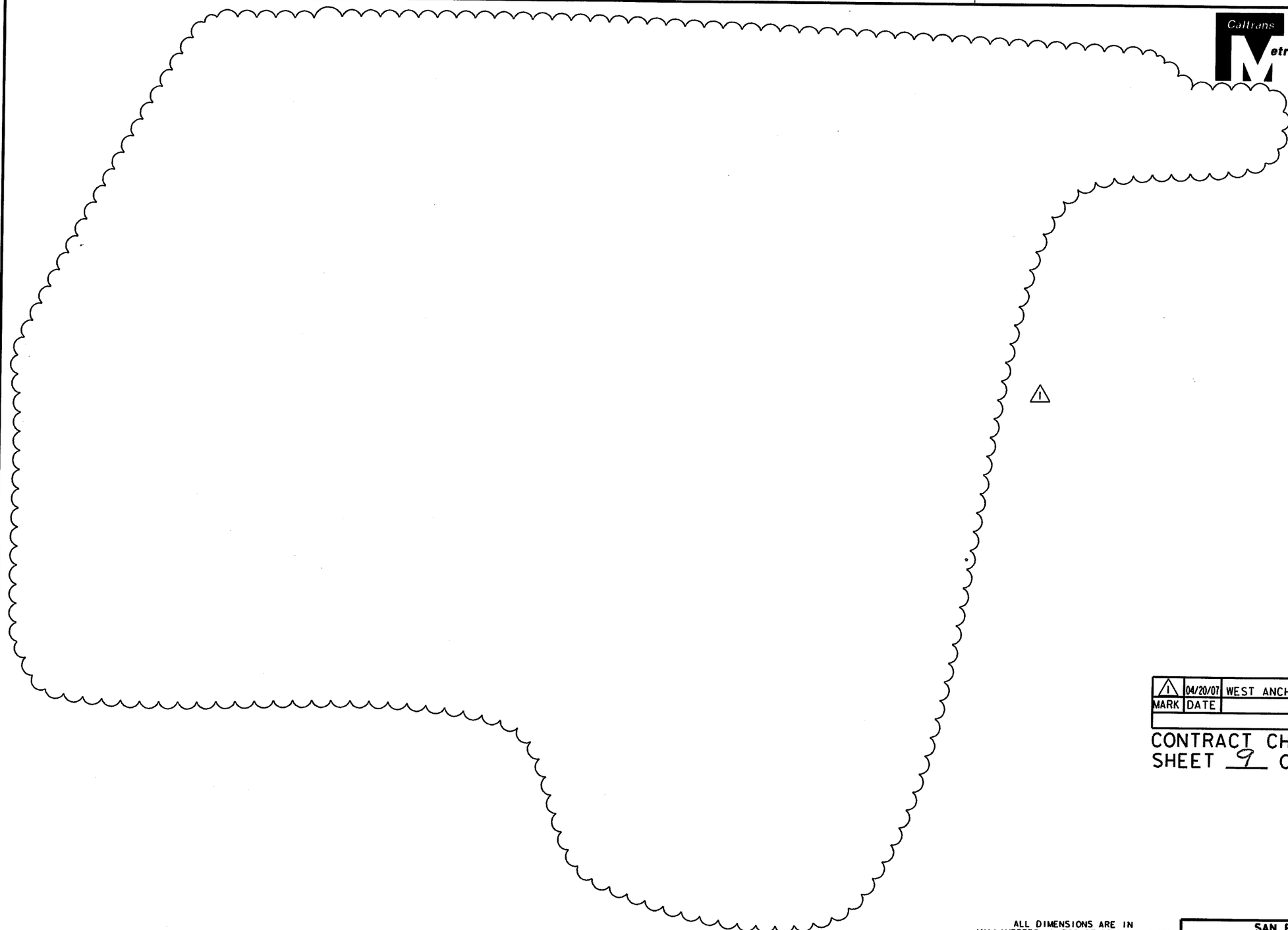

DIST.	COUNTY	ROUTE	KILOMETER POST TOTAL PROJECT	SHEET NO.	TOTAL SHEETS
04	SF	80	13.2/13.9	914R1	1204

Caltrans Metric

REGISTERED ENGINEER - CIVIL

12-6-04
PLANS APPROVAL DATE

REGISTERED PROFESSIONAL ENGINEER
Tien Hung Ho
No. C 43990
Exp. 06/03/07
CIVIL
STATE OF CALIFORNIA

The State of California or its officers or agents shall not be responsible for the accuracy or completeness of electronic copies of this plan sheet.

T.Y. LIN / MOFFATT & NICHOL
825 BATTERY STREET
SAN FRANCISCO, CA 94111

Caltrans now has a web site! To get to the web site, go to: http://www.dot.ca.gov

MARK	DATE	DESCRIPTIONS	BY	CH'D	CCO#
1	04/20/07	WEST ANCHORAGE ACCESS DETAILS	GB	TH	28

REVISIONS

CONTRACT CHANGE ORDER NO. 28
SHEET 9 OF 9

100 % PS&E

ALL DIMENSIONS ARE IN MILLIMETERS UNLESS OTHERWISE SHOWN

R. Valizadeh/V. Toan/Y.L./W.L./F.C.
DESIGN OVERSIGHT
Reza Valizadeh / Vong Toan / Y. Liu
SIGN OFF DATE 04/20/07
Rev. Date: 5-18-98

	BY	CHECKED
DESIGN	T. Ho	N. Vo
DETAILS	J. Sun	N. Vo
QUANTITIES	T. Ho	N. Vo

PREPARED FOR THE
STATE OF CALIFORNIA
DEPARTMENT OF TRANSPORTATION

R. Manzanarez
PROJECT ENGINEER

BRIDGE NO. 34-0006L/R
KILOMETER POST 12.6/13.9

SAN FRANCISCO OAKLAND BAY BRIDGE
EAST SPAN SEISMIC SAFETY PROJECT
SELF-ANCHORED SUSPENSION BRIDGE
(SUPERSTRUCTURE & TOWER)

WEST ANCHORAGE ACCESS DETAILS NO. 5

ORIGINAL SCALE IN MILLIMETERS FOR REDUCED PLANS 0 10 20 30 40 50 60 70 80 90 100

CU 04
EA 0120F1

DISREGARD PRINTS BEARING EARLIER REVISION DATES

REVISION DATES (PRELIMINARY STAGE ONLY) 05/31/01 04/08/02 07/01/02 12/19/02

SHEET 497R1 OF

FILE => I:\bb\04-012001\sas\contract plans and cco\cco\in progress\cco#28\akacc02g.dgn

USERNAME => vignatovsk DATE PLOTTED => 19 APR 2007 TIME PLOTTED => 15:33:23

STATE OF CALIFORNIA - DEPARTMENT OF TRANSPORTATION

CONTRACT CHANGE ORDER

Change Requested by: Engineer

CCO: 29	Suppl. No. 0	Contract No. 04 - 0120F4	Road SF-80-13.2/13.9	FED. AID LOC.:

To: **AMERICAN BRIDGE/FLUOR ENTERPRISES INC A JOINT VENT**

You are directed to make the following changes from the plans and specifications or do the following described work not included in the plans and specifications for this contract. ***NOTE: This change order is not effective until approved by the Engineer.***

Description of work to be done, estimate of quantities and prices to be paid. (Segregate between additional work at contract price, agreed price and force account.) Unless otherwise stated, rates for rental of equipment cover only such time as equipment is actually used and no allowance will be made for idle time. This last percentage shown is the net accumulated increase or decrease from the original quantity in the Engineer's Estimate.

Adjustment of Compensation at Lump Sum:

Reimburse the Contractor for additional detailing resulting from various RFI's and change orders as shown on Sheet two (2) through three (3) of this change order.

For this work the Contractor shall receive and accept the sum of $81,329.05. This sum constitutes full and complete compensation for furnishing all labor, material, tools and incidentals including all markups by reason of this Change.

Estimated cost of Adjustment of Compensation at Lump Sum $81,329.05

Estimated Cost: Increase ☑ **Decrease** ☐ **$81,329.05**

By reason of this order the time of completion will be adjusted as follows: 0 days

Submitted by

Signature	Resident Engineer Gary Pursell, P.E., Sup.T.E.	Date 8/14/07

Approval Recommended by

Signature	Supervising Bridge Engineer Richard Morrow, P.E., Sup. BE	Date 8/14/07

Engineer Approval by

Signature	Supervising Transportation Engineer Gary Pursell, P.E., Sup. TE	Date 8/14/07

We the undersigned contractor, have given careful consideration to the change proposed and agree, if this proposal is approved, that we will provide all equipment, furnish the materials, except as may otherwise be noted above, and perform all services necessary for the work above specified, and will accept as full payment therefor the prices shown above.

NOTE: If you, the contractor, do not sign acceptance of this order, your attention is directed to the requirements of the specifications as to proceeding with the ordered work and filing a written protest within the time therein specified.

Contractor Acceptance by

Signature	(Print name and title)	Date
RETURNED UNSIGNED 8/23/07		

STATE OF CALIFORNIA
DEPARTMENT OF TRANSPORTATION

HC-5(Rev. 5/93)

CONTRACT CHANGE ORDER NO. 29 SUPPL. NO. ---

ROAD 04-SF-80-13.2, 13.9 SHEET 2 OF 3 SHEETS

FEDERAL NO.(S) _____ CONTRACT NO.: 04-0120F4

Breakdown of additional detailing costs from ABFJV and it's detailer, Candraft-Tensor, LLC (CTLLC) associated with Change Order No. 029

Item Number	CTLLC Change Order Est. No.	Tensor Extra No.	ABFJV RFI No.	CTLCC RFI No.	Amount (less deduction for CTLLC's Markup on Hassett)
1	Xtra-014*	X082-E	ABF-RFI-000545R00	N/A	$1,840.00
2	Xtra-017*	X005-E X005-E X005-E	ABF-RFI-000155R00 ABF-RFI-000168R00 ABF-RFI-000169R00	RFI-TEN-635055R00 RFI-TEN-635056R00 RFI-TEN-635057R00	$6,662.00
3	Xtra-020*	X027-E X027-E	ABF-RFI-000062R00 ABF-RFI-000414R00	RFI-TEN-635023R00 RFI-TEN-635144R00	$3,479.00
4	Xtra-023*	X048-E X048-E X048-E X048-E X072-E	ABF-RFI-TEN-000002R00 ABF-RFI-000537R00 ABF-RFI-000537R01 ABF-RFI-TEN-000011R00 ABF-RFI-000497R00	RFI-TEN-635167R00 RFI-TEN-635169R00 RFI-TEN-635169R01 RFI-TEN-635181R00 RFI-TEN-635157R00	$13,782.50
5	Xtra-040*	X068-E X068-E	ABF-RFI-000512R00 ABF-RFI-000521R01	RFI-TEN-635160R00 RFI-TEN-635112R01	$3,542.50
6	Xtra-018*	X019-E	ABF-RFI-000240R00	RFI-TEN-635082R00	$3,611.50
7	Xtra-019*	X024-E X024-E X024-E X020-E	ABF-RFI-000256R00 ABF-RFI-000256R01 ABF-RFI-000317R02 ABF-RFI-000200R00	RFI-TEN-635091R00 RFI-TEN-635091R00 RFI-TEN-635156R00 RFI-TEN-635066R00	$5,730.00
8	Xtra-021*	X032-E X032-E	ABF-RFI-000285R00 ABF-RFI-000285R01	RFI-TEN-635099R00 RFI-TEN-635099R00	$3,302.00
9	Xtra-022*	X003-E X003-E X056-E X056-E X056-E	ABF-RFI-000092R00 ABF-RFI-000092R00 ABF-RFI-000318R00 ABF-RFI-000318R01 ABF-RFI-000318R02	RFI-TEN-635035R00 RFI-TEN-635038R00 RFI-TEN-635113R00 RFI-TEN-635113R01 RFI-TEN-635113R02	$2,456.50
10	Xtra-024*	X051-E X051-E X051-E	ABF-RFI-000368R01 ABF-RFI-000358R01 ABF-RFI-000372R00	RFI-TEN-635124R00 RFI-TEN-635125R00 RFI-TEN-635127R00	$3,062.50
11	Xtra-038*	X031-E X035-E X035-E X047-E X047-E X054-E X054-E X054-E X071-E X071-E X071-E X073-E X073-E	ABF-RFI-000248R00 ABF-RFI-000254R00 ABF-RFI-000254R01 ABF-RFI-000317R00 ABF-RFI-000317R01 ABF-RFI-000348R00 ABF-RFI-000348R01 ABF-RFI-000494R00 ABF-RFI-000526R00 ABF-RFI-000531R00 ABF-RFI-000535R00 ABF-RFI-000541R00 ABF-RFI-000540R00	RFI-TEN-635086R00 RFI-TEN-635089R00 RFI-TEN-635089R01 RFI-TEN-635112R00 RFI-TEN-635112R00 RFI-TEN-635114R00 RFI-TEN-635114R00 RFI-TEN-635155R00 RFI-TEN-635164R00 RFI-TEN-635165R00 RFI-TEN-635166R00 RFI-TEN-635168R00 RFI-TEN-635171R00	$9,090.00

STATE OF CALIFORNIA
DEPARTMENT OF TRANSPORTATION

HC-5(Rev. 5/93)

CONTRACT CHANGE ORDER NO. 29 SUPPL. NO. ---

ROAD 04-SF-80-13.2, 13.9 SHEET 3 OF 3 SHEETS

FEDERAL NO.(S) _____ CONTRACT NO.: 04-0120F4

12	Xtra-039*	X004-E X064-E X077-E X077-E	ABF-RFI-000044R00 ABF-RFI-000411R00 ABF-RFI-000505R00 ABF-RFI-000505R01	RFI-TEN-635005R00 RFI-TEN-635141R00 RFI-TEN-635159R00 RFI-TEN-635159R01	$3,783.50
13	Xtra-041*	X018-E X018-E X021-E X023-E X025-E	ABF-RFI-000102R00 ABF-RFI-000283R00 ABF-RFI-000207R00 ABF-RFI-000202R00 ABF-RFI-000202R00	RFI-TEN-635043R00 RFI-TEN-635083R00 RFI-TEN-635071R00 RFI-TEN-635068R00 RFI-TEN-635068R00	$2,774.00
14	Xtra-042*	X006-E X006-E X006-E X034-E X034-E X042-E X061-E X065-E X065-E X065-E X065-E X065-E X065-E	ABF-RFI-000089R00 ABF-RFI-000089R01 ABF-RFI-000179R00 ABF-RFI-000289R00 ABF-RFI-000289R00 ABF-RFI-000260R00 ABF-RFI-000439R00 ABF-RFI-000446R00 ABF-RFI-000456R00 ABF-RFI-000456R01 ABF-RFI-000446R00 ABF-RFI-000456R00 ABF-RFI-000456R01	RFI-TEN-635033R00 RFI-TEN-635033R00 RFI-TEN-635060R00 RFI-TEN-635100R00 RFI-TEN-635101R00 RFI-TEN-635092R00 RFI-TEN-635148R00 RFI-TEN-635151R00 RFI-TEN-635151R00 RFI-TEN-635151R00 RFI-TEN-635152R00 RFI-TEN-635152R00 RFI-TEN-635152R00	$8,057.00
15	Xtra-043*	X030-E X036-E	ABF-RFI-000231R00 ABF-RFI-000268R00	RFI-TEN-635081R00 RFI-TEN-635094R00	$1,412.50
16	Xtra-055	X094-C	ABF-RFI-000674R00	RFI-TEN-635198R00	$1,350.00
				SUBTOTAL	$73,935.50
				ABFJV Markup (10%)	$7,393.55
				TOTAL*	**$81,329.05**

*ABFJV has deducted from CTLLC's totals the markup that CTLCC had added for markup on Hassett's work.

STATE OF CALIFORNIA - DEPARTMENT OF TRANSPORTATION

CONTRACT CHANGE ORDER MEMORANDUM

DATE: 9/11/2007

TO: Pete Siegenthaler, Prin. TE / Gary Pursell, P.E., Sup T.E.	FILE: E.A. 04 - 0120F4
FROM: Gary Pursell, P.E., Sup.T.E.	CO-RTE-PM SF-80-13.2/13.9
	FED. NO.
CCO#: 29 SUPPLEMENT#: 0 Category Code: CHPA	CONTINGENCY BALANCE (incl. this change) $141,169,525.58
COST: $81,329.05 INCREASE ☑ DECREASE ☐	HEADQUARTERS APPROVAL REQUIRED? ☐ YES ☑ NO
SUPPLEMENTAL FUNDS PROVIDED: $0.00	IS THIS REQUEST IN ACCORDANCE WITH ENVIRONMENTAL DOCUMENTS? ☑ YES ☐ NO
CCO DESCRIPTION: Additional Detailing	**PROJECT DESCRIPTION:** CONSTRUCT SELF-ANCHORED SUSPENSION BRIDGE

Original Contract Time:	Time Adj. This Change:	Previously Approved CCO Time Adjustments:	Percentage Time Adjusted: (including this change)	Total # of Unreconciled Deferred Time CCO(s): (including this change)
2490 Day(s)	0 Day(s)	30 Day(s)	1 %	0

THIS CHANGE ORDER PROVIDES FOR:

Reimbursing the Contractor for additional detailing resulting from various RFI's and change orders as shown on sheet two and three of the change order.

Throughout the duration of the project, various RFI's and change orders have required additional detailing work due to modifications of the plan sheets. These change orders, except for CCO 038, are in various stages of negotiations with the Contractor. It is anticipated that negotiations regarding various change orders, including the detailing cost of some RFI's not yet associated with a CCO, may take an extended period of time based on past experience with negotiations to-date. Because the detailing subcontractor is a small company, the detailer needs to be reimbursed their expended additional costs as soon as possible. This change order compensates the detailer for this extra work, with the understanding that the detailing costs paid by this change order would be deducted in the negotiations with the other change orders.

For this change, the contractor will receive a Lump Sum payment of $81,329.05, which can be financed from the contingency fund. A detailed cost analysis is on file. Because there is additional detailing costs on-going, a supplement may be required for future detailing costs not addressed in this change order.

Design and Maintenance concurrence is not required for this change.

No time adjustment is warranted, as this change does not affect the controlling operation.

This change order shall be executed unilaterally due to the Contractor returning it unsigned. Refer to attached ABFJV letter dated 8/23/2007. The Department disagrees with the Contractor's contention that they need to "reserve our rights to time". See attached Department letter dated 9/11/2007 for reference.

This change order was approved by the Engineer on 9/11/2007.

CONCURRED BY:

Construction Engineer:	Res. Eng., Gary Pursell, Sup. TE	Date	7/12/07
Bridge Engineer:	Struct Rep, Rick Morrow, Sup TE	Date	7/12/07
Project Engineer:	PCE, Pete Siegenthaler, Prin TE	Date	7/12/07
Project Manager:		Date	
FHWA Rep.:		Date	
Environmental:		Date	
Other (specify):	Proj Manager, Ken Terpstra	Date	8/15/07
Other (specify):	HQ, Rob Kobal	Date	7/12/07
District Prior Approval By:		Date	
HQ (Issue Approve) By:		Date	
Resident Engineer's Signature:	Gary Pursell	Date	9/11/07

ESTIMATE OF COST

	THIS REQUEST	TOTAL TO DATE
ITEMS	$0.00	$0.00
FORCE ACCOUNT	$0.00	$0.00
AGREED PRICE	$0.00	$0.00
ADJUSTMENT	$81,329.05	$81,329.05
TOTAL	$81,329.05	$81,329.05

FEDERAL PARTICIPATION

☐ PARTICIPATING ☐ PARTICIPATING IN PART ☑ NONE
☐ NON-PARTICIPATING (MAINTENANCE) ☐ NON-PARTICIPATING

FEDERAL SEGREGATION (if more than one Funding Source or P.I.P. type)
☑ CCO FUNDED PER CONTRACT ☐ CCO FUNDED AS FOLLOWS

FEDERAL FUNDING SOURCE	PERCENT

ADA Notice: For individuals with sensory disabilities, this document is available in alternate formats. For information call: (916) 654-6410 or TDD (916) 654-3880 or write Records and Forms Management, 1120 N Street, MS-89, Sacramento, CA 95814.

STATE OF CALIFORNIA - DEPARTMENT OF TRANSPORTATION

CONTRACT CHANGE ORDER

Change Requested by: Engineer

CCO: 30	Suppl. No. 0	Contract No. 04 - 0120F4	Road SF-80-13.2/13.9	FED. AID LOC.:

To: **AMERICAN BRIDGE/FLUOR ENTERPRISES INC A JOINT VENT**

You are directed to make the following changes from the plans and specifications or do the following described work not included in the plans and specifications for this contract. ***NOTE: This change order is not effective until approved by the Engineer.***

Description of work to be done, estimate of quantities and prices to be paid. (Segregate between additional work at contract price, agreed price and force account.) Unless otherwise stated, rates for rental of equipment cover only such time as equipment is actually used and no allowance will be made for idle time. This last percentage shown is the net accumulated increase or decrease from the original quantity in the Engineer's Estimate.

Extra Work at Force Account:

Provide compensation to the Contractor for the Preliminary Temporary Tower Design Submittals proposed in ABF correspondence ABF-CAL-LTR-000100, dated January 16, 2007, as provided herein.

Up to two preliminary submittals will be provided; 1) Temporary Towers A - D and 2) Temporary Towers F through the east end of the work. Submittal of preliminary calculations and drawings will be provided for technical overview and comment, and each submittal will include, but will not be limited to:

- Wind Loads
- Live Loads
- Ship Impact Loads
- Seismic Loads
- Structure Periods
- Reactions
- Displacements
- Force Displacement Curves from Pushover Analysis
- D/C Calculations for Major Main Tower and Truss Members

The Contractor's actual cost for providing the preliminary submittals as described above will be borne equally by the State and the Contractor. Upon receipt of evidence of payment from the Contractor, the division of cost will be made by paying the Contractor one-half of the agreed upon invoice cost, except no markups will be allowed.

Estimated cost of Extra Work at Force Account $25,000.00

Estimated Cost: Increase ☑ Decrease ☐ **$25,000.00**

By reason of this order the time of completion will be adjusted as follows: 0 days

Submitted by

Signature	Resident Engineer: Gary Pursell, P.E., Sup.T.E.	Date 1/30/07

Approval Recommended by

Signature	Construction Engineer: Richard Morrow, P.E., Sup BE	Date 1/30/07

Engineer Approval by

Signature	(Print name and title) Gary Pursell, P.E., Sup.T.E. - Chief	Date 2/15/07

We the undersigned contractor, have given careful consideration to the change proposed and agree, if this proposal is approved, that we will provide all equipment, furnish the materials, except as may otherwise be noted above, and perform all services necessary for the work above specified, and will accept as full payment therefor the prices shown above.

NOTE: If you, the contractor, do not sign acceptance of this order, your attention is directed to the requirements of the specifications as to proceeding with the ordered work and filing a written protest within the time therein specified.

Contractor Acceptance by

Signature	(Print name and title) Michael D. Flowers Project Director	Date 2-1-07

STATE OF CALIFORNIA - DEPARTMENT OF TRANSPORTATION

CONTRACT CHANGE ORDER MEMORANDUM

DATE: 2/14/2007 Page 1 of 1

TO: Pete Siegenthaler, Prin. TE / Gary Pursell, P.E., Sup T.E.

FROM: Gary Pursell, P.E., Sup.T.E.

FILE: E.A. 04 - 0120F4
CO-RTE-PM SF-80-13.2/13.9
FED. NO.

CCO#: 30 | SUPPLEMENT#: 0 | Category Code: CHTX

CONTINGENCY BALANCE (incl. this change) $145,288,830.00

COST: $25,000.00 INCREASE ☑ DECREASE ☐

HEADQUARTERS APPROVAL REQUIRED? ☐ YES ☑ NO

SUPPLEMENTAL FUNDS PROVIDED: $0.00

IS THIS REQUEST IN ACCORDANCE WITH ENVIRONMENTAL DOCUMENTS? ☑ YES ☐ NO

CCO DESCRIPTION:
Prelim Temp Tower Design Submittals

PROJECT DESCRIPTION:
CONSTRUCT SELF-ANCHORED SUSPENSION BRIDGE

Original Contract Time:	Time Adj. This Change:	Previously Approved CCO Time Adjustments:	Percentage Time Adjusted: (including this change)	Total # of Unreconciled Deferred Time CCO(s): (including this change)
2490 Day(s)	0 Day(s)	30 Day(s)	1 %	0

THIS CHANGE ORDER PROVIDES FOR:

Department and the Contractor to share the cost of additional design efforts necessary to provide preliminary temporary tower design submittals.

Preliminary design submittals, which are not required by the contract, will provide advance information for the Department's review such that major technical issues, that might affect member sizes, can be discussed and resolved early. This will enable the Contractor to identify key member sizes and proceed with early mill orders for temporary tower steel. This will greatly reduce the risk of temporary tower design and construction delays. Although temporary tower design and construction is not on the critical path, it is a near critical path activity, and could become critical if delayed. It is in the best interest of both parties to proceed with this additional design effort to reduce the risk of project delays.

On January 8, 2007, the Department agreed, in concept, to participate in compensation for the additional design effort necessary to provide preliminary submittals. The Contractor requested an adjustment of compensation for this additional design effort in correspondence dated January 16, 2007. The additional design effort will benefit both parties by reducing the risk of delay. The Contractor has agreed to share the costs without markups being applied.

The Department's share of this work will be paid for as Extra Work at Force Account for an estimated cost of $25,000, which can be financed from the contingency fund, except that no markups will be allowed.

No time adjustment is warranted, as this change does not affect the controlling operation, but does help reduce the risk of these activities potentially delaying the project.

Project Management concurrence has been acquired for this change order. This CCO does not affect permanent features, therefore Maintenance concurrence is not required.

CONCURRED BY:

Construction Engineer:	Res. Eng., Gary Pursell, Sup. TE	Date	1/30/07
Bridge Engineer:	Struct Rep, Rick Morrow, Sup TE	Date	1/30/07
Project Engineer:	PCE, Pete Siegenthaler, Prin TE	Date	1/30/07
Project Manager:		Date	
FHWA Rep.:		Date	
Environmental:		Date	
Other (specify):	Dep TB Proj Man, Brian Marooney	Date	1/8/07
Other (specify):		Date	
District Prior Approval By:		Date	
HQ (Issue Approve) By:		Date	
Resident Engineer's Signature:	Gary Pursell	Date	2/15/07

ESTIMATE OF COST

	THIS REQUEST	TOTAL TO DATE
ITEMS	$0.00	$0.00
FORCE ACCOUNT	$25,000.00	$25,000.00
AGREED PRICE	$0.00	$0.00
ADJUSTMENT	$0.00	$0.00
TOTAL	$25,000.00	$25,000.00

FEDERAL PARTICIPATION

☐ PARTICIPATING ☐ PARTICIPATING IN PART ☑ NONE
☐ NON-PARTICIPATING (MAINTENANCE) ☐ NON-PARTICIPATING

FEDERAL SEGREGATION (if more than one Funding Source or P.I.P. type)
☑ CCO FUNDED PER CONTRACT ☐ CCO FUNDED AS FOLLOWS

FEDERAL FUNDING SOURCE	PERCENT

ADA Notice: For individuals with sensory disabilities, this document is available in alternate formats. For information call: (916) 654-6410 or TDD (916) 654-3880 or write Records and Forms Management, 1120 N Street, MS-89, Sacramento, CA 95814.

STATE OF CALIFORNIA - DEPARTMENT OF TRANSPORTATION

CONTRACT CHANGE ORDER

Change Requested by: Engineer

CCO: 30	Suppl. No. 0	Contract No. 04 - 0120F4	Road SF-80-13.2/13.9	FED. AID LOC.:

To: **AMERICAN BRIDGE/FLUOR ENTERPRISES INC A JOINT VENT**

You are directed to make the following changes from the plans and specifications or do the following described work not included in the plans and specifications for this contract. ***NOTE: This change order is not effective until approved by the Engineer.***

Description of work to be done, estimate of quantities and prices to be paid. (Segregate between additional work at contract price, agreed price and force account.) Unless otherwise stated, rates for rental of equipment cover only such time as equipment is actually used and no allowance will be made for idle time. This last percentage shown is the net accumulated increase or decrease from the original quantity in the Engineer's Estimate.

Extra Work at Force Account:

Provide compensation to the Contractor for the Preliminary Temporary Tower Design Submittals proposed in ABF correspondence ABF-CAL-LTR-000100, dated January 16, 2007, as provided herein.

Up to two preliminary submittals will be provided; 1) Temporary Towers A - D and 2) Temporary Towers F through the east end of the work. Submittal of preliminary calculations and drawings will be provided for technical overview and comment, and each submittal will include, but will not be limited to:

- Wind Loads
- Live Loads
- Ship Impact Loads
- Seismic Loads
- Structure Periods
- Reactions
- Displacements
- Force Displacement Curves from Pushover Analysis
- D/C Calculations for Major Main Tower and Truss Members

The Contractor's actual cost for providing the preliminary submittals as described above will be borne equally by the State and the Contractor. Upon receipt of evidence of payment from the Contractor, the division of cost will be made by paying the Contractor one-half of the agreed upon invoice cost, except no markups will be allowed.

Estimated cost of Extra Work at Force Account $25,000.00

Estimated Cost: Increase ☑ Decrease ☐ **$25,000.00**

By reason of this order the time of completion will be adjusted as follows: 0 days

Submitted by

Signature	Resident Engineer: Gary Pursell, P.E., Sup.T.E.	Date 1/30/07

Approval Recommended by

Signature	Construction Engineer: Richard Morrow, P.E., Sup BE	Date 1/30/07

Engineer Approval by

Signature	(Print name and title) Gary Pursell, P.E., Sup.T.E. - Chief	Date 2/15/07

We the undersigned contractor, have given careful consideration to the change proposed and agree, if this proposal is approved, that we will provide all equipment, furnish the materials, except as may otherwise be noted above, and perform all services necessary for the work above specified, and will accept as full payment therefor the prices shown above.

NOTE: If you, the contractor, do not sign acceptance of this order, your attention is directed to the requirements of the specifications as to proceeding with the ordered work and filing a written protest within the time therein specified.

Contractor Acceptance by

Signature	(Print name and title) Michael D. Flowers Project Director	Date 2-1-07

STATE OF CALIFORNIA - DEPARTMENT OF TRANSPORTATION

CONTRACT CHANGE ORDER MEMORANDUM

DATE: 2/14/2007 Page 1 of 1

TO: Pete Siegenthaler, Prin. TE / Gary Pursell, P.E., Sup T.E.

FROM: Gary Pursell, P.E., Sup.T.E.

FILE: E.A. 04 - 0120F4
CO-RTE-PM SF-80-13.2/13.9
FED. NO.

CCO#: 30 | SUPPLEMENT#: 0 | Category Code: CHTX

CONTINGENCY BALANCE (incl. this change) $145,288,830.00

COST: $25,000.00 INCREASE ☑ DECREASE ☐

HEADQUARTERS APPROVAL REQUIRED? ☐ YES ☑ NO

SUPPLEMENTAL FUNDS PROVIDED: $0.00

IS THIS REQUEST IN ACCORDANCE WITH ENVIRONMENTAL DOCUMENTS? ☑ YES ☐ NO

CCO DESCRIPTION:
Prelim Temp Tower Design Submittals

PROJECT DESCRIPTION:
CONSTRUCT SELF-ANCHORED SUSPENSION BRIDGE

Original Contract Time:	Time Adj. This Change:	Previously Approved CCO Time Adjustments:	Percentage Time Adjusted: (including this change)	Total # of Unreconciled Deferred Time CCO(s): (including this change)
2490 Day(s)	0 Day(s)	30 Day(s)	1 %	0

THIS CHANGE ORDER PROVIDES FOR:

Department and the Contractor to share the cost of additional design efforts necessary to provide preliminary temporary tower design submittals.

Preliminary design submittals, which are not required by the contract, will provide advance information for the Department's review such that major technical issues, that might affect member sizes, can be discussed and resolved early. This will enable the Contractor to identify key member sizes and proceed with early mill orders for temporary tower steel. This will greatly reduce the risk of temporary tower design and construction delays. Although temporary tower design and construction is not on the critical path, it is a near critical path activity, and could become critical if delayed. It is in the best interest of both parties to proceed with this additional design effort to reduce the risk of project delays.

On January 8, 2007, the Department agreed, in concept, to participate in compensation for the additional design effort necessary to provide preliminary submittals. The Contractor requested an adjustment of compensation for this additional design effort in correspondence dated January 16, 2007. The additional design effort will benefit both parties by reducing the risk of delay. The Contractor has agreed to share the costs without markups being applied.

The Department's share of this work will be paid for as Extra Work at Force Account for an estimated cost of $25,000, which can be financed from the contingency fund, except that no markups will be allowed.

No time adjustment is warranted, as this change does not affect the controlling operation, but does help reduce the risk of these activities potentially delaying the project.

Project Management concurrence has been acquired for this change order. This CCO does not affect permanent features, therefore Maintenance concurrence is not required.

CONCURRED BY:

Construction Engineer:	Res. Eng., Gary Pursell, Sup. TE	Date	1/30/07
Bridge Engineer:	Struct Rep, Rick Morrow, Sup TE	Date	1/30/07
Project Engineer:	PCE, Pete Siegenthaler, Prin TE	Date	1/30/07
Project Manager:		Date	
FHWA Rep.:		Date	
Environmental:		Date	
Other (specify):	Dep TB Proj Man, Brian Marooney	Date	1/8/07
Other (specify):		Date	
District Prior Approval By:		Date	
HQ (Issue Approve) By:		Date	
Resident Engineer's Signature:	Gary Pursell	Date	2/15/07

ESTIMATE OF COST

	THIS REQUEST	TOTAL TO DATE
ITEMS	$0.00	$0.00
FORCE ACCOUNT	$25,000.00	$25,000.00
AGREED PRICE	$0.00	$0.00
ADJUSTMENT	$0.00	$0.00
TOTAL	$25,000.00	$25,000.00

FEDERAL PARTICIPATION

☐ PARTICIPATING ☐ PARTICIPATING IN PART ☑ NONE
☐ NON-PARTICIPATING (MAINTENANCE) ☐ NON-PARTICIPATING

FEDERAL SEGREGATION (if more than one Funding Source or P.I.P. type)
☑ CCO FUNDED PER CONTRACT ☐ CCO FUNDED AS FOLLOWS

FEDERAL FUNDING SOURCE	PERCENT

ADA Notice: For individuals with sensory disabilities, this document is available in alternate formats. For information call: (916) 654-6410 or TDD (916) 654-3880 or write Records and Forms Management, 1120 N Street, MS-89, Sacramento, CA 95814.

STATE OF CALIFORNIA - DEPARTMENT OF TRANSPORTATION

CONTRACT CHANGE ORDER

Change Requested by: Engineer

CCO: 31 **Suppl. No. 0** **Contract No. 04 – 0120F4** **Road** SF-80-13.2/13.9 **FED. AID LOC.:**

To: **AMERICAN BRIDGE/FLUOR ENTERPRISES INC A JOINT VENTURE**

You are directed to make the following changes from the plans and specifications or do the following described work not included in the plans and specifications for this contract. ***NOTE: This change order is not effective until approved by the Engineer.***

Description of work to be done, estimate of quantities and prices to be paid. (Segregate between additional work at contract price, agreed price and force account.) Unless otherwise stated, rates for rental of equipment cover only such time as equipment is actually used and no allowance will be made for idle time. This last percentage shown is the net accumulated increase or decrease from the original quantity in the Engineer's Estimate.

Adjustment of Compensation at Lump Sum:

ITEM 1.

Install additional pipe supports, and reroute both compressed air and water pipes as shown in revised plan sheets. The following revised plan sheets detail all changes in this change order: 41R2, 42R2, 43R2, 44R2, 45R2, 46R3, 47R1, 48R2, 50R1, 51R2, 52R2, 53R3, 54R1, 55R2, 56R2, 57R3, 451R2, 897R1, 926R1, 927R1 and 928R1 (of 1204), as shown on sheets two (2) to twenty-two (22) of this change order.

This change order resolves the costs associated with Contractor Request For Information (RFI) Nos. 116, 189, 218R1, 223, 232, 233R0, 233R1, 233R2, 233R3, 245, 276, 291, 373R0, 389, 403, 404, 480, 482, 485R0, 485R1, 495, 498, 573, 676, 729, 1414R0 and 1414R1 with respect to changes listed above.

For this work, the Contractor will be paid the sum of $1,138,299.00. This sum constitutes full compensation, including markups, for this change.

Adjustment of Compensation at Lump Sum $1,138,299.00

ITEM 2.

The items identified above in this change order have been paid as part of CCO 108S1 resolution. Therefore, the amount due under this change order will be adjusted by the amount paid under CCO 108S1 to prevent a double payment. Total amount paid under CCO 108S1, and to be credited to this change, is $1,138,299.00.

Adjustment of Compensation at Lump Sum ..... <$1,138,299.00>

CHANGE ORDER COST AND TIME SUMMARY

(ITEM 1) Adjustment of Compensation for work pursuant to this change order	$1,138,299.00
(ITEM 2) Amount paid under CCO 108S1 for this change order	<$1,138,299.00>
Total net pay for this change order	$0.00

Contract time is not addressed in CCO 108S1 for work identified in this change order. Therefore, consideration of a time adjustment will be deferred until completion of the work specified herein. Determination of a commensurate time adjustment will be made in accordance with Section 10-1.13, "PROGRESS SCHEDULE (CRITICAL PATH METHOD)" and Section 10-1.14, "TIME-RELATED OVERHEAD" of the Special Provisions, as well as Section 8-1.07, "LIQUIDATED DAMAGES", of the Standard Specifications.

Estimated Cost: Increase ☐ Decrease ☐ $0.00

By reason of this order the time of completion will be adjusted as follows: **Deferred**

Submitted by

Signature **Resident Engineer** William Shedd, Senior T.E. **Date** 6-22-10

Approval Recommended by

Signature for **Supervising Transportation Engineer** Gary Pursell, Sup.T.E. **Date** 6/22/2010

Engineer Approval by

Signature Gary Pursell **Principal Transportation Engineer** Peter Siegenthaler, Prin.T.E. **Date** 6/30/10

We the undersigned contractor, have given careful consideration to the change proposed and agree, if this proposal is approved, that we will provide all equipment, furnish the materials, except as otherwise be noted above, and perform all services necessary for the work above specified, and will accept as full payment therefor the prices shown above.

NOTE: If you, the contractor, do not sign acceptance of this order, your attention is directed to the requirements of the specifications as to proceeding with the ordered work and filing a written protest within the time therein specified.

Contractor Acceptance by

Signature (Print name and title) Michael D. Flowers Project Director **Date** 6-29-10

STATE OF CALIFORNIA - DEPARTMENT OF TRANSPORTATION

CONTRACT CHANGE ORDER MEMORANDUM

TO: Pete Siegenthaler, Prin TE /	FILE: **E.A.** 04 - 0120F4
F. : Gary Pursell, Sup. TE	**CO-RTE-PM** SF-80-13.2/13.9
	FED. NO.
CCO#: **31** SUPPLEMENT#: **0** Category Code: **CHPT**	CONTINGENCY BALANCE (incl. this change) **$35,389,638.40**
COST: **$0.00** INCREASE ☐ DECREASE ☐	HEADQUARTERS APPROVAL REQUIRED? ☑ YES ☐ NO
SUPPLEMENTAL FUNDS PROVIDED: **$0.00**	IS THIS REQUEST IN ACCORDANCE WITH ENVIRONMENTAL DOCUMENTS? ☑ YES ☐ NO
CCO DESCRIPTION: Mechanical Modifications	**PROJECT DESCRIPTION:** CONSTRUCT SELF-ANCHORED SUSPENSION BRIDGE

Original Contract Time:	Time Adj. This Change:	Previously Approved CCO Time Adjustments:	Percentage Time Adjusted: (including this change)	Total # of Unreconciled Deferred Time CCO(s): (including this change)
2490 Day(s)	**DEF** Day(s)	**227** Day(s)	**9** %	~~0~~ 6

THIS CHANGE ORDER PROVIDES FOR:

Installing additional pipe supports and reroute compressed air and water pipes along the bike path, the crossing at the cap beam to the bike path, and to the edge of the support structure as shown on sheets two (2) through twenty-two 22) of the change order.

Through the Contractor Request for Information (RFI) process as well as internal constructability review meetings with the designer, it was determined that rerouting of compressed air and water pipes, including additional pipe supports, are needed along the bike path structure in order to resolve conflicts with other bridge elements.

This work is not covered by any contract items. Therefore, payment for this work will be at Adjustment of Compensation at Lump Sum for the amount of $1,138,299.00. Since the cost, of $1,138,299.00 in this change, is included in Contract Change Order 108 Supplement 1 (CCO 108S1) Claim Settlement Report No. 1 resolution costs the net payment in this change order is zero.

Contract time is not addressed in CCO 108 for work identified in this change order. Therefore, consideration of a time adjustment will be deferred until completion of the work specified herein. Determination of a commensurate time adjustment will be made in accordance with Section 10-1.13, "PROGRESS SCHEDULE (CRITICAL PATH METHOD)" and Section 10-1.14, "TIME-RELATED OVERHEAD" of the Special Provisions, as well as Section 8-1.07, "LIQUIDATED DAMAGES", of the Standard Specifications.

This change order received concurrence from Gary Pursell (Resident Engineer), Rick Morrow (Sup. Structure Rep), Peter Siegenthaler (Principal TE), Rich Foley (HQ Oversight), Ken Terpstra (Project Manager), Richard Land (Chief Engineer), Jon Tapping (HQ Coordinator), Tony Anziano (Toll Bridge Program Manager), Brian Maroney (Project Engineer), Wenyi Long (Design Oversight), and Lina Ellis (Structure Maintenance).

Claims Settlement Report (CSR) No. 1, for this project, revises the authority to "Issue and Approve" the changes listed in CCO 108S1 Appendices A & B. The authority to "Issue and Approve" the changes listed in Appendices A & B for the values of time and money contemplated therein has been delegated to the District for approval and approval of each of these change orders by the Headquarters CCO Desk will not be required. Since this change order is included in CCO 108S1 no Headquarters CCO Desk "Issue and Approve" is required, a copy of CCO 108S1 is attached for reference

ADA Notice: For individuals with sensory disabilities, this document is available in alternate formats. For information call: (916) 654-6410 or TDD (916) 654-3880 or write Records and Forms Management, 1120 N Street, MS-89, Sacramento, CA 95814.

CONCURRED BY:		
Construction Engineer:	Res. Eng., Gary Pursell, Sup. TE	Date 12/21/09
Bridge Engineer:	Struct Rep, Rick Morrow, Sup TE	Date 12/21/09
Project Engineer:		Date
Project Manager:	Proj Manager, Ken Terpstra	Date 12/21/09
FHWA Rep.:		Date
Environmental:		Date
Other (specify):	Chief Engineer, Richard Land	Date 12/21/09
Other (specify):	PCE, Pete Siegenthaler, Prin TE	Date 12/21/09
District Prior Approval By:		Date
HQ (Issue Approve) By:	HQ Bob Molera	Date 12/31/09
Resident Engineer's Signature:		Date
[signature] for Pursell		6/22/2010

ESTIMATE OF COST

	THIS REQUEST	TOTAL TO DATE
ITEMS	$0.00	$0.00
FORCE ACCOUNT	$0.00	$0.00
AGREED PRICE	$0.00	$0.00
ADJUSTMENT	$0.00	$0.00
TOTAL	$0.00	$0.00

FEDERAL PARTICIPATION

☐ PARTICIPATING ☐ PARTICIPATING IN PART ☑ NONE
☐ NON-PARTICIPATING (MAINTENANCE) ☐ NON-PARTICIPATING

FEDERAL SEGREGATION (if more than one Funding Source or P.I.P. type)
☐ CCO FUNDED PER CONTRACT ☐ CCO FUNDED AS FOLLOWS

FEDERAL FUNDING SOURCE	PERCENT

ADA Notice: For individuals with sensory disabilities, this document is available in alternate formats. For information call: (916) 654-6410 or TDD (916) 654-3880 or write Records and Forms Management, 1120 N Street, MS-89, Sacramento, CA 95814.

DIST	COUNTY	ROUTE	KILOMETER POST TOTAL PROJECT	SHEET No	TOTAL SHEETS
04	SF	80	13.2/13.9	41R2	1204

Bobby J. Melvin 12/19/2002
REGISTERED MECHANICAL ENGINEER DATE

12-6-04
PLANS APPROVAL DATE

REGISTERED PROFESSIONAL ENGINEER Bobby J. Melvin No. 28585 Exp. 6/30/09 MECHANICAL STATE OF CALIFORNIA

PARSONS BRINCKERHOFF QUADE & DOUGLAS, INC.
303 SECOND STREET, SUITE 700 N
SAN FRANCISCO, CA 94107

The State of California or its officers or agents shall not be responsible for the accuracy or completeness of electronic copies of this plan sheet.

To get to the web site, go to http://www.dot.ca.gov

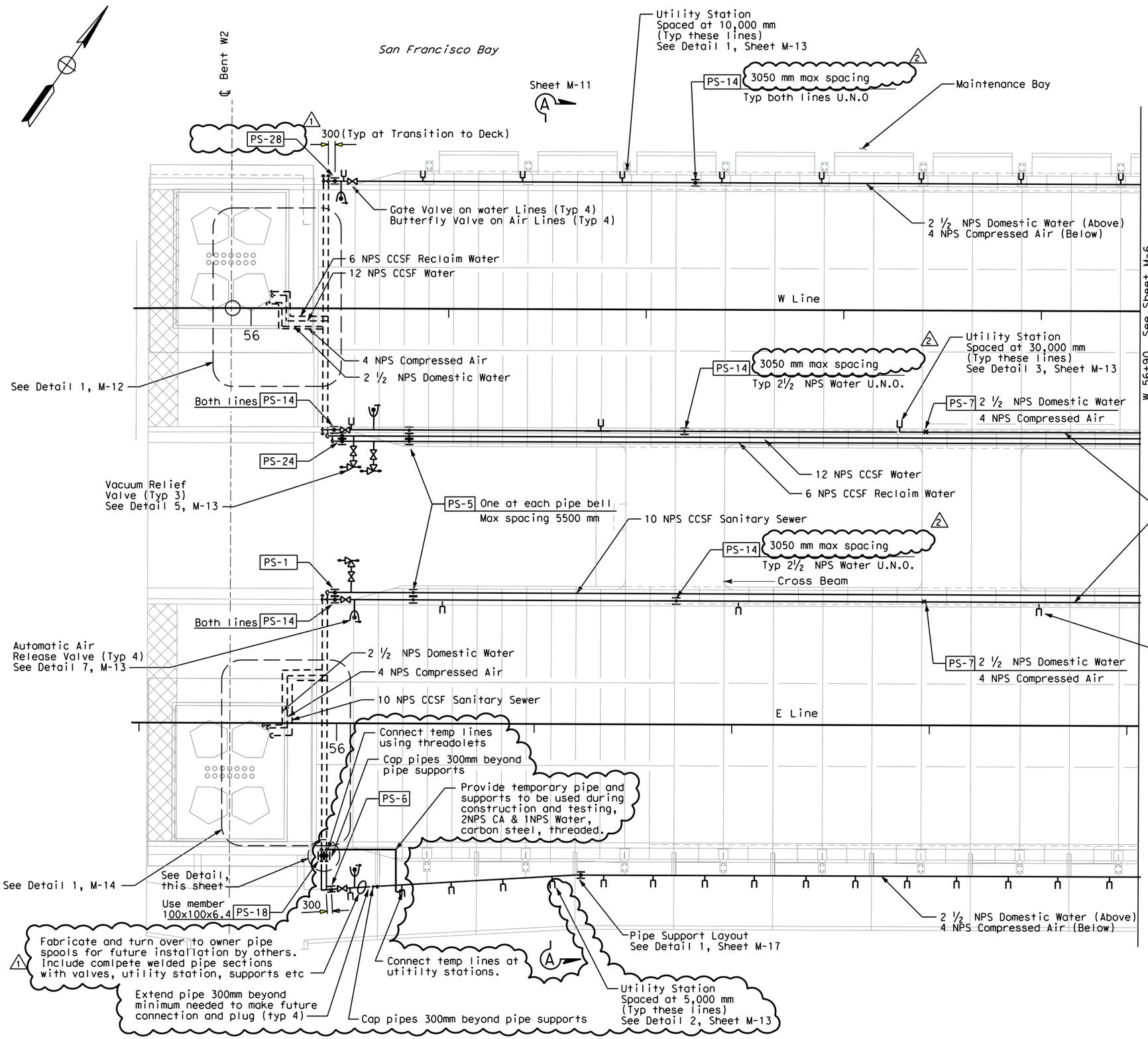

NOTE:

All Stationing are in meters.

REQUEST FOR INFORMATION NOT ADDRESSED IN THIS CCO REMAIN IN FORCE					
2	1/18/08	MECHANICAL MODIFICATIONS	VY	BM	31
1	9/05/07	MECHANICAL MODIFICATIONS	BM	RM	31
MARK	DATE	DESCRIPTIONS	BY	CH'D	CCO#
		REVISIONS			

CONTRACT CHANGE ORDER NO. _____
SHEET _____ OF _____

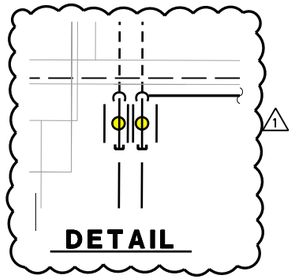

ALL DIMENSIONS ARE IN MILLIMETERS UNLESS OTHERWISE SHOWN.

MAIN SPAN STRUCTURE PIPING PLAN

SCALE: 1:200

M-5

DATE	REVISED BY	DATE	REVISED
BM	10/31/02	KH	11/15/02

CALCULATED/DESIGNED BY BM
CHECKED BY KH

PROJECT ENGINEER Rich Newell

STATE OF CALIFORNIA - DEPARTMENT OF TRANSPORTATION
Caltrans

LAST REVISION 00-00-00
DATE PLOTTED => 2/26/2008
TIME PLOTTED => 8:53:56 AM

FOR REDUCED PLANS ORIGINAL SCALE IS IN MILLIMETERS 0 20 40 60 80

USERNAME => reyesl
DGN FILE => T:\13103\MS\pse\SAS Struc\CCO\SAS CCO31\ISSUED 1-18-08\04-0120F1_0041R02.dgn

CU 04251

EA 0120F1

DIST	COUNTY	ROUTE	KILOMETER POST TOTAL PROJECT	SHEET No	TOTAL SHEETS
04	SF	80	13.2/13.9	42R2	1204

Bobby J. Melvin 12/19/2002
REGISTERED MECHANICAL ENGINEER DATE

12-6-04
PLANS APPROVAL DATE

REGISTERED PROFESSIONAL ENGINEER
Bobby J. Melvin
No. 28585
Exp. 6/30/09
MECHANICAL
STATE OF CALIFORNIA

PARSONS BRINCKERHOFF QUADE & DOUGLAS, INC.
303 SECOND STREET, SUITE 700 N
SAN FRANCISCO, CA 94107

The State of California or its officers or agents shall not be responsible for the accuracy or completeness of electronic copies of this plan sheet.

To get to the web site, go to http://www.dot.ca.gov

Caltrans Metric

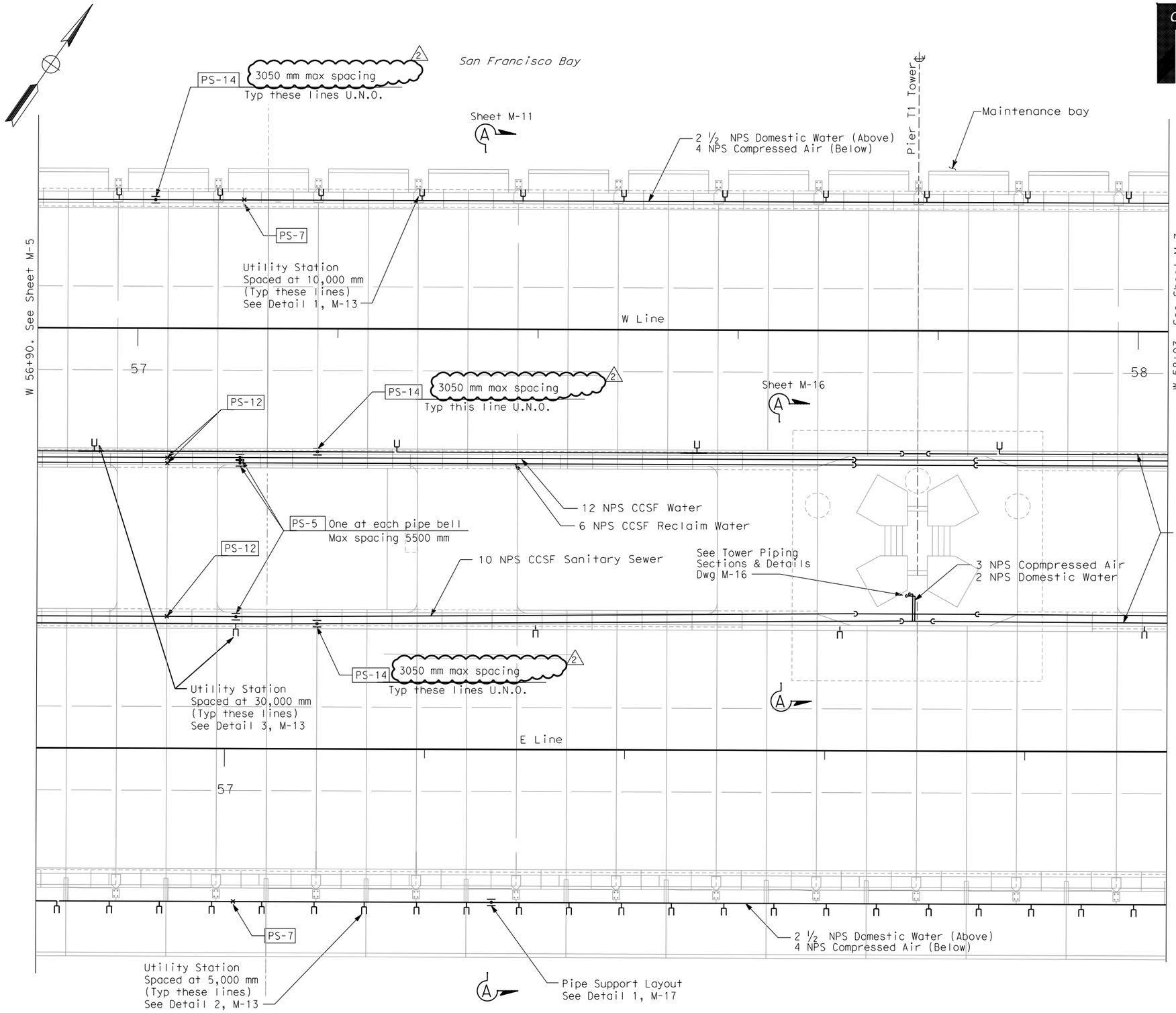

NOTES:

1. All Stationing are in meters.
2. No △1 mark numbers used on this sheet for CCO 31

REQUEST FOR INFORMATION NOT ADDRESSED IN THIS CCO REMAIN IN FORCE					
△2	1/18/08	MECHANICAL MODIFICATIONS	VY	BM	31
△1	9/05/07	MECHANICAL MODIFICATIONS	BM	RM	31
MARK	DATE	DESCRIPTIONS	BY	CH'D	CCO#
REVISIONS					

CONTRACT CHANGE ORDER NO._____
SHEET _____ OF _____

ALL DIMENSIONS ARE IN
MILLIMETERS UNLESS OTHERWISE SHOWN

MAIN SPAN STRUCTURE PIPING PLAN

SCALE: 1:200

M-6

CALCULATED/ DESIGNED BY	BM	DATE 10/31/02	REVISED BY
CHECKED BY	KH	11/15/02	DATE REVISED

PROJECT ENGINEER Rich Newell

STATE OF CALIFORNIA - DEPARTMENT OF TRANSPORTATION
Caltrans

LAST REVISION 00-00-00
DATE PLOTTED => 2/29/2008
TIME PLOTTED => 3:09:58 PM

FOR REDUCED PLANS ORIGINAL SCALE IS IN MILLIMETERS 0 20 40 60 80

USERNAME => reyesl
DGN FILE => T:\13103\MS\pse\SAS Struc\CCO\SAS CCO31\ISSUED 1-18-08\04-012OF1_0042R02.dgn

CU 04251

EA 012OF1

DIST	COUNTY	ROUTE	KILOMETER POST TOTAL PROJECT	SHEET No	TOTAL SHEETS
04	SF	80	13.2/13.9	43R2	1204

Bobby J. Melvin 12/19/2002
REGISTERED MECHANICAL ENGINEER DATE

12-6-04
PLANS APPROVAL DATE

REGISTERED PROFESSIONAL ENGINEER
Bobby J. Melvin
No. 28685
Exp. 6/30/09
MECHANICAL
STATE OF CALIFORNIA

PARSONS BRINCKERHOFF QUADE & DOUGLAS, INC.
303 SECOND STREET, SUITE 700 N
SAN FRANCISCO, CA 94107

The State of California or its officers or agents shall not be responsible for the accuracy or completeness of electronic copies of this plan sheet.

To get to the web site, go to http://www.dot.ca.gov

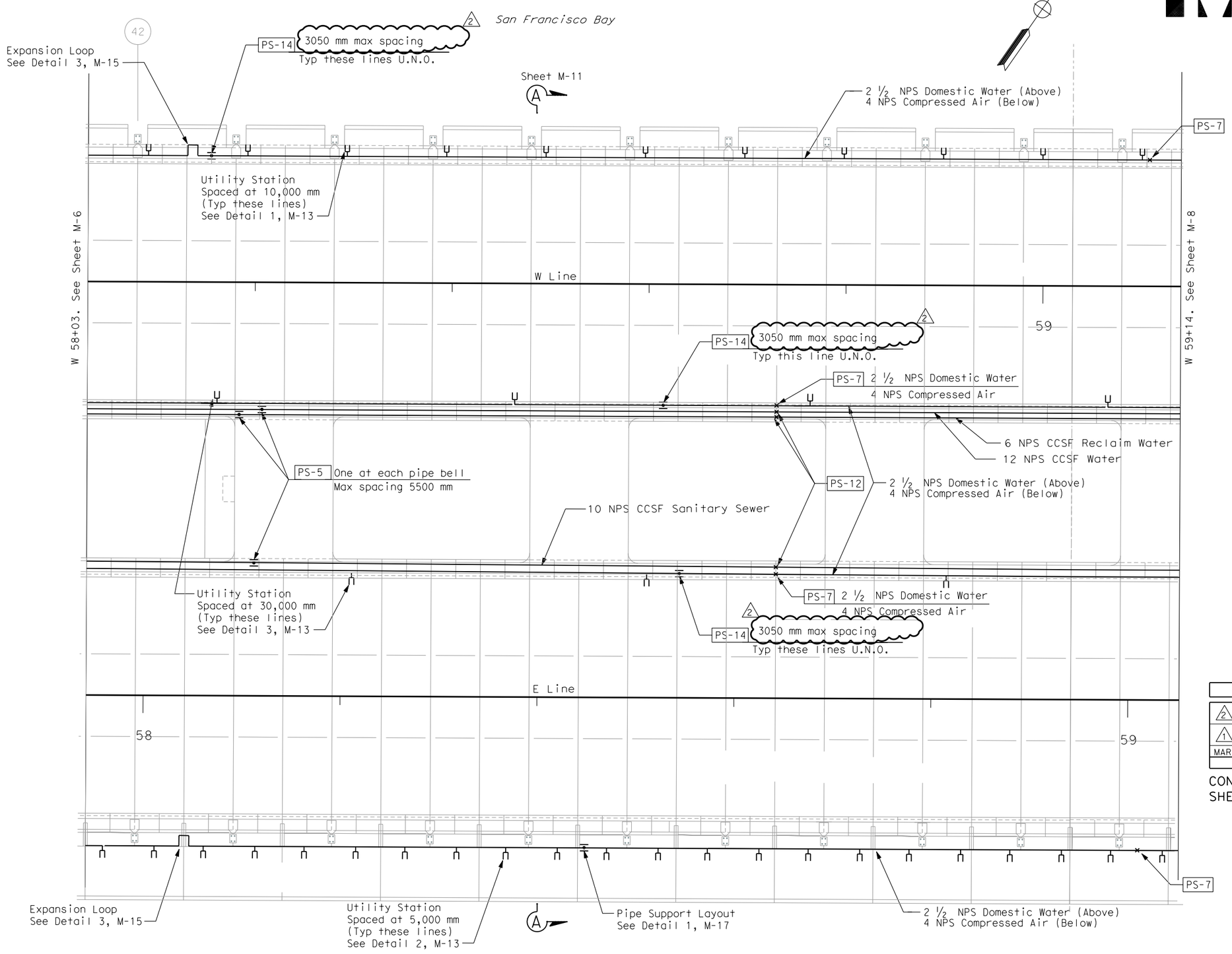

NOTES:

1. All Stationing are in meters.
2. No 1 mark numbers used on this sheet for CCO 31

REQUEST FOR INFORMATION NOT ADDRESSED IN THIS CCO REMAIN IN FORCE

MARK	DATE	DESCRIPTIONS	BY	CH'D	CCO#
2	1/18/08	MECHANICAL MODIFICATIONS	VY	BM	31
1	9/05/07	MECHANICAL MODIFICATIONS	BM	RM	31

REVISIONS

CONTRACT CHANGE ORDER NO._____
SHEET _____ OF _____

ALL DIMENSIONS ARE IN MILLIMETERS UNLESS OTHERWISE SHOWN

MAIN SPAN STRUCTURE PIPING PLAN

SCALE: 1:200

M-7

DATE	REVISED BY	DATE REVISED
10/31/02	BM	11/15/02 KH

CALCULATED/DESIGNED BY
CHECKED BY

PROJECT ENGINEER
Rich Newell

STATE OF CALIFORNIA - DEPARTMENT OF TRANSPORTATION
Caltrans

LAST REVISION 00-00-00
DATE PLOTTED => 2/29/2008
TIME PLOTTED => 3:10:21 PM

FOR REDUCED PLANS ORIGINAL SCALE IS IN MILLIMETERS 0 20 40 60 80

USERNAME => reyesl
DGN FILE => T:\13103\MS\pse\SAS Struc\CCO\SAS CCO31\ISSUED 1-18-08\04-0120F1_0043R02.dgn

CU 04251 EA 0120F1

DIST	COUNTY	ROUTE	KILOMETER POST TOTAL PROJECT	SHEET No	TOTAL SHEETS
04	SF	80	13.2/13.9	44R2	1204

Bobby J. Melvin 12/19/2002
REGISTERED MECHANICAL ENGINEER DATE

12-6-04
PLANS APPROVAL DATE

REGISTERED PROFESSIONAL ENGINEER
Bobby J. Melvin
No. 28685
Exp. 6/30/09
MECHANICAL
STATE OF CALIFORNIA

PARSONS BRINCKERHOFF QUADE & DOUGLAS, INC.
303 SECOND STREET, SUITE 700 N
SAN FRANCISCO, CA 94107

The State of California or its officers or agents shall not be responsible for the accuracy or completeness of electronic copies of this plan sheet.

To get to the web site, go to http://www.dot.ca.gov

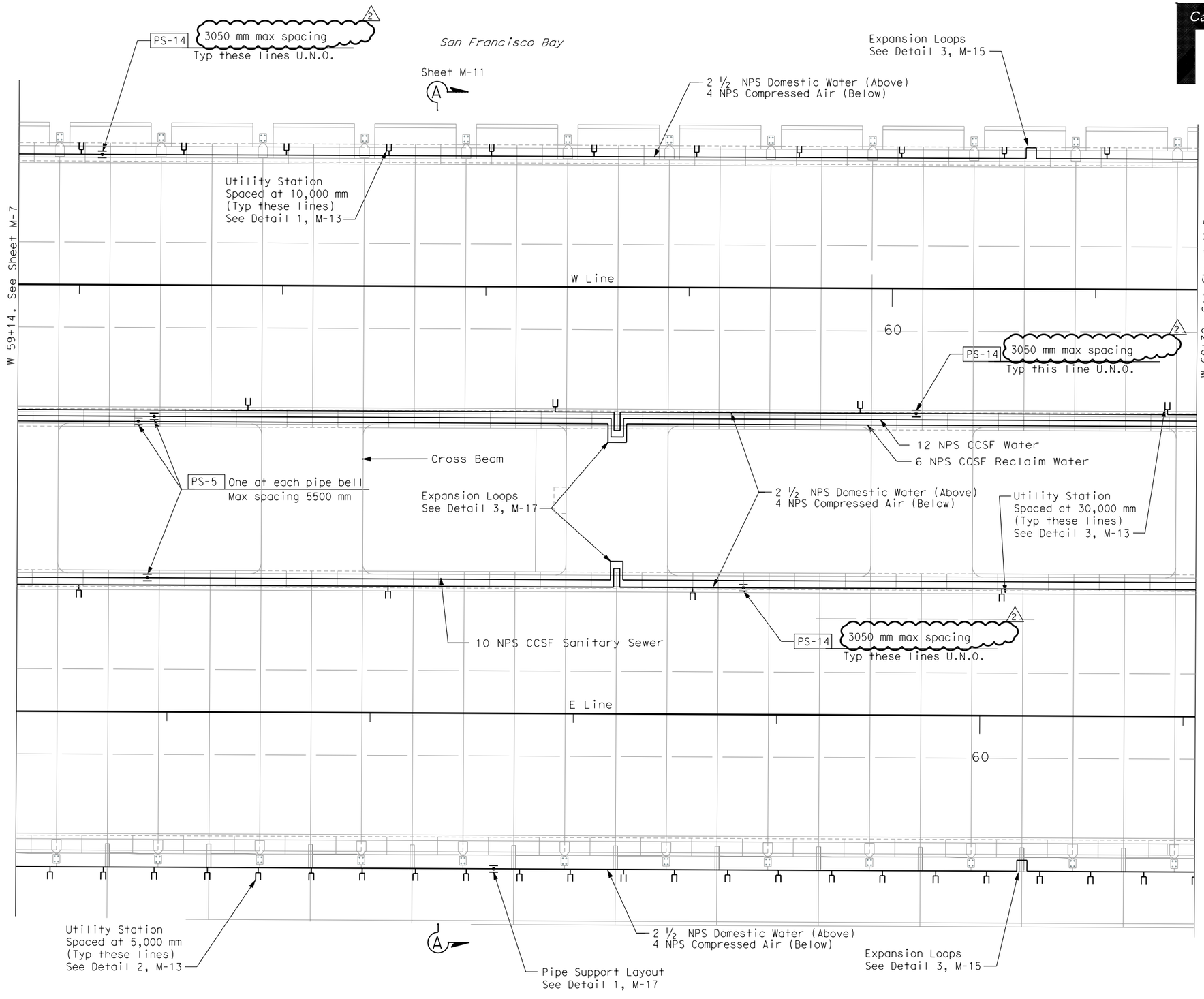

NOTES:

1. All Stationing are in meters.
2. No 1 mark numbers used on this sheet for CCO 31

REQUEST FOR INFORMATION NOT ADDRESSED IN THIS CCO REMAIN IN FORCE					
2	1/18/07	MECHANICAL MODIFICATIONS	VY	BM	31
1	9/05/07	MECHANICAL MODIFICATIONS	BM	RM	31
MARK	DATE	DESCRIPTIONS	BY	CH'D	CCO#
		REVISIONS			

CONTRACT CHANGE ORDER NO._____
SHEET _____ OF _____

ALL DIMENSIONS ARE IN MILLIMETERS UNLESS OTHERWISE SHOWN

MAIN SPAN STRUCTURE PIPING PLAN

SCALE: 1:200

M-8

CALCULATED/DESIGNED BY	BM	DATE 10/31/02	REVISED BY
CHECKED BY	KH	11/15/02	DATE REVISED

PROJECT ENGINEER: Rich Newell

STATE OF CALIFORNIA - DEPARTMENT OF TRANSPORTATION
Caltrans

LAST REVISION 00-00-00
DATE PLOTTED => 2/29/2008
TIME PLOTTED => 3:10:39 PM

FOR REDUCED PLANS ORIGINAL SCALE IS IN MILLIMETERS 0 20 40 60 80

USERNAME => reyesl
DGN FILE => T:\13103\MS\pse\SAS Struc\CCO\SAS CCO31\ISSUED 1-18-08\04-0120F1_0044R02.dgn

CU 04251 EA 0120F1

DIST	COUNTY	ROUTE	KILOMETER POST TOTAL PROJECT	SHEET No	TOTAL SHEETS
04	SF	80	13.2/13.9	45R2	1204

Bobby J. Melvin 12/19/2002
REGISTERED MECHANICAL ENGINEER DATE

12-6-04
PLANS APPROVAL DATE

REGISTERED PROFESSIONAL ENGINEER Bobby J. Melvin No. 28685 Exp. 6/30/09 MECHANICAL STATE OF CALIFORNIA

PARSONS BRINCKERHOFF QUADE & DOUGLAS, INC.
303 SECOND STREET, SUITE 700 N
SAN FRANCISCO, CA 94107

The State of California or its officers or agents shall not be responsible for the accuracy or completeness of electronic copies of this plan sheet.

To get to the web site, go to http://www.dot.ca.gov

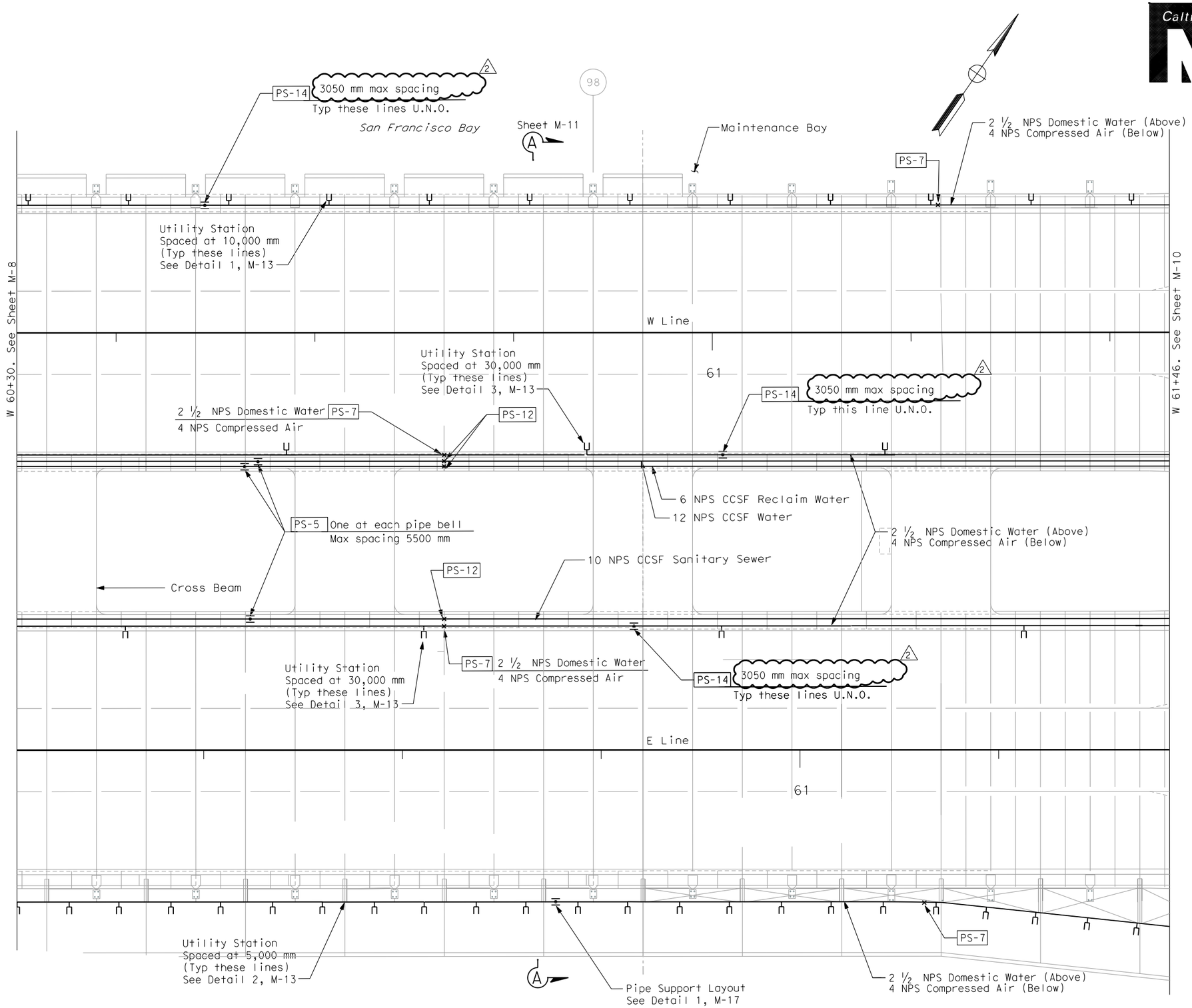

NOTES:

1. All Stationing are in meters.
2. No 1 mark numbers used on this sheet for CCO 31

REQUEST FOR INFORMATION NOT ADDRESSED IN THIS CCO REMAIN IN FORCE

MARK	DATE	DESCRIPTIONS	BY	CH'D	CCO#
2	1/18/08	MECHANICAL MODIFICATIONS	VY	BM	31
1	9/05/07	MECHANICAL MODIFICATIONS	BM	RM	31

REVISIONS

CONTRACT CHANGE ORDER NO._____
SHEET _____ OF _____

ALL DIMENSIONS ARE IN MILLIMETERS UNLESS OTHERWISE SHOWN

MAIN SPAN STRUCTURE PIPING PLAN

SCALE: 1:200

M-9

	DATE	REVISED BY	DATE	REVISED
CALCULATED/DESIGNED BY	BM	10/31/02		
CHECKED BY	KH	11/15/02		

PROJECT ENGINEER Rich Newell

STATE OF CALIFORNIA - DEPARTMENT OF TRANSPORTATION

Caltrans

DATE PLOTTED => 2/29/2008
TIME PLOTTED => 3:10:56 PM

LAST REVISION 00-00-00

FOR REDUCED PLANS ORIGINAL SCALE IS IN MILLIMETERS 0 20 40 60 80

USERNAME => reyesl
DGN FILE => T:\13103\MS\pse\SAS Struc\CCO\SAS CCO31\ISSUED 1-18-08\04-0425F1_0045R02.dgn

EA 0120F1

DIST	COUNTY	ROUTE	KILOMETER POST TOTAL PROJECT	SHEET No	TOTAL SHEETS
04	SF	80	13.2/13.9	46R3	1204

Bobby J. Melvin 12/19/2002
REGISTERED MECHANICAL ENGINEER DATE

126-04
PLANS APPROVAL DATE

REGISTERED PROFESSIONAL ENGINEER
Bobby J. Melvin
No. 28685
Exp. 6/30/09
MECHANICAL
STATE OF CALIFORNIA

PARSONS BRINCKERHOFF QUADE & DOUGLAS, INC.
303 SECOND STREET, SUITE 700 N
SAN FRANCISCO, CA 94107

The State of California or its officers or agents shall not be responsible for the accuracy or completeness of electronic copies of this plan sheet.

Caltrans now has a web site! To get to the web site, go to http://www.dot.ca.gov

Caltrans Metric

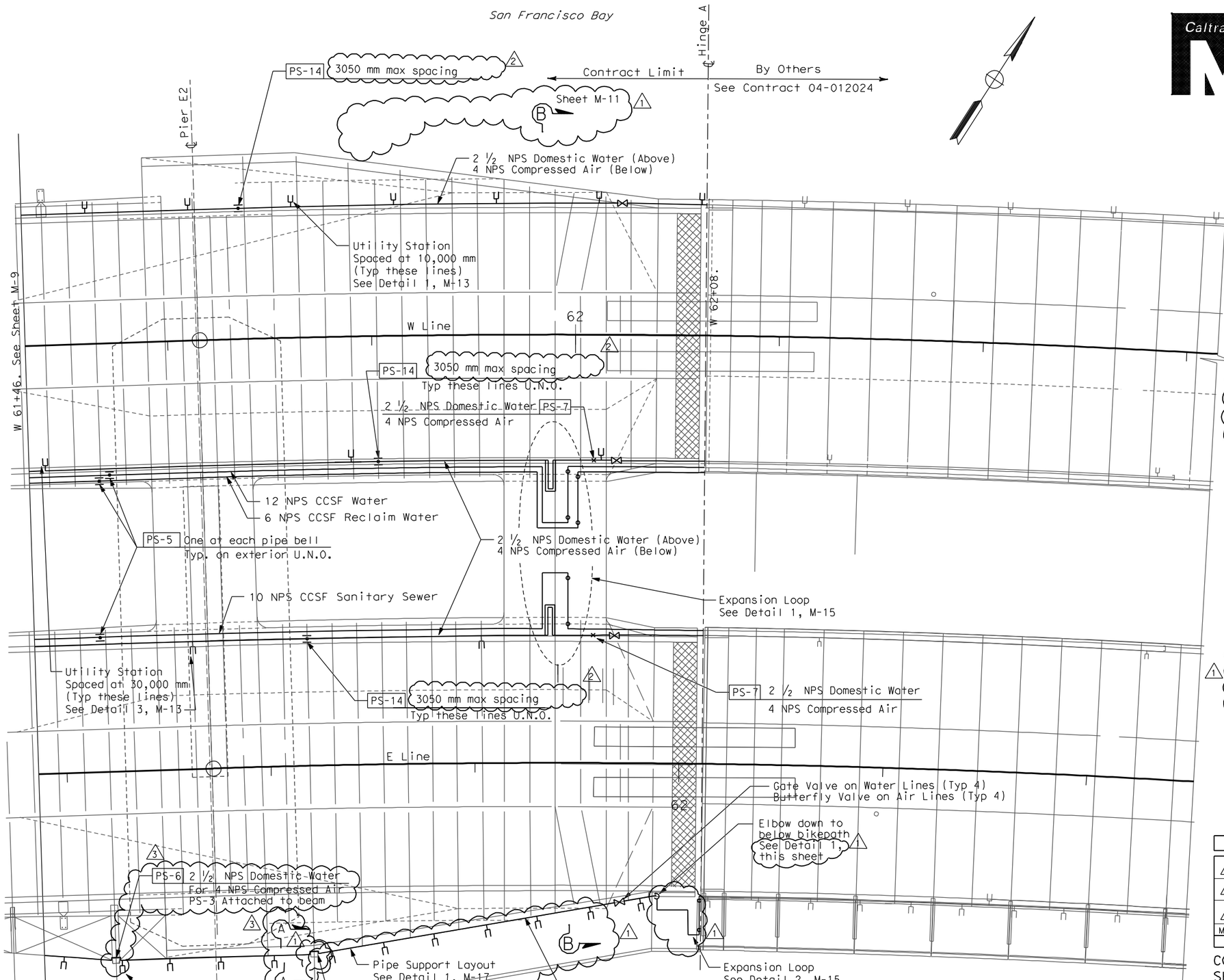

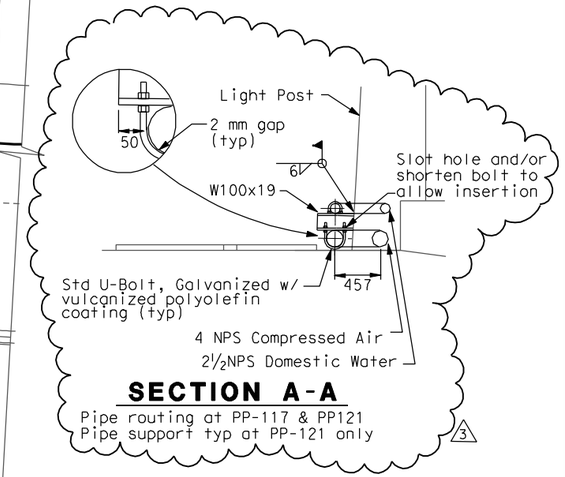

SECTION A-A

Pipe routing at PP-117 & PP121
Pipe support typ at PP-121 only

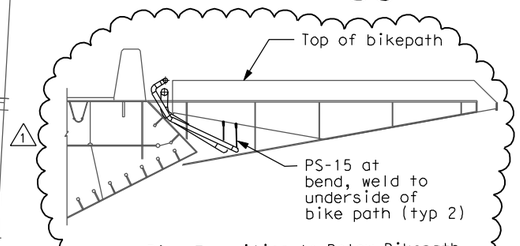

Pipe Transition to Below Bikepath

DETAIL 1 -

REQUEST FOR INFORMATION NOT ADDRESSED IN THIS CCO REMAIN IN FORCE

MARK	DATE	DESCRIPTIONS	BY	CH'D	CCO#
3	8/12/08	MECHANICAL MODIFICATIONS	VY	BM	31
2	1/18/08	MECHANICAL MODIFICATIONS	VY	BM	31
1	9/05/07	MECHANICAL MODIFICATIONS	BM	RM	31

REVISIONS

CONTRACT CHANGE ORDER NO._____
SHEET _____ OF _____

MAIN SPAN STRUCTURE PIPING PLAN

SCALE: 1:200

M-10

ALL DIMENSIONS IN MILIMETERS UNLESS OTHERWISE SHOWN

STATE OF CALIFORNIA - DEPARTMENT OF TRANSPORTATION
Caltrans

PROJECT ENGINEER Rich Newell

CALCULATED/DESIGNED BY BM DATE 10/31/02 REVISED BY
CHECKED BY KH 11/15/02 DATE REVISED

LAST REVISION 00-00-00
DATE PLOTTED => 8/18/2008
TIME PLOTTED => 8:49:57 AM

FOR REDUCED PLANS ORIGINAL SCALE IS IN MILLIMETERS 0 20 40 60 80

USERNAME => llorico
DGN FILE => T:\13103\MS\pse\SAS Struc\CCO\SAS CCO31\ISSUED 08-14-2008\04-0120f1_0046R03.dgn

CU 04251 EA 0120F1

DIST	COUNTY	ROUTE	KILOMETER POST TOTAL PROJECT	SHEET No	TOTAL SHEETS
04	SF	80	13.2/13.9	47R1	1204

Caltrans Metric

Bobby J. Melvin 12/19/2002
REGISTERED MECHANICAL ENGINEER DATE

12-6-04
PLANS APPROVAL DATE

REGISTERED PROFESSIONAL ENGINEER
Bobby J. Melvin
No. 28685
Exp. 6/30/09
MECHANICAL
STATE OF CALIFORNIA

PARSONS BRINCKERHOFF QUADE & DOUGLAS, INC.
303 SECOND STREET, SUITE 700 N
SAN FRANCISCO, CA 94107

The State of California or its officers or agents shall not be responsible for the accuracy or completeness of electronic copies of this plan sheet.

Caltrans now has a web site! To get to the web site, go to http://www.dot.ca.gov

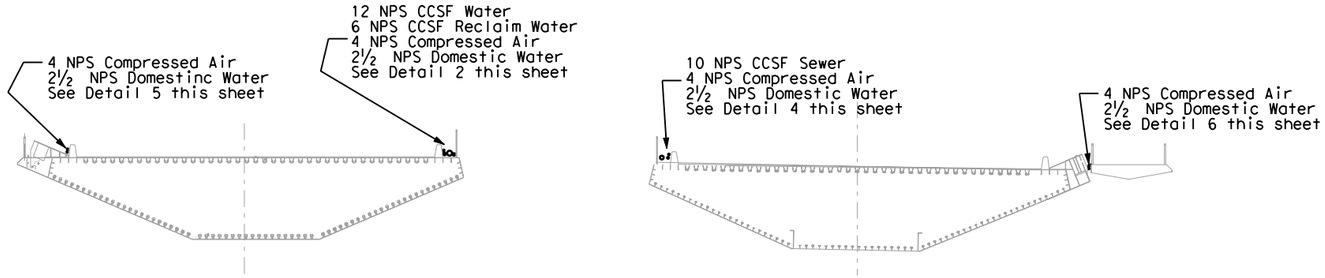

SECTION A M-5 thru M-10

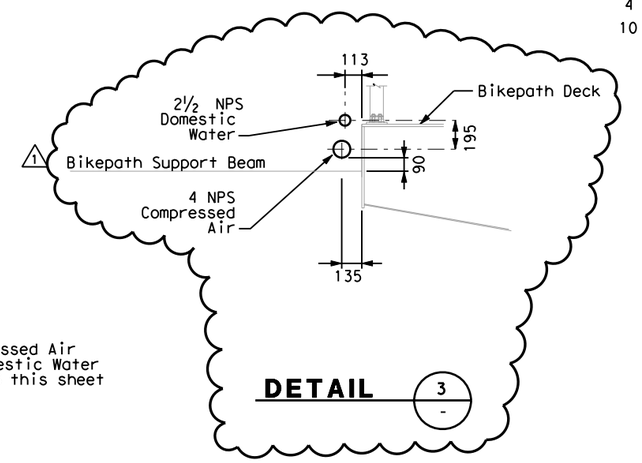

DETAIL 3

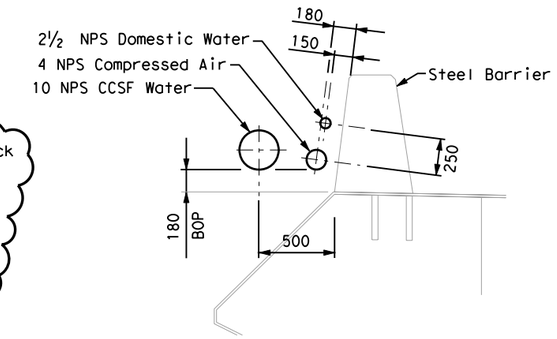

DETAIL 4

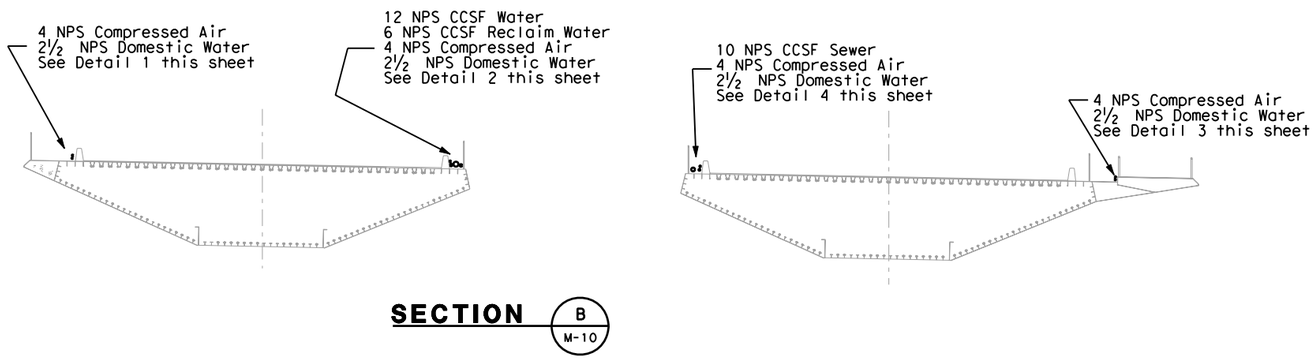

SECTION B M-10

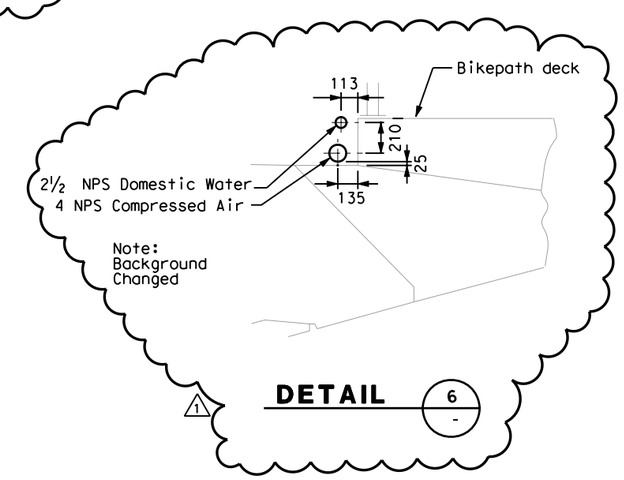

DETAIL 6

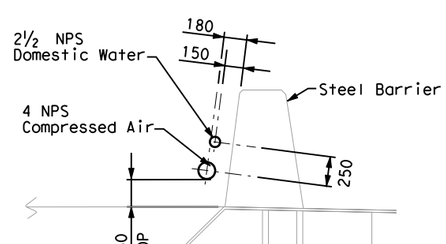

DETAIL 1

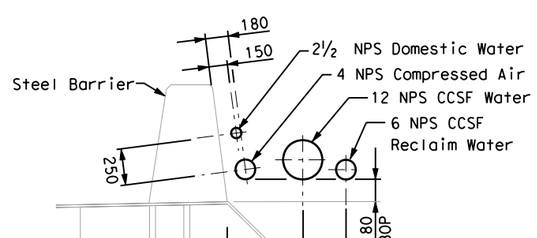

DETAIL 2

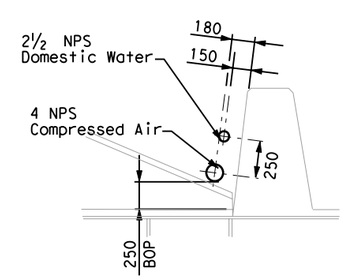

DETAIL 5

REQUEST FOR INFORMATION NOT ADDRESSED IN THIS CCO REMAIN IN FORCE					
1	9/05/07	MECHANICAL MODIFICATIONS	BM	RM	31
MARK	DATE	DESCRIPTIONS	BY	CH'D	CCO#
		REVISIONS			

CONTRACT CHANGE ORDER NO._____
SHEET _____ OF _____

MECHANICAL PIPING SECTIONS AND DETAILS NO. 1

NO SCALE

M-11

ALL DIMENSIONS IN MILLIMETERS UNLESS OTHERWISE SHOWN

DATE	REVISED BY	DATE	REVISED BY
10/31/02	BM	11/15/02	KH

CALCULATED/DESIGNED BY
CHECKED BY

PROJECT ENGINEER Rich Newell

STATE OF CALIFORNIA - DEPARTMENT OF TRANSPORTATION
Caltrans

LAST REVISION 00-00-00
DATE PLOTTED => 2/26/2008
TIME PLOTTED => 11:12:35 AM

FOR REDUCED PLANS ORIGINAL SCALE IS IN MILLIMETERS 0 20 40 60 80

USERNAME => reyesl
DGN FILE => T:\13103\MS\pse\SAS Struc\CCO\SAS CCO31\ISSUED 2-25-08\04-012011_0047R01.dgn

CU 04251

EA 0120F1

DIST	COUNTY	ROUTE	KILOMETER POST TOTAL PROJECT	SHEET No	TOTAL SHEETS
04	SF	80	13.2/13.9	48R2	1204

Bobby J. Melvin 12/19/2002
REGISTERED MECHANICAL ENGINEER DATE

12-6-04
PLANS APPROVAL DATE

REGISTERED PROFESSIONAL ENGINEER Bobby J. Melvin No. 28585 Exp. 6/30/09 MECHANICAL STATE OF CALIFORNIA

PARSONS BRINCKERHOFF QUADE & DOUGLAS, INC.
303 SECOND STREET, SUITE 700 N
SAN FRANCISCO, CA 94107

The State of California or its officers or agents shall not be responsible for the accuracy or completeness of electronic copies of this plan sheet.

Caltrans now has a web site! To get to the web site, go to http://www.dot.ca.gov

Note:

1. Concrete embeds for pipe supports on Pier W-2 E & W provided by others (bottom of rises to elev. 47 M).

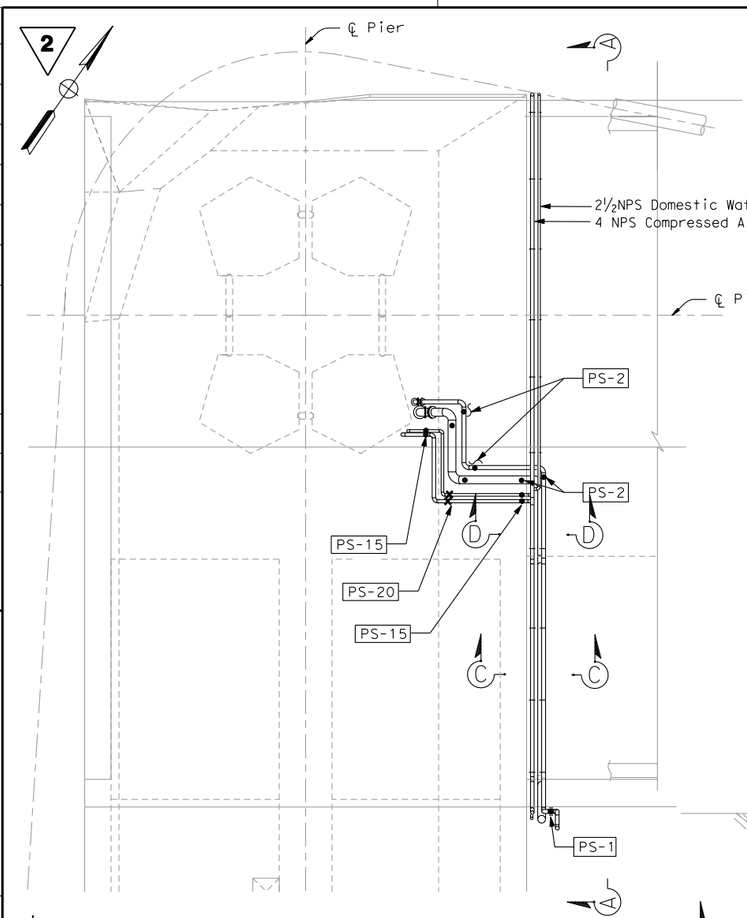

PIER W-2, WEST BOUND

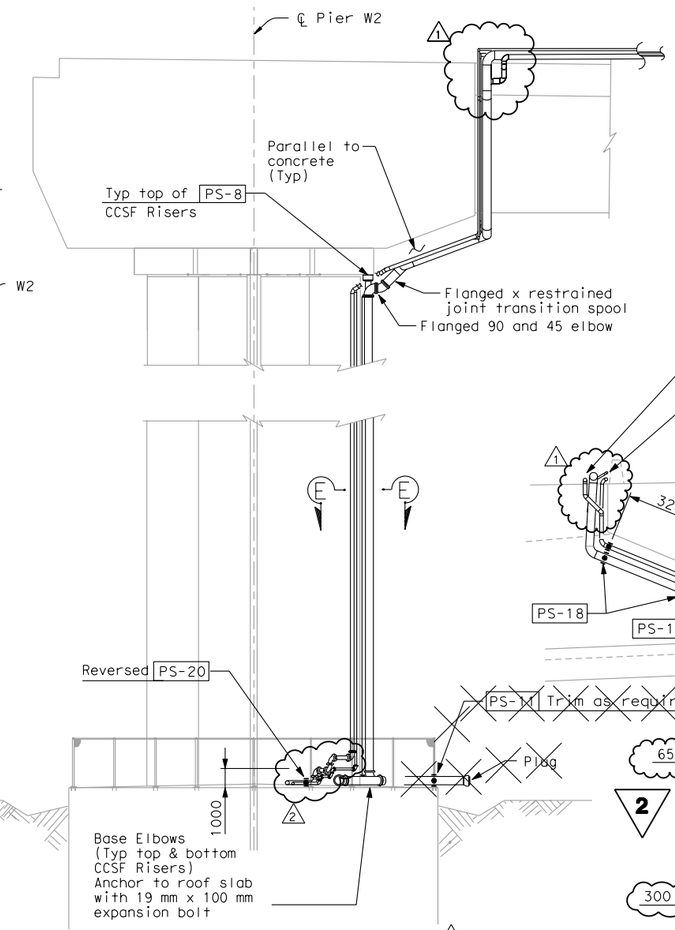

SECTION B-B

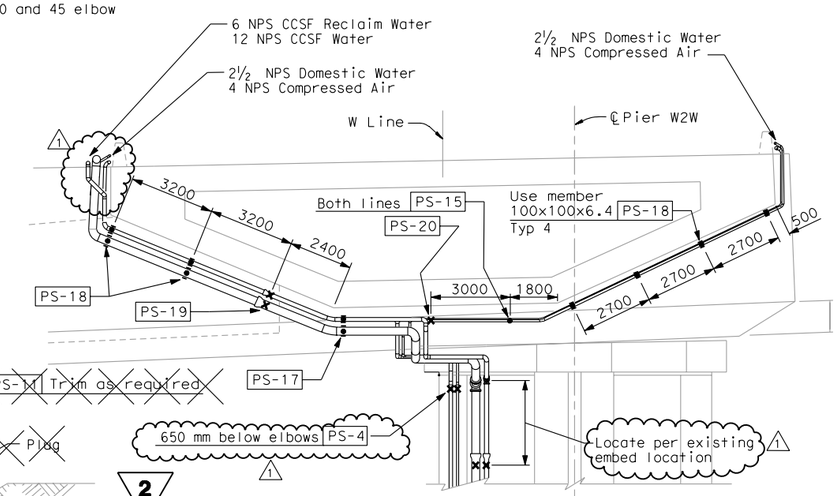

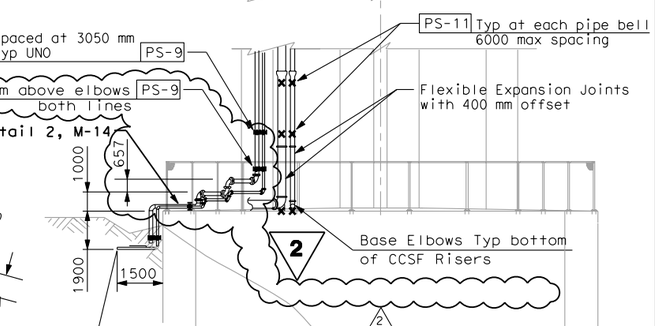

SECTION A-A

See Section C-C Dwg M-14 for Eastbound

DETAIL 1 / M-5

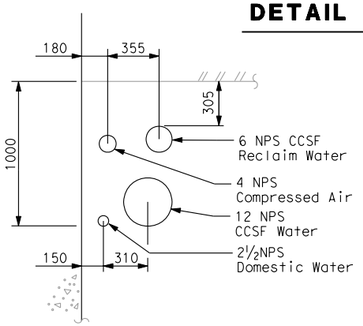

SECTION C-C

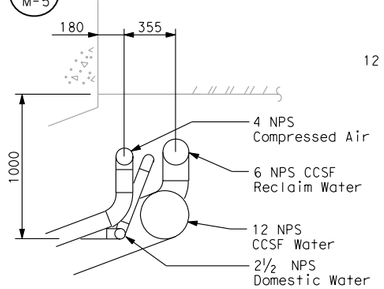

SECTION D-D

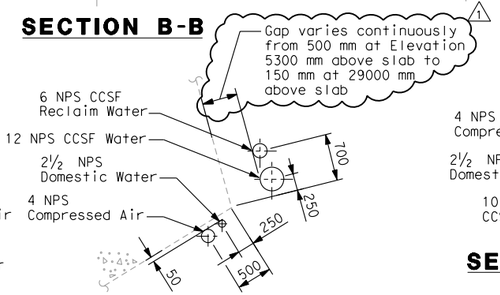

SECTION E-E

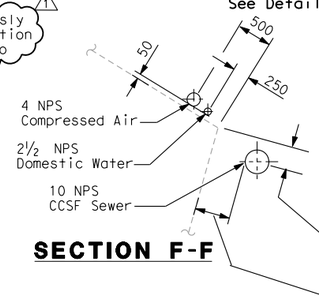

SECTION F-F

Gap varies continuously from 500 mm at Elevation 5300 mm above slab to 150 mm at 29000 mm above slab

2 REVISED PER ADDENDUM NO. 2 DATED SEPTEMBER 29, 2005

MARK	DATE	DESCRIPTIONS	BY	CH'D	CCO#
2	1/18/08	MECHANICAL MODIFICATIONS	VY	BM	31
1	9/05/07	MECHANICAL MODIFICATIONS	BM	RM	31

REQUEST FOR INFORMATION NOT ADDRESSED IN THIS CCO REMAIN IN FORCE

REVISIONS

CONTRACT CHANGE ORDER NO._____
SHEET_____ OF_____

ALL DIMENSIONS IN MILLIMETERS UNLESS OTHERWISE SHOWN

MECHANICAL PIPING SECTIONS AND DETAILS No. 2

NO SCALE

M-12

DATE	REVISED BY	DATE	REVISED BY
10/31/02	BM	11/15/02	KH

CALCULATED/DESIGNED BY
CHECKED BY

PROJECT ENGINEER Rich Newell

STATE OF CALIFORNIA - DEPARTMENT OF TRANSPORTATION
Caltrans

LAST REVISION 00-00-00
DATE PLOTTED => 8/MAY/2008
TIME PLOTTED => @5:MB:26 PM

FOR REDUCED PLANS ORIGINAL SCALE IS IN MILLIMETERS 0 20 40 60 80

USERNAME => reyesl
DGN FILE => T:\13103\MS\pse\SAS Struc\CCO\SAS CCO31\ISSUED 1-18-08\04-0120F1_0048R02.dgn

CU 04251 EA 0120F1

DIST	COUNTY	ROUTE	KILOMETER POST TOTAL PROJECT	SHEET No	TOTAL SHEETS
04	SF	80	13.2/13.9	50R1	1204

Bobby J. Melvin 12/19/2002
REGISTERED MECHANICAL ENGINEER DATE

12-6-04
PLANS APPROVAL DATE

REGISTERED PROFESSIONAL ENGINEER Bobby J. Melvin No. 28685 Exp. 6/30/09 MECHANICAL STATE OF CALIFORNIA

PARSONS BRINCKERHOFF QUADE & DOUGLAS, INC.
303 SECOND STREET, SUITE 700 N
SAN FRANCISCO, CA 94107

The State of California or its officers or agents shall not be responsible for the accuracy or completeness of electronic copies of this plan sheet.

Caltrans now has a web site! To get to the web site, go to http://www.dot.ca.gov

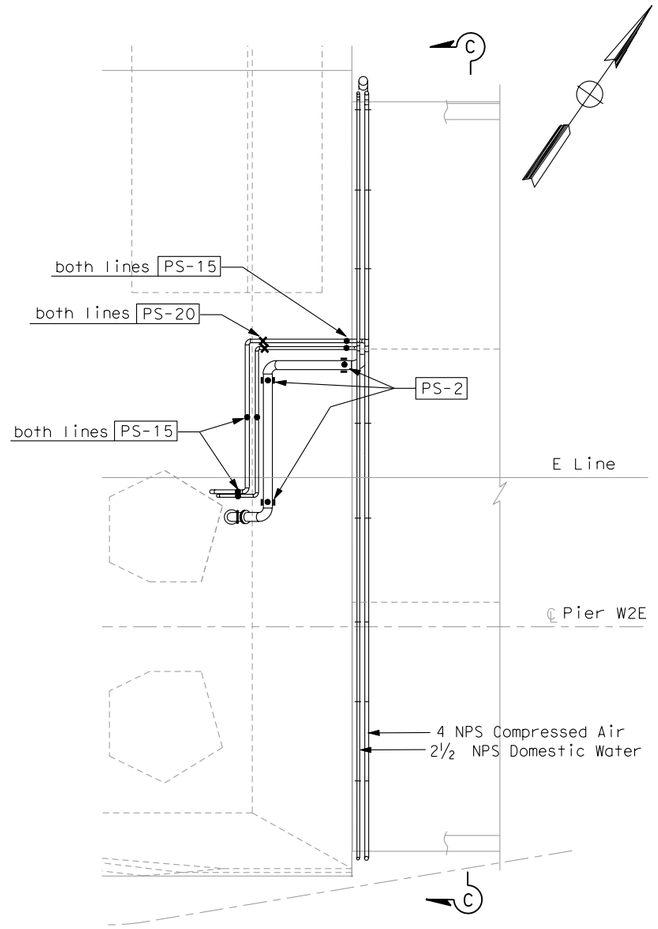

PIER W-2, EAST BOUND

DETAIL 1 / M-5

2

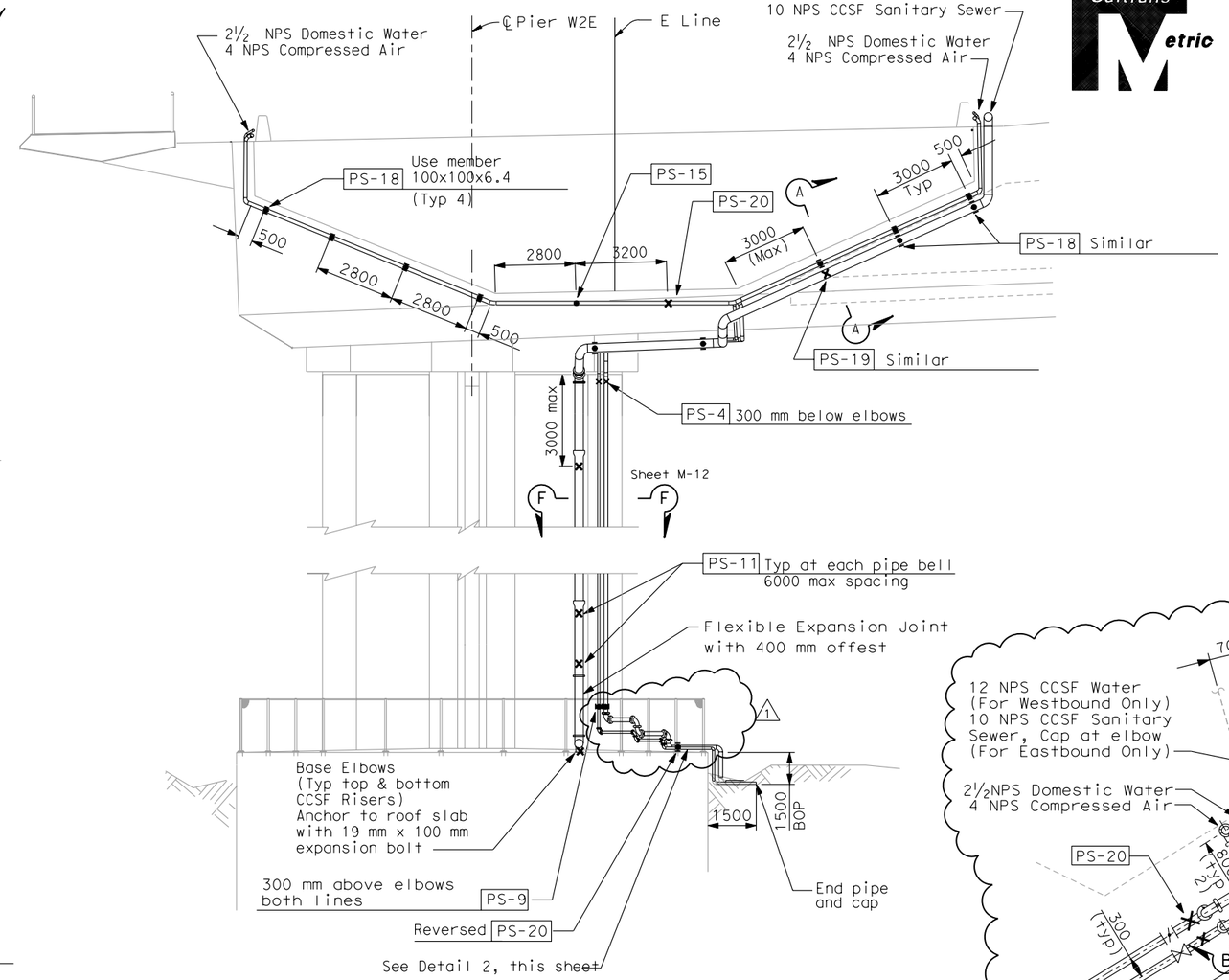

SECTION C-C

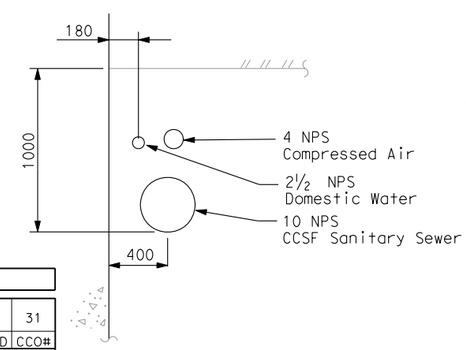

SECTION A-A

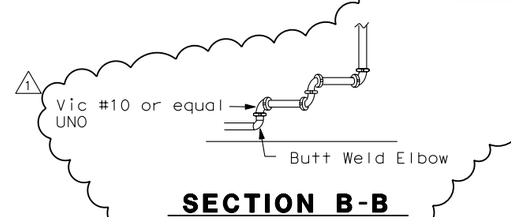

SECTION B-B

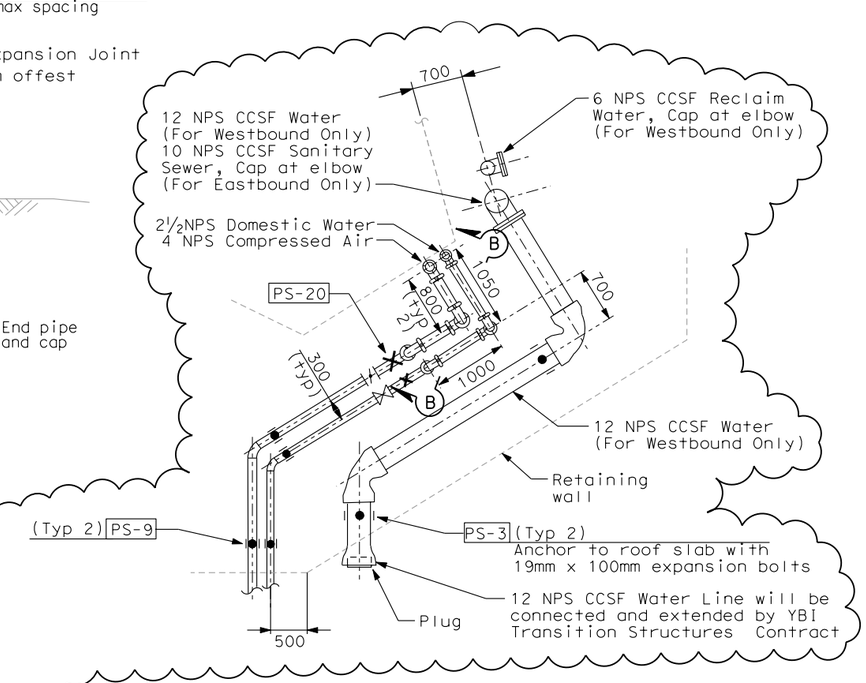

2

DETAIL 2 / -

Similar for Eastbound

REQUEST FOR INFORMATION NOT ADDRESSED IN THIS CCO REMAIN IN FORCE					
1	1/17/08	MECHANICAL MODIFICATIONS	VY	BM	31
MARK	DATE	DESCRIPTIONS	BY	CH'D	CCO#
		REVISIONS			

CONTRACT CHANGE ORDER NO._____
SHEET _____ OF _____

2 **REVISED PER ADDENDUM NO. 2 DATED SEPTEMBER 29, 2005**

MECHANICAL PIPING SECTIONS AND DETAILS NO. 4

NO SCALE

M-14

ALL DIMENSIONS IN MILLIMETERS UNLESS OTHERWISE SHOWN

DATE	BY	REVISED BY	DATE REVISED
10/31/02	BM	KH	11/15/02

CALCULATED/DESIGNED BY
CHECKED BY

PROJECT ENGINEER Rich Newell

STATE OF CALIFORNIA - DEPARTMENT OF TRANSPORTATION

Caltrans

LAST REVISION 00-00-00
DATE PLOTTED => 3/12/2008
TIME PLOTTED => 3:47:59 PM

FOR REDUCED PLANS ORIGINAL SCALE IS IN MILLIMETERS 0 20 40 60 80

USERNAME => reyesl
DGN FILE => T:\13103\MS\pse\SAS Struc\CCO\SAS CCO31\ISSUED 2-25-08\04-0120F1_0050R01.dgn

CU 04251

EA 0120F1

DIST	COUNTY	ROUTE	KILOMETER POST TOTAL PROJECT	SHEET No	TOTAL SHEETS
04	SF	80	13.2/13.9	51R2	1204

Bobby J. Melvin 12/19/2002
REGISTERED MECHANICAL ENGINEER DATE

12-6-04
PLANS APPROVAL DATE

REGISTERED PROFESSIONAL ENGINEER Bobby J. Melvin No. 28685 Exp. 6/30/09 MECHANICAL STATE OF CALIFORNIA

PARSONS BRINCKERHOFF QUADE & DOUGLAS, INC.
303 SECOND STREET, SUITE 700 N
SAN FRANCISCO, CA 94107

The State of California or its officers or agents shall not be responsible for the accuracy or completeness of electronic copies of this plan sheet.

To get to the web site, go to http://www.dot.ca.gov

Caltrans Metric

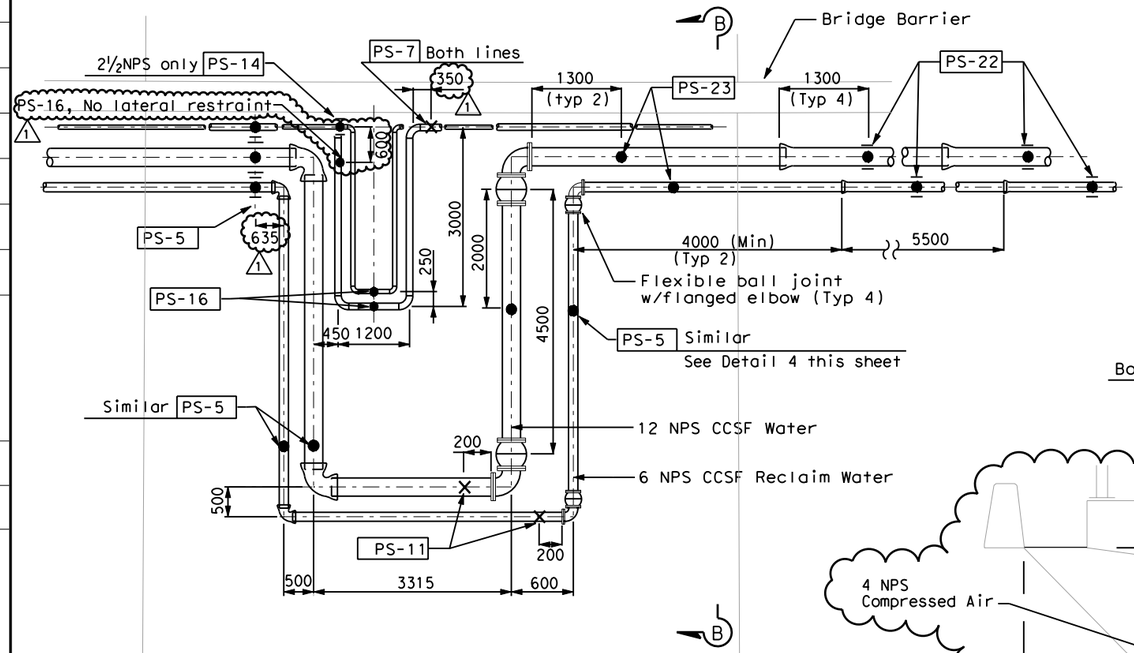

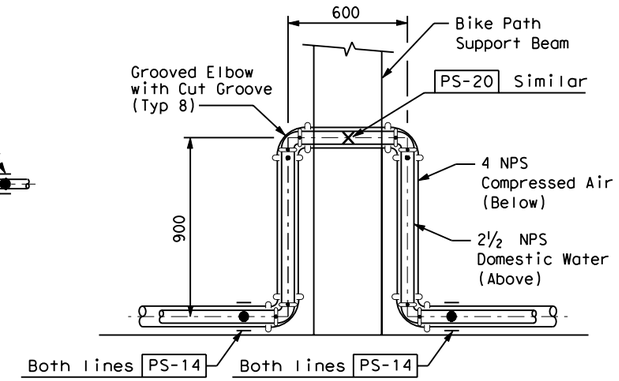

DETAIL 3 -

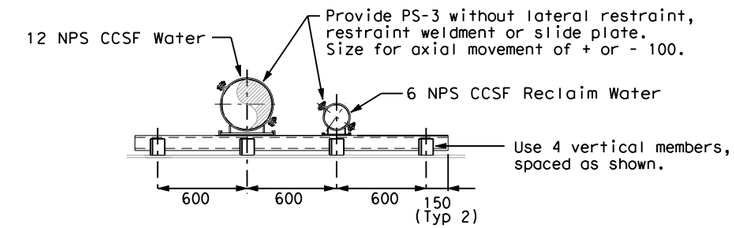

DETAIL 4 -

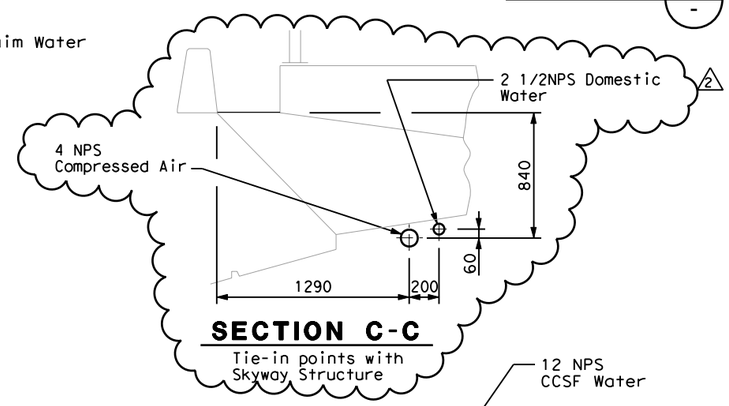

SECTION C-C
Tie-in points with Skyway Structure

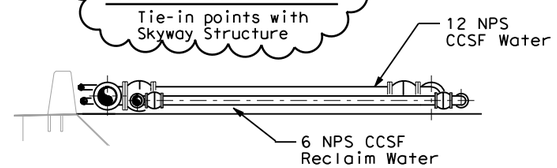

SECTION B-B

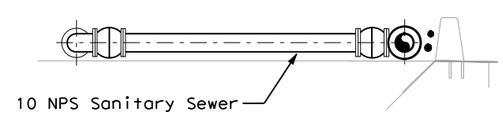

SECTION A-A

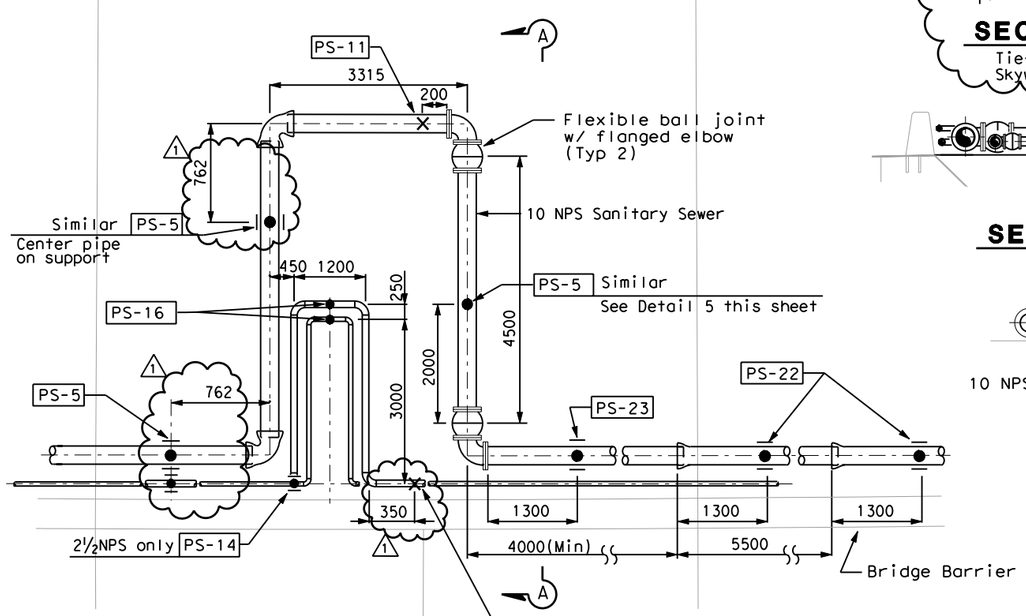

EXPANSION JOINTS FOR HINGE A

DETAIL 1 M-10

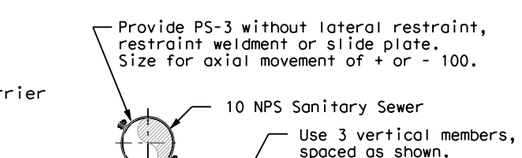

DETAIL 5 -

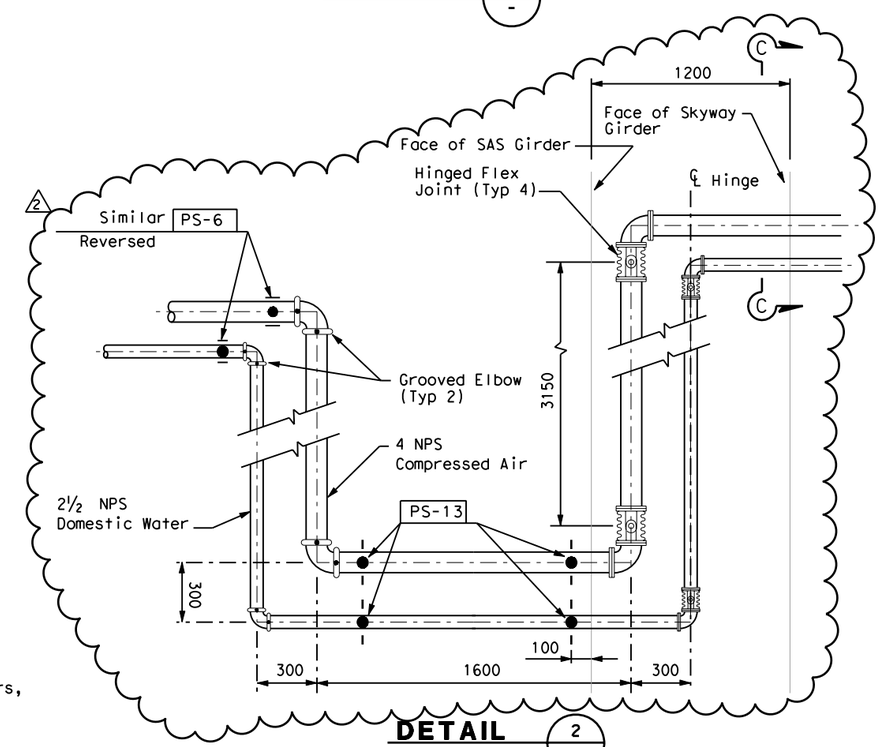

DETAIL 2 -

MARK	DATE	DESCRIPTIONS	BY	CH'D	CCO#
2	1/18/08	MECHANICAL MODIFICATIONS	VY	BM	31
1	9/05/07	MECHANICAL MODIFICATIONS	BM	RM	31

REVISIONS

REQUEST FOR INFORMATION NOT ADDRESSED IN THIS CCO REMAIN IN FORCE

CONTRACT CHANGE ORDER NO. _____
SHEET _____ OF _____

ALL DIMENSIONS IN MILLIMETERS UNLESS OTHERWISE SHOWN

MECHANICAL PIPING SECTIONS AND DETAILS NO. 5

NO SCALE

M-15

DATE	REVISED BY	DATE	REVISED
10/31/02	BM	11/15/02	KH

CALCULATED/DESIGNED BY
CHECKED BY

PROJECT ENGINEER Rich Newell

STATE OF CALIFORNIA - DEPARTMENT OF TRANSPORTATION
Caltrans

LAST REVISION 00-00-00 | DATE PLOTTED => 2/26/2008 | TIME PLOTTED => 10:14:55 AM

FOR REDUCED PLANS ORIGINAL SCALE IS IN MILLIMETERS 0 20 40 60 80

USERNAME => reyesl
DGN FILE => T:\13103\MS\pse\SAS Struc\CCO\SAS CCO31\ISSUED 1-18-08\04-012011_0051R02.dgn

CU 04251 | EA 0120F1

DIST	COUNTY	ROUTE	KILOMETER POST TOTAL PROJECT	SHEET No	TOTAL SHEETS
04	SF	80	13.2/13.9	52R2	1204

Bobby J. Melvin 12/19/2002
REGISTERED MECHANICAL ENGINEER DATE

12-6-04
PLANS APPROVAL DATE

REGISTERED PROFESSIONAL ENGINEER Bobby J. Melvin No. 28685 Exp. 6/30/09 MECHANICAL STATE OF CALIFORNIA

PARSONS BRINCKERHOFF QUADE & DOUGLAS, INC.
303 SECOND STREET, SUITE 700 N
SAN FRANCISCO, CA 94107

The State of California or its officers or agents shall not be responsible for the accuracy or completeness of electronic copies of this plan sheet.

To get to the web site, go to http://www.dot.ca.gov

Caltrans Metric

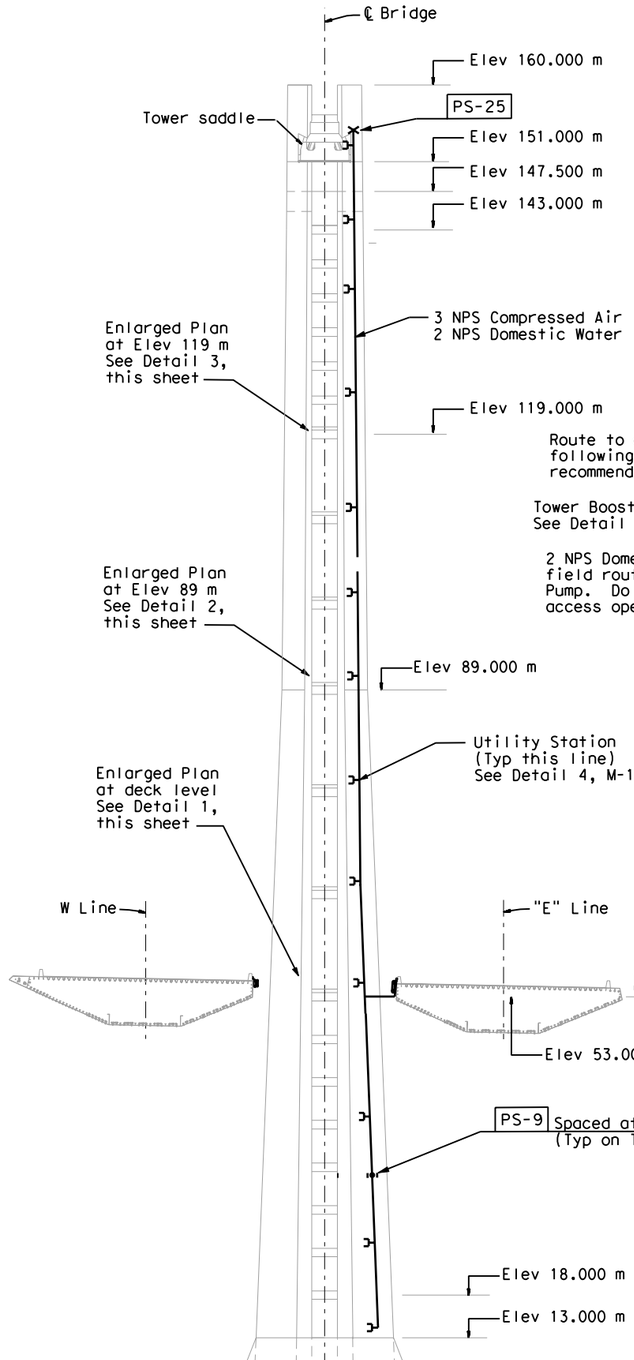

SECTION A-A

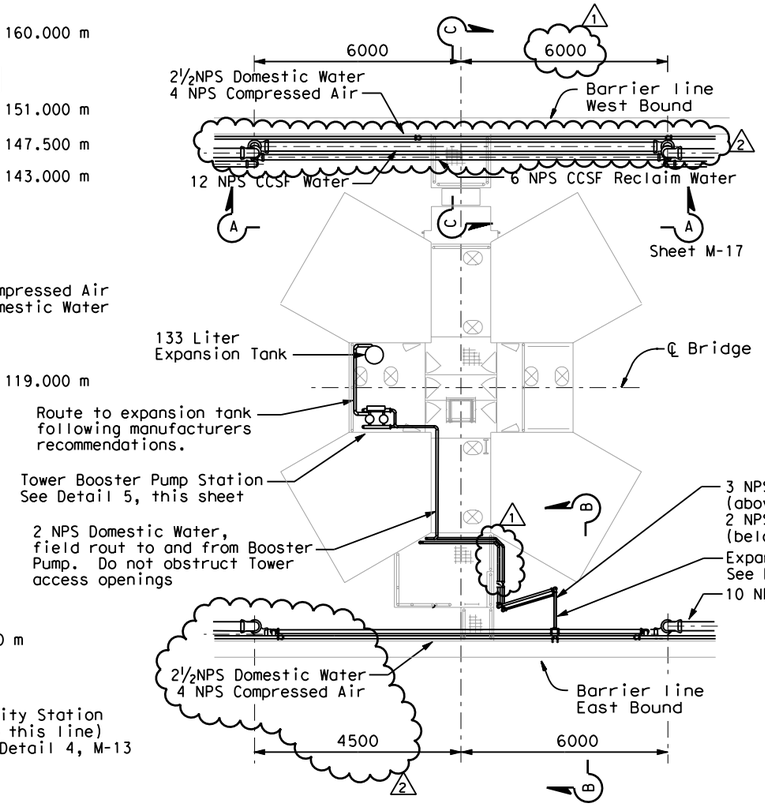

1 DETAIL

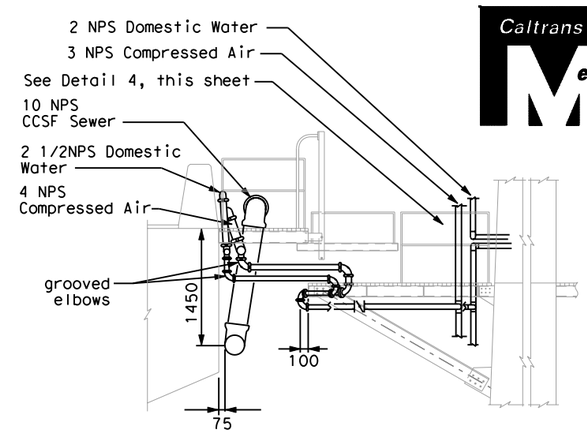

SECTION B-B

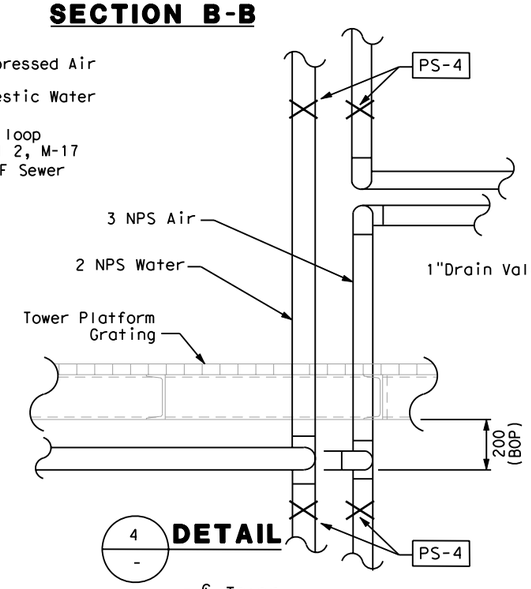

4 DETAIL

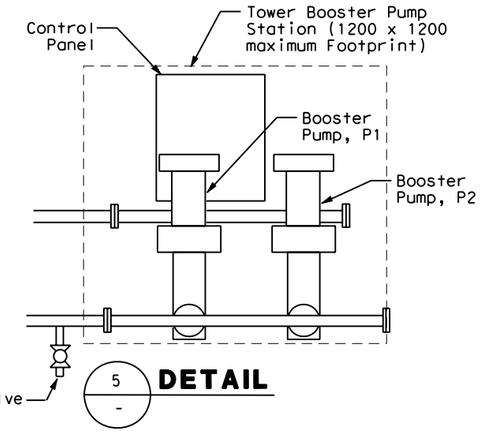

5 DETAIL

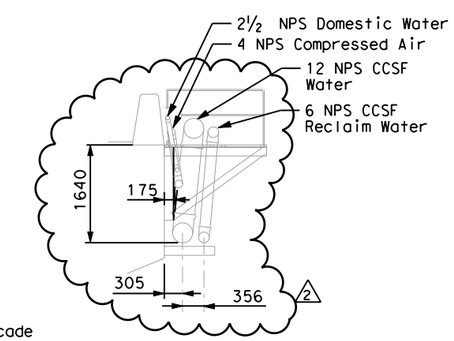

SECTION C-C

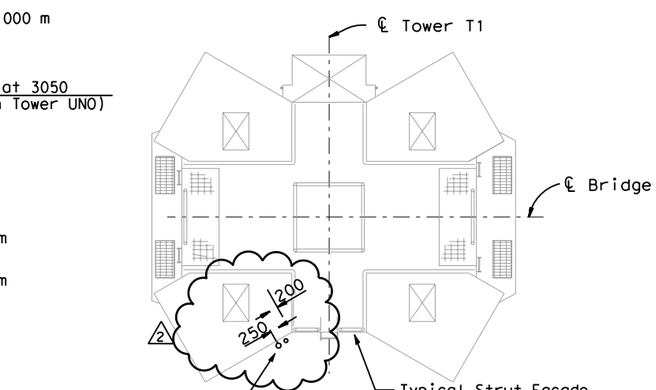

2 DETAIL

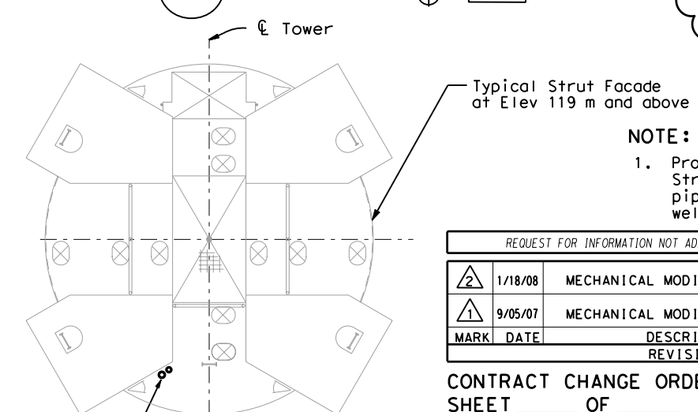

3 DETAIL

NOTE:

1. Provide penetration sleeve thru Strut Facade 1 full pipe size larger than pipe. Extend 25mm beyond Facade and weld all around (Typ Facade Type A)

REQUEST FOR INFORMATION NOT ADDRESSED IN THIS CCO REMAIN IN FORCE

MARK	DATE	DESCRIPTIONS	BY	CH'D	CCO#
2	1/18/08	MECHANICAL MODIFICATIONS	VY	BM	31
1	9/05/07	MECHANICAL MODIFICATIONS	BM	RM	31

REVISIONS

CONTRACT CHANGE ORDER NO._____
SHEET _____ OF _____

MECHANICAL PIPING SECTIONS AND DETAILS NO. 6

NO SCALE

M-16

ALL DIMENSIONS IN MILLIMETERS UNLESS OTHERWISE SHOWN

DATE	BM	CALCULATED/ DESIGNED BY	PROJECT ENGINEER
10/31/02	KH	CHECKED BY	Rich Newell
11/15/02			

REVISED BY / DATE REVISED

STATE OF CALIFORNIA - DEPARTMENT OF TRANSPORTATION

Caltrans

F:\13103K/DGN/CONTRACT/13103M016.dgn 6-21-01

LAST REVISION 00-00-00 | DATE PLOTTED => 2/26/2008 | TIME PLOTTED => 10:15:20 AM

FOR REDUCED PLANS ORIGINAL SCALE IS IN MILLIMETERS 0 20 40 60 80

USERNAME => reyesl
DGN FILE => T:\13103\MS\pse\SAS Struc\CCO\SAS CCO31\ISSUED 1-18-08\04_0120F1_0052R02.dgn

CU 04251 | EA 0120F1

DIST	COUNTY	ROUTE	KILOMETER POST TOTAL PROJECT	SHEET No	TOTAL SHEETS
04	SF	80	13.2/13.9	53R3	1204

REGISTERED MECHANICAL ENGINEER — DATE 12/19/2002

12-6-04
PLANS APPROVAL DATE

REGISTERED PROFESSIONAL ENGINEER — Bobby J. Melvin — No. 28685 — Exp. 6/30/09 — MECHANICAL — STATE OF CALIFORNIA

PARSONS BRINCKERHOFF QUADE & DOUGLAS, INC.
303 SECOND STREET, SUITE 700 N
SAN FRANCISCO, CA 94107

The State of California or its officers or agents shall not be responsible for the accuracy or completeness of electronic copies of this plan sheet.

To get to the web site, go to http://www.dot.ca.gov

Caltrans Metric

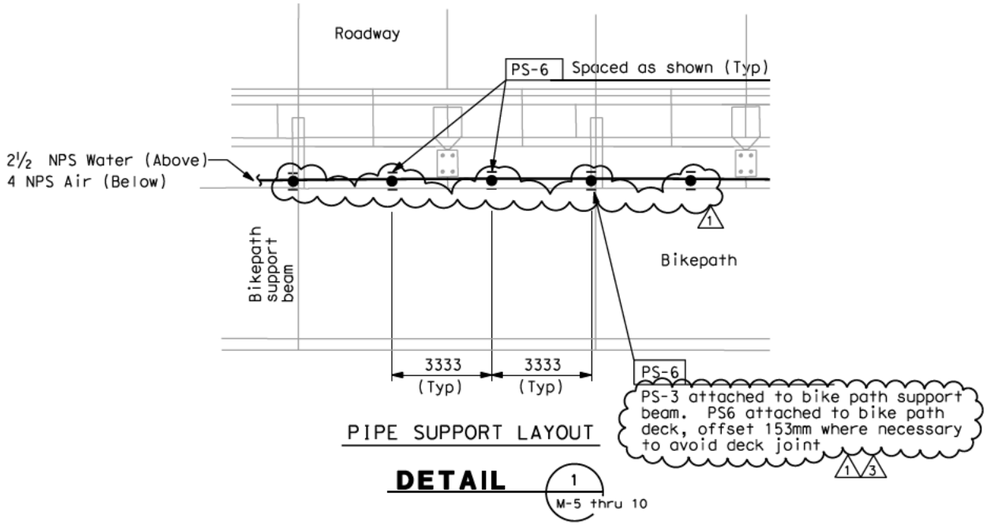

PIPE SUPPORT LAYOUT

DETAIL 1 / M-5 thru 10

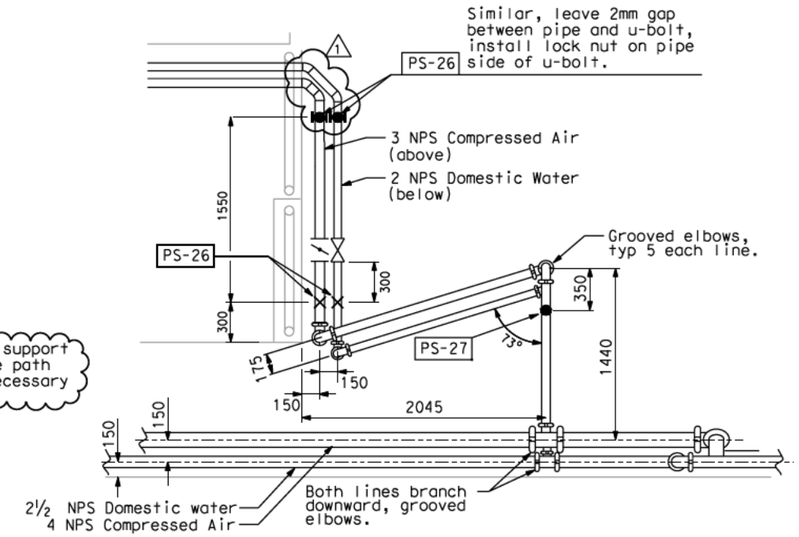

DETAIL 2 / M-16

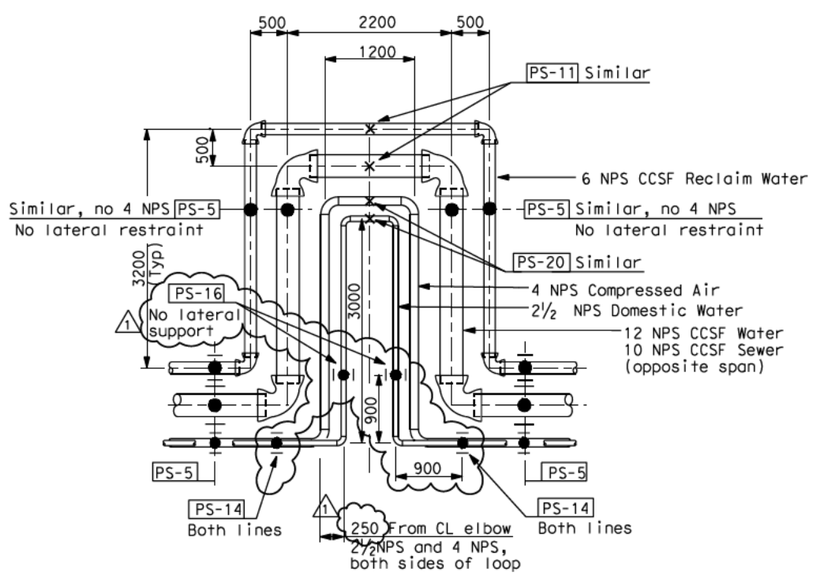

DETAIL 3 / M-16
Similar for Eastbound except mirrored

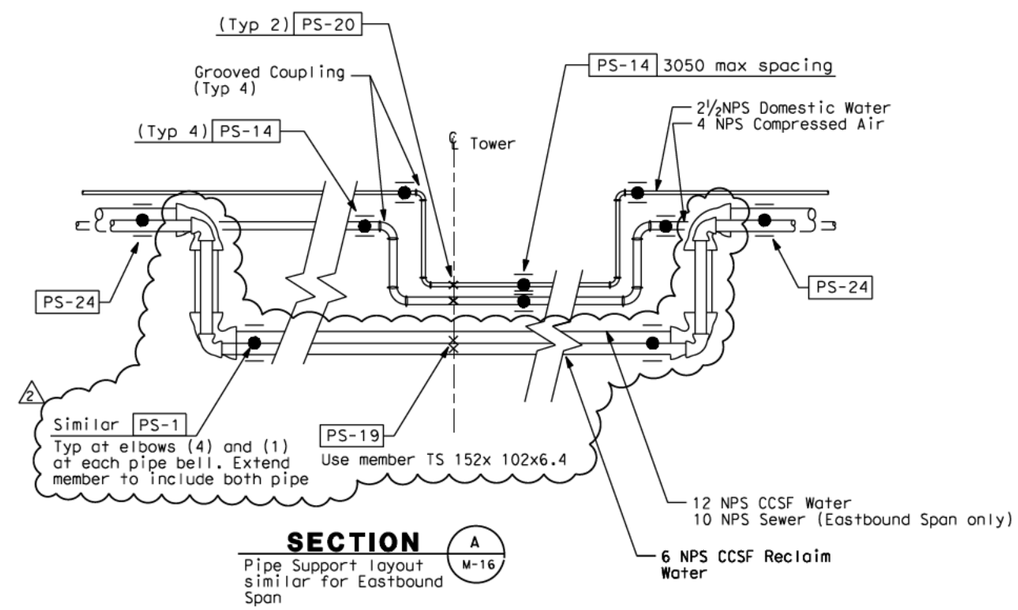

SECTION A / M-16
Pipe Support layout similar for Eastbound Span

REQUEST FOR INFORMATION NOT ADDRESSED IN THIS CCO REMAIN IN FORCE					
3	4/7/08	MECHANICAL MODIFICATIONS	VY	BM	31
2	1/18/08	MECHANICAL MODIFICATIONS	VY	BM	31
1	9/05/07	MECHANICAL MODIFICATIONS	BM	RM	31
MARK	DATE	DESCRIPTIONS	BY	CH'D	CCO#
		REVISIONS			

CONTRACT CHANGE ORDER NO._____
SHEET _____ OF _____

MECHANICAL PIPING SECTIONS & DETAILS NO.7

NO SCALE

M-17

CALCULATED/DESIGNED BY	BM	DATE 10/31/02	REVISED BY
CHECKED BY	KH	11/15/02	DATE REVISED

PROJECT ENGINEER: Rich Newell

STATE OF CALIFORNIA - DEPARTMENT OF TRANSPORTATION — Caltrans

LAST REVISION 00-00-00 — DATE PLOTTED => 4/7/2008 — TIME PLOTTED => 4:30:55 PM

FOR REDUCED PLANS ORIGINAL SCALE IS IN MILLIMETERS 0 20 40 60 80

USERNAME => reyesl
DGN FILE => T:\13103\MS\pse\SAS Struc\CCO\SAS CCO31\ISSUED 4-07-08\04-012F1_0053R03.dgn

CU 04251 — EA 0120F1

DIST	COUNTY	ROUTE	KILOMETER POST TOTAL PROJECT	SHEET No	TOTAL SHEETS
04	SF	80	13.2/13.9	54R1	1204

Bobby J. Melvin 12/19/2002
REGISTERED MECHANICAL ENGINEER DATE

12-6-04
PLANS APPROVAL DATE

REGISTERED PROFESSIONAL ENGINEER Bobby J. Melvin No. 28685 Exp. 6/30/09 MECHANICAL STATE OF CALIFORNIA

PARSONS BRINCKERHOFF QUADE & DOUGLAS, INC.
303 SECOND STREET, SUITE 700 N
SAN FRANCISCO, CA 94107

The State of California or its officers or agents shall not be responsible for the accuracy or completeness of electronic copies of this plan sheet.

To get to the web site, go to http://www.dot.ca.gov

Caltrans Metric

Table for PS-1

PIPE	"A"	"B"	"C"	Values for PS-3 Vert. (kg)	Lat. (kg)	Move. (mm)
2½NPS Water	W150X22	2	6	70	45	±38
4 NPS Air	W150X22	2	6	130	80	±38
6 NPS Water	W150X30	3	6	450	200	±38
10 NPS Sewer	W150X30	3	6	1000	440	±38
12 NPS Water	W150X30	3	6	1300	600	±38

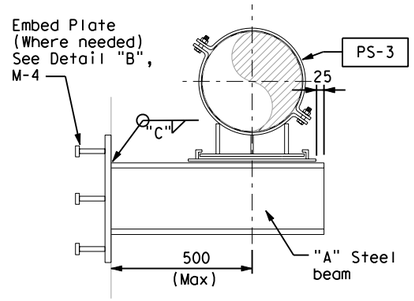

PIPE SUPPORT DETAIL PS-1

Table for PS-2

PIPE SIZE	ROD STIFFENER SIZE	ROD SIZE	CLAMP RATING (KG)	MIN. CLAMP WIDTH	"W"	"Y"	"A"	"B"
6 NPS	L 50X50X9.5	16	600	65	6	4-12	2	2
10,12 NPS	L 75X75X6.4	19	1230	80	6	4-12	2	2

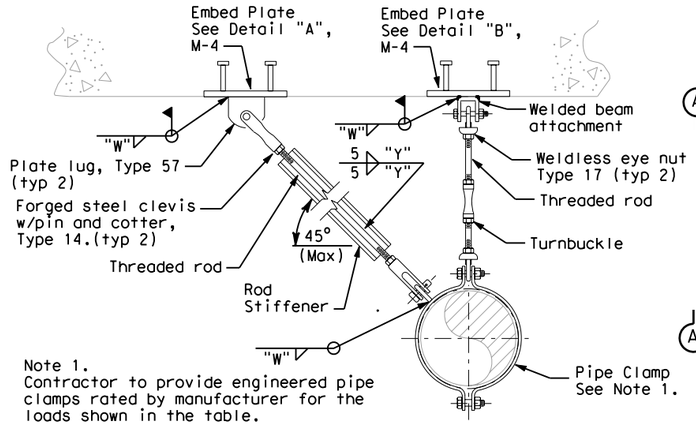

Note 1.
Contractor to provide engineered pipe clamps rated by manufacturer for the loads shown in the table.

PIPE SUPPORT DETAIL PS-2

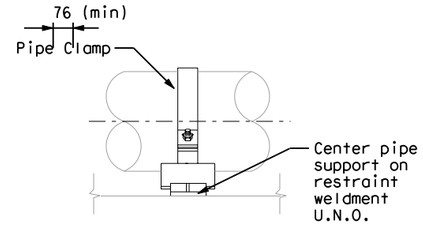

SECTION A-A

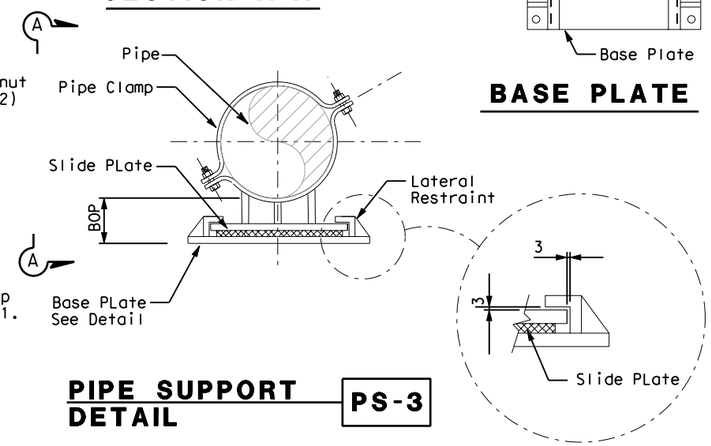

PIPE SUPPORT DETAIL PS-3

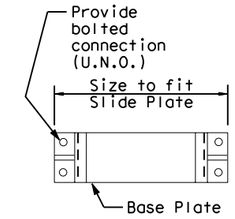

BASE PLATE

NOTES FOR PS-3

1. Contractor to provide engineered supports rated by manufacturer for the loads and movements shown in the details.
2. Support configuration shown is intended to illustrate general form of support. Actual configurations may vary depending on manufacturer, loads and movements.
3. Slide pads shall be Teflon or Ultra-HDPE running on a stainless steel plate.
4. Submit product data for each support. Each support shall be identified by a unique support model number corresponding to performance data from the manufacturer.
5. Pipe support loads act on pipe centerline.
6. Slide plates not required on supports for piping 6 NPS and smaller.
7. Minimum clamp width for use with ductile iron pipe = 75 mm U.N.O.

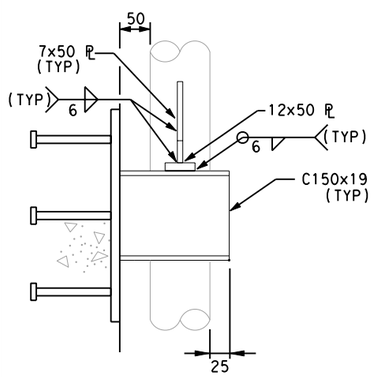

SECTION C-C

Table for PS-6

Pipe	"A"	Data for PS-3 Vert. Load (kg)	Lat. Load (kg)	Axial Move (mm)
2½ NPS	L51x51x7.9	50	25	38
4 NPS	C75x6	110	55	38

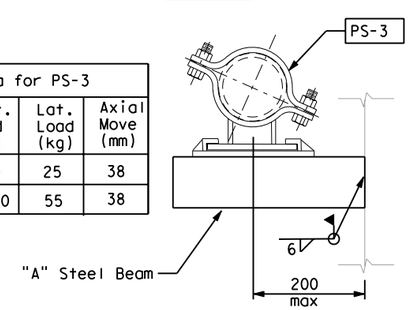

PIPE SUPPORT DETAIL PS-6

MARK	DATE	DESCRIPTIONS	BY	CH'D	CCO#
1	9/05/07	MECHANICAL MODIFICATIONS	BM	RM	31

REQUEST FOR INFORMATION NOT ADDRESSED IN THIS CCO REMAIN IN FORCE

REVISIONS

CONTRACT CHANGE ORDER NO._____
SHEET _____ OF _____

Table for PS-3 to be used with PS-5

PIPE	Vert. Load (kg)	Lat. Load (kg)	Axial Move. (mm)
4 NPS Air	130	80	±38
6 NPS Water	450	200	±38
10 NPS Sewer	1000	440	±38
12 NPS Water	1300	600	±38

GENERAL NOTES FOR PIPE SUPPORTS

1. For piping outside of bridge girder, all steel surfaces of pipe supports and components shall be hot dip galvanized except supplementary steel members attached to bridge structure and components requiring field welding. Pipe supports inside bridge girder shall be painted.
2. All manufactured support components shall be load rated by manufacturer.
3. Expand all grooved and restrained joint couplings prior to setting pipe clamp locations.
4. All supports shall meet the requirements of applicable MSS Standards
5. Provide all necessary nuts, bolts, pins washers etc. to complete pipe support assemblies.
6. Holes for bolts, pins etc. shall not be torch cut unless approved by engineer.
7. All welding for pipe supports shall be per project welding specification and vendor instructions.
8. "Type" Designation for manufactured hanger components refers to MSS-SP69.
9. Support components welded to embed plates shall be centered on embed plates, U.N.O.
10. For embed plate details see drawing M-4.
11. Maintain minimum 200 mm clearance between pipe rolls and piping obstructions, ie; pipe bells, welds, branches etc.
12. Pipe supports shall not be field welded to steel box girder. All welding to girders shall be shop weld.

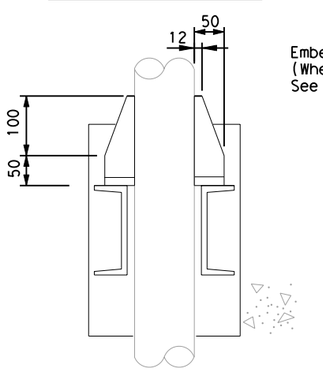

SECTION B-B

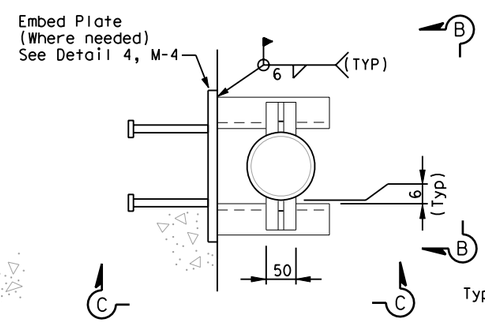

PIPE SUPPORT DETAIL PS-4

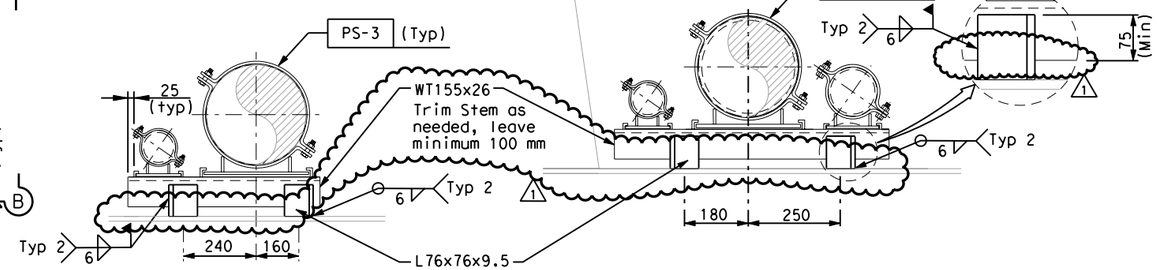

EASTBOUND **WESTBOUND**

PIPE SUPPORT DETAIL PS-5

ALL DIMENSIONS IN MILLIMETERS UNLESS OTHERWISE SHOWN

MECHANICAL PIPE SUPPORT DETAILS NO. 1

NO SCALE

M-18

STATE OF CALIFORNIA - DEPARTMENT OF TRANSPORTATION
Caltrans

PROJECT ENGINEER Rich Newell

CALCULATED/DESIGNED BY	BM	DATE 10/31/02	REVISED BY
CHECKED BY	KH	11/15/02	DATE REVISED

LAST REVISION 00-00-00 | DATE PLOTTED => 2/26/2008 | TIME PLOTTED => 11:13:46 AM

FOR REDUCED PLANS ORIGINAL SCALE IS IN MILLIMETERS 0 20 40 60 80

USERNAME => reyesl
DGN FILE => T:\13103\MS\pse\SAS Struc\CCO\SAS CC031\ISSUED 2-25-08\04-012011_0054R01.dgn

CU 04251 EA 0120F1

DIST	COUNTY	ROUTE	KILOMETER POST TOTAL PROJECT	SHEET No	TOTAL SHEETS
04	SF	80	13.2/13.9	55R2	1204

Bobby J. Melvin 12/19/2002
REGISTERED MECHANICAL ENGINEER DATE

12-6-04
PLANS APPROVAL DATE

REGISTERED PROFESSIONAL ENGINEER Bobby J. Melvin No. 28685 Exp. 6/30/09 MECHANICAL STATE OF CALIFORNIA

PARSONS BRINCKERHOFF QUADE & DOUGLAS, INC.
303 SECOND STREET, SUITE 700 N
SAN FRANCISCO, CA 94107

The State of California or its officers or agents shall not be responsible for the accuracy or completeness of electronic copies of this plan sheet.

To get to the web site, go to http://www.dot.ca.gov

Caltrans Metric

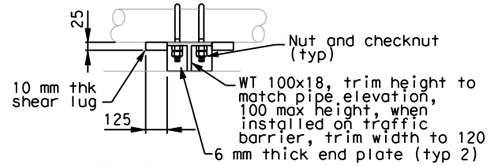

SECTION A-A

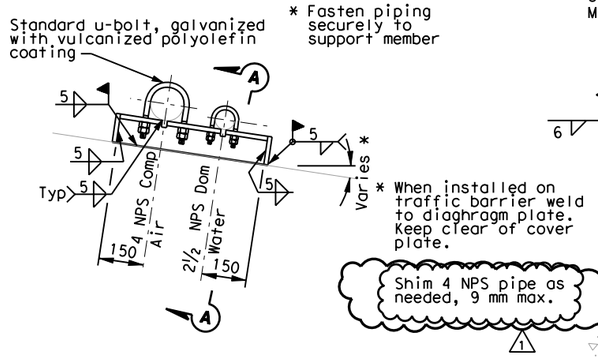

PIPE SUPPORT DETAIL PS-7

Table for PS-8

Pipe	"A"	"B"	"C"
6 NPS Reclaim Water	W250x49x250long	3	16 mm,ASTM A325
10 NPS Sewer	W250x73x355long	1	19 mm,ASTM A325
12 NPS Water	W250x73x355long	1	19 mm,ASTM A325

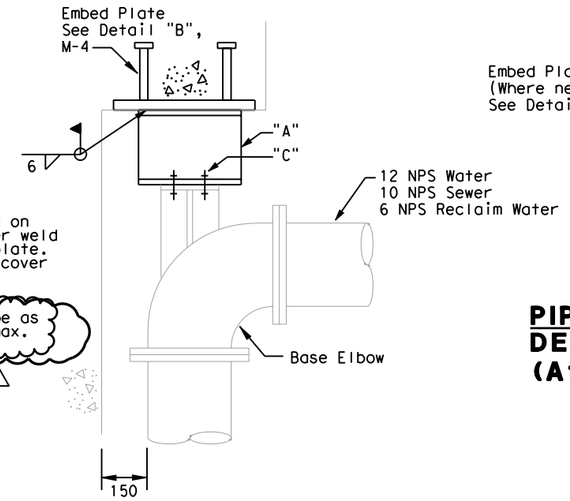

PIPE SUPPORT DETAIL PS-8

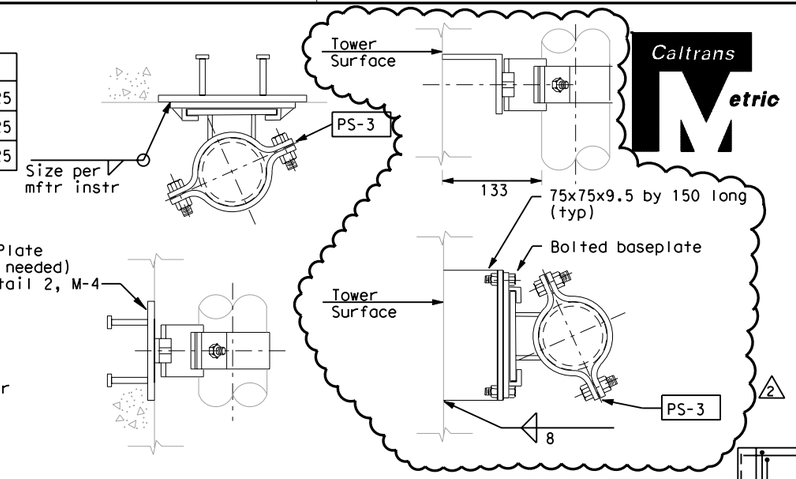

PIPE SUPPORT DETAIL PS-9 (Attachment to Concrete)

PIPE SUPPORT DETAIL PS-9 (Attachment to Tower)

Table for PS-3 to use with PS-9

Pipe	Vert. Load (kg)	Lat. Load (kg)	Axial Move (mm)
2 NPS	-	30	38
2½ NPS	-	30	38
3 NPS	-	40	38
4 NPS	-	60	38

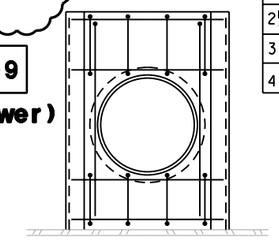

SECTION D-D

East Bound

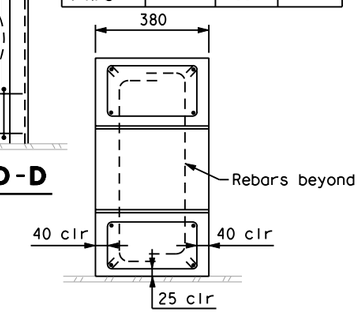

SECTION E-E

Table for PS-10

PIPE	"A"	"B"	"C"	"D"
6 NPS Reclaim Water	W200X36	4	6	19 mm BOLT - ASTM A325
10 NPS Sewer	W200X46	3	6	19 mm BOLT - ASTM A325
12 NPS Water	W200X46	3	6	19 mm BOLT - ASTM A325

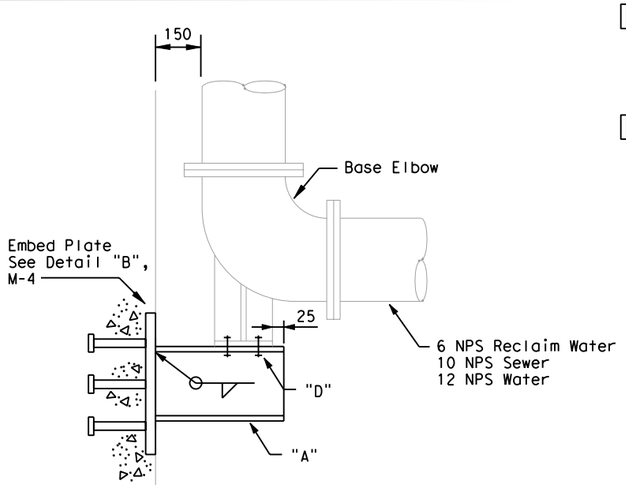

PIPE SUPPORT DETAIL PS-10

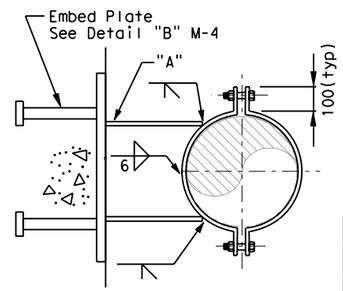

SECTION C-C

Table for PS-11

Pipe	"A"	"B"	"C"
6 NPS Reclaim Water	W150X30	4	13
10 NPS Sewer	W200X46	4	13
12 NPS Water	W200X46	4	13

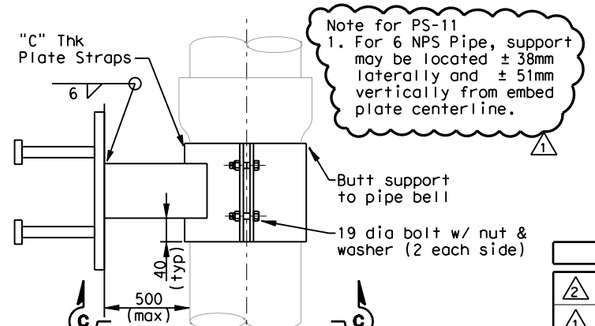

Note for PS-11
1. For 6 NPS Pipe, support may be located ± 38mm laterally and ± 51mm vertically from embed plate centerline.
1

PIPE SUPPORT DETAIL PS-11

Thrust Collar for PS-12

Pipe	Axial Load Rating (kg)
6 NPS	6,000
10 NPS	13,000
12 NPS	18,000

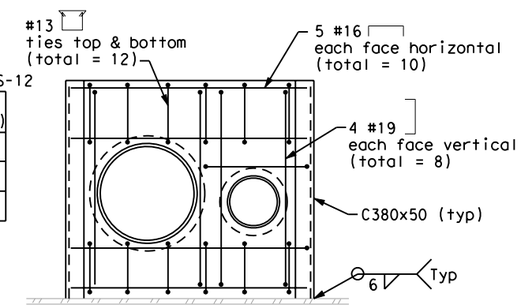

SECTION D-D

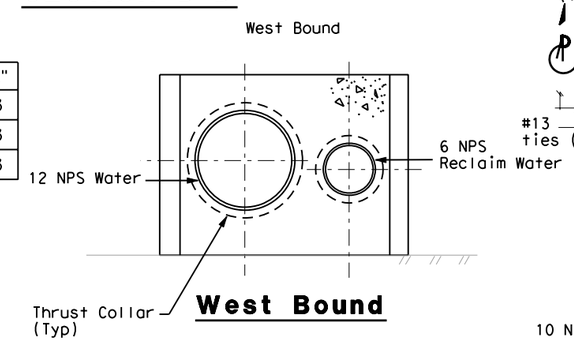

West Bound

PIPE SUPPORT DETAIL PS-12

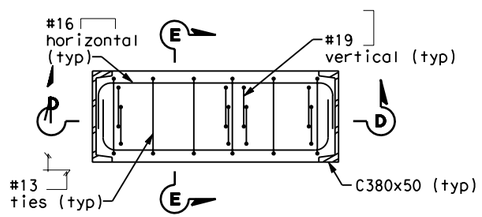

PLAN NEAR TOP

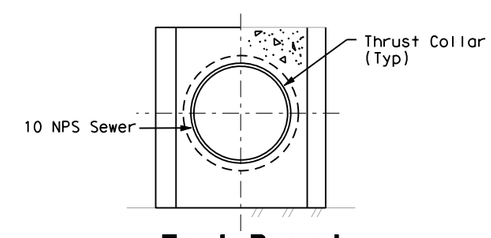

East Bound

REQUEST FOR INFORMATION NOT ADDRESSED IN THIS CCO REMAIN IN FORCE					
2	1/18/08	MECHANICAL MODIFICATIONS	VY	BM	31
1	9/05/07	MECHANICAL MODIFICATIONS	BM	RM	31
MARK	DATE	DESCRIPTIONS	BY	CH'D	CCO#
		REVISIONS			

CONTRACT CHANGE ORDER NO._____
SHEET _____ OF _____

MECHANICAL PIPE SUPPORT DETAILS No. 2

NO SCALE

M-19

ALL DIMENSIONS IN MILLIMETERS UNLESS OTHERWISE SHOWN

DATE	BM	REVISED BY	DATE REVISED
10/31/02	KH	11/15/02	

CALCULATED/DESIGNED BY — CHECKED BY

PROJECT ENGINEER: Rich Newell

STATE OF CALIFORNIA - DEPARTMENT OF TRANSPORTATION

Caltrans

LAST REVISION 00-00-00 — DATE PLOTTED => 2/26/2008 — TIME PLOTTED => 10:18:16 AM

FOR REDUCED PLANS ORIGINAL SCALE IS IN MILLIMETERS 0 20 40 60 80

USERNAME => reyesl
DGN FILE => T:\13103\MS\pse\SAS Struc\CCO\SAS CCO31\ISSUED 1-18-08\04-012011_0055R02.dgn

CU 04251 — EA 0120F1

DIST	COUNTY	ROUTE	KILOMETER POST TOTAL PROJECT	SHEET No	TOTAL SHEETS
04	SF	80	13.2/13.9	56R2	1204

Bobby J. Melvin 12/19/2002
REGISTERED MECHANICAL ENGINEER DATE

12-6-04
PLANS APPROVAL DATE

REGISTERED PROFESSIONAL ENGINEER Bobby J. Melvin No. 28685 Exp. 6/30/09 MECHANICAL STATE OF CALIFORNIA

PARSONS BRINCKERHOFF QUADE & DOUGLAS, INC.
303 SECOND STREET, SUITE 700 N
SAN FRANCISCO, CA 94107

The State of California or its officers or agents shall not be responsible for the accuracy or completeness of electronic copies of this plan sheet.

Caltrans now has a web site! To get to the web site, go to http://www.dot.ca.gov

Caltrans Metric

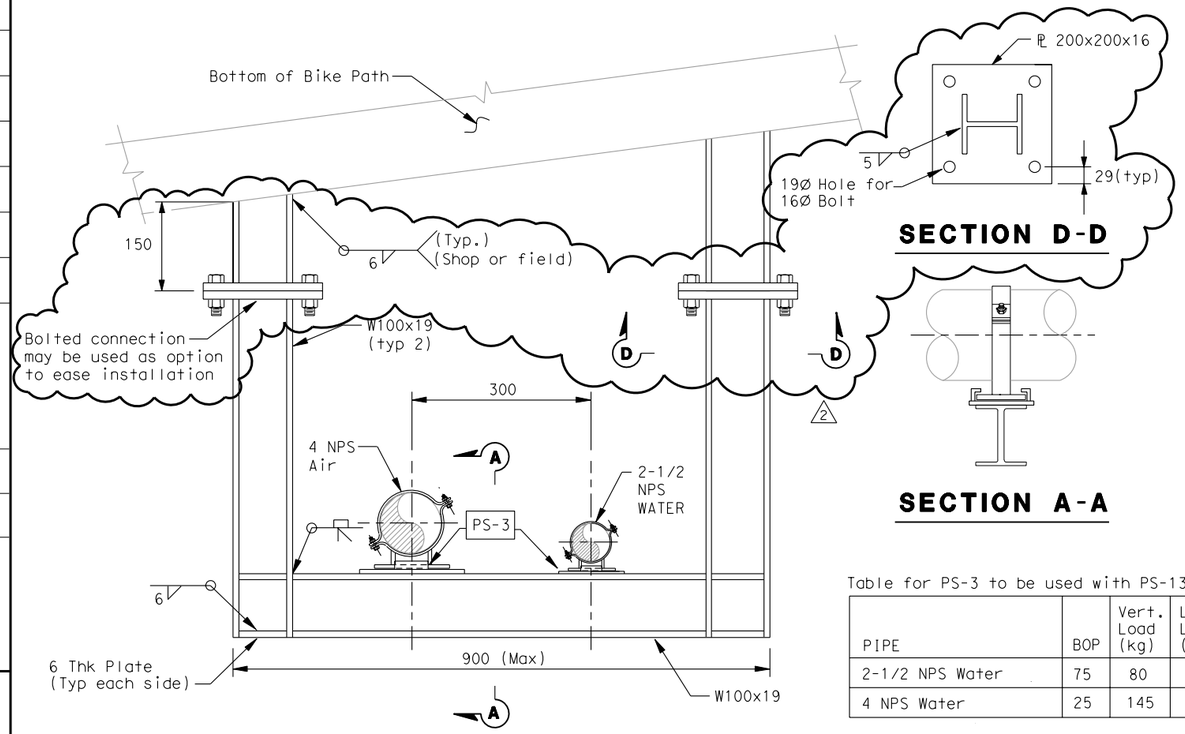

PIPE SUPPORT DETAIL PS-13

SECTION D-D

SECTION A-A

Table for PS-3 to be used with PS-14

PIPE	Vert. Load (kg)	Lat. Load (kg)	Axial Move. (mm)
2½ NPS Water	70	45	±38
4 NPS Air	130	80	±38

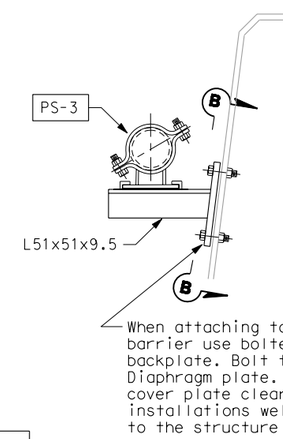

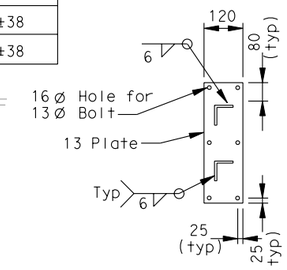

FOR TWO PIPES

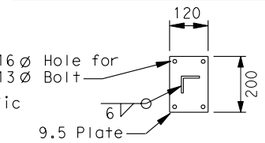

SECTION B-B

PIPE SUPPORT DETAIL PS-14

Table for PS-3 to be used with PS-13

PIPE	BOP	Vert. Load (kg)	Long. Load (kg)
2-1/2 NPS Water	75	80	45
4 NPS Water	25	145	85

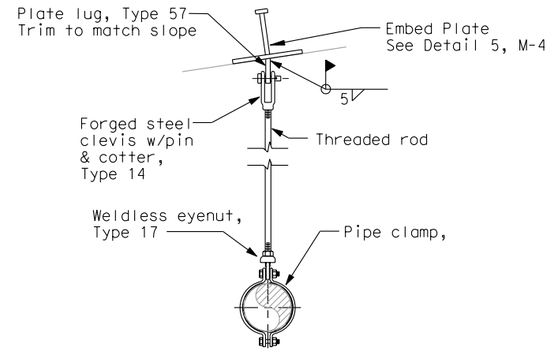

PIPE SUPPORT DETAIL PS-15

Table for PS-3 to be used with PS-17

PIPE	Vert. Load (kg)	Lat. Load (kg)	Axial Move. (mm)
2½ NPS Dom Water	70	73	25
4 NPS Comp Air	130	140	25
6 NPS Sewer	340	340	25
10 NPS Sewer	650	720	25
12 NPS Water	900	1000	25

Table for PS-3 to be used with PS-18

PIPE	Vert. Load (kg)	Lat. Load (kg)	Axial Move. (mm)
2½ NPS Dom Water	70	45	25
4 NPS Comp Air	130	80	25
6 NPS Sewer	340	160	25
10 NPS Sewer	650	340	25
12 NPS Water	900	500	25

Table for PS-3 to be used with PS-16

PIPE	Vert. Load (kg)	Long. Load (kg)	Lat Move. (mm)
2 NPS Water	50	50	38
2-1/2 NPS Water	70	70	38
3 NPS Air	90	70	38
4 NPS Air	130	130	38

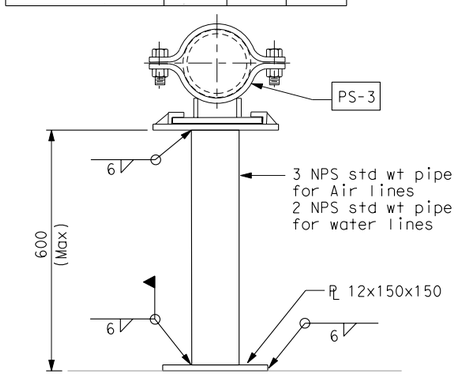

PIPE SUPPORT DETAIL PS-16

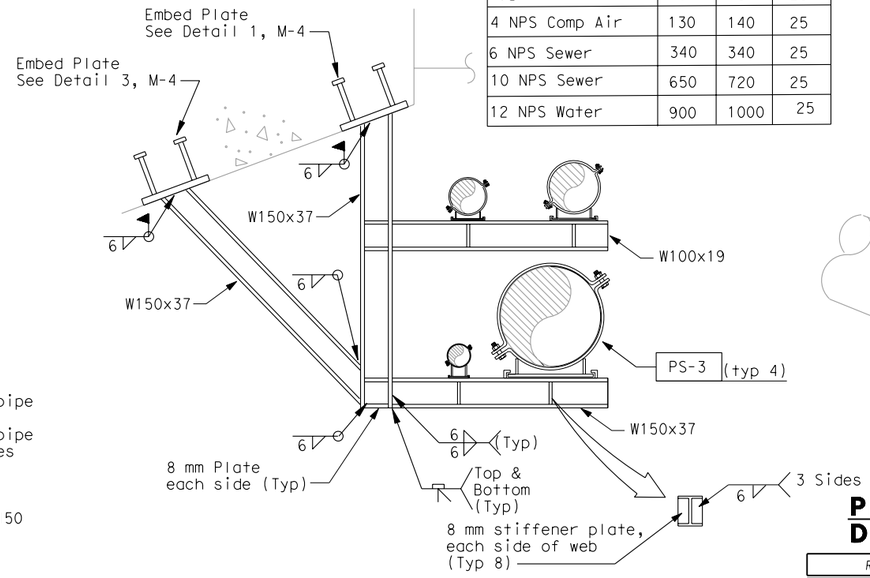

PIPE SUPPORT DETAIL PS-17

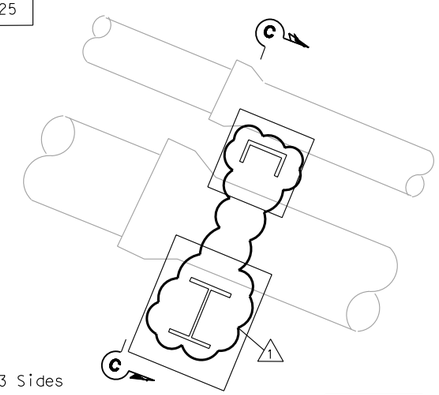

PIPE SUPPORT DETAIL PS-18

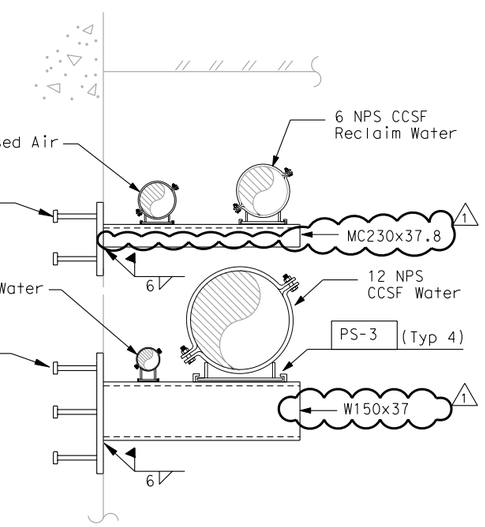

SECTION C-C

MARK	DATE	DESCRIPTIONS	BY	CH'D	CCO#
2	3/10/08	MECHANICAL MODIFICATIONS	VY	BM	31
1	9/05/07	MECHANICAL MODIFICATIONS	BM	RM	31

REQUEST FOR INFORMATION NOT ADDRESSED IN THIS CCO REMAIN IN FORCE

REVISIONS

CONTRACT CHANGE ORDER NO._____
SHEET _____ OF _____

ALL DIMENSIONS IN MILLIMETERS UNLESS OTHERWISE SHOWN

MECHANICAL PIPE SUPPORT DETAILS NO. 3

NO SCALE

M-20

CALCULATED/ DESIGNED BY	BM	DATE 10/31/02	REVISED BY
CHECKED BY	KH	11/15/02	DATE REVISED

PROJECT ENGINEER Rich Newell

STATE OF CALIFORNIA - DEPARTMENT OF TRANSPORTATION

Caltrans

LAST REVISION 00-00-00 | DATE PLOTTED => 3/11/2008 | TIME PLOTTED => 11:22:35 AM

FOR REDUCED PLANS ORIGINAL SCALE IS IN MILLIMETERS 0 20 40 60 80

USERNAME => reyesl
DGN FILE => t:\13103\MS\pse\SAS Struc\CCO\SAS CCO31\ISSUED 1-18-08\04-012011_0056R01.dgn

CU 04251 | EA 012OF1

DIST	COUNTY	ROUTE	KILOMETER POST TOTAL PROJECT	SHEET No	TOTAL SHEETS
04	SF	80	13.2/13.9	57R3	1204

Bobby J. Melvin 12/19/2002
REGISTERED MECHANICAL ENGINEER DATE

12-6-04
PLANS APPROVAL DATE

REGISTERED PROFESSIONAL ENGINEER Bobby J. Melvin No. 28585 Exp. 6/30/09 MECHANICAL STATE OF CALIFORNIA

PARSONS BRINCKERHOFF QUADE & DOUGLAS, INC.
303 SECOND STREET, SUITE 700 N
SAN FRANCISCO, CA 94107

The State of California or its officers or agents shall not be responsible for the accuracy or completeness of electronic copies of this plan sheet.

Caltrans now has a web site! To get to the web site, go to http://www.dot.ca.gov

Caltrans Metric

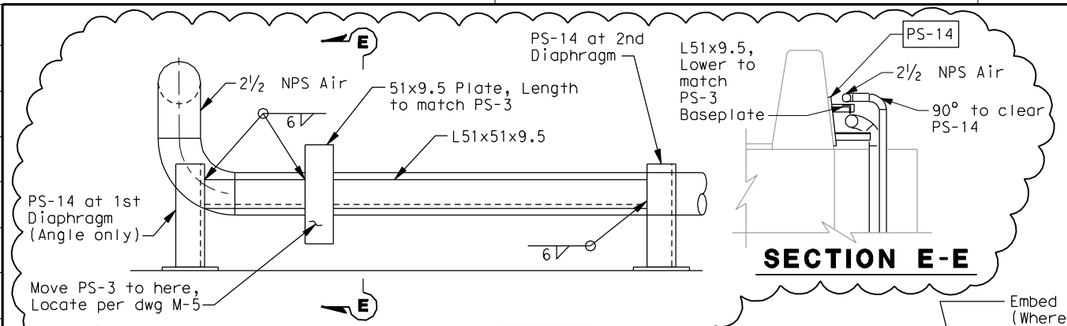

PIPE SUPPORT DETAIL — PS-28

SECTION E-E

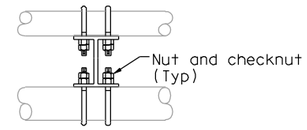

SECTION A-A

Table for PS-3 to be used with PS-21

PIPE	Vert. Load (kg)	Lat. Load (kg)	Axial Move. (mm)
2½ NPS Dom Water	70	45	38
4 NPS Comp Air	130	80	38

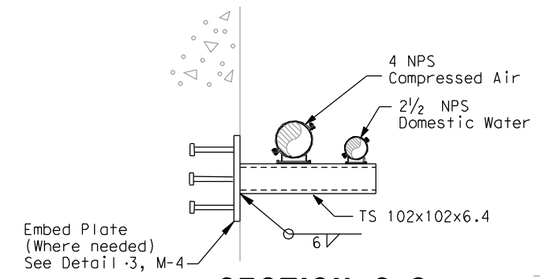

SECTION C-C

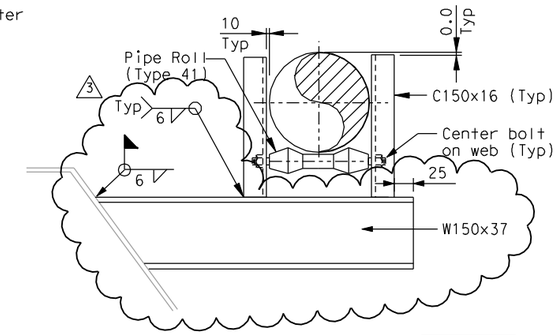

PIPE SUPPORT DETAIL — PS-22

Table for PS-3 to be used with PS-19

PIPE	Vert. Load (kg)	Lat. Load (kg)	Axial Load (kg)
2½ NPS Dom Water	70	45	95
4 NPS Comp Air	130	80	190

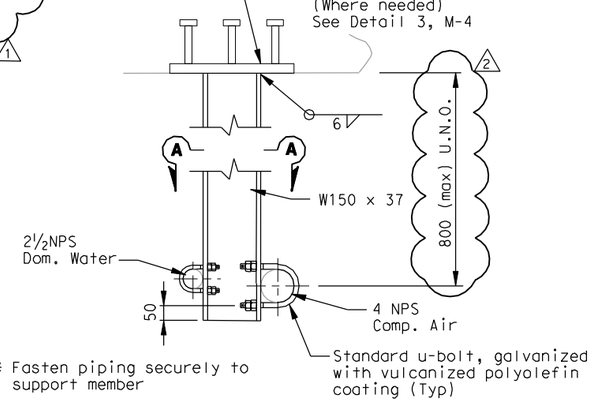

PIPE SUPPORT DETAIL — PS-20

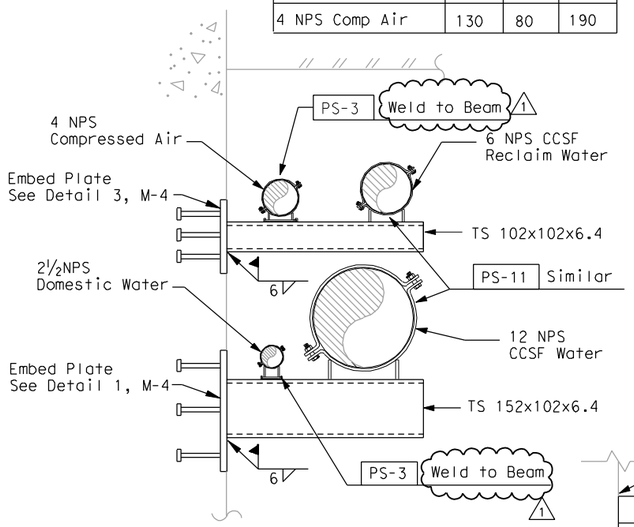

PIPE SUPPORT DETAIL — PS-19

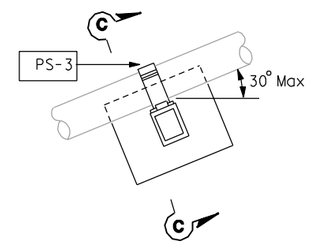

PIPE SUPPORT DETAIL — PS-21

Table for PS-25

Pipe Size	Rod Size (mm)	"A"	"B"	"W"	"Y"	Vertical Travel (mm)	Hot Load (kg)	Cold Load (kg)
2 NPS	16	W150x22	50	6	6	25	365	415
3 NPS	19	W150x22	75	6	6	31	545	615

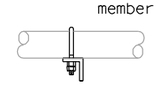

SECTION B-B

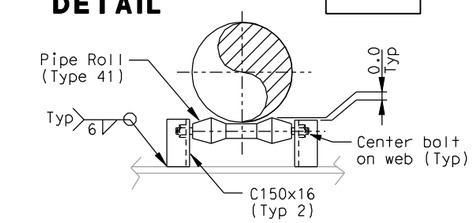

PIPE SUPPORT DETAIL — PS-23

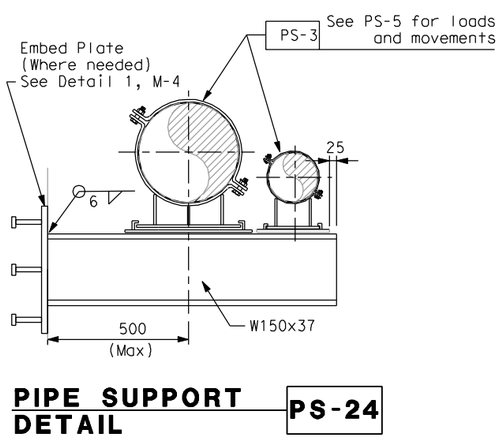

PIPE SUPPORT DETAIL — PS-24

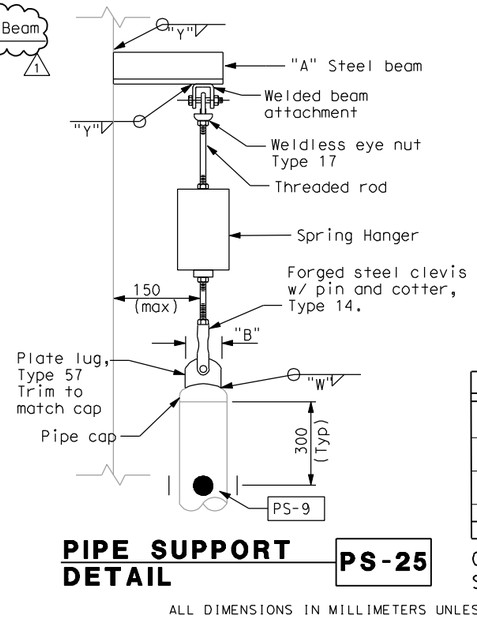

PIPE SUPPORT DETAIL — PS-25

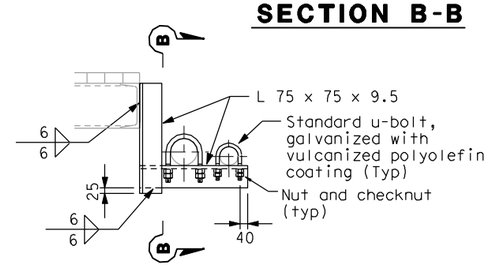

PIPE SUPPORT DETAIL — PS-26

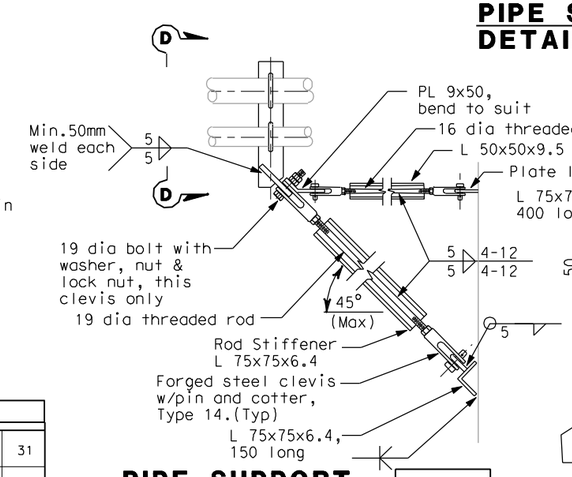

PIPE SUPPORT DETAIL — PS-27

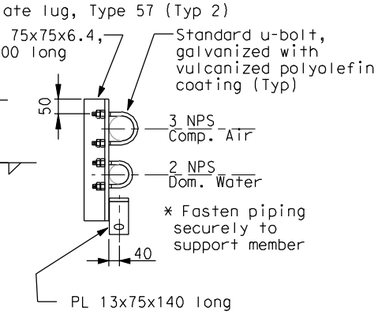

SECTION D-D

MARK	DATE	DESCRIPTIONS	BY	CH'D	CCO#
3	10/6/08	MECHANICAL MODIFICATIONS	CM	BM	31
2	1/18/08	MECHANICAL MODIFICATIONS	VY	BM	31
1	9/05/07	MECHANICAL MODIFICATIONS	BM	RM	31

REQUEST FOR INFORMATION NOT ADDRESSED IN THIS CCO REMAIN IN FORCE

REVISIONS

CONTRACT CHANGE ORDER NO._____
SHEET_____ OF _____

ALL DIMENSIONS IN MILLIMETERS UNLESS OTHERWISE SHOWN

MECHANICAL PIPE SUPPORT DETAILS NO. 4

NO SCALE

M-21

CALCULATED/ DESIGNED BY	BM	DATE 10/31/02	REVISED BY
CHECKED BY	KH	11/15/02	DATE REVISED

PROJECT ENGINEER Rich Newell

STATE OF CALIFORNIA - DEPARTMENT OF TRANSPORTATION

Caltrans

LAST REVISION 00-00-00 DATE PLOTTED => 10/8/2008 TIME PLOTTED => 3:16:40 PM

FOR REDUCED PLANS ORIGINAL SCALE IS IN MILLIMETERS 0 20 40 60 80

USERNAME => reyesl
DGN FILE => T:\13103\MS\pse\SAS Struc\CCO\SAS CCO31\ISSUED 10-06-2008\04-0120f1_0057R03.dgn

CU: 04251 EA 0120F1

DIST.	COUNTY	ROUTE	KILOMETER POST TOTAL PROJECT	SHEET NO.	TOTAL SHEETS
04	SF	80	13.2/13.9	451R2	1204

REGISTERED ENGINEER - CIVIL

12-6-04
PLANS APPROVAL DATE

The State of California or its officers or agents shall not be responsible for the accuracy or completeness of electronic copies of this plan sheet.

REGISTERED PROFESSIONAL ENGINEER John Sun No. C 54648 Exp. 12/31/05 CIVIL STATE OF CALIFORNIA

T.Y. LIN / MOFFATT & NICHOL
825 BATTERY STREET
SAN FRANCISCO, CA 94111

Caltrans now has a web site! To get to the web site, go to: http://www.dot.ca.gov

Caltrans Metric

REQUESTS FOR INFORMATION NOT ADDRESSED IN THIS CCO REMAIN IN FORCE

MARK	DATE	DESCRIPTIONS	BY	CH'D	CCO#
2	02/01/08	MECHANICAL MODIFICATIONS	JD	NV	31
1	07/21/06	W2 CAP BEAM ISD	JD	NV	23

REVISIONS

FOR REVISIONS ONLY

CONTRACT CHANGE ORDER NO. ____
SHEET ____ OF ____

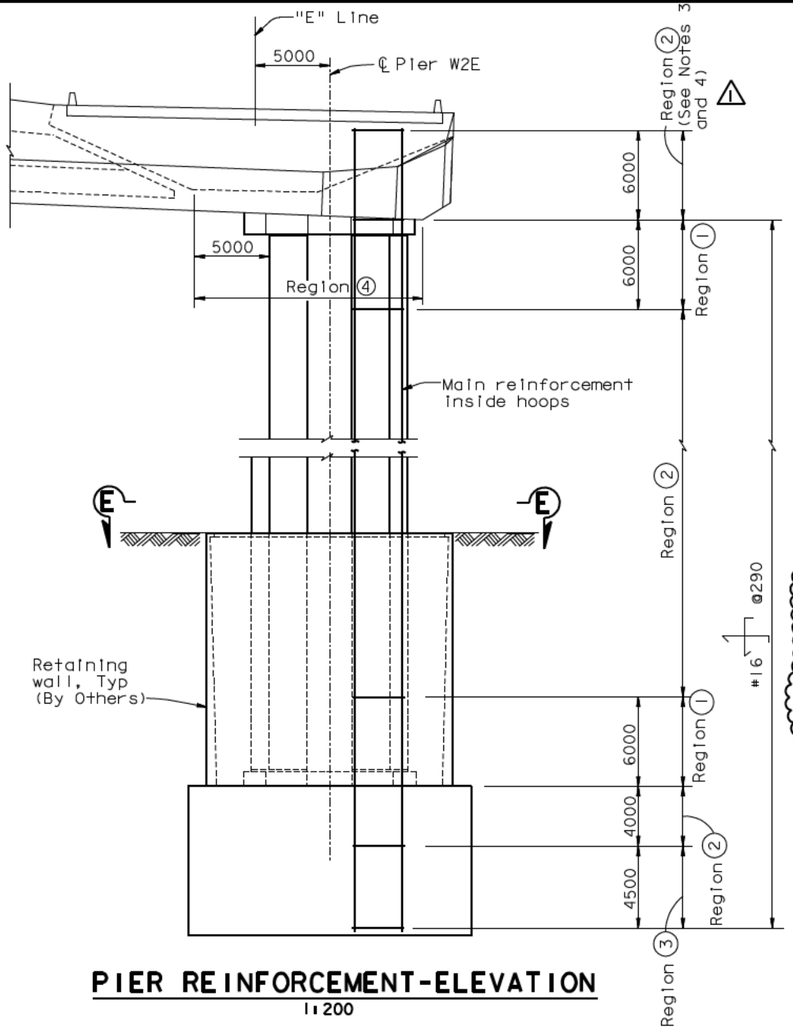

PIER REINFORCEMENT-ELEVATION
1:200

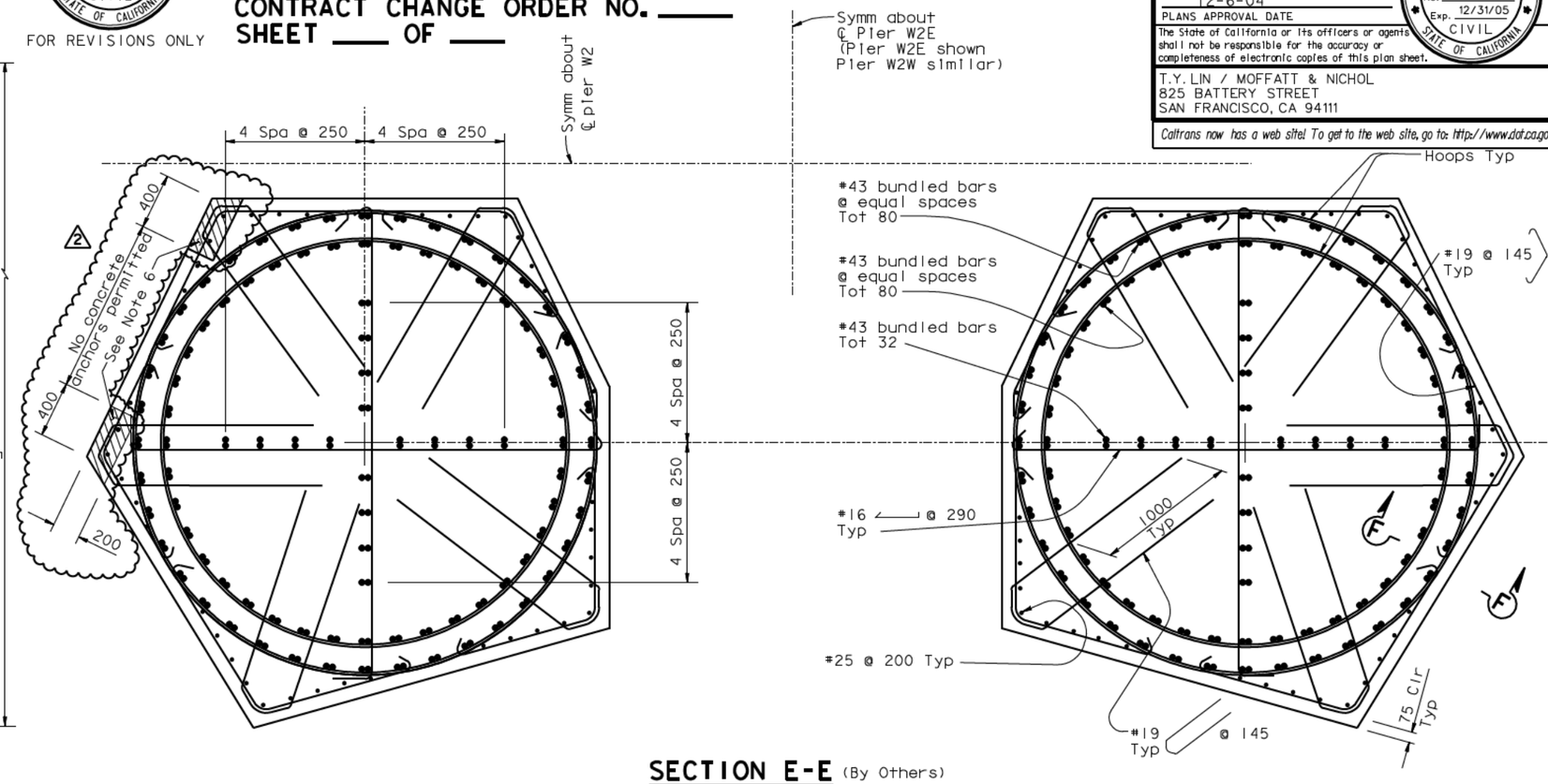

SECTION E-E (By Others)
1:20

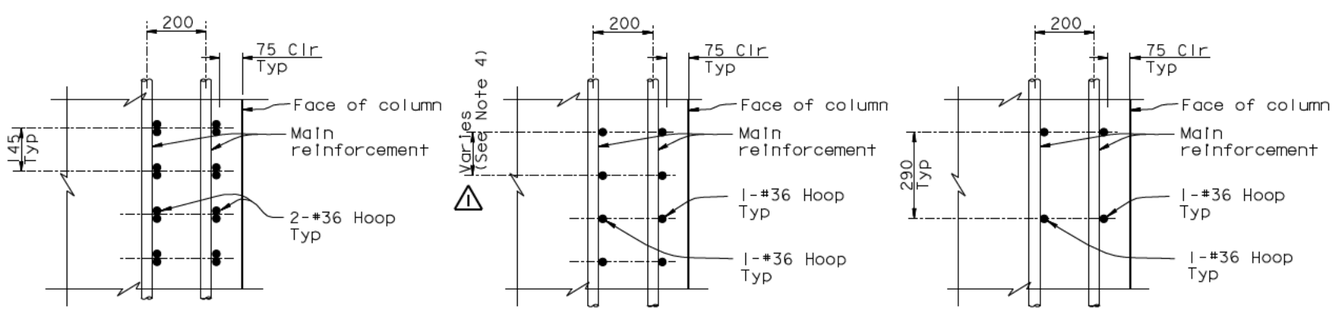

At Region 1 (By Others)

At Region 2 (By Others)

At Region 3 (By Others)

SECTION F-F
1:10

NOTES:

1. Reinforcement is for information only, and by Others.
2. Main reinforcement and hoop reinforcement are "Ultimate" butt splices.
3. Contractor shall remove the corrosion protection from all reinforcing above the pier top slab and shall roughen the existing Pier W2 concrete surface to a minimum of 5 mm amplitude prior to pouring the W2 cap beam concrete. (1)
4. Hoops shall be removed and replaced to facilitate placement of W2 cap beam reinforcement per "W2 Cap Beam Reinforcement Details" sheets.
5. No splices permitted in region 4.
6. Concrete anchors permitted for attachment of mechanical/electrical systems. (2)

ALL DIMENSIONS ARE IN MILLIMETERS UNLESS OTHERWISE SHOWN

100 % PS&E

DATE PLOTTED => 01 FEB 2008 TIME PLOTTED => 14:28:58

USERNAME => ptom

SAN FRANCISCO OAKLAND BAY BRIDGE
EAST SPAN SEISMIC SAFETY PROJECT
SELF-ANCHORED SUSPENSION BRIDGE
(SUPERSTRUCTURE & TOWER)

PIER W2 DETAILS NO. 5

R. Valizadeh/V. Toan/Y.L./W.L./F.C.
DESIGN OVERSIGHT
Roger Valizadeh / Vong Toan / Y. Lu
SIGN OFF DATE 02/01/08

	BY	CHECKED
DESIGN	J. Sun	J. Leventini
DETAILS	J. Duxbury	J. Leventini
QUANTITIES	J. Duxbury	S. Shi

PREPARED FOR THE STATE OF CALIFORNIA DEPARTMENT OF TRANSPORTATION

R. Manzanarez
PROJECT ENGINEER

BRIDGE NO. 34-0006L/R
KILOMETER POST 13.2/13.9

Rev. Date: 5-18-98

ORIGINAL SCALE IN MILLIMETERS FOR REDUCED PLANS 0 10 20 30 40 50 60 70 80 90 100

CU 04
EA 0120F1

DISREGARD PRINTS BEARING EARLIER REVISION DATES

REVISION DATES (PRELIMINARY STAGE ONLY) 05/15/99 08/02/99 05/31/01 04/08/02 07/01/02 12/19/02

SHEET 34R2 OF

FILE -> I:\bb\04-012001\sas\contract plans and cco\cco\in progress\cco#31\dgn\aepir03.dgn

DIST.	COUNTY	ROUTE	KILOMETER POST TOTAL PROJECT	SHEET NO.	TOTAL SHEETS
04	SF	80	13.2/13.9	897R1	1204

Caltrans Metric

REGISTERED ENGINEER - CIVIL

12-6-04
PLANS APPROVAL DATE

REGISTERED PROFESSIONAL ENGINEER Tien Hung Ho No. C 43990 Exp. 6/03/09 CIVIL STATE OF CALIFORNIA

The State of California or its officers or agents shall not be responsible for the accuracy or completeness of electronic copies of this plan sheet.

T.Y. LIN / MOFFATT & NICHOL
825 BATTERY STREET
SAN FRANCISCO, CA 94111

To get to the web site, go to: http://www.dot.ca.gov

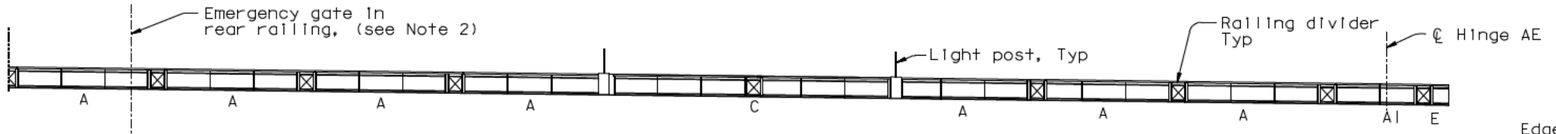

REAR ELEVATION
1:200

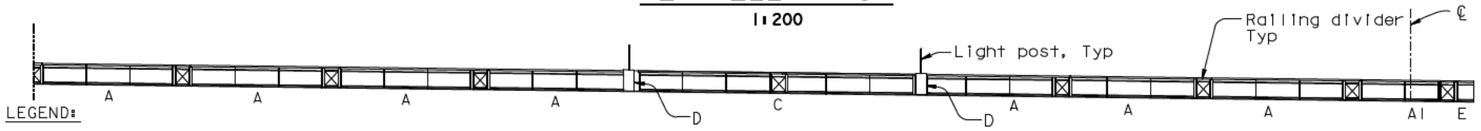

FRONT ELEVATION
1:200

LEGEND:

A Indicates Railing Panel Type Number

(51) Indicates Panel Point

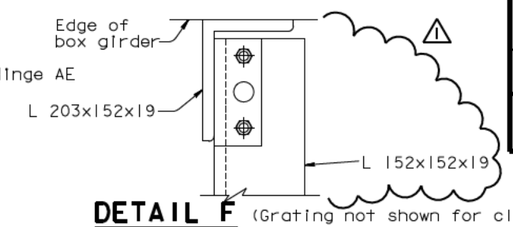

DETAIL F
(Grating not shown for clarity)
1:5

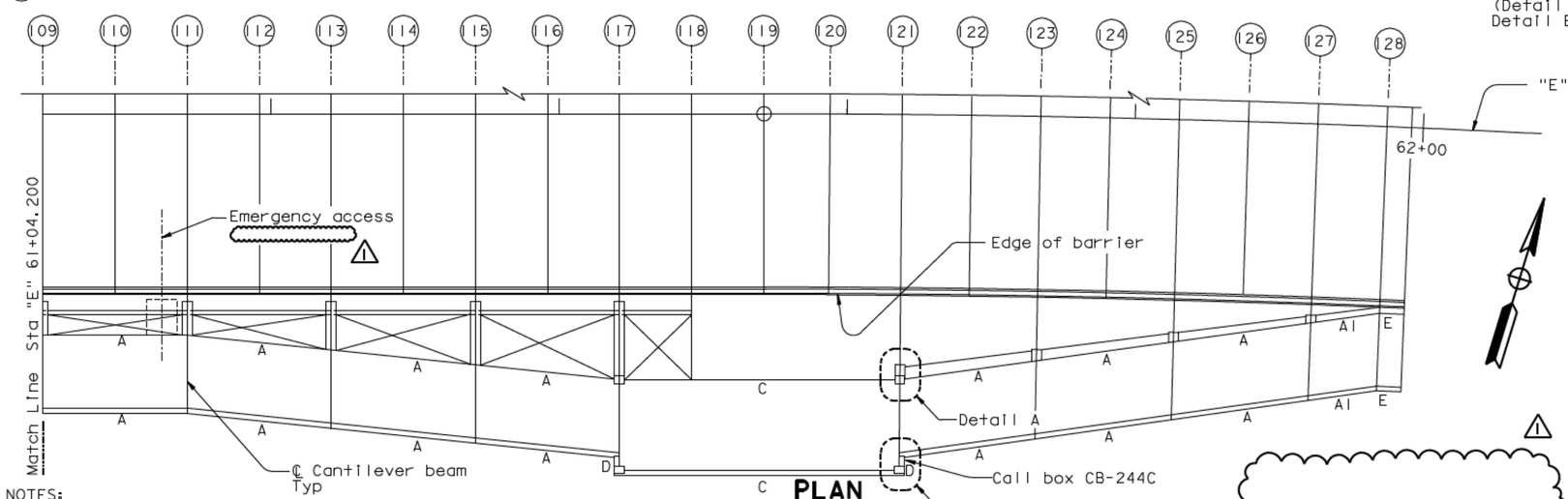

PLAN
1:200

NOTES:

1. For railing panel Type A through Type E, see "Railing Details No.1" sheet.
2. For emergency gate details, see "Railing Details No.5" sheet.
3. For "Detail A" and "Detail B", see "Railing Details No.4" sheet.
4. For call box location and details, see "Road Plans".

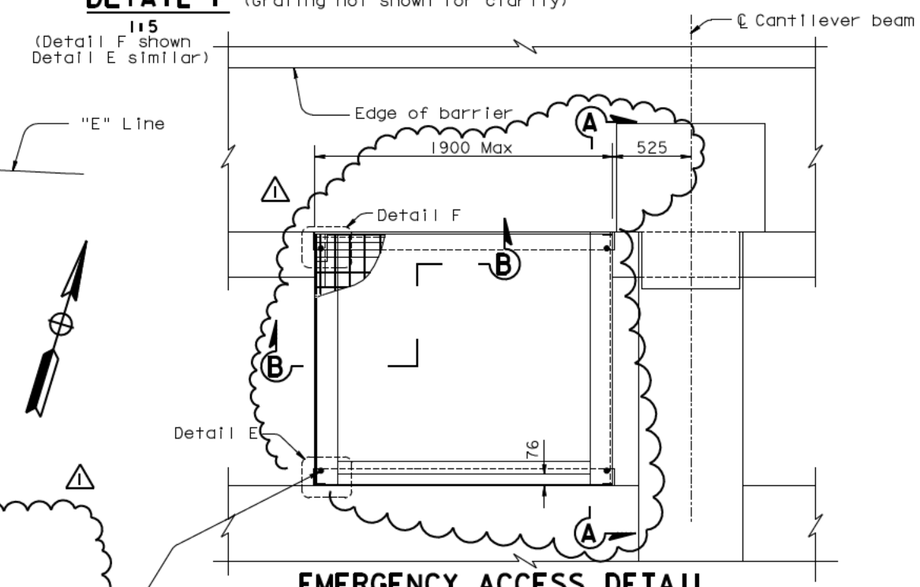

EMERGENCY ACCESS DETAIL
1:20

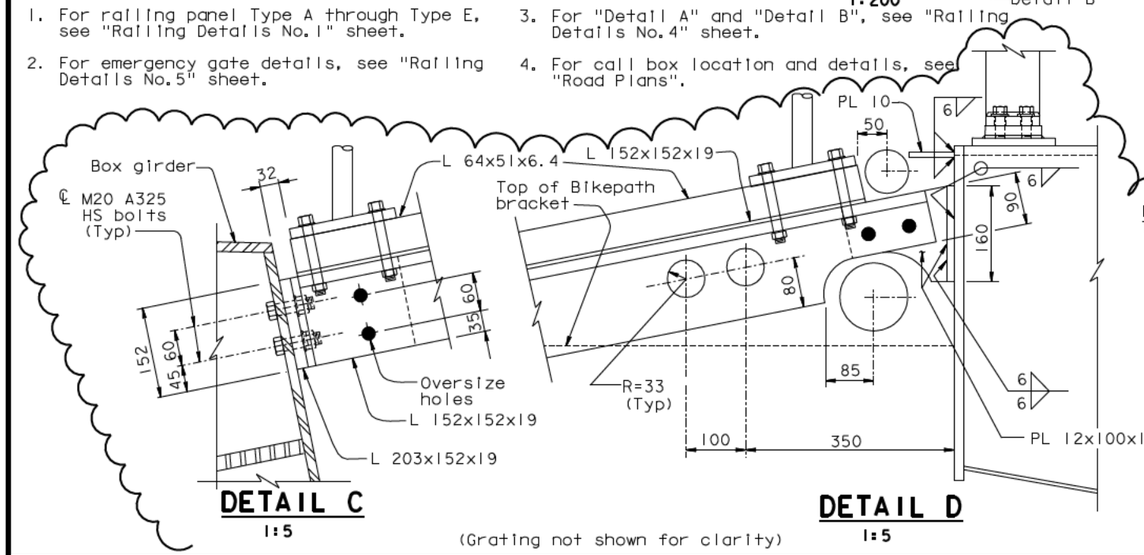

DETAIL C
1:5

DETAIL D
1:5

(Grating not shown for clarity)

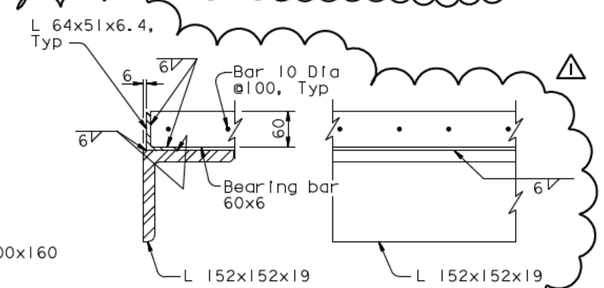

SECTION B-B
1:5

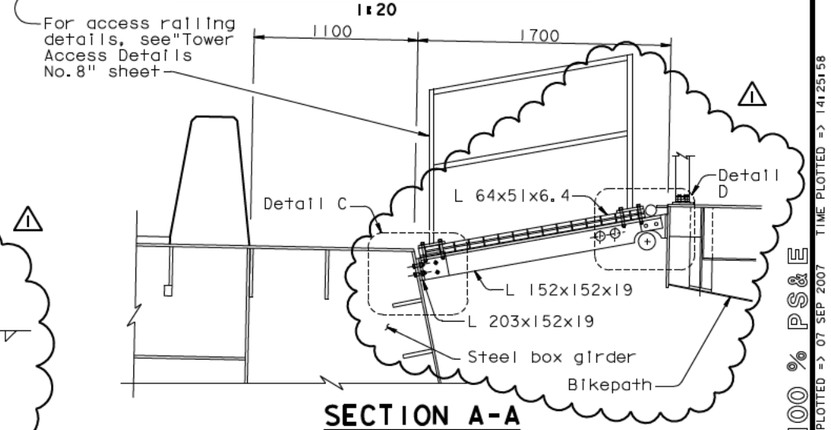

SECTION A-A
1:20

ALL DIMENSIONS ARE IN MILLIMETERS UNLESS OTHERWISE SHOWN

MARK	DATE	DESCRIPTIONS	BY	CH'D	CCO#
1	09/07/07	MECHANICAL MODIFICATIONS	JD	TH	31

REVISIONS

CONTRACT CHANGE ORDER NO. ____
SHEET ___ OF ___

R. Vallzadeh/V. Toan/Y.L./W.L./F.C.
DESIGN OVERSIGHT
SIGN OFF DATE 09/07/07

Rev. Date: 5-18-98

	BY	CHECKED
DESIGN	T. Ho	C. Redfield
DETAILS	R. Xu	C. Redfield
QUANTITIES	G. Baker	K. Cormier

PREPARED FOR THE STATE OF CALIFORNIA DEPARTMENT OF TRANSPORTATION

R. Manzanarez
PROJECT ENGINEER

CU 04
EA 0120F1

BRIDGE NO. 34-0006L/R
KILOMETER POST 13.2/13.9

SAN FRANCISCO OAKLAND BAY BRIDGE
EAST SPAN SEISMIC SAFETY PROJECT
SELF-ANCHORED SUSPENSION BRIDGE
(SUPERSTRUCTURE & TOWER)

RAILING LAYOUT NO. 3

DISREGARD PRINTS BEARING EARLIER REVISION DATES

REVISION DATES (PRELIMINARY STAGE ONLY): 05/15/99 08/02/99 05/31/01 04/08/02 07/01/02 12/19/02

SHEET 480R1 OF

ORIGINAL SCALE IN MILLIMETERS FOR REDUCED PLANS 0 10 20 30 40 50 60 70 80 90 100

FILE -> I:\bb\04-012001\sas\contract plans and cco\cco\In progress\cco#31\dgn\akr1g03.dgn

USERNAME => vlignotovsky DATE PLOTTED => 07 SEP 2007 TIME PLOTTED => 14:25:58

100 % PS&E

DIST.	COUNTY	ROUTE	KILOMETER POST TOTAL PROJECT	SHEET NO.	TOTAL SHEETS
04	SF	80	13.2/13.9	926R1	1204

Caltrans Metric

REGISTERED ENGINEER - CIVIL

12-6-04
PLANS APPROVAL DATE

REGISTERED PROFESSIONAL ENGINEER Marwan N. Nader No. C 054426 Exp. 12/31/07 CIVIL STATE OF CALIFORNIA

The State of California or its officers or agents shall not be responsible for the accuracy or completeness of electronic copies of this plan sheet.

T.Y. LIN / MOFFATT & NICHOL
825 BATTERY STREET
SAN FRANCISCO, CA 94111

Caltrans now has a web site! To get to the web site, go to: http://www.dot.ca.gov

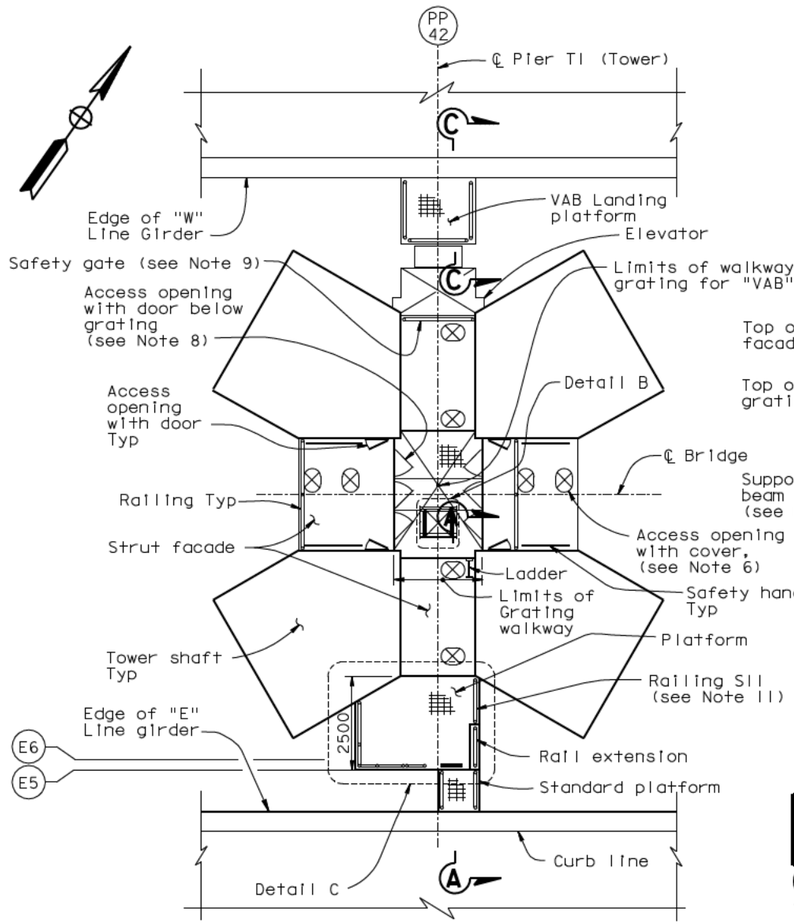

TOWER ACCESS PLATFORMS

SECTION F-F

NTS

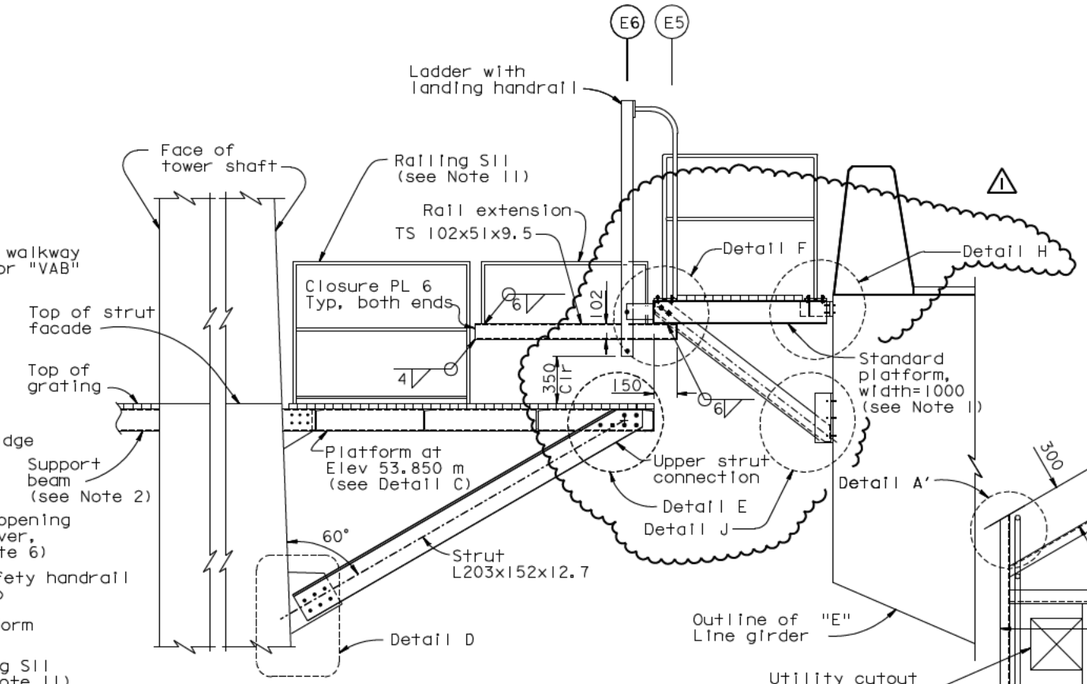

SECTION A-A

1:20

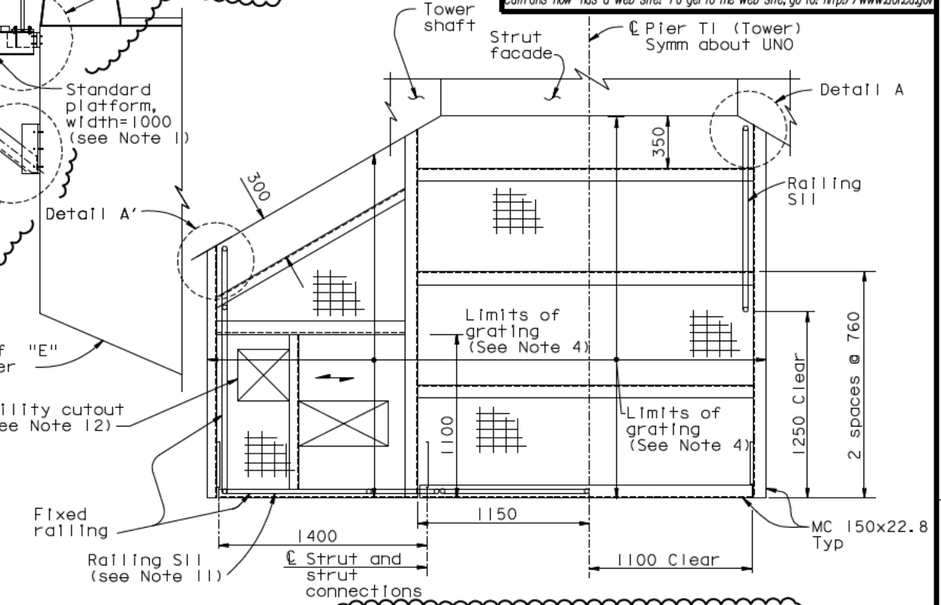

PLATFORM AT ELEV 53.850±

DETAIL C

1:20

MARK	DATE	DESCRIPTIONS	BY	CH'D	CCO#
1	09/07/07	MECHANICAL MODIFICATIONS	JD	MN	31

REVISIONS

CONTRACT CHANGE ORDER NO. ____
SHEET ___ OF ___

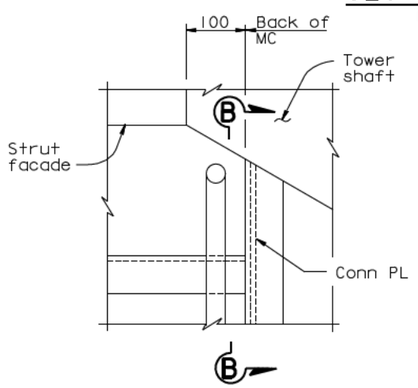

DETAIL A (Detail A shown, Detail A' similar)

1:5

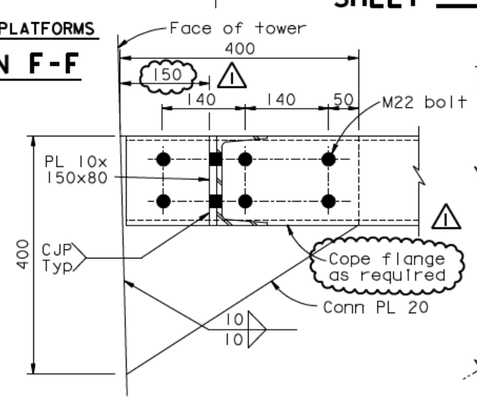

SECTION B-B

1:5

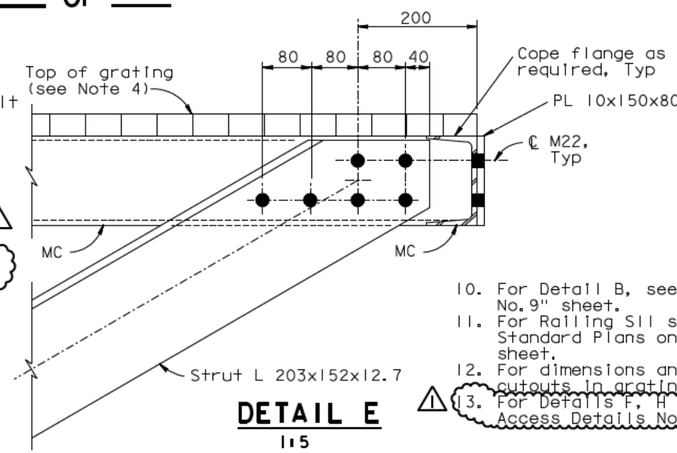

DETAIL E

1:5

LEGEND:

(E6) Girder Working Line 6 on "E" Line.

NOTES:

1. For standard platform details, see "Tower Access Details No.9" sheet.
2. For walkway support beam details, see "Tower Access Details No.3" sheet.
3. For railing details, see "Tower Access Details No.8" sheet.
4. Grating shall be galvanized steel grating with fasteners. Grating working load shall be 14.4 kN/m².
5. For Section C-C, Details D, see "Tower Access Details No. 11" sheet.
6. For access opening cover details, see "Tower Access Details No.9" sheet. All covers are with risers unless noted otherwise.
7. For location of Tower access opening in strut facade, see "Tower Strut Facade Details" sheets.
8. For access opening and door details, see "Tower Access Details No.4" sheet.
9. For safety gate details, see "Road Plans" sheets.
10. For Detail B, see "Tower Access Details No.9" sheet.
11. For Railing S11 see Index to Caltrans Standard Plans on "General Notes No.1" sheet.
12. For dimensions and locations of utility cutouts in grating, see "Road Plans".
13. For Details F, H and J, see "Tower Access Details No. 12" sheet.

ALL DIMENSIONS ARE IN MILLIMETERS UNLESS OTHERWISE SHOWN

R. Vaziadeh/V. Toan/Y.L./W.L./F.C.
DESIGN OVERSIGHT
Y. Lu
SIGN OFF DATE 09/07/07

	BY	CHECKED	
DESIGN	M. Nader		M. Gulyas
DETAILS	G. Baker		L. Rus
QUANTITIES	D. Turner		J. Leventini

PREPARED FOR THE STATE OF CALIFORNIA DEPARTMENT OF TRANSPORTATION

R. Manzanarez
PROJECT ENGINEER

BRIDGE NO. 34-0006L/R
KILOMETER POST 13.2/13.9

SAN FRANCISCO OAKLAND BAY BRIDGE
EAST SPAN SEISMIC SAFETY PROJECT
SELF-ANCHORED SUSPENSION BRIDGE
(SUPERSTRUCTURE & TOWER)

TOWER ACCESS DETAILS NO. 10

Rev. Date: 5-18-98

ORIGINAL SCALE IN MILLIMETERS FOR REDUCED PLANS 0 10 20 30 40 50 60 70 80 90 100

CU 04
EA 0120F1

DISREGARD PRINTS BEARING EARLIER REVISION DATES

REVISION DATES (PRELIMINARY STAGE ONLY) 05/18/99 08/02/99 05/31/01 04/08/02 07/01/02 12/19/02

SHEET 509R1 OF

FILE -> L:\BB\04-012001\SAS\Contract Plans and CCO\CCO\In Progress\CCO#31\DGN\akacc09.dgn

USERNAME => vignatovsky DATE PLOTTED => 10 SEP 2007 TIME PLOTTED => 09:42:57

100% PS&E

DIST.	COUNTY	ROUTE	KILOMETER POST TOTAL PROJECT	SHEET NO.	TOTAL SHEETS
04	SF	80	13.2/13.9	927R1	1204

Caltrans Metric

REGISTERED ENGINEER - CIVIL

12-6-04
PLANS APPROVAL DATE

REGISTERED PROFESSIONAL ENGINEER Marwan N. Nader No. C 54426 Exp. 12/31/07 CIVIL STATE OF CALIFORNIA

The State of California or its officers or agents shall not be responsible for the accuracy or completeness of electronic copies of this plan sheet.

T.Y. LIN / MOFFATT & NICHOL
825 BATTERY STREET
SAN FRANCISCO, CA 94111

Caltrans now has a web site! To get to the web site, go to: http://www.dot.ca.gov

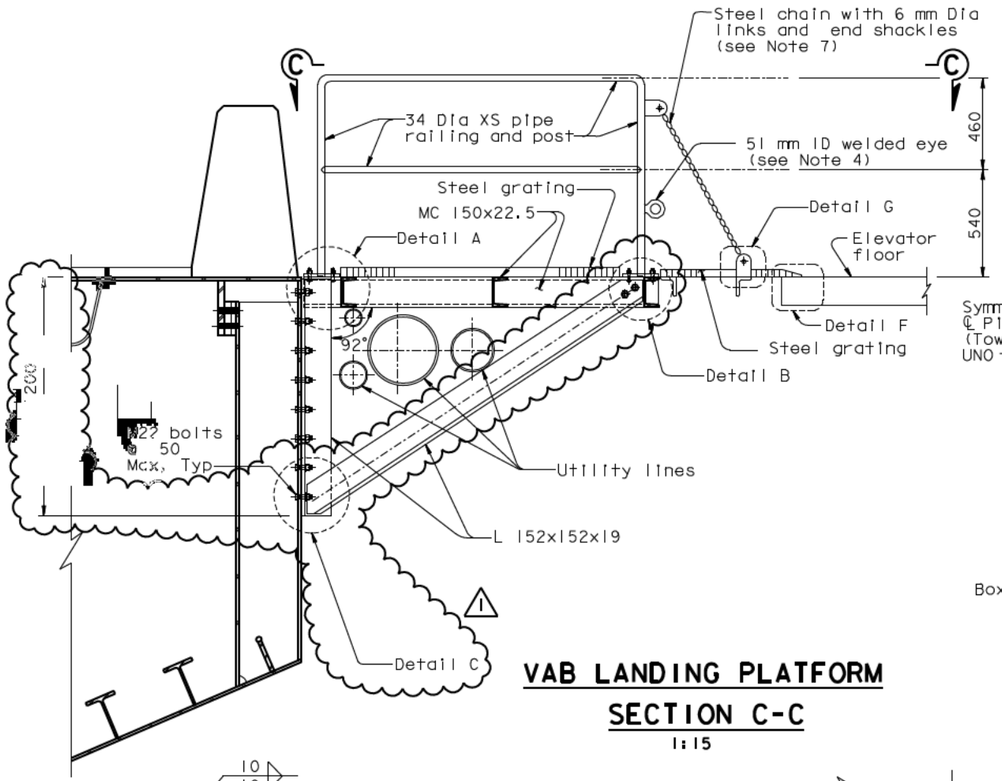

VAB LANDING PLATFORM
SECTION C-C
1:15

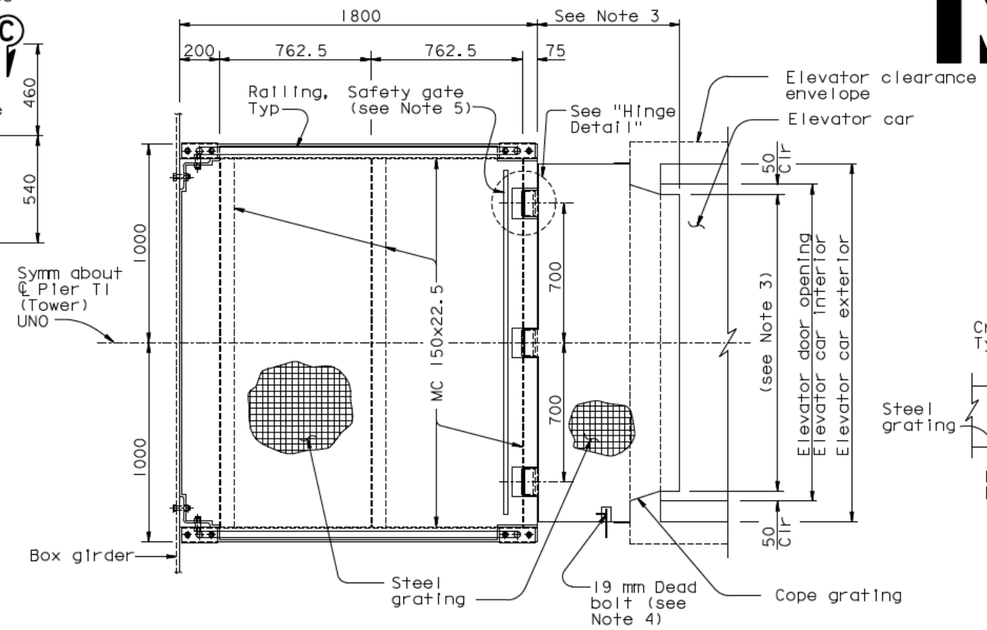

VIEW C-C
1:15

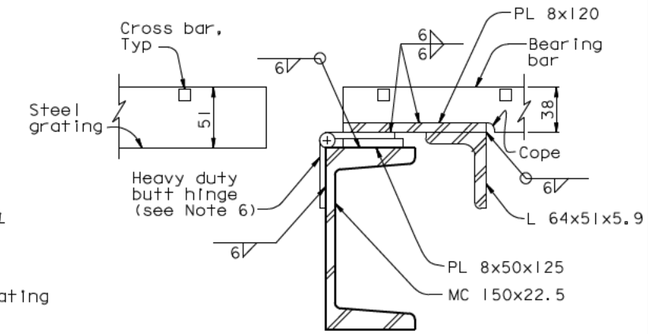

SECTION E-E
1:2.5

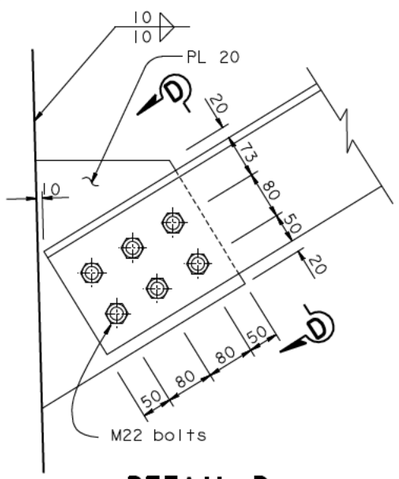

DETAIL D
1:5

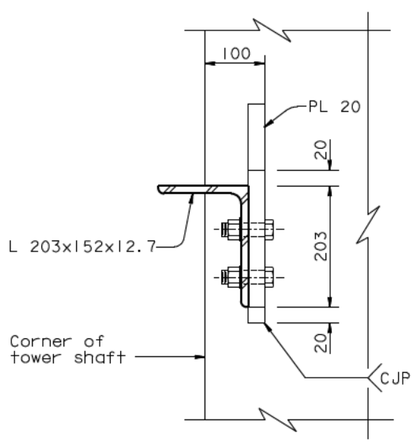

SECTION D-D
1:5

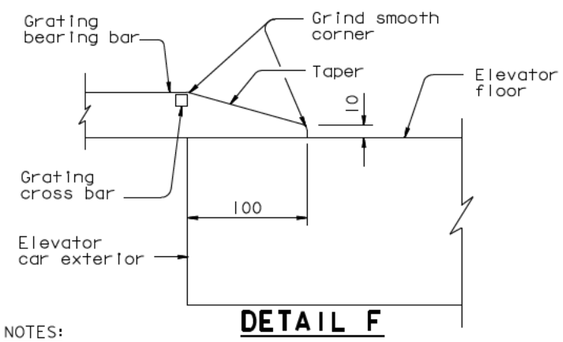

DETAIL F
1:2.5

NOTES:

1. For details A, B, C and G, see "Tower Access Details No. 12" sheet.
2. Elevator clearance envelope matches opening for elevator on "Tower Strut Facade Details No. 2" sheet.
3. Dimensions shall be determined to fit elevator.
4. Dead bolt shall be detailed to meet 51 mm welded eye.
5. For safety gate, see "Road Plans" sheets.
6. Butt hinge shall have a safe working load of 2.5 kN.
7. Chain and shackles should have a safe working load of 7 kN.
8. The hinge shall rest against PL 8 when safety gate is open.

ALL DIMENSIONS ARE IN MILLIMETERS UNLESS OTHERWISE SHOWN

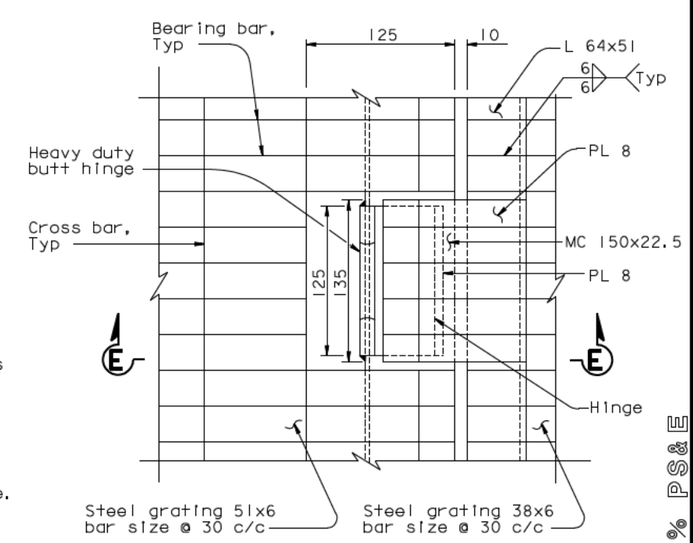

HINGE DETAIL
1:2.5

MARK	DATE	DESCRIPTIONS	BY	CH'D	CCO#
1	09/07/07	MECHANICAL MODIFICATIONS	TH	MN	31

REVISIONS

CONTRACT CHANGE ORDER NO. ____
SHEET ___ OF ___

R. Vallizadeh/V. Toan/Y.L./W.L./F.C.
DESIGN OVERSIGHT
SIGN OFF DATE 09/07/07

Rev. Date: 5-18-98

	BY	CHECKED	
DESIGN	M. Nader	N. Vo	
DETAILS	G. Baker	N. Vo	
QUANTITIES	G. Baker	N. Vo	

PREPARED FOR THE STATE OF CALIFORNIA DEPARTMENT OF TRANSPORTATION

R. Manzanarez
PROJECT ENGINEER

BRIDGE NO. 34-0006L/R
KILOMETER POST 13.2/13.9

CU 04
EA 0120F1

ORIGINAL SCALE IN MILLIMETERS FOR REDUCED PLANS 0 10 20 30 40 50 60 70 80 90 100

DISREGARD PRINTS BEARING EARLIER REVISION DATES 04/08/02 07/01/02 12/19/02

SAN FRANCISCO OAKLAND BAY BRIDGE
EAST SPAN SEISMIC SAFETY PROJECT
SELF-ANCHORED SUSPENSION BRIDGE
(SUPERSTRUCTURE & TOWER)

TOWER ACCESS DETAILS NO. 11

SHEET 510R1 OF

FILE -> L:\BB\04-012001\SAS\Contract Plans and CCO\CCO\In Progress\CCO#31\DGN\akacc11b.dgn

USERNAME => vlignatovsk DATE PLOTTED => 10 SEP 2007 TIME PLOTTED => 09:40:04

100 % PS&E

DIST.	COUNTY	ROUTE	KILOMETER POST TOTAL PROJECT	SHEET NO.	TOTAL SHEETS
04	SF	80	13.2/13.9	928R1	1204

REGISTERED ENGINEER - CIVIL

12-6-04
PLANS APPROVAL DATE

REGISTERED PROFESSIONAL ENGINEER Marwan N. Nader No. C 54426 Exp. 12/31/07 CIVIL STATE OF CALIFORNIA

The State of California or its officers or agents shall not be responsible for the accuracy or completeness of electronic copies of this plan sheet.

T.Y. LIN / MOFFATT & NICHOL
825 BATTERY STREET
SAN FRANCISCO, CA 94111

Caltrans now has a web site! To get to the web site, go to: http://www.dot.ca.gov

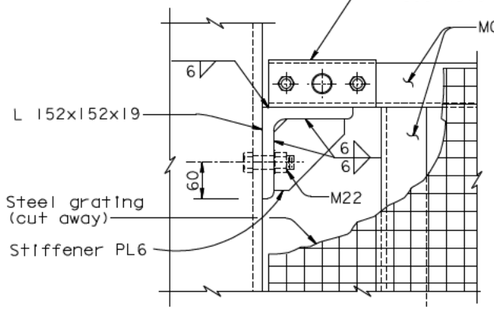

VIEW A-A
1:5

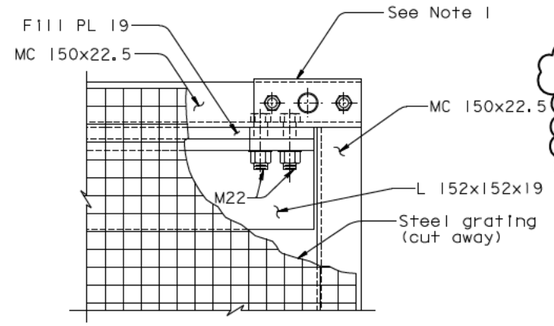

VIEW B-B (Ramp not shown for clarity)
1:5

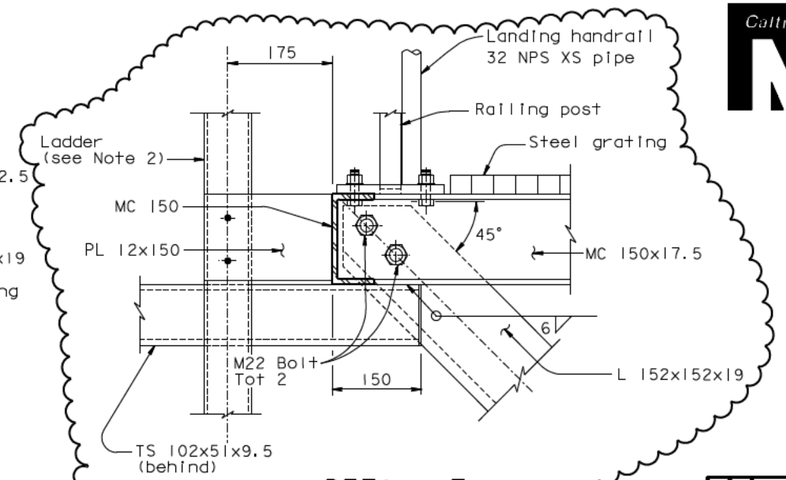

DETAIL F
1:5

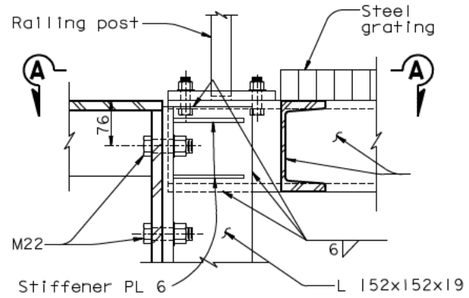

DETAIL A
1:5

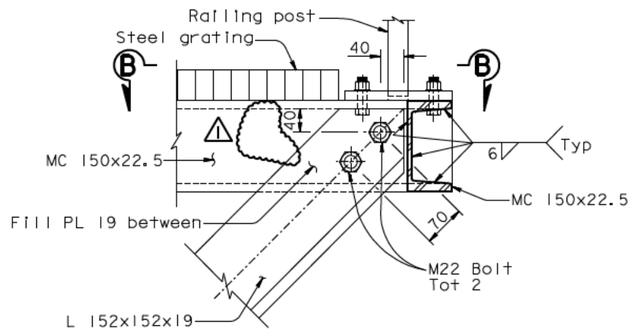

DETAIL B (Ramp not shown for clarity)
1:5

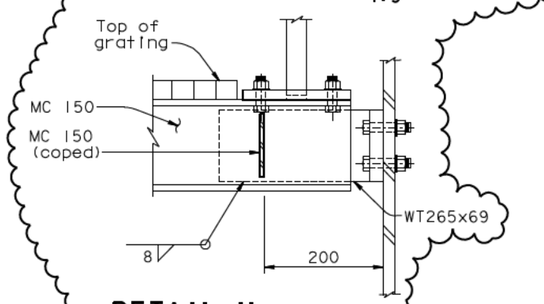

DETAIL H
1:5

MARK	DATE	DESCRIPTIONS	BY	CH'D	CCO#
1	09/07/07	MECHANICAL MODIFICATIONS	JD	MN	31

REVISIONS

CONTRACT CHANGE ORDER NO. ____
SHEET ___ OF ___

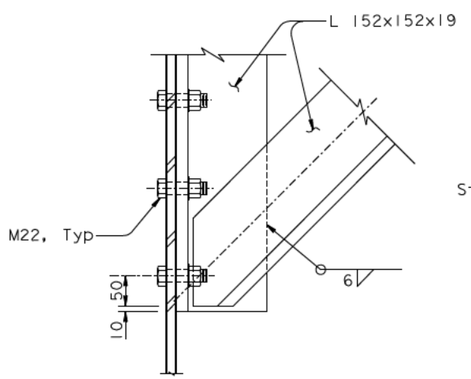

DETAIL C
1:5

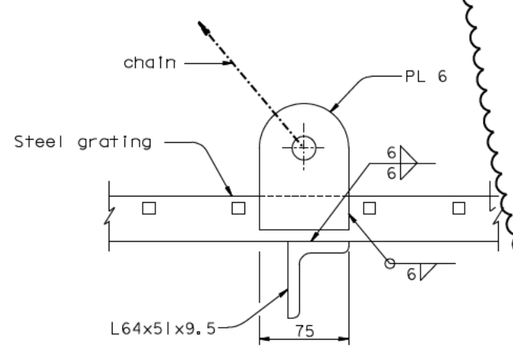

DETAIL G
1:2.5

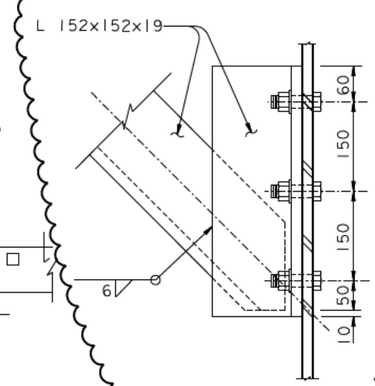

DETAIL J
1:5

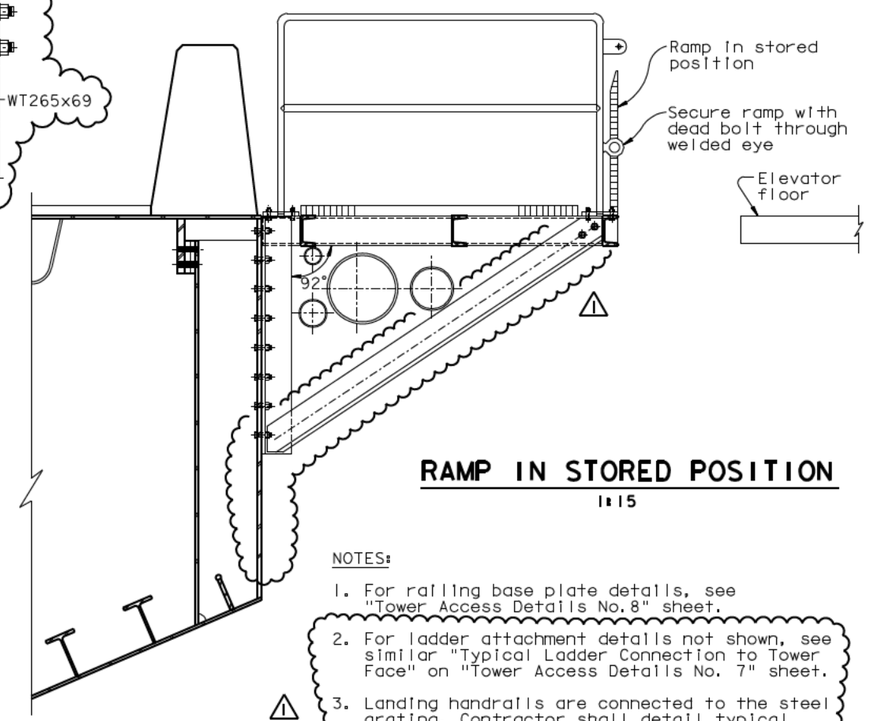

RAMP IN STORED POSITION
1:15

NOTES:

1. For railing base plate details, see "Tower Access Details No.8" sheet.
2. For ladder attachment details not shown, see similar "Typical Ladder Connection to Tower Face" on "Tower Access Details No. 7" sheet.
3. Landing handrails are connected to the steel grating. Contractor shall detail typical connection to fit the supporting structure and may submit alternate designs for Engineer's approval.

ALL DIMENSIONS ARE IN MILLIMETERS UNLESS OTHERWISE SHOWN

SAN FRANCISCO OAKLAND BAY BRIDGE
EAST SPAN SEISMIC SAFETY PROJECT
SELF-ANCHORED SUSPENSION BRIDGE (SUPERSTRUCTURE & TOWER)

TOWER ACCESS DETAILS NO. 12

R. Vallizadeh/V. Toan/Y.L./W.L./F.C.
DESIGN OVERSIGHT
SIGN OFF DATE 09/07/07

	BY	CHECKED
DESIGN	M. Nader	N. Vo
DETAILS	G. Baker	N. Vo
QUANTITIES	G. Baker	N. Vo

PREPARED FOR THE STATE OF CALIFORNIA DEPARTMENT OF TRANSPORTATION

R. Manzanarez
PROJECT ENGINEER

BRIDGE NO. 34-0006L/R
KILOMETER POST 13.2/13.9

CU 04
EA 0120F1

DISREGARD PRINTS BEARING EARLIER REVISION DATES 04/08/02 07/19/02 12/19/02

SHEET 51 OF 1R1

Rev. Date: 5-18-98

ORIGINAL SCALE IN MILLIMETERS FOR REDUCED PLANS 0 10 20 30 40 50 60 70 80 90 100

FILE -> I:\bb\04-01200I\sas\contract plans and cco\cco\in progress\cco#31\dgn\akacc12b.dgn

100 % PS&E

USERNAME => vignatovs DATE PLOTTED => 10 SEP 2007 TIME PLOTTED => 09:38:49

STATE OF CALIFORNIA - DEPARTMENT OF TRANSPORTATION

CONTRACT CHANGE ORDER

Change Requested by: Engineer

CCO: 31 Suppl. No. 1 Contract No. 04 – 0120F4 Road SF-80-13.2/13.9 **FED. AID LOC.:**

To: **AMERICAN BRIDGE/FLUOR ENTERPRISES INC A JOINT VENTURE**

You are directed to make the following changes from the plans and specifications or do the following described work not included in the plans and specifications for this contract. ***NOTE: This change order is not effective until approved by the Engineer.***

Description of work to be done, estimate of quantities and prices to be paid. (Segregate between additional work at contract price, agreed price and force account.) Unless otherwise stated, rates for rental of equipment cover only such time as equipment is actually used and no allowance will be made for idle time. This last percentage shown is the net accumulated increase or decrease from the original quantity in the Engineer's Estimate.

Adjustment of Compensation at Lump Sum Price:

This change order shall close the deferred time element of change order 31S0.

Adjustment of Compensation at Lump Sum.....$0

Estimated Cost: Increase ☐ Decrease ☐ $0.00

By reason of this order the time of completion will be adjusted as follows: 0 Days

Submitted by

Signature Kannu Balan	**Resident Engineer** Kannu Balan, Senior T.E.	**Date** 12-1-10

Approval Recommended by

Signature	**Senior Transportation Engineer** William Shedd, Senior T.E.	**Date** 12-3-10

Engineer Approval by

Signature Peter Siegenthaler	**Principal Transportation Engineer** Peter Siegenthaler, Prin. T.E.	**Date** 12-28-10

We the undersigned contractor, have given careful consideration to the change proposed and agree, if this proposal is approved, that we will provide all equipment, furnish the materials, except as otherwise be noted above, and perform all services necessary for the work above specified, and will accept as full payment therefor the prices shown above.

NOTE: If you, the contractor, do not sign acceptance of this order, your attention is directed to the requirements of the specifications as to proceeding with the ordered work and filing a written protest within the time therein specified.

Contractor Acceptance by

Signature	(Print name and title) BRIAN A. PETERSEN - PROJECT DIRECTOR	**Date** 22DEC10

STATE OF CALIFORNIA - DEPARTMENT OF TRANSPORTATION

CONTRACT CHANGE ORDER MEMORANDUM

TO: Pete Siegenthaler, Prin TE /	FILE: **E.A.** 04 - 0120F4
FROM: Kannu Balan, Senior TE	**CO-RTE-PM** SF-80-13.2/13.9
	FED. NO.
CCO#: **31** SUPPLEMENT#: **1** Category Code: **CHPT**	CONTINGENCY BALANCE (incl. this change) **$0.00**
COST: **$0.00** INCREASE ☐ DECREASE ☐	HEADQUARTERS APPROVAL REQUIRED? ☐ YES ☑ NO
SUPPLEMENTAL FUNDS PROVIDED: **$0.00**	IS THIS REQUEST IN ACCORDANCE WITH ENVIRONMENTAL DOCUMENTS? ☑ YES ☐ NO
CCO DESCRIPTION: Mechanical Mod. Time Adjustments	**PROJECT DESCRIPTION:** CONSTRUCT SELF-ANCHORED SUSPENSION BRIDGE

Original Contract Time:	Time Adj. This Change:	Previously Approved CCO Time Adjustments:	Percentage Time Adjusted: (including this change)	Total # of Unreconciled Deferred Time CCO(s): (including this change)
2490 Day(s)	**0** Day(s)	**501** Day(s)	**20** %	**3**

THIS CHANGE ORDER PROVIDES FOR:

Closing out the Deferred Time element for CCO 31S0.

It has been determined that the work from Contract Change Order No. 31S0 is not the controlling operation and it will not have any impact on the project completion date.

This change order received concurrence from Peter Siegenthaler (Principal TE) and Rick Morrow (Structure Rep). Design and Maintenance concurrence are not required.

CONCURRED BY:			
Construction Engineer:	PCE, Pete Siegenthaler, Prin TE	Date	12/1/10
Bridge Engineer:	Struct Rep, Rick Morrow, Sup TE	Date	12/1/10
Project Engineer:		Date	
Project Manager:		Date	
FHWA Rep.:		Date	
Environmental:		Date	
Other (specify):		Date	
Other (specify):		Date	
District Prior Approval By:		Date	
HQ (Issue Approve) By:		Date	
Resident Engineer's Signature:		Date	

for BALAN

ESTIMATE OF COST

	THIS REQUEST	TOTAL TO DATE
ITEMS	$0.00	$0.00
FORCE ACCOUNT	$0.00	$0.00
AGREED PRICE	$0.00	$0.00
ADJUSTMENT	$0.00	$0.00
TOTAL	$0.00	$0.00

FEDERAL PARTICIPATION

☐ PARTICIPATING ☐ PARTICIPATING IN PART ☑ NONE
☐ NON-PARTICIPATING (MAINTENANCE) ☐ NON-PARTICIPATING

FEDERAL SEGREGATION (if more than one Funding Source or P.I.P. type)
☐ CCO FUNDED PER CONTRACT ☐ CCO FUNDED AS FOLLOWS

FEDERAL FUNDING SOURCE	PERCENT

ADA Notice: For individuals with sensory disabilities, this document is available in alternate formats. For information call: (916) 654-6410 or TDD (916) 654-3880 or write Records and Forms Management, 1120 N Street, MS-89, Sacramento, CA 95814.

STATE OF CALIFORNIA - DEPARTMENT OF TRANSPORTATION

CONTRACT CHANGE ORDER

Change Requested by: Engineer

CCO 32	Suppl. No. 0	Contract No. 04 - 0120F4	Road SF-80-13.2/13.9	FED. AID LOC.:

To: **AMERICAN BRIDGE/FLUOR ENTERPRISES INC A JOINT VENT**

You are directed to make the following changes from the plans and specifications or do the following described work not included in the plans and specifications for this contract. ***NOTE: This change order is not effective until approved by the Engineer.***

Description of work to be done, estimate of quantities and prices to be paid. (Segregate between additional work at contract price, agreed price and force account.) Unless otherwise stated, rates for rental of equipment cover only such time as equipment is actually used and no allowance will be made for idle time. This last percentage shown is the net accumulated increase or decrease from the original quantity in the Engineer's Estimate.

Adjustment of Compensation at Lump Sum:

Revise the Special Provisions Section 10-4.06 "DEHUMIDIFIER SYSTEM", as shown on sheet 2 of this change order.

The following revised plan sheets detail the changes addressed in this change order: 61R1, 960R1 and 961R1 (of 1204), as shown on sheets 3, 4 and 5 of this change order.

This change order resolves the costs associated with Contractor Request For Information (RFI) Nos. 122R0, 122R1, 124R0 and 125R0 with respect to changes listed above.

For this work, the Contractor will receive a Lump Sum price of $13,901.00. This sum constitutes full and complete compensation for furnishing all labor, material, tools and incidentals including all markups by reason of this Change.

Cost of Adjustment of Compensation at Lump Sum $13,901.00

Estimated Cost: Increase ☑ Decrease ☐ **$13,901.00**

By reason of this order the time of completion will be adjusted as follows: 0 days

Submitted by

Signature	Resident Engineer William Shedd for, Gary Pursell, P.E., Sup.T.E.	Date 3-11-09

Approval Recommended by

Signature	Supervising Bridge Engineer Richard Morrow, P.E., Sup. BE	Date 3/12/09

Engineer Approval by

Signature	Supervising Transportation Engineer Gary Pursell, P.E., Sup. TE	Date 4/16/09

We the undersigned contractor, have given careful consideration to the change proposed and agree, if this proposal is approved, that we will provide all equipment, furnish the materials, except as may otherwise be noted above, and perform all services necessary for the work above specified, and will accept as full payment therefor the prices shown above.

NOTE: If you, the contractor, do not sign acceptance of this order, your attention is directed to the requirements of the specifications as to proceeding with the ordered work and filing a written protest within the time therein specified.

Contractor Acceptance by

Signature	(Print name and title) Michael D. Flowers Project Director	Date 4-15-09

A. DEHUMIDIFIER SYSTEM INSTALLATION AND MAINTENANCE

1. In the Special Provisions, Section 10-4.06, "DEHUMIDIFIER SYSTEM," subsection "MATERIALS," subsection "Moisture Removal Capacity Control," is revised as follows:

"Moisture Removal Capacity Control
The dehumidifier shall operate automatically, in response to the control system supplied by the manufacturer and interface with the Direct Digital Control (DDC) system:

A. On-off control
The dehumidifier's reactivation air flow system shall turn on and off in response to the humidistat, which shall be provided by the manufacturer and mounted in the ~~specified~~ location specified below and connected to the dehumidifier by the installing contractor.
B. The dehumidifier shall operate automatically, in response to the control system supplied by the manufacturer.
C. The dehumidifier shall turn on and off in response to the sensor specified, which shall be provided by the manufacturer and mounted in the specified location and connected to the dehumidifier by the installing contractor. Instruments for humidity measurement if located in duct work, shall be located in the return system upstream of any mixing point with outside air and be installed per dehumidifier equipment manufacturer's recommendations.
D. The process fan shall normally run continuously to provide air movement and air mixing throughout the dehumidified space.
E. The humidistat shall be located in the return air duct system, downstream of all return air branches and upstream of any outside air duct connections. If the unit's return system is not ducted, the humidistat shall be located at, or adjacent to and within the affected area of the return inlet of the unit."

2. In the Special Provisions, Section 10-4.06, "DEHUMIDIFIER SYSTEM," subsection "DUCTWORK AND ACCESSORIES," subsection "Ductwork," add Item I as follows:

"I. Dampers shall be manual control with position locking hardware and shall not be motorized."

3. In the Special Provisions, Section 10-4.06, "DEHUMIDIFIER SYSTEM," subsection "PERFORMANCE TESTS," Item B is revised as follows:

"B. Performance test each dehumidifying system to meet the performance requirements indicated on the Technical Data Sheet furnished by the manufacturer. Performance testing shall be conducted by an independent certified testing company and control contractor. Tests shall be performed in presence of Engineer and a representative of the ~~of~~ dehumidifier manufacturer. The operational position setting of the dampers shall be locked in place once distribution of airflow has been balanced."

4. In the Special Provisions, Section 10-4.06, "DEHUMIDIFIER SYSTEM," subsection "PERFORMANCE TESTS," Item D, revise the first sentence as follows:

"D. Place the system in full automatic operation, with automatic controls set in accordance with maximum design condition of ~~45~~ 40 percent, plus or minus 5 percent, relative humidity between 7.2 °C and 24 °C , in accordance with the following:"

REGISTERED PROFESSIONAL ENGINEER
MARWAN N. NADER
No. C-054426
Exp. 12/31/02
CIVIL
STATE OF CALIFORNIA

DIST	COUNTY	ROUTE	KILOMETER POST TOTAL PROJECT	SHEET No	TOTAL SHEETS
04	SF	80	13.2/13.9	61R1	1204

Caltrans Metric

REGISTERED MECHANICAL ENGINEER

12-6-04
PLANS APPROVAL DATE

T.Y. LIN / MOFFATT & NICHOL
825 BATTERY STREET
SAN FRANCISCO, CA 94111

REGISTERED PROFESSIONAL ENGINEER ROBERT E. BETHEL No. M018543 Exp. 9/30/06 MECHANICAL STATE OF CALIFORNIA

The State of California or its officers or agents shall not be responsible for the accuracy or completeness of electronic copies of this plan sheet.

Caltrans now has a web site! To get to the web site, go to http://www.dot.ca.gov

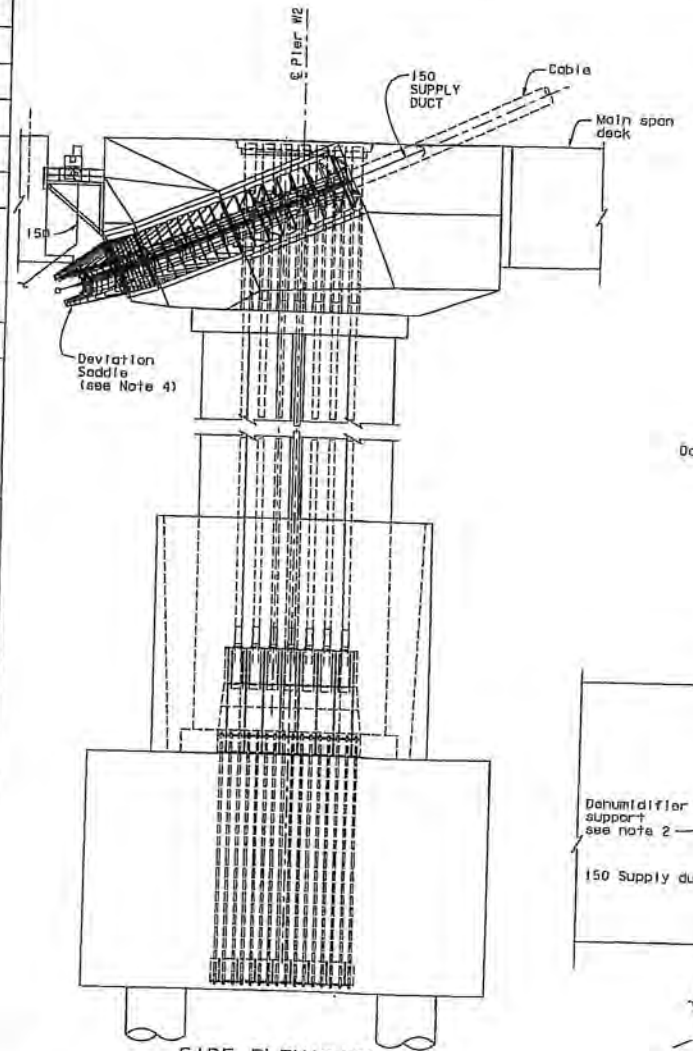

SIDE ELEVATION
1:100

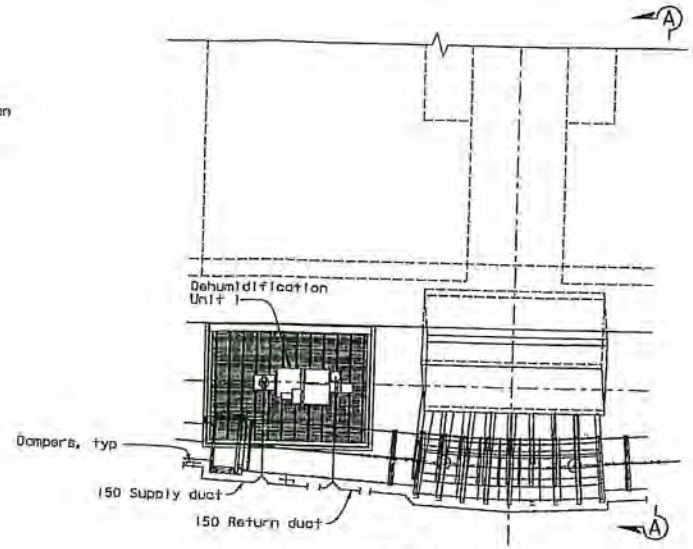

DETAIL A
1:80

REGISTERED PROFESSIONAL ENGINEER JOHN H. BIRCH No. C 41547 Exp. 12/31/07 CIVIL STATE OF CALIFORNIA

FOR REVISIONS ONLY

MARK	DATE	DESCRIPTIONS	BY	CH'D	CCO#
1	05/23/07	DEHUMIDIFICATION SYSTEM	JB	AS	32

REVISIONS

CONTRACT CHANGE ORDER NO. 32
SHEET 3 OF 5

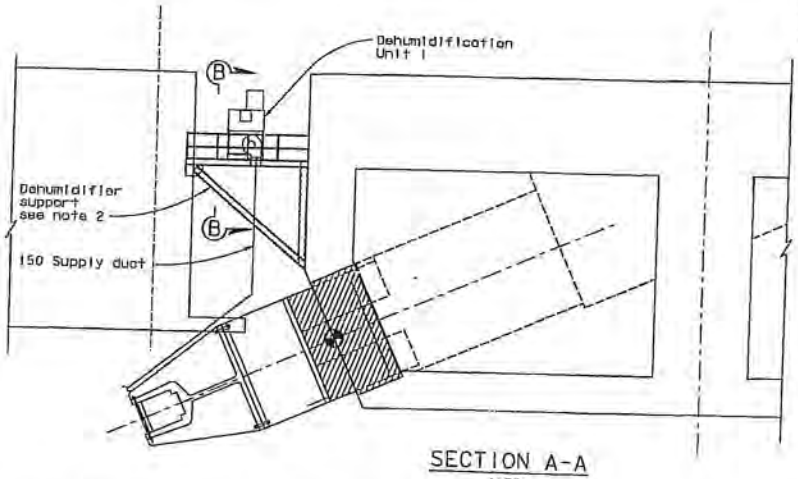

SECTION A-A
1:50

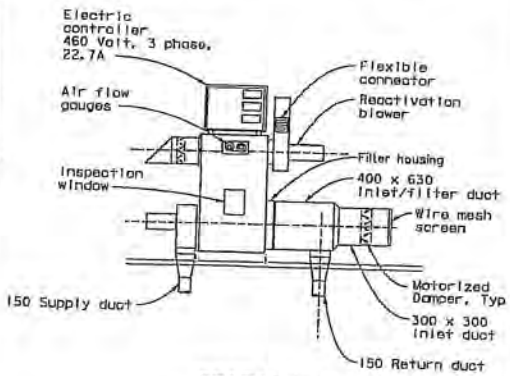

SECTION B-B (See Note 5)
1:20

NOTES:

1. For location of Detail A, see "West Cable Anchorage Dehumidification Detail No.1" sheet.
2. For dehumidifier support, see Bridge Plans.
3. For duct connection to cable shroud, see Bridge Plans.
4. Views of deviation saddle are for illustration only. For deviation saddle details, see "West Deviation Saddle Details" sheets.
5. Exhaust shall be oriented away from service personnel. Exhaust duct may be extended out or down. It may also be extended up, provided a rain hood is used.

WEST CABLE ANCHORAGE DEHUMIDIFICATION DETAIL NO. 2

ALL DIMENSION ARE IN MILLIMETERS UNLESS OTHERWISE SHOWN

M-25

SAS STRUCTURE

STATE OF CALIFORNIA - DEPARTMENT OF TRANSPORTATION

Caltrans

DESIGN OVERSIGHT: Bob Zandipour

CALCULATED/DESIGNED BY: ES | DATE: 5/3/02 | REVISED BY:
CHECKED BY: RB | 5/3/02 | DATE REVISED:

DATE PLOTTED => 21 MAY 2007

FILE => I:\bb\04-012001\sas\contract plans and ccs\ccs\in progress\ccs#32\40120fub025.dgn

FA 012051

DIST.	COUNTY	ROUTE	KILOMETER POST TOTAL PROJECT	SHEET NO.	TOTAL SHEETS
04	SF	80	13.2/13.9	960R	1204

George Baker
REGISTERED ENGINEER - CIVIL
1-27-03
PLANS APPROVAL DATE
The State of California or its officers or agents shall not be responsible for the accuracy or completeness of electronic copies of this plan sheet.

REGISTERED PROFESSIONAL ENGINEER George S. Baker No. C 57112 Exp. 12/31/03 CIVIL STATE OF CALIFORNIA

T.Y. LIN / MOFFATT & NICHOL
825 BATTERY STREET
SAN FRANCISCO, CA 94111

To get to the web site, go to: http://www.dot.ca.gov

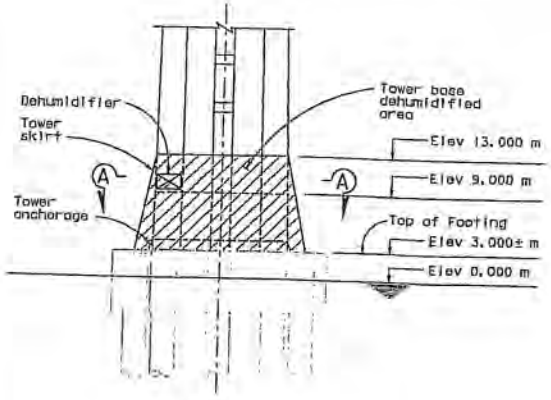

DETAIL B Looking South
1:250

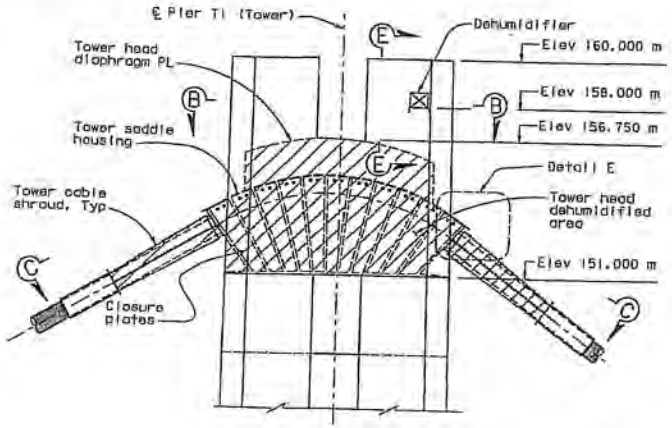

DETAIL C Looking South
1:100

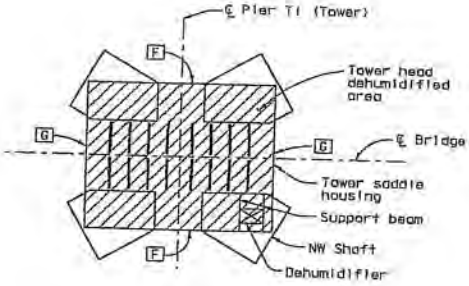

SECTION B-B
1:100

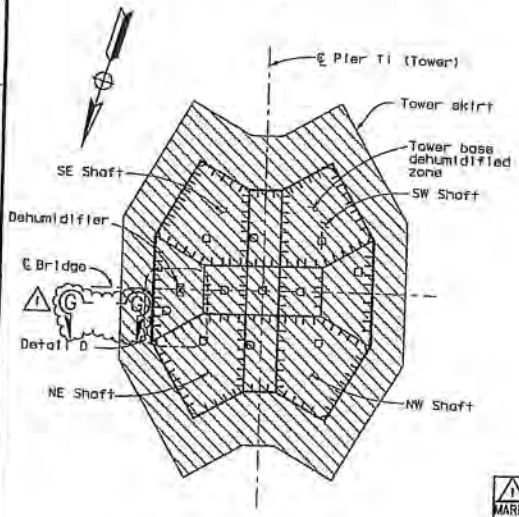

SECTION A-A
1:150

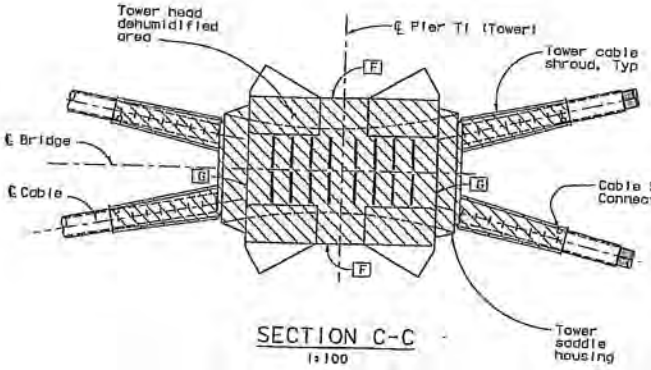

SECTION C-C
1:100

LEGEND:

Limits of dehumidification

Dehumidifier

NOTES:

1. For details of tower head walls F and G, and diaphragm PL, see "Tower Head Details" sheets.
2. For tower saddle housing and closure plates, see "Tower Saddle Housing" sheets.
3. For tower cable shroud details, see "Tower Cable Shroud Details" sheets.
4. For Details D, E and Sections E-E and G-G see "Dehumidification Support Details No.5" sheet.
5. For Cable Shroud Duct Connection, see "Dehumidification Support Details No.5" sheet.

MARK	DATE	DESCRIPTIONS	BY	CH'D	CCO#
1	05/21/03	DEHUMIDIFICATION SYSTEM	GB	DT	32

REVISIONS

CONTRACT CHANGE ORDER NO. 32
SHEET 4 OF 5

REGISTERED PROFESSIONAL ENGINEER Daniel V. Turner No. C 65033 Exp. 06/30/03 CIVIL STATE OF CALIFORNIA

FOR REVISIONS ONLY

ALL DIMENSIONS ARE IN MILLIMETERS UNLESS OTHERWISE SHOWN

N. Valizadeh/V. Tean/Y.L./N.L./F.C.
DESIGN OVERSIGHT
Ron Valizadeh / Vaughn Tean / Y. Liu
SIGN OFF DATE 03/28/03
Rev. Date 8-12-03

DESIGN	G. Baker	CHECKED	T. Ho
DETAILS	C. Mauch	CHECKED	T. Ho
QUANTITIES	C. Mauch	CHECKED	D. Harrison

ORIGINAL SCALE IN MILLIMETERS FOR REDUCED PLANS 0 10 20 30 40 50 60 70 80 90 100

PREPARED FOR THE STATE OF CALIFORNIA DEPARTMENT OF TRANSPORTATION

N. Manzanarez
PROJECT ENGINEER

CU 04
EA 0120F1

BRIDGE NO. 34-0006L/R
KILOMETER POST 13.2/13.9

SAN FRANCISCO OAKLAND BAY BRIDGE
EAST SPAN SEISMIC SAFETY PROJECT
SELF-ANCHORED SUSPENSION BRIDGE
(SUPERSTRUCTURE & TOWER)

DEHUMIDIFICATION SUPPORT DETAILS NO.4

REVISION DATES (PRELIMINARY STAGE ONLY)
USERS | CHECKS | REVIEW

SHEET 543R OF

FILE => L:\BAN04-0)2001\SAS\Contract Plans and CCO\CCO's In Progress\CCO#32\akden04.dgn

100 % PSAE

FILE PLOTTED => 11/18/03
WORKIMAGE => V:\DGN\DGN\DATE PLOTTED => 21 MAY 2003

DIST.	COUNTY	ROUTE	KILOMETER POST TOTAL PROJECT	SHEET NO.	TOTAL SHEETS
04	SF	80	13.2/13.9	961R1	1204

George Baker
REGISTERED ENGINEER - CIVIL
1-27-03
PLANS APPROVAL DATE
The State of California or its officers or agents shall not be responsible for the accuracy or completeness of electronic copies of this plan sheet.

REGISTERED PROFESSIONAL ENGINEER George S. Baker No. C 57112 Exp. 12/31/05 CIVIL STATE OF CALIFORNIA

T.Y. LIN / MOFFATT & NICHOL
825 BATTERY STREET
SAN FRANCISCO, CA 94111

To get to the web site, go to: http://www.dot.ca.gov

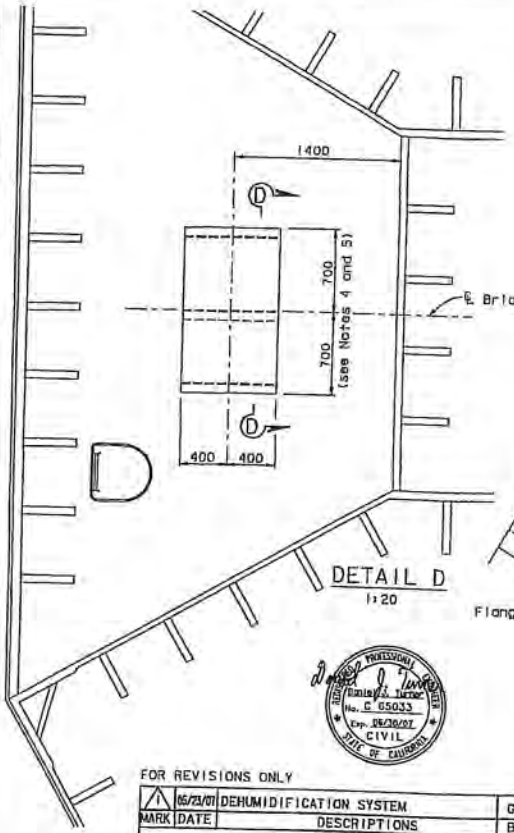

DETAIL D
1:20

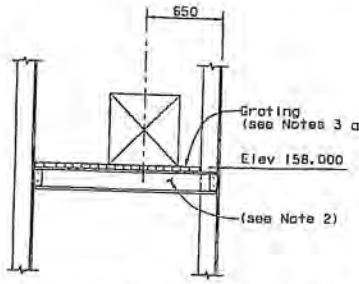

SECTION E-E
1:20

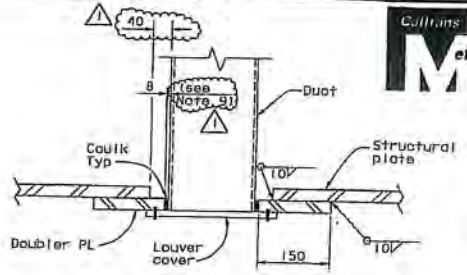

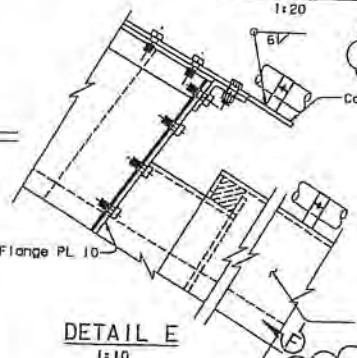

DETAIL E
1:10

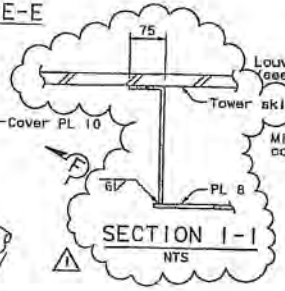

SECTION I-I
NTS

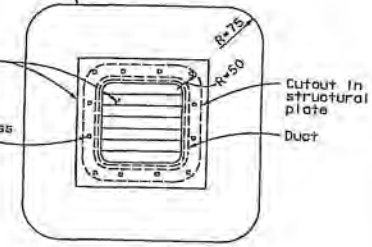

DUCT OPENING DETAIL (see Note 1)
1:5
Rectangular shown, circular similar

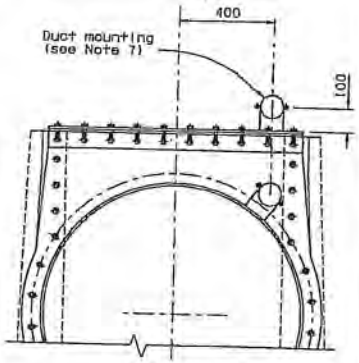

SECTION F-F
1:10

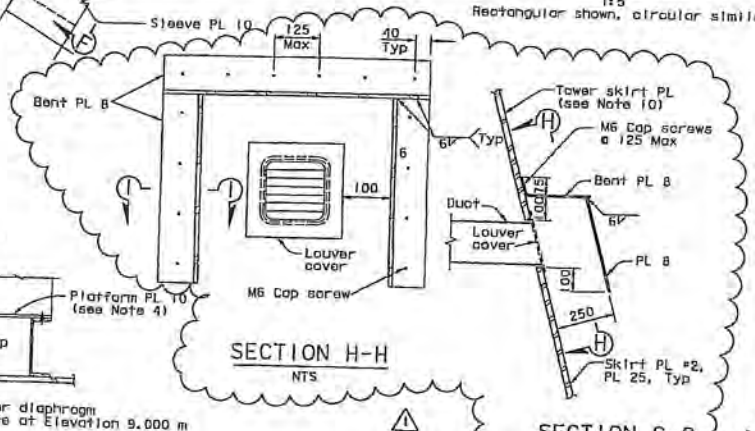

SECTION H-H
NTS

SECTION G-G
NTS

ALL DIMENSIONS ARE IN MILLIMETERS UNLESS OTHERWISE SHOWN

NOTES:

1. For all duct openings doubler plates shall equal the penetrated structural plate.
2. For walkway support beams, see "Tower Access Details No.3" sheet.
3. Galvanized steel grating with fasteners to be provided by contractor. Grating working load shall be 7.0 kN/m (145 psf).
4. Base frames, support beams and fasteners shall be detailed to fit the dehumidifier.
5. For support platform details not shown, see "Dehumidification Support Details No.3" sheet.
6. For louver locations and details, see "East Cable Anchorage Dehumidification" sheets.
7. For similar duct mounting, see Detail B on "East Cable Anchorage Dehumidification Detail No.2" in the mechanical sheets.
8. Cable shroud pipe sleeve and duct connection shall be detailed to permit airtight bolted attachment of the dehumidification ducts. See mechanical sheets.
9. At contractor's option, a gap of up to 25 mm may be used. For 25 mm gap, caulking with backing shall be used.
10. For tower skirt, doubler PL not used.

FOR REVISIONS ONLY

MARK	DATE	DESCRIPTIONS	BY	CH'D	CCO#
1	05/23/07	DEHUMIDIFICATION SYSTEM	GB	DT	32

REVISIONS

CONTRACT CHANGE ORDER NO. 32
SHEET 5 OF 5

REGISTERED PROFESSIONAL ENGINEER Daniel J. Turner No. C 65033 Exp. 06/30/07 CIVIL STATE OF CALIFORNIA

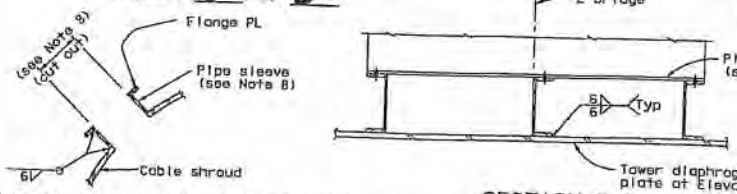

CABLE SHROUD DUCT CONNECTION (see Note 8)
1:5

SECTION D-D
1:10

R. Valizadeh/V. Tooi/Y.L./N.L./F.C.
DESIGN OVERSIGHT
Rza Valizadeh / Vahid Tooi / Y. Liu
STEEL OFF DATE 05/23/07
Rev. Date: 3-15-00

DESIGN	BY G. Baker	CHECKED T. Ho	
DETAILS	BY C. Mauch	CHECKED T. Ho	
QUANTITIES	BY C. Mauch	CHECKED D. Harrison	

PREPARED FOR THE STATE OF CALIFORNIA DEPARTMENT OF TRANSPORTATION

ORIGINAL SCALE IN MILLIMETERS FOR REDUCED PLANS 0 15 20 30 40 50 60 70 80 90 100

R. Manzanarez
PROJECT ENGINEER

BRIDGE NO. 34-0006L/R
KILOMETER POST 13.2/13.9
CU 04
EA 0120F1

DISREGARD PRINTS BEARING EARLIER REVISION DATES

REVISION DATES (PRELIMINARY STAGE ONLY)

SAN FRANCISCO OAKLAND BAY BRIDGE
EAST SPAN SEISMIC SAFETY PROJECT
SELF-ANCHORED SUSPENSION BRIDGE
(SUPERSTRUCTURE & TOWER)

DEHUMIDIFICATION SUPPORT DETAILS NO.5

SHEET 544R1 OF

FILE => J:\bb\04-012001\sas\contract plans and cos\cco\in progress\cco*32\akdsh05.dgn

USERNAME => cmfrew DATE PLOTTED => 21 MAY 2007 TIME PLOTTED => 11:19:31

100 % PSAE

STATE OF CALIFORNIA - DEPARTMENT OF TRANSPORTATION

CONTRACT CHANGE ORDER MEMORANDUM

DATE: 4/16/2009 Page 1 of 1

TO: Pete Siegenthaler, Prin. TE / Gary Pursell, P.E., Sup T.E.	FILE: E.A. 04 - 0120F4
FROM: Gary Pursell, P.E., Sup.T.E.	CO-RTE-PM SF-80-13.2/13.9
	FED. NO.
CCO#: 32 SUPPLEMENT#: 0 Category Code: CXPK	CONTINGENCY BALANCE (incl. this change) $101,946,506.40
COST: $13,901.00 INCREASE ☑ DECREASE ☐	HEADQUARTERS APPROVAL REQUIRED? ☑ YES ☐ NO
SUPPLEMENTAL FUNDS PROVIDED: $0.00	IS THIS REQUEST IN ACCORDANCE WITH ENVIRONMENTAL DOCUMENTS? ☑ YES ☐ NO
CCO DESCRIPTION: Mechanical (Dehumidifier Mods)	**PROJECT DESCRIPTION:** CONSTRUCT SELF-ANCHORED SUSPENSION BRIDGE

Original Contract Time:	Time Adj. This Change:	Previously Approved CCO Time Adjustments:	Percentage Time Adjusted: (including this change)	Total # of Unreconciled Deferred Time CCO(s): (including this change)
2490 Day(s)	0 Day(s)	30 Day(s)	1 %	0

THIS CHANGE ORDER PROVIDES FOR:

Incorporating Dehumidifier System revisions, as identified in the following responses to referenced RFI' s:

- RFI 122R0 & 122R1 – A hood has been added to the louver cover to maximize corrosion protection of the cover while preventing water from entering the duct via the louver blades.
- RFI 124R0 – Adds a note to the plans directing the Contractor to orient the exhaust of the dehumidifier unit away from service personnel.
- RFI 125R0 – Identifies the humidistat location, clarifies that the process fan is to run continuously and that the dampers shall be manual control.

Revisions have been made to Contract Plan Sheets 61R1, 960R1, 961R1 and Special Provisions Section 10-4.06, to reflect these changes.

Payment for this additional work will be at Adjustment of Compensation at Lump Sum Price for the amount of $13,901.00, which can be financed from the contingency fund. A detailed force account cost analysis is on file with the project records.

No time adjustment is warranted, as this change order does not affect the controlling operation.

Design and Maintenance concurrence has been acquired for this change order.

The Resident Engineer received an Issue and Approve (I&A) from HQ Construction for this change order on 3/13/2009.

CONCURRED BY:			
Construction Engineer:	Res. Eng., Gary Pursell, Sup. TE	Date	8/17/07
Bridge Engineer:	Struct Rep, Rick Morrow, Sup TE	Date	8/17/07
Project Engineer:	CT Oversight, Reza Valizadeh, P.E	Date	8/20/07
Project Manager:	Proj Manager, Ken Terpstra	Date	8/31/07
FHWA Rep.:		Date	
Environmental:		Date	
Other (specify):	Design of Record, Marwan Nader,	Date	8/10/07
Other (specify):	Struct Maint, Bill Zanetich, P.E.	Date	8/24/07
District Prior Approval By:		Date	
HQ (Issue Approve) By:	HQ Bob Molera	Date	3/13/09
Resident Engineer's Signature: Gary Pursell		Date	4/16/09

ESTIMATE OF COST

	THIS REQUEST	TOTAL TO DATE
ITEMS	$0.00	$0.00
FORCE ACCOUNT	$0.00	$0.00
AGREED PRICE	$0.00	$0.00
ADJUSTMENT	$13,901.00	$13,901.00
TOTAL	$13,901.00	$13,901.00

FEDERAL PARTICIPATION

☐ PARTICIPATING ☐ PARTICIPATING IN PART ☑ NONE
☐ NON-PARTICIPATING (MAINTENANCE) ☐ NON-PARTICIPATING

FEDERAL SEGREGATION (if more than one Funding Source or P.I.P. type)
☐ CCO FUNDED PER CONTRACT ☐ CCO FUNDED AS FOLLOWS

FEDERAL FUNDING SOURCE	PERCENT

ADA Notice: For individuals with sensory disabilities, this document is available in alternate formats. For information call: (916) 654-6410 or TDD (916) 654-3880 or write Records and Forms Management, 1120 N Street, MS-89, Sacramento, CA 95814.

STATE OF CALIFORNIA - DEPARTMENT OF TRANSPORTATION

CONTRACT CHANGE ORDER

Change Requested by: Engineer

CCO: 33 Suppl. No. 0 Contract No. 04 – 0120F4 Road SF-80-13.2/13.9 **FED. AID LOC.:**

To: **AMERICAN BRIDGE/FLUOR ENTERPRISES INC A JOINT VENTURE**

You are directed to make the following changes from the plans and specifications or do the following described work not included in the plans and specifications for this contract. ***NOTE: This change order is not effective until approved by the Engineer.***

Description of work to be done, estimate of quantities and prices to be paid. (Segregate between additional work at contract price, agreed price and force account.) Unless otherwise stated, rates for rental of equipment cover only such time as equipment is actually used and no allowance will be made for idle time. This last percentage shown is the net accumulated increase or decrease from the original quantity in the Engineer's Estimate.

Adjustment of Compensation at Lump Sum Price:

ITEM 1.

Modify the brackets for attaching the bikepath to the Eastbound Orthotropic Box Girder (OBG) as shown on sheets two (2) through eight (8) of this change order.

The following revised contract plan sheets detail all changes: Plan Sheet Nos. 825R1, 833R1, 834R1, 835R1, 836R1, 837R1 and 838R1 (of 1204).

This change order resolves Contractor Request For Information (RFI) Nos. 164R0, 368R1, 372R0 and 741R0 with respect to changes listed above.

For this work, the Contractor will be paid the sum of $150,000.00. This sum constitutes full compensation, including all markups, for this change.

Adjustment of Compensation at Lump Sum Price.....$150,000.00

ITEM 2.

The items identified above in this change order have been paid as part of CCO 108 resolution. Therefore, the amount due under this change order will be adjusted by the amount paid under CCO 108 to prevent a double payment. Total amount paid under CCO 108, and to be credited to this change, is $150,000.00.

Adjustment of Compensation at Lump Sum Price..... <$150,000.00>

CHANGE ORDER COST AND TIME SUMMARY

(ITEM 1) Adjustment of Compensation for work pursuant to this change order	$150,000.00
(ITEM 2) Amount paid under CCO 108 for this change order	<$150,000.00>
Total net pay for this change order	$0.00

Contract time is addressed in CCO 108 for all work identified in this change order. Therefore, contract time will not be adjusted in this change order.

Estimated Cost: Increase ☐ Decrease ☐ $0.00

By reason of this order the time of completion will be adjusted as follows: 0 days

Submitted by

Signature **Resident Engineer** Brian Boal for Gary Pursell, Sup.T.E. **Date** 2/2/2010

Approval Recommended by

Signature **Supervising Transportation Engineer** Gary Pursell, Sup.T.E. **Date** 2/2/10

Engineer Approval by

Signature **Supervising Transportation Engineer** Gary Pursell, Sup.T.E. **Date** 2/23/10

We the undersigned contractor, have given careful consideration to the change proposed and agree, if this proposal is approved, that we will provide all equipment, furnish the materials, except as otherwise be noted above, and perform all services necessary for the work above specified, and will accept as full payment therefor the prices shown above.

NOTE: If you, the contractor, do not sign acceptance of this order, your attention is directed to the requirements of the specifications as to proceeding with the ordered work and filing a written protest within the time therein specified.

Contractor Acceptance by

Signature (Print name and title) Michael D. Flowers Project Director **Date** 2-22-10

DIST.	COUNTY	ROUTE	KILOMETER POST TOTAL PROJECT	SHEET NO.	TOTAL SHEETS
04	SF	80	13.2/13.9	825R	1204

REGISTERED ENGINEER - CIVIL

12-6-04

PLANS APPROVAL DATE

The State of California or its officers or agents shall not be responsible for the accuracy or completeness of electronic copies of this plan sheet.

REGISTERED PROFESSIONAL ENGINEER Tien Hung Ho No. C 43990 Exp. 6/30/09 CIVIL STATE OF CALIFORNIA

T.Y. LIN / MOFFATT & NICHOL
825 BATTERY STREET
SAN FRANCISCO, CA 94111

Caltrans now has a web site! To get to the web site, go to: http://www.dot.ca.gov

Caltrans Metric

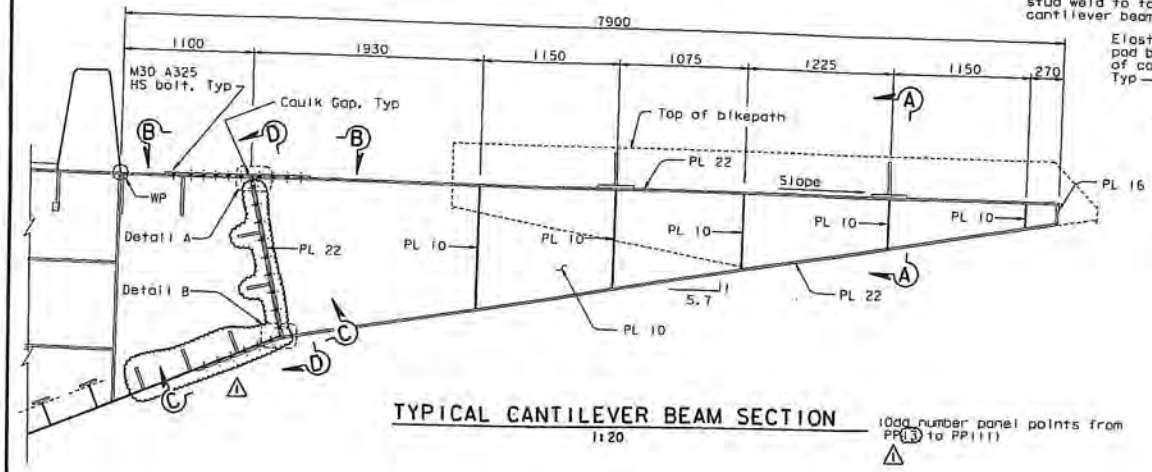

TYPICAL CANTILEVER BEAM SECTION
1:20

(Odd number panel points from PP(13) to PP(11))

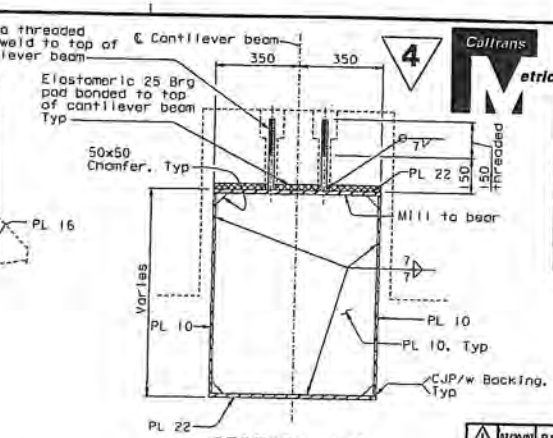

SECTION A-A
1:10

MARK	DATE	DESCRIPTIONS	BY	CH'D	CCO#
1	01/20/01	BIKEPATH BRACKETS	GB	TH	33
		REVISIONS			

CONTRACT CHANGE ORDER NO. 33
SHEET 2 OF 8

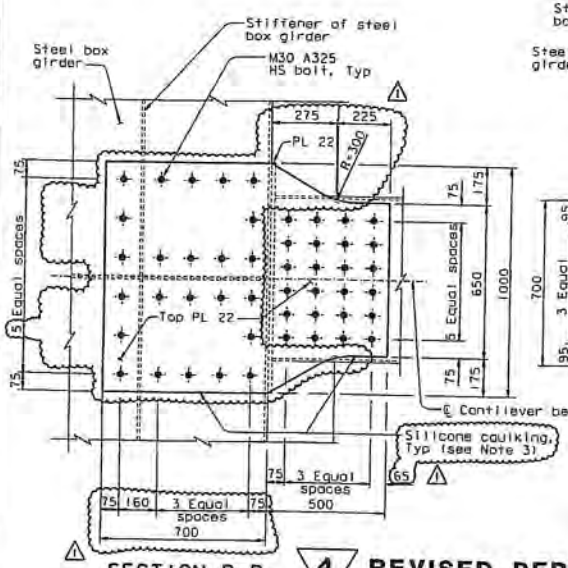

SECTION B-B
1:10

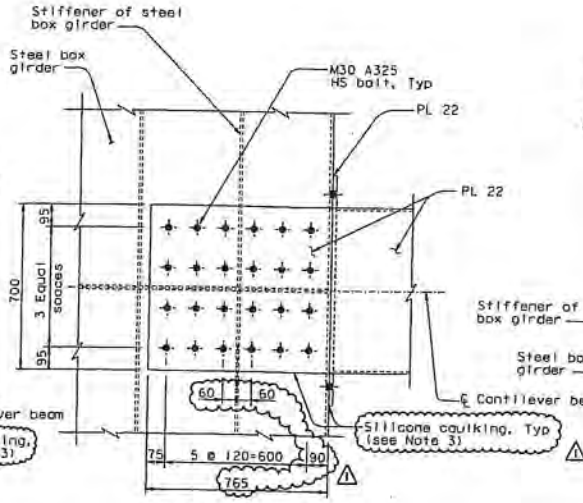

SECTION C-C
1:10

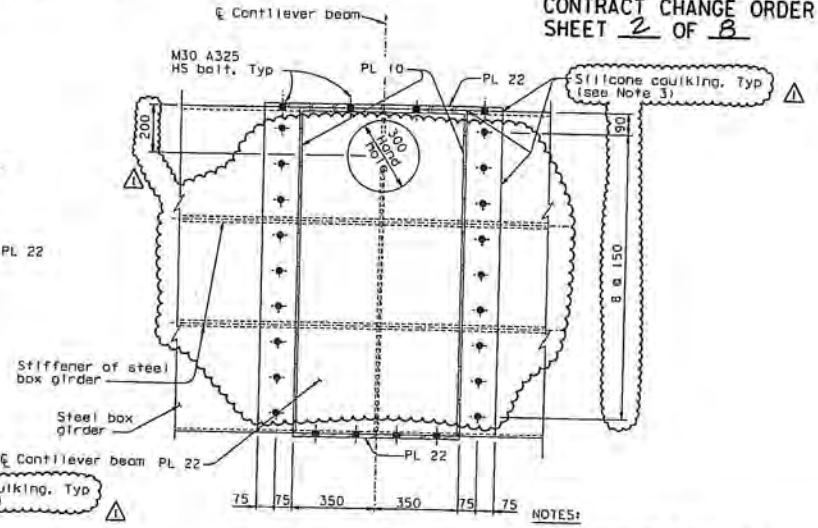

SECTION D-D
1:10

NOTES:

1. For location of typical cantilever beam, see "Bikepath Layout" sheets.
2. For Details A and B, see "Suspender Bracket Details No.2" sheet.
3. Silicone caulking shall be provided along all edges of bolted connection between bikepath cantilever beam and box girder.

4 REVISED PER ADDENDUM NO. 4 DATED DECEMBER 9, 2005

ALL DIMENSIONS ARE IN MILLIMETERS UNLESS OTHERWISE SHOWN

R. Vaitzadeh/V. Tran/Y.L./N.L./F.C.
DESIGN OVERSIGHT
SIGN OFF DATE 01/20/01

DESIGN	BY T. Ho	CHECKED T. McMeans	
DETAILS	BY R. Xu	CHECKED P. Ritchie	
QUANTITIES	BY C. Bernardo	CHECKED S. Shi	

PREPARED FOR THE STATE OF CALIFORNIA DEPARTMENT OF TRANSPORTATION

R. Manzanarez
PROJECT ENGINEER

BRIDGE NO. 34-0006L/R
KILOMETER POST 13.2/13.9

CU 04
EA 0120F1

DISREGARD PRINTS BEARING EARLIER REVISION DATES

SAN FRANCISCO OAKLAND BAY BRIDGE
EAST SPAN SEISMIC SAFETY PROJECT
SELF-ANCHORED SUSPENSION BRIDGE
(SUPERSTRUCTURE & TOWER)

BIKEPATH DETAILS NO. 1

SHEET 408R OF

ORIGINAL SCALE IN MILLIMETERS FOR REDUCED PLANS

FILE => I:\DO\04-012001\sos\contract plans and pos\cco\in progress\cco33\ccp-d01.dgn

USERNAME => s-rgonzales DATE PLOTTED => 25 JUL 2007 TIME PLOTTED => 12:06:26

100 % psas

DIST.	COUNTY	ROUTE	KILOMETER POST TOTAL PROJECT	SHEET NO.	TOTAL SHEETS
04	SF	80	13.2/13.9	833R1	1204

Collins Metric

REGISTERED ENGINEER - CIVIL

12-6-04

PLANS APPROVAL DATE

The State of California or its officers or agents shall not be responsible for the accuracy or completeness of electronic copies of this plan sheet.

REGISTERED PROFESSIONAL ENGINEER Tien Hung Ho No. C 43990 Exp. 6/30/09 CIVIL STATE OF CALIFORNIA

T.Y. LIN / MOFFATT & NICHOL
825 BATTERY STREET
SAN FRANCISCO, CA 94111

To get to the web site, go to: http://www.dot.ca.gov

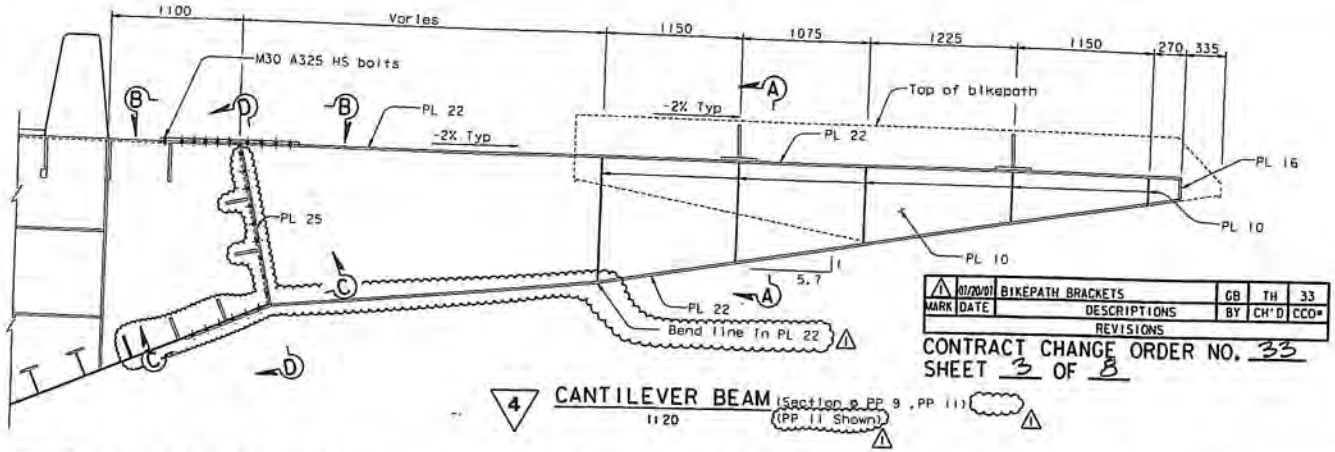

MARK	DATE	DESCRIPTIONS	BY	CH'D	CCO#
1	01/20/01	BIKEPATH BRACKETS	GB	TH	33

REVISIONS

CONTRACT CHANGE ORDER NO. 33
SHEET 3 OF 8

4 CANTILEVER BEAM (Section @ PP 9, PP 11) (PP 11 Shown)
1:20

4 REVISED PER ADDENDUM NO. 4 DATED DECEMBER 9, 2005

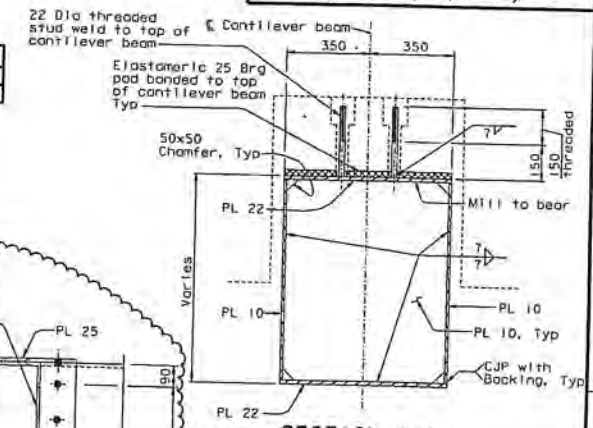

4 SECTION A-A
1:10

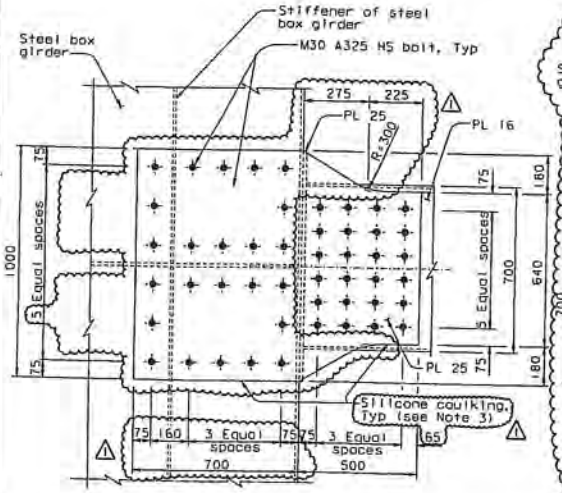

4 SECTION B-B
1:10

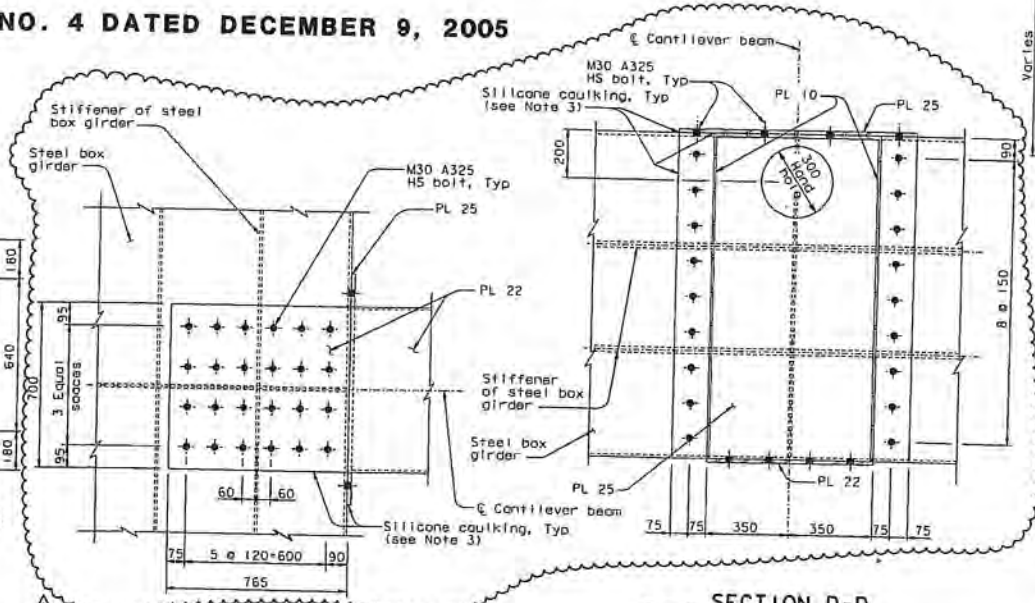

SECTION C-C
1:10

4 SECTION D-D
1:10

NOTES:

1. Bikepath deck similar to typical bikepath deck. For details, see "Bikepath Details No.3" sheet.
2. For details not shown, see "Bikepath Details No.1" sheet.
3. Silicone caulking shall be provided along edges of bolted connection between bikepath cantilever beam and box girder.

100 % PS&E

ALL DIMENSIONS ARE IN MILLIMETERS UNLESS OTHERWISE SHOWN

R. Valizadeh/V. Toon/Y.L./W.L./F.C.
DESIGN OVERSIGHT
Roger Valizadeh / Vera Toon / Y. Liu
STGN DFT DATE 07/20/07
Rev. Date: 5-10-99

DESIGN	BY T. Ho	CHECKED T. McMeans	
DETAILS	BY R. Ku	CHECKED P. Ritchie	
QUANTITIES	BY C. Bernardo	CHECKED S. Shi	

PREPARED FOR THE STATE OF CALIFORNIA DEPARTMENT OF TRANSPORTATION

R. Manzanarez
PROJECT ENGINEER

BRIDGE NO. 34-0006L/R
KILOMETER POST 13.2/13.9

CU 04
EA 0120F1

ORIGINAL SCALE IN MILLIMETERS FOR REDUCED PLANS 0 10 20 30 40 50 60 70 80 90 100

DISREGARD PRINTS BEARING EARLIER REVISION DATES

REVISION DATES (PRELIMINARY STAGE ONLY)

SAN FRANCISCO OAKLAND BAY BRIDGE
EAST SPAN SEISMIC SAFETY PROJECT
SELF-ANCHORED SUSPENSION BRIDGE
(SUPERSTRUCTURE & TOWER)

BIKEPATH DETAILS NO. 9

SHEET 416R1 OF

FILE => L:\SB\04-012001\SAS\Contract Plans and CCO\CCO\In Progress\CCO#33\agbwd09.dgn

USERNAME => vignatovsky DATE PLOTTED => 25 JUL 2007 TIME PLOTTED => 12:00:54

4 REVISED PER ADDENDUM NO. 4 DATED DECEMBER 9, 2005

DIST.	COUNTY	ROUTE	KILOMETER POST TOTAL PROJECT	SHEET NO.	TOTAL SHEETS
04	SF	80	13.2/13.9	834R1	1204

REGISTERED ENGINEER - CIVIL
12-6-04
PLANS APPROVAL DATE
Tien Hung Ho, No. C 43990, Exp. 6/30/09, CIVIL, STATE OF CALIFORNIA
The State of California or its officers or agents shall not be responsible for the accuracy or completeness of electronic copies of this plan sheet.
T.Y. LIN / MOFFATT & NICHOL
825 BATTERY STREET
SAN FRANCISCO, CA 94111
To get to this web site, go to: http://www.dot.ca.gov

MARK	DATE	DESCRIPTIONS	BY	CH'D	CCO#
1	01/10/06	BIKEPATH BRACKETS	GB	TH	33

REVISIONS

CONTRACT CHANGE ORDER NO. 33
SHEET 4 OF 8

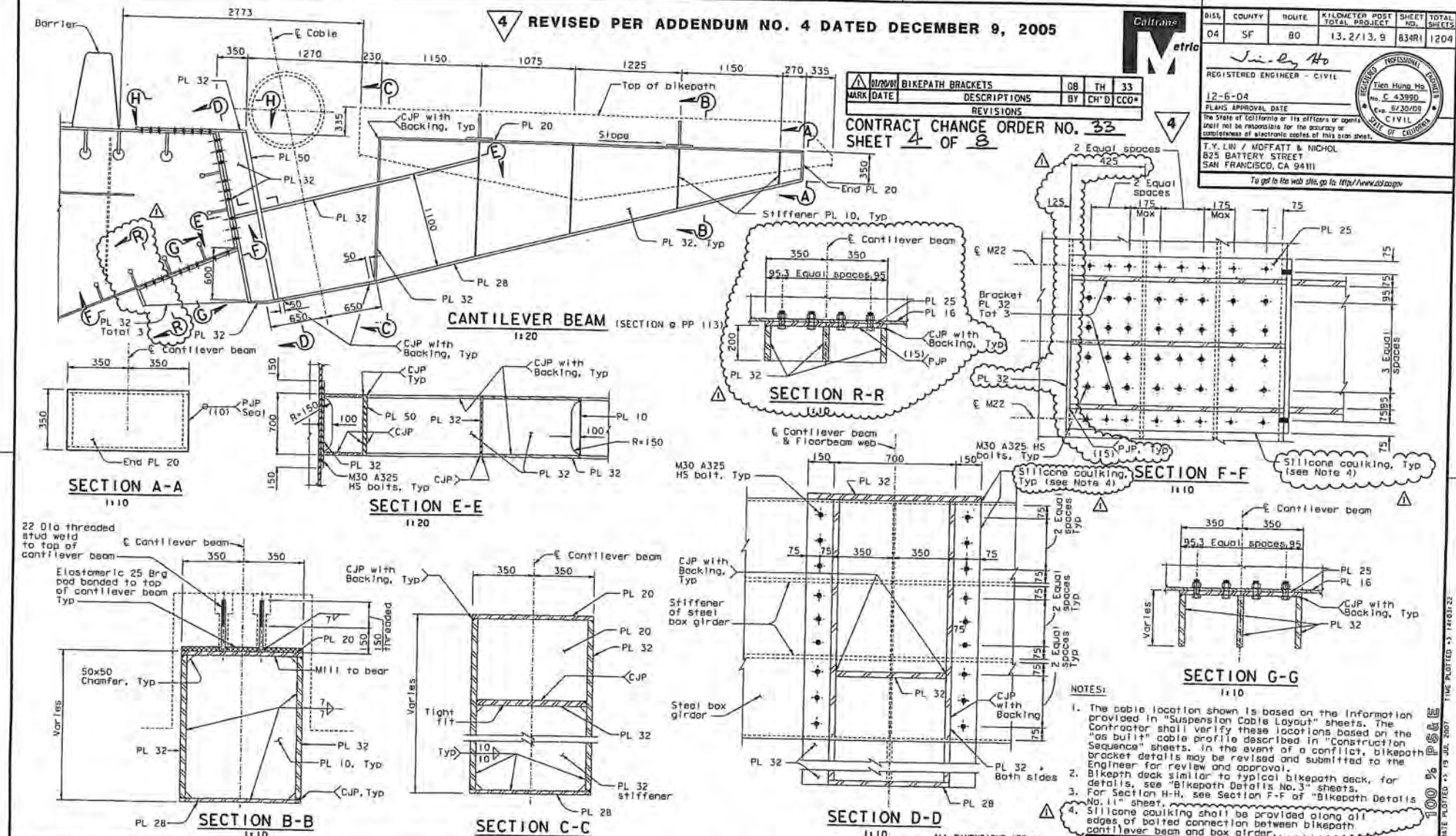

NOTES:

1. The cable location shown is based on the information provided in "Suspension Cable Layout" sheets. The Contractor shall verify these locations based on the "as built" cable profile described in "Construction Sequence" sheets. In the event of a conflict, bikepath bracket details may be revised and submitted to the Engineer for review and approval.
2. Bikepath deck similar to typical bikepath deck, for details, see "Bikepath Details No. 3" sheets.
3. For Section H-H, see Section F-F of "Bikepath Details No. 11" sheet.
4. Silicone caulking shall be provided along all edges of bolted connection between bikepath cantilever beam and box girder.

ALL DIMENSIONS ARE IN MILLIMETERS UNLESS OTHERWISE SHOWN

R. Vallzadeh/V. Toan/Y.L./R.L./F.C.
DESIGN OVERSIGHT
Y. Lin
SIGN OFF DATE 07/20/07
Rev. Date: 5-18-06

DESIGN	BY T. Ho	CHECKED T. McMeans	
DETAILS	BY R. Xu	CHECKED P. Ritchie	
QUANTITIES	BY C. Bernardo	CHECKED S. Shi	

PREPARED FOR THE STATE OF CALIFORNIA DEPARTMENT OF TRANSPORTATION

R. Manzanarez
PROJECT ENGINEER

BRIDGE NO. 34-0006L/R
KILOMETER POST 13.2/13.9

ORIGINAL SCALE IN MILLIMETERS FOR REDUCED PLANS 0 10 20 30 40 50 60 70 80 90 100

CU 04
EA 0120F1

DISREGARD PRINTS BEARING EARLIER REVISION DATES

FILE => I:\bb\04-012001\bas\contract plans and cco\cco\in progress\cco*33\bpdwd18.dgn

SAN FRANCISCO OAKLAND BAY BRIDGE
EAST SPAN SEISMIC SAFETY PROJECT
SELF-ANCHORED SUSPENSION BRIDGE
(SUPERSTRUCTURE & TOWER)

BIKEPATH DETAILS NO. 10

SHEET 417R1 OF

100 % PLANS

USERNAME => D1DOR DATE PLOTTED => 19 JUL 2007 TIME PLOTTED => 14:03:22

DIST.	COUNTY	ROUTE	KILOMETER POST TOTAL PROJECT	SHEET NO.	TOTAL SHEETS
04	SF	80	13.2/13.9	835R1	1204

REGISTERED ENGINEER - CIVIL

12-6-04
PLANS APPROVAL DATE

REGISTERED PROFESSIONAL ENGINEER Tien Hung Ho No. C 43980 Exp. 6/30/09 CIVIL STATE OF CALIFORNIA

The State of California or its officers or agents shall not be responsible for the accuracy or completeness of electronic copies of this plan sheet.

T.Y. LIN / MOFFATT & NICHOL
825 BATTERY STREET
SAN FRANCISCO, CA 94111

To get to the web site, go to: http://www.dot.ca.gov

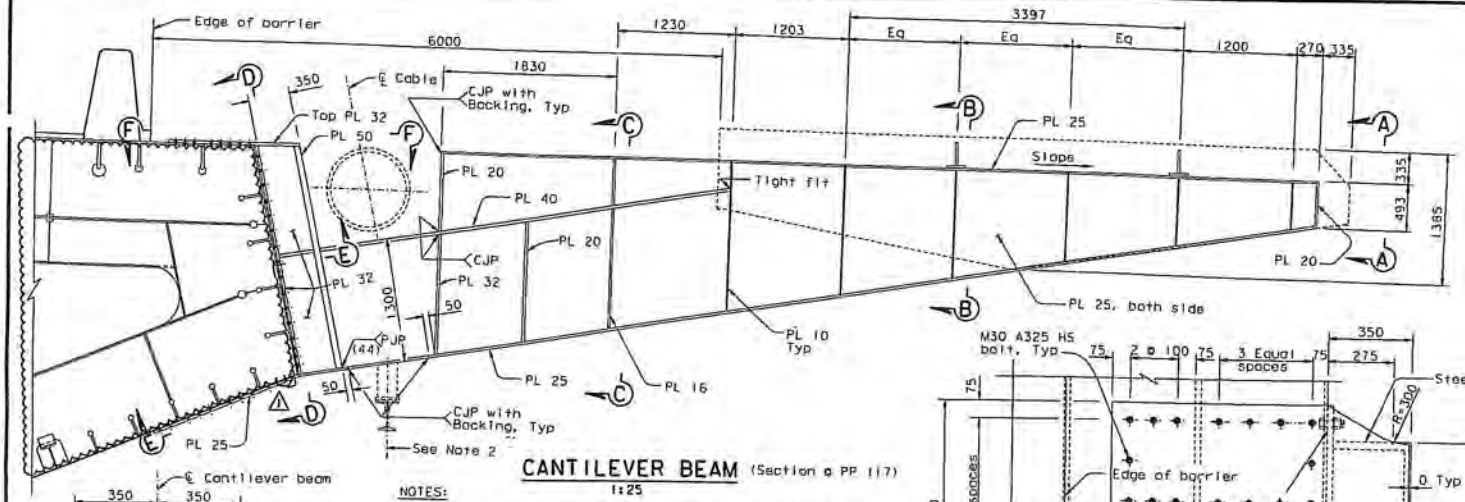

CANTILEVER BEAM (Section a PP 117)
1:25

NOTES:

1. The cable location shown is based on the information provided in "Suspension Cable Layout" sheets. The Contractor shall verify these locations based on the "as built" cable profile described in "Construction Sequence" sheets. In the event of a conflict, bikepath bracket details may be revised and submitted to the Engineer for review and approval.
2. For location and details of traveler roll support, see "Traveler Roll Details No. 13" sheet.
3. Silicone caulking shall be provided along all edges of bolted connection between bikepath cantilever beam and box girder.

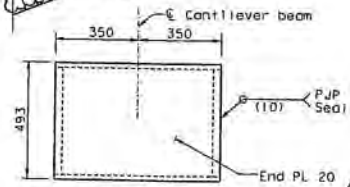

VIEW A-A
1:10

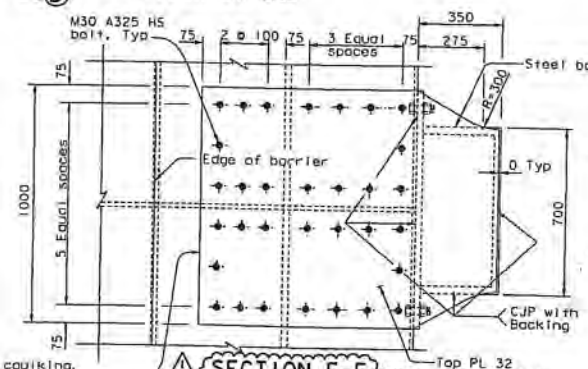

SECTION F-F
1:10

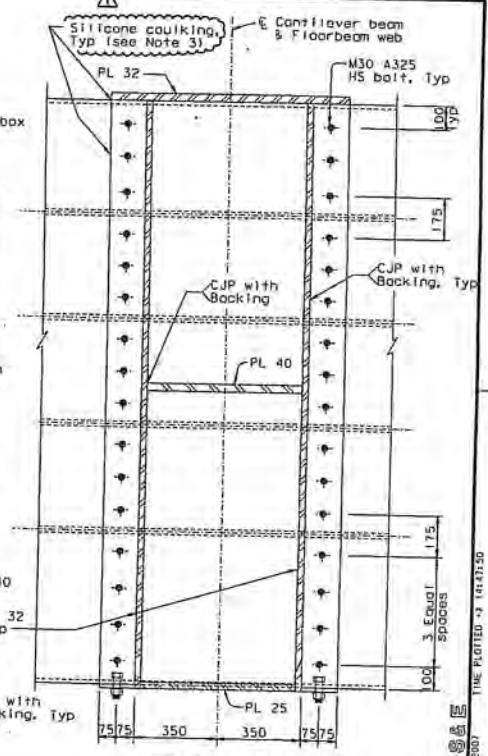

SECTION D-D
1:10

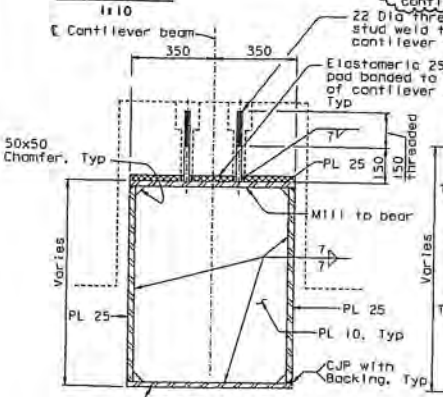

SECTION B-B
1:10

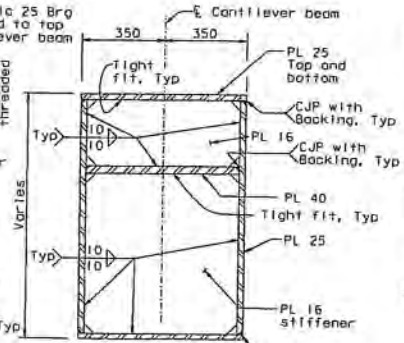

SECTION C-C
NTS

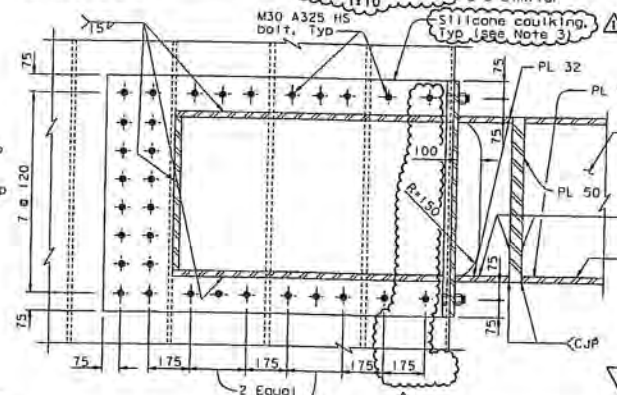

SECTION E-E
1:10

4 REVISED PER ADDENDUM NO. 4 DATED DECEMBER 9, 2005

ALL DIMENSIONS ARE IN MILLIMETERS UNLESS OTHERWISE SHOWN

MARK	DATE	DESCRIPTIONS	BY	CH'D	CCO#
1	01/20/05	BIKEPATH BRACKETS	GB	TH	33

REVISIONS

CONTRACT CHANGE ORDER NO. 33
SHEET 5 OF 8

R. Vallizadeh/V. Toon/Y.L./N.L./F.C.
DESIGN OVERSIGHT
SIGN OFF DATE 07/20/07
Rev. Date: 3-13-05

DESIGN BY T. Ha — CHECKED T. McKeons
DETAILS BY R. Xu — CHECKED P. Aitchle
QUANTITIES BY C. Bernardo — CHECKED S. Shi

PREPARED FOR THE STATE OF CALIFORNIA DEPARTMENT OF TRANSPORTATION

R. Manzanarez
PROJECT ENGINEER

ORIGINAL SCALE IN MILLIMETERS FOR REDUCED PLANS 0 10 20 30 40 50 60 70 80 90 100

CU 04
EA 0120F1

BRIDGE NO. 34-0006L/R
KILOMETER POST 13.2/13.9

SAN FRANCISCO OAKLAND BAY BRIDGE
EAST SPAN SEISMIC SAFETY PROJECT
SELF-ANCHORED SUSPENSION BRIDGE
(SUPERSTRUCTURE & TOWER)

BIKEPATH DETAILS NO. 11

DISREGARD PRINTS BEARING EARLIER REVISION DATES

REVISION DATES (PRELIMINARY STAGE ONLY) SENSITIVE | MONTH | STATUS | STATUS | 11/15/05

SHEET 418R1 OF

FILE -> H:\bb\04-0120F1\sas\contract plans and ccs\ccs\in progress\cco#33\ccgwd11.dgn

USERNAME -> pitch

DATE PLOTTED -> 19 JUL 2007 TIME PLOTTED -> 14:43:50

100 % PAGE

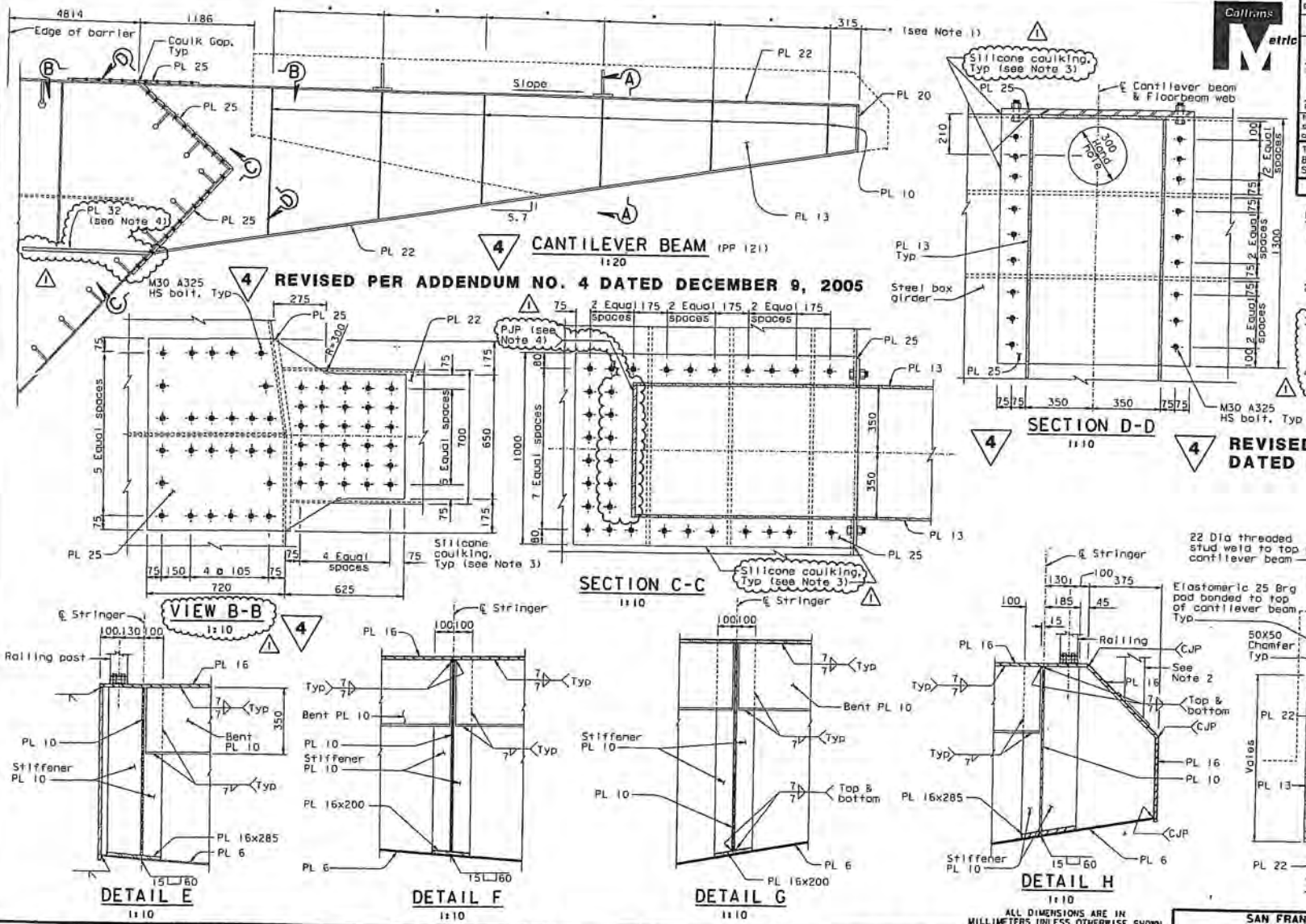

DIST.	COUNTY	ROUTE	KILOMETER POST TOTAL PROJECT	SHEET NO.	TOTAL SHEETS
04	SF	80	13.2/13.9	836R1	1204

REGISTERED ENGINEER - CIVIL

12-6-04

PLANS APPROVAL DATE

The State of California or its officers or agents shall not be responsible for the accuracy or completeness of electronic copies of this plan sheet.

T.Y. LIN / MOFFATT & NICHOL
825 BATTERY STREET
SAN FRANCISCO, CA 94111

To get to the web site, go to: http://www.dot.ca.gov

NOTES:

1. Stiffener plate spacing to match bikepath stringer spacing, see "Bikepath Framing Details No. 5" sheet.
2. For call box support locations and details, see "Road Plans".
3. Silicone caulking shall be provided along all edges of bolted connection between bikepath cantilever beam and box girder.
4. For bikepath bracket stiffener, see Note 6 on "Floorbeam At East Transition No. 4" sheet.

ALL DIMENSIONS ARE IN MILLIMETERS UNLESS OTHERWISE SHOWN

MARK	DATE	DESCRIPTIONS	BY	CH'D	CCO#
1	01/20/07	BIKEPATH BRACKETS	GB	TH	33

REVISIONS

CONTRACT CHANGE ORDER NO. 33
SHEET 6 OF 8

R. Valizadeh/V. Tsan/Y.L./W.L./F.C.
DESIGN OVERSIGHT
SIGN OFF DATE 07/20/07
Rev. Date: 5-15-98

DESIGN BY T. Ho — CHECKED T. McMeans
DETAILS BY R. Xu — CHECKED P. Ritchie
QUANTITIES BY C. Bernardo — CHECKED S. Shi

PREPARED FOR THE STATE OF CALIFORNIA DEPARTMENT OF TRANSPORTATION

R. Manzanarez
PROJECT ENGINEER

BRIDGE NO. 34-0006L/R
KILOMETER POST 13.2/13.9

CU 04
EA 0120F1

SAN FRANCISCO OAKLAND BAY BRIDGE
EAST SPAN SEISMIC SAFETY PROJECT
SELF-ANCHORED SUSPENSION BRIDGE
(SUPERSTRUCTURE & TOWER)

BIKEPATH DETAILS NO. 12

SHEET 419R1

FILE => I:\bb\04-012001\sas\contract plans and cco\cco\in progress\cco#33\ogpw012.dgn

100 % PS&E
DATE PLOTTED => 19 JUL 2007 TIME PLOTTED => 14:07:06

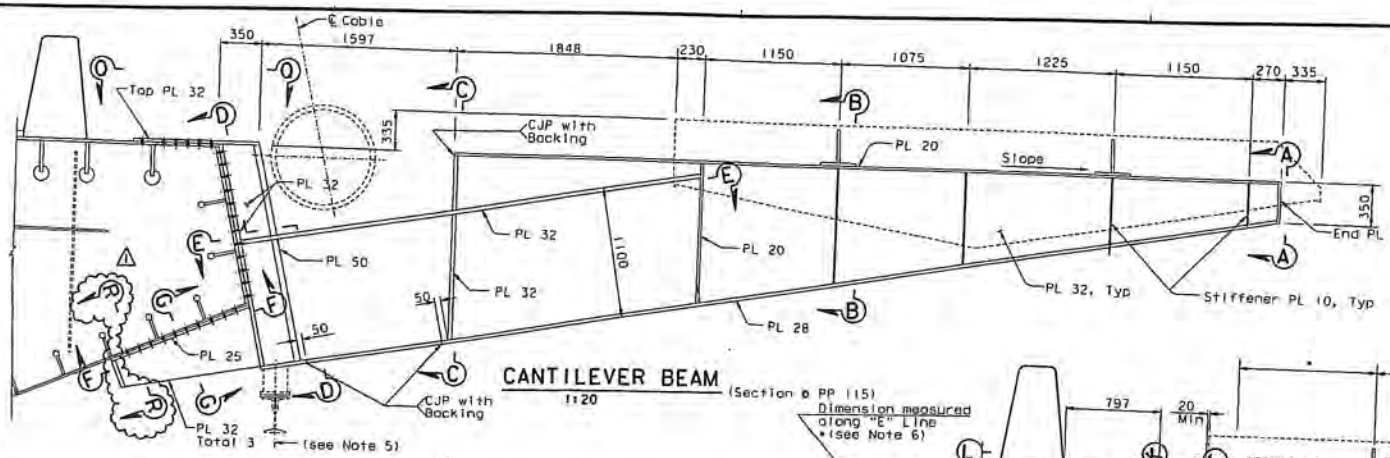

CANTILEVER BEAM (Section 6 PP 115)
1:20

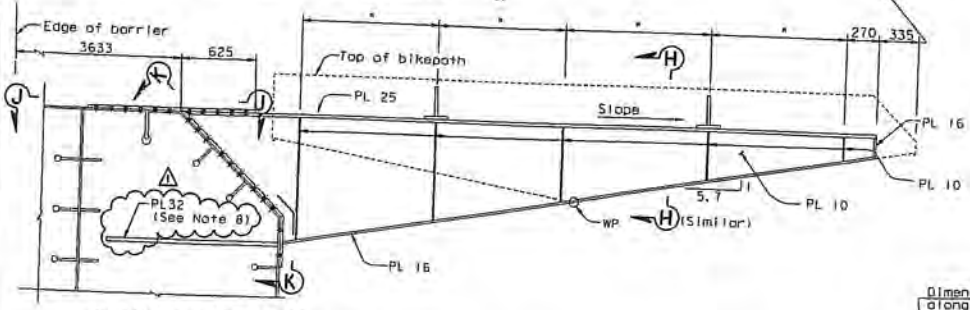

CANTILEVER BEAM (PP123)
1:20

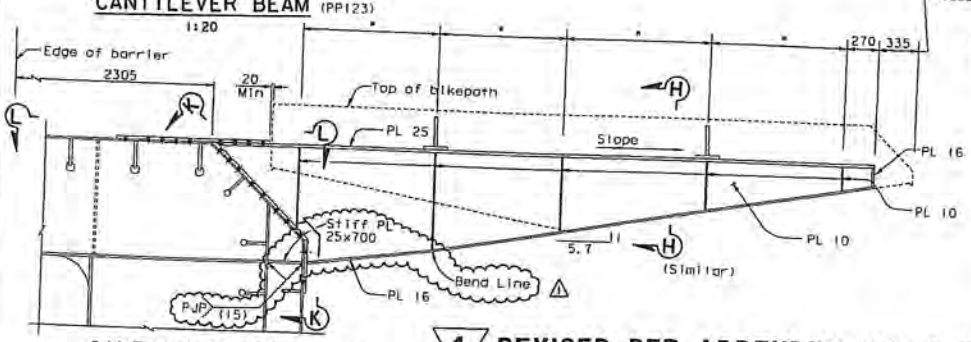

CANTILEVER BEAM (PP125)
1:20

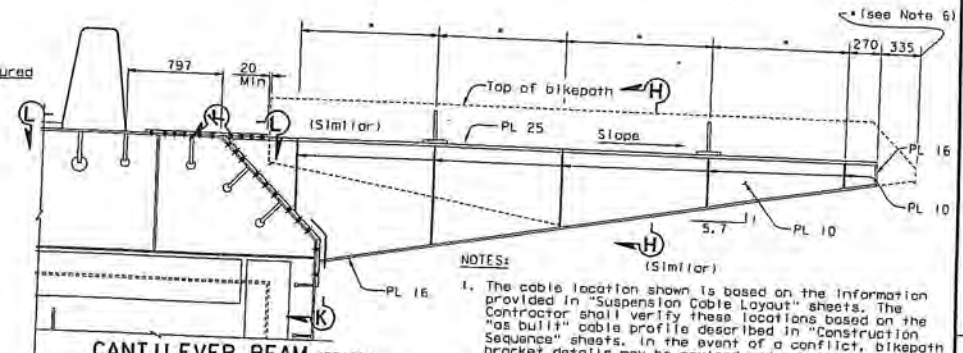

CANTILEVER BEAM (PP127)
1:20
Dimension measured along "E" Line

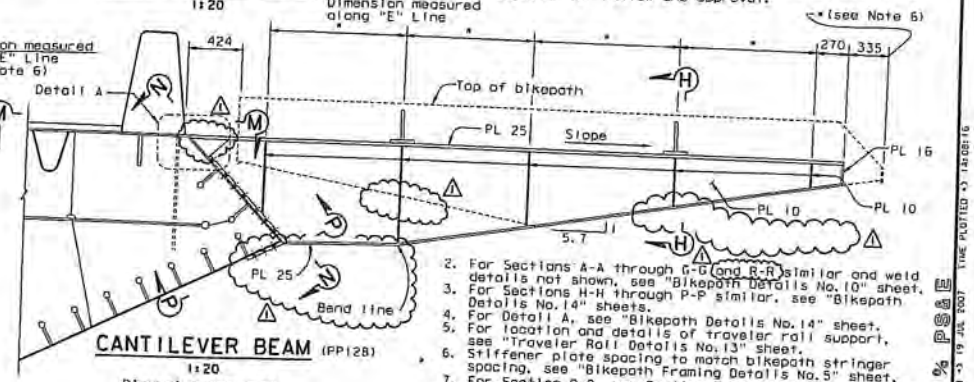

CANTILEVER BEAM (PP128)
1:20
Dimension measured along "E" Line

NOTES:

1. The cable location shown is based on the information provided in "Suspension Cable Layout" sheets. The Contractor shall verify these locations based on the "as built" cable profile described in "Construction Sequence" sheets. In the event of a conflict, bikepath bracket details may be revised and submitted to the Engineer for review and approval.
2. For Sections A-A through G-G and R-R similar and weld details not shown, see "Bikepath Details No. 10" sheet.
3. For Sections H-H through P-P similar, see "Bikepath Details No. 14" sheets.
4. For Detail A, see "Bikepath Details No. 14" sheet.
5. For location and details of traveler rail support, see "Traveler Rail Details No. 13" sheet.
6. Stiffener plate spacing to match bikepath stringer spacing, see "Bikepath Framing Details No. 5" sheet.
7. For Section O-O, see Section F-F of "Bikepath Details No. 11" sheet.
8. For bikepath bracket stiffener, see Note 6 on "Floorbeam At East Transition No. 5" sheet.

4 REVISED PER ADDENDUM NO. 4 DATED DECEMBER 9, 2005

ALL DIMENSIONS ARE IN MILLIMETERS UNLESS OTHERWISE SHOWN

DIST.	COUNTY	ROUTE	KILOMETER POST TOTAL PROJECT	SHEET NO.	TOTAL SHEETS
04	SF	80	13.2/13.9	837R1	1204

REGISTERED ENGINEER - CIVIL
12-6-04
PLANS APPROVAL DATE
The State of California or its officers or agents shall not be responsible for the accuracy or completeness of electronic copies of this plan sheet.
REGISTERED PROFESSIONAL ENGINEER Tien Hung Ho No. C 43990 Exp. 06/30/09 CIVIL STATE OF CALIFORNIA
T.Y. LIN / MOFFATT & NICHOL
825 BATTERY STREET
SAN FRANCISCO, CA 94111
To get to the web site, go to: http://www.dot.ca.gov

R. Valizadeh/V. Toan/Y.L./W.L./F.C.
DESIGN OVERSIGHT
STOW OFF DATE 07/20/07
Rev. Date: 5-18-98

MARK	DATE	DESCRIPTIONS	BY	CH'D	CCO#
1	07/20/07	BIKEPATH BRACKETS	GB	TH	33

REVISIONS

CONTRACT CHANGE ORDER NO. 33
SHEET 7 OF 8

DESIGN BY T. Ho — CHECKED T. McMeans
DETAILS BY R. Xu — CHECKED P. Ritchie
QUANTITIES BY C. Bernardo — CHECKED S. Shi

ORIGINAL SCALE IN MILLIMETERS FOR REDUCED PLANS 0 10 20 30 40 50 60 70 80 90 100

PREPARED FOR THE STATE OF CALIFORNIA DEPARTMENT OF TRANSPORTATION

R. Manzanarez
PROJECT ENGINEER

BRIDGE NO. 34-0006L/R
KILOMETER POST 13.2/13.9

CU 04
EA 0120F1

DISREGARD PRINTS BEARING EARLIER REVISION DATES
REVISION DATES (PRELIMINARY STAGE ONLY)
SHEET 420R1 OF

FILE => I:\bb\04-012001\sas\contract plans and cco\cco\in progress\cco-33\agbwd13.dgn

SAN FRANCISCO OAKLAND BAY BRIDGE
EAST SPAN SEISMIC SAFETY PROJECT
SELF-ANCHORED SUSPENSION BRIDGE
(SUPERSTRUCTURE & TOWER)

BIKEPATH DETAILS NO. 13

100 % PS&E
DATE PLOTTED => 19 JUL 2007 TIME PLOTTED => 14:08:16
USERNAME => ptam

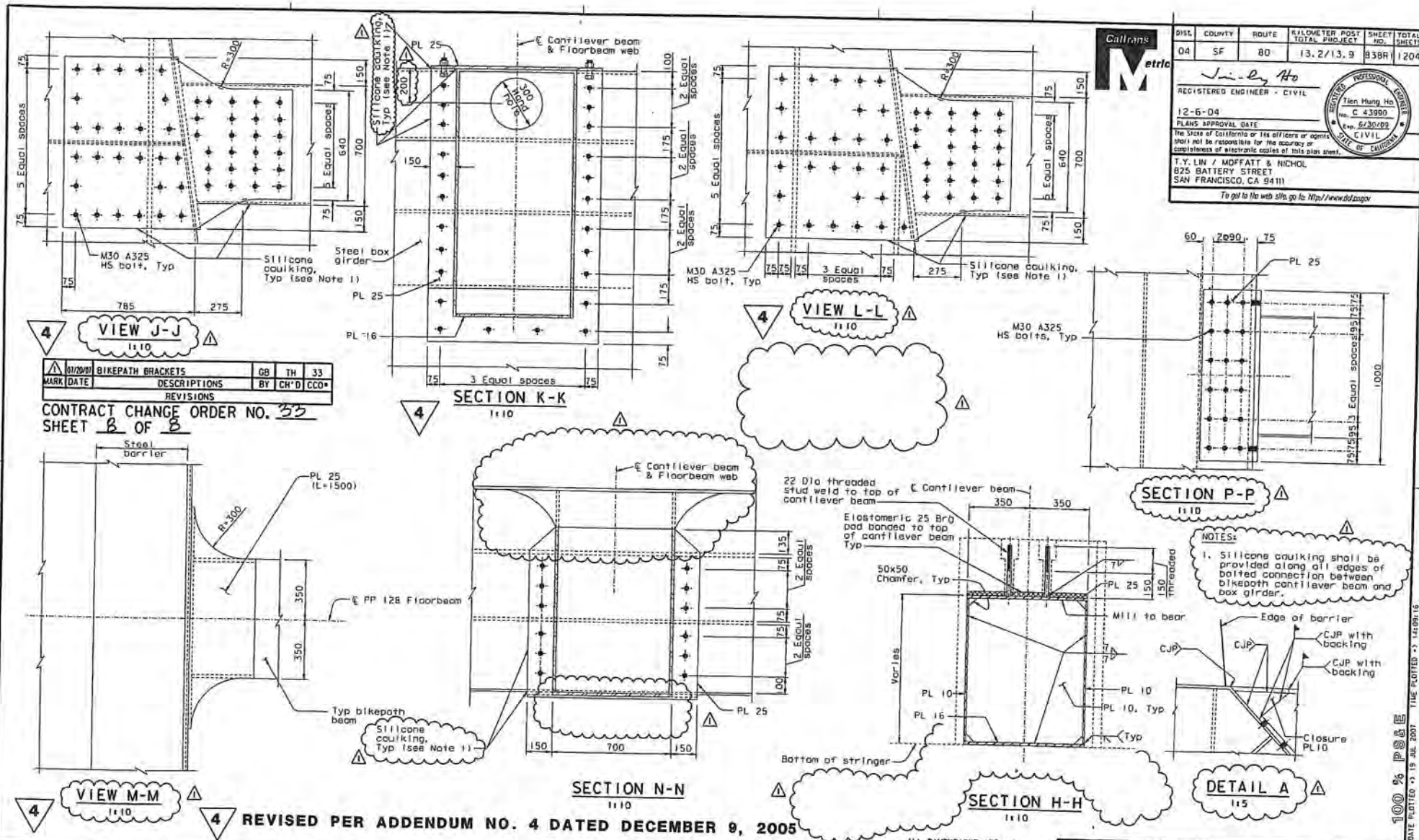

MARK	DATE	DESCRIPTIONS	BY	CH'D	CCO#
1	07/20/07	BIKEPATH BRACKETS	GB	TH	33

REVISIONS

CONTRACT CHANGE ORDER NO. 33
SHEET 8 OF 8

NOTES:

1. Silicone caulking shall be provided along all edges of bolted connection between bikepath cantilever beam and box girder.

4 REVISED PER ADDENDUM NO. 4 DATED DECEMBER 9, 2005

ALL DIMENSIONS ARE IN MILLIMETERS UNLESS OTHERWISE SHOWN

DIST.	COUNTY	ROUTE	KILOMETER POST TOTAL PROJECT	SHEET NO.	TOTAL SHEETS
04	SF	80	13.2/13.9	838R1	1204

REGISTERED ENGINEER - CIVIL
12-6-04
PLANS APPROVAL DATE

The State of California or its officers or agents shall not be responsible for the accuracy or completeness of electronic copies of this plan sheet.

T.Y. LIN / MOFFATT & NICHOL
825 BATTERY STREET
SAN FRANCISCO, CA 94111

To get to the web site, go to: http://www.dot.ca.gov

Caltrans Metric

R. Valizadeh/V. Toon/Y.L./W.L./F.C.
DESIGN OVERSIGHT
STGN OFF DATE 07/20/07
Rev. Date: 5-18-98

DESIGN BY T. Ho — CHECKED T. McMeans
DETAILS BY R. Xu — CHECKED P. Ritchie
QUANTITIES BY C. Bernardo — CHECKED S. Shi

PREPARED FOR THE STATE OF CALIFORNIA DEPARTMENT OF TRANSPORTATION

R. Monzonorez
PROJECT ENGINEER

BRIDGE NO. 34-0006L/R
KILOMETER POST 13.2/13.9

CU 04
EA 0120F1

SAN FRANCISCO OAKLAND BAY BRIDGE
EAST SPAN SEISMIC SAFETY PROJECT
SELF-ANCHORED SUSPENSION BRIDGE (SUPERSTRUCTURE & TOWER)

BIKEPATH DETAILS NO. 14

SHEET 421R1

FILE => I:\bb\04-012001\sas\contract plans and cco\cco\in progress\cco=33\agbwd14.dgn

100 % PS&E
DATE PLOTTED => 19 JUL 2007 TIME PLOTTED => 14:09:16

STATE OF CALIFORNIA - DEPARTMENT OF TRANSPORTATION

CONTRACT CHANGE ORDER MEMORANDUM

DC-CEM-4903 (OLD HC-39 REV. 6/93) CT# 7541-3544-0

DATE: 3/4/2010

TO Pete Siegenthaler, Principal TE	FILE 04-0120F4 04-SF-80-13.2/13.9
FROM Gary Pursell, STE / Richard Morrow, SBE	
CCO NO. 33 / SUPPLEMENT NO. 0 / CATEGORY CODE CHPT	CONTINGENCY BALANCE (including this change) $8,014,909.40
$0.00 INCREASE ☐ DECREASE ☐	HEADQUARTERS APPROVAL REQUIRED? YES ☐ NO ☒
SUPPLEMENTAL FUNDS PROVIDED $	IS THIS REQUEST IN ACCORDANCE WITH ENVIRONMENTAL DOCUMENTS? YES ☒ NO ☐
CCO DESCRIPTION: Bikepath Brackets	PROJECT DESCRIPTION CONSTRUCT SELF-ANCHORED SUSPENSION BRIDGE

Original Contract Time	Time Adj.: This Change	Previously Approved CCO Time Adjustments	Percentage Time Adjusted: (including this change)	Total # of Unreconciled Deferred Time CCO(s): (including this change)
2490 Day(s)	0 Day(s)	227 Day(s)	9 %	6

THIS CHANGE ORDER PROVIDES FOR:

Modifying Eastbound Orthotropic Box Girder (OBG) bikepath attachment brackets. These changes include, but are not limited to, re-spacing bolts to accommodate the sealing bracket, providing caulking around the brackets, eliminating bolt interfering with floor-beam web plate, and increasing the flange plate taper length.

The Designer of Record and the Department concur these changes are required to provide additional bikepath reinforcement and to address bikepath bracket design revisions due to various Department responses to Contractor Requests For Information.

This work is not covered by any contract items. Therefore, payment for this work will be at Adjustment of Compensation at Lump Sum Price for the amount of $150,000.00. Since the cost, of $150,000.00 in this change, is included in Contract Change Order 108 Supplement 1 (CCO 108S1) Claim Settlement Report No. 1 resolution costs the net payment in this change order is zero.

A determination of the delay in completion of the contract due to work specified by Contract Change Order 33, has been made in CCO 108S1 and is part of the Claims Settlement Report (CSR) No. 1 for this project. Therefore, no adjustment of time is warranted by reason of this change order.

This change order received concurrence from Gary Pursell (Resident Engineer), Rick Morrow (Sup. Structure Rep), Peter Siegenthaler (Principal TE), Rich Foley (HQ Oversight), Ken Terpstra (Project Manager), Richard Land (Chief Engineer), Jon Tapping (HQ Coordinator), Tony Anziano (Toll Bridge Program Manager), Brian Maroney (Project Engineer), Wenyi Long (Design Oversight), and Lina Ellis (Structure Maintenance).

Claims Settlement Report (CSR) No. 1 for this project revises the authority to "Issue and Approve" the changes listed in CCO 108S1 Appendices A & B. The authority to "Issue and Approve" the changes listed in Appendices A & B for the values of time and money contemplated therein has been delegated to the District for approval and approval of each of these change orders by the Headquarters CCO Desk will not be required. Since this change order is included in CCO 108S1 no Headquarters CCO Desk "Issue and Approve" is required, a copy of CCO 108S1 is attached for reference.

CONCURRED BY:	DATE
CONSTRUCTION ENGINEER Res. Eng. Gary Pursell	12/21/09
SR. BRIDGE ENGINEER Rick Morrow	12/21/09
FHWA REPRESENTATIVE	DATE
PROJECT MANAGER Proj. Manager, Ken Terpstra	12/21/09
OTHER (SPECIFY) Chief Engineer, Richard Land	12/21/09
PCE, Peter Siegenthaler, Prin TE	12/21/09
DISTRICT PRIOR APPROVAL BY	DATE
HQ (ISSUE & APPROVE) (TO PROCEED) BY Bob Mojena (ISSUE & APPROVE)	12/31/09
RESIDENT ENGINEER SIGNATURE Gary Pursell	3/4/10

ESTIMATE OF COST

	THIS REQUEST	TOTAL TO DATE
ITEMS	$0.00	$0.00
FORCE ACCOUNT	$0.00	$0.00
AGREED PRICE	$0.00	$0.00
ADJUSTMENT	$0.00	$0.00
TOTAL	$0.00	$0.00

FEDERAL PARTICIPATION

☐ PARTICIPATING ☐ PARTICIPATING IN PART ☒ NONE
☐ NON-PARTICIPATING (MAINTENANCE) ☐ NON-PARTICIPATING

FEDERAL SEGREGATION (IF MORE THAN ONE FUNDING SOURCE OR P.I.P. TYPE)
☐ CCO FUNDED PER CONTRACT ☐ CCO FUNDED AS FOLLOWS

FEDERAL FUNDING SOURCE	PERCENT

HC-39 Word(Rev.5/96)

STATE OF CALIFORNIA - DEPARTMENT OF TRANSPORTATION

CONTRACT CHANGE ORDER

Change Requested by: Engineer

CCO: 34	Suppl. No. 0	Contract No. 04 - 0120F4	Road SF-80-13.2/13.9	FED. AID LOC.:

To: **AMERICAN BRIDGE/FLUOR ENTERPRISES INC A JOINT VENT**

You are directed to make the following changes from the plans and specifications or do the following described work not included in the plans and specifications for this contract. ***NOTE: This change order is not effective until approved by the Engineer.***

Description of work to be done, estimate of quantities and prices to be paid. (Segregate between additional work at contract price, agreed price and force account.) Unless otherwise stated, rates for rental of equipment cover only such time as equipment is actually used and no allowance will be made for idle time. This last percentage shown is the net accumulated increase or decrease from the original quantity in the Engineer's Estimate.

Extra Work at Lump Sum:

Pursuant to Section 5-1.14, "Integrated Shop Drawings" of the Special Provisions, revise the project plans per the Contractor's proposed changes in Integrated Shop Drawings (ISD's), to reflect modifications of the Post-Tensioning embeds at the W2 Cap Beam as shown on Sheets Two (2) through Five (5) of this change order.

The following revised contract plan sheets detail all changes:

464R2, 470R3, 472R3 and 473R3 (of 1204)

This change order resolves the costs associated with Contractor Request For Information (RFI) Nos. 205, 213, 519 and 1550 with respect to changes listed above.

For this work, the Contractor will receive a lump sum price of $1,212.00. This sum constitutes full and complete compensation for furnishing all labor, material, tools and incidentals including all markups by reason of this change.

Cost of Extra Work at Lump Sum $1,212.00

Estimated Cost: Increase ☑ Decrease ☐ $1,212.00

By reason of this order the time of completion will be adjusted as follows: 0 days

Submitted by

Signature	Resident Engineer	Date
Gil Klebanov	Gil Klebanov for Gary Pursell, Sup.T.E.	03/09/2009

Approval Recommended by

Signature	Supervising Bridge Engineer	Date
RCMM	Richard Morrow, Sup. BE	3/9/09

Engineer Approval by

Signature	Supervising Transportation Engineer	Date
Gary Pursell	Gary Pursell, Sup. TE	4/7/09

We the undersigned contractor, have given careful consideration to the change proposed and agree, if this proposal is approved, that we will provide all equipment, furnish the materials, except as may otherwise be noted above, and perform all services necessary for the work above specified, and will accept as full payment therefor the prices shown above.

NOTE: If you, the contractor, do not sign acceptance of this order, your attention is directed to the requirements of the specifications as to proceeding with the ordered work and filing a written protest within the time therein specified.

Contractor Acceptance by

Signature	(Print name and title)	Date
[signature]	Michael D. Flowers Project Director	4.1.09

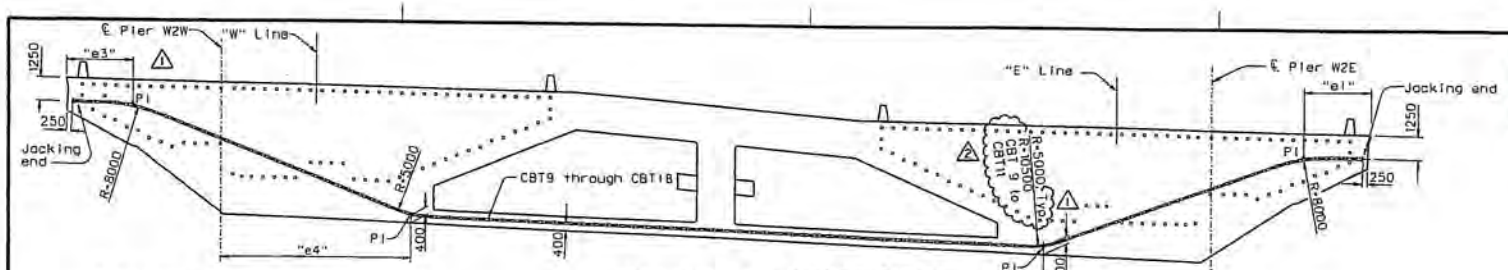

SECTION B-B

1:125

Tendon CBT9 shown for CBT10 through CBT18 see Table

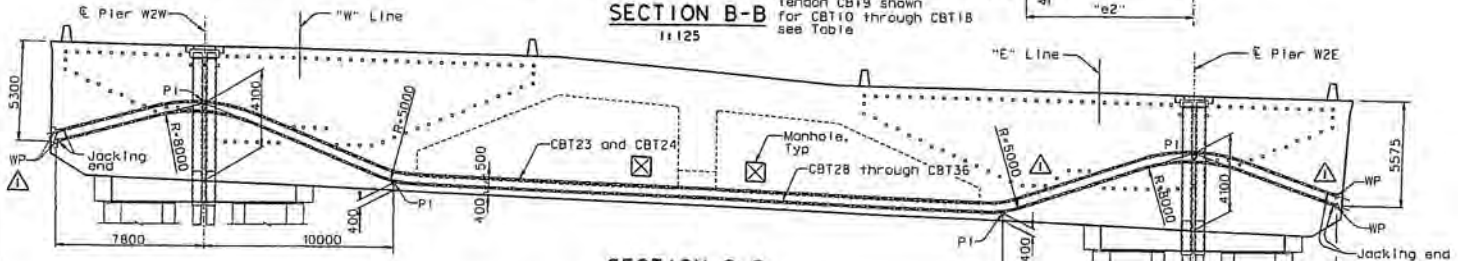

SECTION C-C

1:125

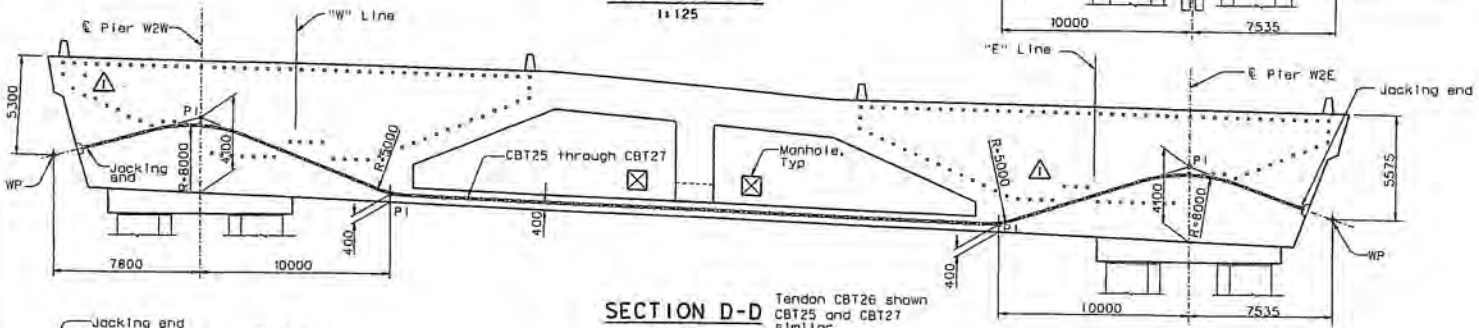

SECTION D-D

1:125

Tendon CBT26 shown CBT25 and CBT27 similar

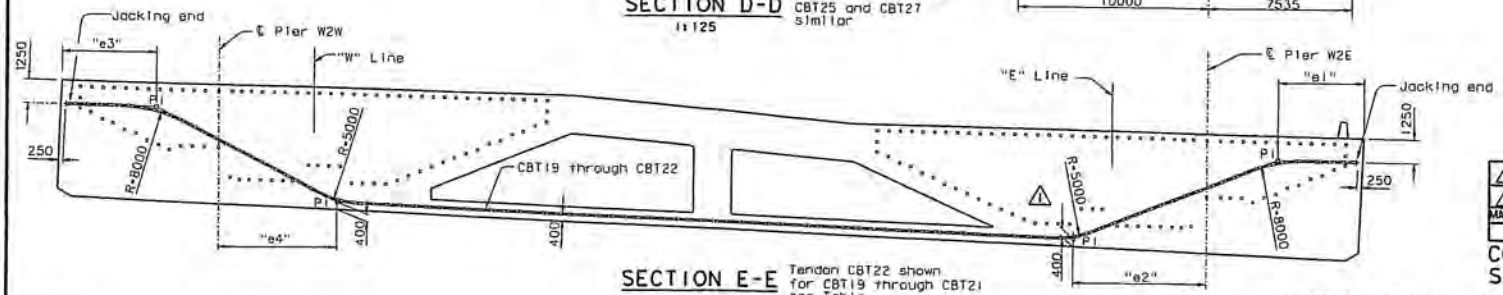

SECTION E-E

1:125

Tendon CBT22 shown for CBT19 through CBT21 see Table

CBT	e1	e2	e3	e4
9-12	3500	9250	3500	10000
13-18	3500	10000	3500	10000
19	3500	10000	3500	10000
20	3500	9000	3500	8750
21	3500	8000	3600	7500
22	4500	7000	5000	6250

NOTES:

1. For additional details, see "W2 Cap Beam Post-Tensioning Details No. 1" sheet.
2. For PT blockout details, see "W2 Cap Beam Blockout Details" sheets.

FOR REVISIONS ONLY

MARK	DATE	DESCRIPTIONS	BY	CH'D	CCO#
2	02/15/07	W2 CAP BEAM ISD RESOLUTION	JD	AS	34
1	01/21/06	W2 CAP BEAM ISD	JD	NV	23

REVISIONS

CONTRACT CHANGE ORDER NO. 34 50

SHEET 2 OF 5

ALL DIMENSIONS ARE IN MILLIMETERS UNLESS OTHERWISE SHOWN

DIST.	COUNTY	ROUTE	KILOMETER POST TOTAL PROJECT	SHEET NO.	TOTAL SHEETS
04	SF	80	13.2/13.9	464R2	1204

REGISTERED ENGINEER - CIVIL

12-6-04

PLANS APPROVAL DATE

The State of California or its officers or agents shall not be responsible for the accuracy or completeness of electronic copies of this plan sheet.

T.Y. LIN / MOFFATT & NICHOL
825 BATTERY STREET
SAN FRANCISCO, CA 94111

Caltrans now has a web site! To get to the web site, go to: http://www.dot.ca.gov

R. Vallizadeh/V. Tsai/Y.L./W.L./F.C.

DESIGN OVERSIGHT

SIGN OFF DATE 02/16/07

Rev. Date: 3-13-95

DESIGN	BY J. Sun	CHECKED M. Chen	
DETAILS	BY J. Duxbury	CHECKED M. Chen	
QUANTITIES	BY S. Shi	CHECKED D. Harrison	

ORIGINAL SCALE IN MILLIMETERS FOR REDUCED PLANS 0 10 20 30 40 50 60 70 80 90 100

PREPARED FOR THE STATE OF CALIFORNIA DEPARTMENT OF TRANSPORTATION

R. Monzanarez
PROJECT ENGINEER

BRIDGE NO. 34-0006L/R
KILOMETER POST 13.2/13.9
CU 04
EA 0120F1

DISREGARD PRINTS BEARING EARLIER REVISION DATES

SAN FRANCISCO OAKLAND BAY BRIDGE
EAST SPAN SEISMIC SAFETY PROJECT
SELF-ANCHORED SUSPENSION BRIDGE
(SUPERSTRUCTURE & TOWER)

W2 CAP BEAM POST-TENSIONING DETAILS NO. 3

REVISION DATES (PRELIMINARY STAGE ONLY) 12/04/03 12/04/03 12/04/03 12/11/03

SHEET 047R2 OF

FILE => I:\bn\04-0120f1\sds\contract plans and ccs\ccs\in progress\cco-34\ccpr03.dgn

USERNAME => 0116hnsk DATE PLOTTED => 15 MAR 2007 TIME PLOTTED => 01:47:36

100 % PS&E

DIST.	COUNTY	ROUTE	KILOMETER POST TOTAL PROJECT	SHEET NO.	TOTAL SHEETS
04	SF	80	13.2/13.9	470R3	1204

REGISTERED ENGINEER - CIVIL

12-6-04
PLANS APPROVAL DATE

REGISTERED PROFESSIONAL ENGINEER John Sun No. C 56648 Exp. 12/31/05 CIVIL STATE OF CALIFORNIA

The State of California or its officers or agents shall not be responsible for the accuracy or completeness of electronic copies of this plan sheet.

T.Y. LIN / MOFFATT & NICHOL
825 BATTERY STREET
SAN FRANCISCO, CA 94111

Caltrans now has a web site! To get to the web site, go to: http://www.dot.ca.gov

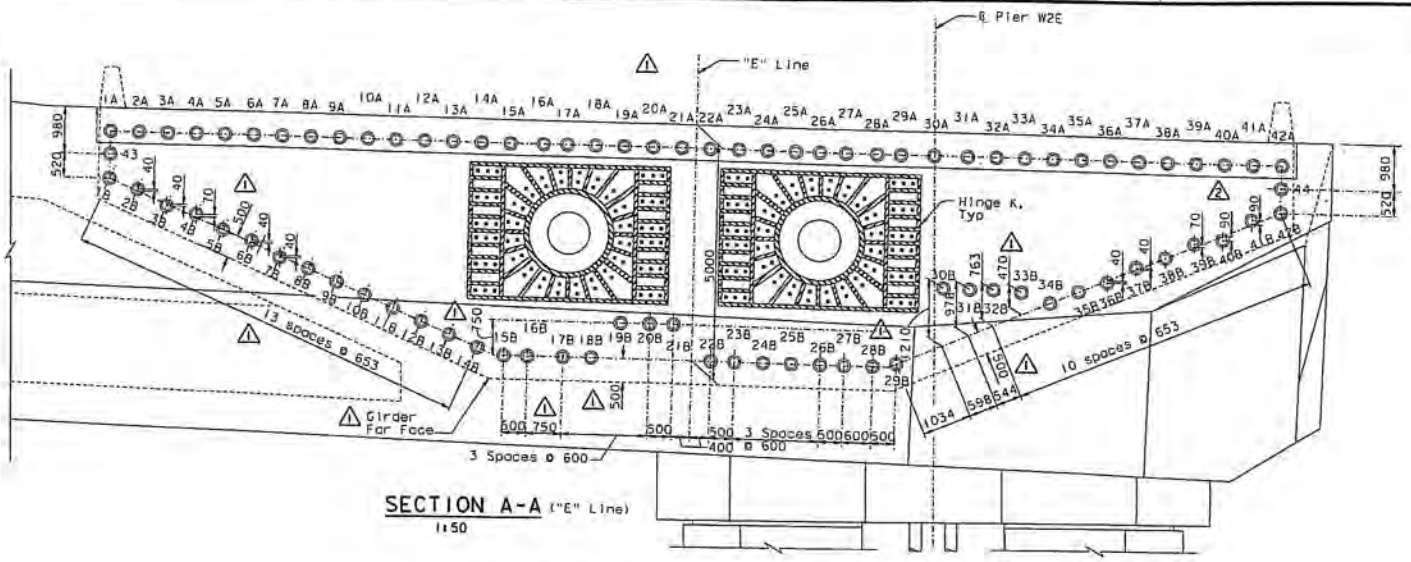

SECTION A-A ("E" Line)
1:50

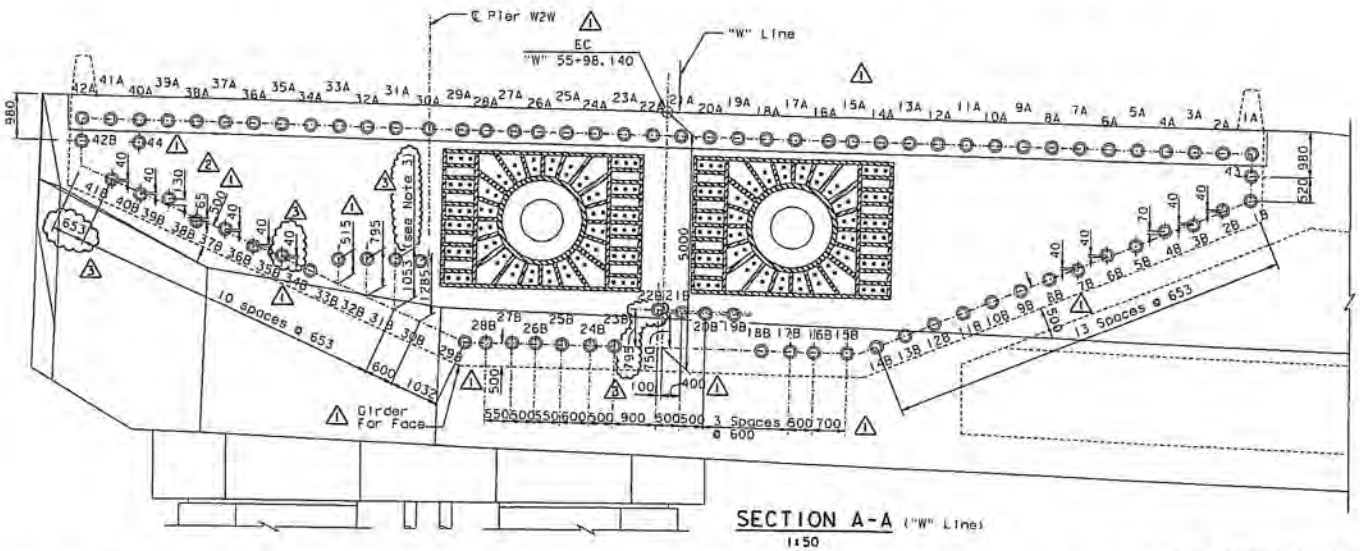

SECTION A-A ("W" Line)
1:50

NOTES:

1. For additional details, see "W2 Cap Beam Post-Tensioning Details No.5" and "W2 Cap Beam Post-Tensioning Details No.7" sheets.
2. Jacking force in the W2 cap beam continuity tendons (1A-42A, 1B-42B, 43 & 44) shall be 5265 kN typical.
3. Offset dimensions are measured perpendicular to a 2% slope, typical.

REGISTERED PROFESSIONAL ENGINEER D. Duxbury No. C 64077 Exp. 06/30/07 CIVIL STATE OF CALIFORNIA

FOR REVISIONS ONLY

MARK	DATE	DESCRIPTIONS	BY	CH'D	CCO#
3	02/16/07	W2 CAP BEAM ISD RESOLUTION	JD	AS	34
2	01/31/07	CORROSION PROTECTION	JD	AS	16
1	07/21/06	W2 CAP BEAM ISD	JD	NV	23

REVISIONS

CONTRACT CHANGE ORDER NO. 34 SP
SHEET 3 OF 5

ALL DIMENSIONS ARE IN MILLIMETERS UNLESS OTHERWISE SHOWN

R. Valizadeh/V. Toan/Y.L./W.L./F.C.
DESIGN OVERSIGHT
Roya Valizadeh / Vinod Toan / Y. Lau
STCH OFF DATE 02/18/07
Rev. Date 3-10-98

DESIGN	BY J. Sun	CHECKED N. Chen	
DETAILS	BY J. Duxbury	CHECKED W. Chen	
QUANTITIES	BY S. Shi	CHECKED D. Harrison	

ORIGINAL SCALE IN MILLIMETERS FOR REDUCED PLANS 0 10 20 30 40 50 60 70 80 90 100

PREPARED FOR THE STATE OF CALIFORNIA DEPARTMENT OF TRANSPORTATION

R. Manzanarez
PROJECT ENGINEER

CU 04
EA 0120F1

BRIDGE NO. 34-0006L/R
KILOMETER POST 13.2/13.9

SAN FRANCISCO OAKLAND BAY BRIDGE
EAST SPAN SEISMIC SAFETY PROJECT
SELF-ANCHORED SUSPENSION BRIDGE
(SUPERSTRUCTURE & TOWER)

W2 CAP BEAM POST-TENSIONING DETAILS NO.9

DISREGARD PRINTS BEARING EARLIER REVISION DATES

REVISION DATES (PRELIMINARY STAGE ONLY)

SHEET 053R3

FILE =J:\11\00\04-012001\sos\contract plans and cos\sos\in progress\cco-34\decpt09.dgn

USERNAME =? BITTENDORFY DATE PLOTTED =? 16 MAR 2007 TIME PLOTTED =? 07:50:57

100 % PSRE

DIST.	COUNTY	ROUTE	KILOMETER POST TOTAL PROJECT	SHEET NO.	TOTAL SHEETS
04	SF	80	13.2/13.9	472R3	1204

REGISTERED ENGINEER - CIVIL

12-6-04

PLANS APPROVAL DATE

The State of California or its officers or agents shall not be responsible for the accuracy or completeness of electronic copies of this plan sheet.

REGISTERED PROFESSIONAL ENGINEER John Sun No. C 54648 Exp. 12/31/05 CIVIL STATE OF CALIFORNIA

T.Y. LIN / MOFFATT & NICHOL
825 BATTERY STREET
SAN FRANCISCO, CA 94111

To get to this web site, go to: http://www.dot.ca.gov

Caltrans Metric

REGISTERED PROFESSIONAL ENGINEER R. Duxbury No. C 64677 Exp. 09/30/07 CIVIL STATE OF CALIFORNIA

FOR REVISIONS ONLY

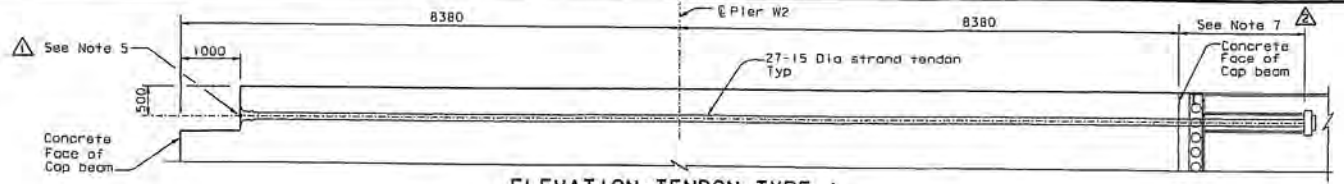

ELEVATION-TENDON TYPE 1

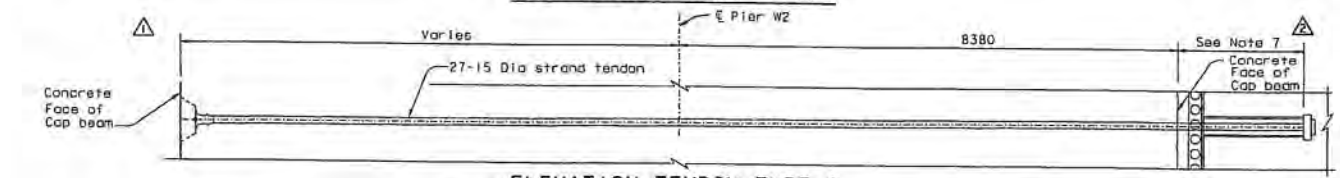

ELEVATION-TENDON TYPE 2

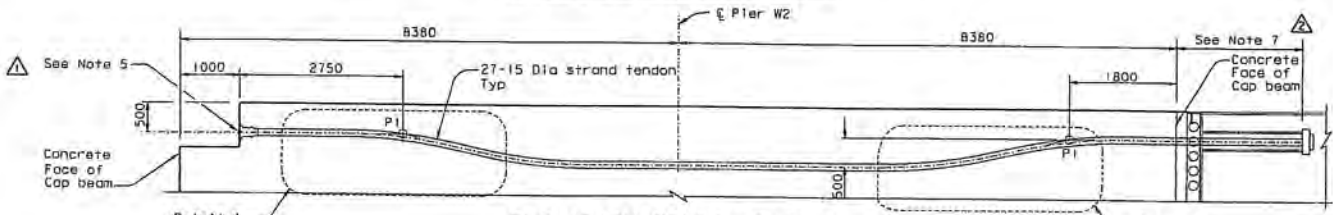

ELEVATION-TENDON TYPE 3

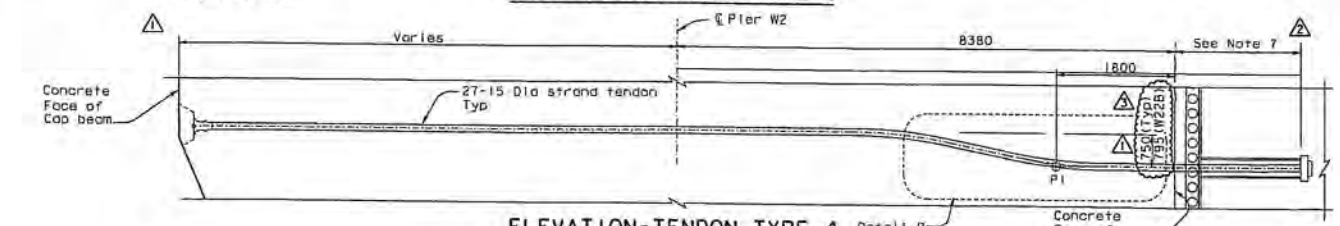

ELEVATION-TENDON TYPE 4

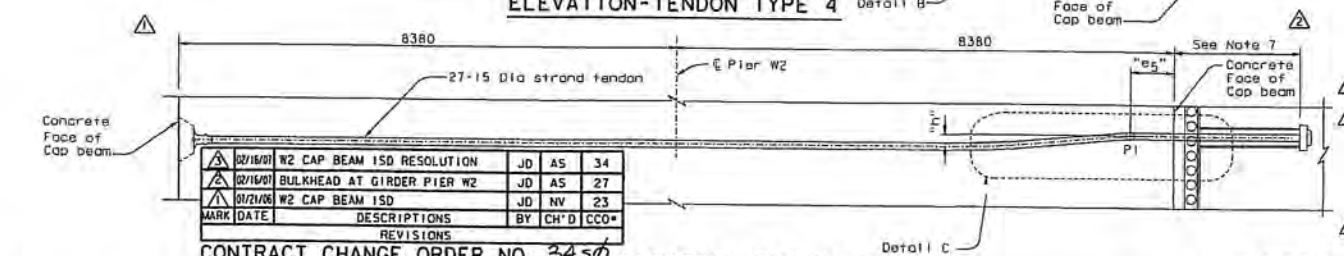

ELEVATION-TENDON TYPE 5

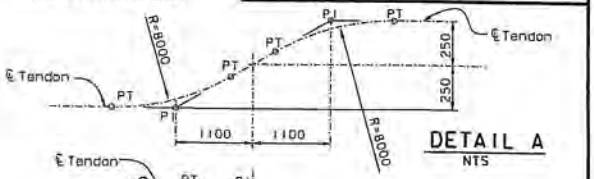

DETAIL A
NTS

DETAIL B
NTS

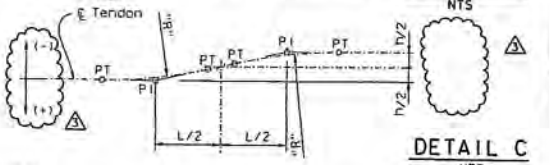

DETAIL C
NTS

NOTES:

1. For additional details, see "W2 Cap Beam Post-Tensioning Details No.5" through "W2 Cap Beam Post-Tensioning Details No.10" sheets.
2. For tendon type designation, see "W2 Cap Beam Post-Tensioning Details No.12" sheet.
3. For PT blockout dimensions, see "W2 Cap Beam Blockout Details" sheets.
4. For dimension "h", "L", "e5" and "R", see "W2 Cap Beam Post-Tensioning Details No.12" sheet.
5. Adjust vertical face to be normal to the axis of the tendon.
6. Jacking of continuity tendons shall not crush the ducts of the CBT transverse tendons. Where necessary, extra strong steel pipes (ASTM A53 type S, Grade B, f_y =240 MPa) shall be provided together with necessary hardware connecting the steel pipes to galvanized corrugated steel duct.
7. For extents of post-tensioning into the Girder at Pier W2, see Top and Bottom tendon layout plans on "W2 Cap Beam Post-Tensioning Details No.5 thru No.8" sheets.

MARK	DATE	DESCRIPTIONS	BY	CH'D	CCO#
3	02/16/07	W2 CAP BEAM ISD RESOLUTION	JD	AS	34
2	02/16/07	BULKHEAD AT GIRDER PIER W2	JD	AS	27
1	01/21/06	W2 CAP BEAM ISD	JD	NV	23

REVISIONS

CONTRACT CHANGE ORDER NO. 34SP
SHEET 4 OF 5

ALL DIMENSIONS ARE IN MILLIMETERS UNLESS OTHERWISE SHOWN

R. Valtzadeh/V. Toon/Y. L. /W. L. /F. C.
DESIGN OVERSIGHT
STON OFF DATE 02/16/07
Rev. Date: 3-08-99

DESIGN	BY J. Sun	CHECKED M. Chen	
DETAILS	BY J. Duxbury	CHECKED M. Chen	
QUANTITIES	BY S. Shi	CHECKED D. Harrison	

PREPARED FOR THE STATE OF CALIFORNIA DEPARTMENT OF TRANSPORTATION

CHECKED R. Manzanarez PROJECT ENGINEER

BRIDGE NO. 34-0006L/R
KILOMETER POST 13.2/13.9

SAN FRANCISCO OAKLAND BAY BRIDGE
EAST SPAN SEISMIC SAFETY PROJECT
SELF-ANCHORED SUSPENSION BRIDGE
(SUPERSTRUCTURE & TOWER)

W2 CAP BEAM POST-TENSIONING DETAILS NO.11

ORIGINAL SCALE IN MILLIMETERS FOR REDUCED PLANS 0 10 20 30 40 50 60 70 80 90 100

CU 04
EA 0120F1

DISREGARD PRINTS BEARING EARLIER REVISION DATES

REVISION DATES (PRELIMINARY STAGE ONLY)

SHEET 055R3 OF

FILE =J:\11\00\04-0120F1\sos\contract plans and ccs\ccs in progress\ccs=34\ccsp11.dgn

USERNAME =J:\pltphonks DATE PLOTTED => 16 MAR 2007 TIME PLOTTED => 07:52:11

100 % PS&E

W2 CAP BEAM CONTINUITY TENDON TABLE-1 FOR "E" LINE

Tendon No.	Type	Tendon No.	Type
1A	1	24A	1
1B	2	24B	2
2A	1	25A	1
2B	5	25B	2
3A	1	26A	1
3B	5	26B	2
4A	1	27A	1
4B	5	27B	2
5A	1	28A	1
5B	2	28B	2
6A	1	29A	3
6B	5	29B	2
7A	1	30A	3
△1 7B	5	30B	5, 9
8A	1	31A	3
8B	2	31B	5
9A	1	32A	1
9B	2	32B	5
10A	1	33A	1
10B	2	33B	5
11A	1	34A	1
11B	2	34B	2
12A	1	35A	1
12B	2	35B	2
13A	1	36A	1
13B	2	36B	5
14A	1	37A	1
14B	2	37B	5
15A	1	38A	1
15B	8 △1	38B	2
16A	1	39A	1
16B	8 △1	39B	5
17A	1	40A	1
17B	2	40B	5
18A	1	41A	1
18B	10 △1	41B	5
19A	1	42A	1
19B	4	42B	2
20A	1	43	2
20B	4	44	2
21A	1		
21B	4		
22A	1		
22B	2		
23A	1		
23B	2		

W2 CAP BEAM CONTINUITY TENDON TABLE-1 FOR "W" LINE

Tendon No.	Type	Tendon No.	Type
1A	1	24A	1
1B	2	24B	2
2A	1	25A	1
2B	5	25B	2
3A	1	26A	1
△1 3B	5	26B	8
4A	1	27A	1
△1 4B	5	27B	8
5A	1	28A	1
5B	2	28B	2
6A	1	29A	3
6B	5	29B	2
7A	1	30A	3
△1 7B	5	30B	5, 9
8A	1	31A	3
8B	2	31B	5
9A	1	32A	1
9B	2	32B	5
10A	1	33A	1
10B	2	33B	5
11A	1	34A	1
11B	2	34B	2
12A	1	35A	1
12B	2	35B	(5) △3
13A	1	36A	1
13B	2	36B	5
14A	1	37A	1
14B	2	37B	5
15A	1	38A	1
15B	2	38B	5 △2
16A	1	39A	1
16B	2	39B	5 △3
17A	1	40A	1
17B	2	40B	5
18A	1	41A	1
18B	2	41B	5 △2
19A	1	42A	1
19B	4	42B	6 △1
20A	1	43	2
20B	4	44	7 △1
21A	1		
21B	4, 8 △1		
22A	1		
22B	4, 8 △1		
23A	1		
23B	2		

W2 CAP BEAM CONTINUITY TENDON TABLE-2 FOR "E" LINE

Tendon No.	h	L	e_5	R
2B	-40	2200	500	8000
3B	+40	2200	500	8000
4B	-70	2200	500	8000
6B	-40	2200	500	8000
7B	+40	2200	500	8000
△1 30B △3	-1300	2400	1200	4000
31B	-978	2400	1200	5000
32B	-763	2400	1200	4000
△1 33B	-470	2400	1200	8000
36B	+40	2200	500	8000
37B	-40	2200	500	8000
39B	-70	2200	500	8000
40B	△2 +90	2200	500	8000
41B	-90	2200	500	8000

△1

Tendon No.	p
15B	-50
16B	-50
30B	+200

W2 CAP BEAM CONTINUITY TENDON TABLE-2 FOR "W" LINE

Tendon No.	h	L	e_5	R
2B	-40	2200	500	8000
3B	+40	2200	500	8000
4B	-70	2200	500	8000
6B	-40	2200	500	8000
7B	+40	2200	500	8000
△1 30B △3	-1375	-2400	1200	4000
31B	-1053	2400	1200	5000
32B	-795	2400	1200	5000
△1 33B	-515	2400	1200	8000
35B	-40	2200	500	8000
36B	+40	2200	500	8000
37B	-40	2200	500	8000
38B	+65	2200	500	8000 △2
39B	-130	2200	500	8000
40B	+40	2200	500	8000
41B	-40	2200	500	8000

△1

Tendon No.	p
21B	+100
22B	+100
26B	-50
27B	-50
30B	-200
44	+1200

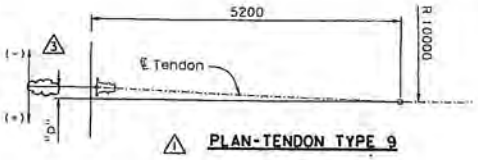

△1 PLAN-TENDON TYPE 9

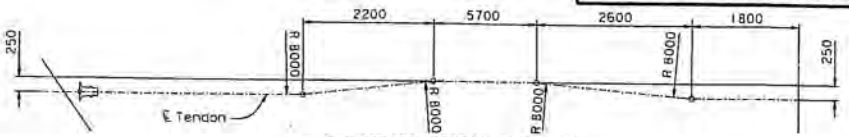

△1 ELEVATION-TENDON TYPE 10

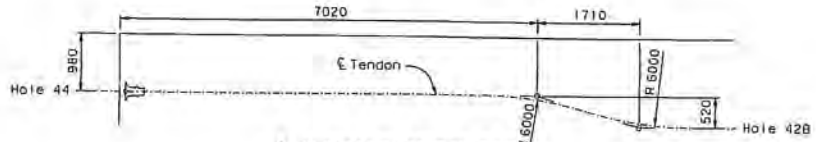

△1 ELEVATION-TENDON TYPE 6

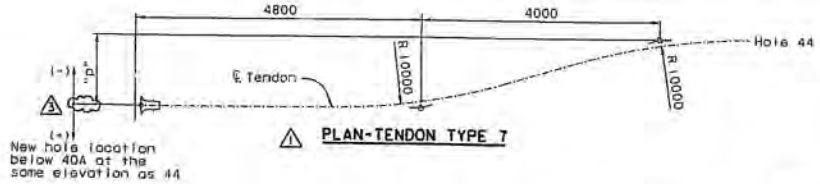

△1 PLAN-TENDON TYPE 7

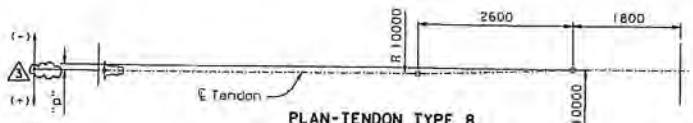

△1 PLAN-TENDON TYPE 8

NOTES:

1. For Type 1 through Type 5 tendon geometry, see "W2 Cap Beam Post-Tensioning Details No. 11" sheet.
2. For general stressing sequence, see "Pier W2 Construction Sequence" sheet.
3. For additional prestressing details, see "Prestressing Notes" sheet.

ALL DIMENSIONS ARE IN MILLIMETERS UNLESS OTHERWISE SHOWN

DIST.	COUNTY	ROUTE	KILOMETER POST TOTAL PROJECT	SHEET NO.	TOTAL SHEETS
04	SF	80	13.2/13.9	473R3	1204

REGISTERED ENGINEER - CIVIL

12-6-04
PLANS APPROVAL DATE

REGISTERED PROFESSIONAL ENGINEER John Sun No. C 54648 Exp. 12/31/05 CIVIL STATE OF CALIFORNIA

The State of California or its officers or agents shall not be responsible for the accuracy or completeness of electronic copies of this plan sheet.

T.Y. LIN / MOFFATT & NICHOL
825 BATTERY STREET
SAN FRANCISCO, CA 94111

To get to the web site, go to: http://www.dot.ca.gov

MARK	DATE	DESCRIPTIONS	BY	CH'D	CCO#
3	02/15/07	W2 CAP BEAM ISD RESOLUTION	JD	AS	34
2	01/31/07	CORROSION PROTECTION	JD	AS	16
1	01/21/06	W2 CAP BEAM ISD	JD	NV	23

REVISIONS

FOR REVISIONS ONLY

REGISTERED PROFESSIONAL ENGINEER John P. Duxbury No. C 64677 Exp. 06/30/07 CIVIL STATE OF CALIFORNIA

CONTRACT CHANGE ORDER NO. 34 SP
SHEET 5 OF 5

100 % PS&E

SAN FRANCISCO OAKLAND BAY BRIDGE
EAST SPAN SEISMIC SAFETY PROJECT
SELF-ANCHORED SUSPENSION BRIDGE
(SUPERSTRUCTURE & TOWER)

W2 CAP BEAM POST-TENSIONING DETAILS NO. 12

R. Vallizadeh/V. Toon/Y.L./N.L./F.C.
DESIGN OVERSIGHT
Ron Vallizadeh / Vong Toon / Y. Lee
SIGN OFF DATE 02/16/07
Rev. Date: 3-18-98

DESIGN	BY J. Sun	CHECKED M. Chen	
DETAILS	BY J. Duxbury	CHECKED M. Chen	
QUANTITIES	BY S. Shi	CHECKED D. Harrison	

PREPARED FOR THE STATE OF CALIFORNIA DEPARTMENT OF TRANSPORTATION

R. Manzanarez
PROJECT ENGINEER

BRIDGE NO. 34-0006L/R
KILOMETER POST 13.2/13.9

CU 04
EA 0120F1

ORIGINAL SCALE IN MILLIMETERS FOR REDUCED PLANS 0 10 20 30 40 50 60 70 80 90 100

DISREGARD PRINTS BEARING EARLIER REVISION DATES

REVISION DATES (PRELIMINARY STAGE ONLY)

SHEET 056R3 OF

FILE =J:\\bb\04-0120f1\sds\contract plans and eco\eco\in progress\eco#34\bbcpt12.dgn

DATE PLOTTED => 16 MAR 2007 TIME PLOTTED => 07:54:21

DGNSIZE => 01:07:00:00:Y

STATE OF CALIFORNIA - DEPARTMENT OF TRANSPORTATION

CONTRACT CHANGE ORDER MEMORANDUM

DATE: 4/6/2009

TO: Pete Siegenthaler, Prin. TE / Gary Pursell, P.E., Sup T.E.	FILE: E.A. 04 - 0120F4 CO-RTE-PM SF-80-13.2/13.9 FED. NO.
FROM: Gary Pursell, P.E., Sup.T.E.	
CCO#: 34 SUPPLEMENT#: 0 Category Code: CHSA	CONTINGENCY BALANCE (incl. this change) $100,792,393.40
COST: $1,212.00 INCREASE ☑ DECREASE ☐	HEADQUARTERS APPROVAL REQUIRED? ☐ YES ☑ NO
SUPPLEMENTAL FUNDS PROVIDED: $1,212.00	IS THIS REQUEST IN ACCORDANCE WITH ENVIRONMENTAL DOCUMENTS? ☑ YES ☐ NO
CCO DESCRIPTION: Rev W2 Post Tension per Contractor ISD's	**PROJECT DESCRIPTION:** CONSTRUCT SELF-ANCHORED SUSPENSION BRIDGE

Original Contract Time:	Time Adj. This Change:	Previously Approved CCO Time Adjustments:	Percentage Time Adjusted: (including this change)	Total # of Unreconciled Deferred Time CCO(s): (including this change)
2490 Day(s)	0 Day(s)	30 Day(s)	1 %	6

THIS CHANGE ORDER PROVIDES FOR:

Pursuant to Section 5-1.14, "Integrated Shop Drawings" of the Special Provisions, revise the project plans per the Contractor's proposed changes in Integrated Shop Drawings (ISD's) to reflect modifications of the Post-Tensioning embeds at the W2 Cap Beam as directed by the Engineer.

As required per Section 5-1.14, "Integrated Shop Drawings" of the Special Provisions, it is necessary to make modifications to the project plans to reflect changes to resolve conflicts encountered from the Contractor's ISD CAD models.

This work is not covered by any contract items. Therefore, payment for the Extra Work will be a Lump Sum of $1,212.00, which can be financed from the contingency fund. A total of $538,000.00 has been allocated in supplemental funds for this work. A detailed cost analysis is on file.

No adjustment of contract time is warranted, as this change does not affect the controlling operation.

This change order received concurrence from Gary Pursell (Resident Engineer), Rick Morrow (Structure Rep.), Ken Terpstra (Project Manager), Pete Siegenthaler (Principal Engineer), Robert Kobal (HQ Rep), Marwan Nader (Design of Record) and Wenyi Long (OSCM). Maintenance concurrence is not require for this change.

This change order was field approved by the Resident Engineer.

CONCURRED BY:			
Construction Engineer:	Res. Eng., Gary Pursell, Sup. TE	Date	2/22/07
Bridge Engineer:	Struct Rep, Rick Morrow, Sup TE	Date	2/20/07
Project Engineer:	Design of Record, Marwan Nader,	Date	3/16/07
Project Manager:	Proj Manager, Ken Terpstra	Date	2/9/09
FHWA Rep.:		Date	
Environmental:		Date	
Other (specify):	CT Oversight, Wenyi Long, P.E.	Date	8/28/07
Other (specify):	Struct. Maint, Lina Ellis	Date	8/29/07
District Prior Approval By:		Date	
HQ (Issue Approve) By:		Date	
Resident Engineer's Signature:	Gary Pursell	Date	4/7/09

ESTIMATE OF COST

	THIS REQUEST	TOTAL TO DATE
ITEMS	$0.00	$0.00
FORCE ACCOUNT	$0.00	$0.00
AGREED PRICE	$1,212.00	$1,212.00
ADJUSTMENT	$0.00	$0.00
TOTAL	$1,212.00	$1,212.00

FEDERAL PARTICIPATION

☐ PARTICIPATING ☐ PARTICIPATING IN PART ☑ NONE
☐ NON-PARTICIPATING (MAINTENANCE) ☐ NON-PARTICIPATING

FEDERAL SEGREGATION (if more than one Funding Source or P.I.P. type)
☐ CCO FUNDED PER CONTRACT ☐ CCO FUNDED AS FOLLOWS

FEDERAL FUNDING SOURCE	PERCENT

ADA Notice: For individuals with sensory disabilities, this document is available in alternate formats. For information call: (916) 654-6410 or TDD (916) 654-3880 or write Records and Forms Management, 1120 N Street, MS-89, Sacramento, CA 95814.

STATE OF CALIFORNIA - DEPARTMENT OF TRANSPORTATION

CONTRACT CHANGE ORDER

Change Requested by: Engineer

CCO: 34 Suppl. No. 1 Contract No. 04 – 0120F4 Road SF-80-13.2/13.9 **FED. AID LOC.:**

To: **AMERICAN BRIDGE/FLUOR ENTERPRISES INC A JOINT VENTURE**

You are directed to make the following changes from the plans and specifications or do the following described work not included in the plans and specifications for this contract. ***NOTE: This change order is not effective until approved by the Engineer.***

Description of work to be done, estimate of quantities and prices to be paid. (Segregate between additional work at contract price, agreed price and force account.) Unless otherwise stated, rates for rental of equipment cover only such time as equipment is actually used and no allowance will be made for idle time. This last percentage shown is the net accumulated increase or decrease from the original quantity in the Engineer's Estimate.

Adjustment of Compensation at Lump Sum Price:

ITEM 1.

In accordance with Special Provisions Section 5-1.14, "Integrated Shop Drawings" modify reinforcing steel details at the W2 Cap Beam as shown on Sheets two (2) through thirty nine (39) of this change order.

The following revised and supplemental plan sheets detail all changes: 456R2, 457R2, 462R3, 463R3, 465R2, 466R4, 468R4, 483R2, 484R2, 485R2, 486R2, 486S1, 486S2, 492R2, 493R2, 495R2, 497S04R1, 497S06R1, 497S07R1, 497S08R1, 497S09R1, 497S10R1, 497S16R1, 497S20R1, 497S21R1, 497S22R1, 497S23R1, 497S23A, 497S24R1, 497S25R3, 500R2, 772R1, 773R2, 829R1, 830R1, 831R1, 832R1 and 891R1 (of 1204).

This change order resolves the Contractor's Request For Information (RFI's) 21, 176, 327, 383, 501, 502, 576, 592, 593, 594, 598, 598R1, 616, 632R1, 655, 656, 657, 658, 659, 660, 661, 661R1, 667, 668, 677, 690, 691, 1550 and 1721 as related to Integrated Shop Drawings.

For this work the Contractor shall receive and accept the sum of $247,919.00. This sum constitutes full and complete compensation for furnishing all labor, material, tools and incidentals including all markups by reason of this Change.

Adjustment of Compensation at Lump Sum Price..... $247,919.00

ITEM 2.

The items identified above in this change order have been paid as part of CCO 108 resolution. Therefore, the amount due under this change order will be adjusted by the amount paid under CCO 108 to prevent a double payment. Total amount paid under CCO 108, and to be credited to this change, is $247,919.00.

Adjustment of Compensation at Lump Sum Price..... <$247,919.00>

CHANGE ORDER COST AND TIME SUMMARY

(ITEM 1) Adjustment of Compensation for work pursuant to this change order	$247,919.00
(ITEM 2) Amount paid under CCO 108 for this change order	<$247,919.00>
Total net pay for this change order	$0.00

Contract time is addressed in CCO 108 for all work identified in this change order. Therefore, contract time will not be adjusted in this change order.

Estimated Cost: Increase ☐ Decrease ☐ $0.00

By reason of this order the time of completion will be adjusted as follows: 0 days

Submitted by

Signature Gil Klebanov **Resident Engineer** Gil Klebanov for Gary Pursell, Sup.T.E. **Date** 2/28/2010

Approval Recommended by

Signature **Supervising Transportation Engineer** for Gary Pursell, Sup.T.E. **Date** 3/1/2010

Engineer Approval by

Signature Gary Pursell **Supervising Transportation Engineer** Gary Pursell, Sup.T.E. **Date** 4/8/10

We the undersigned contractor, have given careful consideration to the change proposed and agree, if this proposal is approved, that we will provide all equipment, furnish the materials, except as otherwise be noted above, and perform all services necessary for the work above specified, and will accept as full payment therefor the prices shown above.

NOTE: If you, the contractor, do not sign acceptance of this order, your attention is directed to the requirements of the specifications as to proceeding with the ordered work and filing a written protest within the time therein specified.

Contractor Acceptance by

Signature (Print name and title) Michael D. Flowers Project Director **Date** 4-5-10

STATE OF CALIFORNIA - DEPARTMENT OF TRANSPORTATION

CONTRACT CHANGE ORDER

Change Requested by: Engineer

CCO: 34 Suppl. No. 2 Contract No. 04 – 0120F4 Road SF-80-13.2/13.9 **FED. AID LOC.:**

To: **AMERICAN BRIDGE/FLUOR ENTERPRISES INC A JOINT VENTURE**

You are directed to make the following changes from the plans and specifications or do the following described work not included in the plans and specifications for this contract. ***NOTE: This change order is not effective until approved by the Engineer.***

Description of work to be done, estimate of quantities and prices to be paid. (Segregate between additional work at contract price, agreed price and force account.) Unless otherwise stated, rates for rental of equipment cover only such time as equipment is actually used and no allowance will be made for idle time. This last percentage shown is the net accumulated increase or decrease from the original quantity in the Engineer's Estimate.

Adjustment of Compensation at Lump Sum Price:

ITEM 1.

Allow, as a Contractor option, the use of twenty-four (24), 37-strand tendons in lieu of sixteen (16), 55-strand tendons for the E2 Cap Beam post-tensioning as shown on sheets two (2) and three (3) of this change order. The following revised plan sheets detail all changes: 514R2 and 515R2 (of 1204).

This change order resolves Contractor Request for Information (RFI) 778R0 and Request for Change Order (RFCO) 14 with respect to changes to the above referenced sheets.

For this work, the Contractor will be paid the sum of $19,282.00. This sum constitutes full compensation, including all markups, for this change.

Adjustment of Compensation at Lump Sum Price..... $19,282.00

ITEM 2.

The items identified above in this change order have been paid as part of CCO 108 resolution. Therefore, the amount due under this change order will be adjusted by the amount paid under CCO 108 to prevent a double payment. Total amount paid under CCO 108, and to be credited to this change, is $19,282.00.

Adjustment of Compensation at Lump Sum Price..... <$19,282.00>

CHANGE ORDER COST AND TIME SUMMARY

(ITEM 1) Adjustment of Compensation for work pursuant to this change order	$19,282.00
(ITEM 2) Amount paid under CCO 108 for this change order	<$19,282.00>
Total net pay for this change order	$0.00

Contract time is addressed in CCO 108 for all work identified in this change order. Therefore, contract time will not be adjusted in this change order.

Estimated Cost: Increase ☐ Decrease ☐ $0.00

By reason of this order the time of completion will be adjusted as follows: 0 days

Submitted by

Signature Gil Klebanov **Resident Engineer** Gil Klebanov for Gary Pursell, Sup.T.E. **Date** 2/26/2010

Approval Recommended by

Signature Gary Pursell **Supervising Transportation Engineer** Gary Pursell, Sup.T.E. **Date** 3/1/10

Engineer Approval by

Signature Gary Pursell **Supervising Transportation Engineer** Gary Pursell, Sup.T.E. **Date** 3/11/10

We the undersigned contractor, have given careful consideration to the change proposed and agree, if this proposal is approved, that we will provide all equipment, furnish the materials, except as otherwise be noted above, and perform all services necessary for the work above specified, and will accept as full payment therefor the prices shown above.

NOTE: If you, the contractor, do not sign acceptance of this order, your attention is directed to the requirements of the specifications as to proceeding with the ordered work and filing a written protest within the time therein specified.

Contractor Acceptance by

Signature Michael D. Flowers **(Print name and title)** Michael D. Flowers Project Director **Date** 3-5-10

STATE OF CALIFORNIA - DEPARTMENT OF TRANSPORTATION

CONTRACT CHANGE ORDER

Change Requested by: Contractor

CCO: 35	Suppl. No. 0	Contract No. 04 - 0120F4	Road SF-80-13.2/13.9	FED. AID LOC.:

To: **AMERICAN BRIDGE/FLUOR ENTERPRISES INC A JOINT VENT**

You are directed to make the following changes from the plans and specifications or do the following described work not included in the plans and specifications for this contract. ***NOTE: This change order is not effective until approved by the Engineer.***

Description of work to be done, estimate of quantities and prices to be paid. (Segregate between additional work at contract price, agreed price and force account.) Unless otherwise stated, rates for rental of equipment cover only such time as equipment is actually used and no allowance will be made for idle time. This last percentage shown is the net accumulated increase or decrease from the original quantity in the Engineer's Estimate.

Allow the Contractor to use the Quadrel iQdrum "QDRUM" calorimeter to measure Adiabatic Heat Signature in lieu of the "Heat of Hydration" method for determining the adiabatic temperature rise of concrete as required in Section 10-1.45, "CONCRETE STRUCTURES", subsection "Heat of Hydration" of the Contract Special Provisions.

All work shall be in accordance with the Contract Special Provisions and applicable ASTM Specifications.

This is a Contractor requested change order.

The Contractor agrees to perform this work at no additional cost to the Department.

Estimated Cost: **Increase** ☐ **Decrease** ☐ **$0.00**

By reason of this order the time of completion will be adjusted as follows: 0 days

Submitted by		
Signature Gary Pursell	**Resident Engineer** Gary Pursell, P.E., Sup.T.E.	**Date** 3/30/07
Approval Recommended by		
Signature Richard Morrow	**Supervising Bridge Engineer** Richard Morrow, P.E., Sup. BE	**Date** 3/30/07
Engineer Approval by		
Signature Gary Pursell	**Supervising Transportation Engineer** Gary Pursell, P.E., Sup. TE	**Date** 4/16/07

We the undersigned contractor, have given careful consideration to the change proposed and agree, if this proposal is approved, that we will provide all equipment, furnish the materials, except as may otherwise be noted above, and perform all services necessary for the work above specified, and will accept as full payment therefor the prices shown above.

NOTE: If you, the contractor, do not sign acceptance of this order, your attention is directed to the requirements of the specifications as to proceeding with the ordered work and filing a written protest within the time therein specified.

Contractor Acceptance by		
Signature Michael D. Flowers	**(Print name and title)** Michael D. Flowers Project Director	**Date** 4-11-07

STATE OF CALIFORNIA - DEPARTMENT OF TRANSPORTATION

CONTRACT CHANGE ORDER MEMORANDUM

DATE: 4/16/2007 Page 1 of 1

TO: Pete Siegenthaler, Prin. TE / Gary Pursell, P.E., Sup T.E.	FILE: E.A. 04 - 0120F4
FROM: Gary Pursell, P.E., Sup.T.E.	CO-RTE-PM SF-80-13.2/13.9
	FED. NO.
CCO#: 35 SUPPLEMENT#: 0 Category Code: CHSA	CONTINGENCY BALANCE (incl. this change) $144,855,532.34
COST: $0.00 INCREASE ☐ DECREASE ☐	HEADQUARTERS APPROVAL REQUIRED? ☑ YES ☐ NO
SUPPLEMENTAL FUNDS PROVIDED: $0.00	IS THIS REQUEST IN ACCORDANCE WITH ENVIRONMENTAL DOCUMENTS? ☑ YES ☐ NO
CCO DESCRIPTION: QDRUM Concrete Test Procedure	**PROJECT DESCRIPTION:** CONSTRUCT SELF-ANCHORED SUSPENSION BRIDGE

Original Contract Time:	Time Adj. This Change:	Previously Approved CCO Time Adjustments:	Percentage Time Adjusted: (including this change)	Total # of Unreconciled Deferred Time CCO(s): (including this change)
2490 Day(s)	0 Day(s)	30 Day(s)	1 %	0

THIS CHANGE ORDER PROVIDES FOR:

Allowing Contractor to use Quadrel iQdrum "QDRUM" calorimeter to measure Adiabatic Heat Signature in lieu of "Heat of Hydration" for determining the adiabatic temperature rise of concrete as required in Section 10-1.45, "CONCRETE STRUCTURES" of the Contract Special Provisions.

The QDRUM testing method has become a recent standard industry practice. In lieu of calculating the adiabatic temperature rise of the sample from four (4) data points on an hourly basis, as required in the Special Provisions, this procedure shall measure the adiabatic temperature rise of the entire sample at fifteen minute intervals. This procedure increases accuracy and also takes into account the effects of admixtures on setting time and rate of heat generation.

The QDRUM data has been used successfully to test concrete samples on the Skyway, E2/T1 and W2 portions of the bridge. Sufficient sample data is gathered in seven (7) to ten (10) days versus twenty eight (28) days using method specified in the Special Provisions.

This change is in response to Contractor (RFI 137), which proposed this method be implemented as a no cost / no time change order.

This change order has received concurrence from HQ Materials (Ken Beede), Structure Rep (Rick Morrow), Principal Bridge Engineer (Pete Siegenthaler), HQ Construction Coordinator (Rob Kobal) and Project Engineer (Reza Valizadeh).

A HQ Division of Construction "Issue and Approve" was obtained on 4/3/2007 for this Change Order. A copy is attached for your reference.

CONCURRED BY:			
Construction Engineer:	Res. Eng., Gary Pursell, Sup. TE	Date	2/15/07
Bridge Engineer:	Struct Rep, Rick Morrow, Sup TE	Date	2/15/07
Project Engineer:	CT Oversight, Reza Valizadeh, P.E	Date	4/4/07
Project Manager:		Date	
FHWA Rep.:	HQ, Rob Kobal	Date	2/14/07
Environmental:		Date	
Other (specify):	HQ Materials, Ken Beede	Date	2/14/07
Other (specify):	PCE, Pete Siegenthaler, Prin TE	Date	2/16/07
District Prior Approval By:		Date	
HQ (Issue Approve) By:	HQ, Ken Darby	Date	4/3/07
Resident Engineer's Signature:	Gary Pursell	Date	4/16/07

ESTIMATE OF COST

	THIS REQUEST	TOTAL TO DATE
ITEMS	$0.00	$0.00
FORCE ACCOUNT	$0.00	$0.00
AGREED PRICE	$0.00	$0.00
ADJUSTMENT	$0.00	$0.00
TOTAL	$0.00	$0.00

FEDERAL PARTICIPATION

☐ PARTICIPATING ☐ PARTICIPATING IN PART ☑ NONE
☐ NON-PARTICIPATING (MAINTENANCE) ☐ NON-PARTICIPATING

FEDERAL SEGREGATION (if more than one Funding Source or P.I.P. type)
☑ CCO FUNDED PER CONTRACT ☐ CCO FUNDED AS FOLLOWS

FEDERAL FUNDING SOURCE	PERCENT

ADA Notice: For individuals with sensory disabilities, this document is available in alternate formats. For information call: (916) 654-6410 or TDD (916) 654-3880 or write Records and Forms Management, 1120 N Street, MS-89, Sacramento, CA 95814.

CONTRACT CHANGE ORDER

Change Requested by: Engineer

CCO: 36	Suppl. No. 0	Contract No. 04 - 0120F4	Road SF-80-13.2/13.9	FED. AID LOC.:

To: **AMERICAN BRIDGE/FLUOR ENTERPRISES INC A JOINT VENT**

You are directed to make the following changes from the plans and specifications or do the following described work not included in the plans and specifications for this contract. ***NOTE: This change order is not effective until approved by the Engineer.***

Description of work to be done, estimate of quantities and prices to be paid. (Segregate between additional work at contract price, agreed price and force account.) Unless otherwise stated, rates for rental of equipment cover only such time as equipment is actually used and no allowance will be made for idle time. This last percentage shown is the net accumulated increase or decrease from the original quantity in the Engineer's Estimate.

Increase tower base dowel anchorage diameter to 200 mm, enlarge spacing between base plates to 20 mm and provide reimbursement for revising shop drawings relative to this change as shown on sheets three (3) through five (5) of this change order.

This change order resolves Contractor Request For Information (RFI) Nos. 25, 34, 390 and 390R1 with respect to changes to the referenced plan sheets.

The following revised sheets detail all changes:

Revised Contract Plan Sheet Nos. 594R1, 599R2 and 600R1 (of 1204).

Estimate of Decrease in Contract Item at Contract Price:

Item No. 52: FURNISH STRUCTURAL STEEL (BRIDGE) (TOWER)
-293.4 KG (+0.00%) @ $10.00 /KG = –$2,934.00 (–0.35%)

Item No. 53: ERECT STRUCTURAL STEEL (BRIDGE) (TOWER)
-293.4 KG (+0.00%) @ $1.00 /KG = –$293.40 (–0.35%)

Estimated total cost for Decrease in Contract Item.....($3,227.40)

Adjustment of Compensation at Lump Sum:

The Contractor shall receive and accept the sum of $80,253.00. This sum constitutes full and complete compensation for furnishing all labor, material, tools and incidentals including all markups by reason of this change.

Adjustment of Compensation at Lump Sum $80,253.00

There is no adjustment of contract time for this change.

Total estimated cost of this change order $77,025.60

CONTRACT CHANGE ORDER

Change Requested by: Engineer

CCO: 36	Suppl. No. 0	Contract No. 04 - 0120F4	Road SF-80-13.2/13.9	FED. AID LOC.:

Estimated Cost: Increase ☑ Decrease ☐ $77,025.60

By reason of this order the time of completion will be adjusted as follows: 0 days

Submitted by

Signature	Resident Engineer Mark Woods for Gary Pursell, R.E.	Date 28 July 2008

Approval Recommended by

Signature	Supervising Bridge Engineer Richard Morrow, P.E., Sup. BE	Date 7/28/08

Engineer Approval by

Signature	Supervising Transportation Engineer Gary Pursell, P.E., Sup. TE	Date 7/29/08

We the undersigned contractor, have given careful consideration to the change proposed and agree, if this proposal is approved, that we will provide all equipment, furnish the materials, except as may otherwise be noted above, and perform all services necessary for the work above specified, and will accept as full payment therefor the prices shown above.

NOTE: If you, the contractor, do not sign acceptance of this order, your attention is directed to the requirements of the specifications as to proceeding with the ordered work and filing a written protest within the time therein specified.

Contractor Acceptance by

Signature	(Print name and title)	Date

DIST.	COUNTY	ROUTE	KILOMETER POST TOTAL PROJECT	SHEET NO.	TOTAL SHEETS
04	SF	80	13.2/13.9	594R1	1204

REGISTERED ENGINEER - CIVIL

12-6-04
PLANS APPROVAL DATE

REGISTERED PROFESSIONAL ENGINEER Marwan N. Nader No. C 054426 Exp. 12/31/07 CIVIL STATE OF CALIFORNIA

The State of California or its officers or agents shall not be responsible for the accuracy or completeness of electronic copies of this plan sheet.

T.Y. LIN / MOFFATT & NICHOL
825 BATTERY STREET
SAN FRANCISCO, CA 94111

Caltrans now has a web site! To get to the web site, go to: http://www.dot.ca.gov

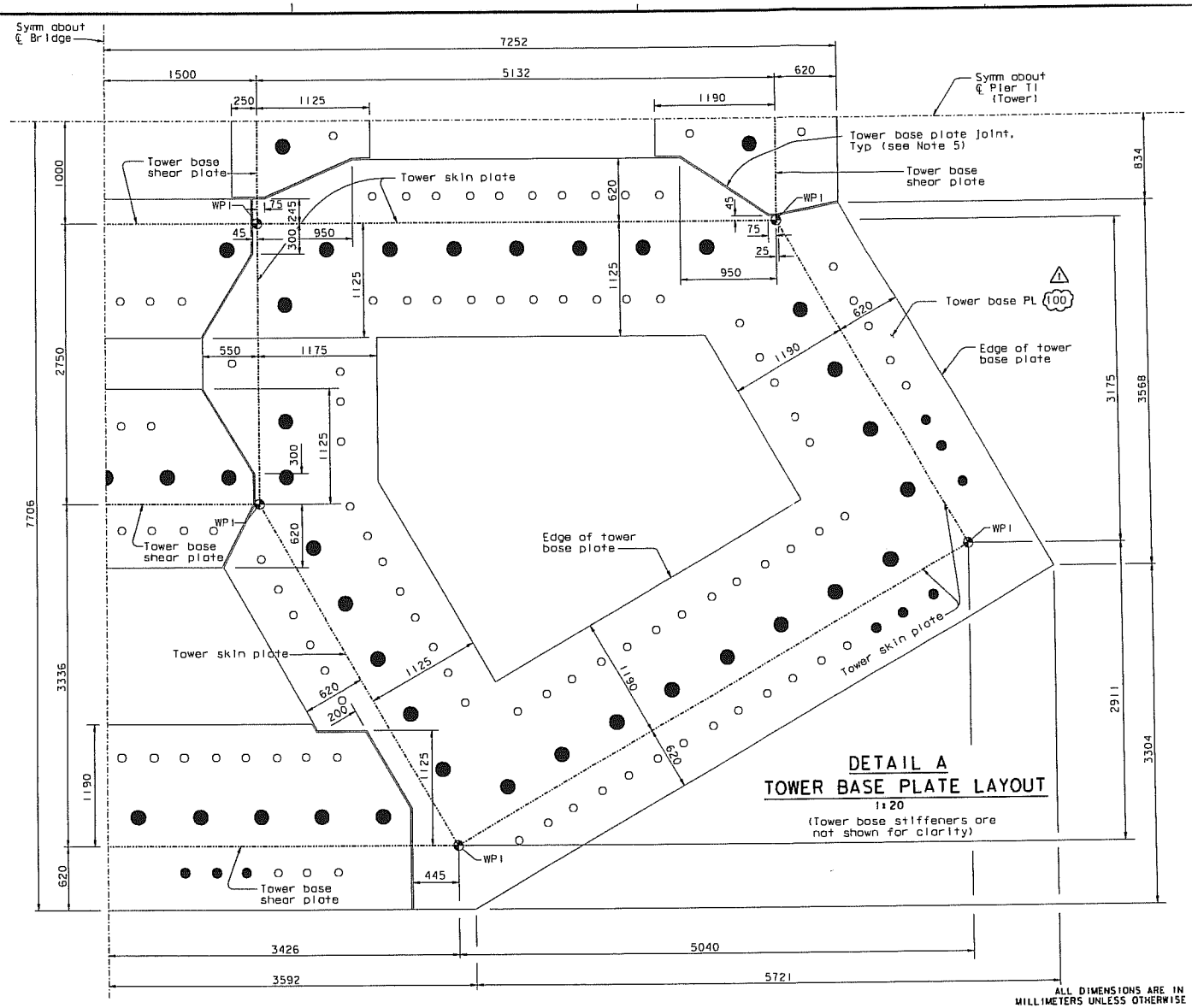

DETAIL A
TOWER BASE PLATE LAYOUT
1:20
(Tower base stiffeners are not shown for clarity)

LEGEND:

- Tower base plate outline
- Edges of tower skin & tower base shear plate outline
- 150 Dia dowel
- 75 Dia anchor bolt
- 100 Dia anchor bolt
- WP1 - Geometric working point @ Elev 3.125 m

MARK	DATE	DESCRIPTIONS	BY	CH'D	CCO#
1	02/28/07	TOWER BASE PLATE	AS	MN	36

REVISIONS

CONTRACT CHANGE ORDER NO. 36
SHEET 3 OF 5

NOTES:

1. For anchor bolts and dowels layout, see "Tower Anchorage Details No. 3" sheet.
2. For tower base stiffener layout, see "Tower Anchorage Details No. 4" sheet.
3. Tower anchorage WP are extrapolated using control cross sections WP shown in "Tower Layout No. 4" sheet. Tower anchorage WP are for information only, and shall not govern the control cross section WP.
4. For anchor bolt hole details, see "Tower Anchorage Details No. 6" sheet. For dowel hole detail, see "Tower Anchorage Details No. 7" sheet.
5. For details of tower base plate joint, see "Tower Anchorage Details No. 8" sheet.

100 % PS&E

ALL DIMENSIONS ARE IN MILLIMETERS UNLESS OTHERWISE SHOWN

SAN FRANCISCO OAKLAND BAY BRIDGE
EAST SPAN SEISMIC SAFETY PROJECT
SELF-ANCHORED SUSPENSION BRIDGE
(SUPERSTRUCTURE & TOWER)

TOWER ANCHORAGE DETAILS NO. 2

R. Vallzadeh/V. Toon/Y.L./W.L./F.C.
DESIGN OVERSIGHT
Roger Vallzadeh / Vern Toon / Y. Liu
SIGN OFF DATE 02/28/07
Rev. Date: 5-15-95

DESIGN	BY M. Nader	CHECKED S. Como	
DETAILS	BY L. Rus	CHECKED S. Como	
QUANTITIES	BY L. Rus	CHECKED Y. Zhang	

PREPARED FOR THE STATE OF CALIFORNIA DEPARTMENT OF TRANSPORTATION

R. Monzanarez
PROJECT ENGINEER

BRIDGE NO. 34-0006L/R
KILOMETER POST 13.2/13.9

CU 04
EA 0120F1

ORIGINAL SCALE IN MILLIMETERS FOR REDUCED PLANS 0 10 20 30 40 50 60 70 80 90 100

DISREGARD PRINTS BEARING EARLIER REVISION DATES

REVISION DATES (PRELIMINARY STAGE ONLY) 01/15/99 05/15/99 08/20/99 09/20/01 04/08/02 02/21/02 12/19/02

SHEET 177R1 OF

FILE => L:\BB\04-012001\SAS\Contract Plans and CCO\CCO\In Progress\CCO#36\aotwa01.dgn

USERNAME => ptom DATE PLOTTED => 19 MAR 2007 TIME PLOTTED => 14:46:51

DIST.	COUNTY	ROUTE	KILOMETER POST TOTAL PROJECT	SHEET NO.	TOTAL SHEETS
04	SF	80	13.2/13.9	599R2	1204

REGISTERED ENGINEER - CIVIL

12-6-04
PLANS APPROVAL DATE

REGISTERED PROFESSIONAL ENGINEER
Marwan N. Nader
No. C 054426
Exp. 12/31/07
CIVIL
STATE OF CALIFORNIA

The State of California or its officers or agents shall not be responsible for the accuracy or completeness of electronic copies of this plan sheet.

T.Y. LIN / MOFFATT & NICHOL
825 BATTERY STREET
SAN FRANCISCO, CA 94111

Caltrans now has a web site! To get to the web site, go to: http://www.dot.ca.gov

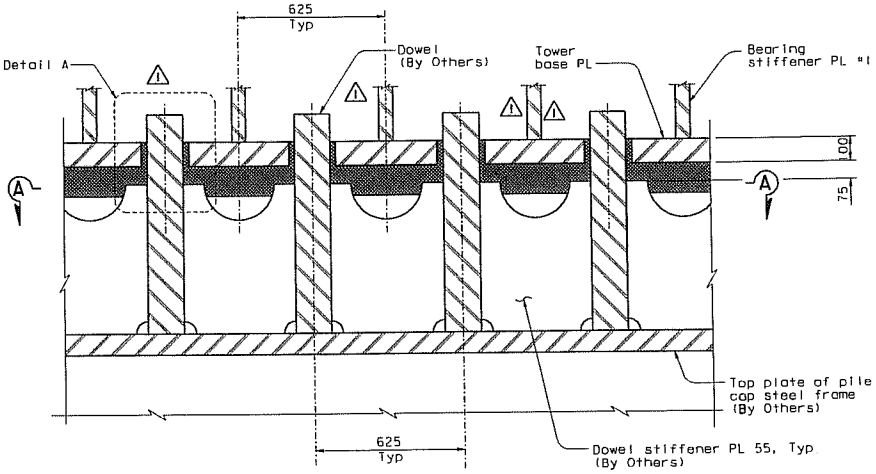

SECTION F-F
1:10
(Section at B shown, others are similar)

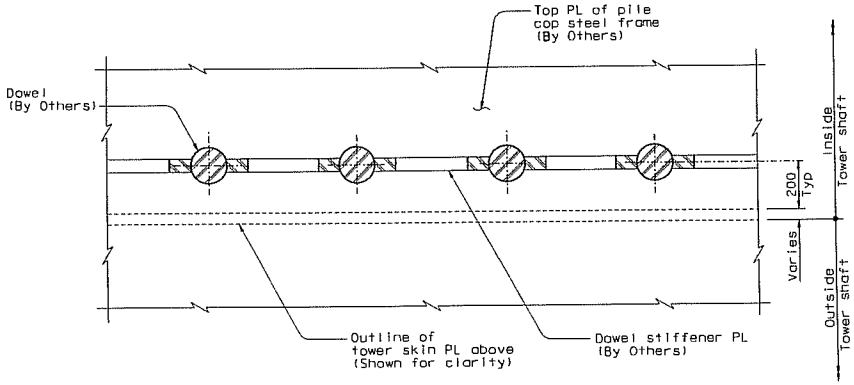

SECTION A-A
1:10

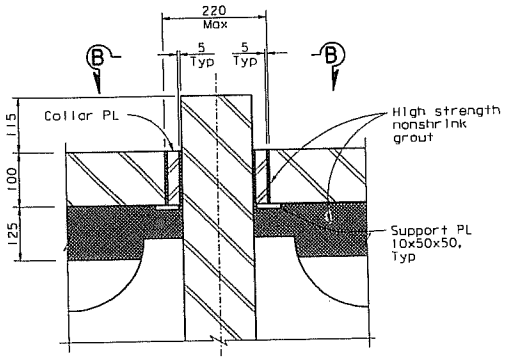

DOWEL ANCHORAGE CONTINGENCY DETAIL (see Note 2)
1:5

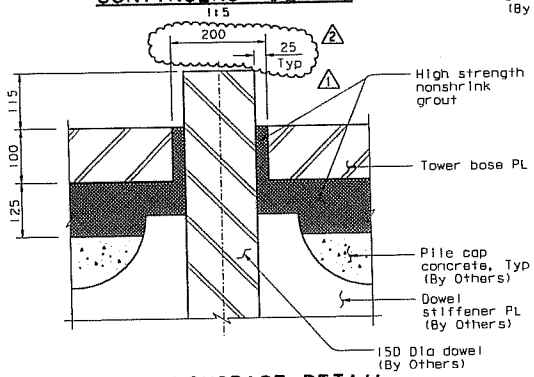

DOWEL ANCHORAGE DETAIL DETAIL A
1:5

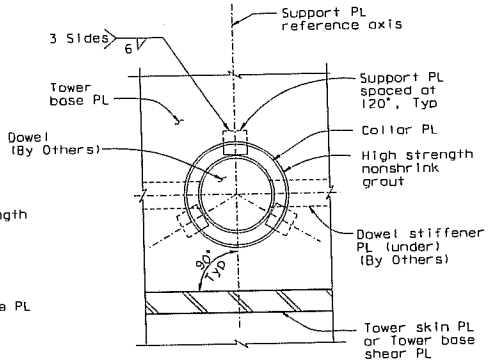

VIEW B-B
1:5

LEGEND:

High strength nonshrink grout (f'c=104 MPa)

NOTES:

1. For dowel layout, see "Tower Anchorage Details No.3" sheet.
2. Oversize hole in tower base PL is an acceptable alternative to accomodate tolerance requirements for the erection of the tower base plate. Collar plates shall be A709M Gr.345 and shall be fabricated based on field measurements and then installed.

MARK	DATE	DESCRIPTIONS	BY	CH'D	CCO#
2	04/03/07	TOWER BASE PLATE	JD	MN	36
1	02/28/07	TOWER BASE PLATE	JD	MN	36

REVISIONS

CONTRACT CHANGE ORDER NO. 36
SHEET 4 OF 5

ALL DIMENSIONS ARE IN MILLIMETERS UNLESS OTHERWISE SHOWN

SAN FRANCISCO OAKLAND BAY BRIDGE
EAST SPAN SEISMIC SAFETY PROJECT
SELF-ANCHORED SUSPENSION BRIDGE
(SUPERSTRUCTURE & TOWER)

TOWER ANCHORAGE DETAILS NO. 7

R. Valizadeh/V. Toan/Y.L./W.L./F.C.
DESIGN OVERSIGHT
Roger Valizadeh / Vann Toan / Y. Lin
SIGN OFF DATE 04/03/07

	BY	CHECKED
DESIGN	M. Nader	S. Camo
DETAILS	L. Rus	S. Camo
QUANTITIES	L. Rus	Y. Zhang

PREPARED FOR THE STATE OF CALIFORNIA DEPARTMENT OF TRANSPORTATION

R. Manzanarez
PROJECT ENGINEER

BRIDGE NO. 34-0006L/R
KILOMETER POST 13.2/13.9

CU 04
EA 0120F1

DISREGARD PRINTS BEARING EARLIER REVISION DATES

REVISION DATES (PRELIMINARY STAGE ONLY)

SHEET 182R2 OF

Rev. Date: 5-18-98

ORIGINAL SCALE IN MILLIMETERS FOR REDUCED PLANS 0 10 20 30 40 50 60 70 80 90 100

FILE => I:\bb\04-012001\sas\contract plans and cco\cco\in progress\cco#36\aetwa05.dgn

100 % PS&E

DATE PLOTTED => 03 APR 2007 TIME PLOTTED => 14:12:37

USERNAME => klo

DIST.	COUNTY	ROUTE	TOTAL PROJECT	NO.	SHEETS
04	SF	80	13.2/13.9	600R1	1204

REGISTERED ENGINEER - CIVIL

12-6-04
PLANS APPROVAL DATE

REGISTERED PROFESSIONAL ENGINEER Marwan N. Nader No. C 054426 Exp. 12/31/07 CIVIL STATE OF CALIFORNIA

The State of California or its officers or agents shall not be responsible for the accuracy or completeness of electronic copies of this plan sheet.

T.Y. LIN / MOFFATT & NICHOL
825 BATTERY STREET
SAN FRANCISCO, CA 94111

To get to the web site, go to: http://www.dot.ca.gov

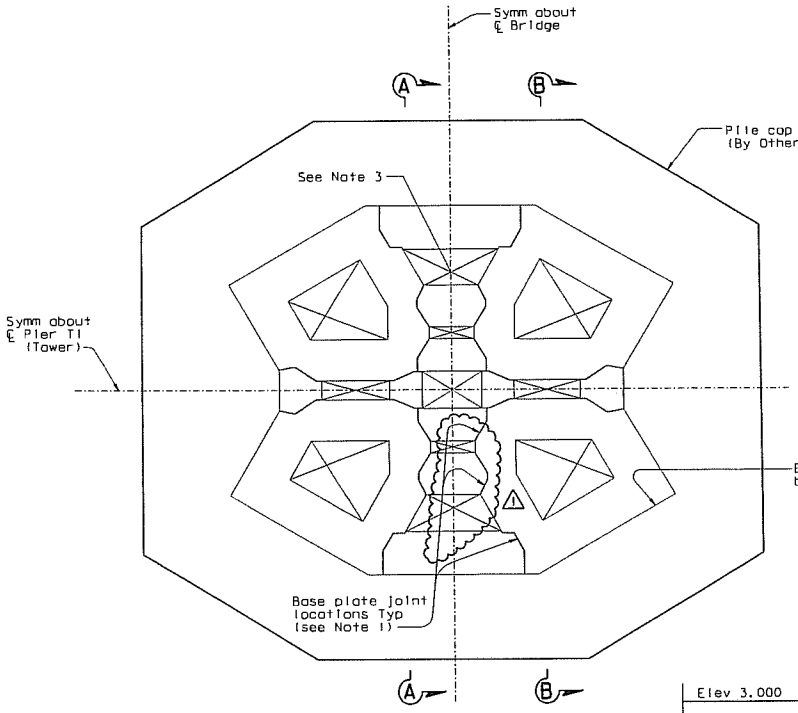

TOWER BASE ASSEMBLY PLAN
1:100

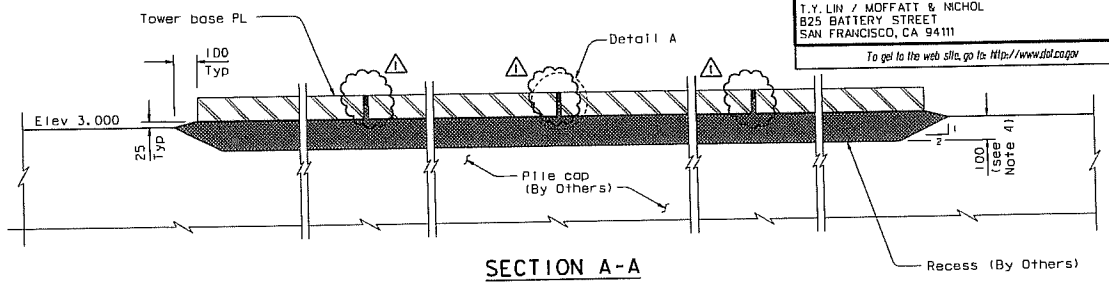

SECTION A-A
1:10

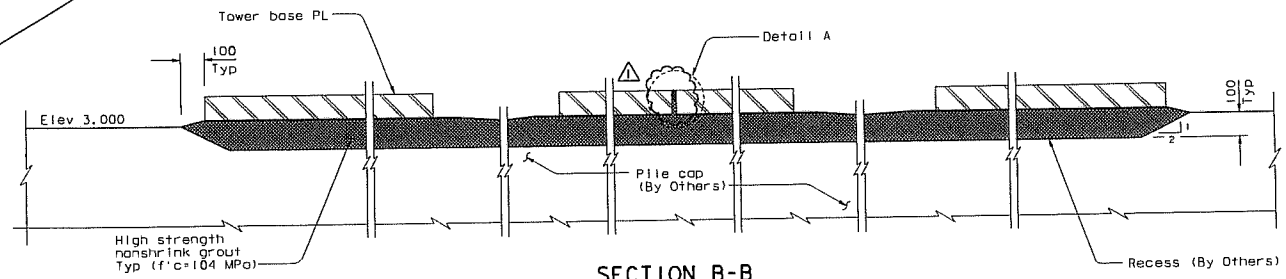

SECTION B-B
1:10

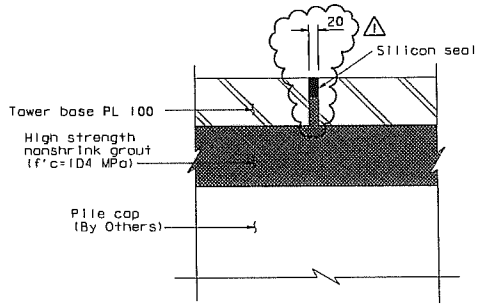

DETAIL A
1:5

NOTES:

1. For layout of tower base plate joint, see "Tower Anchorage Details No. 2" sheet. The Contractor may provide an alternative layout subject to the review and approval of the Engineer.
2. Base plates under each tower shaft and each shear plate shall be single plates or shall be built up from pieces by CJP welds done in the shop.
3. For tower drainage, see "Tower Drainage Details" sheets.
4. The Contractor may vary the depth of grout in order to achieve specified tolerances, provided there is positive flow towards the drains and the elevation of the top of the tower base plate is higher than the top of the drain.

MARK	DATE	DESCRIPTIONS	BY	CH'D	CCO#
1	02/28/07	TOWER BASE PLATE	AS	MN	36

REVISIONS

CONTRACT CHANGE ORDER NO. 36
SHEET 5 OF 5

ALL DIMENSIONS ARE IN MILLIMETERS UNLESS OTHERWISE SHOWN

SAN FRANCISCO OAKLAND BAY BRIDGE
EAST SPAN SEISMIC SAFETY PROJECT
SELF-ANCHORED SUSPENSION BRIDGE (SUPERSTRUCTURE & TOWER)

TOWER ANCHORAGE DETAILS NO. 8

R. Vallizadeh/V. Toon/Y.L./W.L./F.C.
DESIGN OVERSIGHT
SIGN OFF DATE 02/28/07
Rev. Date: 5-18-98

DESIGN	BY M. Nader	CHECKED S. Como	
DETAILS	BY L. Rus	CHECKED S. Como	
QUANTITIES	BY L. Rus	CHECKED Y. Zhang	

PREPARED FOR THE STATE OF CALIFORNIA DEPARTMENT OF TRANSPORTATION

R. Manzanarez
PROJECT ENGINEER

BRIDGE NO. 34-0006L/R
KILOMETER POST 13.2/13.9

ORIGINAL SCALE IN MILLIMETERS FOR REDUCED PLANS 0 10 20 30 40 50 60 70 80 90 100

CU 04
EA 0120F1

DISREGARD PRINTS BEARING EARLIER REVISION DATES 10/31/01 10/30/02 11/30/03 12/15/03

REVISION DATES (PRELIMINARY STAGE ONLY)

SHEET 183R1 OF

FILE => I:\bb\04-0120f1\bas\contract plans and cco\cco\in progress\cco#36\cbtwa07.dgn

USERNAME => ofilsonsky DATE PLOTTED => 16 MAR 2007 TIME PLOTTED => 08:12:38

100 % PS&E

STATE OF CALIFORNIA - DEPARTMENT OF TRANSPORTATION

CONTRACT CHANGE ORDER MEMORANDUM

DATE: 7/28/2008 Page 1 of 1

TO: Mike Forner, Prin. TE / Gary Pursell, P.E., Sup T.E.	FILE: E.A. 04 - 0120F4
FROM: Gary Pursell, P.E., Sup.T.E.	CO-RTE-PM SF-80-13.2/13.9
	FED. NO.
CCO#: 36 SUPPLEMENT#: 0 Category Code: ~~CHPA~~ CHPR	CONTINGENCY BALANCE (incl. this change) $133,875,978.40
COST: $77,025.60 INCREASE ☑ DECREASE ☐	HEADQUARTERS APPROVAL REQUIRED? ☐ YES ☑ NO
SUPPLEMENTAL FUNDS PROVIDED: $0.00	IS THIS REQUEST IN ACCORDANCE WITH ENVIRONMENTAL DOCUMENTS? ☑ YES ☐ NO
CCO DESCRIPTION: Tower Base Plate and RFI Cleanup	**PROJECT DESCRIPTION:** CONSTRUCT SELF-ANCHORED SUSPENSION BRIDGE

Original Contract Time:	Time Adj. This Change:	Previously Approved CCO Time Adjustments:	Percentage Time Adjusted: (including this change)	Total # of Unreconciled Deferred Time CCO(s): (including this change)
2490 Day(s)	0 Day(s)	30 Day(s)	1 %	2

THIS CHANGE ORDER PROVIDES FOR:

Increasing the tower base dowel anchorage diameter, enlarging the space between base plates, and compensating the Contractor for revising previously approved shop drawings.

This change order reduces risk to both the Department and the Contractor during the tower erection procedure by allowing a greater tolerance in the anchorage details. This change resolves and is in response to Contractor RFIs 25, 34 and 390R1.

This work will be done by decreasing Contract Item 52 "Furnish Structural Steel, (Bridge) (Tower)," and Contract Item 53, "Erect Structural Steel (Bridge) (Tower)," for a net decrease of <$3,227.40>. The Contractor will also be paid a lump sum of $80,253.00 for the additional milling of the holes and detailing costs, totaling $77,025.60 for this change, which can be financed from the contingency fund. A detailed cost analysis is in the project files.

No adjustment of contract time is warranted, as this change does not affect the controlling operation.

This change order shall be executed unilaterally due to the Contractor returning it unsigned. Refer to attached ABFJV letter dated 7/11/2008. The Department disagrees with the Contractor's contention that the change order should include time deferment.

This change order was approved by the Engineer on 7/29/2008.

CONCURRED BY:

Construction Engineer:	Res. Eng., Gary Pursell, Sup. TE	Date	3/14/07
Bridge Engineer:	Struct Rep, Rick Morrow, Sup TE	Date	3/14/07
Project Engineer:	CT Oversight, Reza Valizadeh, P.E	Date	3/21/07
Project Manager:	Proj Manager, Ken Terpstra	Date	9/2/07
FHWA Rep.:		Date	
Environmental:		Date	
Other (specify):	Design of Record, Marwan Nader,	Date	3/15/07
Other (specify):	Struct Maint, Bill Zanetich, P.E.	Date	3/21/07
District Prior Approval By:		Date	
HQ (Issue Approve) By:		Date	
Resident Engineer's Signature:	Gary Pursell	Date	7/29/08

ESTIMATE OF COST

	THIS REQUEST	TOTAL TO DATE
ITEMS	($3,227.40)	($3,227.40)
FORCE ACCOUNT	$0.00	$0.00
AGREED PRICE	$0.00	$0.00
ADJUSTMENT	$80,253.00	$80,253.00
TOTAL	$77,025.60	$77,025.60

FEDERAL PARTICIPATION

☐ PARTICIPATING ☐ PARTICIPATING IN PART ☑ NONE
☐ NON-PARTICIPATING (MAINTENANCE) ☐ NON-PARTICIPATING

FEDERAL SEGREGATION (if more than one Funding Source or P.I.P. type)
☐ CCO FUNDED PER CONTRACT ☐ CCO FUNDED AS FOLLOWS

FEDERAL FUNDING SOURCE	PERCENT

ADA Notice: For individuals with sensory disabilities, this document is available in alternate formats. For information call: (916) 654-6410 or TDD (916) 654-3880 or write Records and Forms Management, 1120 N Street, MS-89, Sacramento, CA 95814.

CONTRACT CHANGE ORDER

Change Requested by: Engineer

CCO: 36 **Suppl. No. 1** **Contract No. 04 – 0120F4** **Road** SF-80-13.2/13.9 **FED. AID LOC.:**

To: **AMERICAN BRIDGE/FLUOR ENTERPRISES INC A JOINT VENTURE**

You are directed to make the following changes from the plans and specifications or do the following described work not included in the plans and specifications for this contract. ***NOTE: This change order is not effective until approved by the Engineer.***

Description of work to be done, estimate of quantities and prices to be paid. (Segregate between additional work at contract price, agreed price and force account.) Unless otherwise stated, rates for rental of equipment cover only such time as equipment is actually used and no allowance will be made for idle time. This last percentage shown is the net accumulated increase or decrease from the original quantity in the Engineer's Estimate.

Adjustment of Compensation at Lump Sum:

Modify Tower base plate and anchor rod grouting including, but not limited to, the following:

1) Provide grout tight seal and fill oversized dowel holes with 104 MPa epoxy grout
2) Provide a grout tight seal around the anchor bolt pipe sleeves
3) Revise high strength grouting specifications
4) Increase grout pad thickness under Tower skirt base plate
5) Remove plastic alignment bolts
6) Provide a spare 120 mm plate
7) Additional work to perform Tower base plate grout mock-up to simulate the sleeves and seals between the base plate and T1 foundation

Revise Special Provisions Section 10-1.56, "HIGH STRENGTH NONSHRINK GROUT," subsection "WORKING DRAWINGS," Item E as shown on sheet two (2) of this change order.

Revise Special Provisions Section 10-1.56, "HIGH STRENGTH NONSHRINK GROUT," subsection "MATERIALS," first and third paragraphs as shown on sheet two (2) of this change order.

The following revised and supplemental plan sheets detail the changes addressed in this change order: 598R3, 598S1, 599R3, 600R2, and 604R1 (of 1204) as shown on sheets 3 through 7 of this change order.

This change order resolves the costs associated with Contractor Request For Information (RFI) numbers 34R0, 34R1, 34R2, 34R3, 653R1, 966R0, 966R2, 966R4, 973R1, 1071, and 1129 with respect to changes listed above.

For this work, the Contractor will receive a lump sum price of $204,949.00. This sum constitutes full and complete compensation for furnishing all labor, material, tools and incidentals including all markups by reason of this change.

Adjustment of Compensation at Lump Sum.....$204,949.00

Estimated Cost: Increase ☒ Decrease ☐ $204,949.00

By reason of this order the time of completion will be adjusted as follows: 0 days

Submitted by

Signature	Resident Engineer	Date
[signature]	Mark Woods, Senior B.E.	22 Sept 2010

Approval Recommended by

Signature	Supervising Bridge Engineer	Date
[signature]	Richard Morrow, Sup. B.E.	9/22/10

Engineer Approval by

Signature	Principal Transportation Engineer	Date
Pete Siegenthaler	Peter Siegenthaler, Prin. T.E.	9/30/10

We the undersigned contractor, have given careful consideration to the change proposed and agree, if this proposal is approved, that we will provide all equipment, furnish the materials, except as otherwise be noted above, and perform all services necessary for the work above specified, and will accept as full payment therefor the prices shown above.

NOTE: If you, the contractor, do not sign acceptance of this order, your attention is directed to the requirements of the specifications as to proceeding with the ordered work and filing a written protest within the time therein specified.

Contractor Acceptance by

Signature	(Print name and title)	Date
[signature]	Pieter Waart van Gulik, Deputy Project Director	9/29/10

STATE OF CALIFORNIA
DEPARTMENT OF TRANSPORTATION

HC-5 (Rev. 5/93)

CONTRACT CHANGE ORDER NO. 36 SUPPL. NO. 1

ROAD 04-SF-80-13.2, 13.9 SHEET 2 OF 7 SHEETS
FEDERAL NO.(S) CONTRACT NO.: **04-0120F4**

SPECIAL PROVISIONS:

1. In the Special Provisions, Section 10-1.56, "HIGH STRENGTH NONSHRINK GROUT," subsection "WORKING DRAWINGS," Item E is revised as follows:

   "E. High strength nonshrink grout mix design (mix design not required for proprietary pre-packaged high strength nonshrink grouts)."

2. In the Special Provisions, Section 10-1.56, " HIGH STRENGTH NONSHRINK GROUT," subsection "MATERIALS," the first paragraph is revised as follows:

   "Grout shall be high strength, nonshrink grout and shall be a nonmetallic and non-gas-forming flowable or fluid grout containing natural aggregate, portland cement and additives and requiring only the addition of water. ~~Grout shall contain a minimum of 390 kg of cement per cubic meter.~~ Grout shall be pre-measured and prepackaged by the manufacturer, and shall be suitable for baseplate and foundation grouting. Aggregate shall show no segregation or settlement at fluid consistency at specified times or temperatures. One hour after mixing, the grout shall pass through a flow cone with continuous flow. Grout shall conform to the requirements of ASTM Designation: C1107~~, Grade C~~ / C1107M-07a, and the following additional requirements:

Property	Requirement	Test
Shrinkage	0.0%	ASTM C827
Expansion	0.0%min., 4.0% max.	ASTM C827
Fluid Consistency (fluid grout)	20-30 seconds at 5°C to 38°C	~~CORPS-CRD-611-81~~ ASTM C939
Flowable Consistency (flowable grout)	125-145% flow after 5 drops of the table in 3 seconds	ASTM C1437
1 day compressive strength	24 MPa	ASTM C109
3 day compressive strength	35 MPa	ASTM C109
~~28~~ 56 day compressive strength	60 MPa	ASTM C109

."

3. In the Special Provisions, Section 10-1.56, " HIGH STRENGTH NONSHRINK GROUT," subsection "MATERIALS," the third paragraph is revised as follows:

   "Grout shall be formulated for minimum initial set time of 4 hours and minimum final set time of 6 hours at 21°C. Prior to use, the materials shall be stored in a cool, dry environment. Grout shall be free from chlorides and other corrosion-causing chemicals. ~~Grout shall be designed for an air content of 4 2 to 6 percent~~."

STATE OF CALIFORNIA - DEPARTMENT OF TRANSPORTATION

CONTRACT CHANGE ORDER MEMORANDUM

TO: Pete Siegenthaler, Prin TE /	FILE: **E.A.** 04 - 0120F4
FROM: Kannu Balan, Senior TE	**CO-RTE-PM** SF-80-13.2/13.9
	FED. NO.
CCO#: **36** SUPPLEMENT#: **1** Category Code: **CHSA**	CONTINGENCY BALANCE (incl. this change) **$64,042,703.81**
COST: **$204,949.00** INCREASE ☑ DECREASE ☐	HEADQUARTERS APPROVAL REQUIRED? ☑ YES ☐ NO
SUPPLEMENTAL FUNDS PROVIDED: **$0.00**	IS THIS REQUEST IN ACCORDANCE WITH ENVIRONMENTAL DOCUMENTS? ☑ YES ☐ NO
CCO DESCRIPTION: Grout at Base Plate	**PROJECT DESCRIPTION:** CONSTRUCT SELF-ANCHORED SUSPENSION BRIDGE

Original Contract Time:	Time Adj. This Change:	Previously Approved CCO Time Adjustments:	Percentage Time Adjusted: (including this change)	Total # of Unreconciled Deferred Time CCO(s): (including this change)
2490 Day(s)	**0** Day(s)	**227** Day(s)	**9** %	**6**

THIS CHANGE ORDER PROVIDES FOR:

Revising Special Provisions Section 10-1.56, "HIGH STRENGTH NONSHRINK GROUT," subsection "MATERIALS," first and third paragraphs.

To facilitate installation of the Tower base over the dowels, the holes sizes were increased and will need to be filled with epoxy. An existing bond breaker allows grouting of the pipe sleeves prior to stressing the anchor bolts, provided that a grout tight seal around the sleeves separates the grouting operation from the bolts. High strength non-shrink grout specifications have been revised based upon recommendations from grout manufacturers. The grout pad thickness was increased to adjust for as-built conditions and to properly fit-up the fabricated structure. The Pier T1 Foundation Contractor added plastic alignment bolts to the pipe sleeves in order to properly align the anchor bolts, the SAS Contractor will remove these bolts during the grouting operation.

This change order resolves the costs associated with Contractor Request For Information (RFI) numbers 34R0, 34R1, 34R2, 34R3, 653R1, 966R0, 966R2, 966R4, 973R1, 1071, and 1129 with respect to changes listed above.

The cost of this supplemental change is $204,949.00, which can be financed from the contingency fund. This will result in a cumulative amount of $281,974.60 for CCO 36S0 and 36S1. A detailed cost estimate is on file.

CCO 36S0 was approved unilaterally, for the Contractor agreed with the cost, but did not agree with a no-time adjustment. No time adjustment is warranted for CCO 36S1 as this change order does not affect the controlling operation.

This change order has concurrence from Mike Forner (Principal Construction Engineer), Rick Morrow (Structure Representative), Marwan Nader (Designer of Record), Gary Pursell (Resident Engineer), Wenyi Long (OSCM Oversight), Lina Ellis (Maintenance), Ken Terpstra (Project Manager), and Rich Foley (HQ Oversight).

The Resident Engineer requests Head Quarters CCO Desk "Issue and Approve".

ADA Notice: For individuals with sensory disabilities, this document is available in alternate formats. For information call: (916) 654-6410 or TDD (916) 654-3880 or write Records and Forms Management, 1120 N Street, MS-89, Sacramento, CA 95814.

CONCURRED BY:			
Construction Engineer:	Res. Eng., Gary Pursell, Sup. TE	Date	6/26/08
Bridge Engineer:	Struct Rep, Rick Morrow, Sup TE	Date	6/27/08
Project Engineer:	CT Oversight, Wenyi Long, P.E.	Date	10/29/08
Project Manager:	Proj Manager, Ken Terpstra	Date	12/10/08
FHWA Rep.:	Struct. Maint, Lina Ellis	Date	10/29/08
Environmental:		Date	
Other (specify):	PCE, Michael Forner	Date	6/30/08
Other (specify):	HQ, Rich Foley	Date	9/3/10
District Prior Approval By:	HQ Bob Molera	Date	1/8/09
HQ (Issue Approve) By:		Date	
Resident Engineer's Signature:		Date	9-22-10

ESTIMATE OF COST

	THIS REQUEST	TOTAL TO DATE
ITEMS	$0.00	($3,227.40)
FORCE ACCOUNT	$0.00	$0.00
AGREED PRICE	$0.00	$0.00
ADJUSTMENT	$204,949.00	$285,202.00
TOTAL	$204,949.00	$281,974.60

FEDERAL PARTICIPATION

☐ PARTICIPATING ☐ PARTICIPATING IN PART ☑ NONE
☐ NON-PARTICIPATING (MAINTENANCE) ☐ NON-PARTICIPATING

FEDERAL SEGREGATION (if more than one Funding Source or P.I.P. type)
☐ CCO FUNDED PER CONTRACT ☐ CCO FUNDED AS FOLLOWS

FEDERAL FUNDING SOURCE	PERCENT

ADA Notice: For individuals with sensory disabilities, this document is available in alternate formats. For information call: (916) 654-6410 or TDD (916) 654-3880 or write Records and Forms Management, 1120 N Street, MS-89, Sacramento, CA 95814.

DIST.	COUNTY	ROUTE	KILOMETER POST TOTAL PROJECT	SHEET NO.	TOTAL SHEETS
04	SF	80	13.2/13.9	598R3	1204

REGISTERED ENGINEER - CIVIL

12-6-04
PLANS APPROVAL DATE

PROFESSIONAL ENGINEER — Marwan N. Nader — No. C 054426 — Exp. 12/31/09 — CIVIL — STATE OF CALIFORNIA

The State of California or its officers or agents shall not be responsible for the accuracy or completeness of electronic copies of this plan sheet.

T.Y. LIN / MOFFATT & NICHOL
825 BATTERY STREET
SAN FRANCISCO, CA 94111

Caltrans now has a web site! To get to the web site, go to: http://www.dot.ca.gov

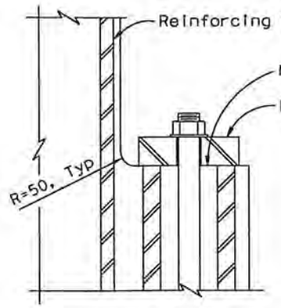

DETAIL B
1:10

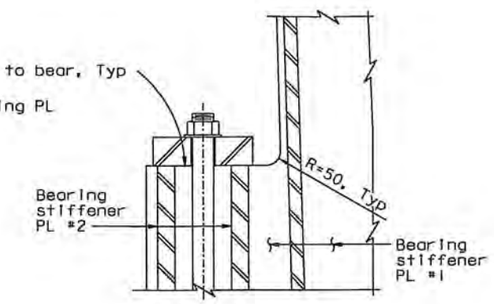

DETAIL C
1:10

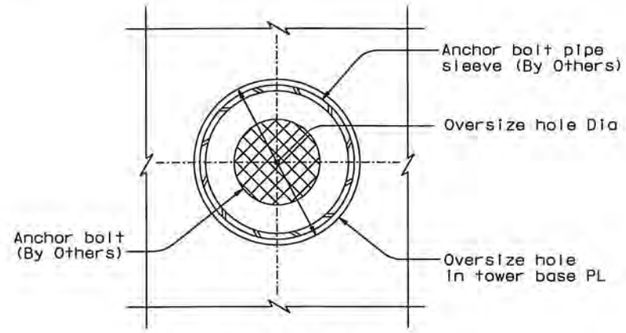

AT TOWER BASE PLATE

ANCHOR BOLT HOLE PLAN VIEW
1:2.5

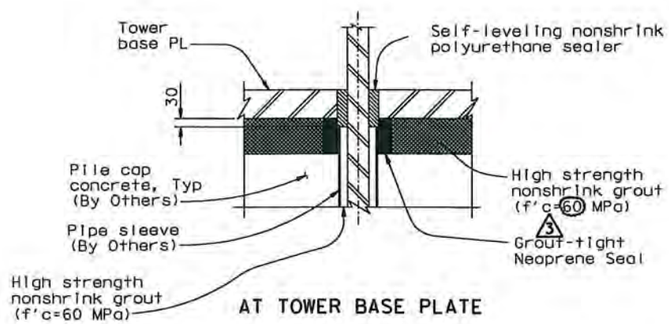

AT TOWER BASE PLATE

ANCHOR BOLT ELEVATION VIEW
1:10

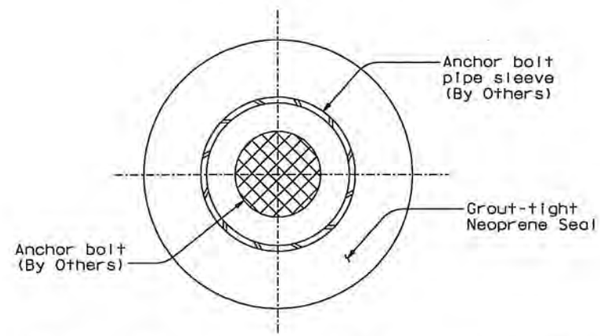

GROUT-TIGHT NEOPRENE SEAL PLAN VIEW (see Note 3)
NTS

REQUESTS FOR INFORMATION NOT ADDRESSED IN THIS CCO REMAIN IN FORCE					
3	08/29/08	TOWER ANCHORAGE BASE PLATE GROUT	JD	MN	36S1
2	02/28/07	TOWER BASE PLATE	JD	MN	36
1	06/23/06	DELETE GAP TABLES	MN	NV	21
MARK	DATE	DESCRIPTIONS	BY	CH'D	CCO#
		REVISIONS			

CONTRACT CHANGE ORDER NO. 36S1
SHEET 3 OF 7

Anchor Bolt Dia	75	100
Oversize hole Dia	145	170

LEGEND:

- High strength nonshrink grout (f'c=60 MPa) 3
- High strength nonshrink grout (f'c=60 MPa)
- Self-leveling nonshrink polyurethane sealer

NOTES:

1. Anchor bolt pipe sleeve shall be filled with nonshrink grout. For additional prestressing details, see "Prestressing Notes" sheet.
2. The Contractor shall develop a scheme for grouting the anchor bolts and submit for review and approval by the Engineer.
3. Grout-tight neoprene seal shown is schematic and is for information only. The seal shall prevent any high strength nonshrink grout from seeping inside the anchor bolt pipe sleeves during grouting of the tower base plate. This is necessary for proper stressing of the anchor bolts. Once final stressing of the anchor bolts is complete, the pipe sleeves shall be grouted (see Note 2). The Contractor shall submit seal details consistent with his means and methods to the Engineer for review and approval. 3 At the Contractor's option, an alternate grouting/stressing procedure may be submitted to the Engineer for review and approval.

ALL DIMENSIONS ARE IN MILLIMETERS UNLESS OTHERWISE SHOWN

R. Vallizadeh/V. Toan/Y.L./W.L./F.C.
DESIGN OVERSIGHT
Y. Liu
SIGN OFF DATE 08/29/08

	BY	CHECKED
DESIGN	M. Nader	S. Camo
DETAILS	L. Rus	S. Camo
QUANTITIES	L. Rus	Y. Zhang

PREPARED FOR THE STATE OF CALIFORNIA DEPARTMENT OF TRANSPORTATION

R. Manzanarez
PROJECT ENGINEER

BRIDGE NO. 34-0006L/R
KILOMETER POST 13.2/13.9

SAN FRANCISCO OAKLAND BAY BRIDGE
EAST SPAN SEISMIC SAFETY PROJECT
SELF-ANCHORED SUSPENSION BRIDGE (SUPERSTRUCTURE & TOWER)

TOWER ANCHORAGE DETAILS NO. 6

Rev. Date: 5-18-98

ORIGINAL SCALE IN MILLIMETERS FOR REDUCED PLANS 0 10 20 30 40 50 60 70 80 90 100

CU 04
EA 0120F1

DISREGARD PRINTS BEARING EARLIER REVISION DATES → 04/09/02 01/07/02 12/14/02 07/18/03

REVISION DATES (PRELIMINARY STAGE ONLY)

SHEET 181R3 OF

FILE => I:\bb\04-012001\sas\contract plans and cco\cco\in progress\cco#36s1\revised 8-29-08 option b\dgn\aatwa06.dgn

USERNAME => dwinrow DATE PLOTTED => 11 SEP 2008 TIME PLOTTED => 16:06:07

100% PS&E

DIST.	COUNTY	ROUTE	KILOMETER POST TOTAL PROJECT	SHEET NO.	TOTAL SHEETS
04	SF	80	13.2/13.9	598S1	1204

REGISTERED ENGINEER - CIVIL

08-29-08

PLANS APPROVAL DATE

REGISTERED PROFESSIONAL ENGINEER Marwan N. Nader No. C 054426 Exp. 12/31/09 CIVIL STATE OF CALIFORNIA

The State of California or its officers or agents shall not be responsible for the accuracy or completeness of electronic copies of this plan sheet.

T.Y. LIN / MOFFATT & NICHOL
825 BATTERY STREET
SAN FRANCISCO, CA 94111

Caltrans now has a web site! To get to the web site, go to: http://www.dot.ca.gov

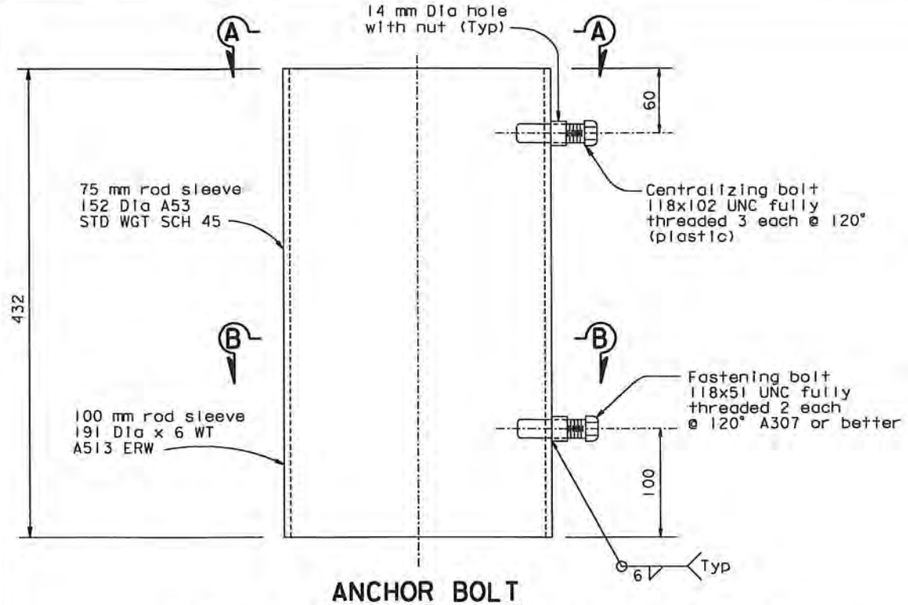

ANCHOR BOLT
PIPE SLEEVE EXTENSION DETAIL (see Note 1) (Elevation View)

NTS (By Others)

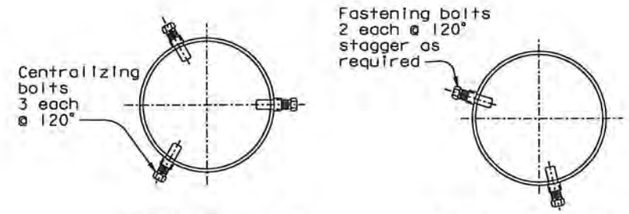

SECTION A-A SECTION B-B

ANCHOR BOLT PIPE SLEEVE EXTENSION DETAIL

NTS (By Others)

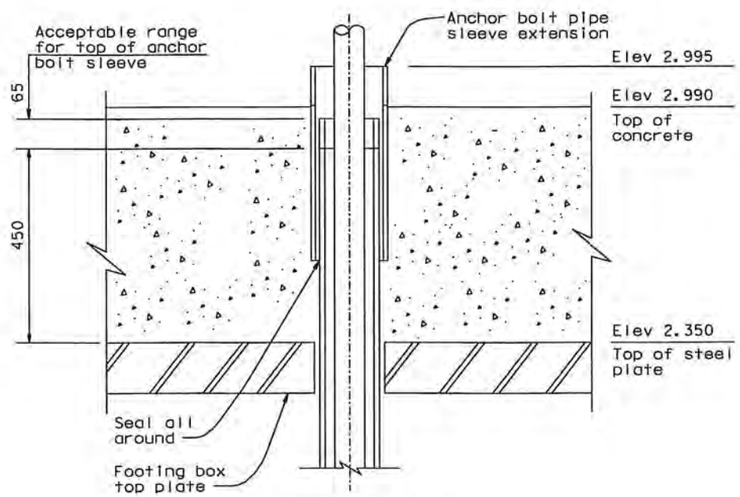

ANCHOR BOLT
PIPE SLEEVE EXTENSION SCHEMATIC

NTS (By Others)

REQUESTS FOR INFORMATION NOT ADDRESSED IN THIS CCO REMAIN IN FORCE					
0	08/29/08	TOWER ANCHORAGE BASE PLATE GROUT	JD	MN	36S1
MARK	DATE	DESCRIPTIONS	BY	CH'D	CCO#
REVISIONS					

CONTRACT CHANGE ORDER NO. 36S1
SHEET 4 OF 7

NOTES:

1. Pipe sleeve extensions are galvanized per ASTM A123.

ALL DIMENSIONS ARE IN MILLIMETERS UNLESS OTHERWISE SHOWN

SAN FRANCISCO OAKLAND BAY BRIDGE
EAST SPAN SEISMIC SAFETY PROJECT
SELF-ANCHORED SUSPENSION BRIDGE
(SUPERSTRUCTURE & TOWER)

TOWER ANCHORAGE DETAILS NO. 6A

R. Vallzadeh/V. Toan/Y.L./W.L./F.C.
DESIGN OVERSIGHT
SIGN OFF DATE 08/29/08

Rev. Date: 5-18-98

	BY	CHECKED
DESIGN	J. Duxbury	M. Nader
DETAILS	J. Duxbury	M. Nader
QUANTITIES	J. Duxbury	M. Nader

PREPARED FOR THE STATE OF CALIFORNIA DEPARTMENT OF TRANSPORTATION

R. Manzanarez
PROJECT ENGINEER

BRIDGE NO. 34-0006L/R
KILOMETER POST 13.2/13.9

CU 04
EA 0120F1

DISREGARD PRINTS BEARING EARLIER REVISION DATES

REVISION DATES (PRELIMINARY STAGE ONLY) 08/29/08

SHEET 181S1 OF

ORIGINAL SCALE IN MILLIMETERS FOR REDUCED PLANS 0 10 20 30 40 50 60 70 80 90 100

FILE => I:\bb\04-01200\sas\contract plans and cco\cco\in progress\cco#36s1\revised 8-29-08 option a\dgn\aetwa06a.dgn

100 % PS&E

USERNAME => dwinrow DATE PLOTTED => 12 SEP 2008 TIME PLOTTED => 08:53:26

DIST.	COUNTY	ROUTE	KILOMETER POST TOTAL PROJECT	SHEET NO.	TOTAL SHEETS
04	SF	80	13.2/13.9	599R3	1204

REGISTERED ENGINEER - CIVIL

12-6-04
PLANS APPROVAL DATE

REGISTERED PROFESSIONAL ENGINEER Marwan N. Nader No. C 054426 Exp. 12/31/09 CIVIL STATE OF CALIFORNIA

The State of California or its officers or agents shall not be responsible for the accuracy or completeness of electronic copies of this plan sheet.

T.Y. LIN / MOFFATT & NICHOL
825 BATTERY STREET
SAN FRANCISCO, CA 94111

Caltrans now has a web site! To get to the web site, go to: http://www.dot.ca.gov

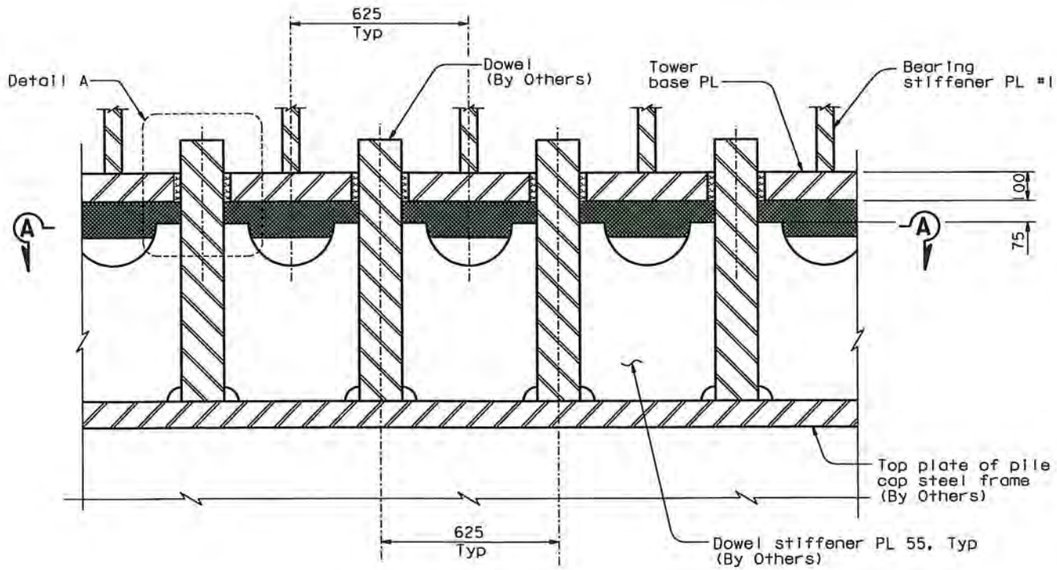

SECTION F-F
1:10
(Section at B shown, others are similar)

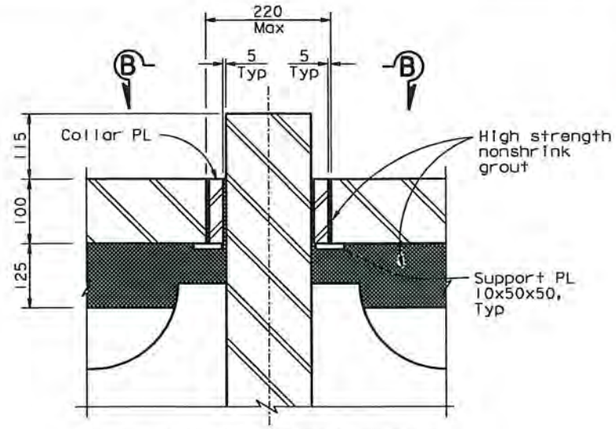

DOWEL ANCHORAGE CONTINGENCY DETAIL (see Note 2)
1:5

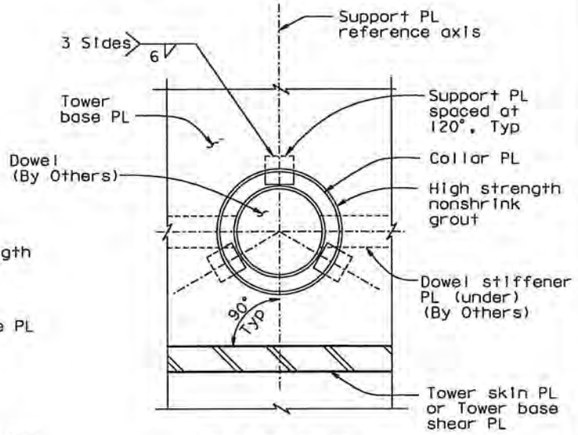

VIEW B-B
1:5

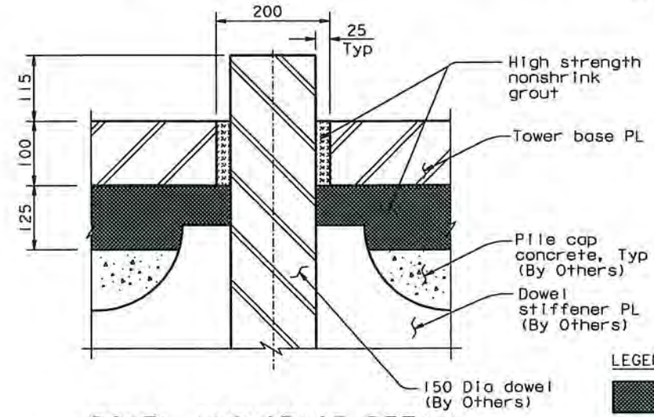

DOWEL ANCHORAGE DETAIL
DETAIL A (See Note 4) 3
1:5

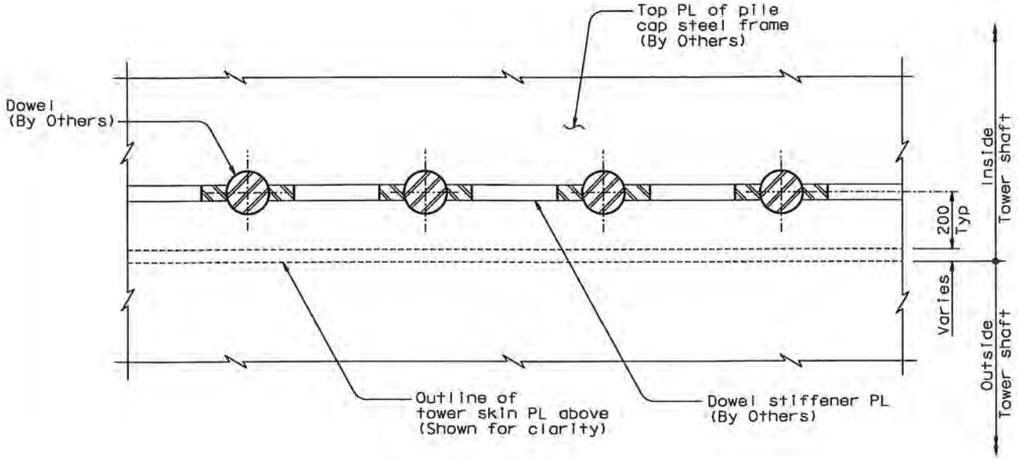

SECTION A-A
1:10

LEGEND:

High strength nonshrink grout (f'c=60 MPa) 3

3 High strength nonshrink grout (f'c=104 MPa) (see Note 3)

NOTES:

1. For dowel layout, see "Tower Anchorage Details No.3" sheet.
2. Oversize hole in tower base PL is an acceptable alternative to accomodate tolerance requirements for the erection of the tower base plate. Collar plates shall be A709M Gr.345 and shall be fabricated based on field measurements and then installed.
3. The Contractor shall recommend an epoxy grout based on manufacturer's recommendations, subject to review and approval of the Engineer. 3
4. The Contractor may submit alternate dowel anchorage details to suit his erection means and methods, subject to review and approval of the Engineer.

REQUESTS FOR INFORMATION NOT ADDRESSED IN THIS CCO REMAIN IN FORCE					
3	08/29/08	TOWER ANCHORAGE BASE PLATE GROUT	JD	MN	36S1
2	04/03/07	TOWER BASE PLATE	JD	MN	36
1	02/28/07	TOWER BASE PLATE	JD	MN	36
MARK	DATE	DESCRIPTIONS	BY	CH'D	CCO#
REVISIONS					

CONTRACT CHANGE ORDER NO. 36S1
SHEET 5 OF 7

ALL DIMENSIONS ARE IN MILLIMETERS UNLESS OTHERWISE SHOWN

100 % PS&E

SAN FRANCISCO OAKLAND BAY BRIDGE
EAST SPAN SEISMIC SAFETY PROJECT
SELF-ANCHORED SUSPENSION BRIDGE
(SUPERSTRUCTURE & TOWER)

TOWER ANCHORAGE DETAILS NO. 7

R. Valizadeh/V. Toan/Y.L./W.L./F.C.
DESIGN OVERSIGHT
SIGN OFF DATE 08/29/08

	BY	CHECKED
DESIGN	M. Nader	S. Camo
DETAILS	L. Rus	S. Camo
QUANTITIES	L. Rus	Y. Zhang

PREPARED FOR THE STATE OF CALIFORNIA DEPARTMENT OF TRANSPORTATION

R. Manzanarez
PROJECT ENGINEER

BRIDGE NO. 34-0006L/R
KILOMETER POST 13.2/13.9

CU 04
EA 0120F1

DISREGARD PRINTS BEARING EARLIER REVISION DATES

REVISION DATES (PRELIMINARY STAGE ONLY) 05/08/08 06/06/08 09/24/08 01/06/08 03/20/08 12/15/08

SHEET 182R3 OF

Rev. Date: 5-18-98

ORIGINAL SCALE IN MILLIMETERS FOR REDUCED PLANS 0 10 20 30 40 50 60 70 80 90 100

FILE => L:\BB\04-012001\SAS\Contract Plans and CCO\CCO\In Progress\CCO#36S1\Revised 8-29-08 OPTION A\DGN\oatwa05.dgn

USERNAME => dwinrow DATE PLOTTED => 12 SEP 2008 TIME PLOTTED => 08:50:31

DIST.	COUNTY	ROUTE	KILOMETER POST TOTAL PROJECT	SHEET NO.	TOTAL SHEETS
04	SF	80	13.2/13.9	600R2	1204

REGISTERED ENGINEER - CIVIL

12-6-04
PLANS APPROVAL DATE

REGISTERED PROFESSIONAL ENGINEER
Marwan N. Nader
No. C 054426
Exp. 12/31/09
CIVIL
STATE OF CALIFORNIA

The State of California or its officers or agents shall not be responsible for the accuracy or completeness of electronic copies of this plan sheet.

T.Y. LIN / MOFFATT & NICHOL
825 BATTERY STREET
SAN FRANCISCO, CA 94111

To get to the web site, go to: http://www.dot.ca.gov

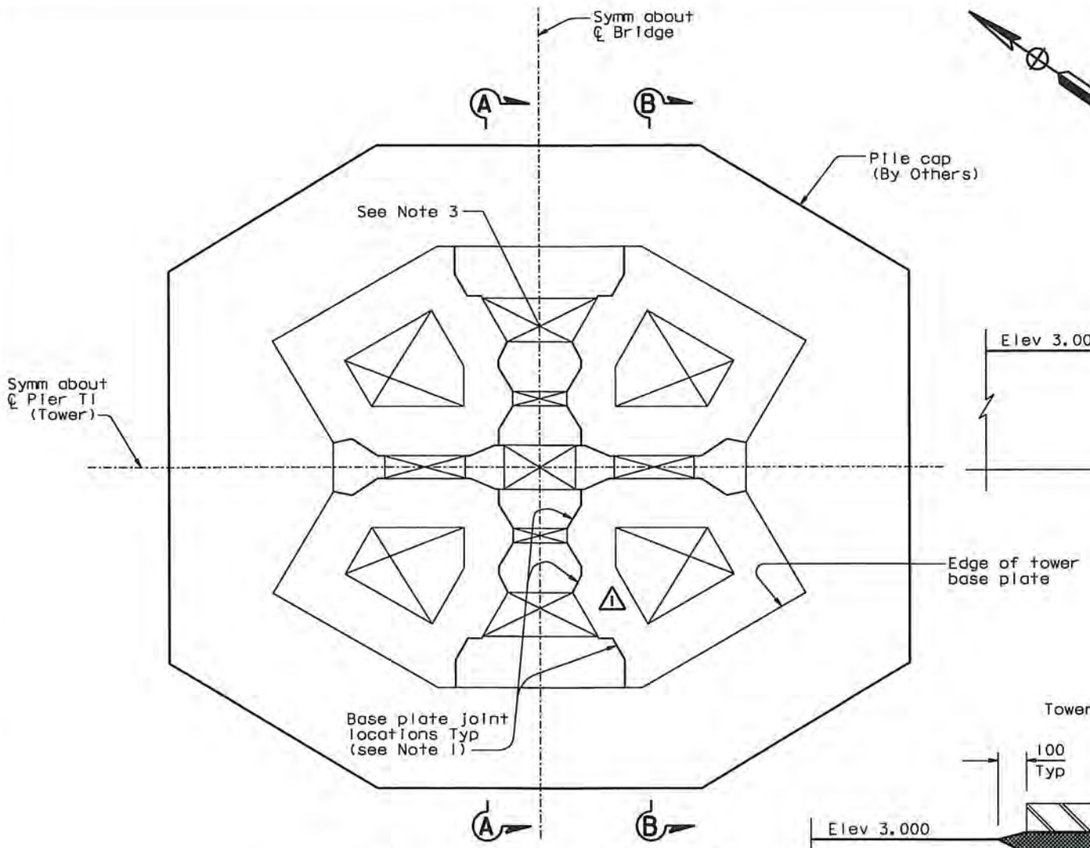

TOWER BASE ASSEMBLY PLAN
1:100

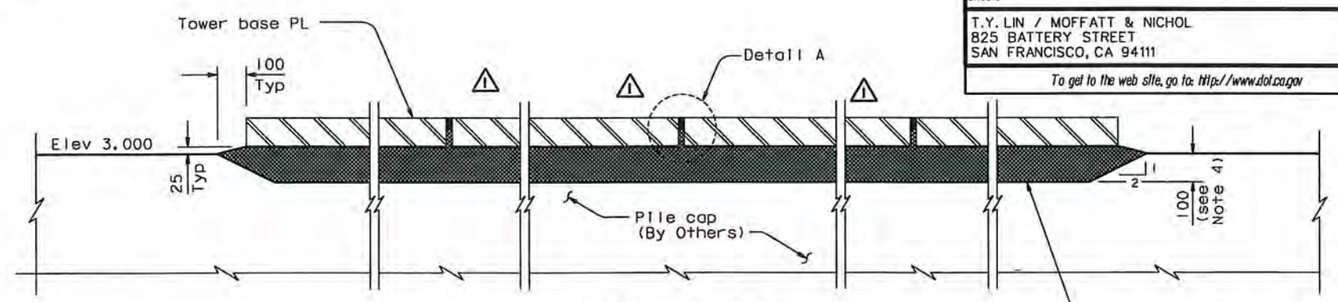

SECTION A-A
1:10

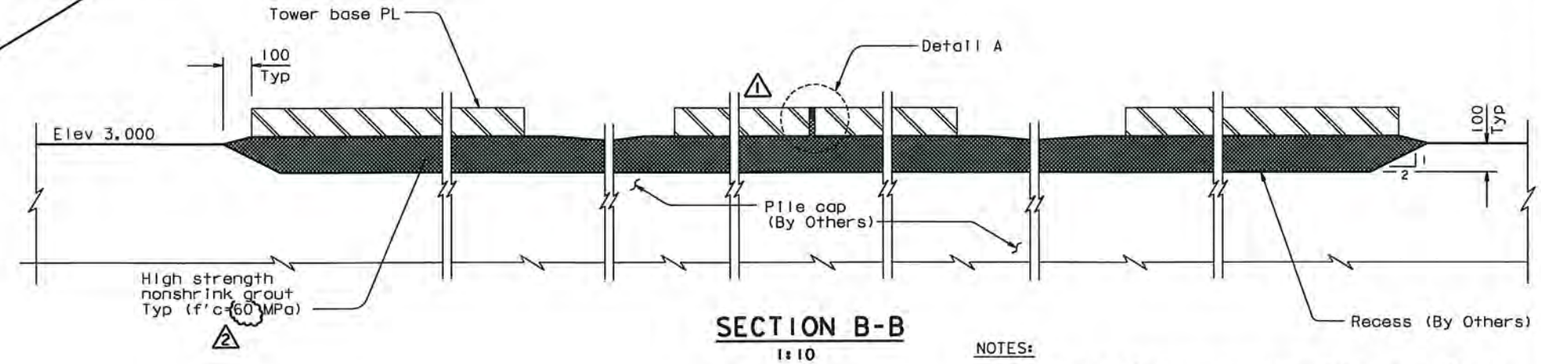

SECTION B-B
1:10

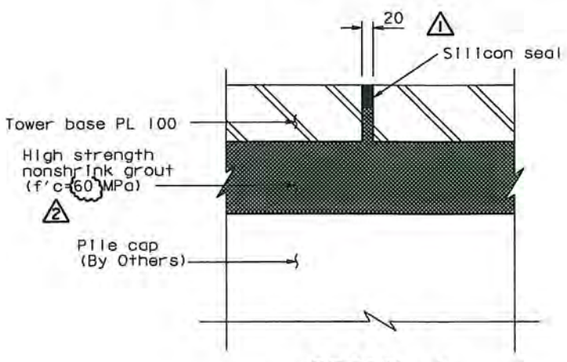

DETAIL A
1:5

NOTES:

1. For layout of tower base plate joint, see "Tower Anchorage Details No. 2" sheet. The Contractor may provide an alternative layout subject to the review and approval of the Engineer.
2. Base plates under each tower shaft and each shear plate shall be single plates or shall be built up from pieces by CJP welds done in the shop.
3. For tower drainage, see "Tower Drainage Details" sheets.
4. The Contractor may vary the depth of grout in order to achieve specified tolerances, provided there is positive flow towards the drains and the elevation of the top of the tower base plate is higher than the top of the drain.

REQUESTS FOR INFORMATION NOT ADDRESSED IN THIS CCO REMAIN IN FORCE

MARK	DATE	DESCRIPTIONS	BY	CH'D	CCO#
2	02/12/08	TOWER ANCHORAGE BASE PLATE GROUT	AS	MN	36S1
1	02/28/07	TOWER BASE PLATE	AS	MN	36

REVISIONS

CONTRACT CHANGE ORDER NO. 36S1
SHEET 6 OF 7

ALL DIMENSIONS ARE IN MILLIMETERS UNLESS OTHERWISE SHOWN

SAN FRANCISCO OAKLAND BAY BRIDGE
EAST SPAN SEISMIC SAFETY PROJECT
SELF-ANCHORED SUSPENSION BRIDGE (SUPERSTRUCTURE & TOWER)

TOWER ANCHORAGE DETAILS NO. 8

R. Valizadeh/V. Toan/Y.L./W.L./F.C.
DESIGN OVERSIGHT
Roger Valizadeh / Vona Toan / Y. Liu
SIGN OFF DATE 02/12/08

	BY	CHECKED
DESIGN	M. Nader	S. Camo
DETAILS	L. Rus	S. Camo
QUANTITIES	L. Rus	Y. Zhang

PREPARED FOR THE STATE OF CALIFORNIA DEPARTMENT OF TRANSPORTATION

R. Manzanarez
PROJECT ENGINEER

BRIDGE NO. 34-0006L/R
KILOMETER POST 13.2/13.9

Rev. Date: 5-18-98

ORIGINAL SCALE IN MILLIMETERS FOR REDUCED PLANS 0 10 20 30 40 50 60 70 80 90 100

CU 04
EA 0120F1

DISREGARD PRINTS BEARING EARLIER REVISION DATES

REVISION DATES (PRELIMINARY STAGE ONLY) 05/31/01 04/06/02 07/01/02 12/13/02

SHEET 183R2 OF

FILE => I:\bb\04-012001\sas\contract plans and cco\cco\in progress\cco=36s1\dgn\aetwa07.dgn

100 % PS&E

DATE PLOTTED => 22 FEB 2008 TIME PLOTTED => 10:08:52

USERNAME => ptom

DIST.	COUNTY	ROUTE	KILOMETER POST TOTAL PROJECT	SHEET NO.	TOTAL SHEETS
04	SF	80	13.2/13.9	604R1	1204

REGISTERED ENGINEER - CIVIL

12-6-04
PLANS APPROVAL DATE

REGISTERED PROFESSIONAL ENGINEER Marwan N. Nader No. C 054426 Exp. 12/31/09 CIVIL STATE OF CALIFORNIA

The State of California or its officers or agents shall not be responsible for the accuracy or completeness of electronic copies of this plan sheet.

T.Y. LIN / MOFFATT & NICHOL
825 BATTERY STREET
SAN FRANCISCO, CA 94111

Caltrans now has a web site! To get to the web site, go to: http://www.dot.ca.gov

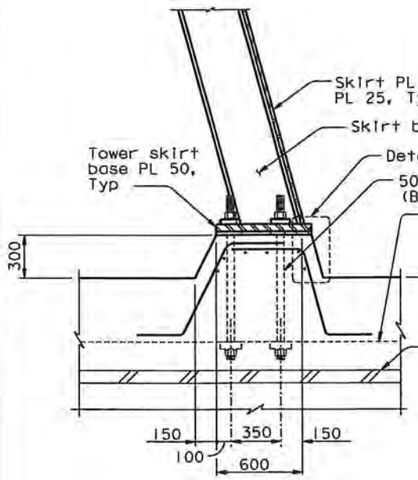

DETAIL F
1:20

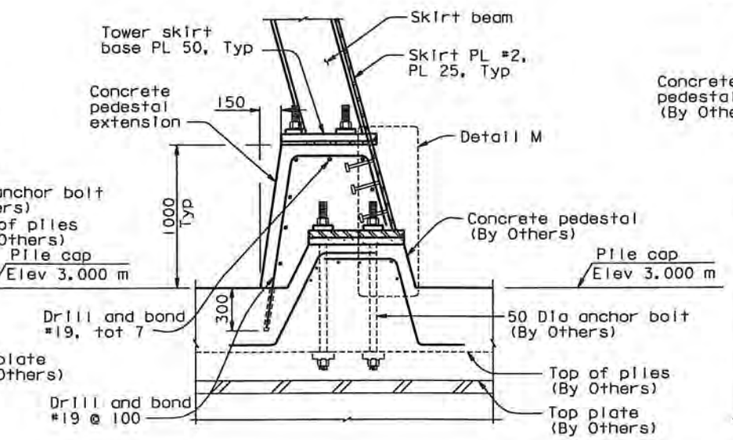

DETAIL G
1:20

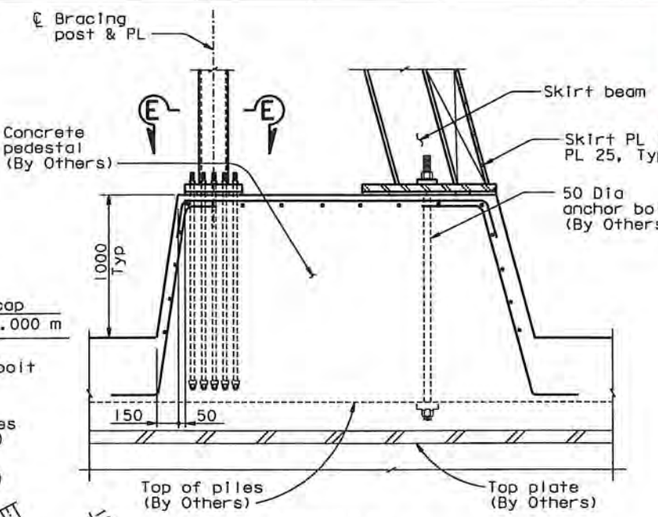

DETAIL H
1:20

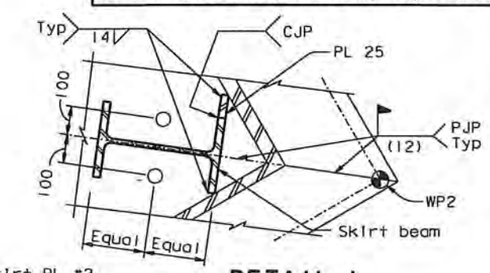

DETAIL L
1:10

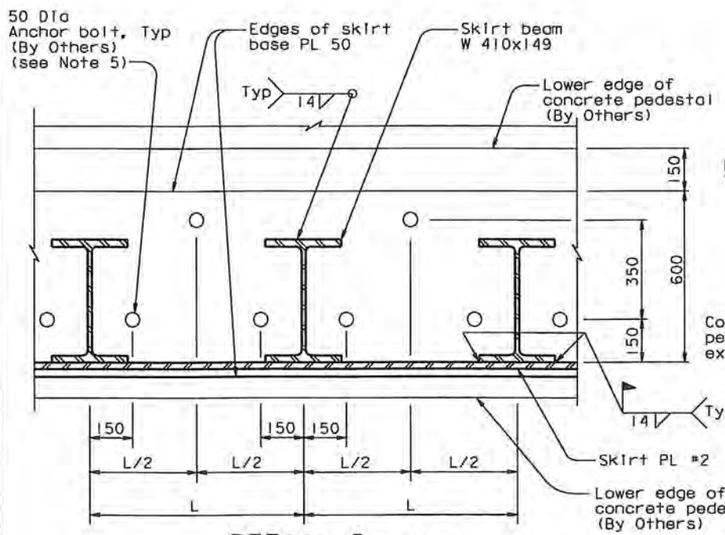

DETAIL D (TYPICAL)
1:10

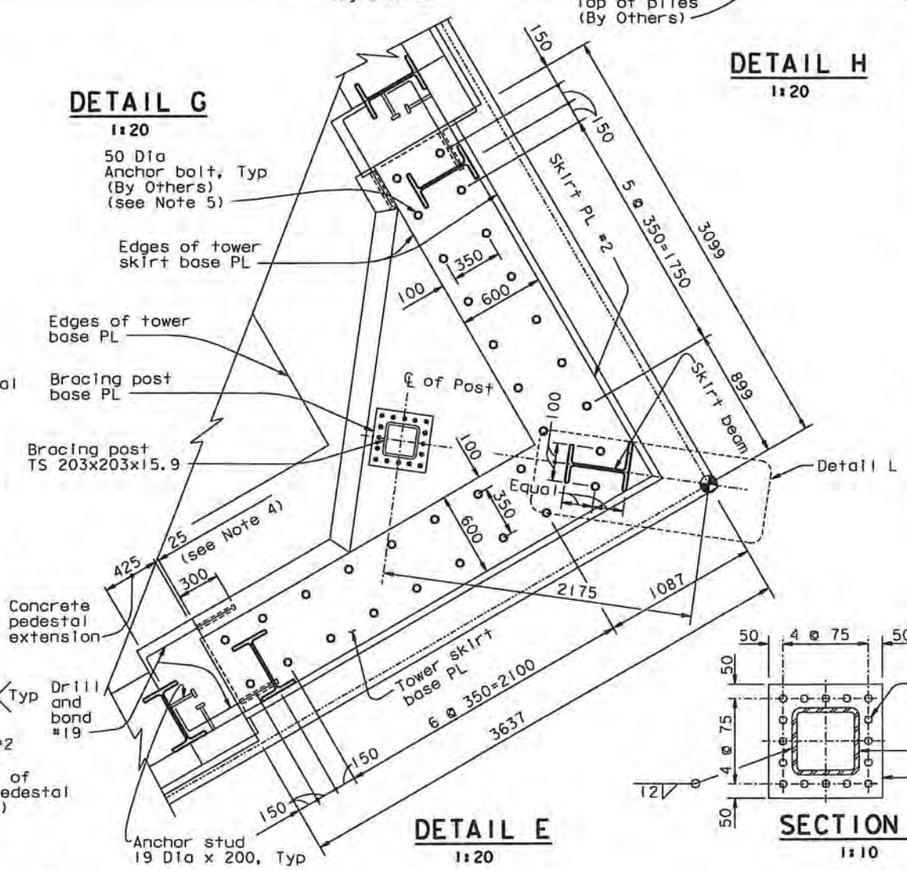

DETAIL E
1:20

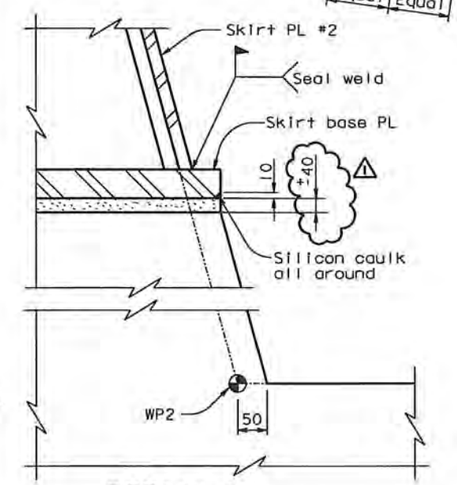

DETAIL M
1:2

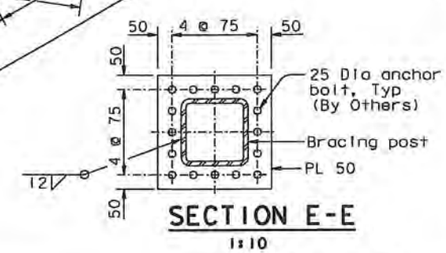

SECTION E-E
1:10

NOTES:

1. For tower anchorage details, see "Tower Anchorage Details" sheets.
2. Reinforcement is for information only, and by Others.
3. Tower skirt anchor bolts shall be pretensioned to 50% of their ultimate tensile strength. Tower skirt anchor bolts are A354 Gr. BC.
4. Remove existing cover concrete.
5. The Contractor shall field verify the locations of all anchor bolts before drilling holes in the skirt base plate.

ALL DIMENSIONS ARE IN MILLIMETERS UNLESS OTHERWISE SHOWN

REQUESTS FOR INFORMATION NOT ADDRESSED IN THIS CCO REMAIN IN FORCE

MARK	DATE	DESCRIPTIONS	BY	CH'D	CCO#
1	02/12/08	TOWER ANCHORAGE BASE PLATE GROUT	MN	NV	36S1

REVISIONS

CONTRACT CHANGE ORDER NO. 36S1
SHEET 7 OF 7

R. Vallizadeh/V. Toan/Y.L./W.L./F.C.
DESIGN OVERSIGHT
SIGN OFF DATE 02/12/08

Rev. Date: 5-18-98

DESIGN	BY M. Nader	CHECKED G. Baker	
DETAILS	BY S. Hamoud	CHECKED G. Baker	
QUANTITIES	BY S. Hamoud	CHECKED Y. Zhang	

ORIGINAL SCALE IN MILLIMETERS FOR REDUCED PLANS 0 10 20 30 40 50 60 70 80 90 100

PREPARED FOR THE STATE OF CALIFORNIA DEPARTMENT OF TRANSPORTATION

R. Manzanarez
PROJECT ENGINEER

CU 04
EA 0120F1

BRIDGE NO. 34-0006L/R
KILOMETER POST 13.2/13.9

DISREGARD PRINTS BEARING EARLIER REVISION DATES

REVISION DATES (PRELIMINARY STAGE ONLY) 01/26/99 03/27/01 01/30/02 03/26/02 12/19/02

SHEET 187R1 OF

SAN FRANCISCO OAKLAND BAY BRIDGE
EAST SPAN SEISMIC SAFETY PROJECT
SELF-ANCHORED SUSPENSION BRIDGE
(SUPERSTRUCTURE & TOWER)

TOWER SKIRT DETAILS NO. 4

100 % PS&E

FILE => I:\bb\04-012001\sas\contract plans and cco\cco\in progress\cco#36s1\dgn\aepad04.dgn

USERNAME => vignatovsk DATE PLOTTED => 22 FEB 2008 TIME PLOTTED => 14:44:07

CONTRACT CHANGE ORDER

Change Requested by: Engineer

CCO: 37 Suppl. No. 0 Contract No. 04 – 0120F4 Road SF-80-13.2/13.9 **FED. AID LOC.:**

To: **AMERICAN BRIDGE/FLUOR ENTERPRISES INC A JOINT VENTURE**

You are directed to make the following changes from the plans and specifications or do the following described work not included in the plans and specifications for this contract. ***NOTE: This change order is not effective until approved by the Engineer.***

Description of work to be done, estimate of quantities and prices to be paid. (Segregate between additional work at contract price, agreed price and force account.) Unless otherwise stated, rates for rental of equipment cover only such time as equipment is actually used and no allowance will be made for idle time. This last percentage shown is the net accumulated increase or decrease from the original quantity in the Engineer's Estimate.

Adjustment of Compensation at Lump Sum:

ITEM 1.

Modify the suspender brackets and cable system including, but not limited to, the following:

1. Add suspender bracket drip plates
2. Modify the cable band bolts
3. Add turnbuckles to the handrope cable system
4. Remove the suspender rope size requirement
5. Revise anchor rod galvanizing
6. Recess elastomeric collar caulk seal
7. Revise cable system painting requirements
8. Add caulk to fill gaps between plates
9. Hot bend the suspender bracket closure plate
10. Counterbore holes through shims

Revise the first paragraph of Special Provisions Section 10-1.60, "CABLE SYSTEM," subsection "MATERIALS AND FABRICATIONS," subsection "Suspender Ropes" as shown on sheet 3 of this change order.

Revise Special Provisions Section 10-1.60, "CABLE SYSTEM," subsection "MATERIALS AND FABRICATIONS," subsection "Anchor Rods" as shown on sheet 3 of this change order.

Revise the eleventh paragraph of Special Provisions Section 10-1.60, "CABLE SYSTEM," subsection "MATERIALS AND FABRICATIONS," subsection "Elastomeric Collars" as shown on sheet 3 of this change order.

Replace Special Provisions Section 10-1.71, "CLEAN AND PAINT CABLE SYSTEM" as shown on sheets 4 through 8 of this change order.

Adjustment of Compensation at Lump Sum..... $507,242.00

Estimate of Increase in Contract Item at Contract Price:

ITEM 2.

Extend side connection plates on the suspender brackets at PP 104 and 106.

Item No. 55: FURNISH STRUCTURAL STEEL (BRIDGE) (BOX GIRDER)
317 KG (+0.00%) @ $9.00 /KG =+$2,853.00 (+0.00%)

Item No. 56: ERECT STRUCTURAL STEEL (BRIDGE) (BOX GIRDER)
317 KG (+0.00%) @ $1.00 /KG =+$317.00 (+0.00%)

The quantity increases shown herein for Items #55 and #56, when combined with the quantity shown in the Engineer's Estimate, and as modified by any previous change orders or revisions to dimensions made by the Engineer, shall be the final quantity for which payment will be made.

Total Cost for Increase in Contract Item.....$3,170.00

CONTRACT CHANGE ORDER

Change Requested by: Engineer

CCO: 37 Suppl. No. 0 Contract No. 04 – 0120F4 Road SF-80-13.2/13.9 **FED. AID LOC.:**

The following revised and supplemental plan sheets detail the changes addressed in this change order: 740R2, 742R1, 743R1, 747R1, 748R1, 749R1, 750R1, 751R1, 752R1, 753R1, 762R1, 813R1, 814R1, 876R3, 876S1, and 876S2 (of 1204) as shown on sheets 9 through 24 of this change order.

This change order resolves the costs associated with Contractor Request For Information (RFI) numbers 37, 39, 44, 88, 105, 146R1, 411, 412, 430R1, 430R2, 454, 455, 458, 470R0, 470R1, 473, 505R0, 505R1, 524, 548R0, 548R1, 548R2, 649, 719, 1397, 1638R1, and 1638R2 with respect to changes listed above.

This change order resolves Contractor Request For Change Order (RFCO) number 5 and Request for Change (RFC) numbers 27, 27R1, and 27R2.

CHANGE ORDER COST AND TIME SUMMARY

(ITEM 1) Adjustment of Compensation at Lump Sum	$507,242.00
(ITEM 2) Increase in Contract Items at Contract Prices	$3,170.00
Total net pay for this change order	$510,412.00

This sum constitutes full and complete compensation for furnishing all labor, material, tools and incidentals including all markups by reason of this change.

Additional field work to install the suspender bracket drip plates will be addressed in a future change order.

Estimated Cost: Increase ☒ Decrease ☐ $510,412.00

By reason of this order the time of completion will be adjusted as follows: 0 Days

Submitted by

Signature Kannu Bala	**Resident Engineer** Kannu Balan, Senior T.E.	**Date** 11-29-10

Approval Recommended by

Signature BBoal	**Supervising Bridge Engineer** Brian Boal, Actg. Sup. B.E.	**Date** 30 NOV 2010

Engineer Approval by

Signature Pete Siegenthaler	**Principal Transportation Engineer** Peter Siegenthaler, Prin. T.E.	**Date** 12/13/10

We the undersigned contractor, have given careful consideration to the change proposed and agree, if this proposal is approved, that we will provide all equipment, furnish the materials, except as otherwise be noted above, and perform all services necessary for the work above specified, and will accept as full payment therefor the prices shown above.

NOTE: If you, the contractor, do not sign acceptance of this order, your attention is directed to the requirements of the specifications as to proceeding with the ordered work and filing a written protest within the time therein specified.

Contractor Acceptance by

Signature	(Print name and title) BRIAN A. PETERSEN	**Date** 10 DEC 10

In the Special Provisions Section 10-1.60, "CABLE SYSTEM," subsection "MATERIALS AND FABRICATIONS," subsection "Suspender Ropes," the first paragraph is revised as follows:

Wire for suspender ropes shall conform to the requirements of ASTM Designation: A 603 with Class A galvanizing. ~~The wire rope construction shall be 6x37 with an independent wire rope core (IWRC) or center fit rope core (CFRC).~~ The wires within a suspender rope shall not be spliced. The suspender ropes shall have an ultimate tensile strength of not less than 1,350 N/mm^2 and shall be prestretched to obtain a modulus of elasticity not less than 138,000 N/mm^2. The prestretching test may be performed by the wire rope supplier. The wire rope supplier shall provide certified test results to show the required minimum modulus of elasticity has been achieved.

In the Special Provisions Section 10-1.60, "CABLE SYSTEM," subsection "MATERIALS AND FABRICATIONS," subsection "Anchor Rods," is revised as follows:

Anchor rods shall conform to the requirements of ASTM Designation: A 354, Grade BC or BD and as specified in these special provisions. Nuts shall conform to the requirements of ASTM Designation: A 563. Washers shall conform to the requirements of ASTM Designation: F 436.

Anchor rods for PWS shall conform to grade BD. ~~and shall be mechanically galvanized~~.

Anchor rods for suspenders shall conform to grade BC ~~and shall be hot-dip galvanized~~.

Anchor rods designated as grade A 354, Grade BC and Grade BD shall be galvanized in accordance with the provisions in "Steel Structures," of these special provisions.

Prior to shipment, all rods shall be fully threaded into their assigned mating component, including nuts, to ensure that the thread pitch has been fabricated without error and the process of turning does not strip any of the threads.

In the Special Provisions Section 10-1.60, "CABLE SYSTEM," subsection "MATERIALS AND FABRICATIONS," subsection "Elastomeric Collars," the eleventh paragraph is revised as follows:

Caulking materials shall be tested to prove their ability to adhere to the substrates. Tests made by the manufacturer as part of product development are acceptable. Caulk seal shall be bonded to the suspender rope and to the vertical surface of the recess formed in the elastomeric split collar but shall not be bonded at the bottom contact surface with the elastomer. The caulk seal shall be installed with a proper shape factor as recommended by the manufacturer. The proper shape factor shall be obtained by installing and bonding a backing material into the recess or by molding a contour into the elastomeric split collar surface in contact with the bottom of the caulk seal. The backing material or the formed contour in the elastomer shall be covered with a film to prevent bonding of the caulking seal. Bond tests of the caulk seal to the elastomeric material and the suspender rope shall be performed per the recommendations of the caulk seal manufacturer, and shall be submitted for review and approval by the Engineer. ~~The caulk seal shall not bond to the elastomeric collar or shall otherwise be installed with a de-bonding film over the elastomer.~~

STATE OF CALIFORNIA
DEPARTMENT OF TRANSPORTATION

HC-5 (Rev. 5/93)

CONTRACT CHANGE ORDER NO. 37 SUPPL. NO. ---

ROAD 04-SF-80-13.2, 13.9 SHEET 4 OF 24 SHEETS
FEDERAL NO.(S) CONTRACT NO.: 04-0120F4

In the Special Provisions Section 10-1.71, "CLEAN AND PAINT CABLE SYSTEM," is replaced as follows:

10-1.71 CLEAN AND PAINT CABLE SYSTEM

This work shall consist of surface preparation and painting of the cable system as shown on the plans, in accordance with the provisions in Section 59, "Painting," of the Standard Specifications and these special provisions.

The cable paint system shall be applied to the wire wrapped main cable, ~~cable strand sockets, cable strand anchor rods, shims and nuts,~~ cable bands (except for surfaces that come into contact with the main cable, the metallized surfaces, and as specified in Section 10-1.60, "CABLE SYSTEM"; Steel castings of these special provisions, and as shown on the plans), cable band bolts, cable band caulking, ~~saddles~~, cable shrouds, suspender ropes, suspender rope sockets, suspender rope separators, suspender rope anchor rods and nuts, split collars, elastomeric collars, ~~keeps angles, keeper bolts~~, shims, suspender clamps, ~~handropes, handrope stanchions, handrope supports, handrope gates, handrope anchors,~~ handropes and all associated handrope system hardware and appurtenances in accordance with the manufacturer's recommendations and these special provisions.

A qualified representative of the manufacturer shall be present for the test demonstration, and for at least 3 days at the beginning of the application and at completion of the application. The manufacturer's representative shall certify to the Engineer in writing that the proper installation procedures are being followed, including, but not limited to the following:

A. Surface preparation.
B. Type of equipment used.
C. Mixing of the material components.
D. Method of application, and finish.

Handling, mixing and addition of thinners or any other material shall be performed in accordance with the manufacturer's recommendations and with prior approval of the Engineer.

The cable paint system shall not be applied when weather or surface conditions, as determined by the Engineer, are such that the material cannot be properly handled, applied, and cured within the specified time.

The Contractor shall perform a field test demonstration, in the presence of the Engineer and the manufacturer's representative, of all cable paint system application procedures to be used. The field test demonstration shall consist of surface application and painting of two adjacent cable bands and the main cable between them. The Contractor shall notify the Engineer at least 20 days prior to the test demonstration.

MATERIALS

The cable paint system shall consist of a primer, a two intermediate coat Noxyde Plus paint system, or equal, and a finish coat. The Noxyde Plus cable paint system shall be manufactured by the following supplier:

VENDOR ADDRESS AND PHONE NUMBER
MARTIN MATHYS S.A. KOLENBERG 23 3545 ZELEM/HALEN BELGIUM

The primer shall be a waterborne, single component acrylic coating with highly elastic polymers that cure to a highly elastic, seamless rubber coating. The primer shall be Pegalink or equal for the galvanized cable system components and Noxyde Plus or equal for the non-galvanized cable system components as listed under "Painting" of this section.

The two intermediate coats shall be 100 percent Noxyde Plus, or equal.

The finish coat shall be a water-borne, single component semi-gloss acrylic paint. The finish coat shall be Pegacryl or equal.

The primer, intermediate coats, and finish coat shall be three different colors. The finish coat color shall ~~match Federal Standard 595B, No. 26408~~ conform to the provisions in "Clean and Paint Structural Steel," of the special provisions. Color samples shall be submitted to the Engineer for approval 60 days prior to the start of painting.

Each shipment of cable paint system materials shall be accompanied by a Certificate of Compliance as provided in Section 6-I.07, "Certificates of Compliance," of the Standard Specifications. The certificate shall state that the materials and fabrication involved comply in all respects to the specifications and data submitted in obtaining approval, and shall include the type of paint products used and the application rates of all components of the cable paint system. The first shipment shall include a copy of the manufacturer's quality assurance program listing all in-house testing criteria.

Copies of Material Safety Data Sheets (MSDS) for all materials shall be kept on site for review by the Engineer.

The Contractor shall be responsible for the workmanship and performance of the installed cable paint system. The cable paint system shall be applied by a manufacturer certified applicator.

The primer for the galvanized cable ~~paint~~ system components shall conform to the following physical requirements:

Property	Test	Requirement
Weight of Solids	ASTM Designation: D2369	48% ± 2%
Specific Gravity		1.2± 0.03
Volume of Solids	ASTM Designation: D2697	45.4% ± 2%
Elasticity		200% Elongation
Water Resistance		100%
Alkali Resistance		Fair
Salt Spray Resistance		100%
Water Vapor Transmission	ASTM Designation: E96	15g H2O/m2 in 24 hours
Chemical Resistance	10% Acid solution	Fair

The primer for the non-galvanized cable system components and the intermediate coats of the cable paint system shall conform to the following physical requirements:

Property	Test	Requirement
Weight of Solids	ASTM Designation: D2369	67% ± 2%
Specific Gravity		1.26± 0.02
Volume of Solids	ASTM Designation: D2697	57% ± 2%
Elasticity	CSTB No. 15.381	200% Elongation
Water Resistance		12 mo. Immersion, no change
Alkali Resistance		No damage from Na(OH) at pH = 14
Salt Spray Resistance	CSTB No. 15.381	100%
Water Vapor Transmission	ASTM Designation: E96	5.5g H_2O/m2 in 24 hours
Chemical Resistance	25% mineral acid solution	Excellent
UV Ray Resistance		100% against outdoor exposure
Shore A Hardness		70
Aging and Adhesion		Unaffected after 8 hours, 60°C to -20°C with rain, frost, UV light and humidity
Sulfur Dioxide Resistance		100% resistance
Ozone Resistance		No cracking or embrittlement when subjected to 1 PPM ozone for 30 days
Hot water immersion		No effect after 1000 hours in 38°C water
Impact Resistance	DIN 51155	90 N
Tensile Adhesion	CSTB (France)	47.5 An/cm2

Sand Blasting Resistance	DIN 51155	Unaffected at 20,000 shots

A minimum of four ounces of polyolefin beads conforming to the properties in the following table shall be added to each gallon of finish coat applied to horizontal or walking surfaces. The beads shall be added to the finish coat prior to application and be thoroughly dispersed into the coating during normal mixing procedures. The cured finish coat, following addition of polyolefin beads, shall have a minimum average slip-resistance of 0.50 when wet as determined in accordance with ASTM Designation: F 1679. Additional beads shall be added if the average slip-resistance fails to meet this requirement as determined by the Contractor's independent laboratory upon testing of a sample of the finish coat. A copy of the slip-resistance testing results shall be furnished to the Engineer prior to application of finish coat.

Property	Requirements
Composition	Polyethylene or Polypropylene or a combination thereof
Appearance	White free-flowing powder
Size	210 to 300 µm
Specific Gravity	0.90
Initial Melt/Softening point	-6°C
Final Melt Point	166°C
Flash Point	greater than 275°C

The Contractor shall verify by testing that all properties are met. The physical properties shall be verified by an independent laboratory approved by the Engineer.

All material components of the cable paint system shall be supplied to the job site in the manufacturer's unopened packaging. Material for the cable paint system in opened or damaged containers shall not be used and shall be removed from the job site at the Contractor's expense.

All material components of the cable paint system shall be stored in cool, dry conditions, between 5°C and 20°C, out of direct sunlight and in accordance with the manufacturer's recommendations and Health and Safety regulations.

CLEANING

The main cables, suspender ropes, and handropes shall be cleaned in accordance with the provisions of Surface Preparation Specification No. 1, "Solvent Cleaning," of the SSPC: The Society for Protective Coatings. All traces of the zinc waterproofing paste applied to the main cable wires which has bled through the exterior wire wrapping shall be removed. Solvent cleaning shall be supplemented by hand tool cleaning in accordance with the provisions of Surface Preparation Specification No. 2, "Wire Brushing, and Hand Washing, and Rinsing," of the SSPC: The Society for Protective Coatings to remove any non-adherent shop applied coating, or detrimental foreign matter unable to be removed by solvent cleaning. Brass wire brushes shall be used for this surface preparation. Steel wire brushes will not be permitted.

Non-galvanized cable system components ~~Handrope stanchions, cable shrouds, and the surfaces of cable bands, saddles, and other items which are not in contact with the main cable or are metallized,~~ shall be dry blast cleaned in the shop in accordance with the provisions of Surface Preparation Specification No. 10, "Near White Blast Cleaning," of the SSPC: The Society for Protective Coatings. Blast cleaning shall leave all surfaces with a dense, uniform, angular, anchor pattern of no less than 40 µm as measured in accordance with the requirements of ASTM Designation: D 4417.

All steel surfaces to be coated with the Noxyde Plus cable paint system shall be cleaned to remove all oil, dirt, rubber, dust, and other material which would prevent proper bonding to and curing of the primer.

Within 72 hours of wire wrapping of the main cable, and prior to application of the primer, the main cable shall be securely wrapped with a waterproof film to protect from salt air. The waterproof film shall not be removed sooner than 72 hours prior to application of the primer. Solvent and hand cleaning, as described in this section, will not be permitted as a substitute for placement of waterproof film.

Immediately prior to the application of any component of the Noxyde Plus paint system, the receiving surface shall be dry and all remaining dust or loose particles shall be removed by blowing with clean, dry, oil free air.

PAINTING

Primer shall be applied within 4 hours of the completion of surface preparation. All locations showing evidence of contamination, as determined by the Engineer, shall be recleaned at the Contractor's expense. The Engineer shall be the sole judge of the need for recleaning.

Primer shall be applied in accordance with the manufacturer's recommendations. The primer shall be ~~spray~~ applied ~~in a fine even spray so as~~ to produce a uniform coating. ~~The dry film thickness of the primer shall be between 35 µm and 50 µm.~~

Primer for the following galvanized cable system components shall be Pegalink or equal. The dry film thickness for the Galvanized Cable System Components primer shall be between 35 µm and 50 µm

Galvanized Cable System Component	
Cable band bolts, washers, and nuts	Handrope shoulder bolts
	Handrope strand sockets
Suspender rope separators, clamps, bolts, and nuts	Handrope turnbuckles
Suspender rope clamp assemblies	Suspender Shims
Suspender rope sockets, anchor rods and nuts	Handropes
Suspender Rope split collars	Wrapping Wire

Primer for the following non-galvanized cable system components shall be Noxyde Plus or equal. The dry film thickness for the Non-galvanized Cable System Component primer shall be between 225 µm and 275 µm.

Non-galvanized Cable System Component	
Cable bands (Except for surfaces that come into contact with the main cable, metallized surfaces, as specified in section 10-1.60 CABLE SYSTEM; Steel castings of these special provisions, and as shown on the plans.)	Handrope stanchions
Cable shrouds	Handrope supports
	Handrope gates

The Noxyde Plus or equal p~~P~~rimer shall be applied in the shop to the Non-galvanized Cable System Components. ~~handrope stanchions, cable shrouds, and the surfaces of cable bands, saddles, and other items which are not in contact with the main cable or are metallized.~~

Surfaces painted with primer shall be protected from damage. Should damage to the primer occur, as determined by the Engineer, the surface shall be repaired at the Contractor's expense prior to application of the intermediate coats.

The primer shall cure before application of the intermediate coats. The Engineer with the assistance of the manufacturer's representative at the job site shall determine when the cure is adequate to continue.

The intermediate coats shall be applied within 24 hours of the application of primer, weather permitting, except for the shop applied non-galvanized cable system components. ~~handrope stanchions, cable shrouds, and the surfaces of cable bands and saddles~~. All undercoat surfaces showing evidence of contamination, as determined by the Engineer, shall be cleaned. The Engineer shall be the sole judge of the need for recleaning.

The two intermediate coats shall be applied in accordance with the manufacturer's recommendations. Each intermediate coat shall be applied to produce a uniform coating. ~~The two intermediate coats shall be spray applied in a fine even spray so as to produce a uniform coating.~~ The total dry film thickness of the two intermediate coats shall be between 200 µm and 350 µm.

The two intermediate coats shall cure before application of the finish coat. The Engineer with the assistance of the manufacturer's representative at the job site shall determine when the cure is adequate to continue.

The finish coat shall be applied within 24 hours of the application of intermediate coats, weather permitting. All locations showing evidence of contamination, as determined by the Engineer, shall be cleaned in accordance with the manufacturer's recommendations.

The application of the intermediate coats and the finish coat shall not be made if rain is forecast within 6 hours of application, or as determined by the Engineer. The finish coat shall be applied only when the atmospheric and steel temperatures are above 10°C and the relative humidity is below 85 percent, and these conditions are forecast to be maintained for a minimum of 6 hours. The temperature of the main cable shall be at least 3°C above the dew point.

The finish coat shall be applied in accordance with the manufacturer's recommendations. The finish coat shall be applied to produce a uniform coating. The dry film thickness of the finish coat shall be between 35 µm and 50 µm.

For galvanized cable components, ~~T~~the total dry film thickness of all coats shall be between 270 µm and 450 µm. For non-galvanized cable components, the total dry film thickness of all coats shall be between 460 µm and 675 µm. The color of each coat shall be uniform throughout the entire member.

The Contractor shall check wet film thickness at least once every 10 square meters using a gauge pin or standard comb type thickness gauge.

The painted surface shall be checked for visible pinholes and other surface defects. The paint system shall provide a smooth, pinhole free continuous film on all coated surfaces.

In the event that any materials are damaged during this work due to the Contractor's operations, the Contractor shall repair or replace the damaged materials at the Contractor's expense, and as approved by the Engineer.

PAYMENT

The contract lump sum price paid for clean and paint cable system shall include full compensation for furnishing all labor, materials, tools, equipment and incidentals, including the services of the manufacturer's representative as specified herein, and for doing all the work involved in clean and paint cable system, as shown on the plans, as specified in the Standard Specifications and these special provisions, and as directed by the Engineer.

REGISTERED PROFESSIONAL ENGINEER
MARWAN M. NADER
No. C 054426
Exp. 12-31-11
CIVIL
STATE OF CALIFORNIA

STATE OF CALIFORNIA - DEPARTMENT OF TRANSPORTATION

CONTRACT CHANGE ORDER MEMORANDUM

TO: Pete Siegenthaler, Prin TE /	FILE: **E.A.** 04 - 0120F4
FROM: Kannu Balan, Senior TE	**CO-RTE-PM** SF-80-13.2/13.9
	FED. NO.
CCO#: **37** SUPPLEMENT#: **0** Category Code: **CHSA**	CONTINGENCY BALANCE (incl. this change) **$172,066,997.81**
COST: **$510,412.00** INCREASE ☑ DECREASE ☐	HEADQUARTERS APPROVAL REQUIRED? ☑ YES ☐ NO
SUPPLEMENTAL FUNDS PROVIDED: **$0.00**	IS THIS REQUEST IN ACCORDANCE WITH ENVIRONMENTAL DOCUMENTS? ☑ YES ☐ NO
CCO DESCRIPTION: Mod Susp Brackets & Handrope Sys	**PROJECT DESCRIPTION:** CONSTRUCT SELF-ANCHORED SUSPENSION BRIDGE

Original Contract Time:	Time Adj. This Change:	Previously Approved CCO Time Adjustments:	Percentage Time Adjusted: (including this change)	Total # of Unreconciled Deferred Time CCO(s): (including this change)
2490 Day(s)	**0** Day(s)	**501** Day(s)	**20** %	**4**

THIS CHANGE ORDER PROVIDES FOR:

Modifying the suspender brackets and cable system including, but not limited to, the following:

1. Adding suspender bracket drip plates
2. Modifying the cable band bolts
3. Adding turnbuckles to the handrope cable system
4. Removing the suspender rope size requirement
5. Revising anchor rod galvanizing
6. Recessing elastomeric collar caulk seal
7. Revising cable system painting requirements
8. Adding caulk to fill gaps between plates
9. Hot bending the suspender bracket closure plate
10. Counterboring holes through shims
11. Extending side connection plates on the suspender brackets at PP 104 and 106

Revising the first paragraph of Special Provisions Section 10-1.60, "CABLE SYSTEM," subsection "MATERIALS AND FABRICATIONS," subsection "Suspender Ropes."

Revising Special Provisions Section 10-1.60, "CABLE SYSTEM," subsection "MATERIALS AND FABRICATIONS," subsection "Anchor Rods."

Revising the eleventh paragraph of Special Provisions Section 10-1.60, "CABLE SYSTEM," subsection "MATERIALS AND FABRICATIONS," subsection "Elastomeric Collars."

Revising Special Provisions Section 10-1.71, "CLEAN AND PAINT CABLE SYSTEM."

Modifying the suspender brackets will allow for easier adjustment and eliminate interferences. Cable band bolt lengths shall be increased to correct a design deficiency and also meet manufacturer thread exposure recommendations for hydraulic bolt tensioning equipment. Adding turnbuckles improves adjustment capability of the Main Cable hand-rope system. The PWS anchor rods are too long for the rotary barrel used for mechanical galvanizing, therefore the requirement was changed to hot dip galvanizing. Section 10-1.71 "Clean and Paint Cable System" of the Special Provisions shall be modified to improve corrosion protection.

This change order resolves the costs associated with Contractor Request For Information (RFI) numbers 37, 39, 44, 88, 105, 146R1, 411, 412, 430R1, 430R2, 454, 455, 458, 470R0, 470R1, 473, 505R0, 505R1, 524, 548R0, 548R1, 548R2, 649, 719, 1397, 1638R1, and 1638R2 with respect to changes listed above.

This change order resolves Contractor Request For Change Order (RFCO) number 5 and Request for Change (RFC) numbers 27, 27R1, and 27R2.

For this change, the Contractor will be paid the agreed upon lump sum and additional contract item cost of $510,412.00, which can be financed from the contingency fund. A detailed cost analysis is on file. Additional field work to install the suspender bracket drip plates will be addressed in a future change order.

ADA Notice: For individuals with sensory disabilities, this document is available in alternate formats. For information call: (916) 654-6410 or TDD (916) 654-3880 or write Records and Forms Management, 1120 N Street, MS-89, Sacramento, CA 95814.

No time adjustment is warranted as this change order does not affect the controlling operation.

This change order has concurrence from Gary Pursell (Resident Engineer), Peter Siegenthaler (Principal TE), Rob Kobal (HQ Oversight), Ken Terpstra (Project Manager), Bill Zanetich (Structure Maintenance), and Reza Valizadeh (Design Oversight).

The Resident Engineer requests Head Quarters CCO Desk "Issue and Approve".

CONCURRED BY:			
Construction Engineer:	Res. Eng., Gary Pursell, Sup. TE	Date	5/4/07
Bridge Engineer:	Struct Rep, Rick Morrow, Sup TE	Date	5/4/07
Project Engineer:	CT Oversight, Reza Valizadeh, P.E	Date	6/25/07
Project Manager:	Proj Manager, Ken Terpstra	Date	9/2/07
FHWA Rep.:	HQ, Rob Kobal	Date	5/7/07
Environmental:	Struct Maint, Bill Zanetich, P.E.	Date	6/26/07
Other (specify):	PCE, Pete Siegenthaler, Prin TE	Date	5/7/07
Other (specify):	Design of Record, Marwan Nader,	Date	1/20/07
District Prior Approval By:	HQ Materials, Lisa Dobeck	Date	3/19/07
HQ (Issue Approve) By:		Date	
Resident Engineer's Signature:		Date	
			11-29-10

ESTIMATE OF COST

	THIS REQUEST	TOTAL TO DATE
ITEMS	$3,170.00	$3,170.00
FORCE ACCOUNT	$0.00	$0.00
AGREED PRICE	$0.00	$0.00
ADJUSTMENT	$507,242.00	$507,242.00
TOTAL	$510,412.00	$510,412.00

FEDERAL PARTICIPATION

☐ PARTICIPATING ☐ PARTICIPATING IN PART ☑ NONE
☐ NON-PARTICIPATING (MAINTENANCE) ☐ NON-PARTICIPATING

FEDERAL SEGREGATION (if more than one Funding Source or P.I.P. type)
☑ CCO FUNDED PER CONTRACT ☐ CCO FUNDED AS FOLLOWS

FEDERAL FUNDING SOURCE PERCENT

ADA Notice: For individuals with sensory disabilities, this document is available in alternate formats. For information call: (916) 654-6410 or TDD (916) 654-3880 or write Records and Forms Management, 1120 N Street, MS-89, Sacramento, CA 95814.

DIST.	COUNTY	ROUTE	KILOMETER POST TOTAL PROJECT	SHEET NO.	TOTAL SHEETS
04	SF	80	13.2/13.9	740R2	1204

REGISTERED ENGINEER - CIVIL

12/19/02

PLANS APPROVAL DATE

The State of California or its officers or agents shall not be responsible for the accuracy or completeness of electronic copies of this plan sheet.

REGISTERED PROFESSIONAL ENGINEER Marwan N. Nader No. C 054426 Exp. 12/31/07 CIVIL STATE OF CALIFORNIA

T.Y. LIN / MOFFATT & NICHOL
825 BATTERY STREET
SAN FRANCISCO, CA 94111

To get to the web site, go to: http://www.dot.ca.gov

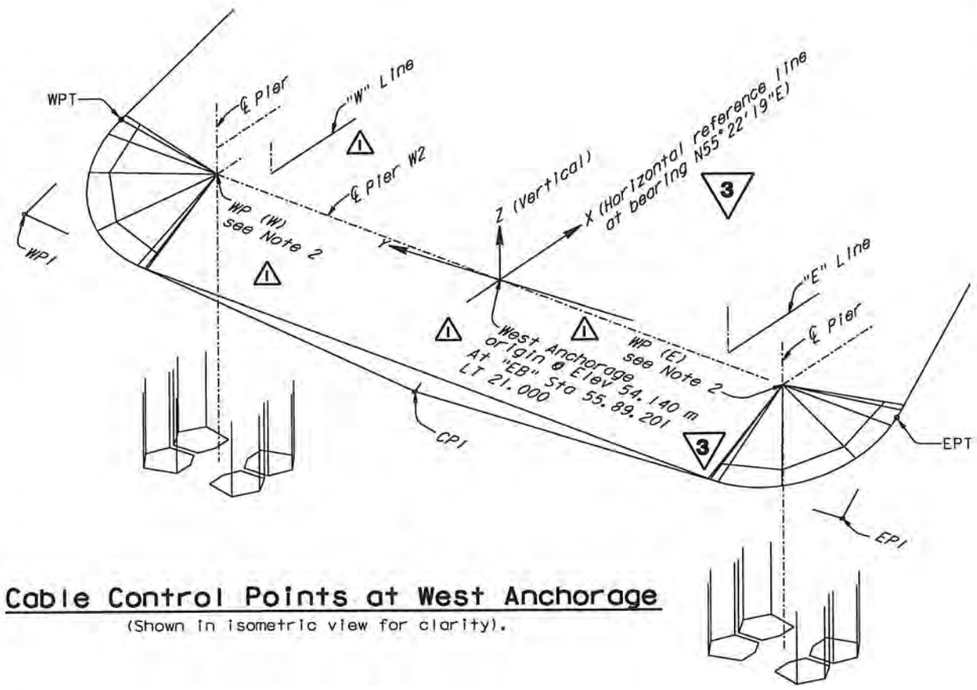

Cable Control Points at West Anchorage

(Shown in isometric view for clarity).

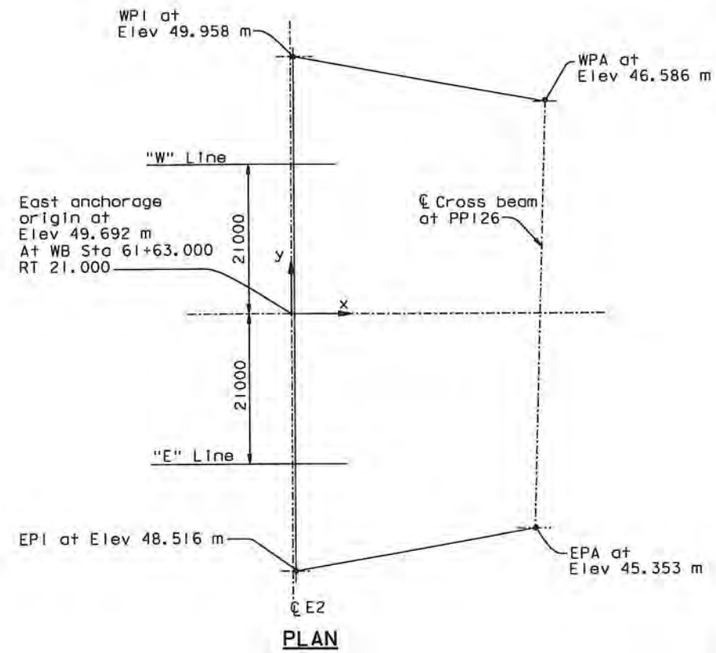

PLAN

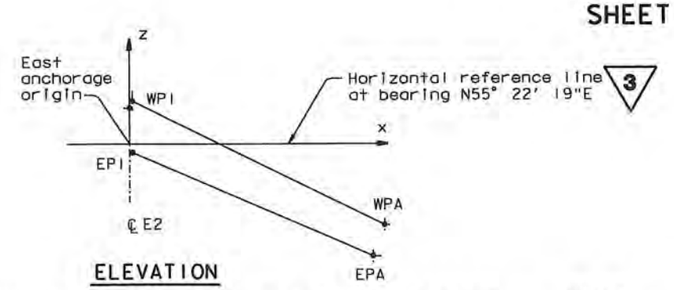

ELEVATION

Cable Control Points at East Anchorage

MARK	DATE	DESCRIPTIONS	BY	CH'D	CCO#
2	04/16/07	CABLE SYSTEM	GB	MN	37
1	01/31/07	WEST DEVIATION SADDLE GEOMETRY	AS	MN	15

REVISIONS

CONTRACT CHANGE ORDER NO. 37SO
SHEET 9 OF 24

NOTES:

1. At the west anchorage the cable profile shall be determined from the EPT and WPT. Geometry of saddles shall conform to EPI, WPI and CPI.
2. WP(W) & WP(E) do not coincide with ℄ Pier W2, ℄ Pier W2E nor ℄ Pier W2W.

COORDINATES OF CONTROL POINTS OF WEST ANCHORAGE (WEST ANCHORAGE COORDINATE SYSTEM)

	"W" Line Saddle WP	"E" Line Saddle WP	WPT	WPI	CPI	EPT	EPI
X	30	-7	1318	-8804	-11278	1587	-8804
Y	26024	-25978	36396	38086	101	-36352	-38084
Z	1057	-1059	2060	-2411	-5080	-765	-5530

COORDINATES OF CONTROL POINTS OF EAST ANCHORAGE (EAST ANCHORAGE COORDINATE SYSTEM)

	WPI 3	WPA	EPI	EPA
X	393	35971	393	34241
Y	36045	29439	-36025	-29916
Z	266	-3117	-1176	-4351

3 REVISED PER ADDENDUM NO. 3 DATED NOVEMBER 7, 2005

ALL DIMENSIONS ARE IN MILLIMETERS UNLESS OTHERWISE SHOWN

SAN FRANCISCO OAKLAND BAY BRIDGE
EAST SPAN SEISMIC SAFETY PROJECT
SELF-ANCHORED SUSPENSION BRIDGE (SUPERSTRUCTURE & TOWER)

SUSPENSION CABLE LAYOUT NO. 3

R. Valizadeh/V. Toan/Y.L./W.L./F.C.
DESIGN OVERSIGHT
SIGN OFF DATE 04/16/07

	BY	CHECKED
DESIGN	M. Nader	S. Rodriguez
DETAILS	C. Mibelli	S. Rodriguez
QUANTITIES	C. Mibelli	G. Baker

PREPARED FOR THE STATE OF CALIFORNIA DEPARTMENT OF TRANSPORTATION

R. Manzanarez
PROJECT ENGINEER

BRIDGE NO. 34-0006L/R
KILOMETER POST 13.2/13.9

Rev. Date: 5-18-98

ORIGINAL SCALE IN MILLIMETERS FOR REDUCED PLANS 0 10 20 30 40 50 60 70 80 90 100

CU 04
EA 0120F1

DISREGARD PRINTS BEARING EARLIER REVISION DATES

REVISION DATES (PRELIMINARY STAGE ONLY) 05/13/99 08/06/99 05/31/01 04/08/02 07/01/02 12/19/02

SHEET 323R2 OF

FILE => I:\bb\04-012001\sas\contract plans and cco\cco\in progress\cco#37\dgn\cagsc103.dgn

100 % PS&E

DATE PLOTTED => 08 AUG 2007 TIME PLOTTED => 15:48:54

USERNAME => ptom

DIST.	COUNTY	ROUTE	KILOMETER POST TOTAL PROJECT	SHEET NO.	TOTAL SHEETS
04	SF	80	13.2/13.9	742R1	1204

REGISTERED ENGINEER - CIVIL

12-6-04
PLANS APPROVAL DATE

REGISTERED PROFESSIONAL ENGINEER Marwan N. Nader No. C 054426 Exp. 12/31/07 CIVIL STATE OF CALIFORNIA

The State of California or its officers or agents shall not be responsible for the accuracy or completeness of electronic copies of this plan sheet.

T.Y. LIN / MOFFATT & NICHOL
825 BATTERY STREET
SAN FRANCISCO, CA 94111

Caltrans now has a web site! To get to the web site, go to: http://www.dot.ca.gov

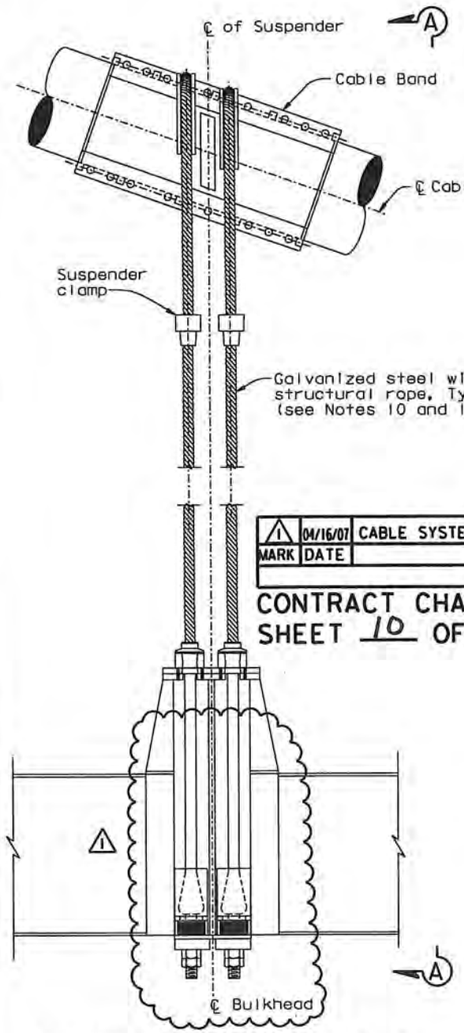

SUSPENDER TYPES 1 & 2

NTS

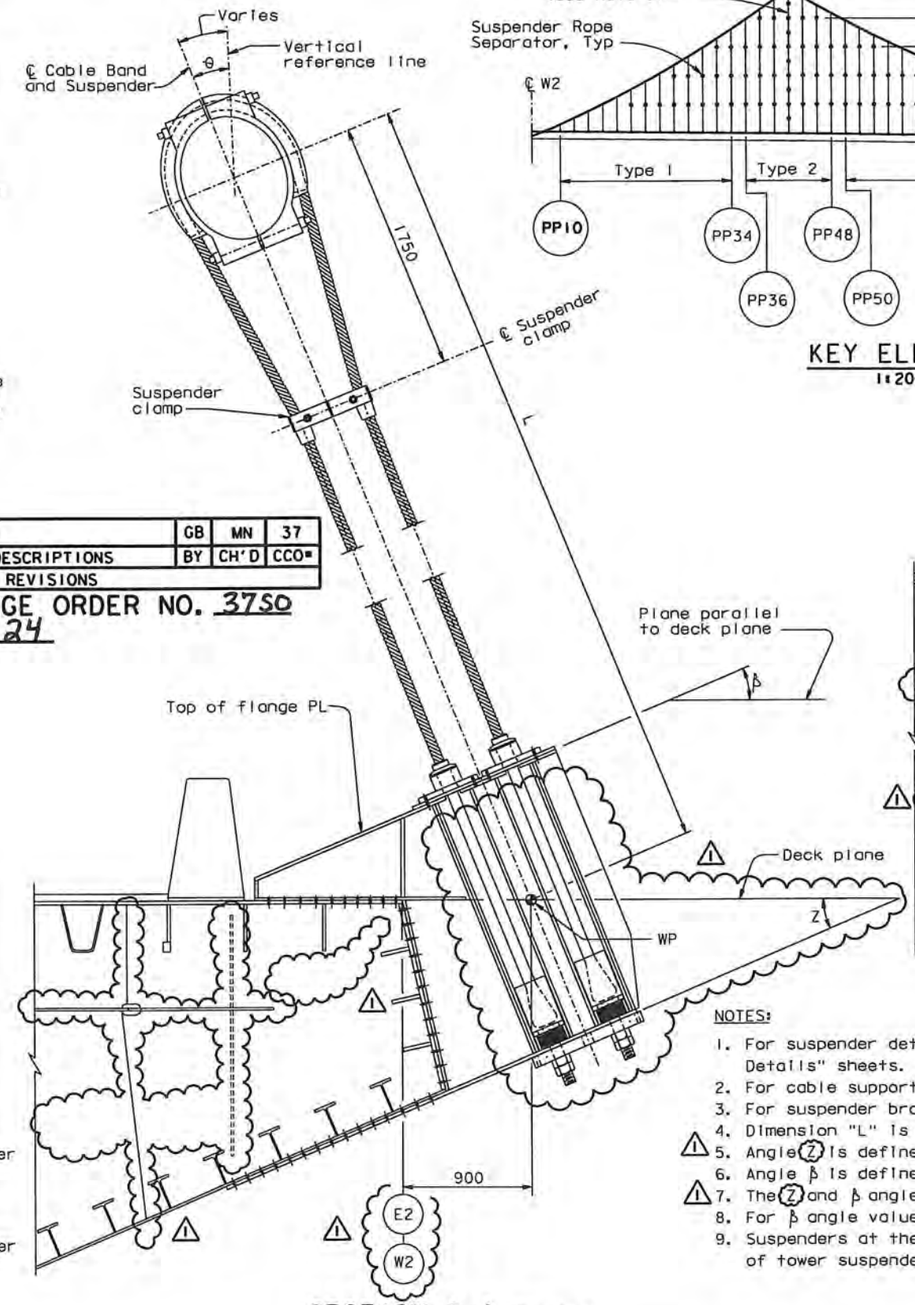

SECTION A-A (TYPICAL)

NTS

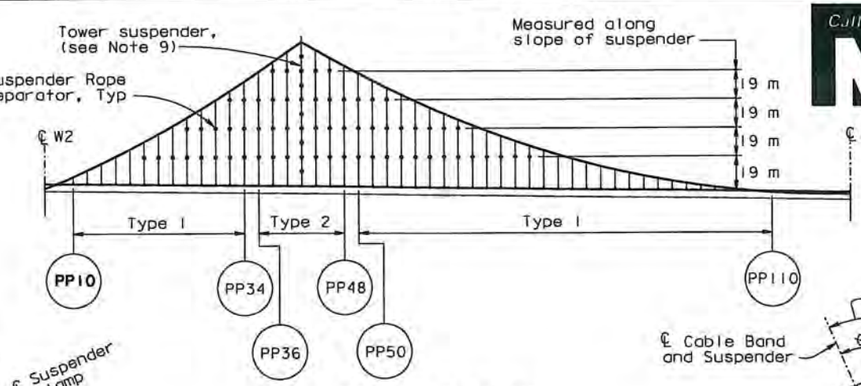

KEY ELEVATION

1:2000

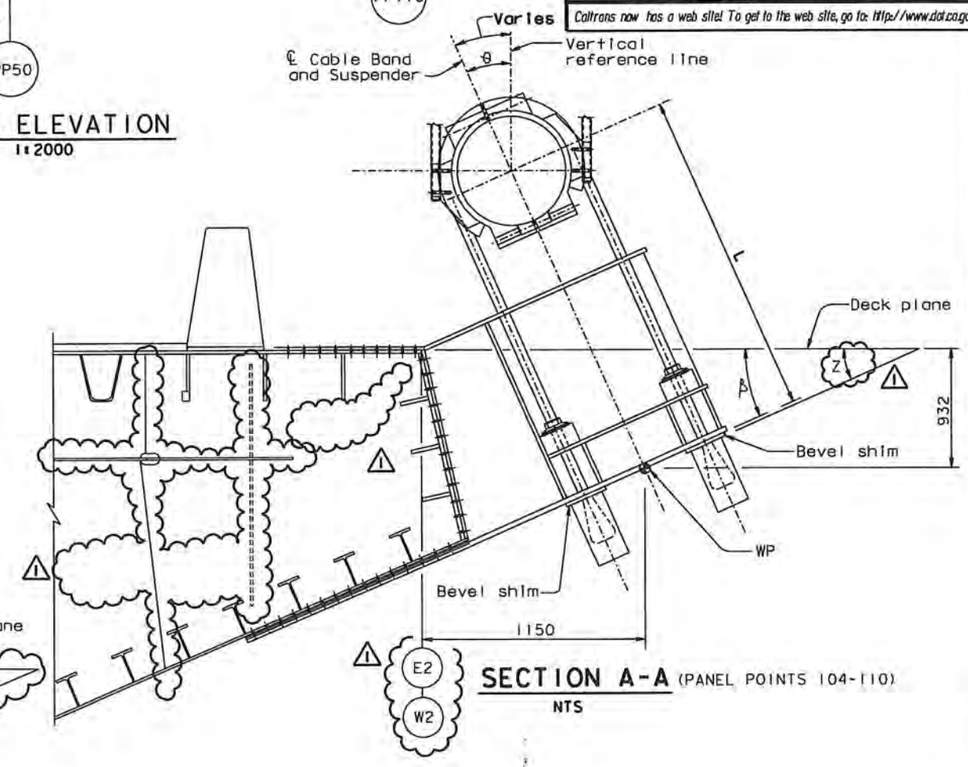

SECTION A-A (PANEL POINTS 104-110)

NTS

MARK	DATE	DESCRIPTIONS	BY	CH'D	CCO#
1	04/16/07	CABLE SYSTEM	GB	MN	37

REVISIONS

CONTRACT CHANGE ORDER NO. 3750
SHEET 10 OF 24

NOTES:

1. For suspender details, see "Suspender Assembly Details" sheets. For cable band details, see "Cable Band Details" sheets.
2. For cable support at PP 112, 114 & 116, see "Cable Bracket Details" sheets.
3. For suspender bracket details, see "Suspender Bracket Details" sheets.
4. Dimension "L" is defined as the distance between the ℄ of the cable and the WP of the suspender bracket.
5. Angle Z is defined as the angle between the deck plane and the top flange of the suspender bracket.
6. Angle β is defined as the angle between the deck plane and the top of the bevel shim.
7. The Z and β angles shall be taken as equal.
8. For β angle values, see "Suspender Bracket Details No.3" sheet.
9. Suspenders at the tower are architectural and are substantially different from all others. For details of tower suspenders, see "Suspenders At Tower Details" sheets.
10. Type 1 Suspender ropes shall have a metallic area of at least 2742 mm² and a nominal diameter no greater than 78 mm. The vertical component of dead load on the four rope parts of one suspender shall be limited to 3200 kN.
11. Type 2 Suspender ropes shall have a metallic area of at least 4460 mm² and a nominal diameter no greater than 102 mm. The vertical component of dead load on the four rope parts of one suspender shall be limited to 4800 kN.

ALL DIMENSIONS ARE IN MILLIMETERS UNLESS OTHERWISE SHOWN

SAN FRANCISCO OAKLAND BAY BRIDGE
EAST SPAN SEISMIC SAFETY PROJECT
SELF-ANCHORED SUSPENSION BRIDGE
(SUPERSTRUCTURE & TOWER)

SUSPENDER LAYOUT NO. 1

R. Valizadeh/V. Toan/Y. L./W. L./F. C.
DESIGN OVERSIGHT
SIGN OFF DATE 04/16/07

	BY	CHECKED
DESIGN	M. Nader	S. Rodriguez
DETAILS	C. Mibelli	S. Rodriguez
QUANTITIES	C. Mibelli	G. Baker

PREPARED FOR THE STATE OF CALIFORNIA DEPARTMENT OF TRANSPORTATION

R. Manzanarez
PROJECT ENGINEER

BRIDGE NO. 34-0006L/R
KILOMETER POST 13.2/13.9

CU 04
EA 0120F1

DISREGARD PRINTS BEARING EARLIER REVISION DATES

REVISION DATES (PRELIMINARY STAGE ONLY) 01/25/99 03/25/99 06/25/99 03/01/01 06/08/02 07/01/02 12/19/02

SHEET 325R1 OF

ORIGINAL SCALE IN MILLIMETERS FOR REDUCED PLANS 0 10 20 30 40 50 60 70 80 90 100

Rev. Date: 5-18-98

FILE => I:\bb\04-012001\sas\contract plans and cco\cco\in progress\cco#37\dgn\cagsus02.dgn

100 % PS&E

DATE PLOTTED => 29 AUG 2007 TIME PLOTTED => 16:30:24

USERNAME => ptom

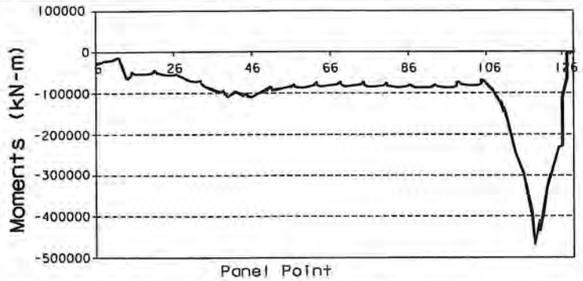

Chart A: DL Moment Corresponding to suspender forces shown in suspender Schedule (Eastbound shown, Westbound similar)

* Negative moment corresponds to tension at the top fiber.

MARK	DATE	DESCRIPTIONS	BY	CH'D	CCO#
1	04/16/07	CABLE SYSTEM	GB	MN	37

REVISIONS

CONTRACT CHANGE ORDER NO. 3750

SHEET 11 OF 24

10. Suspender length "L" and forces shown are for information only. The Contractor shall compute the final installed suspender lengths based on suspender forces from his final erection engineering analysis, including measured reactions at Hinges A and K and his estimate of the suspender weight (based on fabrication shop drawings) of all installed materials.

Caltrans Metric

DIST.	COUNTY	ROUTE	KILOMETER POST TOTAL PROJECT	SHEET NO.	TOTAL SHEETS
04	SF	80	13.2/13.9	743R1	1204

REGISTERED ENGINEER - CIVIL

12-6-04

PLANS APPROVAL DATE

REGISTERED PROFESSIONAL ENGINEER Morwan N. Nader No. C 054426 Exp. 12/31/07 CIVIL STATE OF CALIFORNIA

The State of California or its officers or agents shall not be responsible for the accuracy or completeness of electronic copies of this plan sheet.

T.Y. LIN / MOFFATT & NICHOL
825 BATTERY STREET
SAN FRANCISCO, CA 94111

Caltrans now has a web site! To get to the web site, go to: http://www.dot.ca.gov

SUSPENDER SCHEDULE

West Bound										East Bound									
Panel Point	L (m)	θ (degree) 1	Z (degree) 1	Force "F" (kN)	Panel Point	L (m)	θ (degree) 1	Z (degree) 1	Force "F" (kN)	Panel Point	L (m)	θ (degree) 1	Z (degree) 1	Force "F" (kN)	Panel Point	L (m)	θ (degree) 1	Z (degree) 1	Force "F" (kN)
PP10	7.40	17.58	16.48	3011	PP62	55.32	19.76	18.82	2803	PP10	6.99	18.59	19.77	2995	PP62	56.15	19.50	20.84	2816
PP12	12.38	18.55	17.48	2983	PP64	51.15	19.82	18.96	2810	PP12	12.02	19.11	20.31	2928	PP64	51.93	19.56	20.89	2823
PP14	17.54	18.94	17.90	2552	PP66	47.15	19.89	19.01	2807	PP14	17.23	19.28	20.52	2534	PP66	47.89	19.62	21.03	2820
PP16	22.86	19.13	18.12	2550	PP68	43.33	19.96	19.05	2821	PP16	22.61	19.35	20.61	2534	PP68	44.01	19.69	21.07	2834
PP18	28.33	19.24	18.26	2544	PP70	39.67	20.03	19.11	2825	PP18	28.15	19.37	20.66	2527	PP70	40.31	19.76	21.12	2837
PP20	33.95	19.30	18.35	2553	PP72	36.18	20.10	19.16	2818	PP20	33.85	19.36	20.69	2536	PP72	36.77	19.83	21.17	2830
PP22	39.73	19.33	18.41	2551	PP74	32.86	20.18	19.22	2829	PP22	39.72	19.34	20.70	2535	PP74	33.41	19.91	21.23	2841
PP24	45.66	19.35	18.46	2543	PP76	29.71	20.26	19.29	2828	PP24	45.75	19.32	20.71	2527	PP76	30.21	19.99	21.29	2840
PP26	51.75	19.35	18.49	2549	PP78	26.72	20.35	19.36	2816	PP26	51.95	19.28	20.71	2537	PP78	27.18	20.07	21.36	2829
PP28	58.00	19.35	18.52	2552	PP80	23.91	20.44	19.43	2823	PP28	58.31	19.25	20.71	2548	PP80	24.33	20.15	21.43	2838
PP30	64.41	19.34	18.45	2551	PP82	21.26	20.53	19.51	2806	PP30	64.84	19.21	20.60	2550	PP82	21.64	20.24	21.50	2837
PP32	70.97	19.32	18.46	2529	PP84	18.79	20.64	19.60	2788	PP32	71.54	19.16	20.58	2536	PP84	19.12	20.34	21.58	2818
PP34	77.68	19.30	18.46	2576	PP86	16.47	20.74	19.69	2794	PP34	78.41	19.12	20.56	2584	PP86	16.77	20.44	21.67	2826
PP36	84.56	19.28	18.45	2688	PP88	14.33	20.86	19.79	2787	PP36	85.43	19.08	20.53	2698	PP88	14.58	20.55	21.77	2822
PP38	91.64	19.26	18.58	2960	PP90	12.35	20.98	19.90	2769	PP38	92.67	19.04	20.64	2968	PP90	12.57	20.66	21.87	2800
PP40	98.80	19.23	18.41	4592	PP92	10.54	21.11	20.02	2774	PP40	99.99	19.00	20.46	4597	PP92	10.72	20.78	21.98	2806
PP44	100.35	19.25	18.44	4593	PP94	8.89	21.25	20.15	2764	PP44	101.64	19.00	20.47	4599	PP94	9.03	20.91	22.09	2797
PP46	94.73	19.31	18.64	2966	PP96	7.41	21.39	20.29	2741	PP46	95.97	19.06	20.67	2977	PP96	7.52	21.03	22.22	2773
PP48	89.19	19.36	18.55	2711	PP98	6.09	21.54	20.44	2744	PP48	90.38	19.11	20.57	2723	PP98	6.16	21.16	22.34	2776
PP50	83.87	19.41	18.59	2616	PP100	4.93	21.69	20.58	2732	PP50	85.00	19.16	20.62	2628	PP100	4.98	21.29	22.45	2763
PP52	78.70	19.46	18.63	2581	PP102	3.94	21.84	20.72	2706	PP52	79.78	19.21	20.66	2593	PP102	3.95	21.39	22.55	2740
PP54	73.68	19.52	18.65	2767	PP104	4.06	20.33	19.22	2707	PP54	74.70	19.26	20.67	2780	PP104	4.06	19.87	21.03	2736
PP56	68.83	19.58	18.69	2777	PP106	3.39	19.95	18.83	961	PP56	69.81	19.32	20.71	2790	PP106	3.37	19.42	20.58	1135
PP58	64.16	19.64	18.73	2786	PP108	2.79	19.28	18.15	946	PP58	65.09	19.38	20.75	2798	PP108	2.75	18.63	19.78	1115
PP60	59.65	19.70	18.77	2788	PP110	2.25	18.12	16.99	995	PP60	60.53	19.44	20.79	2801	PP110	2.20	17.28	18.43	1172
					PP112	SEE NOTE 5			749						PP112	SEE NOTE 5			893

NOTES:

1. Information provided corresponds to the DL cable and suspender profile, highway profile and cable control points.
2. Suspender length "L" is based on unstretched length and it is provided for quantity estimation purposes. See Note 10.
3. The force "F" is defined as the vertical component of the suspenders tension at the completion of construction. The force "F" is divided equally among the 4 parts of the suspender ropes. These forces correspond to the moment diagram shown in Chart A.
4. For location of cable at PP112, 114 & 116, see "Cable Bracket Details" sheets.
5. For the cable configuration shown no suspenders are installed at PP112. The cable is mounted to the girder using the details provided in "Cable Bracket Details" sheets. The Contractor shall develop his cable profile so as to generate at PP112 the force "F" given in the suspender schedule.
6. Angle (Z) 1 accounts for the sag of the suspender due to its own weight.
7. Suspender lengths shown in the Suspender Schedule do not include camber for live load. The Contractor shall include live load camber in his fabricated suspender lengths. See "Camber Schedule" sheet.
8. Cable layout, deck profile and box girder dead load moment do not account for the future LRT SDL. When LRT SDL is added, readjustment of suspenders should be done to achieve the proper cable layout, deck profile and box girder DL moment. Readjustment of pier E2 bearings and Hinge A bearings may also have to be done.
9. For length, geometry, and tension of suspenders at tower, see "Suspenders at Tower Details No. 4" sheet.

ALL DIMENSIONS ARE IN MILLIMETERS UNLESS OTHERWISE SHOWN

R. Vaziizadeh/V. Toan/Y.L./W.L./F.C.
DESIGN OVERSIGHT
SIGN OFF DATE 04/16/07

	BY	CHECKED
DESIGN	M. Nader	S. Rodriguez
DETAILS	C. Mibelli	S. Rodriguez
QUANTITIES	C. Mibelli	G. Baker

PREPARED FOR THE STATE OF CALIFORNIA DEPARTMENT OF TRANSPORTATION

R. Manzanarez
PROJECT ENGINEER

BRIDGE NO. 34-0006L/R
KILOMETER POST 13.2/13.9

SAN FRANCISCO OAKLAND BAY BRIDGE
EAST SPAN SEISMIC SAFETY PROJECT
SELF-ANCHORED SUSPENSION BRIDGE
(SUPERSTRUCTURE & TOWER)

SUSPENDER LAYOUT NO. 2

Rev. Date: 5-18-98

ORIGINAL SCALE IN MILLIMETERS FOR REDUCED PLANS 0 10 20 30 40 50 60 70 80 90 100

CU 04
EA 0120F1

DISREGARD PRINTS BEARING EARLIER REVISION DATES

REVISION DATES (PRELIMINARY STAGE ONLY) 01/05/99 03/05/99 06/04/99 05/04/01 06/06/02 07/08/02 12/06/02 07/18/03

SHEET 326R1 OF

FILE => I:\bb\04-012001\sas\contract plans and cco\cco\in progress\cco=37\dgn\cagsus03.dgn

100 % PS&E

DATE PLOTTED => 24 APR 2007 TIME PLOTTED => 11:32:00

USERNAME => ptom

MARK	DATE	DESCRIPTIONS	BY	CH'D	CCO#
1	04/16/07	CABLE SYSTEM	GB	DT	37

REVISIONS

CONTRACT CHANGE ORDER NO. 3750
SHEET 12 OF 24

FOR REVISIONS ONLY

Daniel J. Turner
REGISTERED PROFESSIONAL ENGINEER
Daniel J. Turner
No. C 65033
Exp. 06/30/07
CIVIL
STATE OF CALIFORNIA

Caltrans Metric

DIST.	COUNTY	ROUTE	KILOMETER POST TOTAL PROJECT	SHEET NO.	TOTAL SHEETS
04	SF	80	13.2/13.9	747R1	1204

George Baker
REGISTERED ENGINEER - CIVIL
12-6-04
PLANS APPROVAL DATE

REGISTERED PROFESSIONAL ENGINEER
George S. Baker
No. C 57112
Exp. 12/31/05
CIVIL
STATE OF CALIFORNIA

The State of California or its officers or agents shall not be responsible for the accuracy or completeness of electronic copies of this plan sheet.

T.Y. LIN / MOFFATT & NICHOL
825 BATTERY STREET
SAN FRANCISCO, CA 94111

Caltrans now has a web site! To get to the web site, go to: http://www.dot.ca.gov

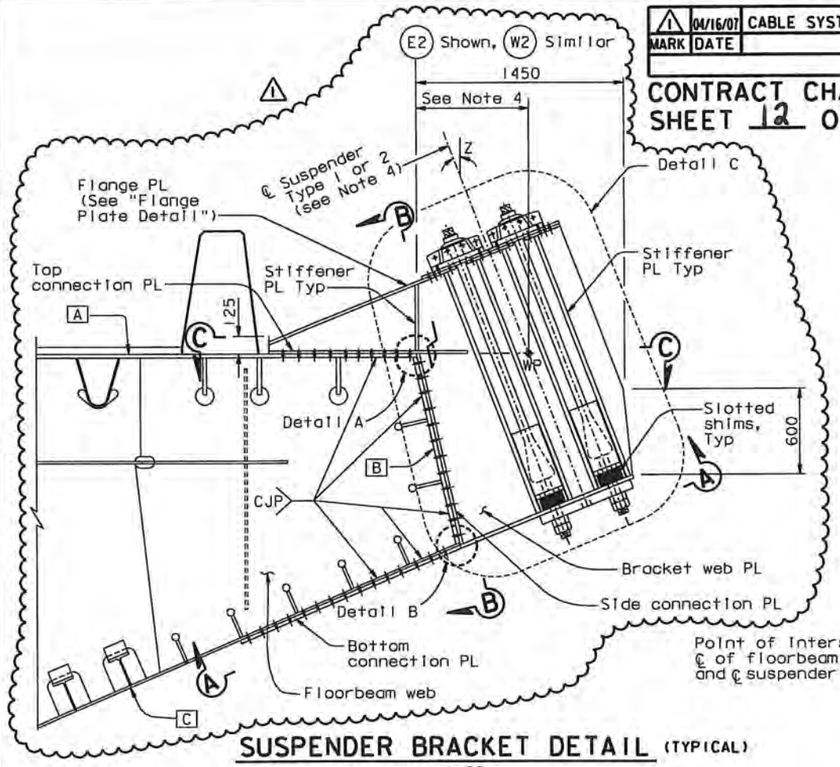

SUSPENDER BRACKET DETAIL (TYPICAL)
1:20

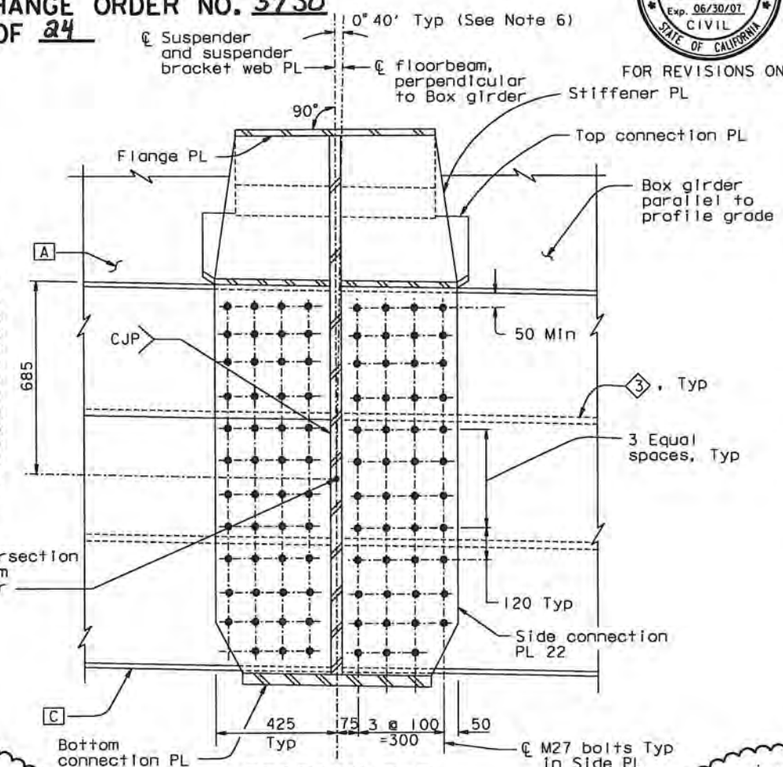

SECTION B-B
1:10

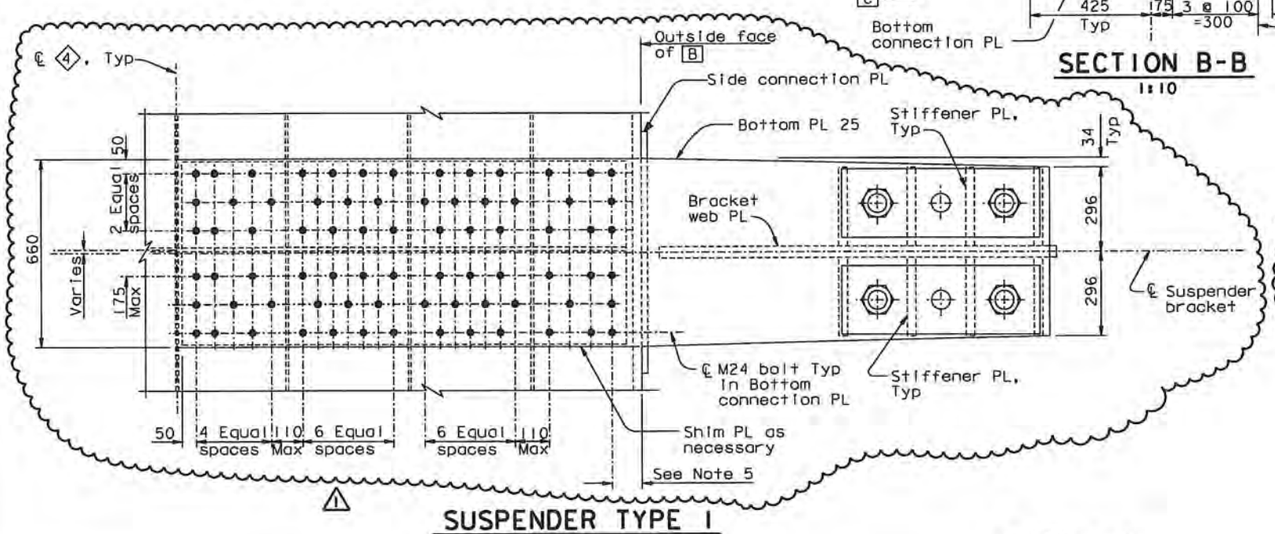

SUSPENDER TYPE 1

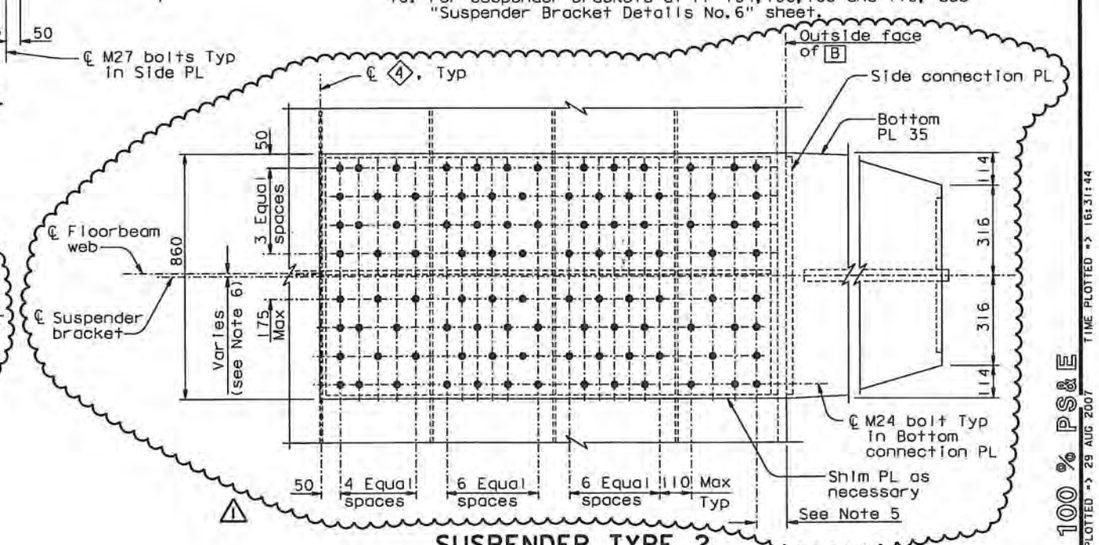

SUSPENDER TYPE 2

VIEW A-A
1:10

LEGEND:

WP Working Point (see Note 4)

A Girder face designation

4 Girder stiffener type

NOTES:

1. For Section C-C, flange plate detail and shim detail, see "Suspender Bracket Details No. 2" sheet.
2. For Detail A and Detail B, see "Suspender Bracket Details No. 2" sheet.
3. For Detail C, see "Suspender Bracket Details No. 3" sheet.
4. For location of suspender types 1 and 2 and working point details, see "Suspender Layout" sheets.
5. For details of bottom connection not shown, see Detail B on "Suspender Bracket Details No. 2" sheet.
6. The Contractor shall consider variation in roadway grade in his details.
7. For "Suspender Bracket Details" sheets all bolts shall be detailed according to the Bolt Dimension Table. See "Typical Girder Details No. 1" sheet. All bolts are HS unless noted otherwise.
8. For "Suspender Bracket Details" sheets unless noted otherwise all fillet welds shall be 6 mm for plate sizes not greater than 20 mm. For plates greater than 20 mm fillet welds shall be 8 mm, unless noted otherwise.
9. For layout and other details of suspenders at tower PP42, see "Suspenders At Tower Details" sheets.
10. For suspender brackets at PP 104, 106, 108 and 110, see "Suspender Bracket Details No. 6" sheet.

ALL DIMENSIONS ARE IN MILLIMETERS UNLESS OTHERWISE SHOWN

R. Valizadeh/V. Toan/Y.L./W.L./F.C.
DESIGN OVERSIGHT
Roya Valizadeh / Vonn Toan / Y. Liu
SIGN OFF DATE 04/16/07
Rev. Date: 5-18-98

	BY		CHECKED	
DESIGN	G. Baker		T. McMeans	
DETAILS	S. Cama		P. Ritchie	
QUANTITIES	C. Mauch		C. Mibelli	

PREPARED FOR THE STATE OF CALIFORNIA DEPARTMENT OF TRANSPORTATION

R. Manzanarez
PROJECT ENGINEER

BRIDGE NO. 34-0006L/R
KILOMETER POST 13.2/13.9

SAN FRANCISCO OAKLAND BAY BRIDGE
EAST SPAN SEISMIC SAFETY PROJECT
SELF-ANCHORED SUSPENSION BRIDGE
(SUPERSTRUCTURE & TOWER)

SUSPENDER BRACKET DETAILS NO. 1

ORIGINAL SCALE IN MILLIMETERS FOR REDUCED PLANS 0 10 20 30 40 50 60 70 80 90 100

CU 04
EA 0120F1

DISREGARD PRINTS BEARING EARLIER REVISION DATES

REVISION DATES (PRELIMINARY STAGE ONLY) 05/15/98 08/27/99 05/27/01 04/26/02 07/27/02 12/19/02

SHEET 330R1 OF

FILE => I:\bb\04-012001\sas\contract plans and cco\cco\in progress\cco#37\dgn\cagsadl1.dgn

100 % PS&E

DATE PLOTTED => 29 AUG 2007 TIME PLOTTED => 16:31:44

USERNAME => ptom

DIST.	COUNTY	ROUTE	KILOMETER POST TOTAL PROJECT	SHEET NO.	TOTAL SHEETS
04	SF	80	13.2/13.9	748R1	1204

George Baker
REGISTERED ENGINEER - CIVIL
12-6-04
PLANS APPROVAL DATE

REGISTERED PROFESSIONAL ENGINEER George S. Baker No. C 57112 Exp. 12/31/05 CIVIL STATE OF CALIFORNIA

The State of California or its officers or agents shall not be responsible for the accuracy or completeness of electronic copies of this plan sheet.

T.Y. LIN / MOFFATT & NICHOL
825 BATTERY STREET
SAN FRANCISCO, CA 94111

Caltrans now has a web site! To get to the web site, go to: http://www.dot.ca.gov

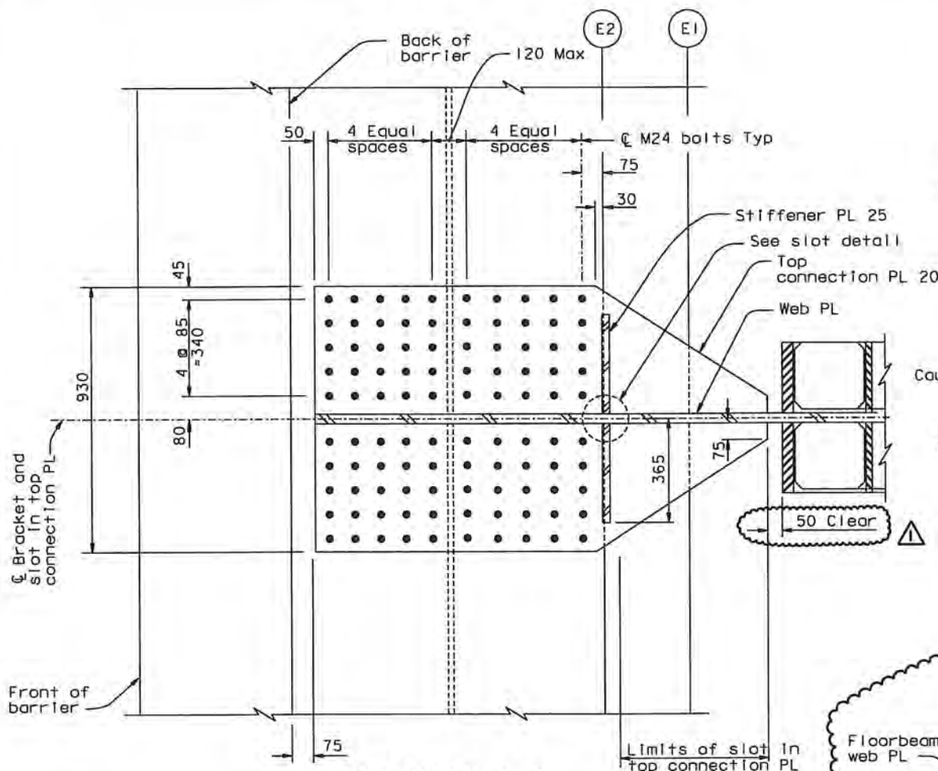

SECTION C-C
1:10

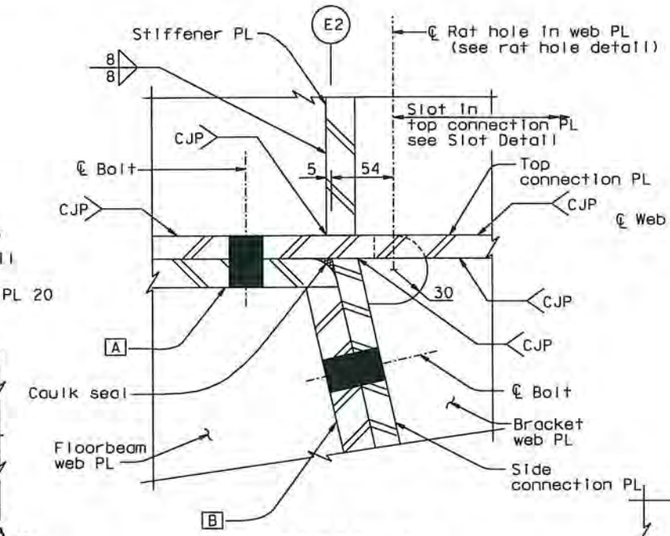

DETAIL A
1:2.5

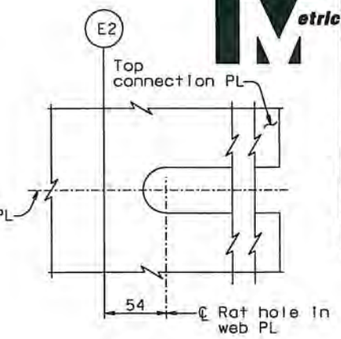

TOP CONNECTION PL
SLOT DETAIL
1:2.5

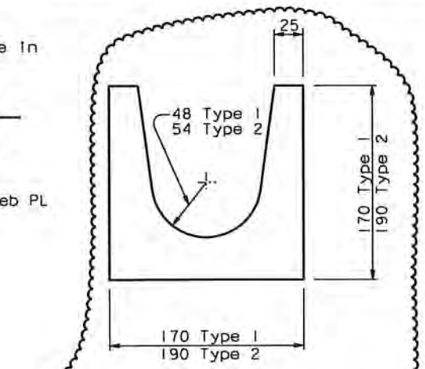

SLOTTED SHIM DETAIL
1:2.5
(see Note 5)

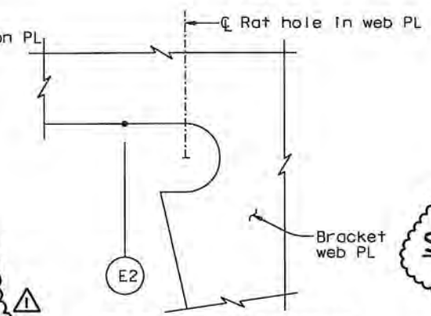

RAT HOLE DETAIL
1:2.5

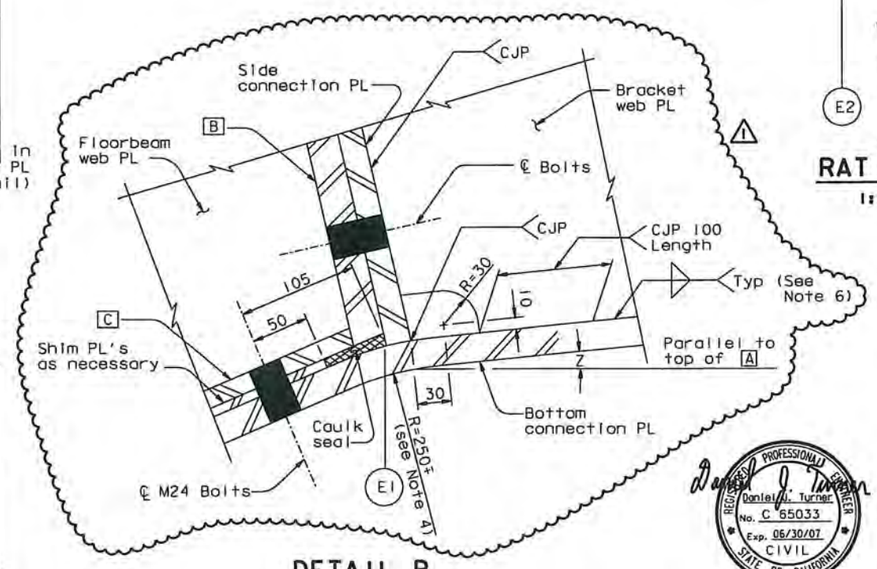

DETAIL B
1:2.5

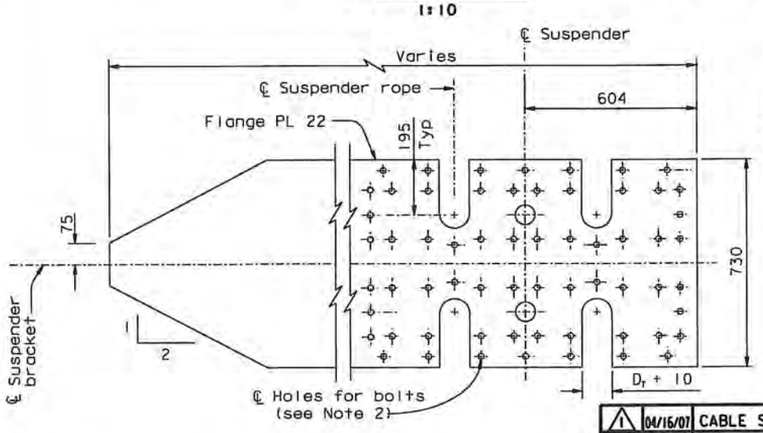

FLANGE PLATE DETAIL
1:10

NOTES:

1. For location of suspender types 1 and 2, see "Suspender Layout" sheets.
2. For flange plate bolt pattern, see "Suspender Bracket Details No. 4" sheet.
3. For suspender socket details, see "Suspender Socket Details" sheet.
4. The bend in the bottom connection PL shall be centered on the side connection PL.
5. For other shim notes see "Suspender Bracket Details No. 3" sheet.
6. For weld size see "Suspender Bracket Details No. 3" sheet.

LEGEND:

D_T = Diameter of Opening at top of Suspender Socket (see Note 3)

REGISTERED PROFESSIONAL ENGINEER Daniel J. Turner No. C 65033 Exp. 06/30/07 CIVIL STATE OF CALIFORNIA

FOR REVISIONS ONLY

MARK	DATE	DESCRIPTIONS	BY	CH'D	CCO#
1	04/16/07	CABLE SYSTEM	GB	DT	37

REVISIONS

CONTRACT CHANGE ORDER NO. 37SO
SHEET 13 OF 24

ALL DIMENSIONS ARE IN MILLIMETERS UNLESS OTHERWISE SHOWN

R. Valizadeh/V. Toan/Y.L./W.L./F.C.
DESIGN OVERSIGHT
SIGN OFF DATE 04/16/07

DESIGN	BY G. Baker	CHECKED T. McMeans	
DETAILS	BY S. Camo	CHECKED P. Ritchie	
QUANTITIES	BY C. Mauch	CHECKED C. Mibelli	

PREPARED FOR THE STATE OF CALIFORNIA DEPARTMENT OF TRANSPORTATION

R. Manzanarez
PROJECT ENGINEER

BRIDGE NO. 34-0006L/R
KILOMETER POST 13.2/13.9

SAN FRANCISCO OAKLAND BAY BRIDGE
EAST SPAN SEISMIC SAFETY PROJECT
SELF-ANCHORED SUSPENSION BRIDGE
(SUPERSTRUCTURE & TOWER)

SUSPENDER BRACKET DETAILS NO. 2

Rev. Date: 5-18-98

ORIGINAL SCALE IN MILLIMETERS FOR REDUCED PLANS 0 10 20 30 40 50 60 70 80 90 100

CU 04
EA 0120F1

DISREGARD PRINTS BEARING EARLIER REVISION DATES

REVISION DATES (PRELIMINARY STAGE ONLY) 05/05/99 06/08/99 05/31/01 01/08/02 07/01/02 12/19/02

SHEET 331R OF

FILE => I:\bb\04-012001\sas\contract plans and cco\cco\in progress\cco#37\dgn\cagsadlla.dgn

100 % PS&E

USERNAME => ptom DATE PLOTTED => 13 AUG 2007 TIME PLOTTED => 10:35:01

MARK	DATE	DESCRIPTIONS	BY	CH'D	CCO#
1	04/16/07	CABLE SYSTEM	GB	DT	37

REVISIONS

CONTRACT CHANGE ORDER NO. 37 SO
SHEET 14 OF 24

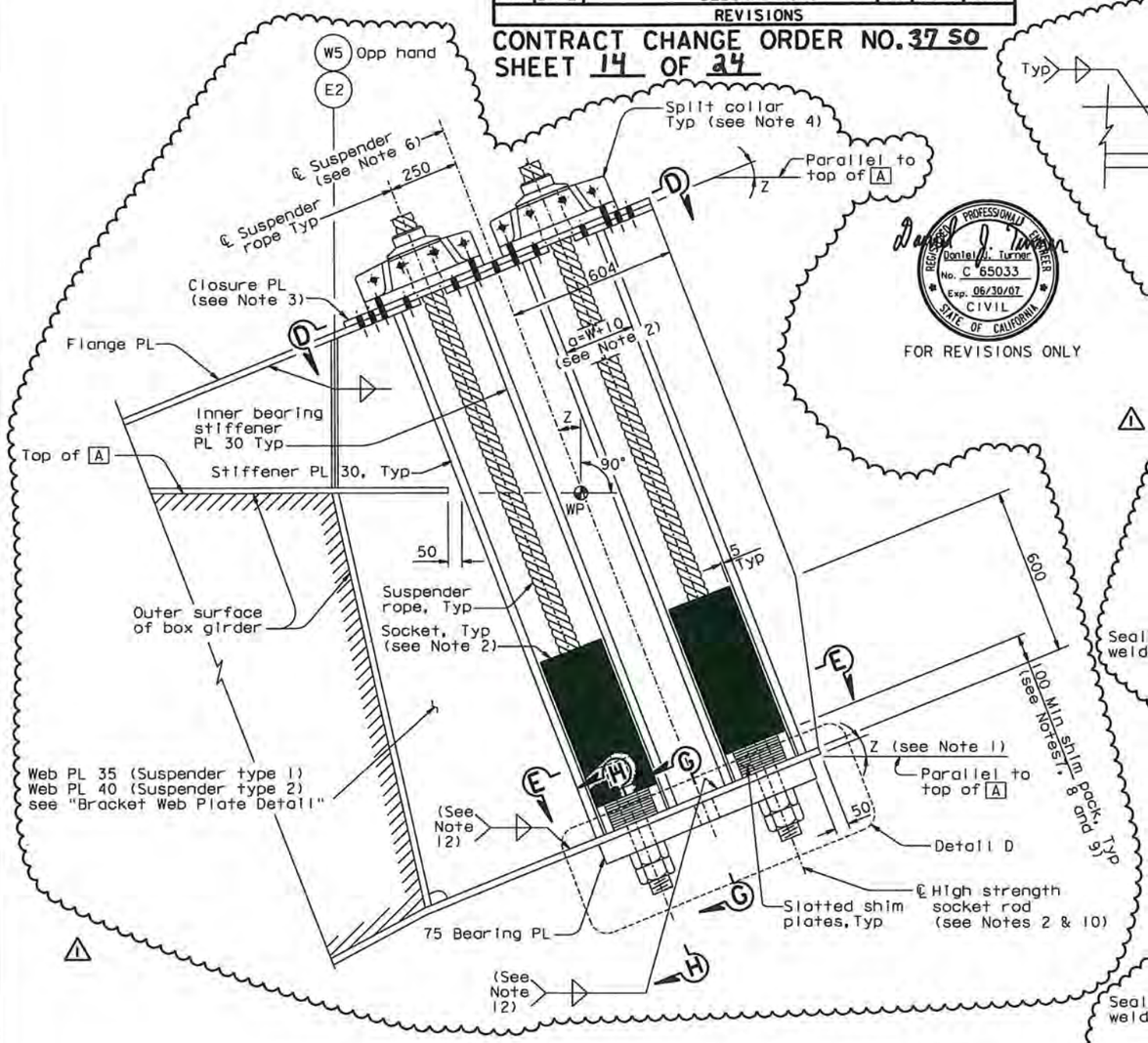

4 SUSPENDER ANCHORAGE
DETAIL C
1:10

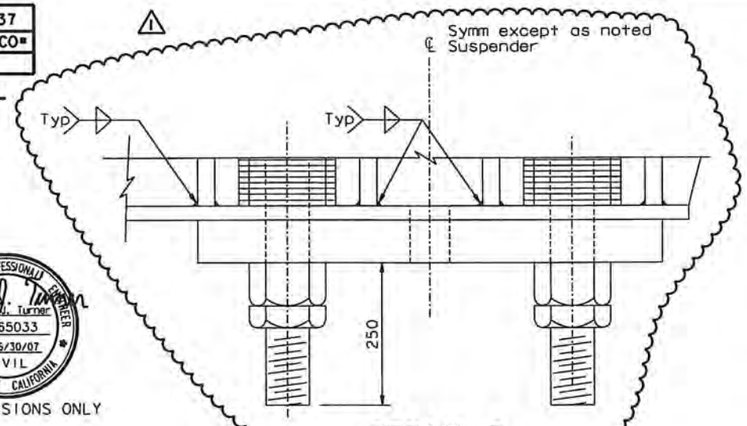

DETAIL D
1:5

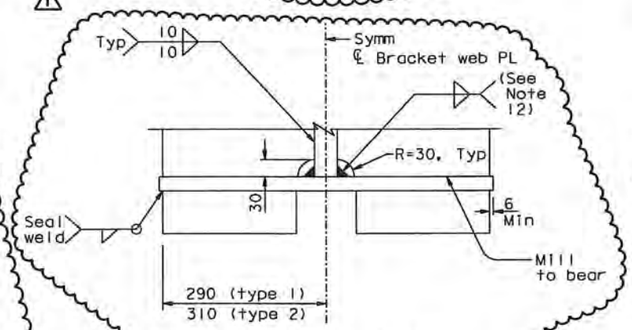

SECTION G-G
1:5

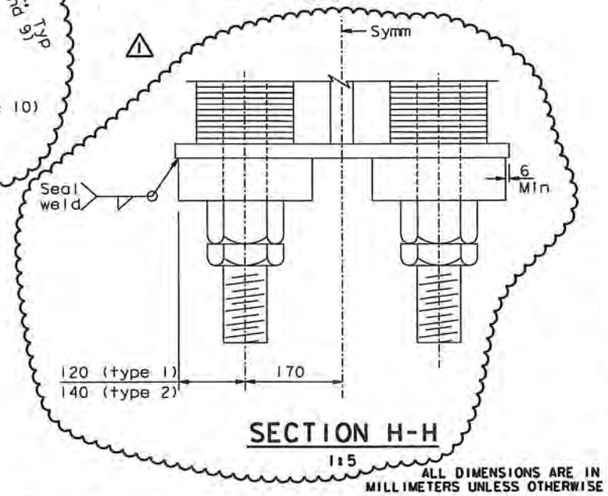

SECTION H-H
1:5

ALL DIMENSIONS ARE IN MILLIMETERS UNLESS OTHERWISE SHOWN

4 REVISED PER ADDENDUM NO. 4 DATED DECEMBER 9, 2005

Caltrans Metric

DIST.	COUNTY	ROUTE	KILOMETER POST TOTAL PROJECT	SHEET NO.	TOTAL SHEETS
04	SF	80	13.2/13.9	749R1	1204

George Baker
REGISTERED ENGINEER - CIVIL
12-6-04
PLANS APPROVAL DATE

REGISTERED PROFESSIONAL ENGINEER George S. Baker No. C 57112 Exp. 12/31/05 CIVIL STATE OF CALIFORNIA

The State of California or its officers or agents shall not be responsible for the accuracy or completeness of electronic copies of this plan sheet.

T.Y. LIN / MOFFATT & NICHOL
825 BATTERY STREET
SAN FRANCISCO, CA 94111

Caltrans now has a web site! To get to the web site, go to: http://www.dot.ca.gov

REGISTERED PROFESSIONAL ENGINEER Daniel J. Turner No. C 65033 Exp. 06/30/07 CIVIL STATE OF CALIFORNIA
FOR REVISIONS ONLY

LEGEND:

W	Width of Suspender Socket Base
Y	Total thickness of shim plates and anchor plate
	Suspender Socket (see Note 2)
WP	Working Point (see Note 5)
A	Girder Face A

NOTES:

1. For Z and location of suspender types 1 and 2, see "Suspender Layout" sheets. Angles Z are measured with respect to the top of A.
2. For suspender socket details, see "Suspender Socket Details" sheet.
3. For closure plate details, see "Suspender Bracket Details No. 4" sheet.
4. For split collar details, see "Suspender Bracket Details No. 5" sheet.
5. For Working Point details, see "Suspender Layout No. 1" sheet.
6. Suspender ℄ varies with bracket location. Cutouts and bolts in flange PL shall be placed with respect to suspender ℄.
7. The Contractor shall provide the specified shim pack thickness for erection adjustment as directed by the Engineer, and to provide future tension adjustment for a LRT. The Contractor may add additional shims as part of his fabrication methods, subject to approval by the Engineer.
8. 150 mm shim pack shall be provided at PP70 through PP102.
9. Shim plate thickness shall be 10 mm each.
10. The diameter of holes in bearing plate for socket rods shall be 4 mm greater than the rod diameter.
11. Socket rods shall be prestressed to 0.5 Fy.
12. Fillet weld size shall be 10 mm for type 1 suspender brackets and shall be 15 mm for type 2 suspender brackets.

SAN FRANCISCO OAKLAND BAY BRIDGE
EAST SPAN SEISMIC SAFETY PROJECT
SELF-ANCHORED SUSPENSION BRIDGE
(SUPERSTRUCTURE & TOWER)

SUSPENDER BRACKET DETAILS NO. 3

R. Vollzadeh/V. Toan/Y.L./W.L./F.C.
DESIGN OVERSIGHT
SIGN OFF DATE 04/16/07

	BY	CHECKED
DESIGN	G. Baker	T. McMeans
DETAILS	S. Como	P. Ritchie
QUANTITIES	C. Mauch	C. Mibell

PREPARED FOR THE STATE OF CALIFORNIA DEPARTMENT OF TRANSPORTATION

R. Manzanarez
PROJECT ENGINEER

BRIDGE NO. 34-0006L/R
KILOMETER POST 13.2/13.9

CU 04
EA 0120F1

DISREGARD PRINTS BEARING EARLIER REVISION DATES

REVISION DATES (PRELIMINARY STAGE ONLY) 05/05/99 06/30/99 03/31/00 04/30/02 07/31/02 12/13/02 11/13/05

SHEET 332R1 OF

Rev. Date: 5-18-98

ORIGINAL SCALE IN MILLIMETERS FOR REDUCED PLANS 0 10 20 30 40 50 60 70 80 90 100

FILE => I:\bb\04-01200I\sas\contract plans and cco\cco\In progress\cco#37\dgn\cagsad12.dgn

USERNAME => ptom DATE PLOTTED => 21 MAY 2007 TIME PLOTTED => 11:46:14

100 % PS&E

Caltrans now has a web site! To get to the web site, go to: http://www.dot.ca.gov

DIST.	COUNTY	ROUTE	KILOMETER POST TOTAL PROJECT	SHEET NO.	TOTAL SHEETS
04	SF	80	13.2/13.9	750R1	1204

George Baker
REGISTERED ENGINEER - CIVIL
12-6-04
PLANS APPROVAL DATE

REGISTERED PROFESSIONAL ENGINEER George S. Baker No. C 57112 Exp. 12/31/05 CIVIL STATE OF CALIFORNIA

The State of California or its officers or agents shall not be responsible for the accuracy or completeness of electronic copies of this plan sheet.

T.Y. LIN / MOFFATT & NICHOL
825 BATTERY STREET
SAN FRANCISCO, CA 94111

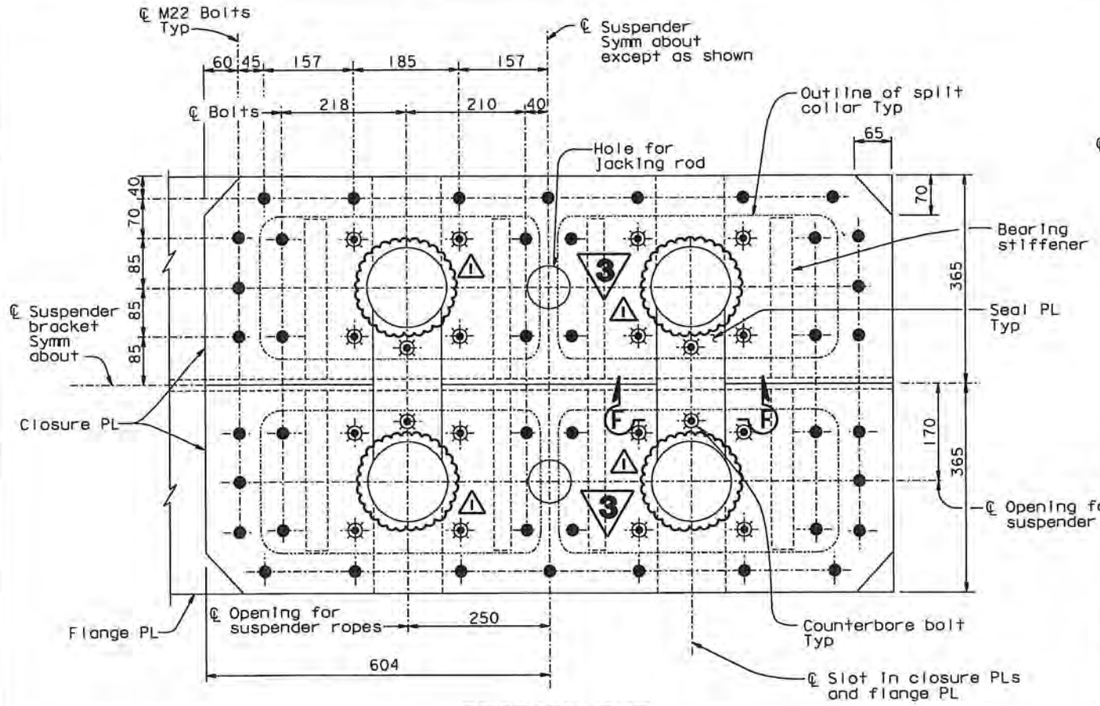

SECTION D-D
1:5

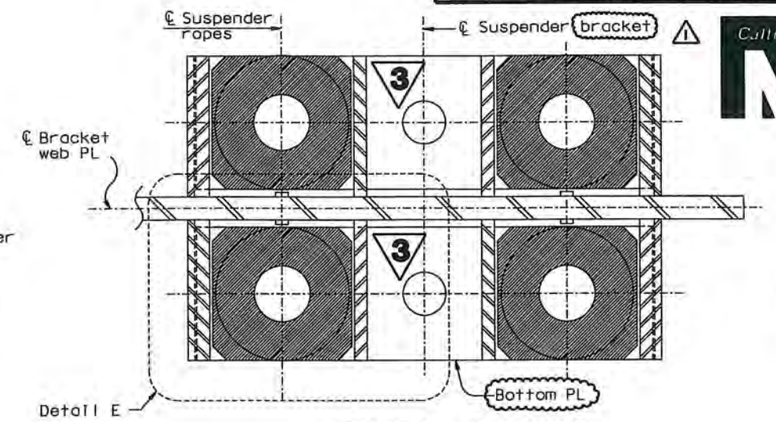

SECTION E-E
1:5

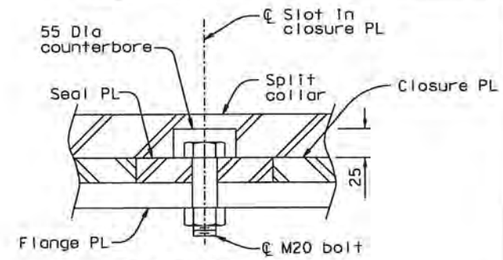

SECTION F-F
1:2.5

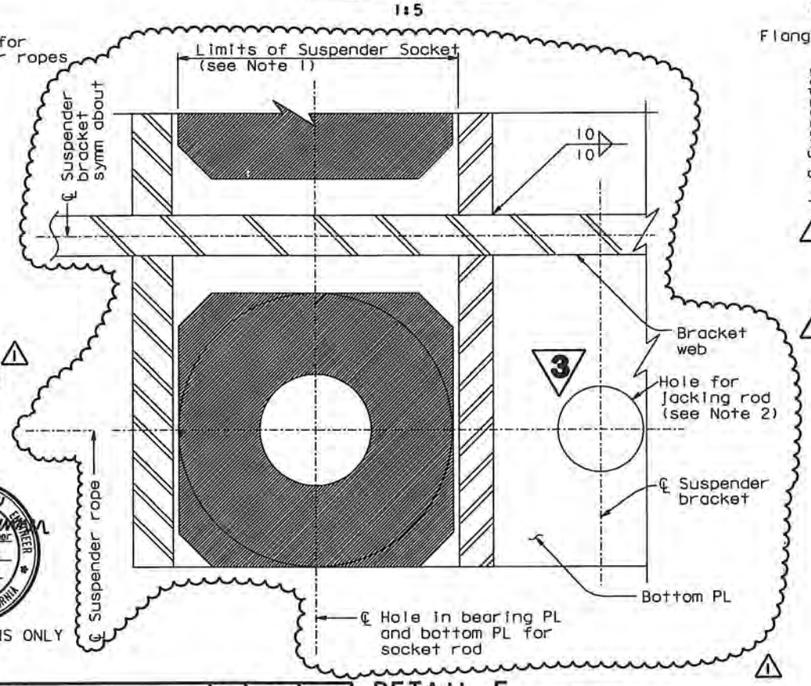

DETAIL E
1:2.5

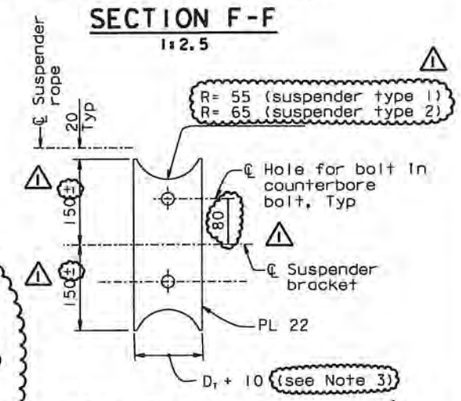

SEAL PLATE DETAIL
1:5

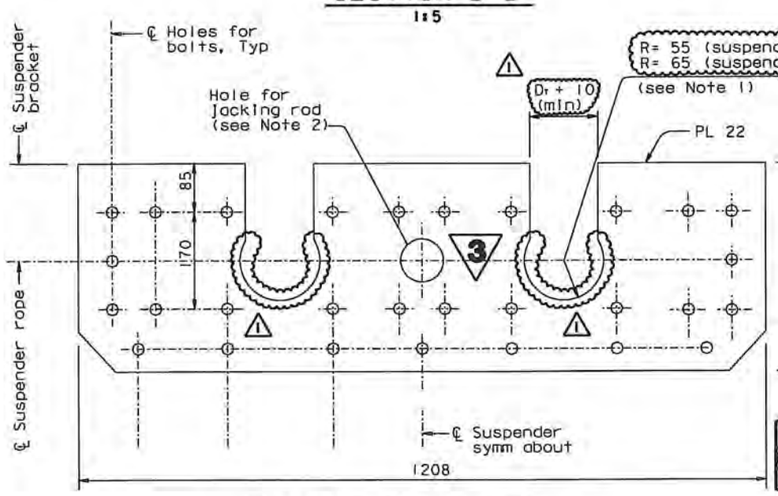

CLOSURE PLATE DETAIL
1:5

Note: Zero gap between closure plates at the centerline

365

Daniel J. Turner
REGISTERED PROFESSIONAL ENGINEER Daniel J. Turner No. C 65033 Exp. 06/30/07 CIVIL STATE OF CALIFORNIA
FOR REVISIONS ONLY

LEGEND:

D_T = Diameter of Opening at Top of Suspender Socket (see Note 1)

W = Width of Suspender Socket Base (see Note 1)

Suspender Socket (see Note 1)

NOTES:

1. For suspender socket details, see "Suspender Socket Details" sheet.
2. Jacking rod holes are to be provided for future suspender shimming and replacement. Holes shall have 75 mm diameter for type 1 suspender brackets and 95 mm diameter for type 2 suspender brackets. The Contractor may use these holes in his operations and provide additional holes, subject to review and approval by the Engineer. Additional holes shall be plugged by means approved by the Engineer.
3. The seal plate may be fabricated at a width reduced by 2 mm, provided that the seal plate is seated with caulk in the gap with the closure plate.

MARK	DATE	DESCRIPTIONS	BY	CH'D	CCO#
1	04/16/07	CABLE SYSTEM	GB	DT	37

REVISIONS

CONTRACT CHANGE ORDER NO. 37 SO
SHEET 15 OF 24

3 REVISED PER ADDENDUM NO. 3 DATED NOVEMBER 7, 2005

ALL DIMENSIONS ARE IN MILLIMETERS UNLESS OTHERWISE SHOWN

R. Vailzadeh/V. Toan/Y.L./W.L./F.C.
DESIGN OVERSIGHT
SIGN OFF DATE 04/16/07

DESIGN	BY G. Baker	CHECKED T. McMeans	
DETAILS	BY S. Como	CHECKED P. Ritchie	
QUANTITIES	BY C. Mauch	CHECKED C. Mibelli	

PREPARED FOR THE STATE OF CALIFORNIA DEPARTMENT OF TRANSPORTATION

R. Manzanarez
PROJECT ENGINEER

BRIDGE NO. 34-0006L/R
KILOMETER POST 13.2/13.9

SAN FRANCISCO OAKLAND BAY BRIDGE
EAST SPAN SEISMIC SAFETY PROJECT
SELF-ANCHORED SUSPENSION BRIDGE (SUPERSTRUCTURE & TOWER)

SUSPENDER BRACKET DETAILS NO. 4

Rev. Date: 5-18-98

ORIGINAL SCALE IN MILLIMETERS FOR REDUCED PLANS 0 10 20 30 40 50 60 70 80 90 100

CU 04
EA 0120F1

DISREGARD PRINTS BEARING EARLIER REVISION DATES

REVISION DATES (PRELIMINARY STAGE ONLY) 03/29/06 06/29/06 09/29/06 01/29/06 12/29/06 10/13/05

SHEET 333R1 OF

FILE -> I:\bb\04-012001\sos\contract plans and cco\cco\in progress\cco#37\dgn\cagsad12a.dgn

USERNAME -> dtom DATE PLOTTED -> 24 APR 2007 TIME PLOTTED -> 11:37:03

100 % PS&E

DIST.	COUNTY	ROUTE	KILOMETER POST TOTAL PROJECT	SHEET NO.	TOTAL SHEETS
04	SF	80	13.2/13.9	751R1	1204

George Baker
REGISTERED ENGINEER - CIVIL
12-6-04
PLANS APPROVAL DATE

The State of California or its officers or agents shall not be responsible for the accuracy or completeness of electronic copies of this plan sheet.

REGISTERED PROFESSIONAL ENGINEER George S. Baker No. C 57112 Exp. 12/31/05 CIVIL STATE OF CALIFORNIA

T.Y. LIN / MOFFATT & NICHOL
825 BATTERY STREET
SAN FRANCISCO, CA 94111

Caltrans now has a web site! To get to the web site, go to: http://www.dot.ca.gov

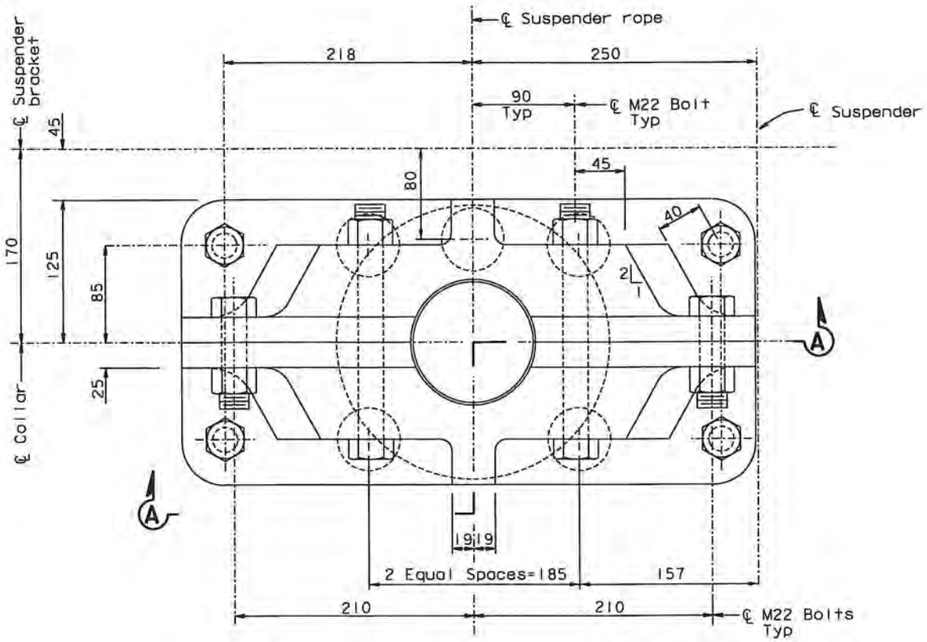

PLAN

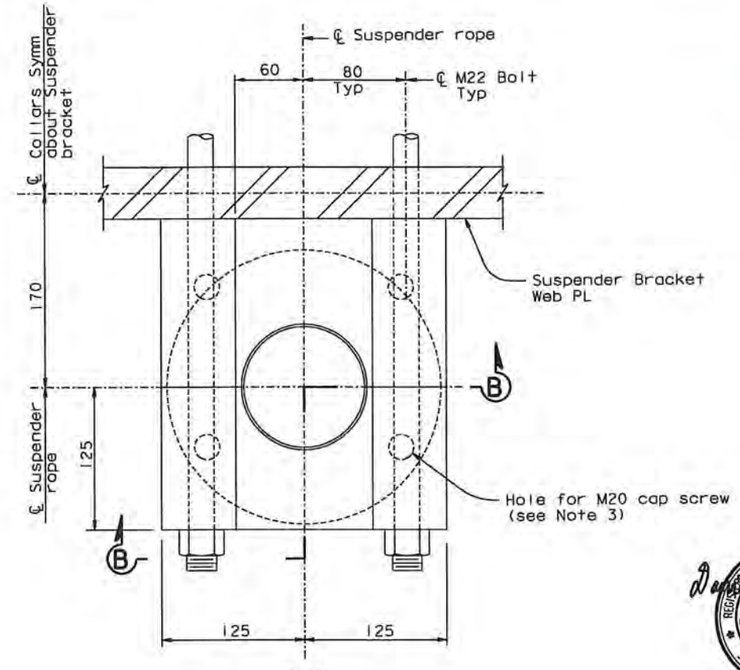

PLAN

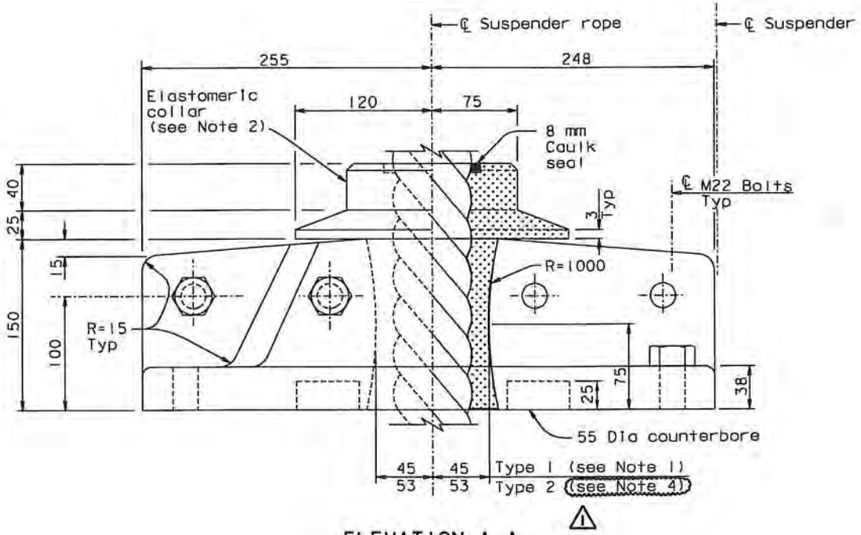

ELEVATION A-A

SPLIT COLLAR DETAIL

1:2.5

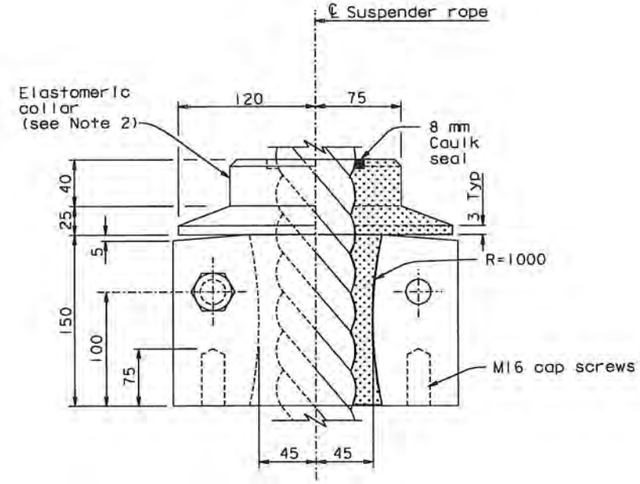

ELEVATION B-B

SPLIT COLLAR DETAIL

AT PANEL POINTS 104 TO 110

1:2.5

REGISTERED PROFESSIONAL ENGINEER Daniel J. Turner No. C 65033 Exp. 06/30/07 CIVIL STATE OF CALIFORNIA

FOR REVISIONS ONLY

MARK	DATE	DESCRIPTIONS	BY	CH'D	CCO#
1	04/16/07	CABLE SYSTEM	GB	DT	37

REVISIONS

CONTRACT CHANGE ORDER NO. 37 SO
SHEET 16 OF 24

LEGEND:

Elastomeric collar in section

NOTES:

1. For location of suspender types, see "Suspender Layout No. 1" sheet.
2. Elastomeric collars shall be polyurethane, durometer 60, molded to fit suspender ropes.
3. Holes shall match those of seat plate detail, see "Suspender Bracket No. 6" sheet.
4. Collar dimension shown is for a 90 mm suspender rope size. If larger rope size is used, the dimension shall be equal to the rope radius plus 8 mm.

ALL DIMENSIONS ARE IN MILLIMETERS UNLESS OTHERWISE SHOWN

SAN FRANCISCO OAKLAND BAY BRIDGE
EAST SPAN SEISMIC SAFETY PROJECT
SELF-ANCHORED SUSPENSION BRIDGE
(SUPERSTRUCTURE & TOWER)

SUSPENDER BRACKET DETAILS NO. 5

R. Valizadeh/V. Toan/Y.L./W.L./F.C.
DESIGN OVERSIGHT
SIGN OFF DATE 04/16/07
Rev. Date: 5-18-98

	BY	CHECKED
DESIGN	G. Baker	T. McMeans
DETAILS	S. Camo	P. Ritchie
QUANTITIES	C. Mauch	C. Mibelli

PREPARED FOR THE STATE OF CALIFORNIA DEPARTMENT OF TRANSPORTATION

R. Manzanarez
PROJECT ENGINEER

BRIDGE NO. 34-0006L/R
KILOMETER POST 13.2/13.9

ORIGINAL SCALE IN MILLIMETERS FOR REDUCED PLANS 0 10 20 30 40 50 60 70 80 90 100

CU 04
EA 0120F1

DISREGARD PRINTS BEARING EARLIER REVISION DATES

REVISION DATES (PRELIMINARY STAGE ONLY) 05/15/99 08/02/99 05/31/01 04/08/02 07/01/02 12/15/02

SHEET 334R1 OF

FILE => I:\bb\04-01200I\sas\contract plans and cco\cco\in progress\cco#37\dgn\cagsad12b.dgn

USERNAME => ptom DATE PLOTTED => 24 APR 2007 TIME PLOTTED => 11:38:08

100 % PS&E

DIST.	COUNTY	ROUTE	KILOMETER POST TOTAL PROJECT	SHEET NO.	TOTAL SHEETS
04	SF	80	13.2/13.9	752R1	1204

George Baker
REGISTERED ENGINEER - CIVIL
12-6-04
PLANS APPROVAL DATE
The State of California or its officers or agents shall not be responsible for the accuracy or completeness of electronic copies of this plan sheet.
REGISTERED PROFESSIONAL ENGINEER George S. Baker No. C 57112 Exp. 12/31/05 CIVIL STATE OF CALIFORNIA

Caltrans Metric

T.Y. LIN / MOFFATT & NICHOL
825 BATTERY STREET
SAN FRANCISCO, CA 94111

Caltrans now has a web site! To get to the web site, go to: http://www.dot.ca.gov

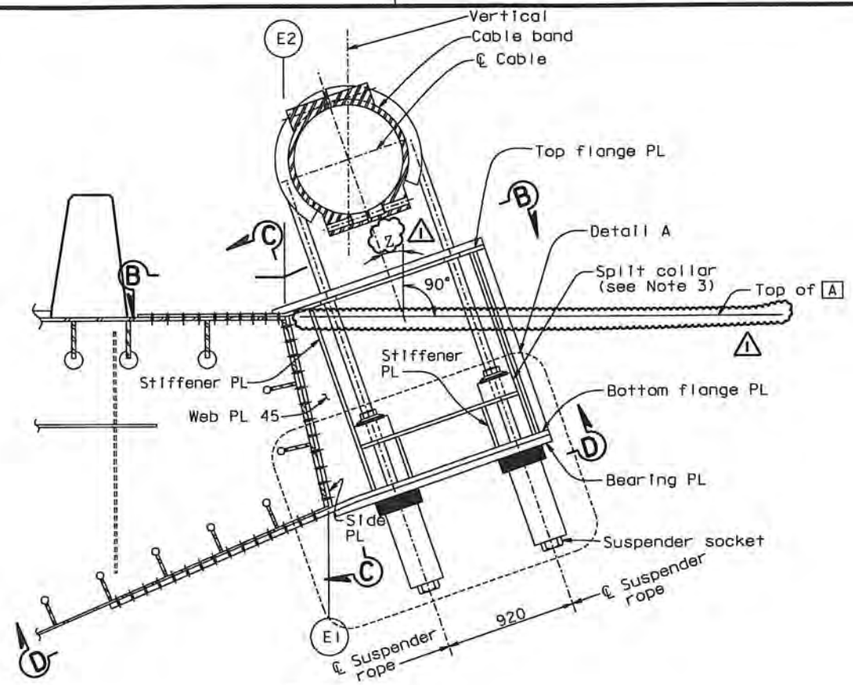

ELEVATION
SUSPENDER BRACKET AT PP 104, 106, 108, 110
1:20

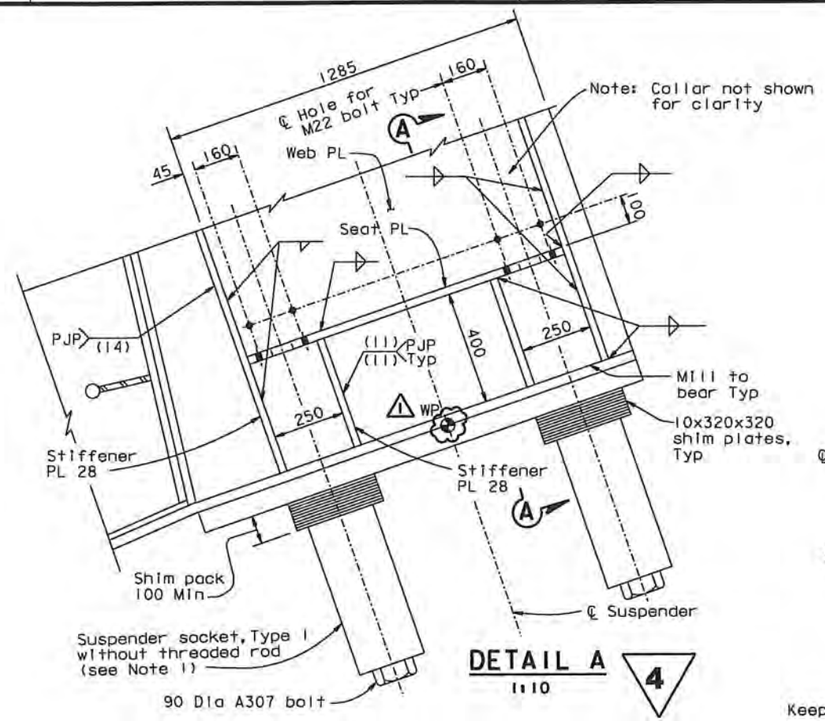

DETAIL A
1:10

4

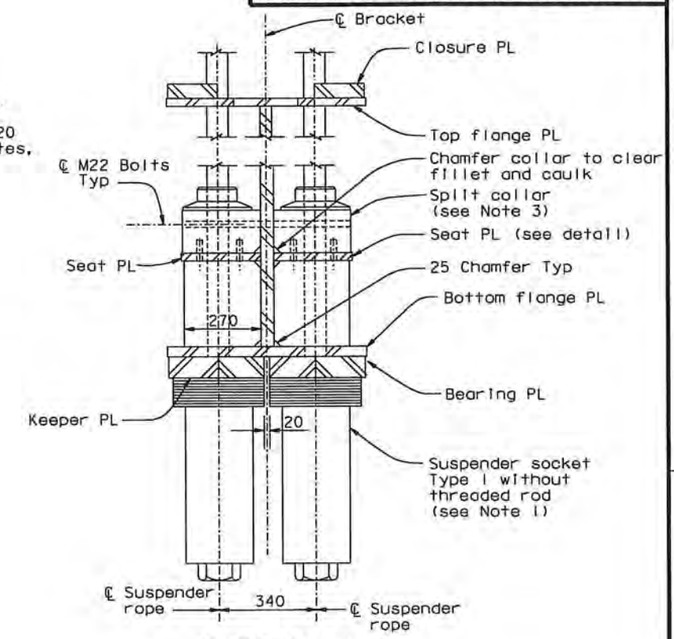

SECTION A-A
1:10

MARK	DATE	DESCRIPTIONS	BY	CH'D	CCO#
1	04/16/07	CABLE SYSTEM	GB	DT	37

REVISIONS

CONTRACT CHANGE ORDER NO. 37 SO
SHEET 17 OF 24

REGISTERED PROFESSIONAL ENGINEER Daniel J. Turner No. C 65033 Exp. 06/30/07 CIVIL STATE OF CALIFORNIA
FOR REVISIONS ONLY

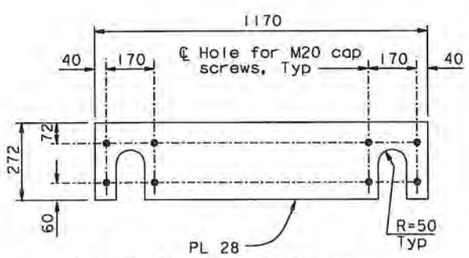

SEAT PLATE DETAIL
1:10

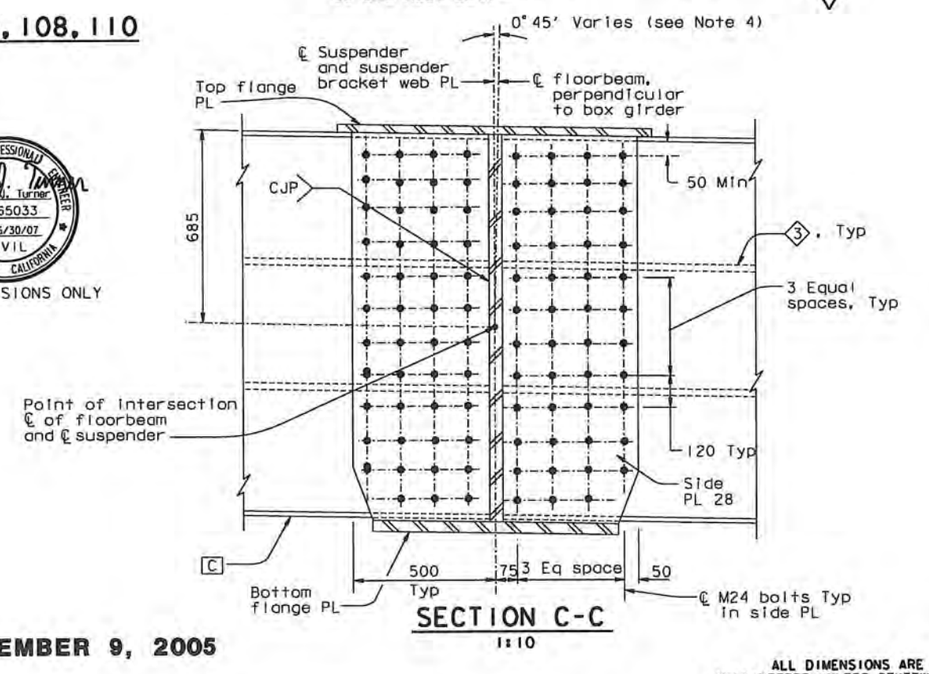

SECTION C-C
1:10

LEGEND:

3 Girder stiffener Type 3

C Girder face C

NOTES:

1. Threaded rod may be used for erection. After installation of suspender socket, ends shall be sealed with 90 Dia A307 bolts.
2. For details not shown, see "Suspender Bracket Details No. 1" through "Suspender Bracket Details No. 3" sheets.
3. For split collar details, see "Suspender Bracket Details No. 5" sheet.
4. The Contractor shall consider variation in roadway grade in his details.

4 REVISED PER ADDENDUM NO. 4 DATED DECEMBER 9, 2005

ALL DIMENSIONS ARE IN MILLIMETERS UNLESS OTHERWISE SHOWN

SAN FRANCISCO OAKLAND BAY BRIDGE
EAST SPAN SEISMIC SAFETY PROJECT
SELF-ANCHORED SUSPENSION BRIDGE
(SUPERSTRUCTURE & TOWER)
SUSPENDER BRACKET DETAILS NO. 6

R. Vaiizadeh/V. Toan/Y.L./W.L./F.C.
DESIGN OVERSIGHT
Roger Vaiizadeh / Vang Toan / Y. Lee
SIGN OFF DATE 04/16/07

	BY	CHECKED	
DESIGN	G. Baker	T. McMeans	
DETAILS	S. Cano	P. Ritchie	
QUANTITIES	C. Mauch	C. Mibelli	

PREPARED FOR THE STATE OF CALIFORNIA DEPARTMENT OF TRANSPORTATION

R. Manzanarez
PROJECT ENGINEER

BRIDGE NO. 34-0006L/R
KILOMETER POST 13.2/13.9
CU 04
EA 0120F1

DISREGARD PRINTS BEARING EARLIER REVISION DATES
REVISION DATES (PRELIMINARY STAGE ONLY) 01/05/99 03/05/99 03/01/01 03/05/02 07/01/02 12/09/02 11/13/05
SHEET 335R1 OF

Rev. Date: 5-18-98
ORIGINAL SCALE IN MILLIMETERS FOR REDUCED PLANS 0 10 20 30 40 50 60 70 80 90 100

FILE => I:\bb\04-012001\sas\contract plans and cco\cco\in progress\cco#37\dgn\cagsad13.dgn

100 % PS&E
DATE PLOTTED => 24 APR 2007 TIME PLOTTED => 11:39:16
USERNAME => ptam

DIST.	COUNTY	ROUTE	KILOMETER POST TOTAL PROJECT	SHEET NO.	TOTAL SHEETS
04	SF	80	13.2/13.9	753R1	1204

Caltrans Metric

George Baker
REGISTERED ENGINEER - CIVIL
12-6-04
PLANS APPROVAL DATE

REGISTERED PROFESSIONAL ENGINEER George S. Baker No. C 57112 Exp. 12/31/05 CIVIL STATE OF CALIFORNIA

The State of California or its officers or agents shall not be responsible for the accuracy or completeness of electronic copies of this plan sheet.

T.Y. LIN / MOFFATT & NICHOL
825 BATTERY STREET
SAN FRANCISCO, CA 94111

Caltrans now has a web site! To get to the web site, go to: http://www.dot.ca.gov

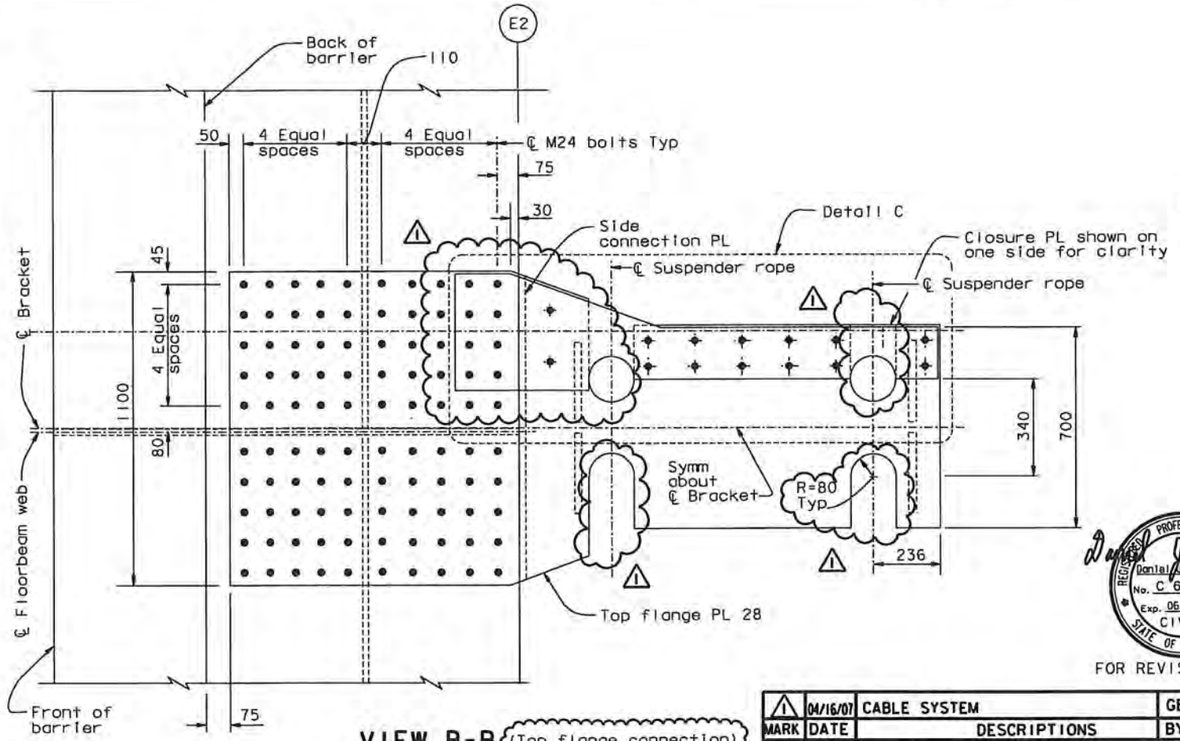

VIEW B-B (Top flange connection)
1:10

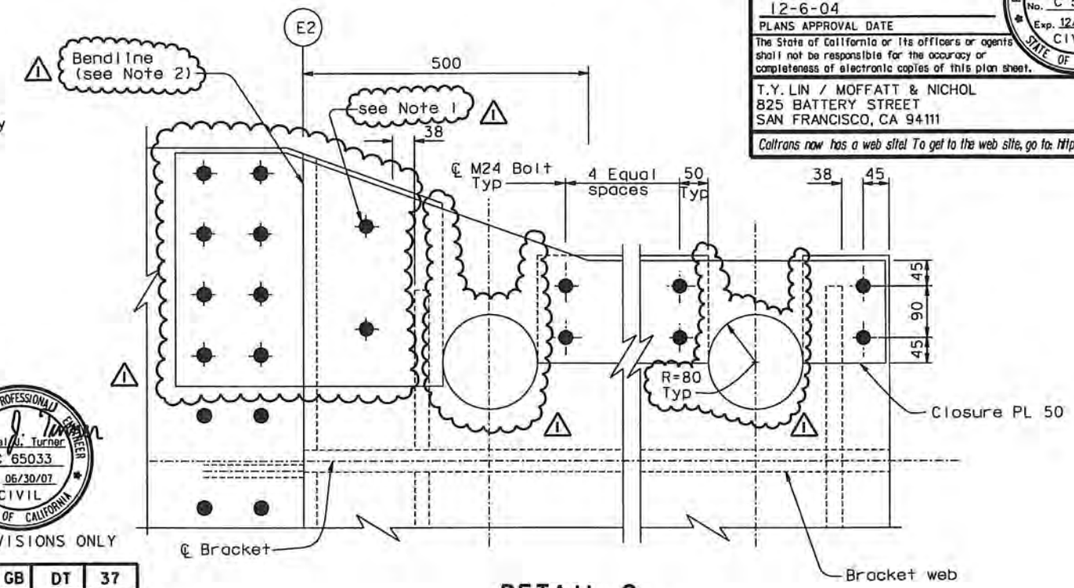

DETAIL C
1:5

FOR REVISIONS ONLY

MARK	DATE	DESCRIPTIONS	BY	CH'D	CCO#
1	04/16/07	CABLE SYSTEM	GB	DT	37

REVISIONS

CONTRACT CHANGE ORDER NO. 37 SO
SHEET 18 OF 24

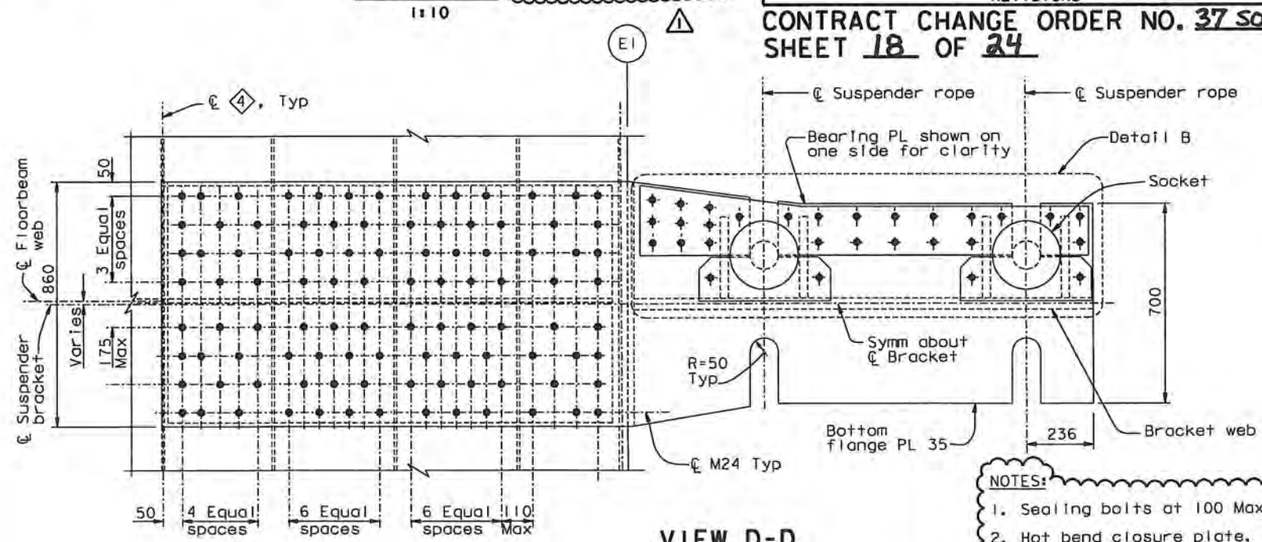

VIEW D-D
1:10

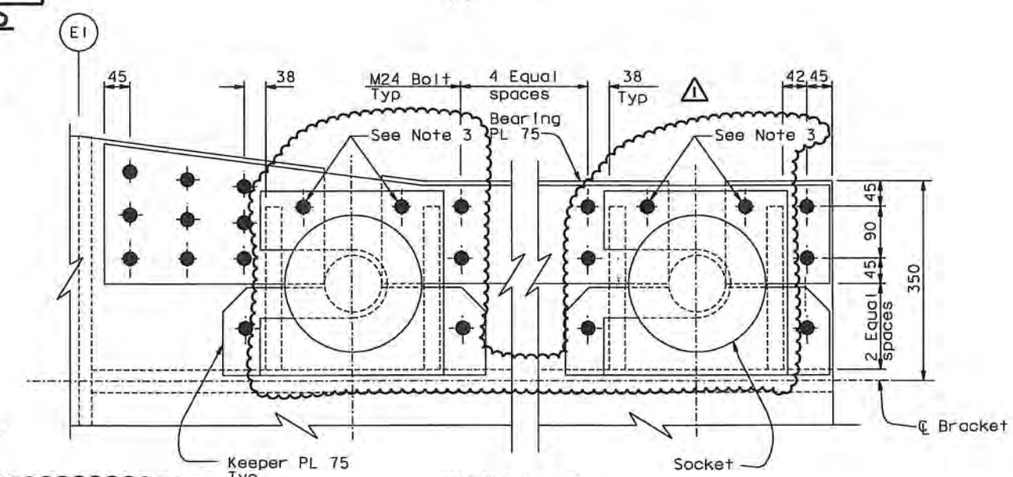

DETAIL B
1:5

NOTES:
1. Sealing bolts at 100 Max spacing as required.
2. Hot bend closure plate. Caulking shall be used under the bend line to fill gap between plates.
3. Bolts interfering with shims shall be installed in 40 mm deep counter bores in the bearing PL 75.

ALL DIMENSIONS ARE IN MILLIMETERS UNLESS OTHERWISE SHOWN

100 % PS&E

DATE PLOTTED => 24 APR 2007 TIME PLOTTED => 11:40:12

USERNAME => ptrom

R. Vallzadeh/V. Toan/Y.L./W.L./F.C.
DESIGN OVERSIGHT
SIGN OFF DATE 04/16/07

	BY	CHECKED
DESIGN	G. Baker	T. McMeans
DETAILS	S. Como	P. Ritchie
QUANTITIES	C. Mauch	C. Mibelli

PREPARED FOR THE STATE OF CALIFORNIA DEPARTMENT OF TRANSPORTATION

R. Manzanarez
PROJECT ENGINEER

BRIDGE NO. 34-0006L/R
KILOMETER POST 13.2/13.9

SAN FRANCISCO OAKLAND BAY BRIDGE
EAST SPAN SEISMIC SAFETY PROJECT
SELF-ANCHORED SUSPENSION BRIDGE
(SUPERSTRUCTURE & TOWER)
SUSPENDER BRACKET DETAILS NO. 7

Rev. Date: 5-18-98

ORIGINAL SCALE IN MILLIMETERS FOR REDUCED PLANS 0 10 20 30 40 50 60 70 80 90 100

CU 04
EA 0120F1

DISREGARD PRINTS BEARING EARLIER REVISION DATES

REVISION DATES (PRELIMINARY STAGE ONLY) 05/05/06 06/06/06 09/06/06 01/06/06 01/24/06 12/15/06

SHEET 336R1 OF

FILE => I:\bb\04-012001\sas\contract plans and cco\cco\in progress\cco#37\dgn\cagsad13a.dgn

DIST.	COUNTY	ROUTE	KILOMETER POST TOTAL PROJECT	SHEET NO.	TOTAL SHEETS
04	SF	80	13.2/13.9	762R	1204

Caltrans Metric

George Baker
REGISTERED ENGINEER - CIVIL
12-6-04
PLANS APPROVAL DATE

REGISTERED PROFESSIONAL ENGINEER George S. Baker No. C 57112 Exp. 12/31/05 CIVIL STATE OF CALIFORNIA

The State of California or its officers or agents shall not be responsible for the accuracy or completeness of electronic copies of this plan sheet.

T.Y. LIN / MOFFATT & NICHOL
825 BATTERY STREET
SAN FRANCISCO, CA 94111

To get to the web site, go to: http://www.dot.ca.gov

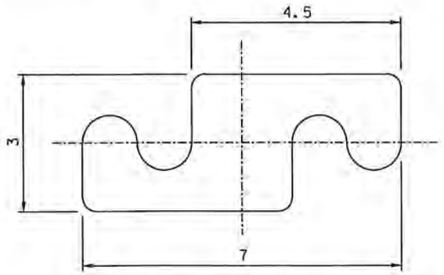

S-SHAPED WRAPPING WIRE
10:1

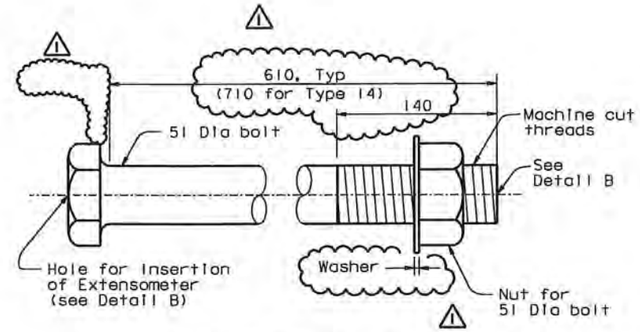

CABLE BAND BOLT
1:2.5

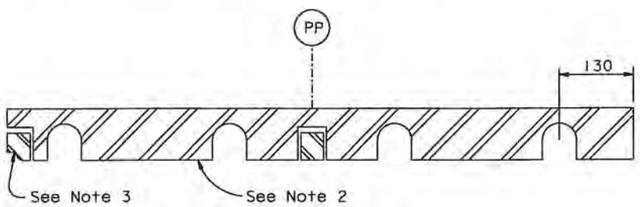

SECTION C-C
1:5

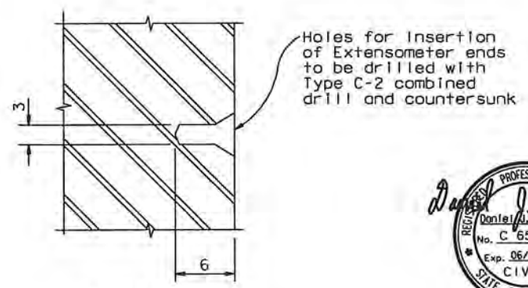

DETAIL B
NTS

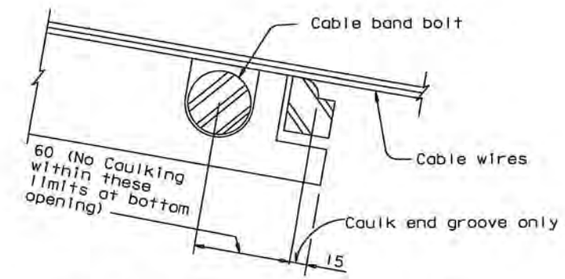

LOWER END CAULKING DETAIL
NTS

REGISTERED PROFESSIONAL ENGINEER Daniel J. Turner No. C 65033 Exp. 06/30/07 CIVIL STATE OF CALIFORNIA

FOR REVISIONS ONLY

MARK	DATE	DESCRIPTIONS	BY	CH'D	CCO#
1	04/16/07	CABLE SYSTEM	GB	DT	37

REVISIONS

CONTRACT CHANGE ORDER NO. 37 SO
SHEET 19 OF 24

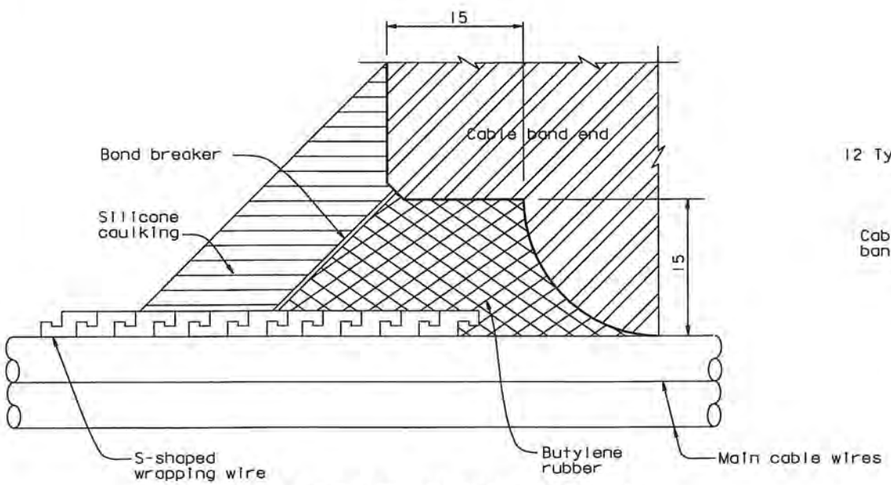

CAULKING GROOVE DETAIL
NTS

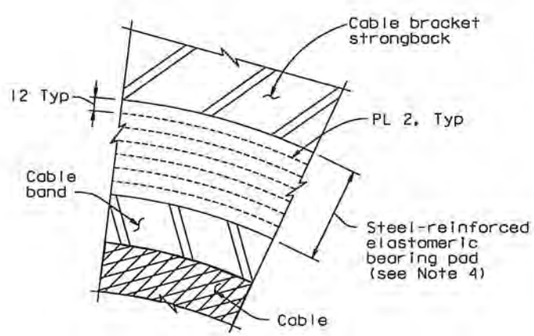

DETAIL A
1:2.5

NOTES:

1. For cable band bolts installation tension shall be 1.0 MN per bolt.
2. For typical details not shown, see "Cable Band Details No. 3" sheet.
3. For other caulking groove details, see "Cable Band Details No. 3" sheet.
4. Elastomeric bearing pad shall be vulcanized to both the strongback and the cable band.
5. For cable band bolt material, see "General Notes" sheets.

100 % PS&E

ALL DIMENSIONS ARE IN MILLIMETERS UNLESS OTHERWISE SHOWN

SAN FRANCISCO OAKLAND BAY BRIDGE
EAST SPAN SEISMIC SAFETY PROJECT
SELF-ANCHORED SUSPENSION BRIDGE
(SUPERSTRUCTURE & TOWER)

CABLE BAND DETAILS NO. 5

R. Valizadeh/V. Toan/Y.L./W.L./F.C.
DESIGN OVERSIGHT
Reza Valizadeh / Vong Toan / Y. Lu
SIGN OFF DATE 04/16/07
Rev. Date: 5-18-98

	BY	CHECKED
DESIGN	G. Baker	T. McMeans
DETAILS	S. Camo	P. Ritchie
QUANTITIES	C. Mauch	C. Mibelli

PREPARED FOR THE STATE OF CALIFORNIA DEPARTMENT OF TRANSPORTATION

R. Manzanarez
PROJECT ENGINEER

BRIDGE NO. 34-0006L/R
KILOMETER POST 13.2/13.9

ORIGINAL SCALE IN MILLIMETERS FOR REDUCED PLANS 0 10 20 30 40 50 60 70 80 90 100

CU 04
EA 0120F1

DISREGARD PRINTS BEARING EARLIER REVISION DATES

REVISION DATES (PRELIMINARY STAGE ONLY) 05/15/99 08/02/99 05/21/01 04/06/02 07/01/02 12/19/02

SHEET 345R OF

FILE => I:\bb\04-012001\sas\contract plans and cco\cco\in progress\cco#37\dgn\cagcbd05.dgn

USERNAME => ptom DATE PLOTTED => 24 APR 2007 TIME PLOTTED => 11:42:00

DIST.	COUNTY	ROUTE	KILOMETER POST TOTAL PROJECT	SHEET NO.	TOTAL SHEETS
04	SF	80	13.2/13.9	813R1	1204

Caltrans Metric

REGISTERED ENGINEER - CIVIL

12-6-04

PLANS APPROVAL DATE

REGISTERED PROFESSIONAL ENGINEER Marwan N. Nader No. C 054426 Exp. 12/31/07 CIVIL STATE OF CALIFORNIA

The State of California or its officers or agents shall not be responsible for the accuracy or completeness of electronic copies of this plan sheet.

T.Y. LIN / MOFFATT & NICHOL
825 BATTERY STREET
SAN FRANCISCO, CA 94111

Caltrans now has a web site! To get to the web site, go to: http://www.dot.ca.gov

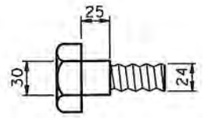

SHOULDER BOLT DETAIL

1:2.5
(At panel point 8 and 104 only)

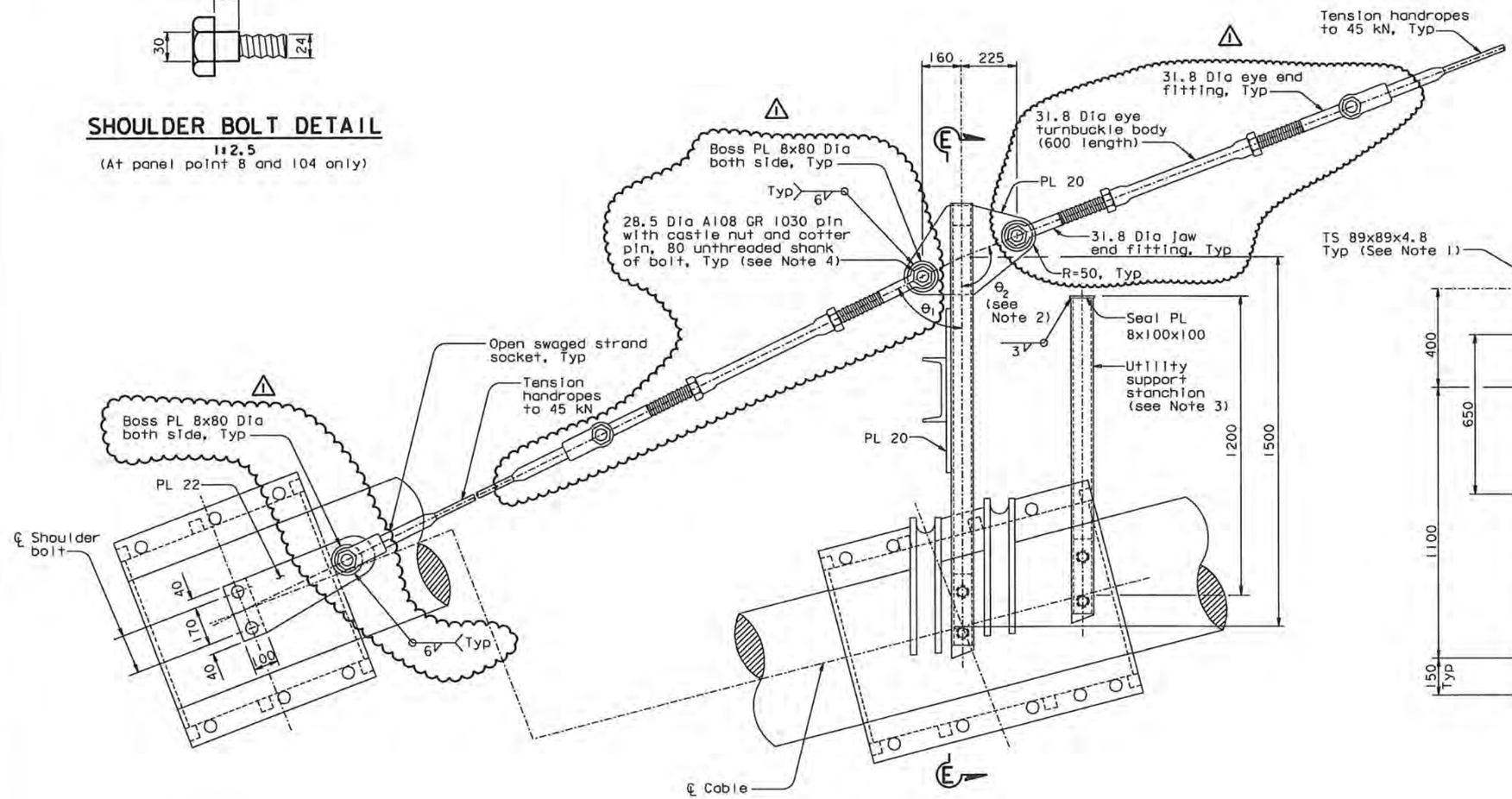

HANDROPE ANCHORAGE AT PANEL POINT 8

(Details at panel point 104 are similar)

ANCHOR STANCHION AT PANEL POINT 10

(Details at panel points 40, 44 & 102 are similar)

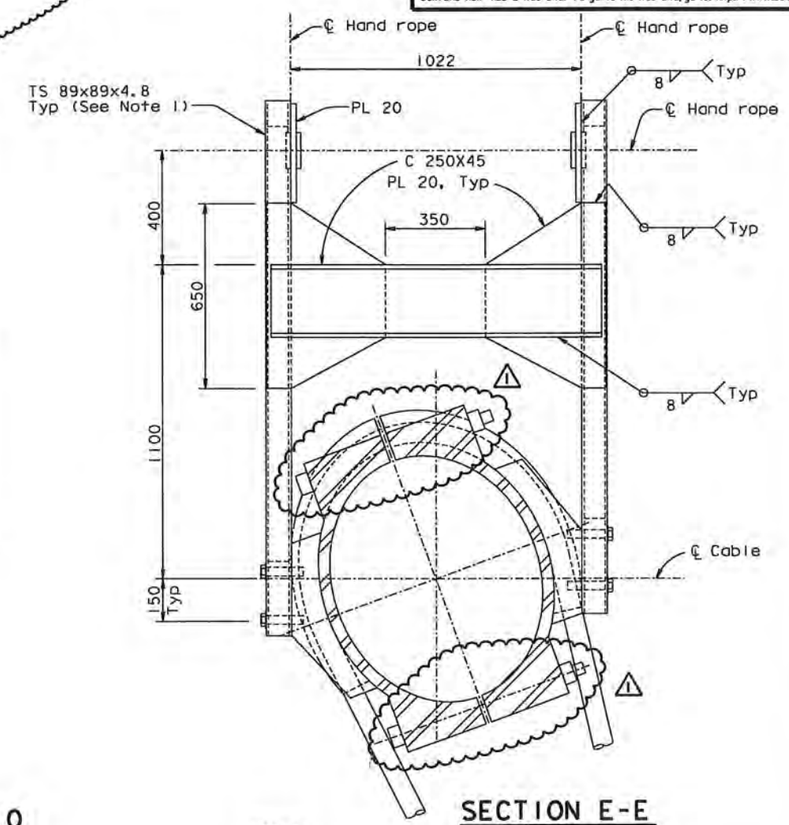

SECTION E-E

1:10

DETAIL A

1:10

NOTES:

1. For details not shown, see "Cable Band Details" and "Cable Handrope Details No. 1" sheets.
2. For handrope bracket angles, see "Cable Handrope Details No. 3" sheet.
3. For details not shown, see "Cable Handrope Details No. 1" sheet. For utility support stanchion locations, see "Road Plans" sheets.
4. The Contractor may revise the pin details as approved by the Engineer. The pin shall develop the breaking load of the handrope.

MARK	DATE	DESCRIPTIONS	BY	CH'D	CCO#
1	04/16/07	CABLE SYSTEM	GB	MN	37

REVISIONS

CONTRACT CHANGE ORDER NO. 37 50
SHEET 20 OF 24

ALL DIMENSIONS ARE IN MILLIMETERS UNLESS OTHERWISE SHOWN

SAN FRANCISCO OAKLAND BAY BRIDGE
EAST SPAN SEISMIC SAFETY PROJECT
SELF-ANCHORED SUSPENSION BRIDGE
(SUPERSTRUCTURE & TOWER)

CABLE HANDROPE DETAILS NO. 2

R. Valizadeh/V. Toan/Y.L./W.L./F.C.
DESIGN OVERSIGHT
Reza Valizadeh / Vong Toan / Y. Lin
SIGN OFF DATE 04/16/07

	BY	CHECKED
DESIGN	M. Nader	T. McMeans
DETAILS	G. Baker	T. McMeans
QUANTITIES	G. Baker	C. Mibelli

PREPARED FOR THE STATE OF CALIFORNIA DEPARTMENT OF TRANSPORTATION

R. Manzanarez
PROJECT ENGINEER

BRIDGE NO. 34-0006L/R
KILOMETER POST 13.2/13.9

Rev. Date: 5-18-98

ORIGINAL SCALE IN MILLIMETERS FOR REDUCED PLANS 0 10 20 30 40 50 60 70 80 90 100

CU 04
EA 0120F1

DISREGARD PRINTS BEARING EARLIER REVISION DATES

REVISION DATES (PRELIMINARY STAGE ONLY) 05/15/99 08/02/99 05/31/01 04/08/02 07/01/02 12/19/02

SHEET 396R1 OF

FILE => I:\bb\04-012001\sas\contract plans and cco\cco\in progress\cco#37\dgn\cagshr08.dgn

USERNAME => ptom DATE PLOTTED => 24 APR 2007 TIME PLOTTED => 11:43:20

100 % PS&E

Panel Point	Handrope Bracket Angles		
	θ_1	θ_2	θ_3
10	60°	116°	NA
40	54°	116°	35°
44	60°	112°	30°
102	78°	96°	NA

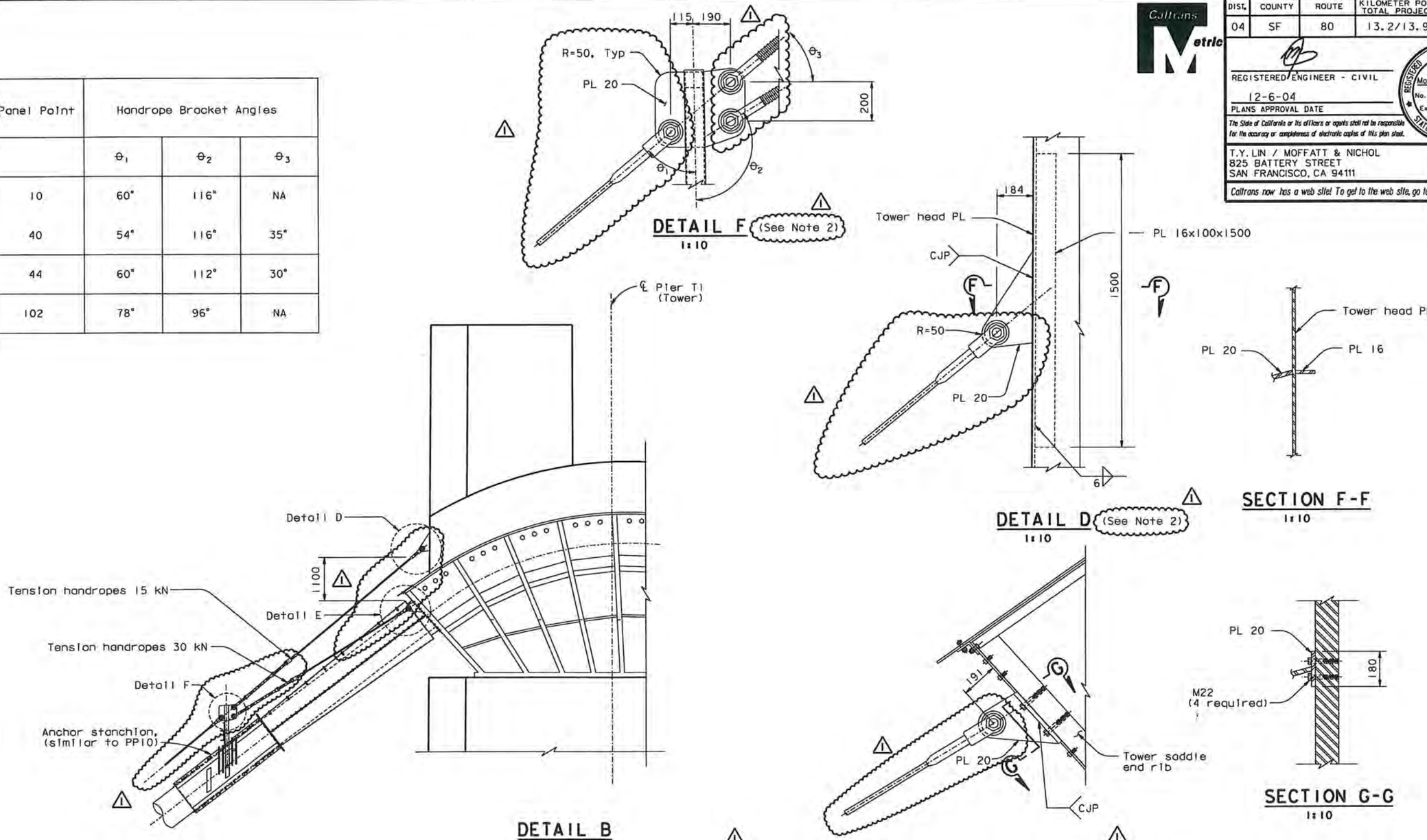

DIST.	COUNTY	ROUTE	KILOMETER POST TOTAL PROJECT	SHEET NO.	TOTAL SHEETS
04	SF	80	13.2/13.9	814R1	1204

REGISTERED ENGINEER - CIVIL

12-6-04

PLANS APPROVAL DATE

REGISTERED PROFESSIONAL ENGINEER Marwan N. Nader No. C 054426 Exp. 12/31/07 CIVIL STATE OF CALIFORNIA

The State of California or its officers or agents shall not be responsible for the accuracy or completeness of electronic copies of this plan sheet.

T.Y. LIN / MOFFATT & NICHOL
825 BATTERY STREET
SAN FRANCISCO, CA 94111

Caltrans now has a web site! To get to the web site, go to: http://www.dot.ca.gov

NOTES:

1. For anchor stanchion, see "Cable Handrope Details No. 2" sheet.
2. For details not shown see "Cable Handrope Details No. 2" sheet.

MARK	DATE	DESCRIPTIONS	BY	CH'D	CCO#
1	04/16/07	CABLE SYSTEM	GB	MN	37

REVISIONS

CONTRACT CHANGE ORDER NO. 37 SO
SHEET 21 OF 24

ALL DIMENSIONS ARE IN MILLIMETERS UNLESS OTHERWISE SHOWN

SAN FRANCISCO OAKLAND BAY BRIDGE
EAST SPAN SEISMIC SAFETY PROJECT
SELF-ANCHORED SUSPENSION BRIDGE
(SUPERSTRUCTURE & TOWER)

CABLE HANDROPE DETAILS NO. 3

R. Valizadeh/V. Toan/Y.L./W.L./F.C.
DESIGN OVERSIGHT
Roger Valizadeh / Vong Toan / Y. Lin
SIGN OFF DATE 04/16/07

	BY	CHECKED
DESIGN	M. Nader	T. McMeans
DETAILS	G. Baker	T. McMeans
QUANTITIES	G. Baker	C. Mibelli

PREPARED FOR THE STATE OF CALIFORNIA DEPARTMENT OF TRANSPORTATION

R. Manzanarez
PROJECT ENGINEER

BRIDGE NO. 34-0006L/R
KILOMETER POST 13.2/13.9

CU 04
EA 0120F1

DISREGARD PRINTS BEARING EARLIER REVISION DATES

REVISION DATES (PRELIMINARY STAGE ONLY) 08/02/99 05/31/01 04/08/02 07/01/02 12/18/02 09/06/04

SHEET 397R1 OF

Rev. Date: 5-18-98

ORIGINAL SCALE IN MILLIMETERS FOR REDUCED PLANS 0 10 20 30 40 50 60 70 80 90 100

FILE => I:\bb\04-0120I\sas\contract plans and cco\cco\in progress\cco#37\dgn\cagshr09.dgn

USERNAME => ptom DATE PLOTTED => 28 AUG 2007 TIME PLOTTED => 14:48:16

100 % PS&E

DIST.	COUNTY	ROUTE	KILOMETER POST TOTAL PROJECT	SHEET NO.	TOTAL SHEETS
04	SF	80	13.2/13.9	876R3	1204

George Baker
REGISTERED ENGINEER - CIVIL
12-6-04
PLANS APPROVAL DATE

REGISTERED PROFESSIONAL ENGINEER George S. Baker No. C57112 Exp. 12/31/05 CIVIL STATE OF CALIFORNIA

The State of California or its officers or agents shall not be responsible for the accuracy or completeness of electronic copies of this plan sheet.

REGISTERED PROFESSIONAL ENGINEER Daniel J. Turner No. C 65033 Exp. 06/30/11 CIVIL STATE OF CALIFORNIA

FOR REVISIONS ONLY

T.Y. LIN / MOFFATT & NICHOL
825 BATTERY STREET
SAN FRANCISCO, CA 94111

Caltrans now has a web site! To get to the web site, go to: http://www.dot.ca.gov

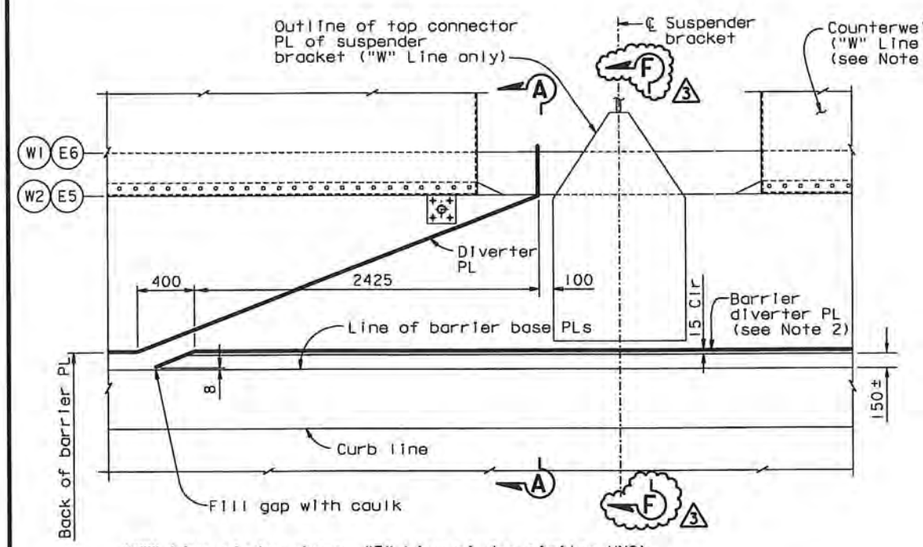

("W" Line girder shown. "E" Line girder similar UNO)

TYPICAL DRAINAGE PLAN TYPE 1 (See Notes 3 & 5)

1:20

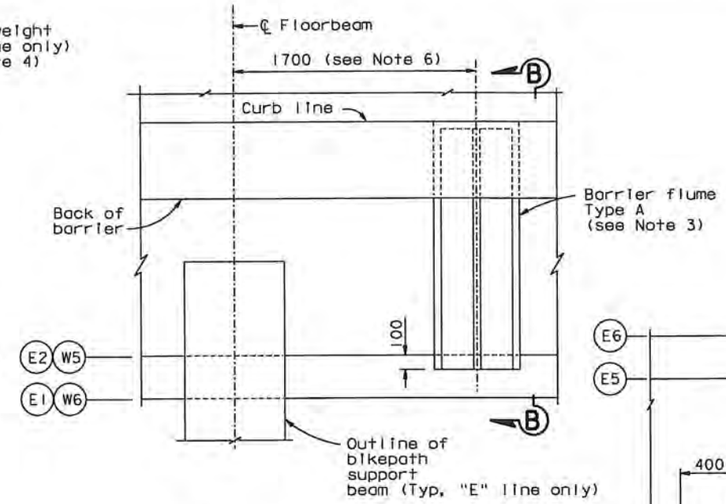

("E" Line girder shown. "W" Line girder similar UNO)

TYPICAL DRAINAGE PLAN TYPE 2

1:20 (See Note 3)

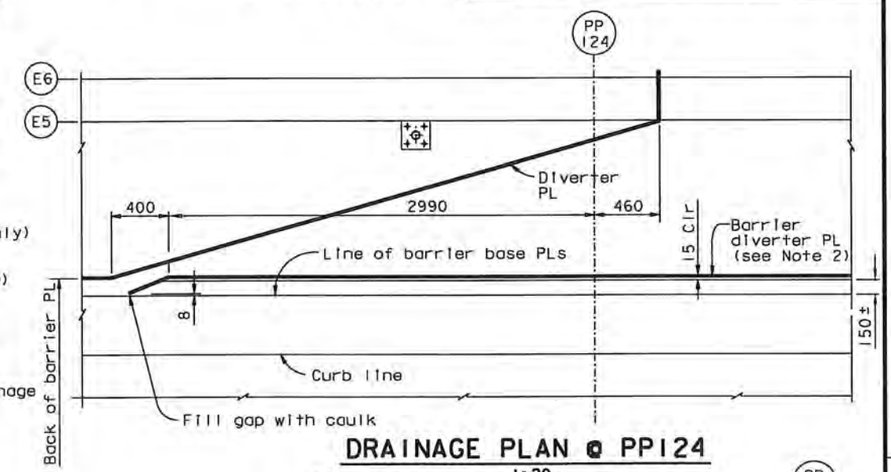

DRAINAGE PLAN @ PP124

1:20

NOTES:

1. For sections A-A, A'-A', B-B, C-C, see "Deck Drainage Details No. 2" sheet.
2. Barrier diverter plate shall be continuous along barriers near working lines W2 and E5, unless otherwise shown.
3. For barrier flume details and locations of drainage types 1, 2 and 3, see "Deck Drainage Details No. 3" sheet.
4. For Counterweight details, see "Typical Girder Details" sheets.
5. Diverter plates may be shifted subject to review and approval by the Engineer.
6. Barrier flumes may be shifted to avoid interferences with deck level utilities and fixtures, subject to review and approval of the Engineer.

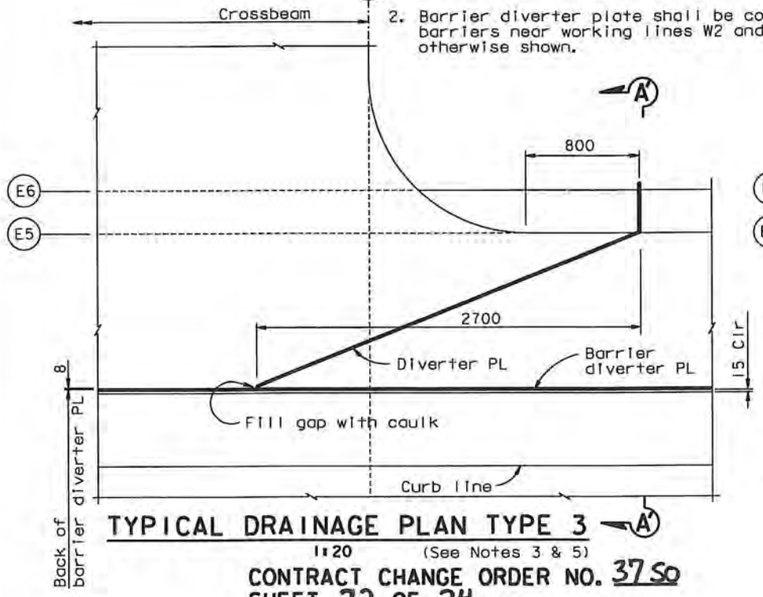

TYPICAL DRAINAGE PLAN TYPE 3

1:20 (See Notes 3 & 5)

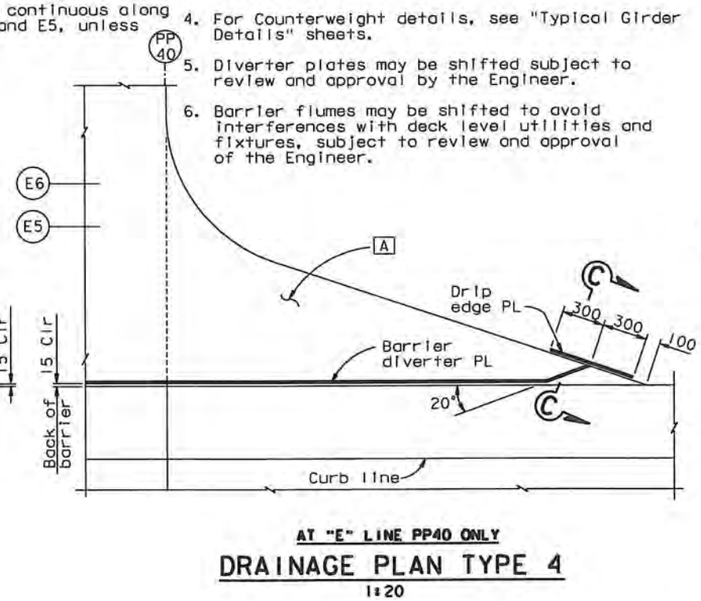

AT "E" LINE PP40 ONLY

DRAINAGE PLAN TYPE 4

1:20

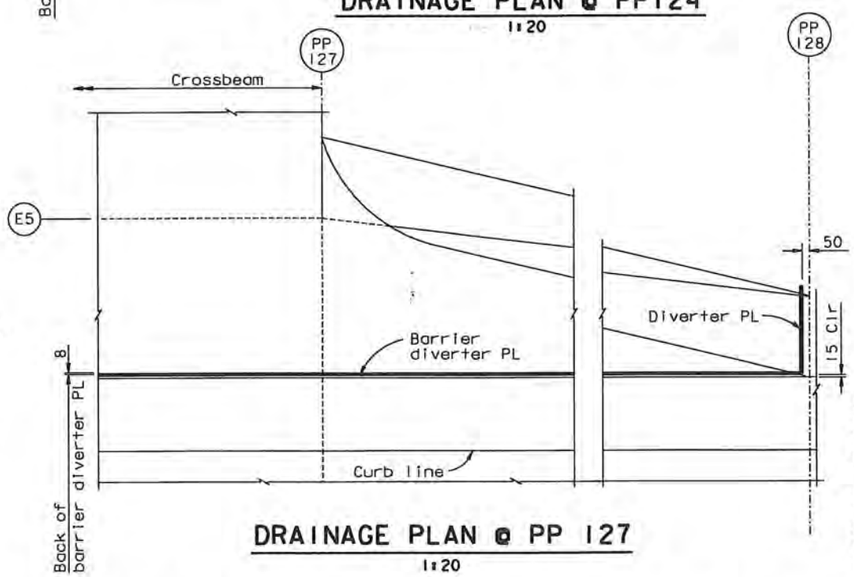

DRAINAGE PLAN @ PP 127

1:20

CONTRACT CHANGE ORDER NO. 37 SO
SHEET 22 OF 24

REQUESTS FOR INFORMATION NOT ADDRESSED IN THIS CCO REMAIN IN FORCE

MARK	DATE	DESCRIPTIONS	BY	CH'D	CCO#
3	10/30/09	MOD. SUSP. BRACKETS & CABLE SYSTEM	CC	DT	37
2	04/18/08	BARRIER MODIFICATIONS	AS	DT	44
1	08/24/07	BARRIER MODIFICATIONS	GB	DT	44

REVISIONS

R. Vallizadeh/V. Toan/Y.L./W.L./F.C.
DESIGN OVERSIGHT
Roya Vallizadeh / Vang Toan / Y. Liu
SIGN OFF DATE 10/30/09

Rev. Date: 5-18-98

	BY	CHECKED
DESIGN	G. Baker	T. Ho
DETAILS	D. Turner	T. Ho
QUANTITIES	G. Baker	D. Harrison

PREPARED FOR THE STATE OF CALIFORNIA DEPARTMENT OF TRANSPORTATION

ORIGINAL SCALE IN MILLIMETERS FOR REDUCED PLANS 0 10 20 30 40 50 60 70 80 90 100

ALL DIMENSIONS ARE IN MILLIMETERS UNLESS OTHERWISE SHOWN

R. Manzanarez
PROJECT ENGINEER

CU 04
EA 0120F1

BRIDGE NO. 34-0006L/R
KILOMETER POST 13.2/13.9

DISREGARD PRINTS BEARING EARLIER REVISION DATES

REVISION DATES (PRELIMINARY STAGE ONLY) 05/07/99 06/28/99 05/24/01 04/30/02 07/01/02 12/13/02

SAN FRANCISCO OAKLAND BAY BRIDGE
EAST SPAN SEISMIC SAFETY PROJECT
SELF-ANCHORED SUSPENSION BRIDGE
(SUPERSTRUCTURE & TOWER)

DECK DRAINAGE DETAILS NO. 1

SHEET 459R3 OF

100 % PS&E

USERNAME => crivera DATE PLOTTED => 29 OCT 2009 TIME PLOTTED => 16:42:50

FILE => I:\bb\04-0120F1\sas\contract plans and cco\cco\cco#37\2-revision 10-30-09\dgn\akdkd01.dgn

DIST.	COUNTY	ROUTE	KILOMETER POST TOTAL PROJECT	SHEET NO.	TOTAL SHEETS
04	SF	80	13.2/13.9	876S1	1204

REGISTERED ENGINEER - CIVIL

10-30-09
PLANS APPROVAL DATE

REGISTERED PROFESSIONAL ENGINEER James P. Duxbury No. C 64677 Exp. 06/30/11 CIVIL STATE OF CALIFORNIA

The State of California or its officers or agents shall not be responsible for the accuracy or completeness of electronic copies of this plan sheet.

T.Y. LIN / MOFFATT & NICHOL
825 BATTERY STREET
SAN FRANCISCO, CA 94111

Caltrans now has a web site! To get to the web site, go to: http://www.dot.ca.gov

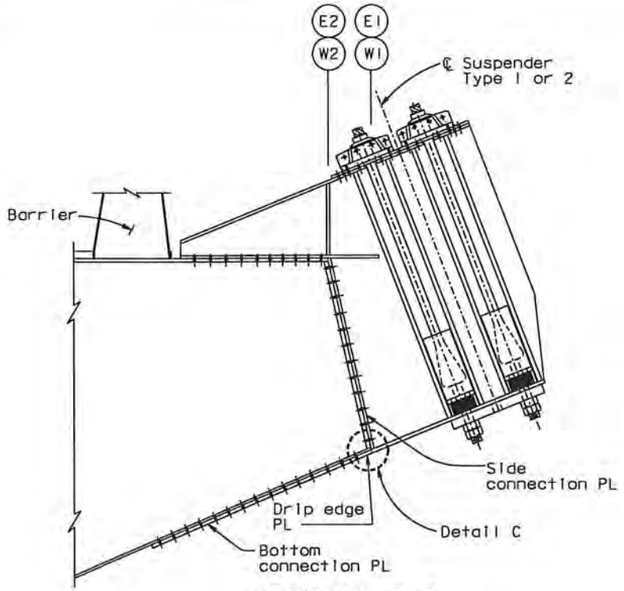

SECTION F-F
1:20

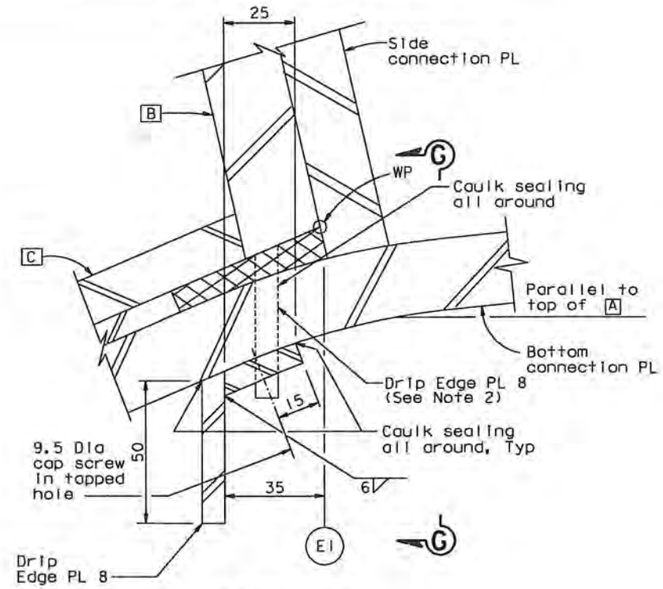

DETAIL C
1:1

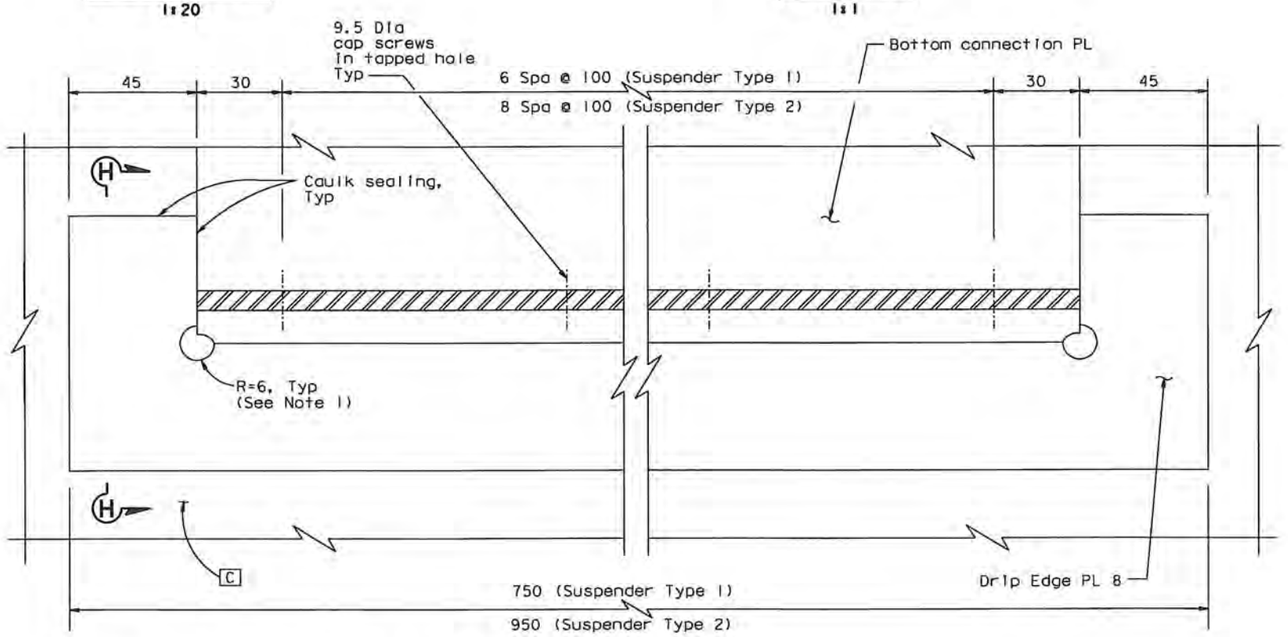

VIEW G-G
1:1

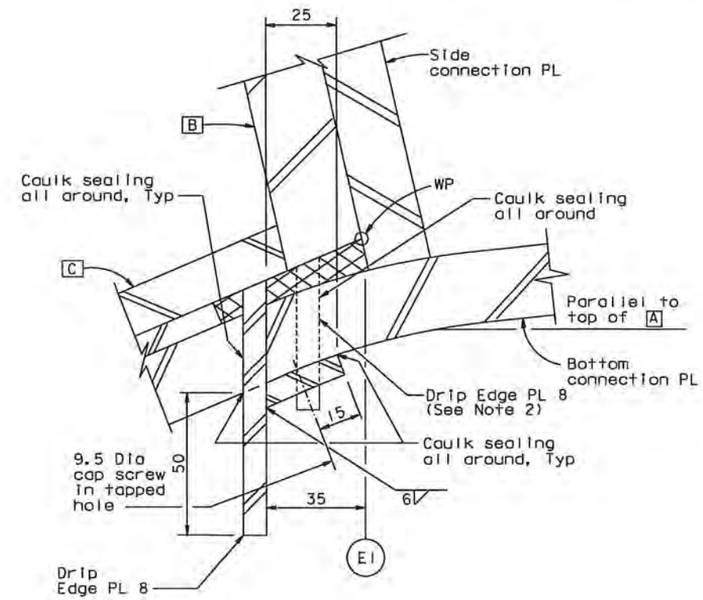

SECTION H-H
1:1

NOTES:

1. Round cope is provided for Contractor's fabrication and is optional. The cope shall be filled with caulk after drip edge PL installation.
2. Drip edge PL 8 welded to Girder Face C terminates at suspender bracket. Caulk sealing shall be applied all around the termination.

CONTRACT CHANGE ORDER NO. 3750
SHEET 23 OF 24

REQUESTS FOR INFORMATION NOT ADDRESSED IN THIS CCO REMAIN IN FORCE

ALL DIMENSIONS ARE IN MILLIMETERS UNLESS OTHERWISE SHOWN

R. Valizadeh/V. Toan/Y.L./W.L./F.C.
DESIGN OVERSIGHT
SIGN OFF DATE 10/30/09

MARK	DATE	DESCRIPTIONS	BY	CH'D	CCO#
0	10/30/09	MOD. SUSP. BRACKETS & CABLE SYSTEM	CC	JD	37

REVISIONS

DESIGN	BY C. Chol	CHECKED J. Duxbury	
DETAILS	BY C. Chol	CHECKED J. Duxbury	
QUANTITIES	BY C. Chol	CHECKED J. Duxbury	

PREPARED FOR THE STATE OF CALIFORNIA DEPARTMENT OF TRANSPORTATION

R. Manzanarez
PROJECT ENGINEER

BRIDGE NO. 34-0006L/R
KILOMETER POST 13.2/13.9

SAN FRANCISCO OAKLAND BAY BRIDGE
EAST SPAN SEISMIC SAFETY PROJECT
SELF-ANCHORED SUSPENSION BRIDGE
(SUPERSTRUCTURE & TOWER)

DECK DRAINAGE DETAILS NO. 1A

Rev. Date: 5-18-98

ORIGINAL SCALE IN MILLIMETERS FOR REDUCED PLANS 0 10 20 30 40 50 60 70 80 90 100

CU 04
EA 0120F1

DISREGARD PRINTS BEARING EARLIER REVISION DATES 10/30/09

REVISION DATES (PRELIMINARY STAGE ONLY)

SHEET 459S1 OF

FILE => I:\bb\04-012001\sas\contract plans and cco\cco\cco#37\2-revision 10-30-09\dgn\akdkd01a.dgn

100 % PS&E

USERNAME => crivera DATE PLOTTED => 29 OCT 2009 TIME PLOTTED => 16:44:05

DIST.	COUNTY	ROUTE	KILOMETER POST TOTAL PROJECT	SHEET NO.	TOTAL SHEETS
04	SF	80	13.2/13.9	876S2	1204

REGISTERED ENGINEER - CIVIL

04-02-10
PLANS APPROVAL DATE

REGISTERED PROFESSIONAL ENGINEER James P. Duxbury No. C 64677 Exp. 06/30/11 CIVIL STATE OF CALIFORNIA

The State of California or its officers or agents shall not be responsible for the accuracy or completeness of electronic copies of this plan sheet.

T.Y. LIN / MOFFATT & NICHOL
825 BATTERY STREET
SAN FRANCISCO, CA 94111

Caltrans now has a web site! To get to the web site, go to: http://www.dot.ca.gov

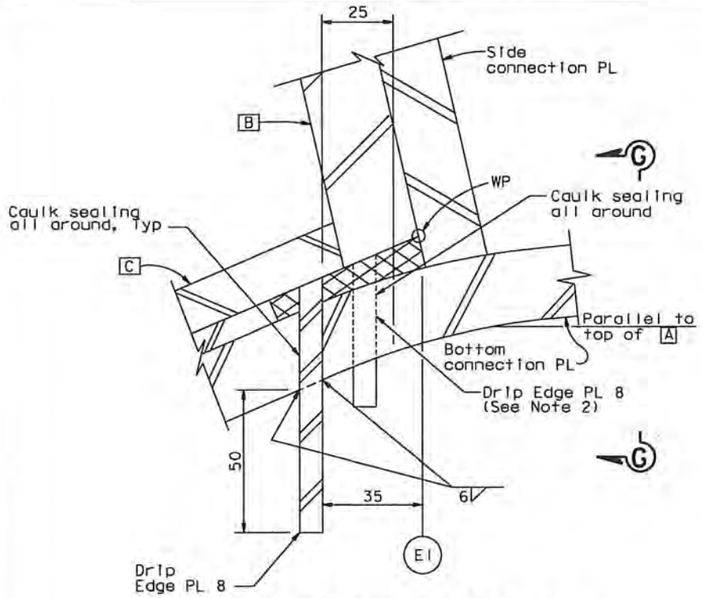

ALTERNATIVE DETAIL C (WELDED OPTION)

1:1

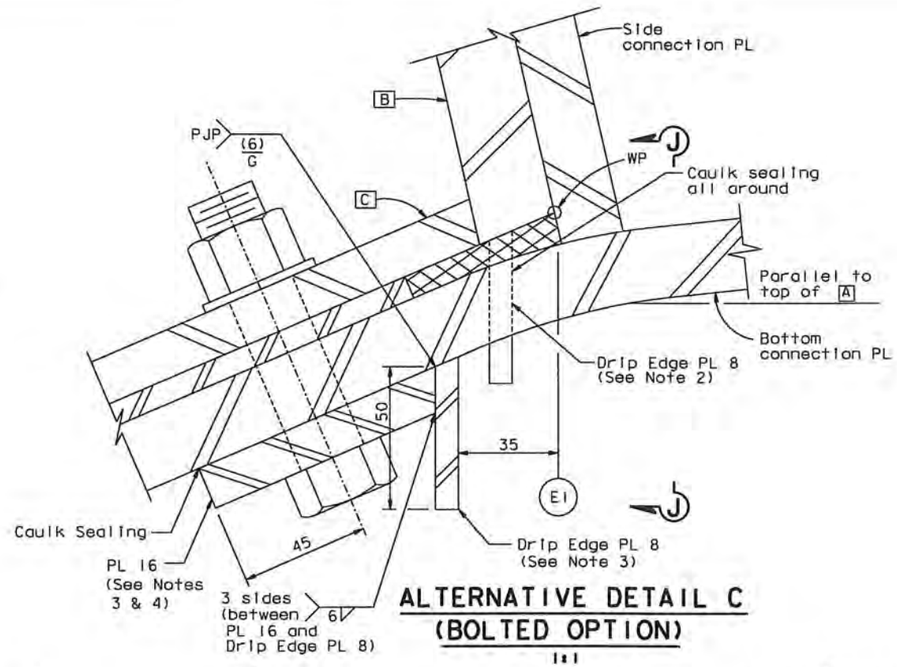

ALTERNATIVE DETAIL C (BOLTED OPTION)

1:1

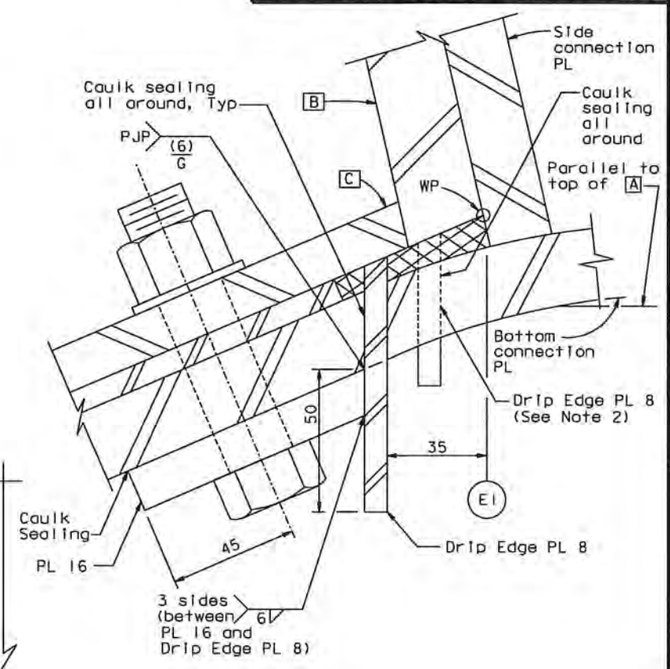

SECTION K-K

1:1

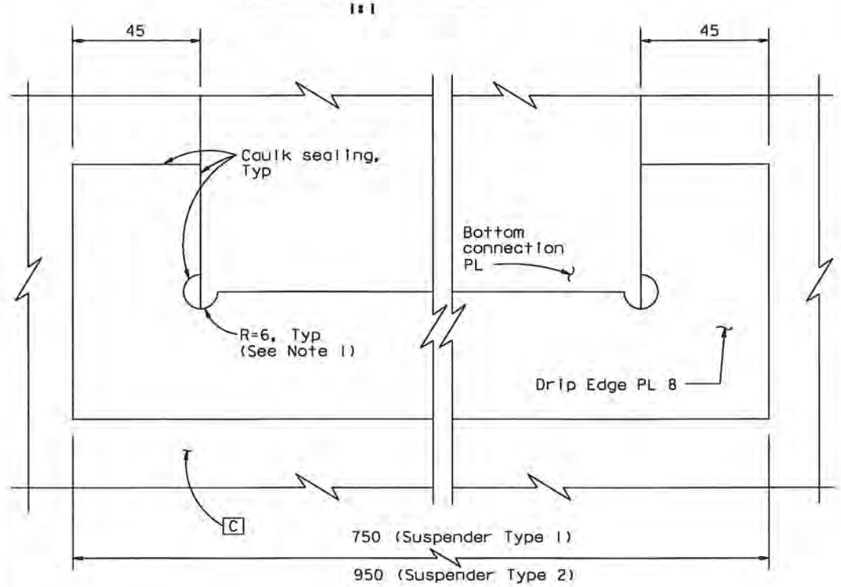

VIEW G-G

1:1

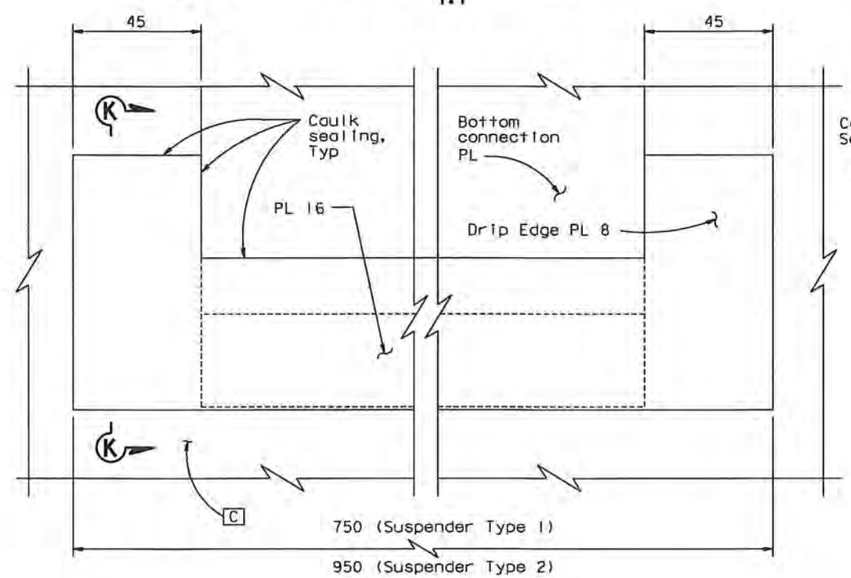

VIEW J-J

1:1

NOTES:

1. At the Contractor's option, "Alternative Detail C" may be used in lieu of "Detail C" on "Deck Drainage Details No. 1A" sheet.
2. Drip edge PL 8 welded to Girder Face C terminates at suspender bracket. Caulk sealing shall be applied all around the termination.
3. PL 16 and drip edge PL 8 shall be pre-assembled prior to field installation.
4. At the Contractor's option, short-slotted holes or standard oversized holes are acceptable in Drip Edge PL 8, provided hardened washers are used.

CONTRACT CHANGE ORDER NO. 37 SO
SHEET 24 OF 24

REQUESTS FOR INFORMATION NOT ADDRESSED IN THIS CCO REMAIN IN FORCE

ALL DIMENSIONS ARE IN MILLIMETERS UNLESS OTHERWISE SHOWN

R. Valizadeh/V. Toon/Y.L./W.L./F.C.
DESIGN OVERSIGHT
SIGN OFF DATE 04/02/10

MARK	DATE	DESCRIPTIONS	BY	CH'D	CCO#
0	04/02/10	MOD. SUSP. BRACKETS & CABLE SYSYTEM	CC	JD	37

REVISIONS

DESIGN	BY C. Chol	CHECKED J. Duxbury	
DETAILS	BY C. Chol	CHECKED J. Duxbury	
QUANTITIES	BY C. Chol	CHECKED J. Duxbury	

PREPARED FOR THE STATE OF CALIFORNIA DEPARTMENT OF TRANSPORTATION

R. Manzanarez
PROJECT ENGINEER

BRIDGE NO. 34-0006L/R
KILOMETER POST 13.2/13.9

SAN FRANCISCO OAKLAND BAY BRIDGE
EAST SPAN SEISMIC SAFETY PROJECT
SELF-ANCHORED SUSPENSION BRIDGE
(SUPERSTRUCTURE & TOWER)

DECK DRAINAGE DETAILS NO. 1B

Rev. Date: 5-18-98

ORIGINAL SCALE IN MILLIMETERS FOR REDUCED PLANS 0 10 20 30 40 50 60 70 80 90 100

CU 04
EA 0120F1

DISREGARD PRINTS BEARING EARLIER REVISION DATES 04/02/10

REVISION DATES (PRELIMINARY STAGE ONLY)

SHEET 459S2 OF

FILE => I:\bb\04-01200\sas\contract plans and cco\cco\cco37\4-update 04-02-10\dgn\akdkd01b.dgn

USERNAME => arivera DATE PLOTTED => 31 MAR 2010 TIME PLOTTED => 14:16:35

100 % PS&E

CONTRACT CHANGE ORDER

Change Requested by: Engineer

CCO: 37 **Suppl. No. 1** **Contract No. 04 – 0120F4** **Road** SF-80-13.2/13.9 **FED. AID LOC.:**

To: **AMERICAN BRIDGE/FLUOR ENTERPRISES INC A JOINT VENTURE**

You are directed to make the following changes from the plans and specifications or do the following described work not included in the plans and specifications for this contract. ***NOTE: This change order is not effective until approved by the Engineer.***

Description of work to be done, estimate of quantities and prices to be paid. (Segregate between additional work at contract price, agreed price and force account.) Unless otherwise stated, rates for rental of equipment cover only such time as equipment is actually used and no allowance will be made for idle time. This last percentage shown is the net accumulated increase or decrease from the original quantity in the Engineer's Estimate.

Adjustment of Compensation at Lump Sum:

- As directed by the Engineer, perform field work to install drip plates on the suspender brackets.
- Provide jam nuts at both ends of the PWS anchor rods and apply thread locking compound to PWS socket set screws.
- Provide a jam nut for each of the B14 cable band's M16 bolts.
- Modify split collar.
- Provide Contractor's consultant Candraft-Tensor, LLC (CTLLC), full compensation for additional shop drawing structural detailing related to suspender and cable bracket modifications from September 1, 2010, thru February 25, 2011. This change order resolves all detailing costs included in ABF-CAL-LTR-001614 dated August 4, 2011.

Revise the third paragraph following the Bolt Sampling Size table of Special Provisions Section 10-1.59 "STEEL STRUCTURES," subsection "FABRICATION," subsection "Bolted Connections" as shown on page 2.

Revise the first paragraph of Special Provisions Section 10-1.60 "CABLE SYSTEM," subsection "MATERIALS AND FABRICATION," subsection "Cable band bolts" as shown on page 2.

The following revised plan sheets detail the changes addressed in this change order: 732R1, 733R2, 735R1, 736R2, 737R2, 744R3, 751R2, 761R1, and 912R3 (of 1204) as shown on sheets 3 through 11 of this change order.

This change order resolves the costs associated with Contractor Request for Information (RFI) numbers 791, 1262, 1473, 1727R0, 1727R1, and 2268 with respect to changes listed above.

For this work, the Contractor will receive a lump sum price of $84,376.00. This sum constitutes full and complete compensation for furnishing all labor, material, tools and incidentals including all markups by reason of this change.

Adjustment of Compensation at Lump Sum.....$84,376.00

Estimated Cost: Increase ☒ Decrease ☐ $84,376.00

By reason of this order the time of completion will be adjusted as follows: 0 Days

Submitted by

Signature	**Resident Engineer**	Kannu Balan, Senior T.E.	**Date** 9-28-11

Approval Recommended by

Signature	**Supervising Bridge Engineer**	Brian Boal, Actg. Sup. B.E.	**Date** 9/28/2011

Engineer Approval by

Signature	**Supervising Transportation Engineer**	William Casey, Sup T.E.	**Date** 10/6/11

We the undersigned contractor, have given careful consideration to the change proposed and agree, if this proposal is approved, that we will provide all equipment, furnish the materials, except as otherwise be noted above, and perform all services necessary for the work above specified, and will accept as full payment therefor the prices shown above.

NOTE: If you, the contractor, do not sign acceptance of this order, your attention is directed to the requirements of the specifications as to proceeding with the ordered work and filing a written protest within the time therein specified.

Contractor Acceptance by

Signature	(Print name and title) BRIAN A. PETERSEN - PROJECT DIRECTOR	**Date** 05OCT11

STATE OF CALIFORNIA - DEPARTMENT OF TRANSPORTATION

CONTRACT CHANGE ORDER MEMORANDUM

TO: Tony Anziano, Program Manager /	FILE: **E.A.** 04 - 0120F4
FROM: Kannu Balan, Senior TE	**CO-RTE-PM** SF-80-13.2/13.9
	FED. NO.
CCO#: **37** SUPPLEMENT#: **1** Category Code: **CHSA**	CONTINGENCY BALANCE (incl. this change) **$146,559,512.11**
COST: **$84,376.00** INCREASE ☑ DECREASE ☐	HEADQUARTERS APPROVAL REQUIRED? ☑ YES ☐ NO
SUPPLEMENTAL FUNDS PROVIDED: **$0.00**	IS THIS REQUEST IN ACCORDANCE WITH ENVIRONMENTAL DOCUMENTS? ☑ YES ☐ NO
CCO DESCRIPTION: Misc. Cable System Details	**PROJECT DESCRIPTION:** CONSTRUCT SELF-ANCHORED SUSPENSION BRIDGE

Original Contract Time:	Time Adj. This Change:	Previously Approved CCO Time Adjustments:	Percentage Time Adjusted: (including this change)	Total # of Unreconciled Deferred Time CCO(s): (including this change)
2490 Day(s)	**0** Day(s)	**501** Day(s)	**20** %	**3**

THIS CHANGE ORDER PROVIDES FOR:

As directed by the Engineer, performing field work to install drip plates on the suspender brackets. Providing jam nuts at both ends of the PWS anchor rods and applying thread locking compound to PWS socket set screws. Providing a jam nut for each of the B14 cable band's M16 bolts. Compensating for additional shop drawing structural detailing related to suspender and cable bracket modifications.

Revising Special Provisions Section 10-1.59 "STEEL STRUCTURES," subsection "FABRICATION," subsection "Bolted Connections."

Revising the first paragraph of Special Provisions Section 10-1.60 "CABLE SYSTEM," subsection "MATERIALS AND FABRICATION," subsection "Cable band bolts."

CCO 37S1 includes changes to the suspender brackets and cable system that were not resolved in CCO 37S0. This change order will install drip plates that were fabricated in CCO 37S0 for the suspender brackets. Jam nuts are added since the tensioning has changed due to limited access and to secure the coupling nuts during a seismic event. The Special Provisions were revised to reference the correct galvanizing ASTM. The hole pattern of the split collar is aligned to that of the fabricated suspender brackets. Department authorized changes required the Contractor's detailer to modify previously approved and/or prepare new shop drawings for the suspender and cable brackets.

This change order resolves the costs associated with Contractor Request for Information (RFI) numbers 791, 1262, 1473, 1727R0, 1727R1 and 2268 with respect to changes listed above.

The cost of this supplemental change is $84,376.00, which can be financed from the contingency fund. This will result in a cumulative amount of $594,788.00 for CCO 37S0 and 37S1. A detailed cost estimate is on file.

No time adjustment is warranted as this change order does not affect the controlling operation.

This change order has concurrence from Peter Siegenthaler (Principal TE), Brian Boal (Supervising BE), Ken Terpstra (Proj. Manager), Rich Foley (HQ Oversight), Wenyi Long (Design Oversight), Jing Chen (District Design), and Lina Ellis (Maintenance) October 6, 2011.

ADA Notice: For individuals with sensory disabilities, this document is available in alternate formats. For information call: (916) 654-6410 or TDD (916) 654-3880 or write Records and Forms Management, 1120 N Street, MS-89, Sacramento, CA 95814.

CONCURRED BY:			
Construction Engineer:	PCE, Pete Siegenthaler, Prin TE	Date	1/4/11
Bridge Engineer:	Brian Boal, Sup BE	Date	1/3/11
Project Engineer:	CT Oversight, Wenyi Long, P.E.	Date	2/1/11
Project Manager:	Proj Manager, Ken Terpstra	Date	11/30/10
FHWA Rep.:		Date	
Environmental:		Date	
Other (specify):	HQ, Rich Foley	Date	1/4/11
Other (specify):	District Design, Jing Chen	Date	3/10/11
District Prior Approval By:	HQ, Larry Salhaney	Date	1/5/11
HQ (Issue, Approve) By:		Date	
Resident Engineer's Signature:		Date	9-28-11

ESTIMATE OF COST

	THIS REQUEST	TOTAL TO DATE
ITEMS	$0.00	$3,170.00
FORCE ACCOUNT	$0.00	$0.00
AGREED PRICE	$0.00	$0.00
ADJUSTMENT	$84,376.00	$591,618.00
TOTAL	$84,376.00	$594,788.00

FEDERAL PARTICIPATION

☐ PARTICIPATING ☐ PARTICIPATING IN PART ☑ NONE
☐ NON-PARTICIPATING (MAINTENANCE) ☐ NON-PARTICIPATING

FEDERAL SEGREGATION (if more than one Funding Source or P.I.P. type)
☐ CCO FUNDED PER CONTRACT ☐ CCO FUNDED AS FOLLOWS

FEDERAL FUNDING SOURCE	PERCENT

ADA Notice: For individuals with sensory disabilities, this document is available in alternate formats. For information call: (916) 654-6410 or TDD (916) 654-3880 or write Records and Forms Management, 1120 N Street, MS-89, Sacramento, CA 95814.

Caltrans now has a web site! To get to the web site, go to: http://www.dot.ca.gov

Caltrans Metric

DIST.	COUNTY	ROUTE	KILOMETER POST TOTAL PROJECT	SHEET NO.	TOTAL SHEETS
04	SF	80	13.2/13.9	732R1	1204

George Baker
REGISTERED ENGINEER - CIVIL
12-6-04
PLANS APPROVAL DATE
The State of California or its officers or agents shall not be responsible for the accuracy or completeness of electronic copies of this plan sheet.

REGISTERED PROFESSIONAL ENGINEER George S. Baker No. C 57112 Exp. 12/31/05 CIVIL STATE OF CALIFORNIA

T.Y. LIN / MOFFATT & NICHOL
825 BATTERY STREET
SAN FRANCISCO, CA 94111

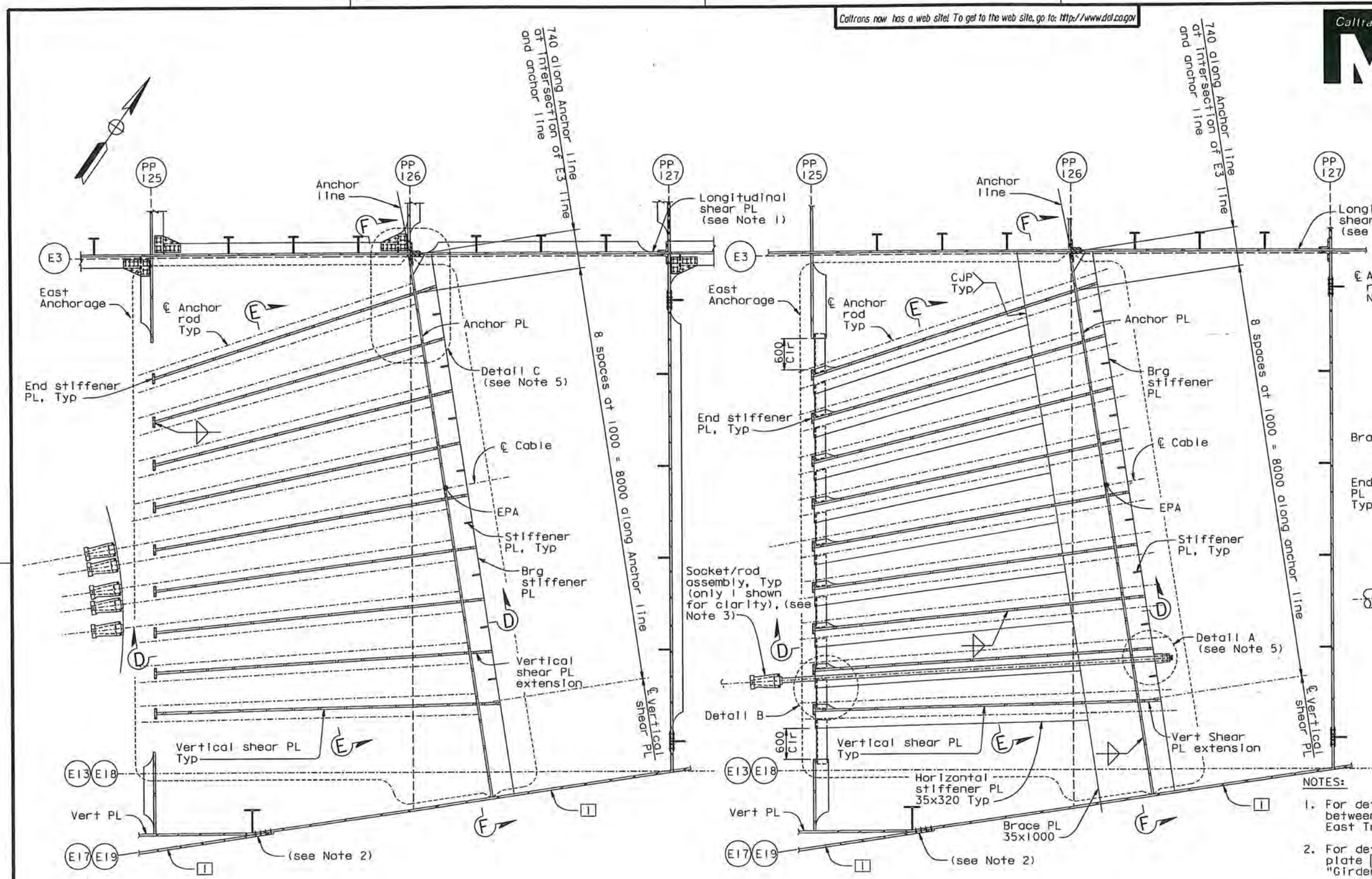

AT LEVEL OF TYPICAL BEARING STIFFENER

AT LEVEL OF BRACE PLATE

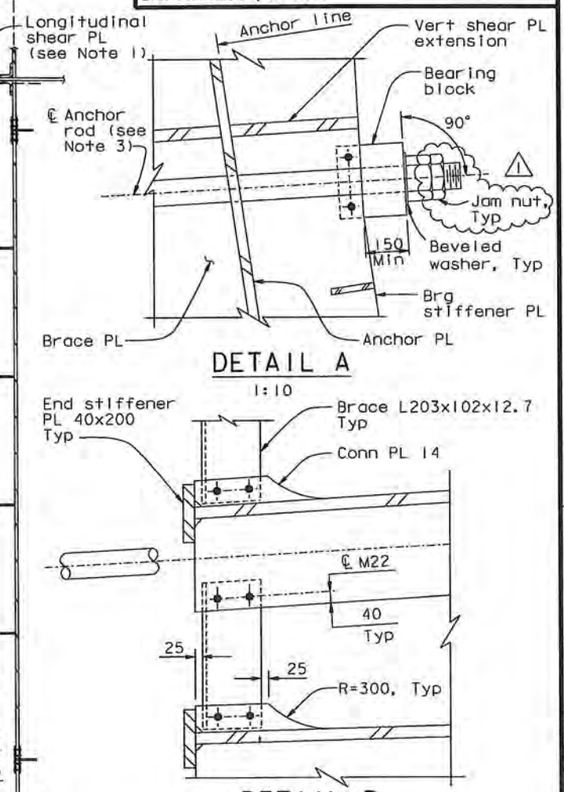

NOTES:

1. For details of longitudinal shear plate between PP125 and PP127, see "Girder At East Transition No. 16" sheet.
2. For details of splice connection at girder plate [1] and vertical plate convergence, see "Girder At East Transition Details" sheets.
3. For strand socket and anchor rod details, see "East Cable Anchorage Details" sheet.
4. For Detail C and Sections D-D, E-E and F-F, see "East Cable Anchorage "E" Line Layout No. 3" sheet.
5. Machining of bearing stiffener not shown in plan view.

PLAN SECTION C-C
1:40

ALL DIMENSIONS ARE IN MILLIMETERS UNLESS OTHERWISE SHOWN

REGISTERED PROFESSIONAL ENGINEER Marwan N. Nader No. C 054426 Exp. 12/31/11 CIVIL STATE OF CALIFORNIA

FOR REVISIONS ONLY

CONTRACT CHANGE ORDER NO. 37S01
SHEET 3 OF 11

REQUESTS FOR INFORMATION NOT ADDRESSED IN THIS CCO REMAIN IN FORCE

MARK	DATE	DESCRIPTIONS	BY	CH'D	CCO#
1	01/28/11	MISCELLANEOUS CABLE SYSTEM DETAILS	GB	MN	37S1

REVISIONS

R. Vallizadeh/V. Toan/Y.L./W.L./F.C.
DESIGN OVERSIGHT
SIGN OFF DATE 01/28/11

DESIGN BY G. Baker CHECKED J. Kulikl
DETAILS BY M. Gulyas CHECKED T. McMeans
QUANTITIES BY M. Gulyas CHECKED M. Roberts

PREPARED FOR THE STATE OF CALIFORNIA DEPARTMENT OF TRANSPORTATION

R. Manzanarez
PROJECT ENGINEER

BRIDGE NO. 34-0006L/R
KILOMETER POST 13.2/13.9

SAN FRANCISCO OAKLAND BAY BRIDGE
EAST SPAN SEISMIC SAFETY PROJECT
SELF-ANCHORED SUSPENSION BRIDGE
(SUPERSTRUCTURE & TOWER)
EAST CABLE ANCHORAGE "E" LINE LAYOUT NO. 2

Rev. Date: 5-18-98

ORIGINAL SCALE IN MILLIMETERS FOR REDUCED PLANS 0 10 20 30 40 50 60 70 80 90 100

CU 04
EA 0120F1

DISREGARD PRINTS BEARING EARLIER REVISION DATES 01/25/99 05/25/99 06/30/99 05/31/01 04/30/02 07/31/02 12/13/02

SHEET 315R1 OF

FILE => I:\bb\04-0120F1\sas\contract plans and cco\cco\cco-37s1\1-original 01-28-11\dgn\agan105.dgn

100 % PS&E

USERNAME => arivera DATE PLOTTED => 27 JAN 2011 TIME PLOTTED => 15:39:41

DIST.	COUNTY	ROUTE	KILOMETER POST TOTAL PROJECT	SHEET NO.	TOTAL SHEETS
04	SF	80	13.2/13.9	733R2	1204

George Baker
REGISTERED ENGINEER - CIVIL
12-6-04
PLANS APPROVAL DATE

REGISTERED PROFESSIONAL ENGINEER George S. Baker No. C57112 Exp. 12/31/05 CIVIL STATE OF CALIFORNIA

The State of California or its officers or agents shall not be responsible for the accuracy or completeness of electronic copies of this plan sheet.

T.Y. LIN / MOFFATT & NICHOL
825 BATTERY STREET
SAN FRANCISCO, CA 94111

Caltrans now has a web site! To get to the web site, go to: http://www.dot.ca.gov

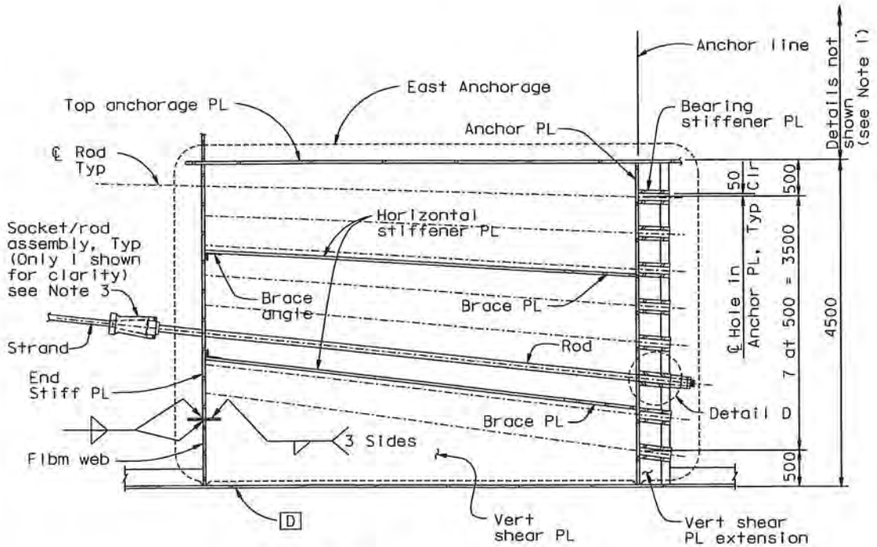

SECTION D-D
1:40

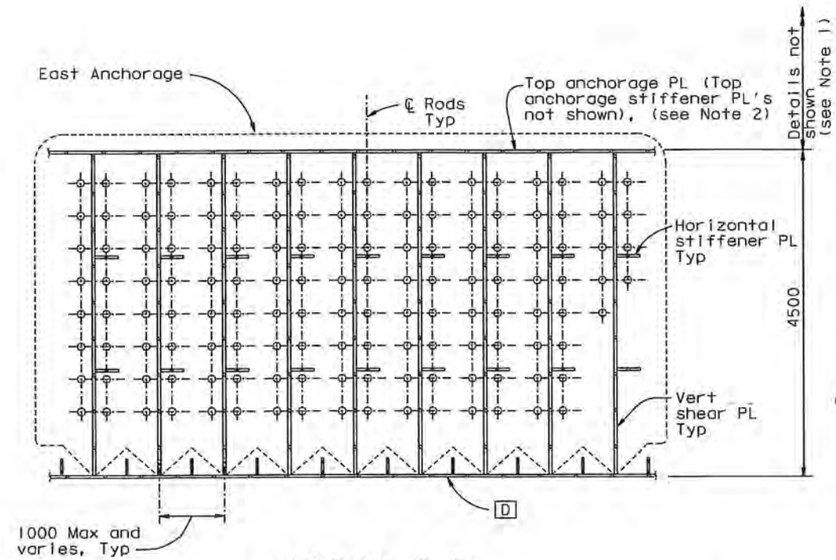

SECTION E-E
1:40

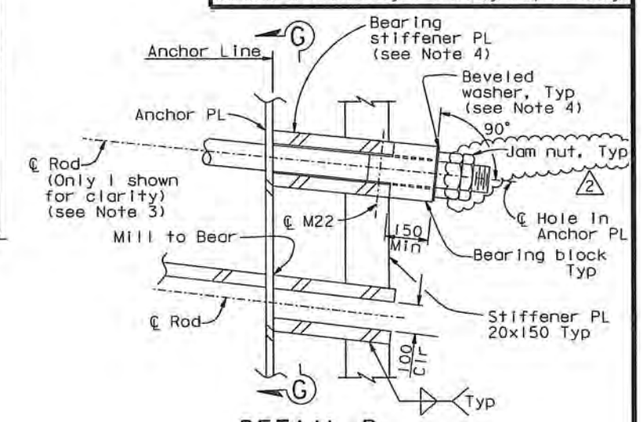

DETAIL D
1:10

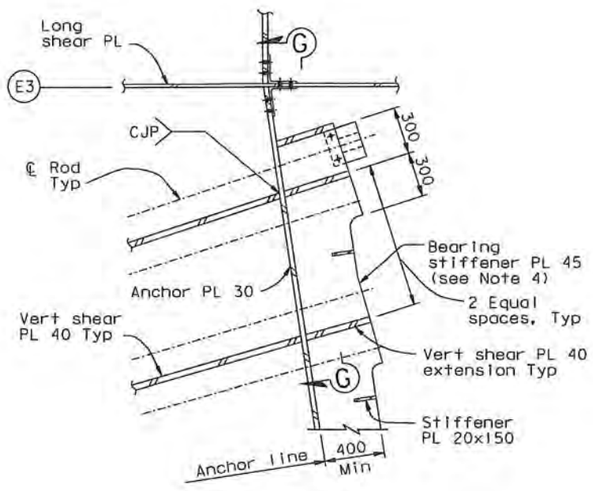

DETAIL C
1:20

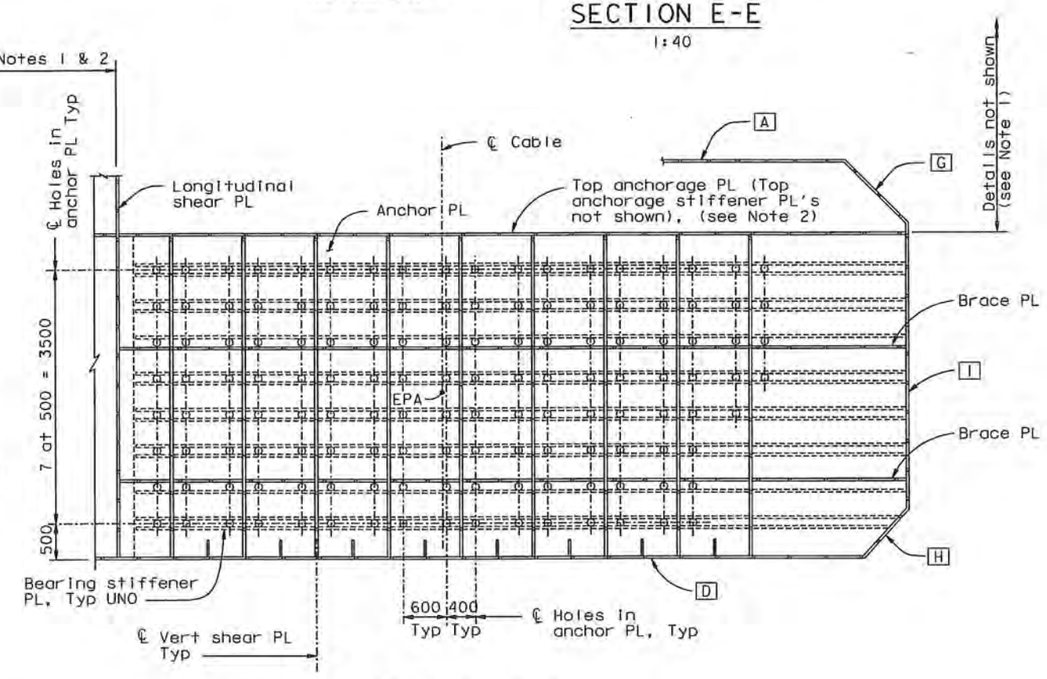

SECTION F-F
1:40

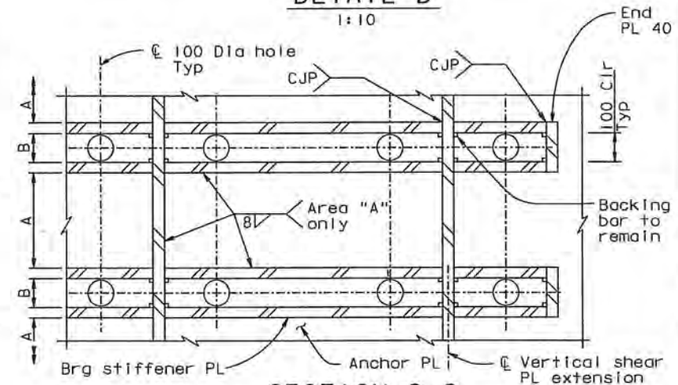

SECTION G-G
1:10

NOTES:

1. For girder details not shown, see "Girder At East Transition" sheets.
2. For top anchorage plate details not shown, see "Crossbeam at East Anchorage" and "Girder At East Transition" sheets.
3. For strand socket, transition anchor rod and bearing block details, see "East Cable Anchorage Details" sheet.
4. Bearing stiffener plates shall be machined to level the bearing block under the nut. Washers may be beveled to 1°.

REGISTERED PROFESSIONAL ENGINEER Daniel J. Turner No. C 65033 Exp. 06/30/11 CIVIL STATE OF CALIFORNIA

FOR REVISIONS ONLY

CONTRACT CHANGE ORDER NO. 37501
SHEET 4 OF 11

REQUESTS FOR INFORMATION NOT ADDRESSED IN THIS CCO REMAIN IN FORCE

ALL DIMENSIONS ARE IN MILLIMETERS UNLESS OTHERWISE SHOWN

MARK	DATE	DESCRIPTIONS	BY	CH'D	CCO#
2	01/28/11	MISCELLANEOUS CABLE SYSTEM DETAILS	DT	GB	37S1
1	08/28/09	BEARING BLOCKS	DT	GB	78

REVISIONS

R. Valizadeh/V. Toan/Y.L./W.L./F.C.
DESIGN OVERSIGHT
SIGN OFF DATE 01/28/11

	BY	CHECKED
DESIGN	G. Baker	J. Kullke
DETAILS	M. Guylas	T. McMeans
QUANTITIES	M. Guylas	M. Roberts

PREPARED FOR THE STATE OF CALIFORNIA DEPARTMENT OF TRANSPORTATION

R. Manzanarez
PROJECT ENGINEER

BRIDGE NO. 34-0006L/R
KILOMETER POST 13.2/13.9

SAN FRANCISCO OAKLAND BAY BRIDGE
EAST SPAN SEISMIC SAFETY PROJECT
SELF-ANCHORED SUSPENSION BRIDGE
(SUPERSTRUCTURE & TOWER)
EAST CABLE ANCHORAGE "E" LINE LAYOUT NO. 3

Rev. Date: 5-18-95

ORIGINAL SCALE IN MILLIMETERS FOR REDUCED PLANS 0 10 20 30 40 50 60 70 80 90 100

CU 04
EA 0120F1

DISREGARD PRINTS BEARING EARLIER REVISION DATES

REVISION DATES (PRELIMINARY STAGE ONLY) 01/29/99 05/13/99 09/08/99 05/24/01 04/08/02 01/04/02 12/18/02 11/13/03

SHEET 316R2 OF

FILE => I:\bb\04-01200I\sas\contract plans and cco\cco\cco*37s1\1-original 01-28-11\dgn\ogan106.dgn

100 % PS&E

USERNAME => orivera DATE PLOTTED => 27 JAN 2011 TIME PLOTTED => 15:54:24

NOTES:

1. For details of longitudinal shear plate between P125 and PP127, see "Girder At East Transition No. 16" sheet.
2. For details of splice connection at girder plate and vertical plate convergence, see "East Cable Anchorage Details" sheet.
3. For strand socket and anchor rod details, see "East Cable Anchorage Details" sheet.
4. For Detail C and Sections D-D, E-E and F-F, see "East Cable Anchorage "W" Line Layout No. 3" sheet.
5. Machining of bearing stiffener not shown in plan view.

To get to the web site, go to: http://www.dot.ca.gov

Caltrans Metric

DIST.	COUNTY	ROUTE	KILOMETER POST TOTAL PROJECT	SHEET NO.	TOTAL SHEETS
04	SF	80	13.2/13.9	735R1	1204

George Baker
REGISTERED ENGINEER - CIVIL
12-6-04
PLANS APPROVAL DATE

REGISTERED PROFESSIONAL ENGINEER George S. Baker No. C57112 Exp. 12/31/05 CIVIL STATE OF CALIFORNIA

The State of California or its officers or agents shall not be responsible for the accuracy or completeness of electronic copies of this plan sheet.

T.Y. LIN / MOFFATT & NICHOL
825 BATTERY STREET
SAN FRANCISCO, CA 94111

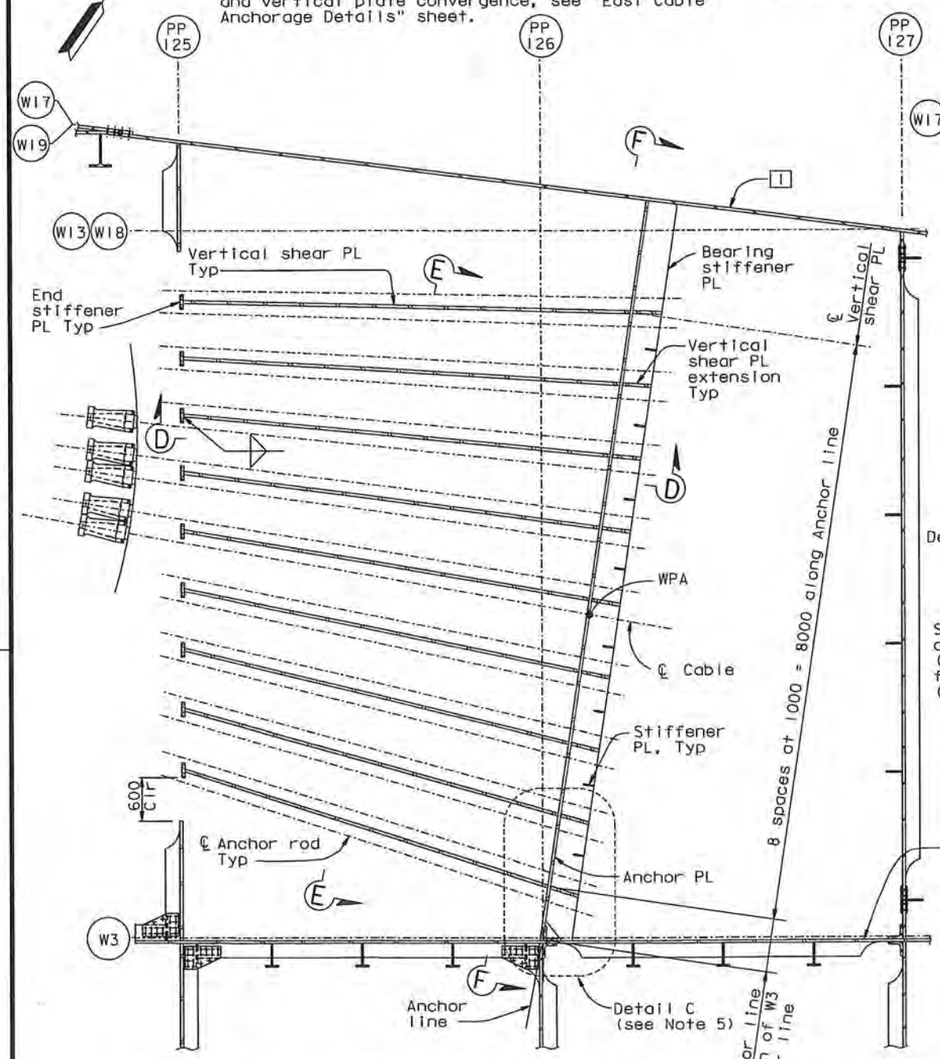

AT LEVEL OF TYPICAL BEARING STIFFENER

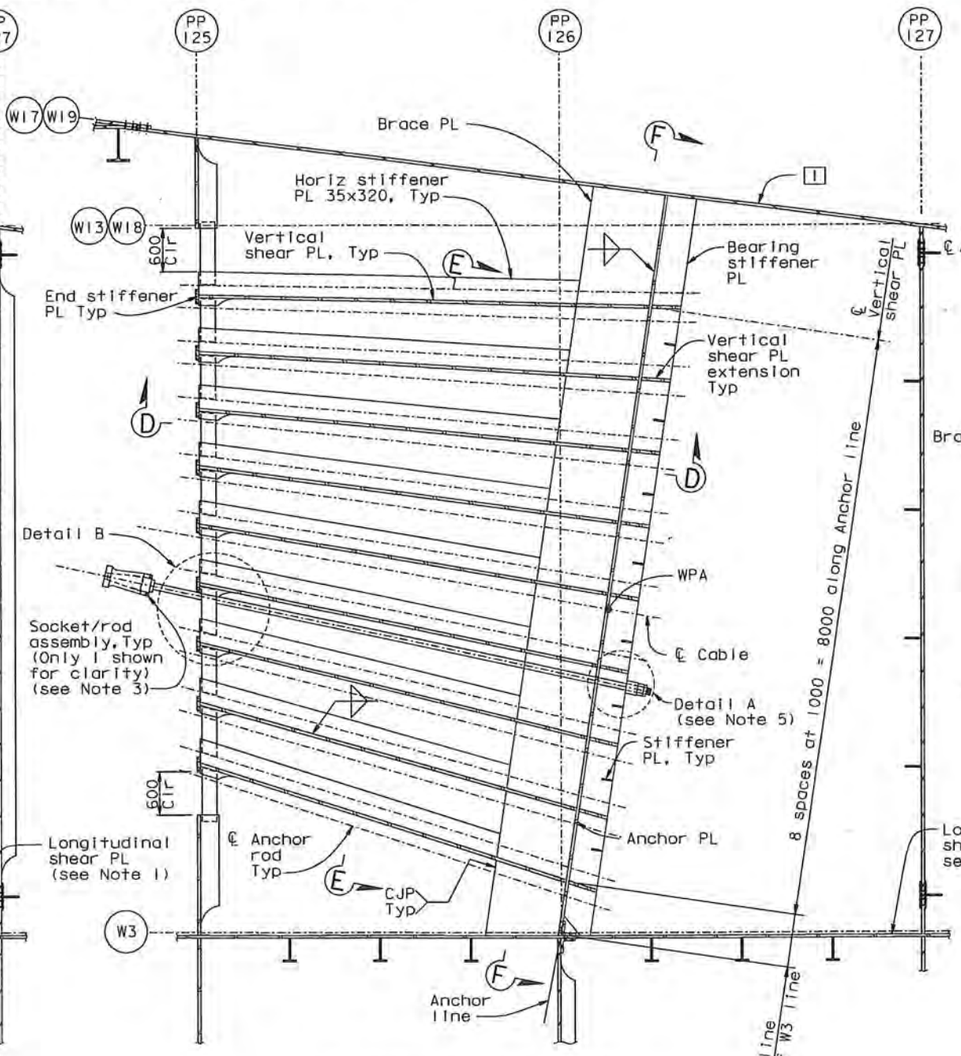

AT LEVEL OF BRACE PLATE

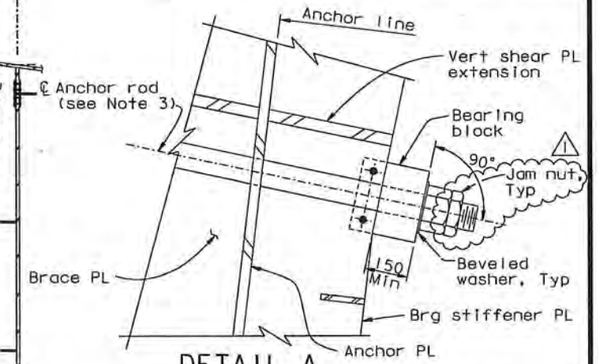

DETAIL A
1:10

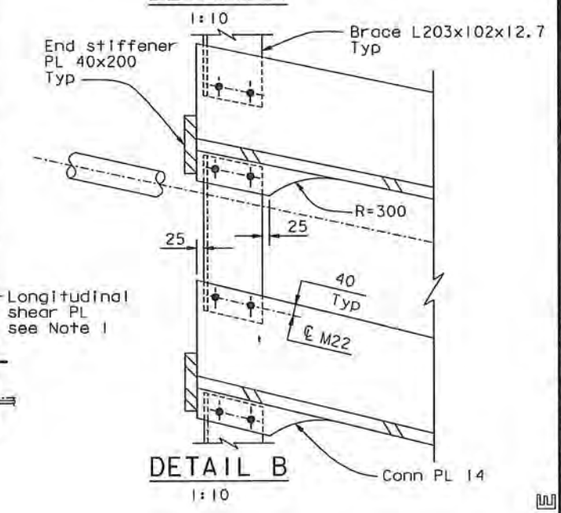

DETAIL B
1:10

PLAN SECTION C-C
1:40

ALL DIMENSIONS ARE IN MILLIMETERS UNLESS OTHERWISE SHOWN

Marwan N. Nader
REGISTERED PROFESSIONAL ENGINEER No. C 054426 Exp. 12/31/11 CIVIL STATE OF CALIFORNIA
FOR REVISIONS ONLY

CONTRACT CHANGE ORDER NO. 37S01
SHEET 5 OF 11

REQUESTS FOR INFORMATION NOT ADDRESSED IN THIS CCO REMAIN IN FORCE

100 % PS&E

MARK	DATE	DESCRIPTIONS	BY	CH'D	CCO#
1	01/28/11	MISCELLANEOUS CABLE SYSTEM DETAILS	GB	MN	37S1

REVISIONS

R. Vallizadeh/V. Toan/Y.L./W.L./F.C.
DESIGN OVERSIGHT
SIGN OFF DATE 01/28/11

	BY	CHECKED	
DESIGN	G. Baker	J. Kulikl	
DETAILS	M. Gulyas	T. McMeans	
QUANTITIES	M. Gulyas	M. Roberts	

PREPARED FOR THE STATE OF CALIFORNIA DEPARTMENT OF TRANSPORTATION

R. Manzanarez
PROJECT ENGINEER

BRIDGE NO. 34-0006L/R
KILOMETER POST 13.2/13.9

SAN FRANCISCO OAKLAND BAY BRIDGE
EAST SPAN SEISMIC SAFETY PROJECT
SELF-ANCHORED SUSPENSION BRIDGE
(SUPERSTRUCTURE & TOWER)
EAST CABLE ANCHORAGE "W" LINE LAYOUT NO. 2

Rev. Date: 5-18-98

ORIGINAL SCALE IN MILLIMETERS FOR REDUCED PLANS 0 10 20 30 40 50 60 70 80 90 100

CU 04
EA 0120F1

DISREGARD PRINTS BEARING EARLIER REVISION DATES
REVISION DATES (PRELIMINARY STAGE ONLY) 01/30/99 05/03/99 08/02/99 05/30/01 04/08/02 07/26/02 12/19/02

SHEET 318R1 OF

FILE => I:\bb\04-01200I\sas\contract plans and cco\cco\cco*37s1\1-original 01-28-11\dgn\dgan108.dgn

USERNAME => drivera DATE PLOTTED => 27 JAN 2011 TIME PLOTTED => 15:55:18

DIST.	COUNTY	ROUTE	KILOMETER POST TOTAL PROJECT	SHEET NO.	TOTAL SHEETS
04	SF	80	13.2/13.9	736R2	1204

George Baker
REGISTERED ENGINEER - CIVIL
12-6-04
PLANS APPROVAL DATE

REGISTERED PROFESSIONAL ENGINEER George S. Baker No. C57112 Exp. 12/31/05 CIVIL STATE OF CALIFORNIA

The State of California or its officers or agents shall not be responsible for the accuracy or completeness of electronic copies of this plan sheet.

T.Y. LIN / MOFFATT & NICHOL
825 BATTERY STREET
SAN FRANCISCO, CA 94111

Caltrans now has a web site! To get to the web site, go to: http://www.dot.ca.gov

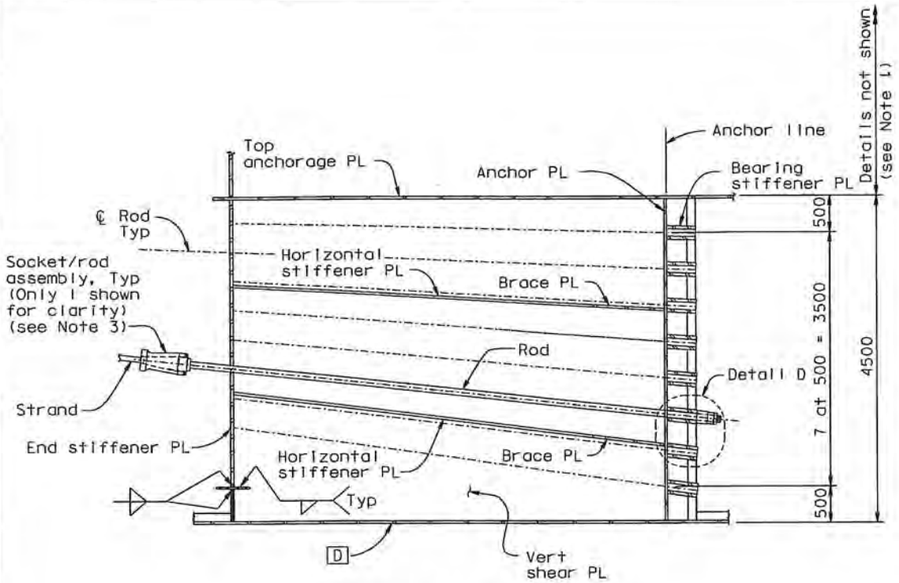

SECTION D-D
1:40

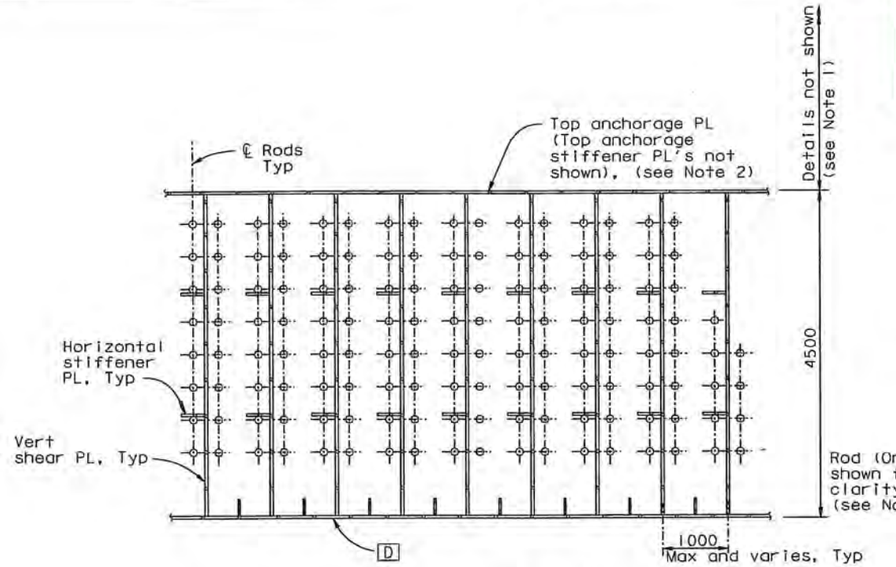

SECTION E-E
1:40

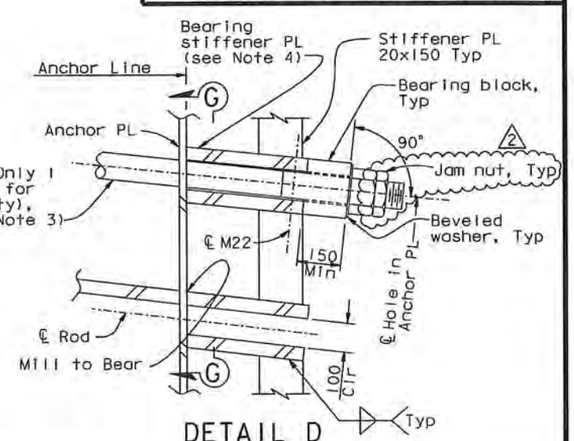

DETAIL D
1:10

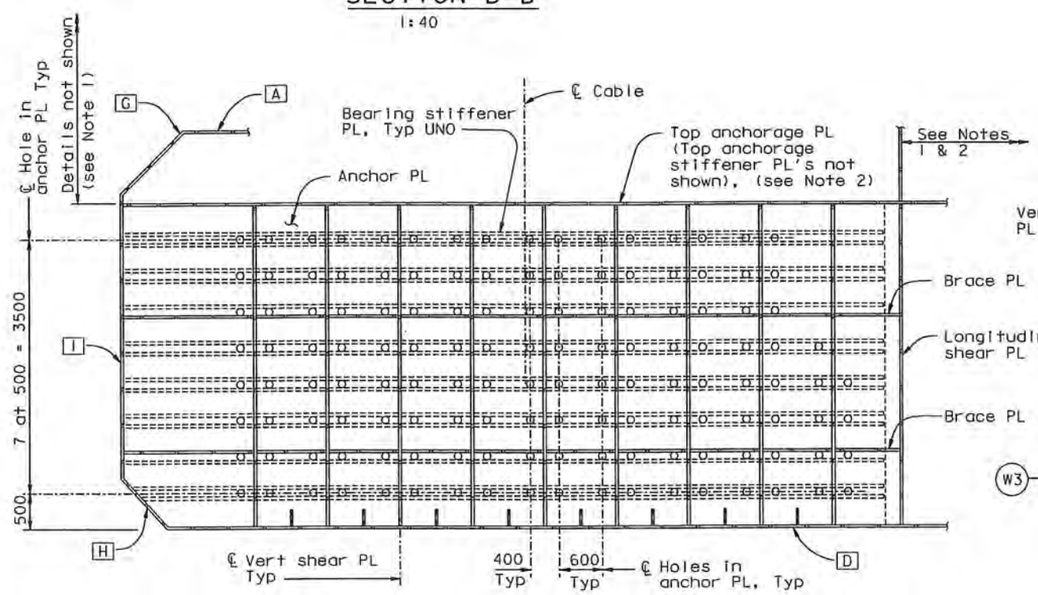

SECTION F-F
1:40

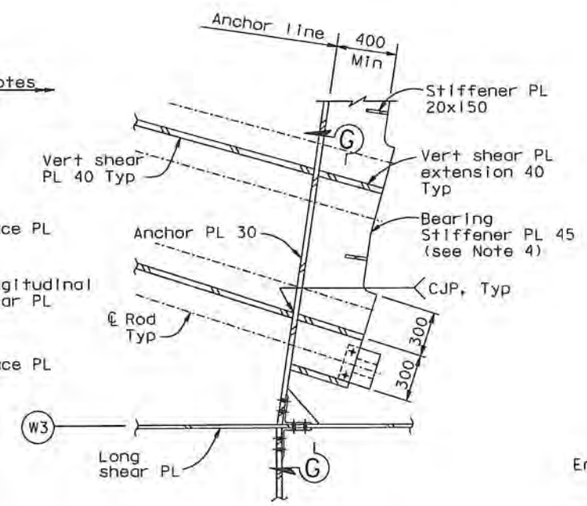

DETAIL C
1:20

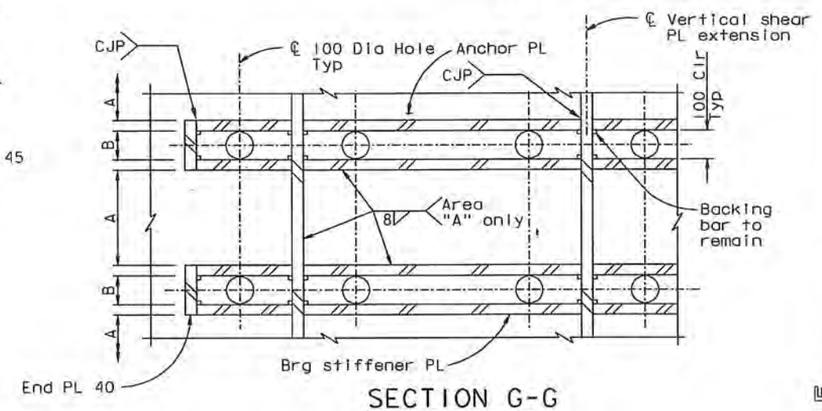

SECTION G-G
1:10

NOTES:

1. For girder details not shown, see "Girder At East Transition" sheets.
2. For top anchorage plate details not shown, see "Crossbeam At East Anchorage" and "Girder At East Transition" sheets.
3. For strand socket, transition anchor rod and bearing block details, see "East Cable Anchorage Details" sheet.
4. Bearing stiffeners plates shall be machined to level the bearing block under the nut. Washers may be beveled to 1°.

REGISTERED PROFESSIONAL ENGINEER Daniel J. Turner No. C 65033 Exp. 06/30/11 CIVIL STATE OF CALIFORNIA

FOR REVISIONS ONLY

CONTRACT CHANGE ORDER NO. 37s01
SHEET 6 OF 11

REQUESTS FOR INFORMATION NOT ADDRESSED IN THIS CCO REMAIN IN FORCE

ALL DIMENSIONS ARE IN MILLIMETERS UNLESS OTHERWISE SHOWN

MARK	DATE	DESCRIPTIONS	BY	CH'D	CCO#
2	01/28/11	MISCELLANEOUS CABLE SYSTEM DETAILS	DT	GB	37S1
1	08/28/09	BEARING BLOCKS	DT	GB	78

REVISIONS

R. Vaziazadeh/V. Toan/Y.L./W.L./F.C.
DESIGN OVERSIGHT
SIGN OFF DATE 01/28/11

Rev. Date: 5-18-98

	BY	CHECKED
DESIGN	G. Baker	J. Kulikl
DETAILS	M. Guiyas	T. McMeans
QUANTITIES	M. Guiyas	M. Roberts

PREPARED FOR THE STATE OF CALIFORNIA DEPARTMENT OF TRANSPORTATION

R. Manzanarez
PROJECT ENGINEER

BRIDGE NO. 34-0006L/R
KILOMETER POST 13.2/13.9

SAN FRANCISCO OAKLAND BAY BRIDGE
EAST SPAN SEISMIC SAFETY PROJECT
SELF-ANCHORED SUSPENSION BRIDGE
(SUPERSTRUCTURE & TOWER)
EAST CABLE ANCHORAGE "W" LINE LAYOUT NO. 3

CU 04
EA 0120F1

ORIGINAL SCALE IN MILLIMETERS FOR REDUCED PLANS 0 10 20 30 40 50 60 70 80 90 100

DISREGARD PRINTS BEARING EARLIER REVISION DATES

REVISION DATES (PRELIMINARY STAGE ONLY) 01/28/99 05/24/99 08/08/99 05/24/01 01/08/02 01/24/02 12/18/02 11/13/05

SHEET 319R2 OF

FILE => I:\bb\04-012001\sas\contract plans and cco\cco\cco*37s1\1-original 01-28-11\dgn\agan109.dgn

100 % PS&E

USERNAME => arivera DATE PLOTTED => 27 JAN 2011 TIME PLOTTED => 15:55:53

DIST.	COUNTY	ROUTE	KILOMETER POST TOTAL PROJECT	SHEET NO.	TOTAL SHEETS
04	SF	80	13.2/13.9	737R2	1204

George Baker
REGISTERED ENGINEER - CIVIL
12-6-04
PLANS APPROVAL DATE
REGISTERED PROFESSIONAL ENGINEER George S. Baker No. C57112 Exp. 12/31/05 CIVIL STATE OF CALIFORNIA

The State of California or its officers or agents shall not be responsible for the accuracy or completeness of electronic copies of this plan sheet.

T.Y. LIN / MOFFATT & NICHOL
825 BATTERY STREET
SAN FRANCISCO, CA 94111

Caltrans now has a web site! To get to the web site, go to: http://www.dot.ca.gov

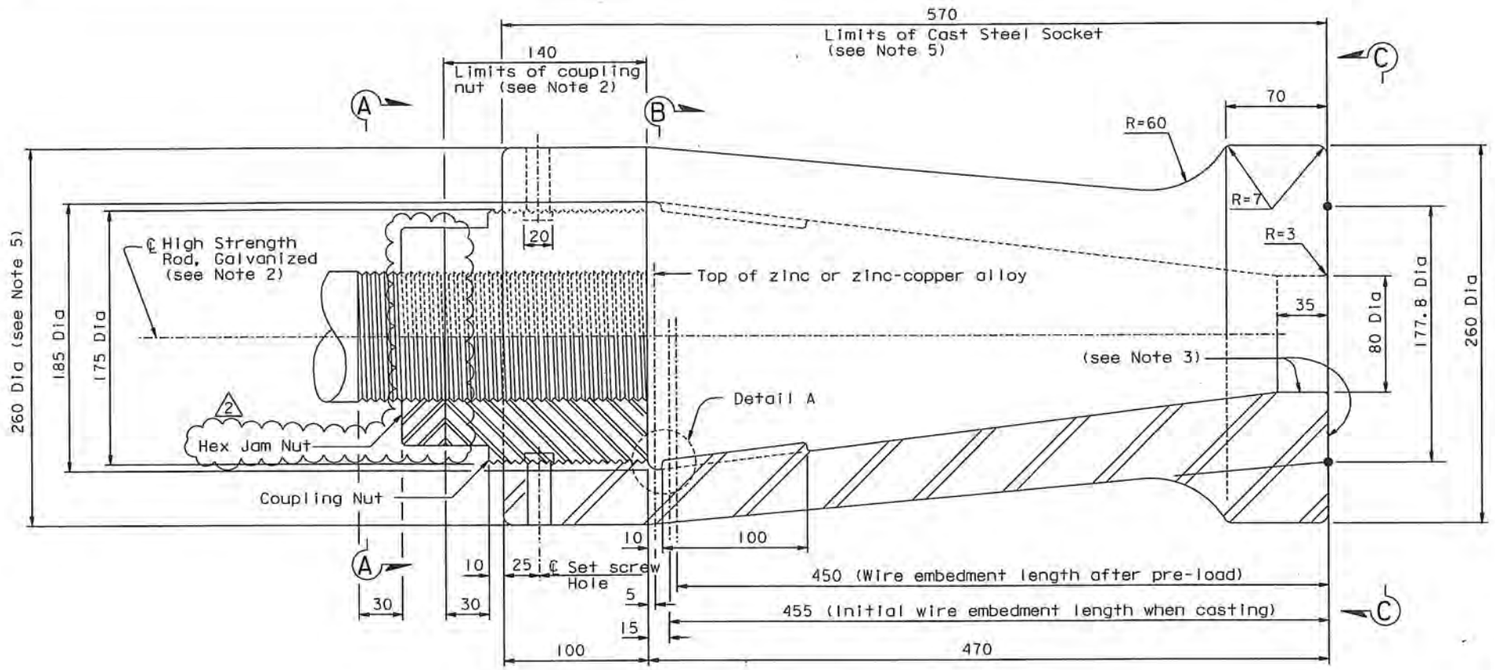

SOCKET DETAIL
1:2

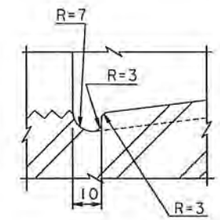

DETAIL A
1:1

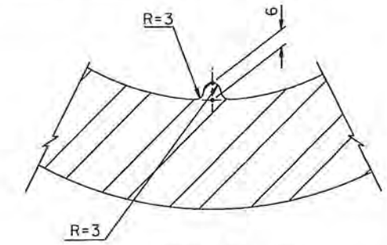

DETAIL B
1:1

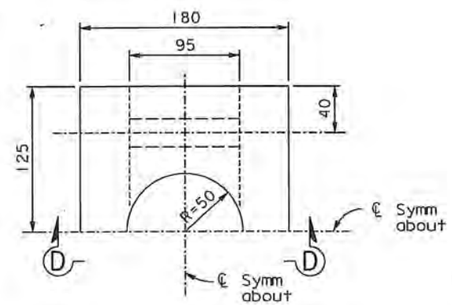

PLAN

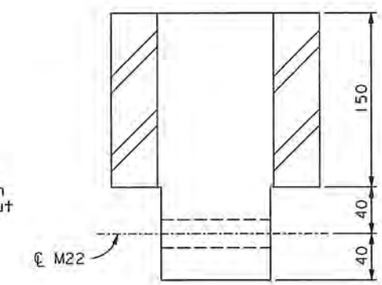

SECTION D-D

BEARING BLOCK DETAIL (See Note 6)
1:2.5

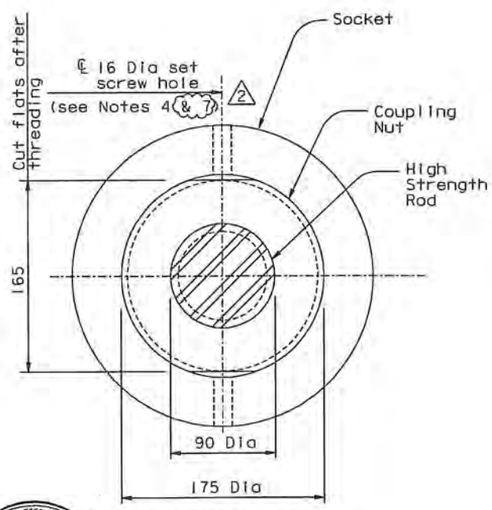

VIEW A-A
1:2.5

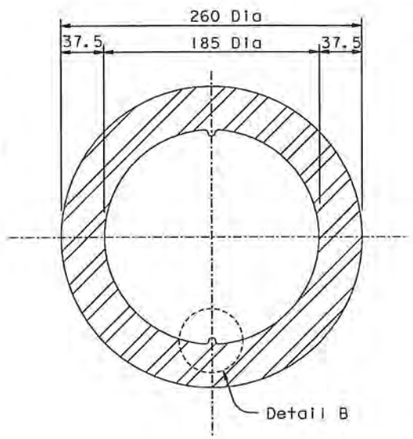

SECTION B-B
1:2.5

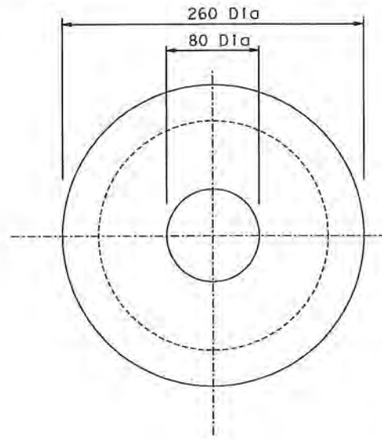

VIEW C-C
1:2.5

NOTES:

1. Coupling nut and socket shall conform to ASTM A194 GR 7, with 4 threads per inch.
2. For main cable strand anchor rod and cable strand socket materials, see "General Notes" sheets.
3. Surface shall be finished to ANSI 500.
4. Provide 16 Dia stainless set screws in threaded hole.
5. All socket dimensions are for information only. The Contractor shall develop socket details consistent with his means and methods and the east cable anchorage geometry, and shall submit them to the Engineer for review and approval. The socket dimensions shall be such that adequate prestressing and erection clearance is provided.
6. Material for bearing blocks shall be ASTM A668 Grade F, or ASTM A148 Grade 550-345.
7. Thread locking compound shall be used to secure the coupling nut set screws. (2)

Daniel J. Turner
REGISTERED PROFESSIONAL ENGINEER Daniel J. Turner No. C 65033 Exp. 06/30/11 CIVIL STATE OF CALIFORNIA

FOR REVISIONS ONLY

CONTRACT CHANGE ORDER NO. 37S01
SHEET 7 OF 11

REQUESTS FOR INFORMATION NOT ADDRESSED IN THIS CCO REMAIN IN FORCE

ALL DIMENSIONS ARE IN MILLIMETERS UNLESS OTHERWISE SHOWN

MARK	DATE	DESCRIPTIONS	BY	CH'D	CCO#
2	02/18/11	MISCELLANEOUS CABLE SYSTEM DETAILS	DT	GB	37S1
1	08/28/09	BEARING BLOCKS	DT	GB	78

REVISIONS

R. Vallizadeh/V. Toan/Y.L./W.L./F.C.
DESIGN OVERSIGHT
Roya Vallizadeh / Vong Toan / Y. Liu
SIGN OFF DATE 02/18/11

DESIGN	BY G. Baker	CHECKED J. Kulikl	
DETAILS	BY M. Gulyas	CHECKED T. McMeans	
QUANTITIES	BY M. Gulyas	CHECKED M. Roberts	

PREPARED FOR THE STATE OF CALIFORNIA DEPARTMENT OF TRANSPORTATION

R. Manzanarez
PROJECT ENGINEER

BRIDGE NO. 34-0006L/R
KILOMETER POST 13.2/13.9

SAN FRANCISCO OAKLAND BAY BRIDGE
EAST SPAN SEISMIC SAFETY PROJECT
SELF-ANCHORED SUSPENSION BRIDGE
(SUPERSTRUCTURE & TOWER)

EAST CABLE ANCHORAGE DETAILS

Rev. Date: 5-18-98

ORIGINAL SCALE IN MILLIMETERS FOR REDUCED PLANS 0 10 20 30 40 50 60 70 80 90 100

CU 04
EA 0120F1

DISREGARD PRINTS BEARING EARLIER REVISION DATES

REVISION DATES (PRELIMINARY STAGE ONLY) 08/27/99 05/31/01 04/08/02 07/24/02 12/13/02

SHEET 320R2 OF

FILE => L:\BB\04-012001\SAS\Contract Plans and CCO\CCO\CCO=37S1\1-Update 02-18-11\DGN\agand08a.dgn

100 % PS&E

USERNAME => DWinrow DATE PLOTTED => 18 FEB 2011 TIME PLOTTED => 11:10:35

DIST.	COUNTY	ROUTE	KILOMETER POST TOTAL PROJECT	SHEET NO.	TOTAL SHEETS
04	SF	80	13.2/13.9	744R3	1204

George Baker
REGISTERED ENGINEER - CIVIL

1-27-03
PLANS APPROVAL DATE

REGISTERED PROFESSIONAL ENGINEER George S. Baker No. C 57112 Exp. 12/31/05 CIVIL STATE OF CALIFORNIA

The State of California or its officers or agents shall not be responsible for the accuracy or completeness of electronic copies of this plan sheet.

T.Y. LIN / MOFFATT & NICHOL
825 BATTERY STREET
SAN FRANCISCO, CA 94111

Caltrans now has a web site! To get to the web site, go to: http://www.dot.ca.gov

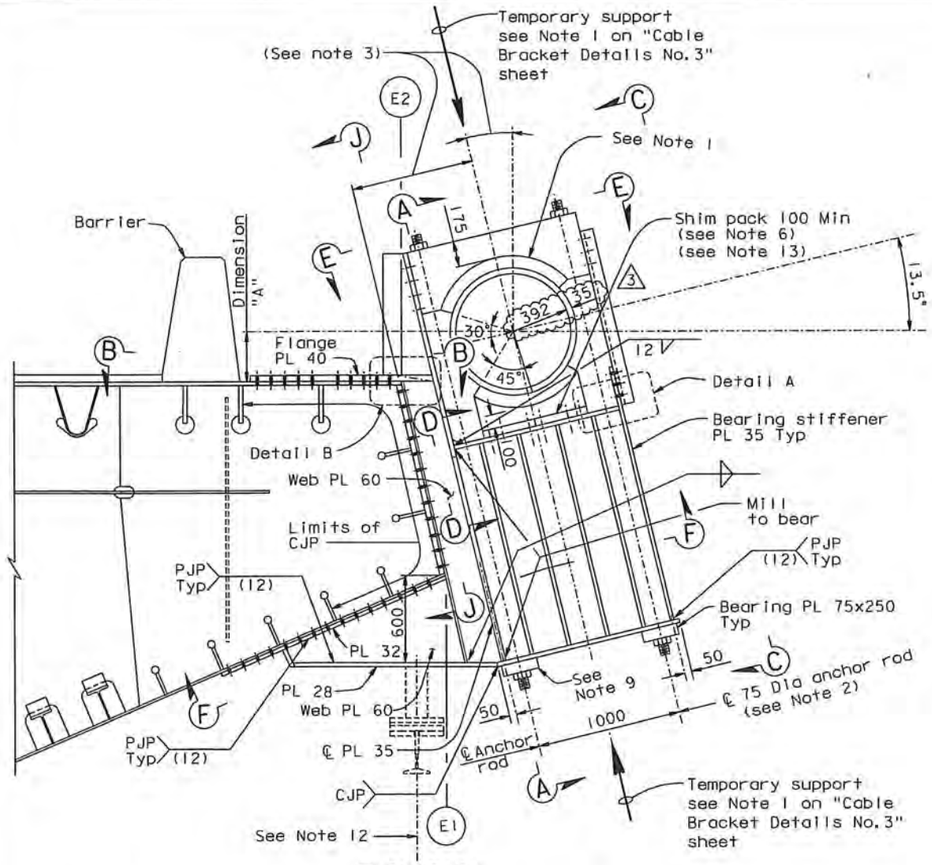

ELEVATION

CABLE BRACKET AT PP 112, 114 AND 116

1:20 (PP 110 similar) (See Note 14)

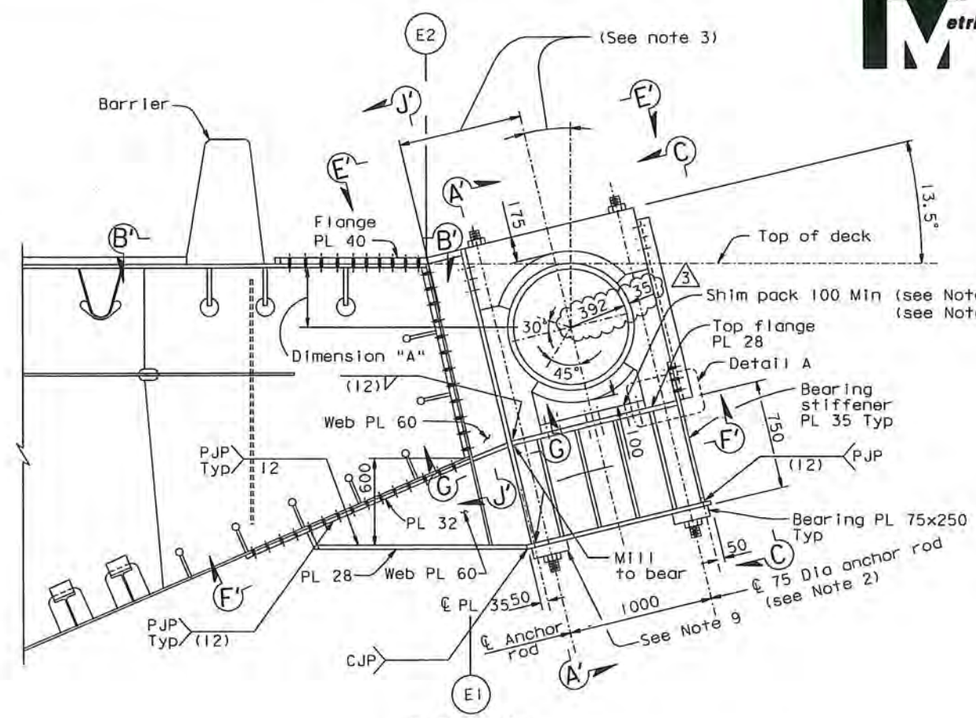

ELEVATION

ALTERNATIVE CABLE BRACKET (See Note 4)

1:20

PANEL POINT	DIMENSION "A" (SEE NOTE 3)	
	NORTH CABLE	SOUTH CABLE
110	960	1075 Above deck
112	545 Above deck	630 Above deck
114	240 Above deck	300 Above deck
116	0.0	0.0
ALTERNATIVE	BELOW DECK	BELOW DECK

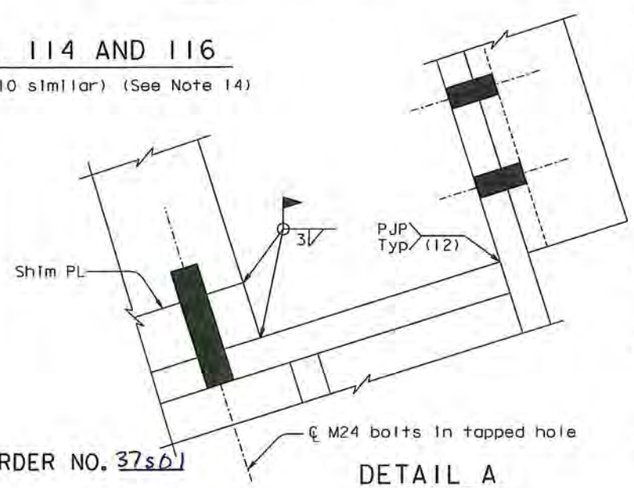

DETAIL A

1:2.5

NOTES:

1. For details of elastomeric bearing see "Cable Band Details No. 5" sheet.
2. For anchor rod material, see "General Notes" sheet.
3. The Contractor shall compute dimension "A" for construction using the cable profile of his Erection Plan. All permanent components shall be fabricated to fit the computed cable profile.
4. If Contractor's actual cable center lies below top of deck the alternative bracket may be used.
5. At PP114 and PP116 the brackets should be located so as to apply no load to the cable at the completion of construction.
6. The Contractor shall allow for the compression of the elastomeric bearing due to the permanent anchor rods in his fabrication and shimming. See "Cable Bracket Details No. 3" sheet.
7. For "Cable Bracket Details" sheets all bolts shall be detailed according to the "Bolt Dimension Table". See "Typical Girder Details No. 1" sheet. All bolts are HS, unless noted otherwise.
8. For "Cable Bracket Details" sheets, unless noted otherwise all fillet welds shall be 6 mm for plate sizes not greater than 20 mm. For plates greater than 20 mm, fillet welds shall be 8 mm, unless noted otherwise.
9. At PP116 rod bearing interferes with traveler rails. For alternative rod bearing, see Detail C on "Cable Bracket Details No. 2" sheet.
10. For Sections A-A, A'-A', B-B, B'-B', C-C, D-D and Detail B, see "Cable Bracket Details No. 2" sheet.
11. For Views E-E, E'-E', Sections F-F, F'-F', G-G, J-J and J'-J', see "Cable Bracket Details No. 3" sheet.
12. For location and details of traveler rail support, see "Traveler Rail Details" sheets.
13. Shim plate thickness shall be 10 mm each.
14. The Contractor shall provide shop drawings for two cable brackets and for two suspender brackets at PP 110 ("E" line and "W" line). The Contractor shall fabricate and install either a cable bracket or a suspender bracket at PP 110 ("E" line and "W" line) as directed by the Engineer. For suspender bracket details see "Suspender Bracket Details" sheets.

REGISTERED PROFESSIONAL ENGINEER Marwan N. Nader No. C 054426 Exp. 12/31/11 CIVIL STATE OF CALIFORNIA

FOR REVISIONS ONLY

CONTRACT CHANGE ORDER NO. 37s01
SHEET 8 OF 11

REQUESTS FOR INFORMATION NOT ADDRESSED IN THIS CCO REMAIN IN FORCE

MARK	DATE	DESCRIPTIONS	BY	CH'D	CCO#
3	01/28/11	MISCELLANEOUS CABLE SYSTEM DETAILS	GB	MN	37S1
2	12/18/09	SUSPENDER BRACKETS	GB	MN	104
1	02/20/09	SUSPENDER BRACKETS	GB	MN	104

REVISIONS

ALL DIMENSIONS ARE IN MILLIMETERS UNLESS OTHERWISE SHOWN

R. Vallzadeh/V. Toan/Y.L./W.L./F.C.
DESIGN OVERSIGHT
SIGN OFF DATE 01/28/11

	BY	CHECKED	
DESIGN	G. Baker	CHECKED	T. McMeans
DETAILS	S. Como	CHECKED	T. McMeans
QUANTITIES	D. Turner	CHECKED	C. Mibelli

PREPARED FOR THE STATE OF CALIFORNIA DEPARTMENT OF TRANSPORTATION

R. Manzanarez
PROJECT ENGINEER

BRIDGE NO. 34-0006L/R
KILOMETER POST 13.2/13.9

SAN FRANCISCO OAKLAND BAY BRIDGE
EAST SPAN SEISMIC SAFETY PROJECT
SELF-ANCHORED SUSPENSION BRIDGE
(SUPERSTRUCTURE & TOWER)

CABLE BRACKET DETAILS NO. 1

Rev. Date: 5-18-98

ORIGINAL SCALE IN MILLIMETERS FOR REDUCED PLANS 0 10 20 30 40 50 60 70 80 90 100

CU 04
EA 0120F1

DISREGARD PRINTS BEARING EARLIER REVISION DATES 09/07/99 05/24/00 04/06/02 01/28/02 12/13/02

SHEET 327R3 OF

FILE => I:\bb\04-01200I\sas\contract plans and cco\cco\cco=37s1\1-original 01-28-11\dgn\agcbr01.dgn

USERNAME => arivera DATE PLOTTED => 27 JAN 2011 TIME PLOTTED => 15:57:02

100 % PS&E

DIST.	COUNTY	ROUTE	KILOMETER POST TOTAL PROJECT	SHEET NO.	TOTAL SHEETS
04	SF	80	13.2/13.9	751R2	1204

George Baker
REGISTERED ENGINEER - CIVIL

12-6-04
PLANS APPROVAL DATE

The State of California or its officers or agents shall not be responsible for the accuracy or completeness of electronic copies of this plan sheet.

REGISTERED PROFESSIONAL ENGINEER George S. Baker No. C 57112 Exp. 12/31/05 CIVIL STATE OF CALIFORNIA

T.Y. LIN / MOFFATT & NICHOL
825 BATTERY STREET
SAN FRANCISCO, CA 94111

Caltrans now has a web site! To get to the web site, go to: http://www.dot.ca.gov

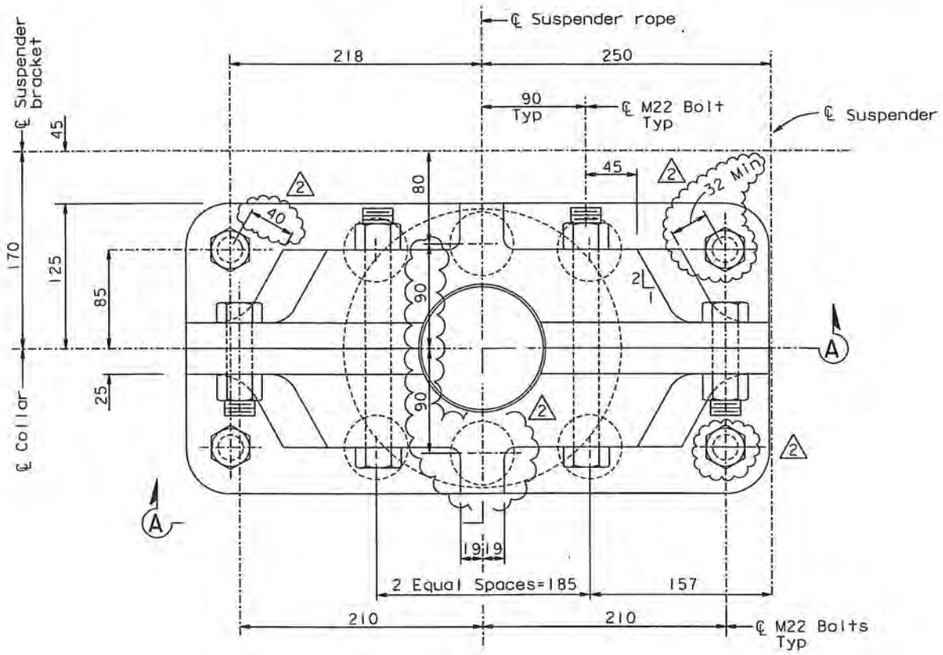

PLAN

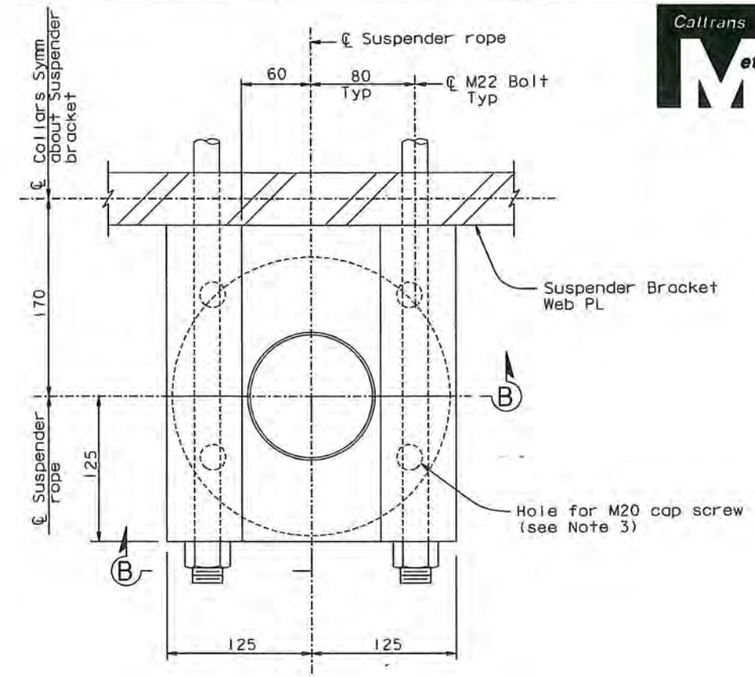

PLAN

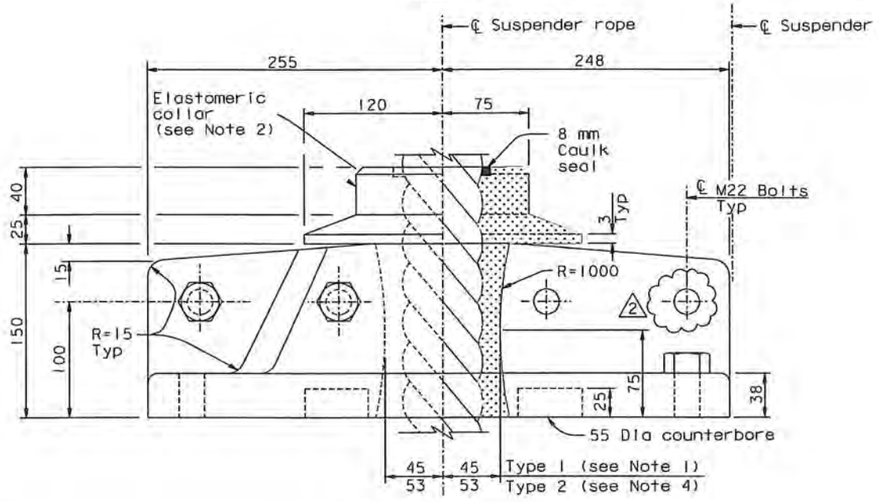

ELEVATION A-A

SPLIT COLLAR DETAIL
1:2.5

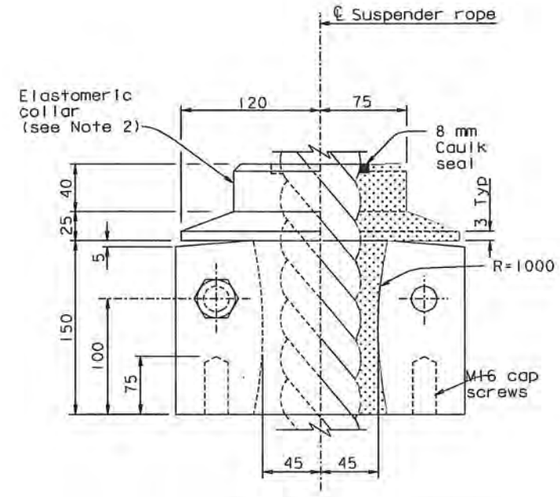

ELEVATION B-B

SPLIT COLLAR DETAIL
AT PANEL POINTS 104 TO 110
1:2.5

LEGEND:

Elastomeric collar in section

NOTES:

1. For location of suspender types, see "Suspender Layout No. 1" sheet.
2. Elastomeric collars shall be polyurethane, durometer 60, molded to fit suspender ropes.
3. Holes shall match those of seat plate detail, see "Suspender Bracket No. 6" sheet.
4. Collar dimension shown is for a 90 mm suspender rope size. If larger rope size is used, the dimension shall be equal to the rope radius plus 8 mm.

REGISTERED PROFESSIONAL ENGINEER Daniel J. Turner No. C 65033 Exp. 06/30/11 CIVIL STATE OF CALIFORNIA

FOR REVISIONS ONLY

CONTRACT CHANGE ORDER NO. 37S01
SHEET 9 OF 11

REQUESTS FOR INFORMATION NOT ADDRESSED IN THIS CCO REMAIN IN FORCE

ALL DIMENSIONS ARE IN MILLIMETERS UNLESS OTHERWISE SHOWN

100 % PS&E

MARK	DATE	DESCRIPTIONS	BY	CH'D	CCO#
2	02/18/11	MISCELLANEOUS CABLE SYSTEM DETAILS	GB	DT	37S1
1	04/16/07	CABLE SYSTEM	GB	DT	37

REVISIONS

R. Valizadeh/V. Toan/Y.L./W.L./F.C.
DESIGN OVERSIGHT
SIGN OFF DATE 02/18/11

	BY	CHECKED
DESIGN	G. Baker	T. McMeans
DETAILS	S. Camo	P. Ritchie
QUANTITIES	C. Mauch	C. Mibelli

PREPARED FOR THE STATE OF CALIFORNIA DEPARTMENT OF TRANSPORTATION

R. Manzanarez
PROJECT ENGINEER

BRIDGE NO. 34-0006L/R
KILOMETER POST 13.2/13.9

SAN FRANCISCO OAKLAND BAY BRIDGE
EAST SPAN SEISMIC SAFETY PROJECT
SELF-ANCHORED SUSPENSION BRIDGE
(SUPERSTRUCTURE & TOWER)

SUSPENDER BRACKET DETAILS NO. 5

Rev. Date: 5-18-98

ORIGINAL SCALE IN MILLIMETERS FOR REDUCED PLANS 0 10 20 30 40 50 60 70 80 90 100

CU 04
EA 0120F1

DISREGARD PRINTS BEARING EARLIER REVISION DATES

REVISION DATES (PRELIMINARY STAGE ONLY) 05/15/99 08/02/99 05/31/01 04/08/02 07/01/02 12/19/02

SHEET 334R2 OF

FILE => I:\bb\04-012001\sas\contract plans and cco\cco\cco#37s1\1-update 02-18-11\dgn\agsad12b.dgn

USERNAME => DWinrow DATE PLOTTED => 18 FEB 2011 TIME PLOTTED => 11:12:10

DIST.	COUNTY	ROUTE	KILOMETER POST TOTAL PROJECT	SHEET NO.	TOTAL SHEETS
04	SF	80	13.2/13.9	761R1	1204

George Baker
REGISTERED ENGINEER - CIVIL
12-6-04
PLANS APPROVAL DATE

REGISTERED PROFESSIONAL ENGINEER George S. Baker No. C 57112 Exp. 12/31/05 CIVIL STATE OF CALIFORNIA

The State of California or its officers or agents shall not be responsible for the accuracy or completeness of electronic copies of this plan sheet.

T.Y. LIN / MOFFATT & NICHOL
825 BATTERY STREET
SAN FRANCISCO, CA 94111

Caltrans now has a web site! To get to the web site, go to: http://www.dot.ca.gov

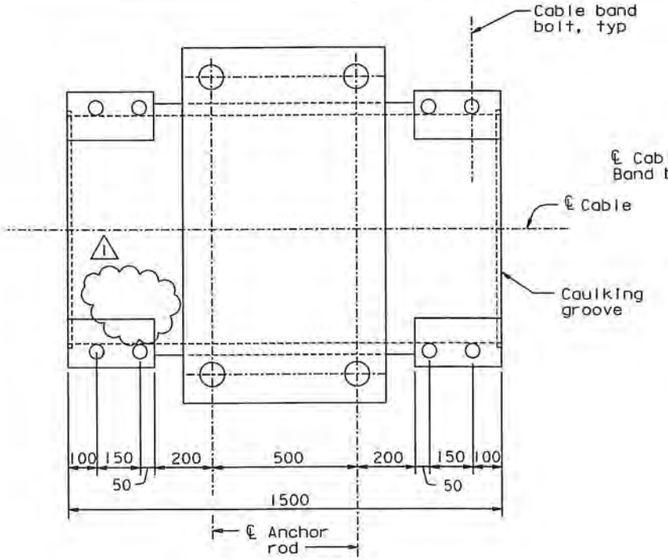

PLAN VIEW
(View parallel to the Cable Plane)

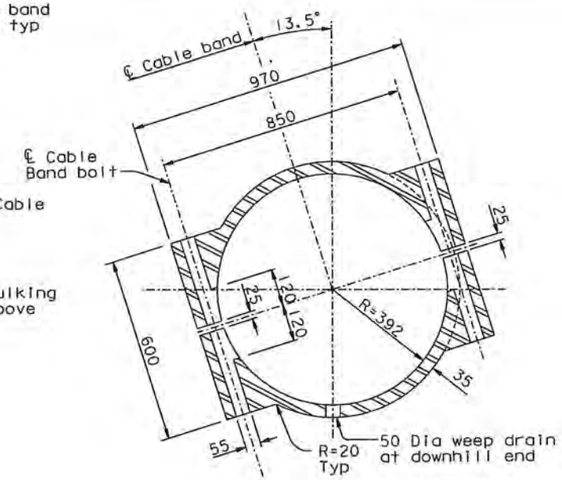

SECTION A-A
1:10

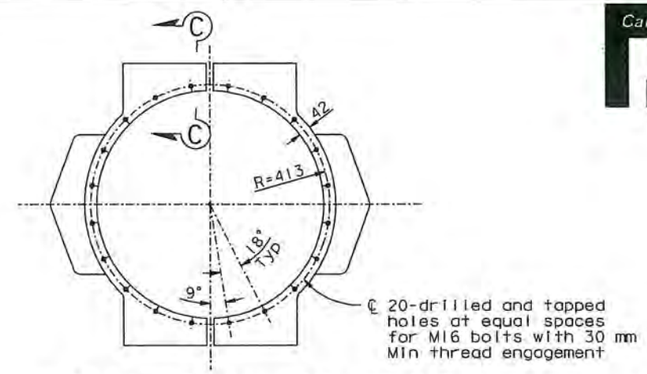

VIEW D-D FOR B11, B13 AND B15
1:10

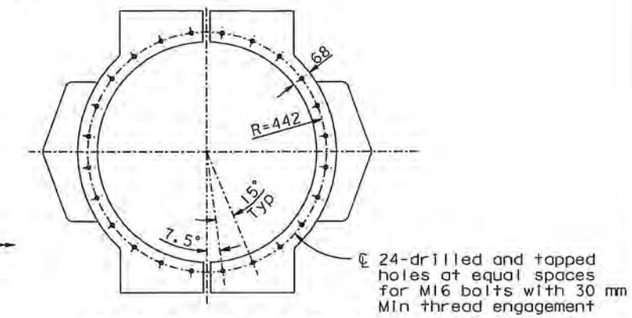

VIEW D-D FOR B16 ONLY
1:10

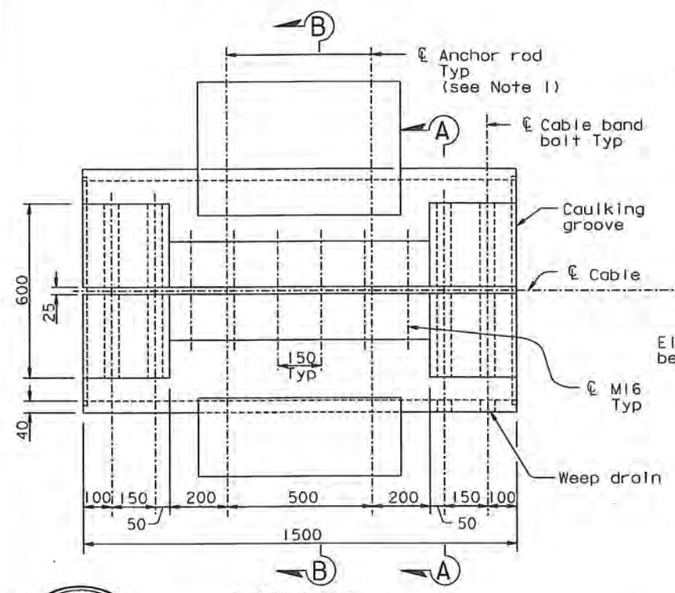

SIDE VIEW
(View perpendicular to the Cable Plane)

BAND TYPE B14
1:10

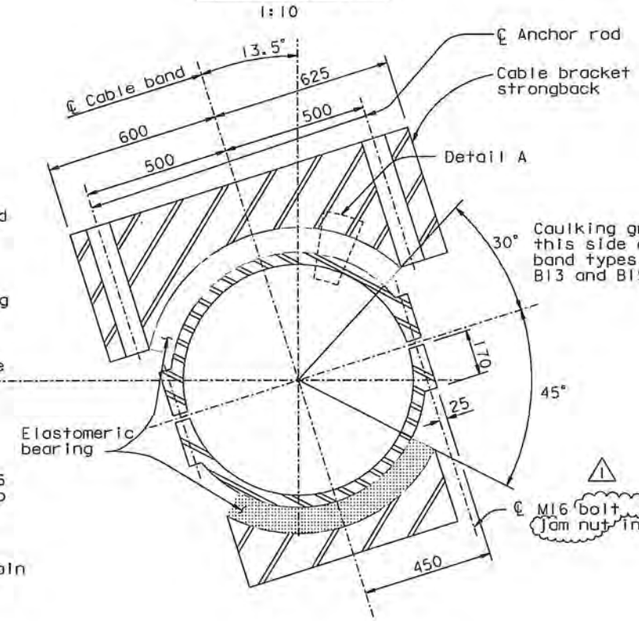

SECTION B-B

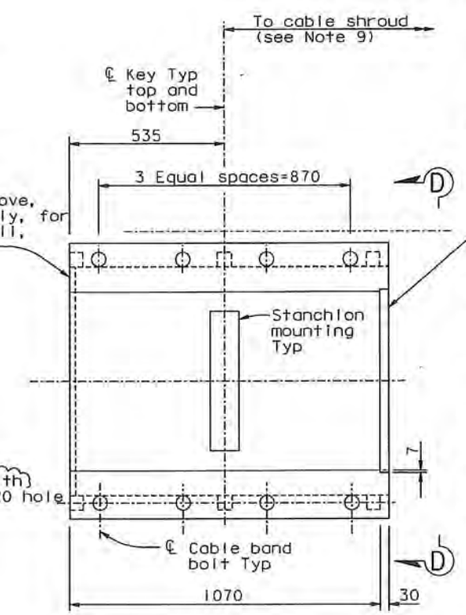

ELEVATION VIEW

BAND TYPE B15, B16 SIMILAR
1:10

NOTES:

1. For anchor rod details, see "Cable Bracket Details No. 1" sheet.
2. For Detail A and Section C-C, see "Cable Band Details No. 5" sheet.
3. For typical details not shown, see "Cable Band Details No. 3" sheet.
4. For caulking groove details, see "Cable Band Details No. 5" sheet.
5. For machined surfaces of cable bands, see "Cable Band Details No. 3" sheet.
6. Surfaces in contact with elastomeric bearings shall be geometrically true within ±1 mm. Surface roughness shall be finished to ANSI 1000.
7. Bolt bearing surface roughness shall be finished to ANSI 500.
8. Extension for Cable Shroud shall be part of cable band casting. For B16 only, both ends shall have Cable Shroud extensions.
9. For Cable Shrouds, see "West Cable Shroud Details", "Tower Cable Shroud Details" and "East Cable Shroud Details" sheets.

REGISTERED PROFESSIONAL ENGINEER Marwan N. Nader No. C 054426 Exp. 12/31/11 CIVIL STATE OF CALIFORNIA

FOR REVISIONS ONLY

CONTRACT CHANGE ORDER NO. 37S01
SHEET 10 OF 11

REQUESTS FOR INFORMATION NOT ADDRESSED IN THIS CCO REMAIN IN FORCE

ALL DIMENSIONS ARE IN MILLIMETERS UNLESS OTHERWISE SHOWN

R. Vallizadeh/V. Toan/Y. L./W. L./F. C.
DESIGN OVERSIGHT
SIGN OFF DATE 02/18/11

MARK	DATE	DESCRIPTIONS	BY	CH'D	CCO#
1	02/18/11	MISCELLANEOUS CABLE SYSTEM DETAILS	GB	MN	37S1

REVISIONS

DESIGN	BY G. Baker	CHECKED T. McMeans	
DETAILS	BY S. Camo	CHECKED P. Ritchie	
QUANTITIES	BY C. Mauch	CHECKED C. Mibelli	

PREPARED FOR THE STATE OF CALIFORNIA DEPARTMENT OF TRANSPORTATION

R. Manzanarez
PROJECT ENGINEER

BRIDGE NO. 34-0006L/R
KILOMETER POST 13.2/13.9

SAN FRANCISCO OAKLAND BAY BRIDGE
EAST SPAN SEISMIC SAFETY PROJECT
SELF-ANCHORED SUSPENSION BRIDGE
(SUPERSTRUCTURE & TOWER)

CABLE BAND DETAILS NO. 4

Rev. Date: 5-18-98

ORIGINAL SCALE IN MILLIMETERS FOR REDUCED PLANS 0 10 20 30 40 50 60 70 80 90 100

CU 04
EA 0120F1

DISREGARD PRINTS BEARING EARLIER REVISION DATES

REVISION DATES (PRELIMINARY STAGE ONLY) 01/25/99 03/25/99 09/28/99 03/27/01 09/28/02 01/28/02 12/19/02

SHEET 344R1 OF

FILE => I:\bb\04-0120F1\sas\contract plans and cco\cco\cco#37s1\1-update 02-18-11\dgn\agcbd04.dgn

USERNAME => DWinrow DATE PLOTTED => 18 FEB 2011 TIME PLOTTED => 11:12:57

100 % PS&E

DIST.	COUNTY	ROUTE	KILOMETER POST TOTAL PROJECT	SHEET NO.	TOTAL SHEETS
04	SF	80	13.2/13.9	912R3	1204

Caltrans Metric

REGISTERED ENGINEER - CIVIL

12-6-04
PLANS APPROVAL DATE

REGISTERED PROFESSIONAL ENGINEER Tien Hung Ho No. C 43990 Exp. 06/30/11 CIVIL STATE OF CALIFORNIA

The State of California or its officers or agents shall not be responsible for the accuracy or completeness of electronic copies of this plan sheet.

T.Y. LIN / MOFFATT & NICHOL
825 BATTERY STREET
SAN FRANCISCO, CA 94111

Caltrans now has a web site! To get to the web site, go to: http://www.dot.ca.gov

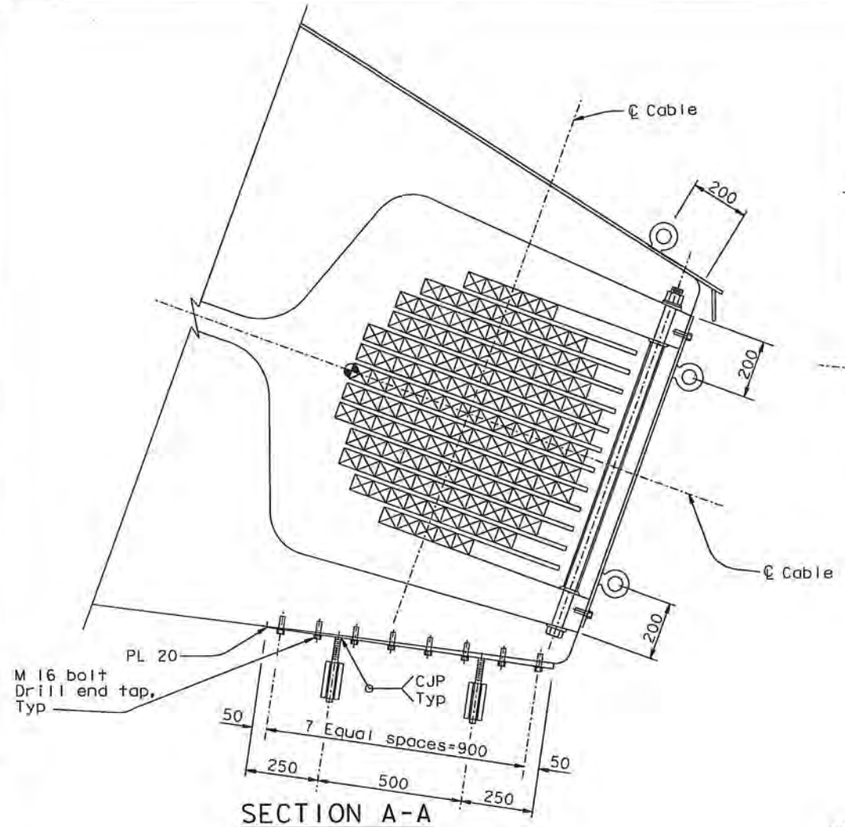

SECTION A-A
1:10

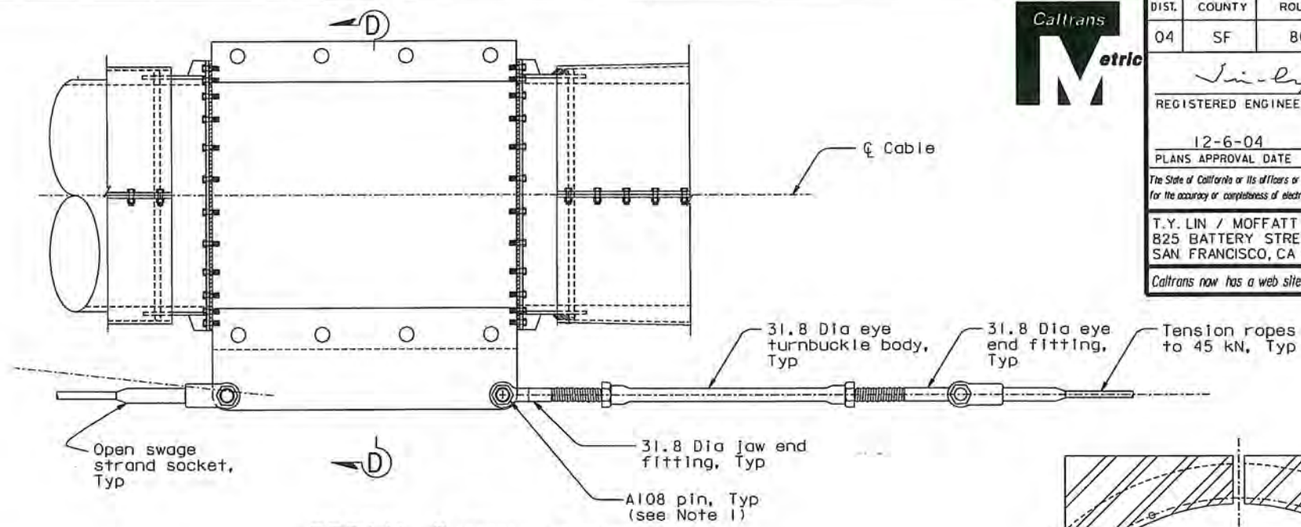

DETAIL D (Detail C similar)
1:10

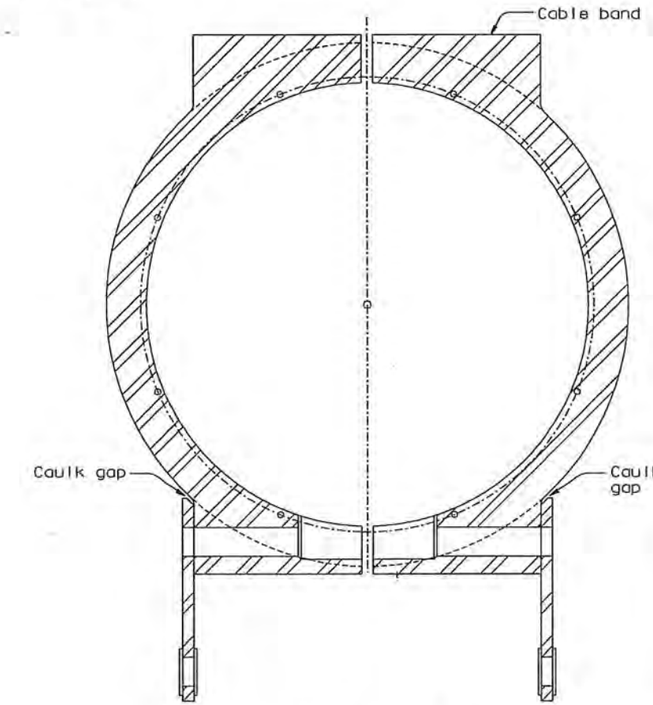

SECTION D-D
1:5

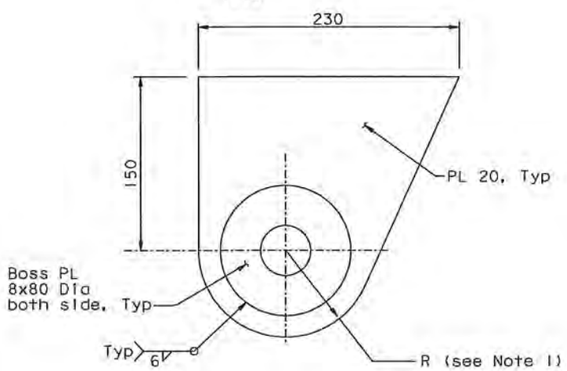

ANCHOR PLATE ASSEMBLY DETAIL
1:2.5

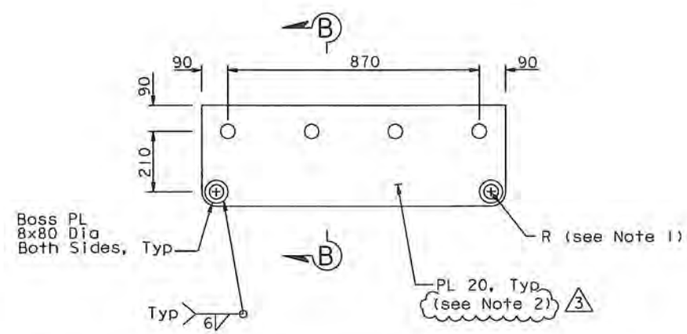

CABLE BAND PLATE ASSEMBLY DETAIL
1:10

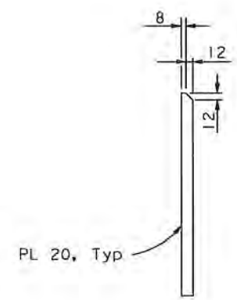

SECTION B-B
1:5

NOTES:

1. For pin details see "Cable Handrope Details No. 2" sheet.
2. At the Contractor's option, 36 mm assembly plates without boss plates and with longer cable band bolts may be used in lieu of the detail shown, subject to review and approval of the Engineer.

CONTRACT CHANGE ORDER NO. 37S01
SHEET 11 OF 11

REQUESTS FOR INFORMATION NOT ADDRESSED IN THIS CCO REMAIN IN FORCE

MARK	DATE	DESCRIPTIONS	BY	CH'D	CCO#
3	02/18/11	MISCELLANEOUS CABLE SYSTEM DETAILS	TH	GB	37S1
2	06/22/07	WELDED PADEYES	NV	TH	41
1	04/20/07	WEST ANCHORAGE ACCESS DETAILS	GB	TH	28

REVISIONS

R. Valizadeh/V. Toan/Y.L./W.L./F.C.
DESIGN OVERSIGHT
SIGN OFF DATE 02/18/11

	BY	CHECKED
DESIGN	T. Ho	N. Vo
DETAILS	J. Sun	N. Vo
QUANTITIES	T. Ho	N. Vo

PREPARED FOR THE STATE OF CALIFORNIA DEPARTMENT OF TRANSPORTATION

ALL DIMENSIONS ARE IN MILLIMETERS UNLESS OTHERWISE SHOWN

R. Manzanarez
PROJECT ENGINEER

BRIDGE NO. 34-0006L/R
KILOMETER POST 13.2/13.9

SAN FRANCISCO OAKLAND BAY BRIDGE
EAST SPAN SEISMIC SAFETY PROJECT
SELF-ANCHORED SUSPENSION BRIDGE
(SUPERSTRUCTURE & TOWER)

WEST ANCHORAGE ACCESS DETAILS NO. 3

Rev. Date: 5-18-98

ORIGINAL SCALE IN MILLIMETERS FOR REDUCED PLANS 0 10 20 30 40 50 60 70 80 90 100

CU 04
EA 0120F1

DISREGARD PRINTS BEARING EARLIER REVISION DATES

REVISION DATES (PRELIMINARY STAGE ONLY) 08/02/99 05/31/01 04/08/02 07/01/02 12/19/02 09/06/04

SHEET 495R3 OF

FILE => I:\bb\04-012001\sas\contract plans and cco\cco\cco#37s1\1-update 02-18-11\dgn\akacc02e.dgn

100 % PS&E

USERNAME => DWinrow DATE PLOTTED => 18 FEB 2011 TIME PLOTTED => 11:13:42

STATE OF CALIFORNIA - DEPARTMENT OF TRANSPORTATION

CONTRACT CHANGE ORDER

Change Requested by: Engineer

CCO: 37 **Suppl. No. 2** **Contract No. 04 – 0120F4** **Road** SF-80-13.2/13.9 **FED. AID LOC.:**

To: **AMERICAN BRIDGE/FLUOR ENTERPRISES INC A JOINT VENTURE**

You are directed to make the following changes from the plans and specifications or do the following described work not included in the plans and specifications for this contract. ***NOTE: This change order is not effective until approved by the Engineer.***

Description of work to be done, estimate of quantities and prices to be paid. (Segregate between additional work at contract price, agreed price and force account.) Unless otherwise stated, rates for rental of equipment cover only such time as equipment is actually used and no allowance will be made for idle time. This last percentage shown is the net accumulated increase or decrease from the original quantity in the Engineer's Estimate.

Adjustment of Compensation at Lump Sum Price:

Prime coat paint non-galvanized shrouds and stanchions and all appurtenant items, except for hand cable clamps, with Noxyde Plus, as specified in CCO 37 Supplement 0.

Provide Contractor's consultant Candraft-Tensor, LLC (CTLLC), full compensation for additional shop drawing structural detailing related to suspender and cable bracket modifications thru September 9, 2011.

For this work, the Contractor will receive a lump sum price of $106,359.00. This sum constitutes full and complete compensation for furnishing all labor, material, tools and incidentals including all markups by reason of this change.

Adjustment of Compensation at Lump Sum $106,359.00

Estimated Cost: Increase ☒ Decrease ☐ $106,359.00

By reason of this order the time of completion will be adjusted as follows: 0 Days

Submitted by

Signature	Resident Engineer	Date
Kannu Balan	Kannu Balan, Senior T.E.	3-22-12

Approval Recommended by

Signature	Supervising Transportation Engineer	Date
FOR CASEY	William Casey, Supervising T.E.	22 MAR 2012

Engineer Approval by

Signature	Supervising Transportation Engineer	Date
	William Casey, Supervising T.E.	4-4-12

We the undersigned contractor, have given careful consideration to the change proposed and agree, if this proposal is approved, that we will provide all equipment, furnish the materials, except as otherwise be noted above, and perform all services necessary for the work above specified, and will accept as full payment therefor the prices shown above.

NOTE: If you, the contractor, do not sign acceptance of this order, your attention is directed to the requirements of the specifications as to proceeding with the ordered work and filing a written protest within the time therein specified.

Contractor Acceptance by

Signature	(Print name and title)	Date
	BRIAN A. PETERSEN - PROJECT DIRECTOR	03APR12

STATE OF CALIFORNIA - DEPARTMENT OF TRANSPORTATION

CONTRACT CHANGE ORDER MEMORANDUM

DATE: 3/22/2012 Page 1 of 1

TO: Tony Anziano, Program Manager /	FILE: **E.A.** 04 - 0120F4
FROM: Kannu Balan, Senior TE	**CO-RTE-PM** SF-80-13.2/13.9
	FED. NO.
CCO#: **37** SUPPLEMENT#: **2** Category Code: **CHSA**	CONTINGENCY BALANCE (incl. this change) **$118,403,086.58**
COST: **$106,359.00** INCREASE ☑ DECREASE ☐	HEADQUARTERS APPROVAL REQUIRED? ☑ YES ☐ NO
SUPPLEMENTAL FUNDS PROVIDED: **$0.00**	IS THIS REQUEST IN ACCORDANCE WITH ENVIRONMENTAL DOCUMENTS? ☑ YES ☐ NO
CCO DESCRIPTION: Paint on Non-Galvanized Cable Items	**PROJECT DESCRIPTION:** CONSTRUCT SELF-ANCHORED SUSPENSION BRIDGE

Original Contract Time:	Time Adj. This Change:	Previously Approved CCO Time Adjustments:	Percentage Time Adjusted: (including this change)	Total # of Unreconciled Deferred Time CCO(s): (including this change)
2490 Day(s)	**0** Day(s)	**501** Day(s)	**20** %	**3**

THIS CHANGE ORDER PROVIDES FOR:

Prime coat painting non-galvanized shrouds and stanchions and all appurtenant items, except for hand cable clamps, with Noxyde Plus, as specified in CCO 37 Supplement 0. Providing Contractor's consultant Candraft-Tensor, LLC (CTLLC), full compensation for additional shop drawing structural detailing related to suspender and cable bracket modifications thru September 9, 2011.

CCO 37 S0 changed the prime coat paint specifications for non-galvanized cable items from Pegalink to Noxyde Plus. This supplement will include the cost for the prime coat paint change on shrouds and stanchions, since this cost was not included in CCO 37 S0. Department authorized changes required the Contractor's detailer to modify previously approved and/or prepare new shop drawings for the suspender and cable brackets and this cost was not included in CCO 37 S1.

The total cost of this change order is $106,359.00, which can be financed from the contingency fund. A detailed cost analysis is on file. The cumulative total of CCO 37 S0, S1, and S2 is $701,147.00.

No time adjustment is warranted as this change order does not affect the controlling operation.

This change order has concurrence from William Casey (Supervising TE), Ken Terpstra (Project Manager), Rich Foley (HQ Oversight), Wenyi Long (Bridge Design), Lina Ellis (Maintenance), and Jing Chen (District Design).

CONCURRED BY:			
Construction Engineer:	William Casey, Sup TE	Date	2/2/12
Bridge Engineer:	CT Oversight, Wenyi Long, P.E.	Date	2/2/12
Project Engineer:	District Design, Jing Chen	Date	2/9/12
Project Manager:	Proj Manager, Ken Terpstra	Date	2/2/12
FHWA Rep.:		Date	
Environmental:		Date	
Other (specify):	HQ, Rich Foley	Date	2/2/12
Other (specify):	Struct. Maint, Lina Ellis	Date	2/2/12
District Prior Approval By:		Date	
HQ (Issue Approve) By:		Date	
Resident Engineer's Signature:	Kannu Balan	Date	3-22-12

ESTIMATE OF COST

	THIS REQUEST	TOTAL TO DATE
ITEMS	$0.00	$3,170.00
FORCE ACCOUNT	$0.00	$0.00
AGREED PRICE	$0.00	$0.00
ADJUSTMENT	$106,359.00	$697,977.00
TOTAL	$106,359.00	$701,147.00

FEDERAL PARTICIPATION

☐ PARTICIPATING ☐ PARTICIPATING IN PART ☑ NONE
☐ NON-PARTICIPATING (MAINTENANCE) ☐ NON-PARTICIPATING

FEDERAL SEGREGATION (if more than one Funding Source or P.I.P. type)
☐ CCO FUNDED PER CONTRACT ☐ CCO FUNDED AS FOLLOWS

FEDERAL FUNDING SOURCE	PERCENT

ADA Notice: For individuals with sensory disabilities, this document is available in alternate formats. For information call: (916) 654-6410 or TDD (916) 654-3880 or write Records and Forms Management, 1120 N Street, MS-89, Sacramento, CA 95814.

STATE OF CALIFORNIA - DEPARTMENT OF TRANSPORTATION

CONTRACT CHANGE ORDER

Change Requested by: Engineer

CCO: 37 **Suppl. No. 3** **Contract No. 04 – 0120F4** **Road** SF-80-13.2/13.9 **FED. AID LOC.:**

To: **AMERICAN BRIDGE/FLUOR ENTERPRISES INC A JOINT VENTURE**

You are directed to make the following changes from the plans and specifications or do the following described work not included in the plans and specifications for this contract. ***NOTE: This change order is not effective until approved by the Engineer.***

Description of work to be done, estimate of quantities and prices to be paid. (Segregate between additional work at contract price, agreed price and force account.) Unless otherwise stated, rates for rental of equipment cover only such time as equipment is actually used and no allowance will be made for idle time. This last percentage shown is the net accumulated increase or decrease from the original quantity in the Engineer's Estimate.

Adjustment of Compensation at Lump Sum Price:

Revise Special Provisions Section 10-1.71 "CLEAN AND PAINT CABLE SYSTEM," subsection "MATERIALS," paragraphs 9 and 10 as shown on sheet 2 of this change order.

This change order resolves the costs associated with Contractor Request for Information (RFI) number 2892 with respect to changes listed above.

For this work, the Contractor will receive a lump sum price of $0.00. This sum constitutes full and complete compensation for furnishing all labor, material, tools and incidentals including all markups by reason of this change.

Adjustment of Compensation at Lump Sum.....$0.00

Estimated Cost: Increase ☒ Decrease ☐ $0.00

By reason of this order the time of completion will be adjusted as follows: 0 Days

Submitted by

Signature **Resident Engineer** Darryl Schram, Senior T.E. **Date** 8/10/12

Approval Recommended by

Signature **Supervising Transportation Engineer** William Casey, Supervising T.E. **Date** 8/16/12

Engineer Approval by

Signature **Supervising Transportation Engineer** William Casey, Supervising T.E. **Date** 8-22-12

We the undersigned contractor, have given careful consideration to the change proposed and agree, if this proposal is approved, that we will provide all equipment, furnish the materials, except as otherwise be noted above, and perform all services necessary for the work above specified, and will accept as full payment therefor the prices shown above.

NOTE: If you, the contractor, do not sign acceptance of this order, your attention is directed to the requirements of the specifications as to proceeding with the ordered work and filing a written protest within the time therein specified.

Contractor Acceptance by

Signature (Print name and title) Peter VanderWaart van Gulik, Deputy Project Director **Date** 8/21/2012

STATE OF CALIFORNIA - DEPARTMENT OF TRANSPORTATION

CONTRACT CHANGE ORDER MEMORANDUM

DATE: 8/14/2012

TO: Tony Anziano, Program Manager /	FILE: **E.A.** 04 - 0120F4
FROM: Darryl Schram, Senior TE	**CO-RTE-PM** SF-80-13.2/13.9
	FED. NO.
CCO#: **37** SUPPLEMENT#: **3** Category Code: **CHSA**	CONTINGENCY BALANCE (incl. this change) **$105,851,567.58**
COST: **$0.00** INCREASE ☐ DECREASE ☐	HEADQUARTERS APPROVAL REQUIRED? ☑ YES ☐ NO
SUPPLEMENTAL FUNDS PROVIDED: **$0.00**	IS THIS REQUEST IN ACCORDANCE WITH ENVIRONMENTAL DOCUMENTS? ☑ YES ☐ NO
CCO DESCRIPTION: Cable System Paint Spec Change	**PROJECT DESCRIPTION:** CONSTRUCT SELF-ANCHORED SUSPENSION BRIDGE

Original Contract Time:	Time Adj. This Change:	Previously Approved CCO Time Adjustments:	Percentage Time Adjusted: (including this change)	Total # of Unreconciled Deferred Time CCO(s): (including this change)
2490 Day(s)	**0** Day(s)	**501** Day(s)	**20** %	**3**

THIS CHANGE ORDER PROVIDES FOR:

Revising Special Provisions Section 10-1.71 "CLEAN AND PAINT CABLE SYSTEM," subsection "MATERIALS."

The Special Provisions require the Noxyde Plus cable paint system to be manufactured by Martin Mathys S.A. The Mathys primer is specified to contain 45.4% volume of solids and the Mathys intermediate coat is specified to contain 67% weight of solids and 57% volume of solids. However Mathys manufactures the Pegalink primer with 36% volume of solids and the Noxyde Plus intermediate coat with 62% weight and 55% volume of solids. This change order revises the Special Provisions to eliminate the conflict between primer and intermediate coat specified and the material being supplied by the specified supplier.

This change order resolves the costs associated with Contractor Request for Information (RFI) number 2892 with respect to changes listed above.

The total cost of this change order is $0.00, which can be financed from the contingency fund. A detailed cost analysis is on file. The cumulative total of CCO 37 S0, S1, S2, and S3 is $701,147.00.

No time adjustment is warranted as this change order does not affect the controlling operation.

This change order has concurrence from William Casey (Supervising TE), Ken Terpstra (Project Manager), Rich Foley (HQ Oversight), Wenyi Long (Bridge Design), Lina Ellis (Maintenance), and Jing Chen (District Design).

CONCURRED BY:

Construction Engineer:	William Casey, Sup TE	Date	7/13/12
Bridge Engineer:	CT Oversight, Wenyi Long, P.E.	Date	7/17/12
Project Engineer:	District Design, Jing Chen	Date	7/16/12
Project Manager:	Proj Manager, Ken Terpstra	Date	7/18/12
FHWA Rep.:		Date	
Environmental:		Date	
Other (specify):	HQ, Rich Foley	Date	7/18/12
Other (specify):	Struct. Maint, Lina Ellis	Date	7/13/12
District Prior Approval By:	HQ, Sey Hossnieh	Date	8/2/12
HQ (Issue Approve) By:		Date	
Resident Engineer's Signature:		Date	8/16/12

ESTIMATE OF COST

	THIS REQUEST	TOTAL TO DATE
ITEMS	$0.00	$3,170.00
FORCE ACCOUNT	$0.00	$0.00
AGREED PRICE	$0.00	$0.00
ADJUSTMENT	$0.00	$697,977.00
TOTAL	$0.00	$701,147.00

FEDERAL PARTICIPATION

☐ PARTICIPATING ☐ PARTICIPATING IN PART ☑ NONE
☐ NON-PARTICIPATING (MAINTENANCE) ☐ NON-PARTICIPATING

FEDERAL SEGREGATION (if more than one Funding Source or P.I.P. type)
☐ CCO FUNDED PER CONTRACT ☐ CCO FUNDED AS FOLLOWS

FEDERAL FUNDING SOURCE	PERCENT

ADA Notice: For individuals with sensory disabilities, this document is available in alternate formats. For information call: (916) 654-6410 or TDD (916) 654-3880 or write Records and Forms Management, 1120 N Street, MS-89, Sacramento, CA 95814.

STATE OF CALIFORNIA - DEPARTMENT OF TRANSPORTATION

CONTRACT CHANGE ORDER

Change Requested by: Engineer

CCO: 37 **Suppl. No. 4** **Contract No. 04 – 0120F4** **Road** SF-80-13.2/13.9 **FED. AID LOC.:**

To: **AMERICAN BRIDGE/FLUOR ENTERPRISES INC A JOINT VENTURE**

You are directed to make the following changes from the plans and specifications or do the following described work not included in the plans and specifications for this contract. ***NOTE: This change order is not effective until approved by the Engineer.***

Description of work to be done, estimate of quantities and prices to be paid. (Segregate between additional work at contract price, agreed price and force account.) Unless otherwise stated, rates for rental of equipment cover only such time as equipment is actually used and no allowance will be made for idle time. This last percentage shown is the net accumulated increase or decrease from the original quantity in the Engineer's Estimate.

Adjustment of Compensation at Lump Sum Price:

Revise gradation of the polyolefin beads applied to the shrouds, top flange of the cable bands, and top of the main cable.

Special Provisions Section 10-1.71 "CLEAN AND PAINT CABLE SYSTEM," subsection "MATERIALS" paragraph 11 and subsection "PAINTING" paragraph 13 are revised as shown on sheet 2 of this change order.

This change order resolves the costs associated with Contractor Request for Information (RFI) number 3195 with respect to changes listed above.

For this work, the Contractor will receive a lump sum price of $0.00. This sum constitutes full and complete compensation for furnishing all labor, material, tools and incidentals including all markups by reason of this change.

Adjustment of Compensation at Lump Sum..... $0.00

Estimated Cost: Increase ☒ Decrease ☐ $0.00

By reason of this order the time of completion will be adjusted as follows: 0 Days

Submitted by

Signature **Resident Engineer** Darryl Schram, Senior T.E. **Date** 3/4/13

Approval Recommended by

Signature **Supervising Transportation Engineer** William Casey, Supervising T.E. **Date** 3-4-13

Engineer Approval by

Signature **Supervising Transportation Engineer** William Casey, Supervising T.E. **Date** 3-6-13

We the undersigned contractor, have given careful consideration to the change proposed and agree, if this proposal is approved, that we will provide all equipment, furnish the materials, except as otherwise be noted above, and perform all services necessary for the work above specified, and will accept as full payment therefor the prices shown above.

NOTE: If you, the contractor, do not sign acceptance of this order, your attention is directed to the requirements of the specifications as to proceeding with the ordered work and filing a written protest within the time therein specified.

Contractor Acceptance by

Signature (Print name and title) BRIAN A. PETERSEN ~ PROJECT DIRECTOR **Date** 06MAR13

STATE OF CALIFORNIA - DEPARTMENT OF TRANSPORTATION

CONTRACT CHANGE ORDER MEMORANDUM

DATE: 3/4/2013 Page 1 of 1

TO: Tony Anziano, Program Manager /	FILE: **E.A.** 04 - 0120F4
FROM: Darryl Schram, Senior TE	**CO-RTE-PM** SF-80-13.2/13.9
	FED. NO.
CCO#: **37** SUPPLEMENT#: **4** Category Code: **CHSA**	CONTINGENCY BALANCE (incl. this change) **$92,007,045.99**
COST: **$0.00** INCREASE ☐ DECREASE ☐	HEADQUARTERS APPROVAL REQUIRED? ☑ YES ☐ NO
SUPPLEMENTAL FUNDS PROVIDED: **$0.00**	IS THIS REQUEST IN ACCORDANCE WITH ENVIRONMENTAL DOCUMENTS? ☑ YES ☐ NO
CCO DESCRIPTION: Cable System Nonskid Spec Change	**PROJECT DESCRIPTION:** CONSTRUCT SELF-ANCHORED SUSPENSION BRIDGE

Original Contract Time:	Time Adj. This Change:	Previously Approved CCO Time Adjustments:	Percentage Time Adjusted: (including this change)	Total # of Unreconciled Deferred Time CCO(s): (including this change)
2490 Day(s)	**0** Day(s)	**501** Day(s)	**20** %	**3**

THIS CHANGE ORDER PROVIDES FOR:

Revising gradation of the polyolefin beads applied to the shrouds, top flange of the cable bands, and top of the main cable. Revising Special Provisions Section 10-1.71 "Clean and Paint Cable System."

Contract Change Order (CCO) 300 "Polyolefin Bead Nonskid" directed the use of polyolefin beads on nonskid surfaces of the Tower, crossbeams, counterweights, fender boarding ladder, and behind the barrier rail, and also changed the gradation of the polyolefin beads but did not revise cable system Special Provisions Section 10-1.71. The contractor interpreted the modified polyolefin bead gradation to apply to the entire bridge and purchased material for the nonskid surfaces of the cable. The modified polyolefin bead graduation meets slip resistance requirements and provides the desired aesthetic appearance. CCOs 37 S0 through S3 revised painting of the cable system to improve corrosion protection and to eliminate conflicts between the specified primer and intermediate coat. This change order will apply larger graduated polyolefin beads for aesthetic uniformity and consistency with CCO 300 to the shrouds, the top flange of the cable bands, and the top of the main cable.

This change order resolves the costs associated with Contractor Request for Information (RFI) number 3195 with respect to changes listed above.

There is no cost to the Department for this change order. The cumulative total of CCO 37 S0, S1, S2, S3, and S4 is $701,147.00. A detailed cost analysis is on file.

No time adjustment is warranted as this change order does not affect the controlling operation.

This change order has concurrence from William Casey (Supervising TE), Rich Foley (HQ Oversight), Wenyi Long (Bridge Design), Jing Chen (District Design), and Lina Ellis (Maintenance).

CONCURRED BY:			
Construction Engineer:	William Casey, Sup TE	Date	2/26/13
Bridge Engineer:	CT Oversight, Wenyi Long, P.E.	Date	2/26/13
Project Engineer:	District Design, Jing Chen	Date	2/26/13
Project Manager:		Date	
FHWA Rep.:		Date	
Environmental:		Date	
Other (specify):	HQ, Rich Foley	Date	2/26/13
Other (specify):	Struct. Maint, Lina Ellis	Date	2/28/13
District Prior Approval By:		Date	
HQ (Issue Approve) By:		Date	
Resident Engineer's Signature:	DS	Date	3/4/13

ESTIMATE OF COST

	THIS REQUEST	TOTAL TO DATE
ITEMS	$0.00	$3,170.00
FORCE ACCOUNT	$0.00	$0.00
AGREED PRICE	$0.00	$0.00
ADJUSTMENT	$0.00	$697,977.00
TOTAL	$0.00	$701,147.00

FEDERAL PARTICIPATION

☐ PARTICIPATING ☐ PARTICIPATING IN PART ☑ NONE
☐ NON-PARTICIPATING (MAINTENANCE) ☐ NON-PARTICIPATING

FEDERAL SEGREGATION (if more than one Funding Source or P.I.P. type)
☐ CCO FUNDED PER CONTRACT ☐ CCO FUNDED AS FOLLOWS

FEDERAL FUNDING SOURCE	PERCENT

ADA Notice: For individuals with sensory disabilities, this document is available in alternate formats. For information call: (916) 654-6410 or TDD (916) 654-3880 or write Records and Forms Management, 1120 N Street, MS-89, Sacramento, CA 95814.

History Copy

STATE OF CALIFORNIA - DEPARTMENT OF TRANSPORTATION

CONTRACT CHANGE ORDER MEMORANDUM

TO: Pete Siegenthaler, Prin. TE / Gary Pursell, P.E., Sup T.E.	FILE: E.A. 04 - 0120F4
FROM: Gary Pursell, P.E., Sup.T.E.	CO-RTE-PM SF-80-13.2/13.9
	FED. NO.
CCO#: 38 SUPPLEMENT#: 0 Category Code: CHPT	CONTINGENCY BALANCE (incl. this change) $142,438,199.29
COST: $236,137.00 INCREASE ☑ DECREASE ☐	HEADQUARTERS APPROVAL REQUIRED? ☑ YES ☐ NO
SUPPLEMENTAL FUNDS PROVIDED: $0.00	IS THIS REQUEST IN ACCORDANCE WITH ENVIRONMENTAL DOCUMENTS? ☑ YES ☐ NO
CCO DESCRIPTION: Crossbeam Kink	PROJECT DESCRIPTION: CONSTRUCT SELF-ANCHORED SUSPENSION BRIDGE

Original Contract Time:	Time Adj. This Change:	Previously Approved CCO Time Adjustments:	Percentage Time Adjusted: (including this change)	Total # of Unreconciled Deferred Time CCO(s): (including this change)
2490 Day(s)	0 Day(s)	30 Day(s)	1 %	0

THIS CHANGE ORDER PROVIDES FOR:

Reimbursing the Contractor for additional detailing costs associated with the three crossbeam located between Panel Points 14 and 28, as shown on Sheets 2 through 12 of this change order.

The two parallel Orthotropic Box Girders (OBG) of the Self-Anchored Suspension Bridge (SAS) of the San Francisco-Oakland Bay Bridge are connected along their length by 19 crossbeams. The crossbeams themselves are full depth orthotropic box beams that serve to tie the two OBG together as a structural unit. Details of the connections between the two OBG and the crossbeam provided in the contract plans depict them as parallel structures with co-planer OBG decks. However, due to differences in superelevation and profile grades between the two OBG, the crossbeams connecting the OBG's cannot be parallel. These crossbeams must be "kinked" and/or "twisted" in order for all components to connect at the proper grade and superelevation.

The detailer made necessary adjustments to the alignment of the OBG and crossbeams by locating a kink at the splices between the crossbeam and the OBG. This was a rational and reasonable assumption as evidenced by the fact that it was acceptable for the majority of the crossbeams. It was determined that for three crossbeams at the west end of the bridge, where the relative displacement of the bridge was greatest, the crossbeams were overstressed. In October 2006, the Contractor was directed to relocate the kink to the edge of the OBG deck on top and back to the nearest floorbeam stiffener on the bottom, producing an offset in the kink from top to bottom. It would not be reasonable to expect a bidder/contractor to anticipate this overstress or to arrive at the solution as directed by the Department. The west-end of the bridge was re-detailed, checked, and PE reviewed per this direction. Subsequently it was determined that this direction created other problems for the geometry of the bridge and complicated fabrication. In February 2007, the Department altered the design of the crossbeam. The kinks in the crossbeams were located at the stiffeners within the crossbeams closest to the splice, near the location originally proposed by the Contractor. The west end crossbeams and all related drawings were re-detailed again.

This change order compensates the Contractor for the cost of twice re-detailing, including the creation of a new set of drawings for each of the three affected crossbeams. Also included is the cost of checking all drawings and revisions and having them reviewed and stamped by a Professional Civil Engineer registered in the State of California as required in the contract special provisions. The Contractor has indicated that additional costs in fabrication may arise due to this change. If it is determined there are additional fabrication costs, this will be resolved in a supplement to this change order.

Payment for the additional detailing will be at Extra Work at Lump Sum for a cost of $236,137.00, which can be financed from the contingency fund.

No Adjustment of Contract Time is warranted, as this Change Order does not affect the controlling operation.

This change order shall be executed unilaterally due to the Contractor returning it unsigned. Refer to attached ABFJV letter dated 7/20/07. The Department disagrees with the Contractor's contention that they need to "reserve our rights to time". See attached Department letter dated 7/26/07 for reference.

ADA Notice: For individuals with sensory disabilities, this document is available in alternate formats. For information call: (916) 654-6410 or TDD (916) 654-3880 or write Records and Forms Management, 1120 N Street, MS-89, Sacramento, CA 95814.

CONCURRED BY:			
Construction Engineer:	Res. Eng., Gary Pursell, Sup. TE	Date	5/20/07
Bridge Engineer:	Struct Rep, Rick Morrow, Sup TE	Date	5/21/07
Project Engineer:	CT Oversight, Reza Valizadeh, P.E	Date	5/24/07
Project Manager:	Proj Manager, Ken Terpstra	Date	5/24/07
FHWA Rep.:		Date	
Environmental:	Design of Record, Marwan Nader,	Date	4/19/07
Other (specify):	HQ, Rob Kobal	Date	5/22/07
Other (specify):	PCE, Pete Siegenthaler, Prin TE	Date	5/22/07
District Prior Approval By:		Date	
HQ (Issue .Approve) By:	HQ, Ken Darby	Date	5/28/07
Resident Engineer's Signature:	Gary Pursell 8/1/07	Date	

ESTIMATE OF COST

	THIS REQUEST	TOTAL TO DATE
ITEMS	$0.00	$0.00
FORCE ACCOUNT	$0.00	$0.00
AGREED PRICE	$236,137.00	$236,137.00
ADJUSTMENT	$0.00	$0.00
TOTAL	$236,137.00	$236,137.00

FEDERAL PARTICIPATION

☐ PARTICIPATING ☐ PARTICIPATING IN PART ☑ NONE
☐ NON-PARTICIPATING (MAINTENANCE) ☐ NON-PARTICIPATING

FEDERAL SEGREGATION (If more than one Funding Source or P.I.P. type)
☑ CCO FUNDED PER CONTRACT ☐ CCO FUNDED AS FOLLOWS

FEDERAL FUNDING SOURCE	PERCENT

ADA Notice: For individuals with sensory disabilities, this document is available in alternate formats. For information call: (916) 654-6410 or TDD (916) 654-3880 or write Records and Forms Management, 1120 N Street, MS-89, Sacramento, CA 95814.

History Copy

STATE OF CALIFORNIA - DEPARTMENT OF TRANSPORTATION

CONTRACT CHANGE ORDER

Change Requested by: Engineer

CCO: 38	Suppl. No. 0	Contract No. 04 - 0120F4	Road SF-80-13.2/13.9	FED. AID LOC.:

To: **AMERICAN BRIDGE/FLUOR ENTERPRISES INC A JOINT VENT**

You are directed to make the following changes from the plans and specifications or do the following described work not included in the plans and specifications for this contract. ***NOTE: This change order is not effective until approved by the Engineer.***

Description of work to be done, estimate of quantities and prices to be paid. (Segregate between additional work at contract price, agreed price and force account.) Unless otherwise stated, rates for rental of equipment cover only such time as equipment is actually used and no allowance will be made for idle time. This last percentage shown is the net accumulated increase or decrease from the original quantity in the Engineer's Estimate.

Extra Work at Lump Sum:

Reimburse the Contractor for additional detailing costs associated with the three crossbeams located between Panel Points 14 and 28, as shown on Sheets 2 through 12 of this change order.

This change order resolves the additional detailing costs associated with Contractor Request For Information (RFI) Nos. 61, 64, 69, 69R2, 110, 111, 113, 200, 201, 240, 254, 255, 294, 382R1, 514, 595, and 610 with respect to changes to the above referenced crossbeams.

The following revised sheets detail all changes:

Revised Contract Plan Sheet Nos. 639R1, 642R1, 644R1, 655R1, 656R2, 658R1, 659R2, 660R1, 725R1, 726R1 and 956R1 (of 1204).

For this work, the Contractor will be paid the sum of $236,137.00. This sum constitutes full compensation, including all markups, for this change.

There is no adjustment of contract time for this change.

Estimated cost of Extra Work at Lump Sum $236,137.00

Estimated Cost: Increase ☑ Decrease ☐ $236,137.00

By reason of this order the time of completion will be adjusted as follows: 0 days

Submitted by

Signature	Resident Engineer Gary Pursell, P.E., Sup.T.E.	Date 5/29/07

Approval Recommended by

Signature	Supervising Bridge Engineer Richard Morrow, P.E., Sup. BE	Date 5/29/07

Engineer Approval by

Signature	Principal Bridge Enigneer Peter Siegenthaler, P.E., Prin. BE	Date 7/26/07

We the undersigned contractor, have given careful consideration to the change proposed and agree, if this proposal is approved, that we will provide all equipment, furnish the materials, except as may otherwise be noted above, and perform all services necessary for the work above specified, and will accept as full payment therefor the prices shown above.

NOTE: If you, the contractor, do not sign acceptance of this order, your attention is directed to the requirements of the specifications as to proceeding with the ordered work and filing a written protest within the time therein specified.

Contractor Acceptance by

Signature	(Print name and title)	Date

History Copy

STATE OF CALIFORNIA-BUSINESS, TRANSPORTATION AND HOUSING AGENCY ARNOLD SCHWARZENEGGER, Governor

DEPARTMENT OF TRANSPORTATION - District 4 Toll Bridge Program
333 Burma Rd.
Oakland, CA 94607
(510) 622-5660, (510) 286-0550 fax

Flex your power
Be energy efficient!

July 26, 2007

Contract No. 04-0120F4
04-SF-80-13.2 / 13.9
Self-Anchored Suspension Bridge
Letter No. 05.03.01-000408

Michael Flowers
Project Executive
American Bridge/Fluor Enterprises, a JV
375 Burma Road
Oakland, CA 94607

Dear Michael Flowers,

Approved CCO 38

Attached please find CCO 38 approved by the Engineer. CCO 38 was returned unsigned by ABF on July 20, 2007, with the caveat that ABF reserves its rights to time. The CCO is being issued with no adjustment to contract time.

If ABF has reason to believe CCO 38 has impacted the contract completion date, please provide, within 15-days, a statement in support of such impacts along with the required time impact analysis. Your attention is directed to Section 4-1.03A, "Procedure and Protest," of the Standard Specifications and the provisions for Time Impact Analysis in Section 10-1.13, "Progress Schedule (Critical Path Method)," of the Special Provisions.

Sincerely,

<<< ORIGINAL SIGNED >>>

GARY PURSELL
Resident Engineer

cc: Darryl Schram
file: 05.03.01

History Copy

STATE OF CALIFORNIA - DEPARTMENT OF TRANSPORTATION

CONTRACT CHANGE ORDER MEMORANDUM

TO: Pete Siegenthaler, Prin. TE / Gary Pursell, P.E., Sup T.E.	FILE: E.A. 04 - 0120F4
FROM: Gary Pursell, P.E., Sup.T.E.	CO-RTE-PM SF-80-13.2/13.9
	FED. NO.
CCO#: 38 SUPPLEMENT#: 0 Category Code: CHPT	CONTINGENCY BALANCE (incl. this change) $142,438,199.29
COST: $236,137.00 INCREASE ☑ DECREASE ☐	HEADQUARTERS APPROVAL REQUIRED? ☑ YES ☐ NO
SUPPLEMENTAL FUNDS PROVIDED: $0.00	IS THIS REQUEST IN ACCORDANCE WITH ENVIRONMENTAL DOCUMENTS? ☑ YES ☐ NO
CCO DESCRIPTION: Crossbeam Kink	PROJECT DESCRIPTION: CONSTRUCT SELF-ANCHORED SUSPENSION BRIDGE

Original Contract Time:	Time Adj. This Change:	Previously Approved CCO Time Adjustments:	Percentage Time Adjusted: (including this change)	Total # of Unreconciled Deferred Time CCO(s): (including this change)
2490 Day(s)	0 Day(s)	30 Day(s)	1 %	0

THIS CHANGE ORDER PROVIDES FOR:

Reimbursing the Contractor for additional detailing costs associated with the three crossbeam located between Panel Points 14 and 28, as shown on Sheets 2 through 12 of this change order.

The two parallel Orthotropic Box Girders (OBG) of the Self-Anchored Suspension Bridge (SAS) of the San Francisco-Oakland Bay Bridge are connected along their length by 19 crossbeams. The crossbeams themselves are full depth orthotropic box beams that serve to tie the two OBG together as a structural unit. Details of the connections between the two OBG and the crossbeam provided in the contract plans depict them as parallel structures with co-planer OBG decks. However, due to differences in superelevation and profile grades between the two OBG, the crossbeams connecting the OBG's cannot be parallel. These crossbeams must be "kinked" and/or "twisted" in order for all components to connect at the proper grade and superelevation.

The detailer made necessary adjustments to the alignment of the OBG and crossbeams by locating a kink at the splices between the crossbeam and the OBG. This was a rational and reasonable assumption as evidenced by the fact that it was acceptable for the majority of the crossbeams. It was determined that for three crossbeams at the west end of the bridge, where the relative displacement of the bridge was greatest, the crossbeams were overstressed. In October 2006, the Contractor was directed to relocate the kink to the edge of the OBG deck on top and back to the nearest floorbeam stiffener on the bottom, producing an offset in the kink from top to bottom. It would not be reasonable to expect a bidder/contractor to anticipate this overstress or to arrive at the solution as directed by the Department. The west-end of the bridge was re-detailed, checked, and PE reviewed per this direction. Subsequently it was determined that this direction created other problems for the geometry of the bridge and complicated fabrication. In February 2007, the Department altered the design of the crossbeam. The kinks in the crossbeams were located at the stiffeners within the crossbeams closest to the splice, near the location originally proposed by the Contractor. The west end crossbeams and all related drawings were re-detailed again.

This change order compensates the Contractor for the cost of twice re-detailing, including the creation of a new set of drawings for each of the three affected crossbeams. Also included is the cost of checking all drawings and revisions and having them reviewed and stamped by a Professional Civil Engineer registered in the State of California as required in the contract special provisions. The Contractor has indicated that additional costs in fabrication may arise due to this change. If it is determined there are additional fabrication costs, this will be resolved in a supplement to this change order.

Payment for the additional detailing will be at Extra Work at Lump Sum for a cost of $236,137.00, which can be financed from the contingency fund.

No Adjustment of Contract Time is warranted, as this Change Order does not affect the controlling operation.

This change order shall be executed unilaterally due to the Contractor returning it unsigned. Refer to attached ABFJV letter dated 7/20/07. The Department disagrees with the Contractor's contention that they need to "reserve our rights to time". See attached Department letter dated 7/26/07 for reference.

ADA Notice: For individuals with sensory disabilities, this document is available in alternate formats. For information call: (916) 654-6410 or TDD (916) 654-3880 or write Records and Forms Management, 1120 N Street, MS-89, Sacramento, CA 95814.

CONCURRED BY:			
Construction Engineer:	Res. Eng., Gary Pursell, Sup. TE	Date	5/20/07
Bridge Engineer:	Struct Rep, Rick Morrow, Sup TE	Date	5/21/07
Project Engineer:	CT Oversight, Reza Valizadeh, P.E	Date	5/24/07
Project Manager:	Proj Manager, Ken Terpstra	Date	5/24/07
FHWA Rep.:		Date	
Environmental:	Design of Record, Marwan Nader,	Date	4/19/07
Other (specify):	HQ, Rob Kobal	Date	5/22/07
Other (specify):	PCE, Pete Siegenthaler, Prin TE	Date	5/22/07
District Prior Approval By:		Date	
HQ (Issue .Approve) By:	HQ, Ken Darby	Date	5/28/07
Resident Engineer's Signature:	Gary Pursell 8/1/07	Date	

ESTIMATE OF COST

	THIS REQUEST	TOTAL TO DATE
ITEMS	$0.00	$0.00
FORCE ACCOUNT	$0.00	$0.00
AGREED PRICE	$236,137.00	$236,137.00
ADJUSTMENT	$0.00	$0.00
TOTAL	$236,137.00	$236,137.00

FEDERAL PARTICIPATION

☐ PARTICIPATING ☐ PARTICIPATING IN PART ☑ NONE
☐ NON-PARTICIPATING (MAINTENANCE) ☐ NON-PARTICIPATING

FEDERAL SEGREGATION (If more than one Funding Source or P.I.P. type)
☑ CCO FUNDED PER CONTRACT ☐ CCO FUNDED AS FOLLOWS

FEDERAL FUNDING SOURCE	PERCENT

ADA Notice: For individuals with sensory disabilities, this document is available in alternate formats. For information call: (916) 654-6410 or TDD (916) 654-3880 or write Records and Forms Management, 1120 N Street, MS-89, Sacramento, CA 95814.

STATE OF CALIFORNIA - DEPARTMENT OF TRANSPORTATION

CONTRACT CHANGE ORDER

Change Requested by: Engineer

CCO: 38 Suppl. No. 1 Contract No. 04 – 0120F4 Road SF-80-13.2/13.9 **FED. AID LOC.:**

To: **AMERICAN BRIDGE/FLUOR ENTERPRISES INC A JOINT VENTURE**

You are directed to make the following changes from the plans and specifications or do the following described work not included in the plans and specifications for this contract. ***NOTE: This change order is not effective until approved by the Engineer.***

Description of work to be done, estimate of quantities and prices to be paid. (Segregate between additional work at contract price, agreed price and force account.) Unless otherwise stated, rates for rental of equipment cover only such time as equipment is actually used and no allowance will be made for idle time. This last percentage shown is the net accumulated increase or decrease from the original quantity in the Engineer's Estimate.

Adjustment of Compensation at Lump Sum Price:

ITEM 1.

Perform fabrication alterations to crossbeams 1, 2 and 3 as shown in revised plan sheets 639R1, 642R1, 644R1, 655R1, 656R2, 658R1, 659R2, 660R1, 725R1, 726R1 and 956R1 included in Contract Change Order (CCO) 38 Supplement 0.

For this work, the Contractor will be paid the sum of $1,770,127.00. This sum constitutes full compensation, including all mark ups, for this work.

Adjustment of Compensation at Lump Sum Price.....$1,770,127.00

ITEM 2.

The items identified above in this change order have been paid as part of CCO 108 resolution. Therefore, the amount due under this change order will be adjusted by the amount paid under CCO 108 to prevent a double payment. Total amount paid under CCO 108, and to be credited to this change, is $1,770,127.00.

Adjustment of Compensation at Lump Sum Price.....<$1,770,127.00>

CHANGE ORDER COST AND TIME SUMMARY

(ITEM 1) Adjustment of Compensation for work pursuant to this change order	$1,770,127.00
(ITEM 2) Amount paid under CCO 108 for this change order	<$1,770,127.00>
Total net pay for this change order	$0.00

Contract time is addressed in CCO 108 for all work identified in this change order. Therefore, contract time will not be adjusted in this change order.

Estimated Cost: Increase ☐ Decrease ☐ $0.00

By reason of this order the time of completion will be adjusted as follows: 0 days

Submitted by

Signature **Resident Engineer** Brian Boal for Gary Pursell, Sup.T.E. **Date** 1 MARCH 2010

Approval Recommended by

Signature Gary Pursell **Supervising Transportation Engineer** Gary Pursell, Sup.T.E. **Date** 3/1/10

Engineer Approval by

Signature Peter E. Siegenthaler **Principal Transportation Engineer** Peter Siegenthaler, Prin.T.E. **Date** 3/11/10

We the undersigned contractor, have given careful consideration to the change proposed and agree, if this proposal is approved, that we will provide all equipment, furnish the materials, except as otherwise be noted above, and perform all services necessary for the work above specified, and will accept as full payment therefor the prices shown above.

NOTE: If you, the contractor, do not sign acceptance of this order, your attention is directed to the requirements of the specifications as to proceeding with the ordered work and filing a written protest within the time therein specified.

Contractor Acceptance by

Signature (Print name and title) Michael D. Flavers Project Director **Date** 3-5-10

STATE OF CALIFORNIA - DEPARTMENT OF TRANSPORTATION

CONTRACT CHANGE ORDER MEMORANDUM

DC-CEM-4903 (OLD HC-39 REV. 6/93) CT# 7541-3544-0

DATE: 3/16/2010

TO Pete Siegenthaler, Principal TE	FILE 04-0120F4 04-SF-80-13.2/13.9
FROM Gary Pursell, STE / Richard Morrow, SBE	
CCO NO. **38** / SUPPLEMENT NO. **1** / CATEGORY CODE **CHPT**	CONTINGENCY BALANCE (including this change) **$8,014,909.40**
$0.00 INCREASE ☐ DECREASE ☐	HEADQUARTERS APPROVAL REQUIRED? YES ☐ NO ☒
SUPPLEMENTAL FUNDS PROVIDED $	IS THIS REQUEST IN ACCORDANCE WITH ENVIRONMENTAL DOCUMENTS? YES ☒ NO ☐
CCO DESCRIPTION: Crossbeam Kink (Fabrication)	**PROJECT DESCRIPTION** CONSTRUCT SELF-ANCHORED SUSPENSION BRIDGE

Original Contract Time	Time Adj.: This Change	Previously Approved CCO Time Adjustments	Percentage Time Adjusted: (including this change)	Total # of Unreconciled Deferred Time CCO(s): (including this change)
2490 Day(s)	**0** Day(s)	**227** Day(s)	**9** %	**6**

THIS CHANGE ORDER PROVIDES FOR:

Performing fabrication alterations to crossbeams 1, 2, and 3 as detailed in previously approved Contract Change Order 38 Supplement 0 (CCO 38S0).

The plans require crossbeams 1, 2, and 3 to be "kinked" and/or "twisted" in order to connect at the proper grade and super elevation. Analysis revealed that crossbeams 1, 2, and 3 were overstressed as detailed by the Contractor. The Department directed the Contractor to relieve the overstressing by stiffening the connection and relocating the crossbeam kink locations. Contract Change Order 38 Supplement 0 resolves additional detailing and this change order (CCO 38S1) addresses and resolves the additional fabrication costs.

This work is not covered by any contract items. Therefore, payment for this work will be at Adjustment of Compensation at Lump Sum for the amount of $1,770,127.00. Since the cost, of $1,770,127.00 in this change, is included in Contract Change Order 108 Supplement 1 (CCO 108S1) Claim Settlement Report No. 1 resolution costs the net payment in this change order is zero.

A determination of the delay in completion of the contract due to work specified by this change order, has been made in CCO 108S1 and is part of the Claims Settlement Report (CSR) No. 1 for this project. Therefore, no adjustment of time is warranted by reason of this change order.

This change order received concurrence from Gary Pursell (Resident Engineer), Rick Morrow (Sup. Structure Rep), Peter Siegenthaler (Principal TE), Rich Foley (HQ Oversight), Ken Terpstra (Project Manager), Richard Land (Chief Engineer), Jon Tapping (HQ Coordinator), Tony Anziano (Toll Bridge Program Manager), Marwan Nader (Design of Record), Brian Maroney (Project Engineer), Wenyi Long (Design Oversight). Maintenance concurrence is not required for his change.

Claims Settlement Report (CSR) No. 1, for this project, revises the authority to "Issue and Approve" the changes listed in CCO 108S1 Appendices A & B. The authority to "Issue and Approve" the changes listed in Appendices A & B for the values of time and money contemplated therein has been delegated to the District for approval and approval of each of these change orders by the Headquarters CCO Desk will not be required. Since this change order is included in CCO 108S1 no Headquarters CCO Desk "Issue and Approve" is required, a copy of CCO 108S1 is attached for reference.

CONTRACT CHANGE ORDER MEMORANDUM

DC-CEM-4903 (OLD HC-39 REV. 6/93) CT# 7541-3544-0

DATE: 3/16/2010

CONCURRED BY:		
CONSTRUCTION ENGINEER Res. Eng. Gary Pursell, Sup. TE	DATE 6/30/08	
SR. BRIDGE ENGINEER Rick Morrow, Sup. BE	DATE 6/27/08	
FHWA REPRESENTATIVE	DATE	
PROJECT MANAGER Ken Terpstra, Prin. TE	DATE 11/5/08	
OTHER (SPECIFY) (Other Concurrences Listed Above)	DATE	
Peter Siegenthaler, Prin. TE, PCE	DATE 11/5/08	
DISTRICT PRIOR APPROVAL BY	DATE	
HQ (ISSUE & APPROVE) (TO PROCEED) BY Bob Molera (ISSUE & APPROVE)	DATE 12/31/09	
RESIDENT ENGINEER SIGNATURE Gary Pursell	DATE 3/16/10	

ESTIMATE OF COST

	THIS REQUEST	TOTAL TO DATE
ITEMS	$0.00	$0.00
FORCE ACCOUNT	$0.00	$0.00
AGREED PRICE	$0.00	$236,137.00
ADJUSTMENT	$0.00	$0.00
TOTAL	$0.00	$236,137.00

FEDERAL PARTICIPATION

☐ PARTICIPATING ☐ PARTICIPATING IN PART ☒ NONE
☐ NON-PARTICIPATING (MAINTENANCE) ☐ NON-PARTICIPATING

FEDERAL SEGREGATION (IF MORE THAN ONE FUNDING SOURCE OR P.I.P. TYPE)
☐ CCO FUNDED PER CONTRACT ☐ CCO FUNDED AS FOLLOWS

FEDERAL FUNDING SOURCE	PERCENT

STATE OF CALIFORNIA - DEPARTMENT OF TRANSPORTATION

CONTRACT CHANGE ORDER

Change Requested by: Engineer

CCO: 39	Suppl. No. 0	Contract No. 04 - 0120F4	Road SF-80-13.2/13.9	FED. AID LOC.:

To: **AMERICAN BRIDGE/FLUOR ENTERPRISES INC A JOINT VENT**

You are directed to make the following changes from the plans and specifications or do the following described work not included in the plans and specifications for this contract. ***NOTE: This change order is not effective until approved by the Engineer.***

Description of work to be done, estimate of quantities and prices to be paid. (Segregate between additional work at contract price, agreed price and force account.) Unless otherwise stated, rates for rental of equipment cover only such time as equipment is actually used and no allowance will be made for idle time. This last percentage shown is the net accumulated increase or decrease from the original quantity in the Engineer's Estimate.

Extra Work at Force Account:

Provide the Daily Diary Report (DDR) Module and supporting software as directed by the Engineer. The DDR Module shall be integrated into the document management software currently in use under Section 10-1.20, "DOCUMENT MANAGEMENT SYSTEM" of the contract Special Provisions.

Labor, equipment and material authorized by the Engineer, as necessary, will be paid in accordance with the provisions of Section 4-1.03D, "Extra Work" of the Standard Specifications and Section 5-1.24, "Force Account Payment" of the Special Provisions.

Estimated cost of Extra Work at Force Account $195,000.00

Estimated Cost: Increase ☑ Decrease ☐ $195,000.00

By reason of this order the time of completion will be adjusted as follows: 0 days

Submitted by		
Signature Gary Pursell	Resident Engineer Gary Pursell, P.E., Sup.T.E.	Date 5/31/07
Approval Recommended by		
Signature	Supervising Bridge Engineer Richard Morrow, P.E., Sup. BE	Date 5/31/07
Engineer Approval by		
Signature Gary Pursell	Supervising Transportation Engineer Gary Pursell, P.E., Sup. TE	Date 7/23/07

We the undersigned contractor, have given careful consideration to the change proposed and agree, if this proposal is approved, that we will provide all equipment, furnish the materials, except as may otherwise be noted above, and perform all services necessary for the work above specified, and will accept as full payment therefor the prices shown above.

NOTE: If you, the contractor, do not sign acceptance of this order, your attention is directed to the requirements of the specifications as to proceeding with the ordered work and filing a written protest within the time therein specified.

Contractor Acceptance by		
Signature Michael D. Flowers	(Print name and title) Michael D. Flowers Project Director	Date 7/20/07

STATE OF CALIFORNIA - DEPARTMENT OF TRANSPORTATION

CONTRACT CHANGE ORDER

Change Requested by: Engineer

CCO: 40	Suppl. No. 0	Contract No. 04 - 0120F4	Road SF-80-13.2/13.9	FED. AID LOC.:

To: **AMERICAN BRIDGE/FLUOR ENTERPRISES INC A JOINT VENT**

You are directed to make the following changes from the plans and specifications or do the following described work not included in the plans and specifications for this contract. ***NOTE: This change order is not effective until approved by the Engineer.***

Description of work to be done, estimate of quantities and prices to be paid. (Segregate between additional work at contract price, agreed price and force account.) Unless otherwise stated, rates for rental of equipment cover only such time as equipment is actually used and no allowance will be made for idle time. This last percentage shown is the net accumulated increase or decrease from the original quantity in the Engineer's Estimate.

Adjustment of Compensation at Lump Sum:

Reimburse the Contractor for additional costs associated with the Pier W2 cable tie-down as shown on Sheets 2 and 3 of this change order.

The following revised sheets detail all changes:

Revised Contract Plan Sheet Nos. 450R2 and 522R2 (of 1204).

This change order resolves Contractor Request For Information (RFI) Nos. 380, 380R1 and 600 with respect to changes to the above referenced sheets.

For this work the Contractor shall receive and accept the sum of $9,231.00. This sum constitutes full and complete compensation for furnishing all labor, material, tools and incidentals including all markups by reason of this Change.

There is no adjustment of contract time for this change.

Cost of Adjustment of Compensation at Lump Sum $9,231.00

Estimated Cost: Increase ☑ Decrease ☐ **$9,231.00**

By reason of this order the time of completion will be adjusted as follows: 0 days

Submitted by		
Signature Gilel Klebanov	Resident Engineer Gil Klebanov for Gary Pursell, P.E., Sup.T.E.	Date 1/14/2008
Approval Recommended by		
Signature RC / MW	Supervising Bridge Engineer Richard Morrow, P.E., Sup. BE	Date 1/22/08
Engineer Approval by		
Signature Gary Pursell	Supervising Transportation Engineer Gary Pursell, P.E., Sup. TE	Date 2/27/08

We the undersigned contractor, have given careful consideration to the change proposed and agree, if this proposal is approved, that we will provide all equipment, furnish the materials, except as may otherwise be noted above, and perform all services necessary for the work above specified, and will accept as full payment therefor the prices shown above.

NOTE: If you, the contractor, do not sign acceptance of this order, your attention is directed to the requirements of the specifications as to proceeding with the ordered work and filing a written protest within the time therein specified.

Contractor Acceptance by		
Signature Michael D. Flowers	(Print name and title) Michael D. Flowers Project Director	Date 2-14-08

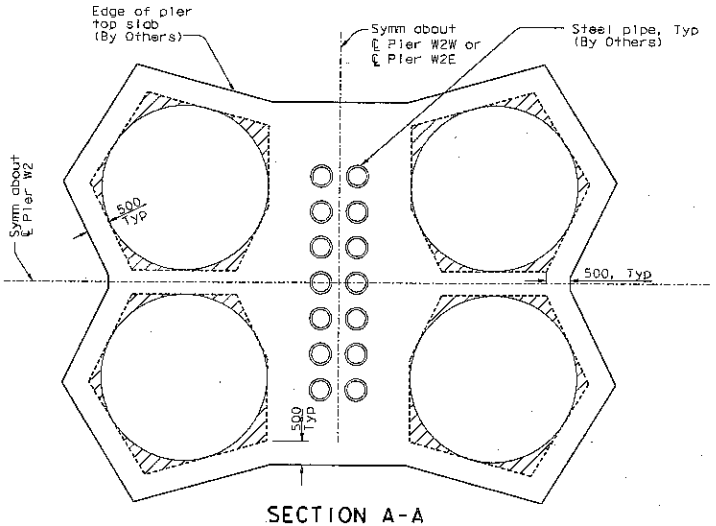

SECTION A-A
1:50

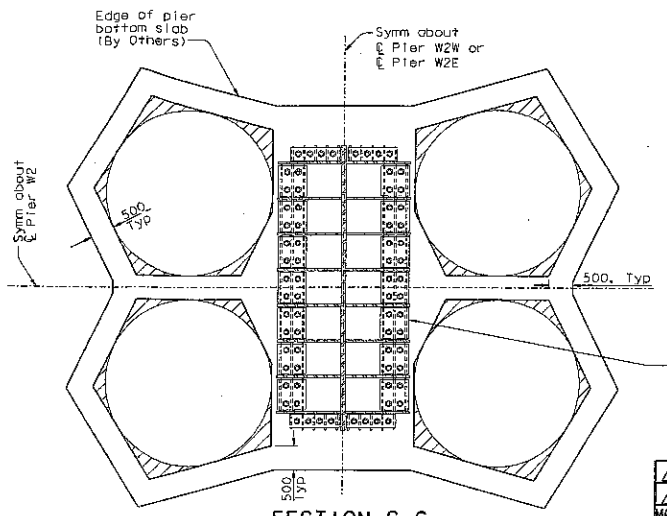

SECTION C-C
1:50

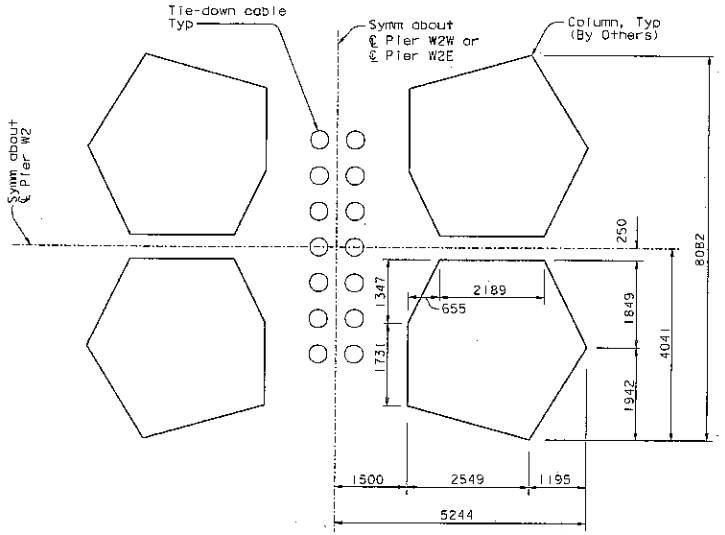

SECTION B-B
1:50

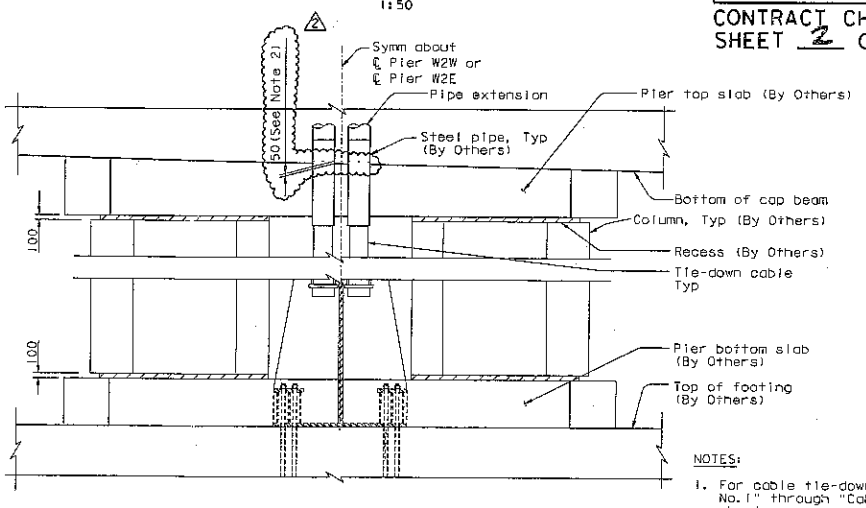

SECTION D-D
1:50

DIST.	COUNTY	ROUTE	KILOMETER POST TOTAL PROJECT	SHEET NO.	TOTAL SHEETS
04	SF	80	13.2/13.9	450R2	1204

REGISTERED ENGINEER - CIVIL

12-6-04
PLANS APPROVAL DATE

The State of California or its officers or agents shall not be responsible for the accuracy or completeness of electronic copies of this plan sheet.

REGISTERED PROFESSIONAL ENGINEER John Sun No. C 54648 Exp. 12/31/05 CIVIL STATE OF CALIFORNIA

T.Y. LIN / MOFFATT & NICHOL
825 BATTERY STREET
SAN FRANCISCO, CA 94111

Caltrans now has a web site! To get to the web site, go to: http://www.dot.ca.gov

LEGEND:

Indicates 100 recess

REGISTERED PROFESSIONAL ENGINEER Daniel P. Duxbury No. C 54677 Exp. 06/30/07 CIVIL STATE OF CALIFORNIA

FOR REVISIONS ONLY

MARK	DATE	DESCRIPTIONS	BY	CH'D	CCO#
2	04/02/07	CABLE TIE-DOWN	JD	AS	40
1	07/21/06	W2 CAP BEAM ISD	JD	NV	23

REVISIONS

CONTRACT CHANGE ORDER NO. 40
SHEET 2 OF 3

NOTES:

1. For cable tie-down, see "Cable Tie-Down Details No. 1" through "Cable Tie-Down Details No. 4" 1 sheets.
2. 2 The steel pipe shall be trimmed down 50 mm above the pier top slab.

ALL DIMENSIONS ARE IN MILLIMETERS UNLESS OTHERWISE SHOWN

R. Valizadeh/V. Toan/Y.L./W.L./F.C.
DESIGN OVERSIGHT
Reg. Valizadeh / Vong Toan / Y. Lin
SIGN OFF DATE 04/02/07
Rev. Date: 3-10-98

RECEIVED JAN 22 2008 ABF.

DESIGN	BY J. Sun	CHECKED J. Leventini	
DETAILS	BY J. Duxbury	CHECKED J. Leventini	
QUANTITIES	BY J. Duxbury	CHECKED S. Shi	

PREPARED FOR THE STATE OF CALIFORNIA DEPARTMENT OF TRANSPORTATION

R. Manzanarez
PROJECT ENGINEER

BRIDGE NO. 34-0006L/R
KILOMETER POST 13.2/13.9

SAN FRANCISCO OAKLAND BAY BRIDGE
EAST SPAN SEISMIC SAFETY PROJECT
SELF-ANCHORED SUSPENSION BRIDGE
(SUPERSTRUCTURE & TOWER)

PIER W2 DETAILS NO. 4

ORIGINAL SCALE IN MILLIMETERS FOR REDUCED PLANS 0 10 20 30 40 50 60 70 80 90 100

CU 04
EA 0120F1

DISREGARD PRINTS BEARING EARLIER REVISION DATES

REVISION DATES (PRELIMINARY STAGE ONLY) 01/27/99 05/25/99 04/26/99 05/31/01 04/30/02 07/01/02 12/18/02

SHEET 33R2 OF

FILE => I:\bb\04-0120F1\sas\contract plans and cco\cco\in progress\cco#40\coepfr02.dgn

100 % PS&E

USERNAME => dwinrow DATE PLOTTED => 05 APR 2007 TIME PLOTTED => 13:41:59

DIST.	COUNTY	ROUTE	KILOMETER POST TOTAL PROJECT	SHEET NO.	TOTAL SHEETS
04	SF	80	13.2/13.9	522R2	1204

REGISTERED ENGINEER - CIVIL

12-6-04
PLANS APPROVAL DATE

REGISTERED PROFESSIONAL ENGINEER John Sun No. C 54648 Exp. 12/31/05 CIVIL STATE OF CALIFORNIA

The State of California or its officers or agents shall not be responsible for the accuracy or completeness of electronic copies of this plan sheet.

T.Y. LIN / MOFFATT & NICHOL
825 BATTERY STREET
SAN FRANCISCO, CA 94111

Caltrans now has a web site! To get to the web site, go to: http://www.dot.ca.gov

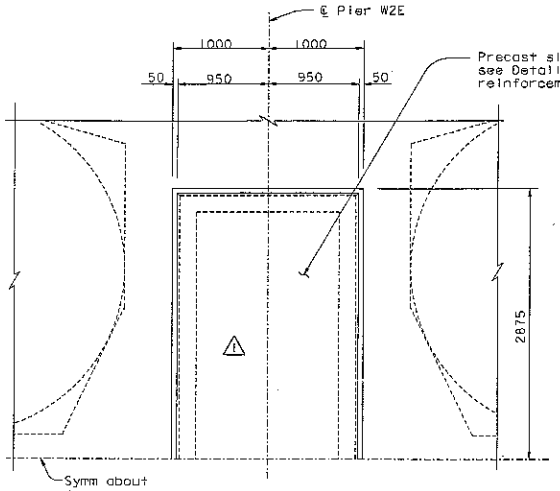

SECTION E-E
1:25

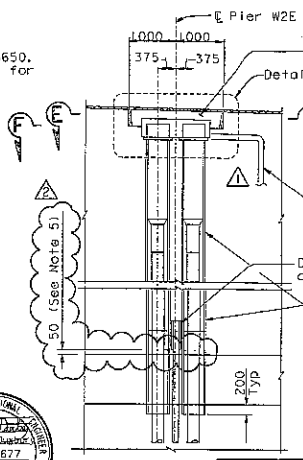

DETAIL A
1:50

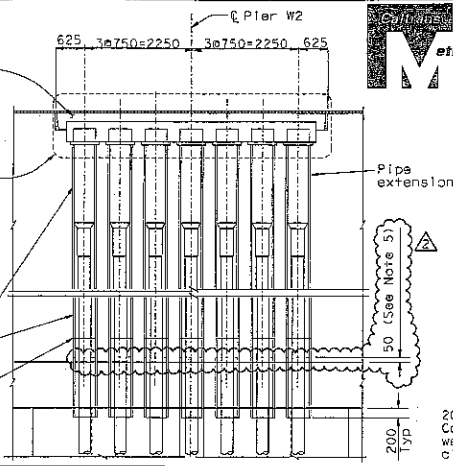

DETAIL B
1:50

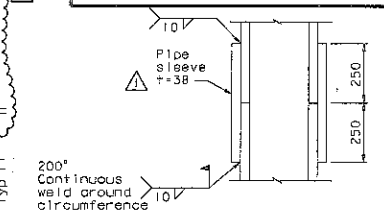

ALTERNATE CONNECTION FOR STEEL PIPE
1:10

FOR REVISIONS ONLY

MARK	DATE	DESCRIPTIONS	BY	CH'D	CCO#
2	04/02/07	CABLE TIE-DOWN	JD	AS	40
1	07/21/06	W2 CAP BEAM ISD	JD	NV	23

REVISIONS

CONTRACT CHANGE ORDER NO. 40
SHEET 3 OF 3

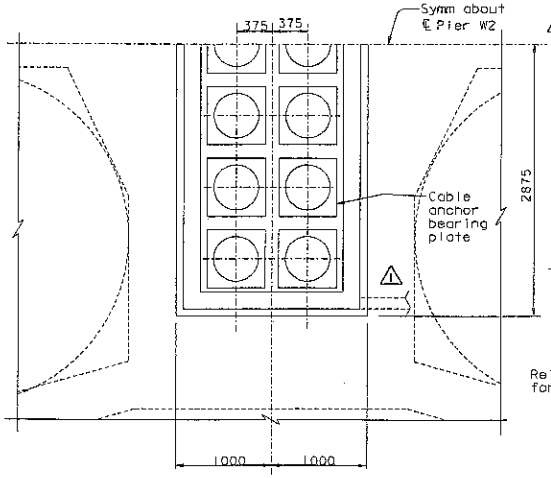

SECTION F-F
1:25

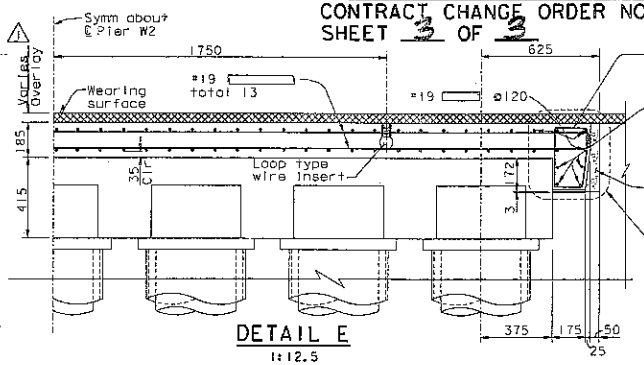

DETAIL E
1:12.5

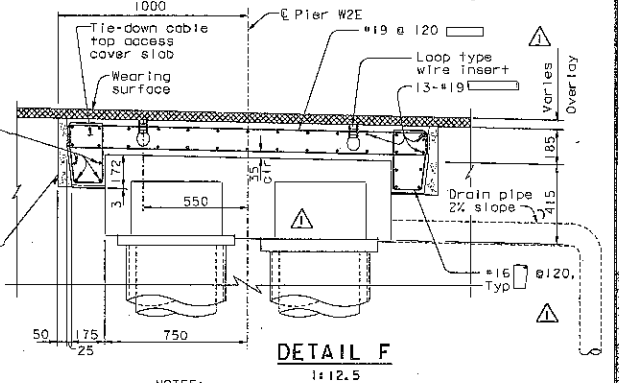

DETAIL F
1:12.5

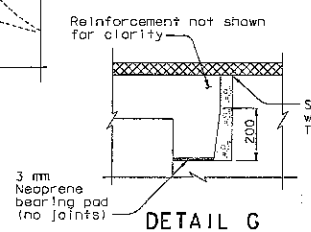

DETAIL G
1:10

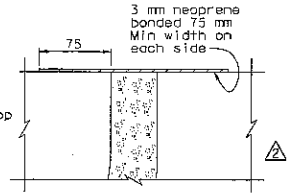

STRIP WATERSTOP DETAIL
1:2.5

4. Drain pipe shall be spliced to the drain pipe provided by the Self-Anchored Suspension Bridge (W2) Contract (by Others). Drain shall be placed at the low point of the tie-down access. The Contractor may adjust location of the drain inlet to accommodate reinforcement and cap beam postensioning.

5. The steel pipe shall be trimmed down 50 mm above the pier top slab.

NOTES:

1. For additional details, see "Cable Tie-down Details No. 1" sheet.
2. Concrete for the precast slab should be f'c=60 MPa at 28 days.
3. Steel pipe shall be ASTM A709 M Grade 345 unless specified otherwise. The contractor may substitute the Steel Pipe OD=508 with a PT supplier recommended pipe to suit his erection means and methods, subject to review and approval of the Engineer.

ALL DIMENSIONS ARE IN MILLIMETERS UNLESS OTHERWISE SHOWN

R. Vallizadeh/V. Toon/Y. L./W. L./F. C.
DESIGN OVERSIGHT
Roya Vallizadeh / Vang Toon / Y. Lin
SIGN OFF DATE 04/08/07

RECEIVED JAN 22 2008 ABF

DESIGN	BY J. Sun	CHECKED J. Stroski
DETAILS	BY S. Shi	CHECKED J. Stroski
QUANTITIES	BY J. Duxbury	CHECKED S. Shi

PREPARED FOR THE STATE OF CALIFORNIA DEPARTMENT OF TRANSPORTATION

R. Manzanarez
PROJECT ENGINEER

BRIDGE NO. 34-0006L/R
KILOMETER POST 13.2/13.9

SAN FRANCISCO OAKLAND BAY BRIDGE
EAST SPAN SEISMIC SAFETY PROJECT
SELF-ANCHORED SUSPENSION BRIDGE
(SUPERSTRUCTURE & TOWER)

CABLE TIE-DOWN DETAILS NO. 3

Rev. Date: 5-15-98

ORIGINAL SCALE IN MILLIMETERS FOR REDUCED PLANS 0 10 20 30 40 50 60 70 80 90 100

CU 04
EA 012DF1

DISREGARD PRINTS BEARING EARLIER REVISION DATES

REVISION DATES (PRELIMINARY STAGE ONLY)

SHEET 105R2 OF

FILE => T:\DS\04-012DF1\sds\contract plans and ccs\ccs\in progress\cco#40\coeftdb3.dgn

100 % PS&E

DESIGNER => CHRITCH DATE PLOTTED => 05-MAR-2007 TIME PLOTTED => 14:17:00

CONTRACT CHANGE ORDER

Change Requested by: Engineer

CCO: 41 **Suppl. No. 0** **Contract No. 04 – 0120F4** **Road** SF-80-13.2/13.9 **FED. AID LOC.:**

To: **AMERICAN BRIDGE/FLUOR ENTERPRISES INC A JOINT VENTURE**

You are directed to make the following changes from the plans and specifications or do the following described work not included in the plans and specifications for this contract. ***NOTE: This change order is not effective until approved by the Engineer.***

Description of work to be done, estimate of quantities and prices to be paid. (Segregate between additional work at contract price, agreed price and force account.) Unless otherwise stated, rates for rental of equipment cover only such time as equipment is actually used and no allowance will be made for idle time. This last percentage shown is the net accumulated increase or decrease from the original quantity in the Engineer's Estimate.

Adjustment of Compensation at Lump Sum:

ITEM 1.

Revise Special Provisions Section 8-3.01, "WELDING," subsection "GENERAL," to include at the end a new sub-subsection "Welding Padeyes," as shown on sheet two (2) of this change order.

Replace shoulder-type eyebolts on the crossbeams with padeyes, upgrade the existing padeyes on the tower, and eliminate all eyebolts and all padeyes on the OBG (including bikepath and counterweights) as shown on sheets three (3) through twenty-three (23) of this change order. The following revised sheets detail all changes: 912R2, 913R3, 914R2, 929R1, 931R1, 932R1, 933R2, 934R1, 935R1, 936R1, 937R1, 938R3, 944R1, 945R1, 946R1, 947R1, 948R2, 949R1, 950R3, 954R1 and 955R1 (of 1204).

This change order resolves costs associated with Contractor Request For Information (RFI) Nos. 248, 314, 408, 529, 572, 1014, 1079, 1079R1, 1141, 1195, 1393, 1609 and 1610 with respect to the changes in this change order.

For this work, the Contractor will be paid the sum of $86,300.00. This sum constitutes full compensation, including all mark ups, for this work.

Adjustment of Compensation at Lump Sum Price..... $86,300.00

ITEM 2.

The items identified above in this change order have been paid as part of CCO 108 resolution. Therefore, the amount due under this change order will be adjusted by the amount paid under CCO 108 to prevent a double payment. Total amount paid under CCO 108, and to be credited to this change, is $86,300.00.

Adjustment of Compensation at Lump Sum Price..... <$86,300.00>

CHANGE ORDER COST AND TIME SUMMARY

(ITEM 1) Adjustment of Compensation for work pursuant to this change order	$86,300.00
(ITEM 2) Amount paid under CCO 108 for this change order	<$86,300.00>
Total net pay for this change order	$0.00

Contract time is addressed in CCO 108 for all work identified in this change order. Therefore, contract time will not be adjusted in this change order.

Estimated Cost: Increase ☐ Decrease ☐ $0.00

By reason of this order the time of completion will be adjusted as follows: 0 Days

Submitted by

Signature **Resident Engineer** Brian Boal for Gary Pursell, Sup.T.E. **Date** 1 MARCH 2010

Approval Recommended by

Signature **Supervising Transportation Engineer** Gary Pursell, Sup. T.E. **Date** 3/1/2010

Engineer Approval by

Signature **Supervising Transportation Engineer** Gary Pursell, Sup. T.E. **Date** 6/30/10

We the undersigned contractor, have given careful consideration to the change proposed and agree, if this proposal is approved, that we will provide all equipment, furnish the materials, except as otherwise be noted above, and perform all services necessary for the work above specified, and will accept as full payment therefor the prices shown above.

NOTE: If you, the contractor, do not sign acceptance of this order, your attention is directed to the requirements of the specifications as to proceeding with the ordered work and filing a written protest within the time therein specified.

Contractor Acceptance by

Signature (Print name and title) Michael D. Flowers Project Director **Date** 6-29-10

Revise Section 8-3.01, "WELDING," to include a new subsection "Welding Padeyes" to appear at the end of the GENERAL subsection:

8-3.01 WELDING

GENERAL

Welding Padeyes

Weld Crosby No. 4 or equivalent padeyes to steel structures in accordance with AWS D1.5, as modified by this specification. Use a Welding Procedure Specification (WPS) approved for welding the type and thickness of base material to which the padeye is welded. Qualification of a procedure for welding to padeyes is required for each supplier with padeyes attached to their work. Qualify the procedure as follows for each supplier:

1. Fabricate three test samples of a padeye welded to a plate.
   a) If a supplier's work includes Seismic Performance Critical Member (SPCM) material, use the thinnest SPCM plate material to which padeyes will be welded. If a supplier's work does not include SPCM material, use the thinnest plate material to which padeyes will be welded.
   b) Weld the padeye to the plate using a WPS approved for welding the base metal. A separate WPS for the padeye to plate weld is not required.

2. Test the three samples as follows. Test machinery must be capable of loading the samples to failure. Apply the force at the circular end of the padeyes.
   a) Sample #1 - Load in shear direction. Failure must occur at a force greater than 22.2 kN.
   b) Sample #2 - Load in tension to destruction. Failure must occur at a force greater than 22.2 kN.
   c) Sample #3 - Take three subsized Charpy V-Notch specimens per ASTM A 370 from the course grained area of the Heat affected zone in the base metal. Perform Charpy V-Notch test in accordance with Special Provisions, Section 10-1.59 "Steel Structures," subsection "Materials".

Submit a test method to the Engineer for approval prior to performing the procedure qualification.

REGISTERED PROFESSIONAL ENGINEER
BRIAN BOAL
No. 044647
Exp. 3/31/10
CIVIL
STATE OF CALIFORNIA

DIST.	COUNTY	ROUTE	KILOMETER POST TOTAL PROJECT	SHEET NO.	TOTAL SHEETS
04	SF	80	13.2/13.9	912R2	1204

Caltrans Metric

REGISTERED ENGINEER - CIVIL

12-6-04
PLANS APPROVAL DATE

REGISTERED PROFESSIONAL ENGINEER Tien Hung Ho No. C 43990 Exp. 06/30/09 CIVIL STATE OF CALIFORNIA

The State of California or its officers or agents shall not be responsible for the accuracy or completeness of electronic copies of this plan sheet.

T.Y. LIN / MOFFATT & NICHOL
825 BATTERY STREET
SAN FRANCISCO, CA 94111

Caltrans now has a web site! To get to the web site, go to: http://www.dot.ca.gov

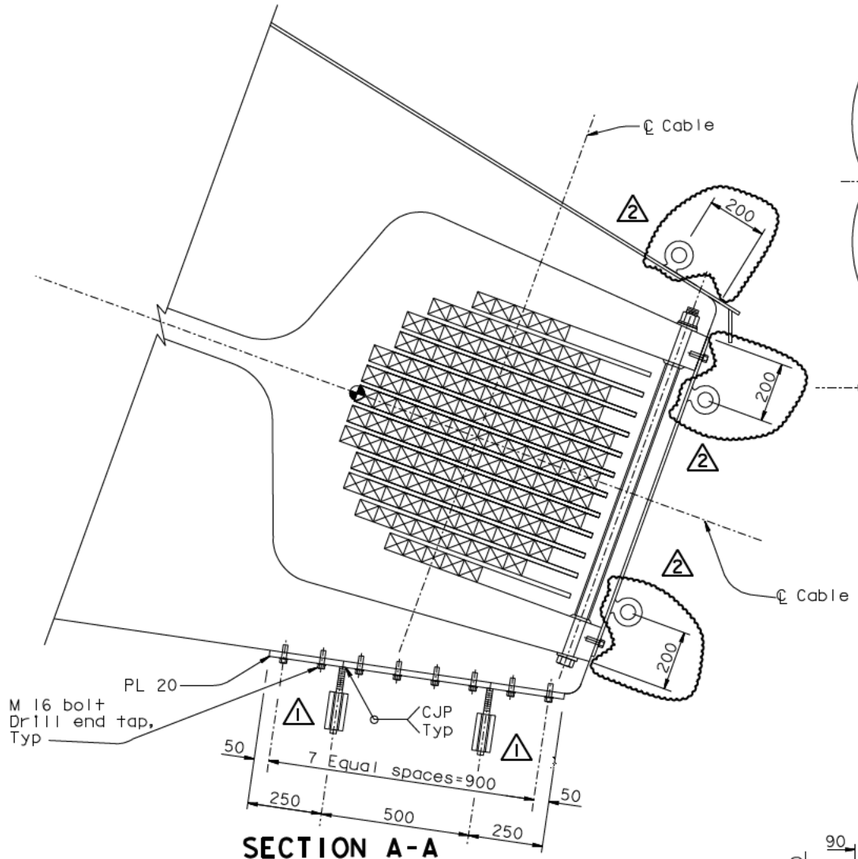

SECTION A-A
1:10

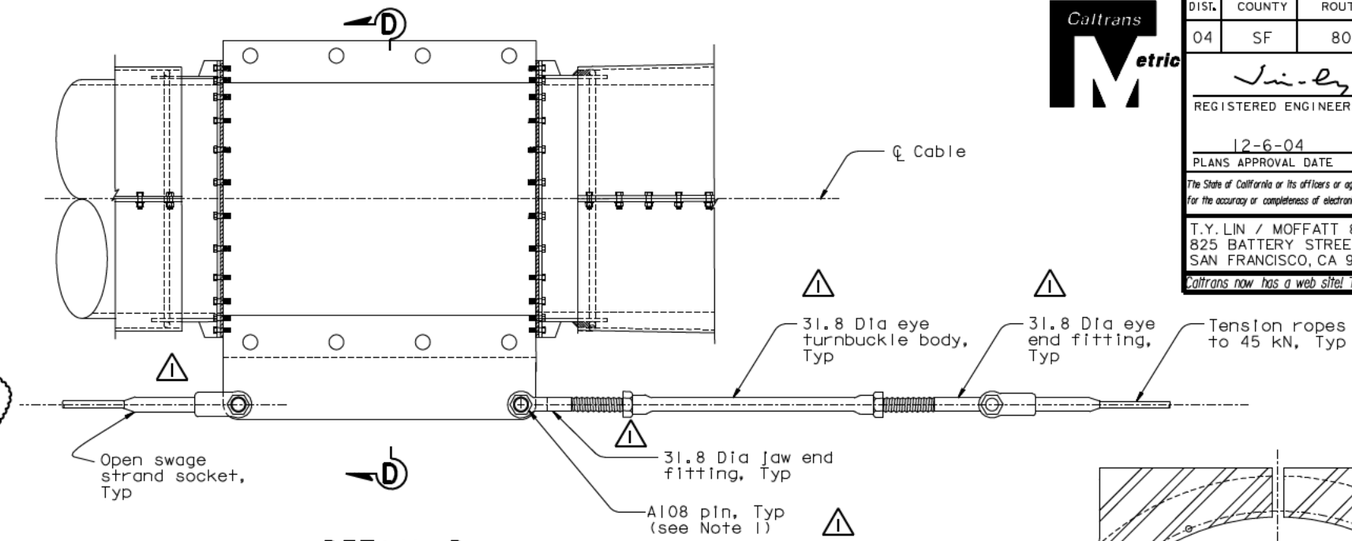

DETAIL D (Detail C similar)
1:10

MARK	DATE	DESCRIPTIONS	BY	CH'D	CCO#
2	06/22/07	WELDED PADEYES	NV	TH	41
1	04/20/07	WEST ANCHORAGE ACCESS DETAILS	GB	TH	28

REVISIONS

CONTRACT CHANGE ORDER NO. ____
SHEET ___ OF ___

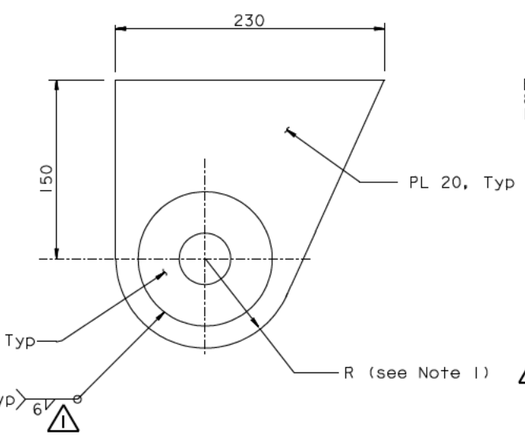

ANCHOR PLATE ASSEMBLY DETAIL
1:2.5

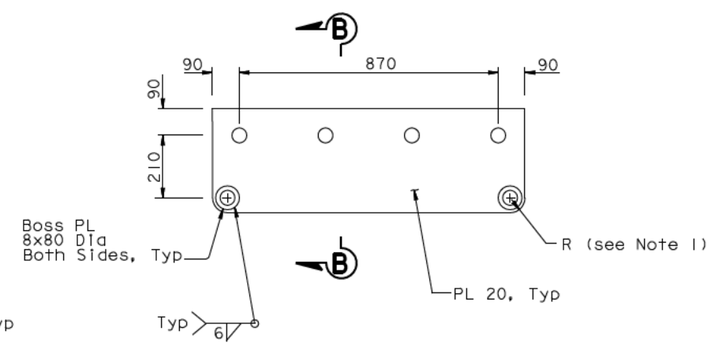

CABLE BAND PLATE ASSEMBLY DETAIL
1:10

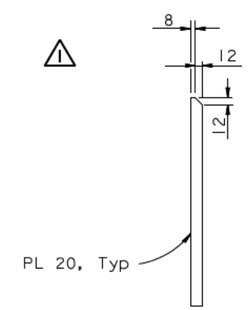

SECTION B-B
1:5

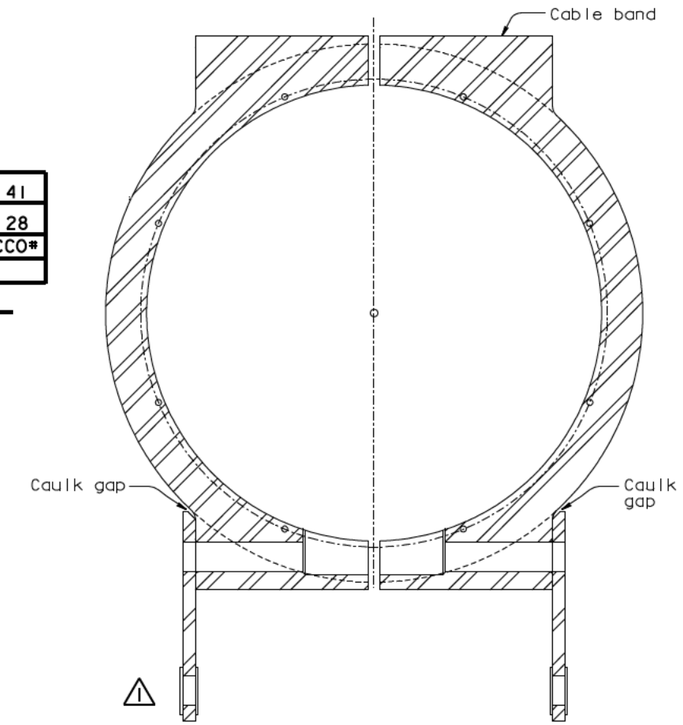

SECTION D-D
1:5

NOTES:

1. For pin details see "Cable Handrope Details No. 2" sheet.

ALL DIMENSIONS ARE IN MILLIMETERS UNLESS OTHERWISE SHOWN

R. Valizadeh/V. Toan/Y.L./W.L./F.C.
DESIGN OVERSIGHT
SIGN OFF DATE 06/22/07

	BY	CHECKED
DESIGN	T. Ho	N. Vo
DETAILS	J. Sun	N. Vo
QUANTITIES	T. Ho	N. Vo

PREPARED FOR THE STATE OF CALIFORNIA DEPARTMENT OF TRANSPORTATION

R. Manzanarez
PROJECT ENGINEER

BRIDGE NO. 34-0006L/R
KILOMETER POST 13.2/13.9

SAN FRANCISCO OAKLAND BAY BRIDGE
EAST SPAN SEISMIC SAFETY PROJECT
SELF-ANCHORED SUSPENSION BRIDGE
(SUPERSTRUCTURE & TOWER)

WEST ANCHORAGE ACCESS DETAILS NO. 3

Rev. Date: 5-18-98

ORIGINAL SCALE IN MILLIMETERS FOR REDUCED PLANS 0 10 20 30 40 50 60 70 80 90 100

CU 04
EA 0120F1

DISREGARD PRINTS BEARING EARLIER REVISION DATES

REVISION DATES (PRELIMINARY STAGE ONLY) 08/28/99 05/31/01 04/26/02 07/24/02 12/18/02 09/06/04

SHEET 495R2 OF

FILE -> I:\bb\04-012001\sas\contract plans and cco\cco\in progress\cco#41\dgn\akacc02e.dgn

USERNAME => ptom DATE PLOTTED => 29 JUN 2007 TIME PLOTTED => 09:52:26

100 % PS&E

DIST.	COUNTY	ROUTE	KILOMETER POST TOTAL PROJECT	SHEET NO.	TOTAL SHEETS
04	SF	80	13.2/13.9	913R3	1204

Caltrans Metric

REGISTERED ENGINEER - CIVIL

12-6-04
PLANS APPROVAL DATE

REGISTERED PROFESSIONAL ENGINEER Tien Hung Ho No. C 43990 Exp. 06/30/09 CIVIL STATE OF CALIFORNIA

The State of California or its officers or agents shall not be responsible for the accuracy or completeness of electronic copies of this plan sheet.

T.Y. LIN / MOFFATT & NICHOL
825 BATTERY STREET
SAN FRANCISCO, CA 94111

Caltrans now has a web site! To get to the web site, go to: http://www.dot.ca.gov

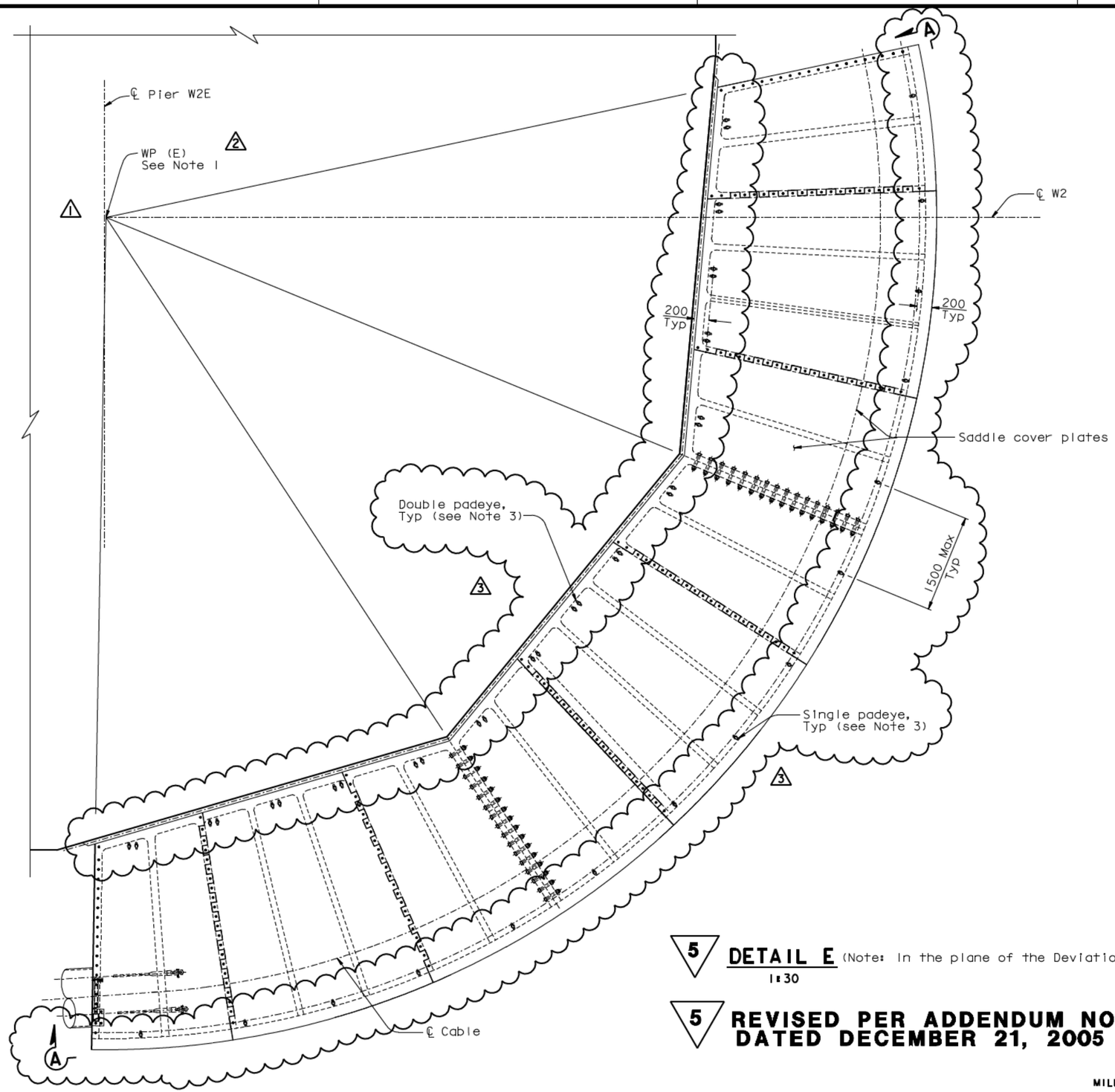

5 **DETAIL E** (Note: In the plane of the Deviation saddle)
1:30

5 **REVISED PER ADDENDUM NO. 5 DATED DECEMBER 21, 2005**

MARK	DATE	DESCRIPTIONS	BY	CH'D	CCO#
3	06/22/07	WELDED PADEYES	NV	TH	41
2	04/20/07	WEST ANCHORAGE ACCESS DETAILS	GB	TH	28
1	01/31/07	WEST DEVIATION SADDLE GEOMETRY	PC	TH	15

REVISIONS

CONTRACT CHANGE ORDER NO. ____
SHEET ___ OF ___

1 NOTES:

1. WP(E) and WP(W) do not coincide with ℄ of Pier W2, ℄ Pier W2E nor ℄ Pier W2W.

3
2. For Section A-A see "West Anchorage Access Details No.5" sheet.
3. For double and single padeye details see "West Anchorage Access Details No.5" sheet.

ALL DIMENSIONS ARE IN MILLIMETERS UNLESS OTHERWISE SHOWN

R. Valtzadeh/V. Toan/Y.L./W.L./F.C.
DESIGN OVERSIGHT
SIGN OFF DATE 06/22/07

	BY	CHECKED
DESIGN	T. Ho	N. Vo
DETAILS	J. Sun	N. Vo
QUANTITIES	T. Ho	N. Vo

PREPARED FOR THE STATE OF CALIFORNIA DEPARTMENT OF TRANSPORTATION

R. Manzanarez
PROJECT ENGINEER

BRIDGE NO. 34-0006L/R
KILOMETER POST 13.2/13.9

SAN FRANCISCO OAKLAND BAY BRIDGE
EAST SPAN SEISMIC SAFETY PROJECT
SELF-ANCHORED SUSPENSION BRIDGE
(SUPERSTRUCTURE & TOWER)

WEST ANCHORAGE ACCESS DETAILS NO. 4

Rev. Date: 5-18-98

ORIGINAL SCALE IN MILLIMETERS FOR REDUCED PLANS 0 10 20 30 40 50 60 70 80 90 100

CU 04
EA 0120F1

DISREGARD PRINTS BEARING EARLIER REVISION DATES

REVISION DATES (PRELIMINARY STAGE ONLY) 05/31/01 04/08/02 07/09/02 12/19/02 09/08/04 12/07/05

SHEET 496R3 OF

FILE -> I:\bb\04-012001\sas\contract plans and cco\cco\in progress\cco#41\dgn\akacc02f.dgn

100 % PS&E

DATE PLOTTED => 03 JUL 2007 TIME PLOTTED => 11:04:11

USERNAME => pfrom

MARK	DATE	DESCRIPTIONS	BY	CH'D	CCO#
2	06/22/07	WELDED PADEYES	NV	TH	41
1	04/20/07	WEST ANCHORAGE ACCESS DETAILS	GB	TH	28

REVISIONS

CONTRACT CHANGE ORDER NO. ____
SHEET ___ OF ___

Caltrans Metric

DIST.	COUNTY	ROUTE	KILOMETER POST TOTAL PROJECT	SHEET NO.	TOTAL SHEETS
04	SF	80	13.2/13.9	914R2	1204

REGISTERED ENGINEER - CIVIL
12-6-04
PLANS APPROVAL DATE

REGISTERED PROFESSIONAL ENGINEER Tien Hung Ho No. C 43990 Exp. 06/30/09 CIVIL STATE OF CALIFORNIA

The State of California or its officers or agents shall not be responsible for the accuracy or completeness of electronic copies of this plan sheet.

T.Y. LIN / MOFFATT & NICHOL
825 BATTERY STREET
SAN FRANCISCO, CA 94111

Caltrans now has a web site! To get to the web site, go to: http://www.dot.ca.gov

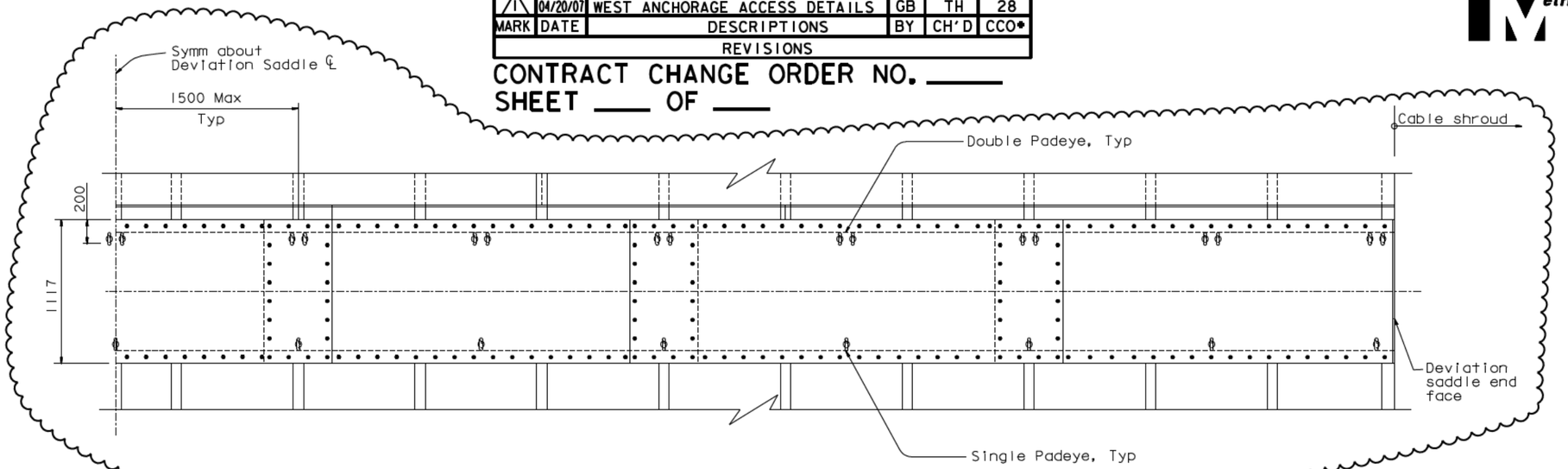

SECTION A-A
1:20

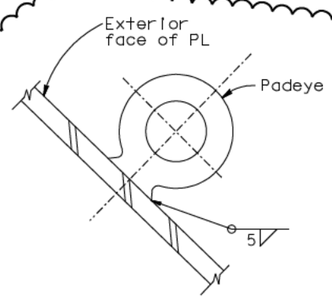

SECTION B-B
1:1.25

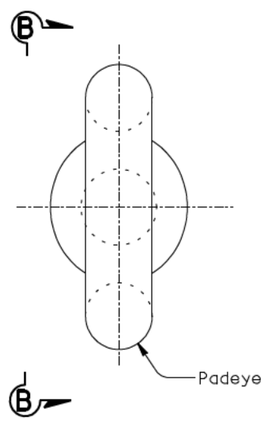

SINGLE PADEYE DETAIL
1:1.25

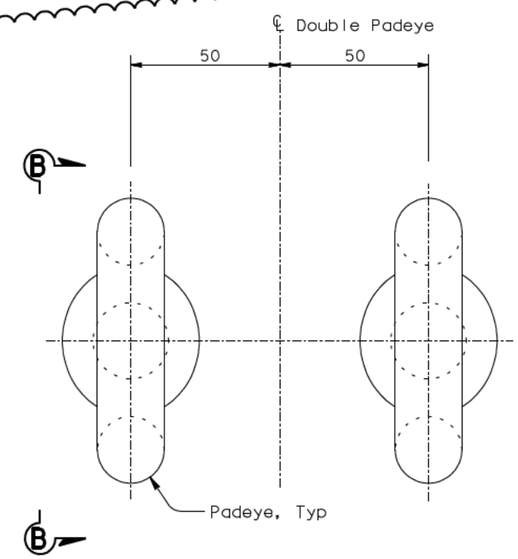

DOUBLE PADEYE DETAIL
1:1.25

ALL DIMENSIONS ARE IN MILLIMETERS UNLESS OTHERWISE SHOWN

SAN FRANCISCO OAKLAND BAY BRIDGE
EAST SPAN SEISMIC SAFETY PROJECT
SELF-ANCHORED SUSPENSION BRIDGE
(SUPERSTRUCTURE & TOWER)

WEST ANCHORAGE ACCESS DETAILS NO. 5

R. Vallzadeh/V. Toan/Y.L./W.L./F.C.
DESIGN OVERSIGHT
Roger Vallzadeh / Vong Toan / Y. Liu
SIGN OFF DATE 06/22/07

	BY	CHECKED
DESIGN	T. Ho	N. Vo
DETAILS	J. Sun	N. Vo
QUANTITIES	T. Ho	N. Vo

PREPARED FOR THE STATE OF CALIFORNIA DEPARTMENT OF TRANSPORTATION

R. Manzanarez
PROJECT ENGINEER

BRIDGE NO. 34-0006L/R
KILOMETER POST 12.6/13.9

CU 04
EA 0120F1

DISREGARD PRINTS BEARING EARLIER REVISION DATES 05/24/01 04/08/02 07/01/02 12/19/02

REVISION DATES (PRELIMINARY STAGE ONLY)

SHEET 497R2 OF

Rev. Date: 5-18-98

ORIGINAL SCALE IN MILLIMETERS FOR REDUCED PLANS 0 10 20 30 40 50 60 70 80 90 100

FILE -> I:\bb\04-012001\sas\contract plans and cco\cco\in progress\cco#41\dgn\akacc02g.dgn

100 % PS&E

DATE PLOTTED => 29 JUN 2007 TIME PLOTTED => 09:58:37

USERNAME => ptom

DIST.	COUNTY	ROUTE	KILOMETER POST TOTAL PROJECT	SHEET NO.	TOTAL SHEETS
04	SF	80	13.2/13.9	929R1	1204

REGISTERED ENGINEER - CIVIL

12-6-04
PLANS APPROVAL DATE

REGISTERED PROFESSIONAL ENGINEER Marwan N. Nader No. C 054426 Exp. 12/31/07 CIVIL STATE OF CALIFORNIA

The State of California or its officers or agents shall not be responsible for the accuracy or completeness of electronic copies of this plan sheet.

T.Y. LIN / MOFFATT & NICHOL
825 BATTERY STREET
SAN FRANCISCO, CA 94111

Caltrans now has a web site! To get to the web site, go to: http://www.dot.ca.gov

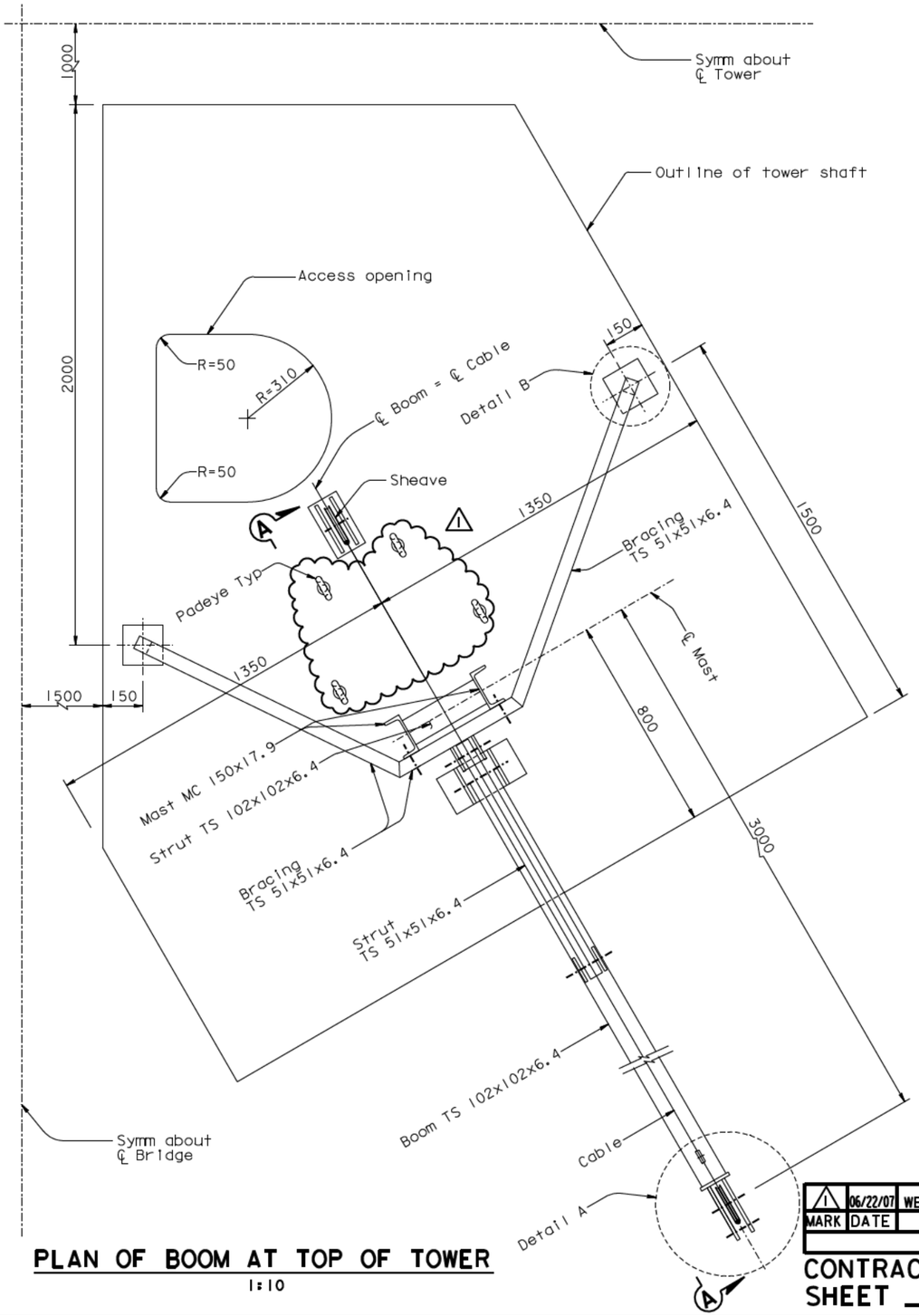

PLAN OF BOOM AT TOP OF TOWER

1:10

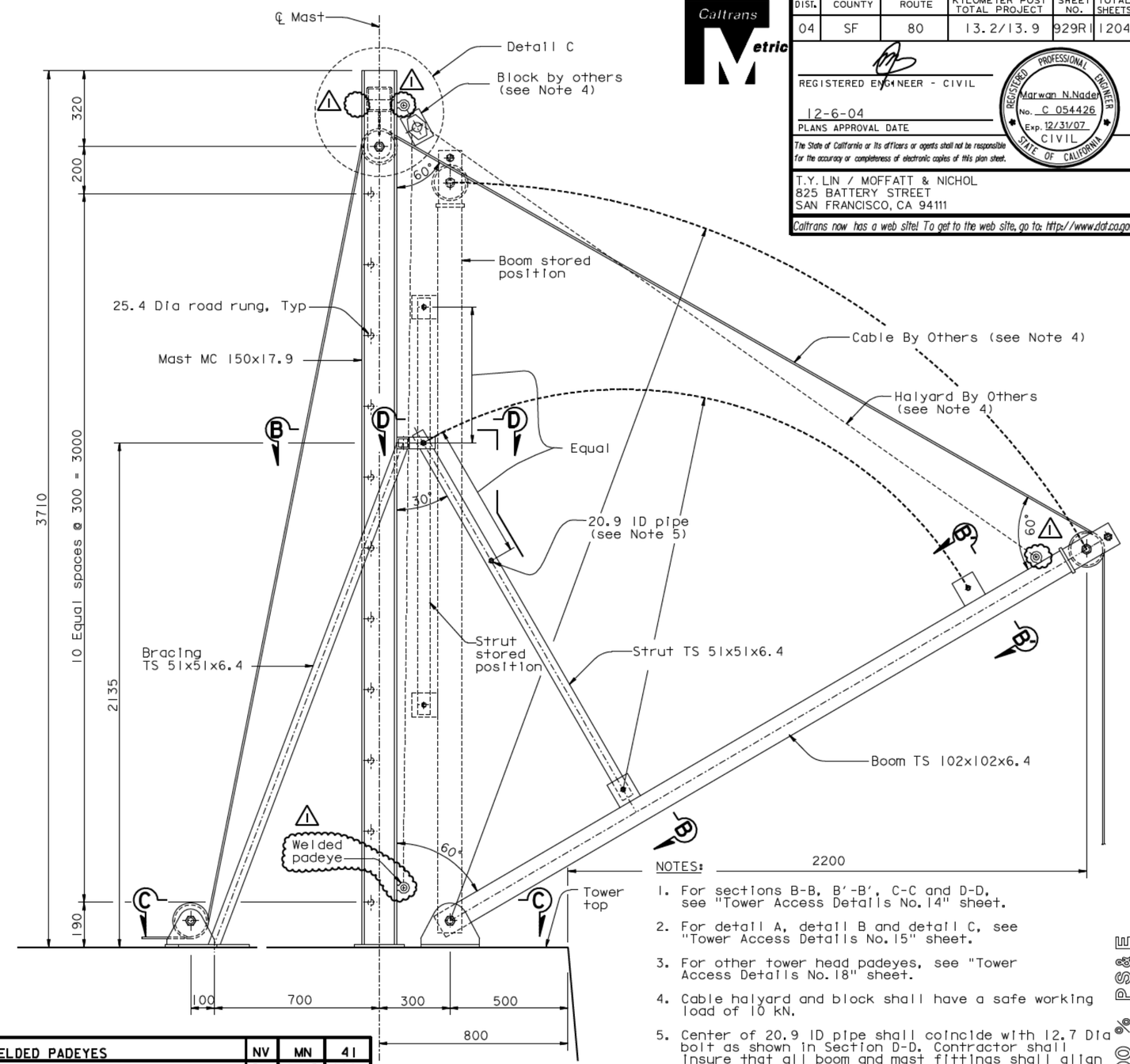

SECTION A-A

1:10

ALL DIMENSIONS ARE IN MILLIMETERS UNLESS OTHERWISE SHOWN

NOTES:

1. For sections B-B, B'-B', C-C and D-D, see "Tower Access Details No. 14" sheet.
2. For detail A, detail B and detail C, see "Tower Access Details No. 15" sheet.
3. For other tower head padeyes, see "Tower Access Details No. 18" sheet.
4. Cable halyard and block shall have a safe working load of 10 kN.
5. Center of 20.9 ID pipe shall coincide with 12.7 Dia bolt as shown in Section D-D. Contractor shall insure that all boom and mast fittings shall align in both stored and extended positions.
6. For Padeye typical detail and design force, see "Girder Access Details No. 10" sheet.

MARK	DATE	DESCRIPTIONS	BY	CH'D	CCO#
1	06/22/07	WELDED PADEYES	NV	MN	41

REVISIONS

CONTRACT CHANGE ORDER NO. ____
SHEET ___ OF ___

R. Valizadeh/V. Toan/Y.L./W.L./F.C.
DESIGN OVERSIGHT
SIGN OFF DATE 06/22/07

DESIGN	BY M. Nader	CHECKED N. Vo	
DETAILS	BY G. Baker	CHECKED N. Vo	
QUANTITIES	BY G. Baker	CHECKED N. Vo	

PREPARED FOR THE STATE OF CALIFORNIA DEPARTMENT OF TRANSPORTATION

R. Manzanarez
PROJECT ENGINEER

BRIDGE NO. 34-0006L/R
KILOMETER POST 13.2/13.9

SAN FRANCISCO OAKLAND BAY BRIDGE
EAST SPAN SEISMIC SAFETY PROJECT
SELF-ANCHORED SUSPENSION BRIDGE
(SUPERSTRUCTURE & TOWER)

TOWER ACCESS DETAILS NO. 13

Rev. Date: 5-18-98

ORIGINAL SCALE IN MILLIMETERS FOR REDUCED PLANS 0 10 20 30 40 50 60 70 80 90 100

CU 04
EA 0120F1

DISREGARD PRINTS BEARING EARLIER REVISION DATES

REVISION DATES (PRELIMINARY STAGE ONLY) 04/08/02 07/09/02 12/19/02

SHEET 512R1 OF

100 % PS&E

DATE PLOTTED => 29 JUN 2007 TIME PLOTTED => 10:00:38

USERNAME => pfrom

FILE -> I:\bb\04-012001\sas\contract plans and cco\cco\in progress\cco#41\dgn\akacc13b.dgn

DIST.	COUNTY	ROUTE	KILOMETER POST TOTAL PROJECT	SHEET NO.	TOTAL SHEETS
04	SF	80	13.2/13.9	931R1	1204

REGISTERED ENGINEER - CIVIL

12-6-04
PLANS APPROVAL DATE

Marwan N.Nader
No. C 54426
Exp. 12/31/07
CIVIL
REGISTERED PROFESSIONAL ENGINEER
STATE OF CALIFORNIA

The State of California or its officers or agents shall not be responsible for the accuracy or completeness of electronic copies of this plan sheet.

T.Y. LIN / MOFFATT & NICHOL
825 BATTERY STREET
SAN FRANCISCO, CA 94111

Caltrans now has a web site! To get to the web site, go to: http://www.dot.ca.gov

Caltrans Metric

MARK	DATE	DESCRIPTIONS	BY	CH'D	CCO#
1	06/22/07	WELDED PADEYES	NV	MN	41

REVISIONS

CONTRACT CHANGE ORDER NO. ____
SHEET ___ OF ___

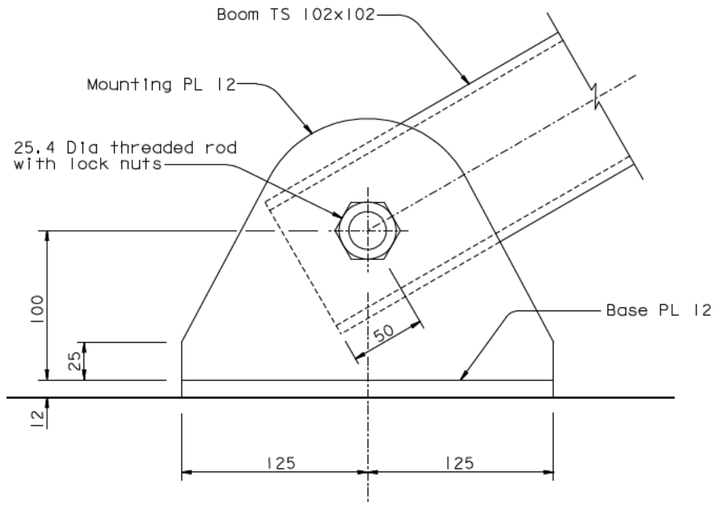

VIEW F-F
1:2

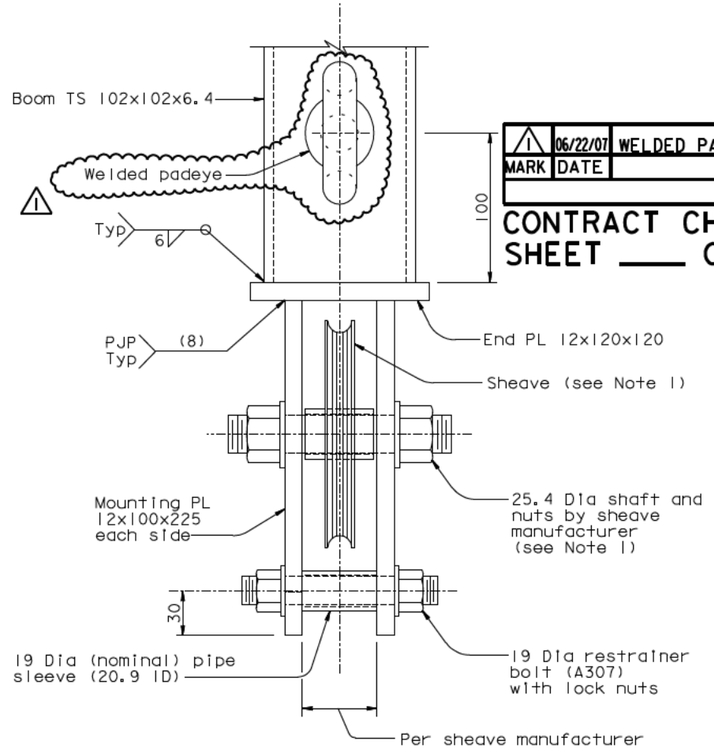

DETAIL A
1:2

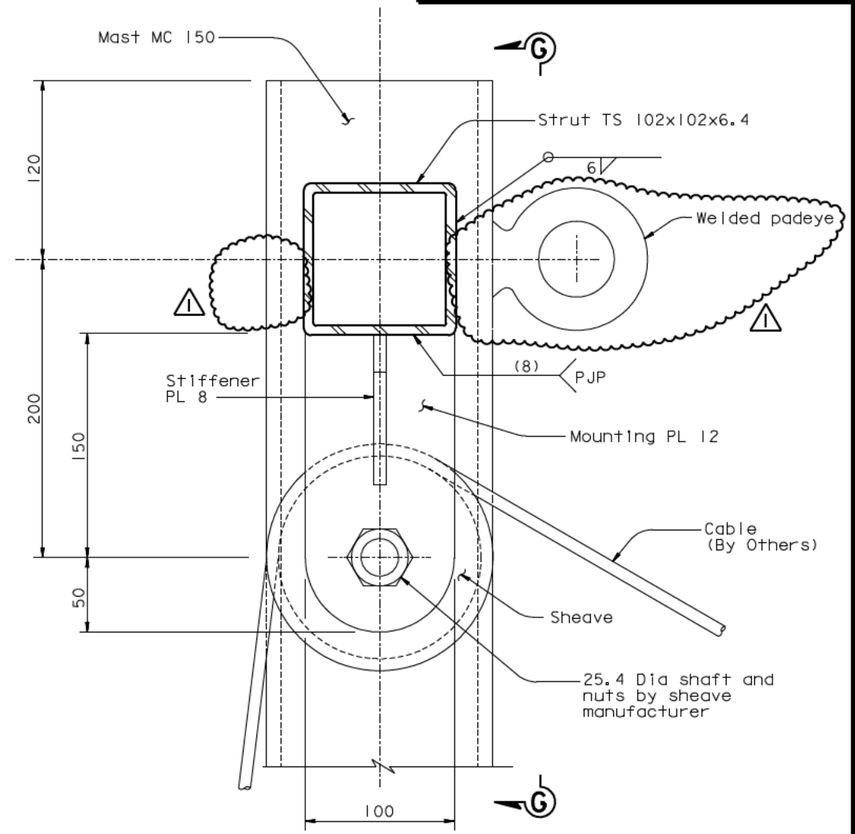

DETAIL C
1:2

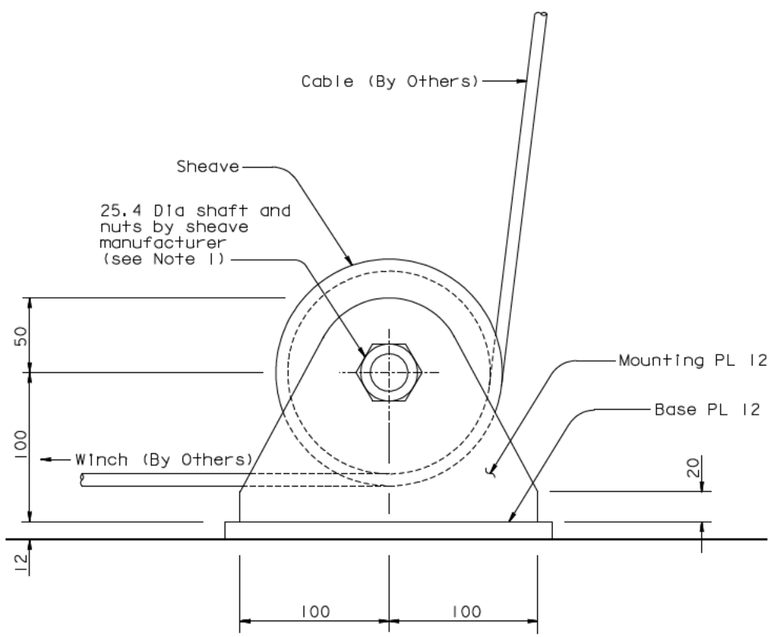

VIEW E-E
1:2

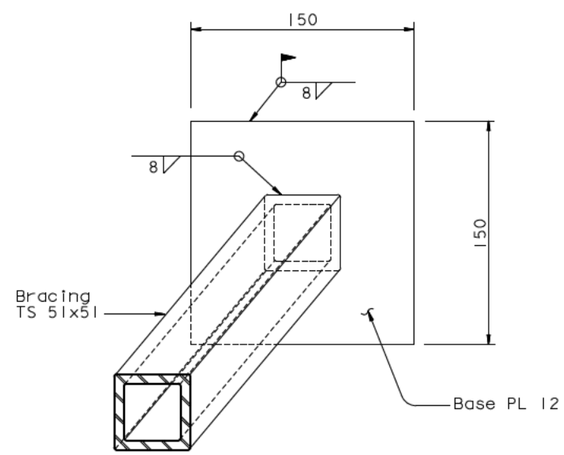

DETAIL B
1:2

NOTES:

1. Sheaves shall be 150 mm Dia with 10 mm groove and a minimum safe working load of 20 kN. Contractor shall provide fasteners for sheaves.
2. For View G-G, see "Tower Access Details No.16" sheet.
3. For padeye typical detail and design force, see "Girder Access Details No.10" sheet.

ALL DIMENSIONS ARE IN MILLIMETERS UNLESS OTHERWISE SHOWN

SAN FRANCISCO OAKLAND BAY BRIDGE
EAST SPAN SEISMIC SAFETY PROJECT
SELF-ANCHORED SUSPENSION BRIDGE
(SUPERSTRUCTURE & TOWER)

TOWER ACCESS DETAILS NO. 15

R. Valizadeh/V. Toan/Y.L./W.L./F.C.
DESIGN OVERSIGHT
SIGN OFF DATE 06/22/07

	BY	CHECKED
DESIGN	M. Nader	N. Vo
DETAILS	G. Baker	N. Vo
QUANTITIES	G. Baker	N. Vo

PREPARED FOR THE STATE OF CALIFORNIA DEPARTMENT OF TRANSPORTATION

R. Manzanarez
PROJECT ENGINEER

BRIDGE NO. 34-0006L/R
KILOMETER POST 13.2/13.9

CU 04
EA 0120F1

DISREGARD PRINTS BEARING EARLIER REVISION DATES

REVISION DATES (PRELIMINARY STAGE ONLY) 04/08/02 07/09/02 12/19/02

SHEET 514R1 OF

Rev. Date: 5-18-98

ORIGINAL SCALE IN MILLIMETERS FOR REDUCED PLANS 0 10 20 30 40 50 60 70 80 90 100

FILE -> I:\bb\04-012001\sas\contract plans and cco\cco\in progress\cco#41\dgn\akacc15b.dgn

100 % PS&E

DATE PLOTTED => 29 JUN 2007 TIME PLOTTED => 10:02:04

USERNAME => ptom

DIST.	COUNTY	ROUTE	KILOMETER POST TOTAL PROJECT	SHEET NO.	TOTAL SHEETS
04	SF	80	13.2/13.9	932R1	1204

Caltrans Metric

REGISTERED ENGINEER - CIVIL

12-6-04
PLANS APPROVAL DATE

REGISTERED PROFESSIONAL ENGINEER Marwan N.Nader No. C 54426 Exp. 12/31/07 CIVIL STATE OF CALIFORNIA

The State of California or its officers or agents shall not be responsible for the accuracy or completeness of electronic copies of this plan sheet.

T.Y. LIN / MOFFATT & NICHOL
825 BATTERY STREET
SAN FRANCISCO, CA 94111

Caltrans now has a web site! To get to the web site, go to: http://www.dot.ca.gov

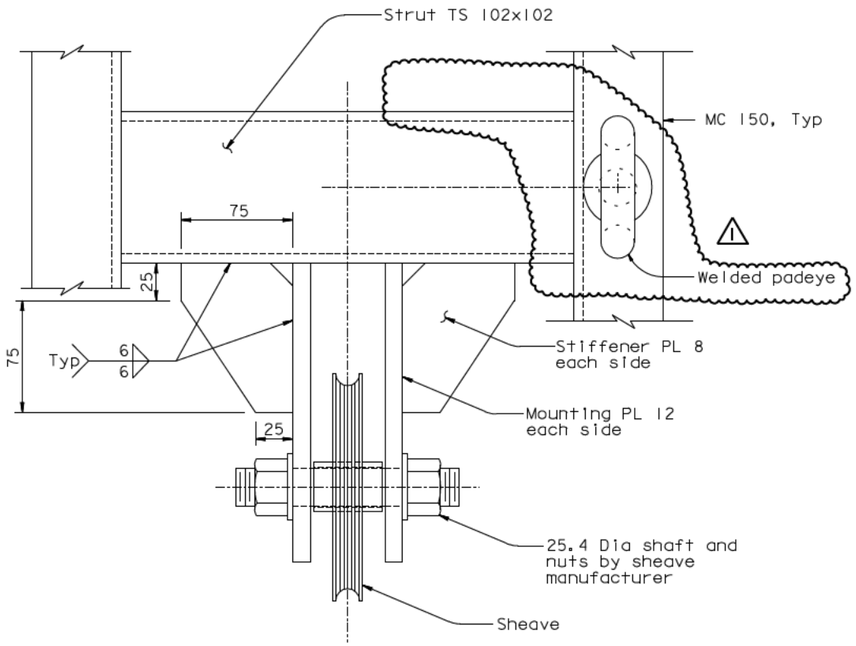

VIEW G-G
1:2

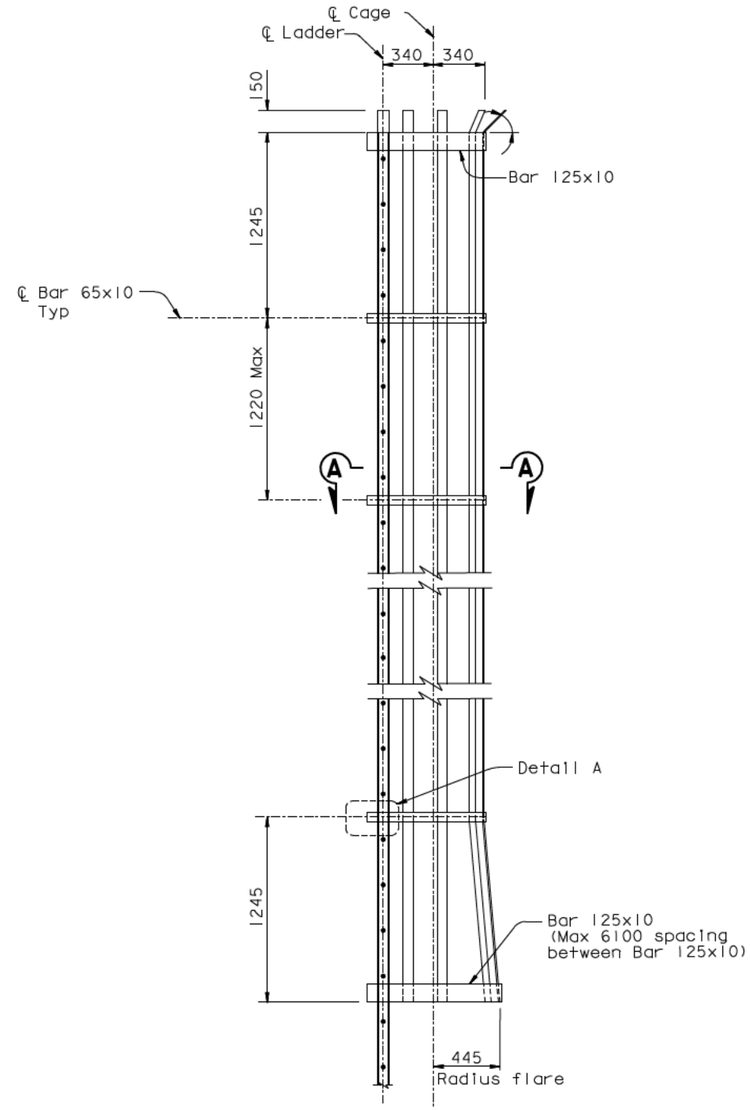

LADDER SAFETY CAGE ELEVATION
1:20

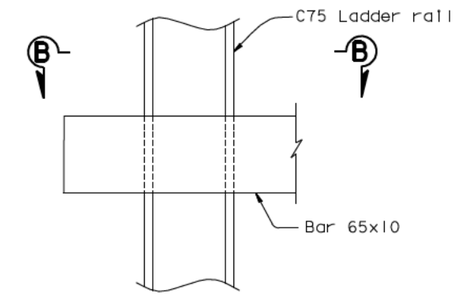

DETAIL A
1:2.5

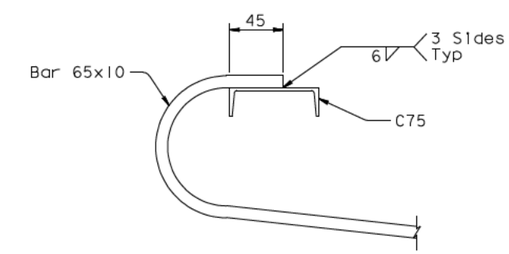

SECTION B-B
1:2.5

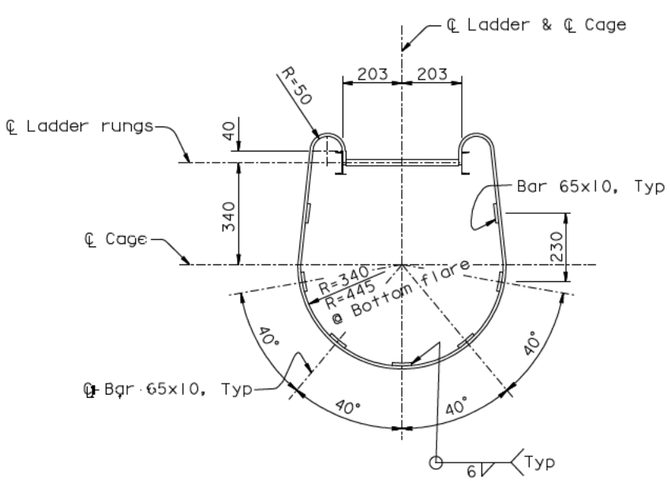

SECTION A-A (Rotated 90° clockwise)
1:10

NOTES:

1. For ladder details, see "Tower Access Details No. 7" sheet.
2. For Padeye typical details and design force, see "Girder Access Details No.10" sheet.

MARK	DATE	DESCRIPTIONS	BY	CH'D	CCO#
1	06/22/07	WELDED PADEYES	NV	MN	41

REVISIONS

CONTRACT CHANGE ORDER NO. ____
SHEET ___ OF ___

ALL DIMENSIONS ARE IN MILLIMETERS UNLESS OTHERWISE SHOWN

R. Valizadeh/V. Toan/Y.L./W.L./F.C.
DESIGN OVERSIGHT
SIGN OFF DATE 06/22/07

	BY	CHECKED
DESIGN	M. Nader	N. Vo
DETAILS	G. Baker	N. Vo
QUANTITIES	G. Baker	N. Vo

PREPARED FOR THE STATE OF CALIFORNIA DEPARTMENT OF TRANSPORTATION

R. Manzanarez
PROJECT ENGINEER

BRIDGE NO. 34-0006L/R
KILOMETER POST 13.2/13.9

SAN FRANCISCO OAKLAND BAY BRIDGE
EAST SPAN SEISMIC SAFETY PROJECT
SELF-ANCHORED SUSPENSION BRIDGE
(SUPERSTRUCTURE & TOWER)

TOWER ACCESS DETAILS NO. 16

Rev. Date: 5-18-98

ORIGINAL SCALE IN MILLIMETERS FOR REDUCED PLANS 0 10 20 30 40 50 60 70 80 90 100

CU 04
EA 0120F1

DISREGARD PRINTS BEARING EARLIER REVISION DATES

REVISION DATES (PRELIMINARY STAGE ONLY) 04/08/02 07/01/02 12/19/02

SHEET 515R1 OF

FILE -> I:\bb\04-012001\sas\contract plans and cco\cco\In progress\cco#41\dgn\akacc16b.dgn

100 % PS&E

DATE PLOTTED => 29 JUN 2007 TIME PLOTTED => 10:03:51

USERNAME => ptom

DIST.	COUNTY	ROUTE	KILOMETER POST TOTAL PROJECT	SHEET NO.	TOTAL SHEETS
04	SF	80	13.2/13.9	933R2	1204

REGISTERED ENGINEER - CIVIL

12-6-04
PLANS APPROVAL DATE

REGISTERED PROFESSIONAL ENGINEER Marwan N. Nader No. C 054426 Exp. 12/31/09 CIVIL STATE OF CALIFORNIA

The State of California or its officers or agents shall not be responsible for the accuracy or completeness of electronic copies of this plan sheet.

T.Y. LIN / MOFFATT & NICHOL
825 BATTERY STREET
SAN FRANCISCO, CA 94111

Caltrans now has a web site! To get to the web site, go to: http://www.dot.ca.gov

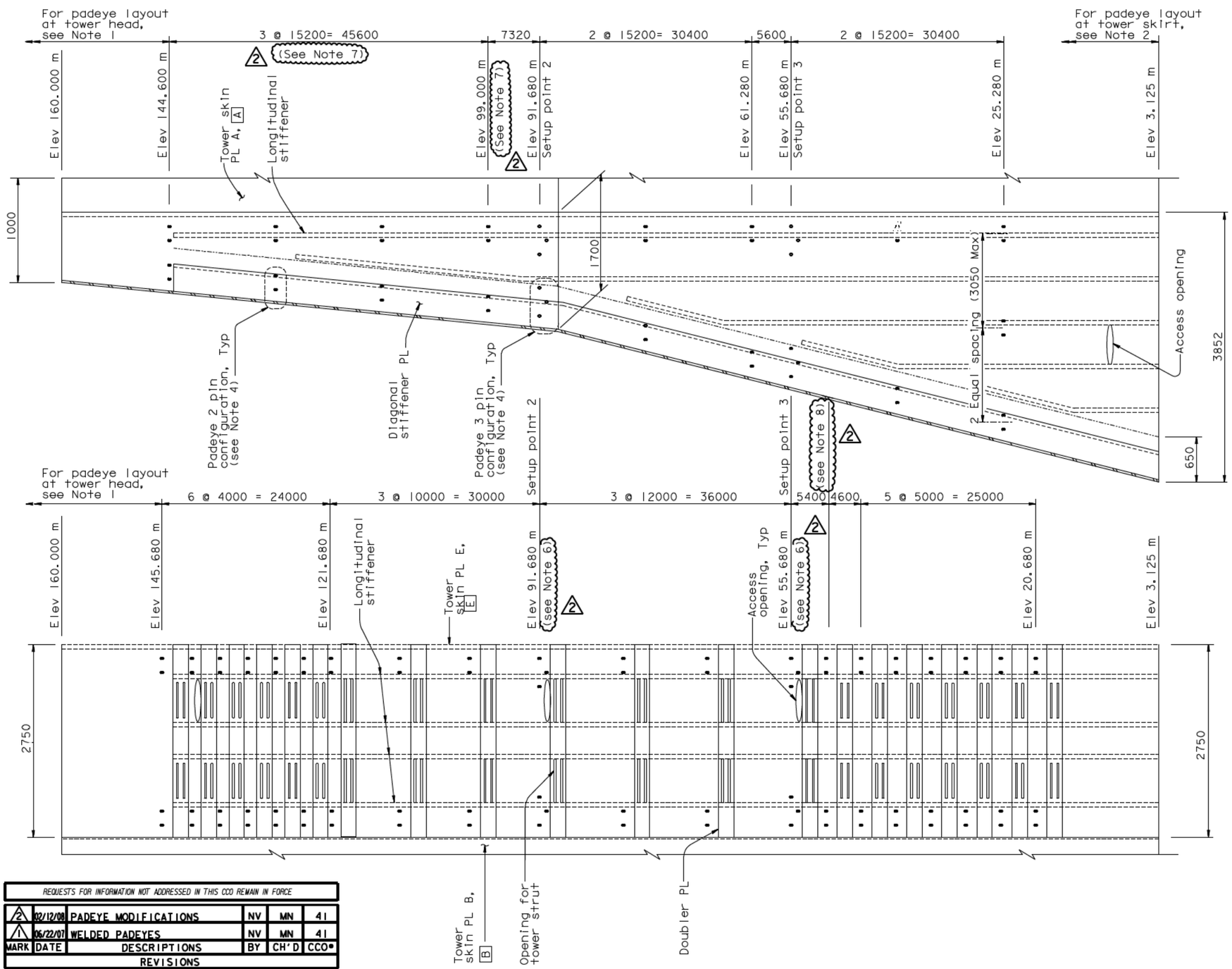

SECTION B-B
(Elevation of Skin Plate "B" Skin Plate "C" and "D" similar)
Horiz=1:30
Vert =1:300

SECTION A-A
(Elevation of Skin Plate "A" Skin Plate "E" similar)
Horiz=1:30
Vert =1:300

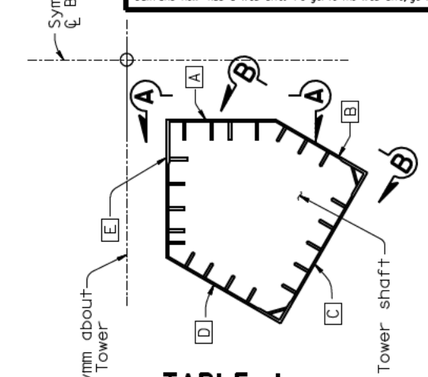

KEY PLAN

TABLE 1

Setup Points	Elevation	Pin Configuration
1	159.800 m	3
2	91.680 m	3
3	55.680 m	3
4	12.600 m	4

LEGEND:

D Tower skin PL designation
• Pad eye

NOTES:

1. For padeye layout at tower head, see "Tower Access Details No.18" sheet.
2. For padeye layout at tower skirt, see "Tower Access Details No.20" sheet.
3. For tower shaft details, see "Tower Shaft Details" sheets.
4. For padeye pin configuration details, see "Tower Access Details No.22" sheet.
5. For padeye typical detail and design force, see "Girder Access Details No.10" sheet. (1)
6. At elevations where padeyes interfere with doubler plates, all padeye sets at that elevation on all tower faces shall be relocated by +150 mm to clear.
7. At the Contractor's option, 3 spacings of 14800-13800-14300 (measured from top) may be used to clear tower splice #3 splice plates and strut facades. Padeyes at elevation 99.000 may be raised to elevation 101.700 accordingly. (2)
8. Padeyes at elevation 50.280 may be eliminated to clear Tower Splice #1.

PAD EYE LAYOUT AT TOWER SHAFTS

100 % PS&E

MARK	DATE	DESCRIPTIONS	BY	CH'D	CCO#
2	02/12/08	PADEYE MODIFICATIONS	NV	MN	41
1	06/22/07	WELDED PADEYES	NV	MN	41

REVISIONS

REQUESTS FOR INFORMATION NOT ADDRESSED IN THIS CCO REMAIN IN FORCE

CONTRACT CHANGE ORDER NO. ____
SHEET ___ OF ___

ALL DIMENSIONS ARE IN MILLIMETERS UNLESS OTHERWISE SHOWN

R. Vallzadeh/V. Toan/Y.L./W.L./F.C.
DESIGN OVERSIGHT
SIGN OFF DATE 02/12/08

	BY	CHECKED
DESIGN	M. Nader	N. Vo
DETAILS	L. Rus	D. Harrison
QUANTITIES	L. Rus	D. Harrison

PREPARED FOR THE STATE OF CALIFORNIA DEPARTMENT OF TRANSPORTATION

R. Manzanarez
PROJECT ENGINEER

BRIDGE NO. 34-0006L/R
KILOMETER POST 13.2/13.9

SAN FRANCISCO OAKLAND BAY BRIDGE
EAST SPAN SEISMIC SAFETY PROJECT
SELF-ANCHORED SUSPENSION BRIDGE
(SUPERSTRUCTURE & TOWER)

TOWER ACCESS DETAILS NO. 17

Rev. Date: 5-18-98

ORIGINAL SCALE IN MILLIMETERS FOR REDUCED PLANS 0 10 20 30 40 50 60 70 80 90 100

CU 04
EA 0120F1

DISREGARD PRINTS BEARING EARLIER REVISION DATES 04/08/02 07/01/02 12/19/02

SHEET 516R2 OF

FILE -> I:\bb\04-012001\sas\contract plans and cco\cco\in progress\cco#41\update 3-05-08\dgn\akacc17.dgn

USERNAME => ptom DATE PLOTTED => 05 MAR 2008 TIME PLOTTED => 15:46:09

DIST.	COUNTY	ROUTE	KILOMETER POST TOTAL PROJECT	SHEET NO.	TOTAL SHEETS
04	SF	80	13.2/13.9	934R1	1204

REGISTERED ENGINEER - CIVIL

12-6-04
PLANS APPROVAL DATE

REGISTERED PROFESSIONAL ENGINEER Marwan N. Nader No. C 054426 Exp. 12/31/07 CIVIL STATE OF CALIFORNIA

The State of California or its officers or agents shall not be responsible for the accuracy or completeness of electronic copies of this plan sheet.

T.Y. LIN / MOFFATT & NICHOL
825 BATTERY STREET
SAN FRANCISCO, CA 94111

Caltrans now has a web site! To get to the web site, go to: http://www.dot.ca.gov

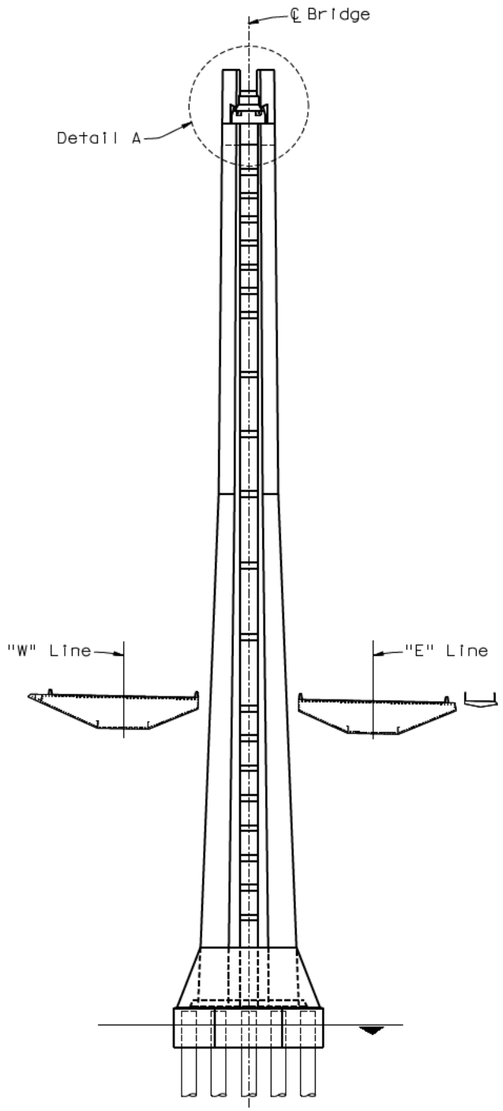

KEY ELEVATION
1:500

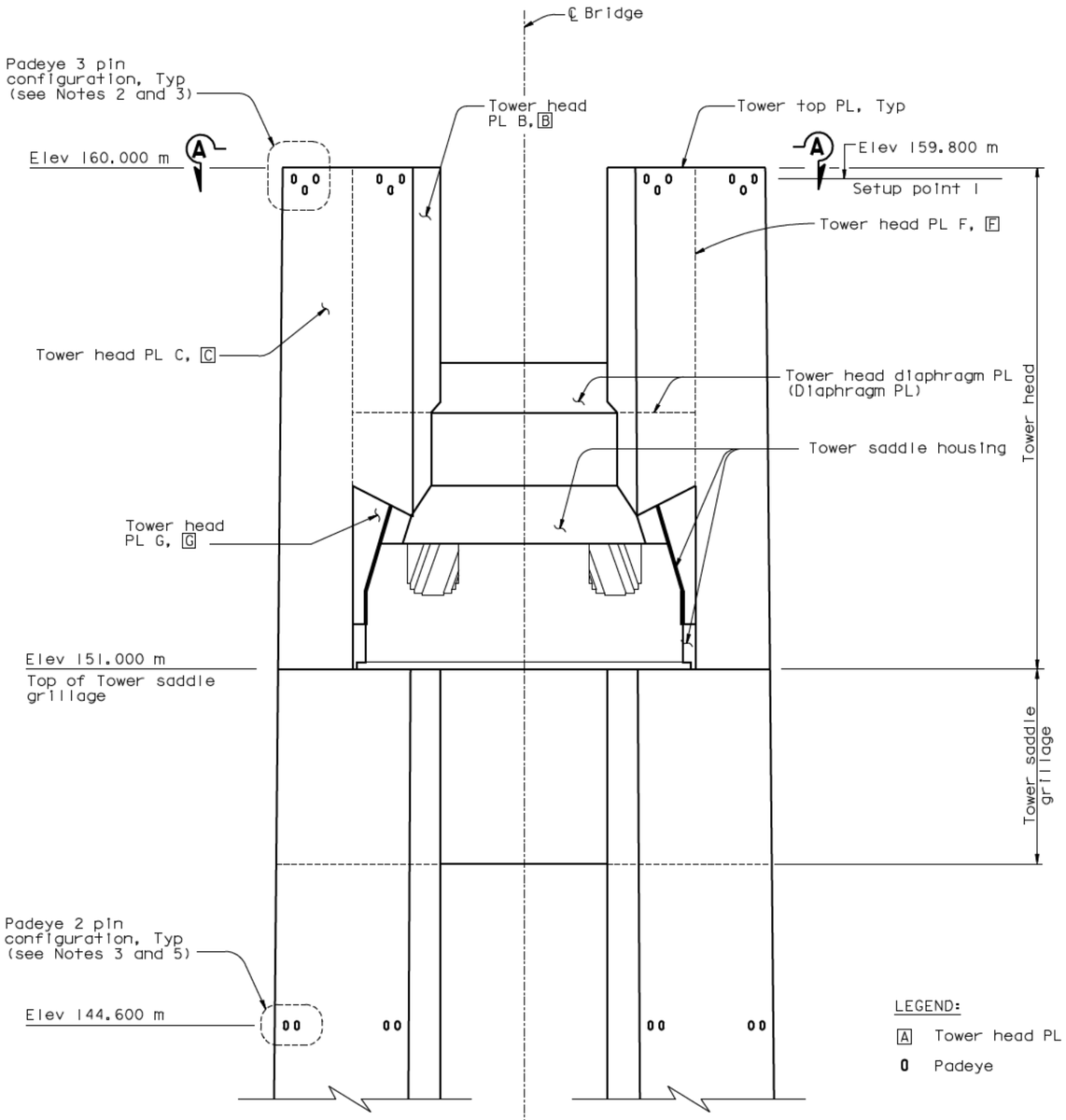

DETAIL A
1:50

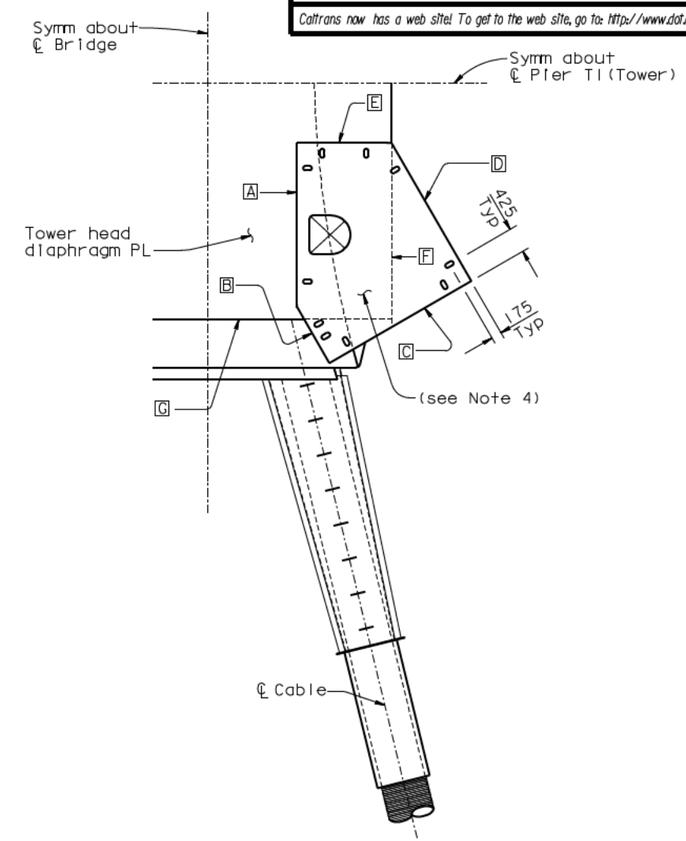

PLAN A-A
1:50
Padeye Layout at Tower Top Plate (see Note 1)

LEGEND:

A Tower head PL designation

0 Padeye

NOTES:

1. Padeye locations shall be shifted to avoid conflict with tower fog light, boom assembly, outrigger and submitted for approval by the Engineer.
2. Padeye 3 pin configuration shall be located at tower head plate A, B, C, D and E.
3. For padeye pin configuration details, see "Tower Access Details No. 22" sheet.
4. For other tower head padeyes, see "Tower Access Details No. 13" sheet.
5. For padeye layouts on tower shafts, see "Tower Access Details No. 17" sheet.
6. For padeye typical detail and design force, see "Girder Access Details No. 10" sheet.

PADEYE LAYOUT AT TOWER HEAD
(For clarity only the pad eyes on tower head PL C are shown)

MARK	DATE	DESCRIPTIONS	BY	CH'D	CCO#
1	06/22/07	WELDED PADEYES	NV	MN	41

REVISIONS

CONTRACT CHANGE ORDER NO. ____
SHEET ___ OF ___

ALL DIMENSIONS ARE IN MILLIMETERS UNLESS OTHERWISE SHOWN

R. Valizadeh/V. Toan/Y.L./W.L./F.C.
DESIGN OVERSIGHT
Roya Valizadeh / Vong P. Ban / Y. Liu
SIGN OFF DATE 06/22/07

	BY	CHECKED
DESIGN	M. Nader	N. Vo
DETAILS	L. Rus	D. Harrison
QUANTITIES	L. Rus	D. Harrison

PREPARED FOR THE STATE OF CALIFORNIA DEPARTMENT OF TRANSPORTATION

R. Manzanarez
PROJECT ENGINEER

BRIDGE NO. 34-0006L/R
KILOMETER POST 13.2/13.9

SAN FRANCISCO OAKLAND BAY BRIDGE
EAST SPAN SEISMIC SAFETY PROJECT
SELF-ANCHORED SUSPENSION BRIDGE
(SUPERSTRUCTURE & TOWER)

TOWER ACCESS DETAILS NO. 18

Rev. Date: 5-18-98

ORIGINAL SCALE IN MILLIMETERS FOR REDUCED PLANS 0 10 20 30 40 50 60 70 80 90 100

CU 04
EA 0120F1

DISREGARD PRINTS BEARING EARLIER REVISION DATES 04/08/02 07/01/02 12/19/02

SHEET 517R1 OF

FILE -> L:\BB\04-012001\SAS\Contract Plans and CCO\CCO\In Progress\CCO#41\DGN\akacc18.dgn

100% PS&E

USERNAME => vignatovs DATE PLOTTED => 03 JUL 2007 TIME PLOTTED => 10:56:34

MARK	DATE	DESCRIPTIONS	BY	CH'D	CCO#
1	06/22/07	WELDED PADEYES	NV	MN	41

REVISIONS

CONTRACT CHANGE ORDER NO. ____
SHEET ___ OF ___

DIST.	COUNTY	ROUTE	KILOMETER POST TOTAL PROJECT	SHEET NO.	TOTAL SHEETS
04	SF	80	13.2/13.9	935R1	1204

REGISTERED ENGINEER - CIVIL
12-6-04
PLANS APPROVAL DATE

REGISTERED PROFESSIONAL ENGINEER Marwan N. Nader No. C 054426 Exp. 12/31/07 CIVIL STATE OF CALIFORNIA

The State of California or its officers or agents shall not be responsible for the accuracy or completeness of electronic copies of this plan sheet.

T.Y. LIN / MOFFATT & NICHOL
825 BATTERY STREET
SAN FRANCISCO, CA 94111

Caltrans now has a web site! To get to the web site, go to: http://www.dot.ca.gov

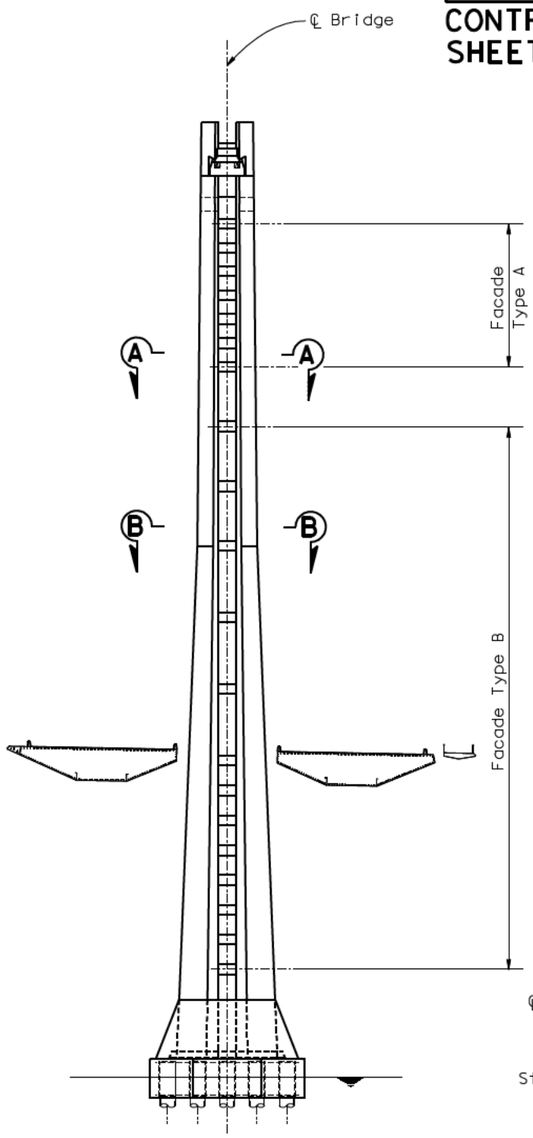

KEY ELEVATION
1:500

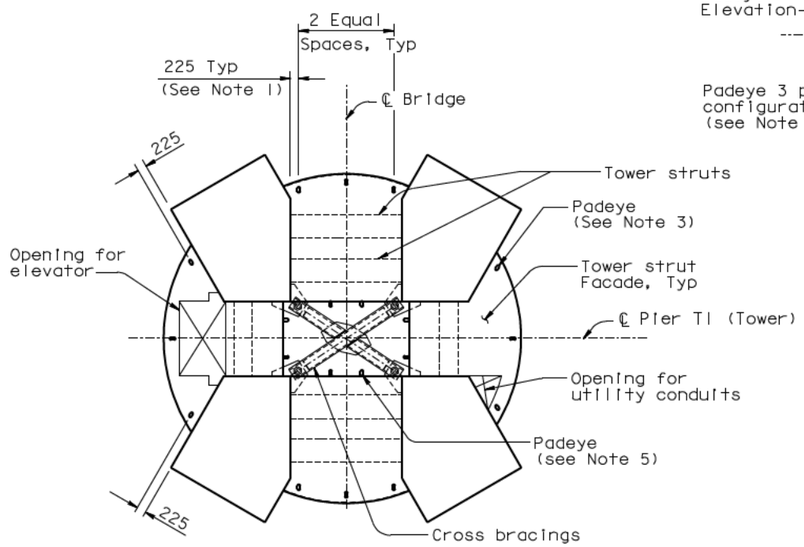

SECTION A-A
1:80
Strut Facade Type A

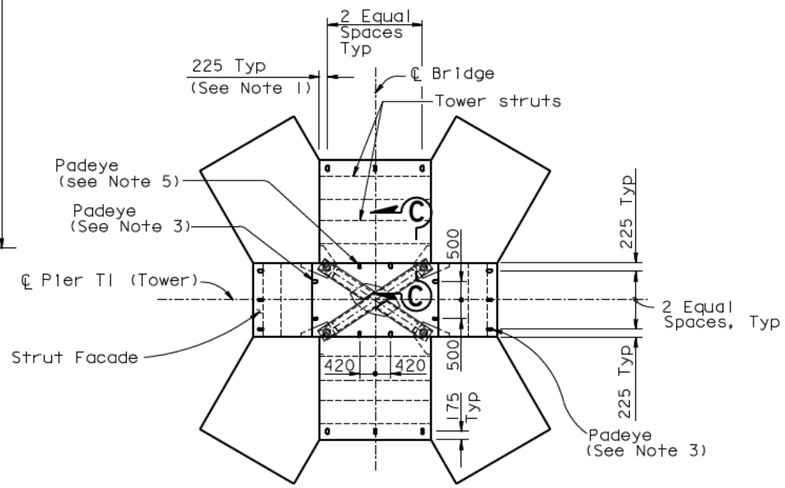

SECTION B-B
1:80
Strut Facade Type B

PADEYE LAYOUT AT TOWER STRUT FACADES

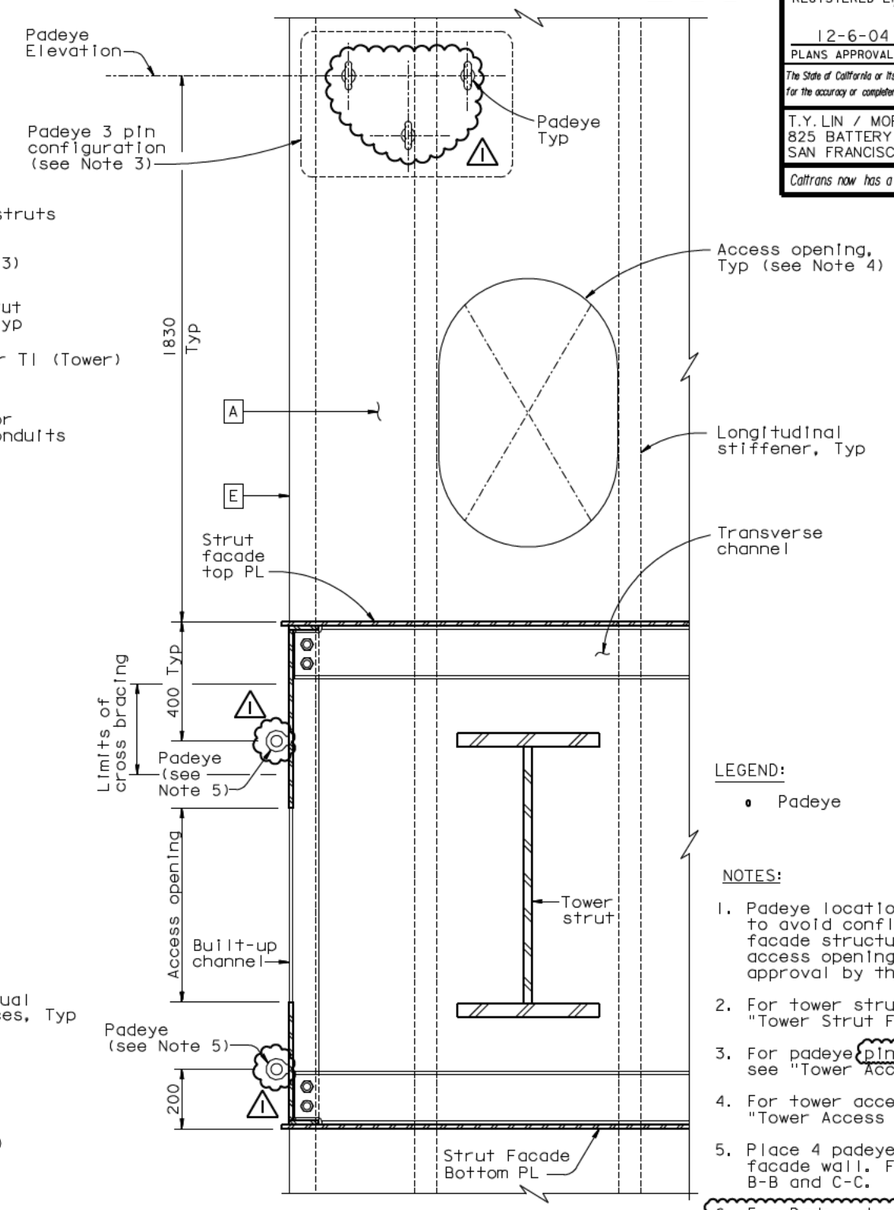

SECTION C-C
1:10
Tower cross bracings not shown for clarity

LEGEND:

- Padeye

NOTES:

1. Padeye locations shall be shifted to avoid conflict with tower strut facade structural components and access openings and submitted for approval by the Engineer.
2. For tower strut facade details, see "Tower Strut Facade Details" sheets.
3. For padeye pin configuration details, see "Tower Access Details No. 22" sheet.
4. For tower access opening details, see "Tower Access Details No. 4" sheet.
5. Place 4 padeyes on each inbound strut facade wall. For locations see sections B-B and C-C.
6. For Padeye typical details and design force, see "Girder Access Details No. 10" sheet.

ALL DIMENSIONS ARE IN MILLIMETERS UNLESS OTHERWISE SHOWN

100 % PS&E

DATE PLOTTED => 29 JUN 2007 TIME PLOTTED => 10:07:54

USERNAME => pthom

R. Valizadeh/V. Toan/Y.L./W.L./F.C.
DESIGN OVERSIGHT
Roya Valizadeh / Vong Toan / Y. Liu
SIGN OFF DATE 06/22/07

DESIGN	BY M. Nader	CHECKED N. Vo	
DETAILS	BY L. Rus	CHECKED D. Harrison	
QUANTITIES	BY L. Rus	CHECKED D. Harrison	

PREPARED FOR THE STATE OF CALIFORNIA DEPARTMENT OF TRANSPORTATION

R. Manzanarez
PROJECT ENGINEER

BRIDGE NO. 34-0006L/R
KILOMETER POST 13.2/13.9

SAN FRANCISCO OAKLAND BAY BRIDGE
EAST SPAN SEISMIC SAFETY PROJECT
SELF-ANCHORED SUSPENSION BRIDGE
(SUPERSTRUCTURE & TOWER)

TOWER ACCESS DETAILS NO. 19

Rev. Date: 5-18-98

ORIGINAL SCALE IN MILLIMETERS FOR REDUCED PLANS 0 10 20 30 40 50 60 70 80 90 100

CU 04
EA 0120F1

DISREGARD PRINTS BEARING EARLIER REVISION DATES

REVISION DATES (PRELIMINARY STAGE ONLY) 04/08/02 07/09/02 12/19/02

SHEET 518R1 OF

FILE -> I:\bb\04-012001\sas\contract plans and cco\cco\in progress\cco#41\dgn\akacc19.dgn

Caltrans now has a web site! To get to the web site, go to: http://www.dot.ca.gov

DIST.	COUNTY	ROUTE	KILOMETER POST TOTAL PROJECT	SHEET NO.	TOTAL SHEETS
04	SF	80	13.2/13.9	936R1	1204

REGISTERED ENGINEER - CIVIL

12-6-04
PLANS APPROVAL DATE

REGISTERED PROFESSIONAL ENGINEER Marwan N. Nader No. C 054426 Exp. 12/31/07 CIVIL STATE OF CALIFORNIA

The State of California or its officers or agents shall not be responsible for the accuracy or completeness of electronic copies of this plan sheet.

T.Y. LIN / MOFFATT & NICHOL
825 BATTERY STREET
SAN FRANCISCO, CA 94111

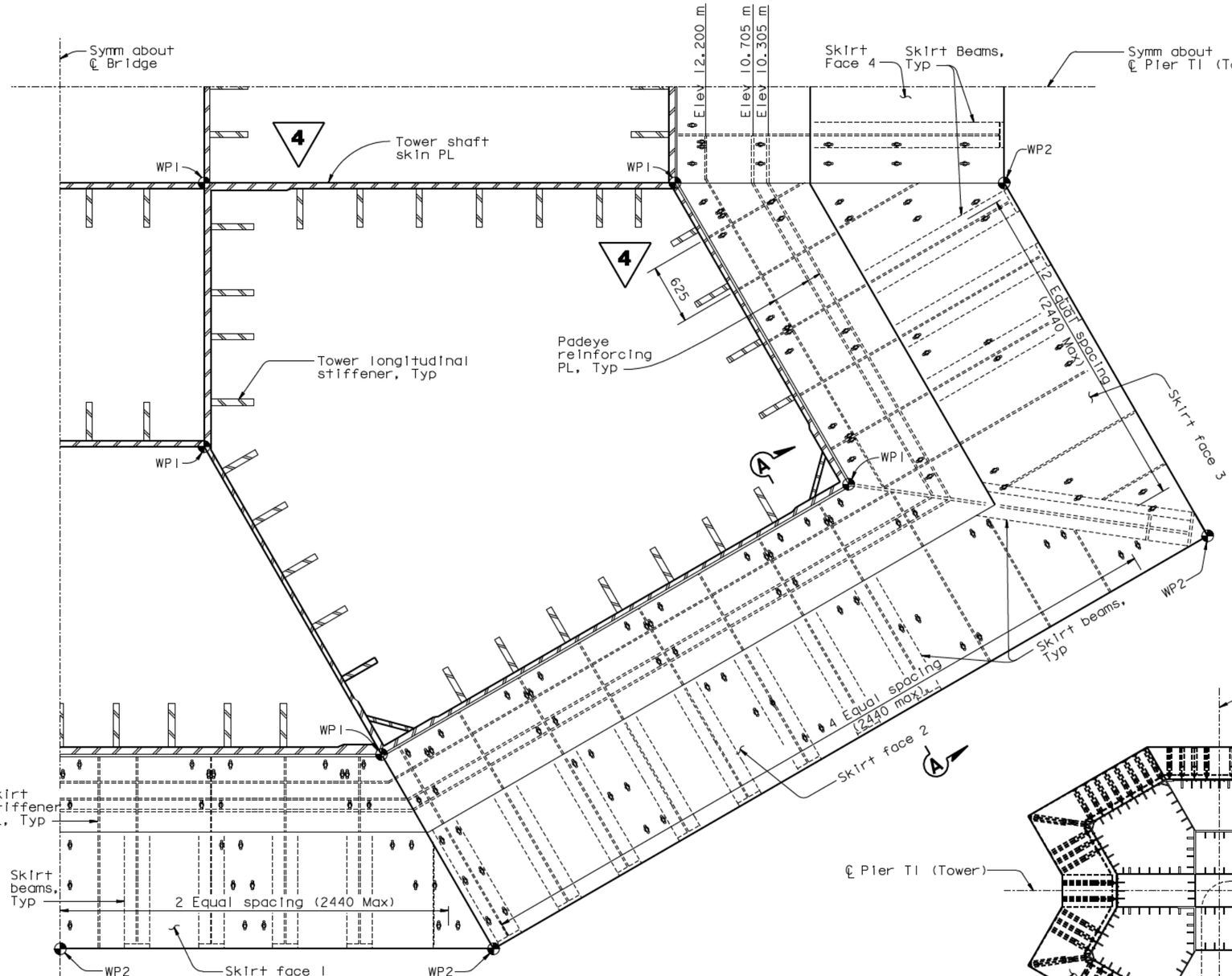

DETAIL A
1:25

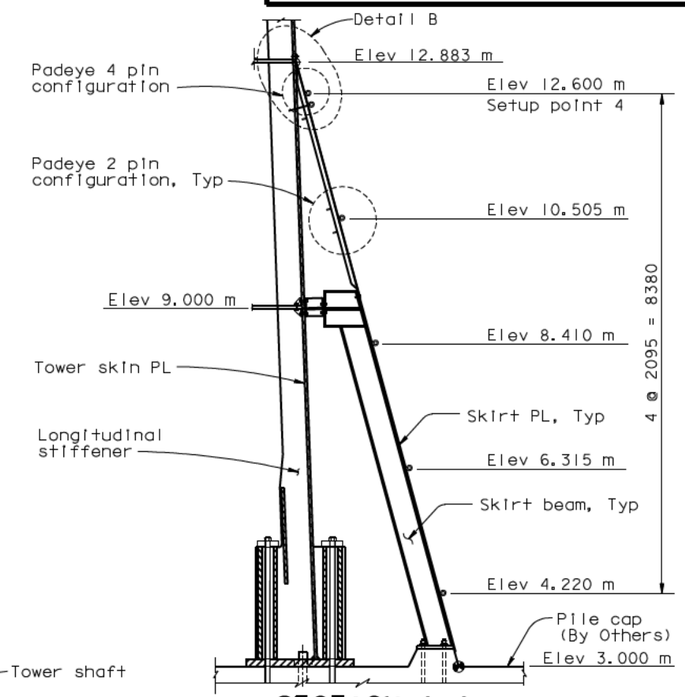

SECTION A-A
1:50

(Padeye NTS and they are shown for clarity)

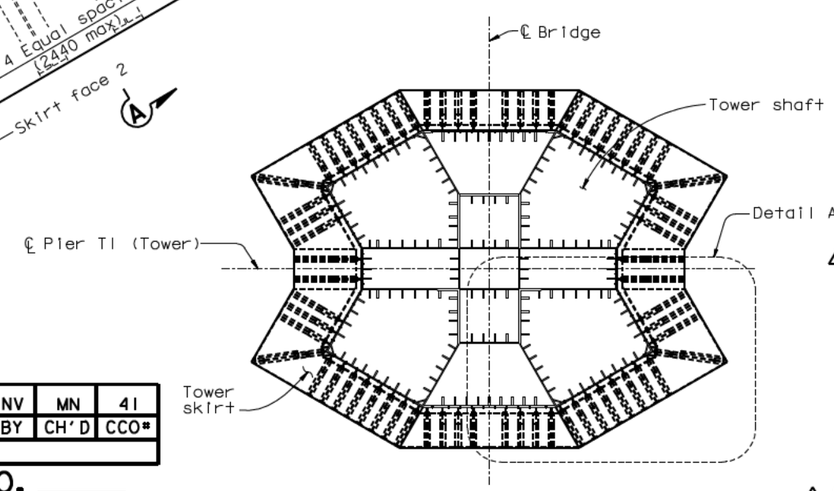

PLAN VIEW @ Elev 13.000 m
1:150

LEGEND:

- Padeye
- WP1 Tower shaft working point
- WP2 Tower skirt working point

NOTES:

1. For Detail B, see "Tower Access Details No. 21" sheet.
2. For details not shown, see "Tower Skirt Details" sheets.
3. For Padeye typical detail and design force, see "Girder Access Details No. 10" sheet.
4. For Padeye pin configuration details, see "Tower Access Details No. 22" sheet.

MARK	DATE	DESCRIPTIONS	BY	CH'D	CCO#
1	06/22/07	WELDED PADEYES	NV	MN	41

REVISIONS

CONTRACT CHANGE ORDER NO. ____
SHEET ___ OF ___

4 REVISED PER ADDENDUM NO. 4 DATED DECEMBER 9, 2005

PADEYE LAYOUT AT TOWER SKIRT

ALL DIMENSIONS ARE IN MILLIMETERS UNLESS OTHERWISE SHOWN

SAN FRANCISCO OAKLAND BAY BRIDGE
EAST SPAN SEISMIC SAFETY PROJECT
SELF-ANCHORED SUSPENSION BRIDGE
(SUPERSTRUCTURE & TOWER)

TOWER ACCESS DETAILS NO. 20

R. Vaziadeh/V. Toan/Y.L./W.L./F.C.
DESIGN OVERSIGHT
SIGN OFF DATE 06/22/07

	BY	CHECKED
DESIGN	M. Nader	N. Vo
DETAILS	L. Rus	D. Harrison
QUANTITIES	L. Rus	D. Harrison

PREPARED FOR THE STATE OF CALIFORNIA DEPARTMENT OF TRANSPORTATION

R. Manzanarez
PROJECT ENGINEER

BRIDGE NO. 34-0006L/R
KILOMETER POST 13.2/13.9

CU 04
EA 0120F1

Rev. Date: 5-18-98

ORIGINAL SCALE IN MILLIMETERS FOR REDUCED PLANS 0 10 20 30 40 50 60 70 80 90 100

DISREGARD PRINTS BEARING EARLIER REVISION DATES

REVISION DATES (PRELIMINARY STAGE ONLY): 04/08/02 07/01/02 12/19/02 07/18/03 11/13/05

SHEET 519R1 OF

FILE -> I:\bb\04-012001\sas\contract plans and cco\cco\in progress\cco#41\dgn\akacc20.dgn

USERNAME => ptom DATE PLOTTED => 29 JUN 2007 TIME PLOTTED => 10:09:34

100% PS&E

DIST.	COUNTY	ROUTE	KILOMETER POST TOTAL PROJECT	SHEET NO.	TOTAL SHEETS
04	SF	80	13.2/13.9	937R1	1204

Caltrans Metric

REGISTERED ENGINEER - CIVIL

12-6-04
PLANS APPROVAL DATE

REGISTERED PROFESSIONAL ENGINEER Marwan N. Nader No. C 054426 Exp. 12/31/07 CIVIL STATE OF CALIFORNIA

The State of California or its officers or agents shall not be responsible for the accuracy or completeness of electronic copies of this plan sheet.

T.Y. LIN / MOFFATT & NICHOL
825 BATTERY STREET
SAN FRANCISCO, CA 94111

Caltrans now has a web site! To get to the web site, go to: http://www.dot.ca.gov

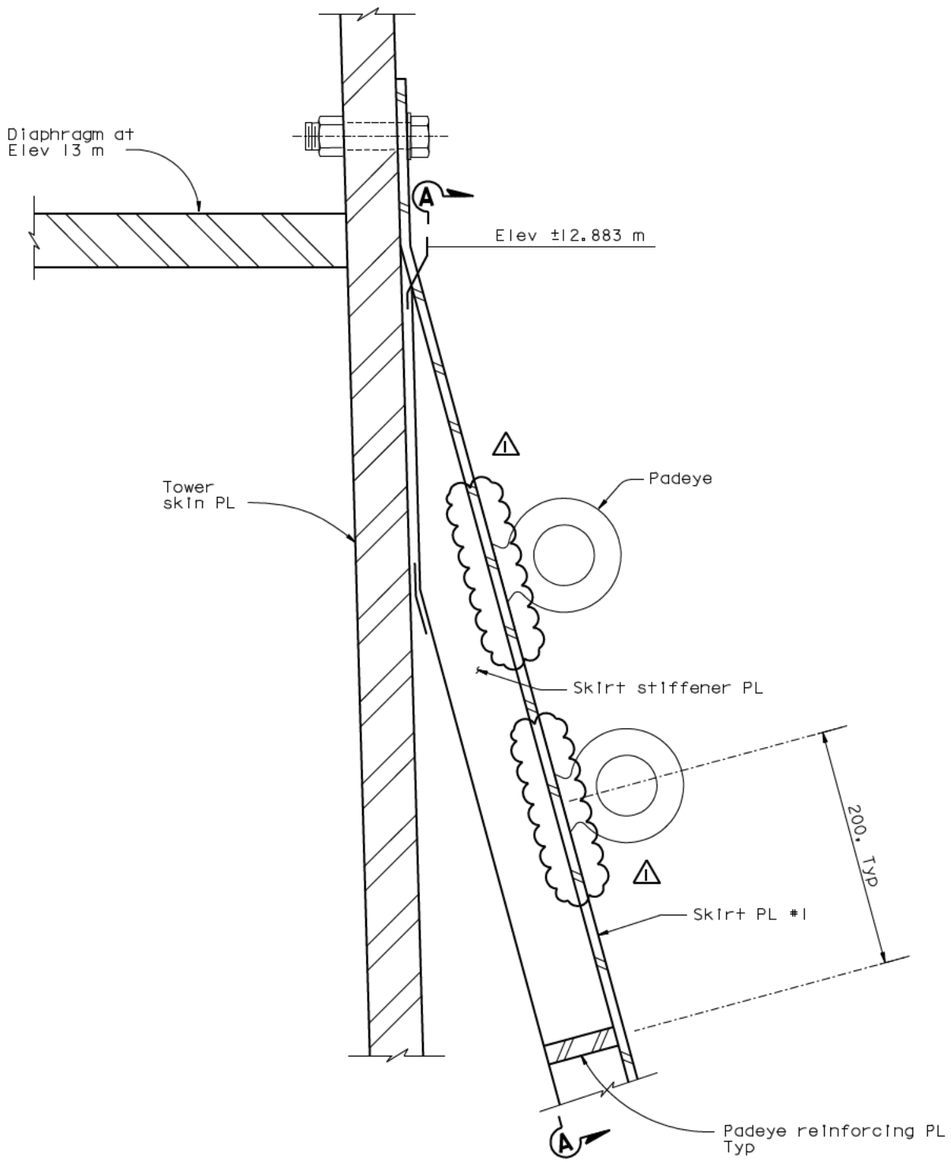

DETAIL B
1:2.5
(Longitudinal stiffener not shown for clarity)

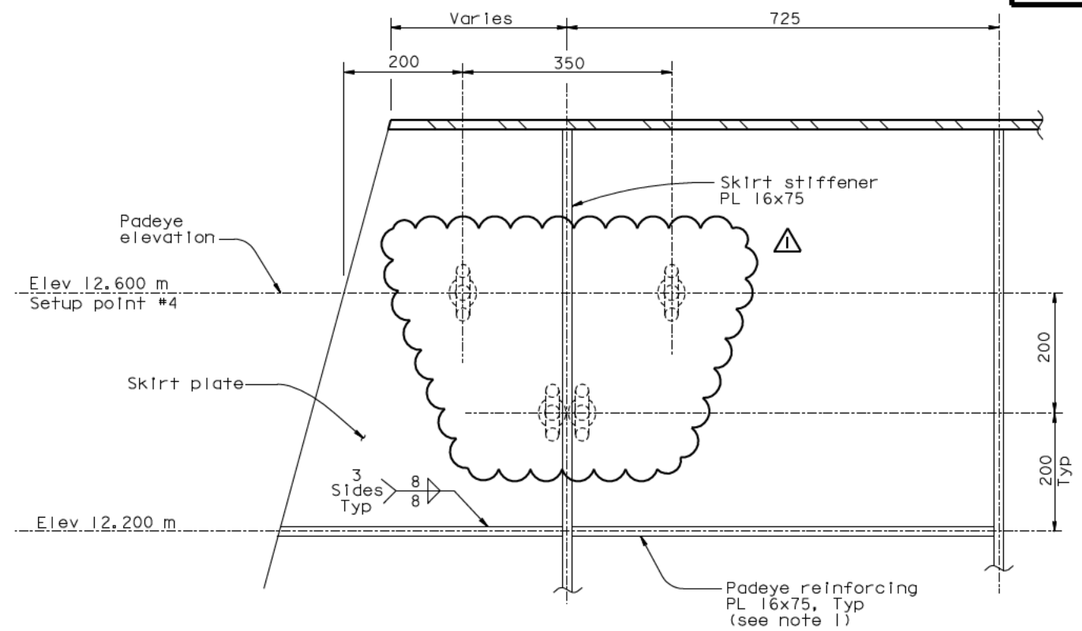

SECTION A-A
1:5
(Diaphragm at Elev 13 m and tower shaft skin PL not shown for clarity)

MARK	DATE	DESCRIPTIONS	BY	CH'D	CCO#
1	06/22/07	WELDED PADEYES	NV	MN	41

REVISIONS

CONTRACT CHANGE ORDER NO. _____
SHEET ___ OF ___

Notes:

1. For location of padeye reinforcing plates, see "Tower Access Details No. 20" sheet.

ALL DIMENSIONS ARE IN MILLIMETERS UNLESS OTHERWISE SHOWN

R. Valizadeh/V. Toan/Y.L./W.L./F.C.
DESIGN OVERSIGHT
Roya Valizadeh / Vong Toan / Y. Liu
SIGN OFF DATE 06/22/07

	BY	CHECKED
DESIGN	M. Nader	N. Vo
DETAILS	S. Hamoud	D. Harrison
QUANTITIES	S. Hamoud	D. Harrison

PREPARED FOR THE STATE OF CALIFORNIA DEPARTMENT OF TRANSPORTATION

R. Manzanarez
PROJECT ENGINEER

BRIDGE NO. 34-0006L/R
KILOMETER POST 13.2/13.9

SAN FRANCISCO OAKLAND BAY BRIDGE
EAST SPAN SEISMIC SAFETY PROJECT
SELF-ANCHORED SUSPENSION BRIDGE
(SUPERSTRUCTURE & TOWER)

TOWER ACCESS DETAILS NO. 21

Rev. Date: 5-18-98

ORIGINAL SCALE IN MILLIMETERS FOR REDUCED PLANS 0 10 20 30 40 50 60 70 80 90 100

CU 04
EA 0120F1

DISREGARD PRINTS BEARING EARLIER REVISION DATES

REVISION DATES (PRELIMINARY STAGE ONLY) 04/08/02 07/01/02 12/19/02

SHEET 520R1 OF

FILE -> L:\BB\04-0120F1\SAS\Contract Plans and CCO\CCO\In Progress\CCO#41\DGN\akacc21.dgn

100% PS&E

USERNAME => vigmatovsk DATE PLOTTED => 03 JUL 2007 TIME PLOTTED => 09:16:00

DIST.	COUNTY	ROUTE	KILOMETER POST TOTAL PROJECT	SHEET NO.	TOTAL SHEETS
04	SF	80	13.2/13.9	938R3	1204

REGISTERED ENGINEER - CIVIL

12-6-04
PLANS APPROVAL DATE

REGISTERED PROFESSIONAL ENGINEER Marwan N. Nader No. C 054426 Exp. 12/31/09 CIVIL STATE OF CALIFORNIA

The State of California or its officers or agents shall not be responsible for the accuracy or completeness of electronic copies of this plan sheet.

T.Y. LIN / MOFFATT & NICHOL
825 BATTERY STREET
SAN FRANCISCO, CA 94111

Caltrans now has a web site! To get to the web site, go to: http://www.dot.ca.gov

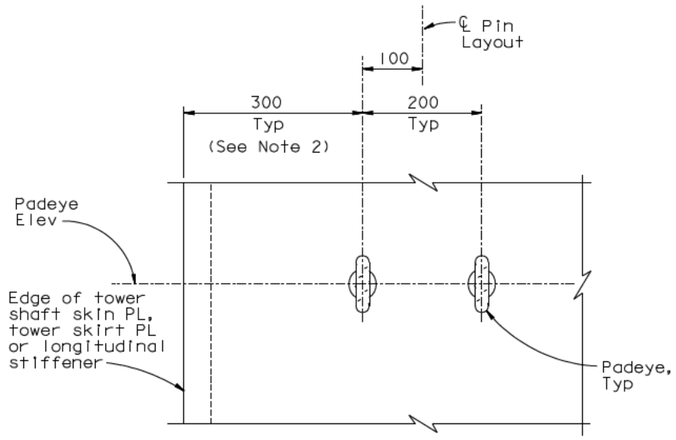

2 PIN CONFIGURATION
1:5

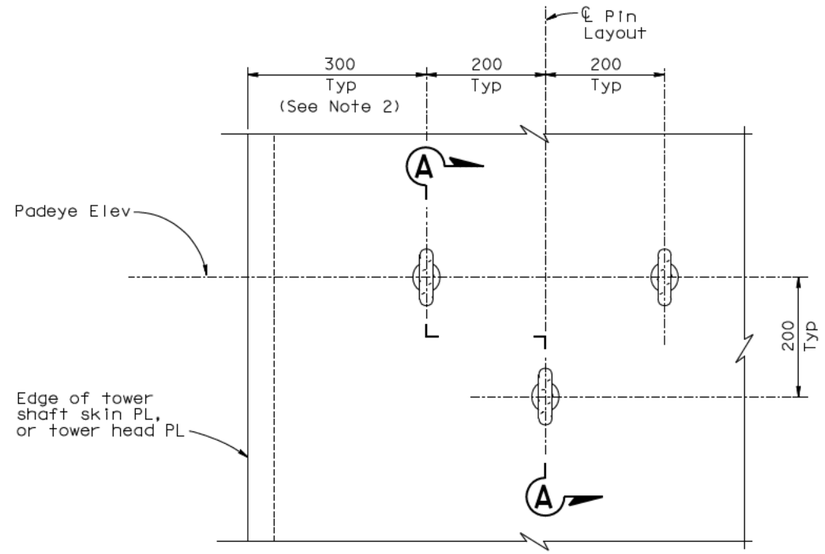

3 PIN CONFIGURATION
1:5

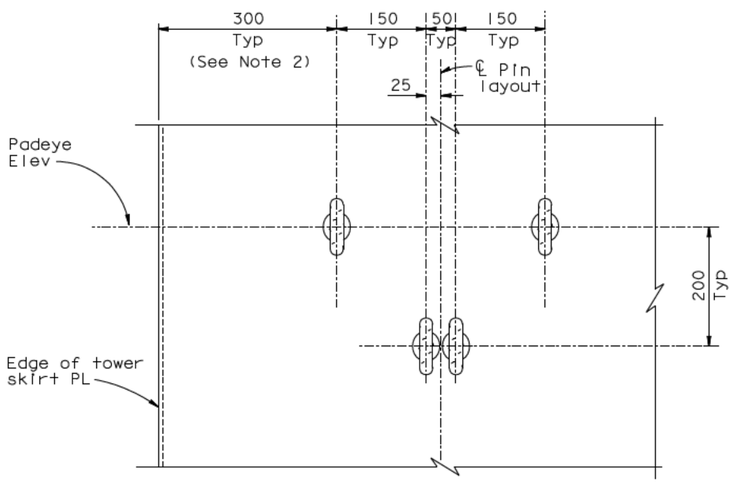

4 PIN CONFIGURATION
1:5

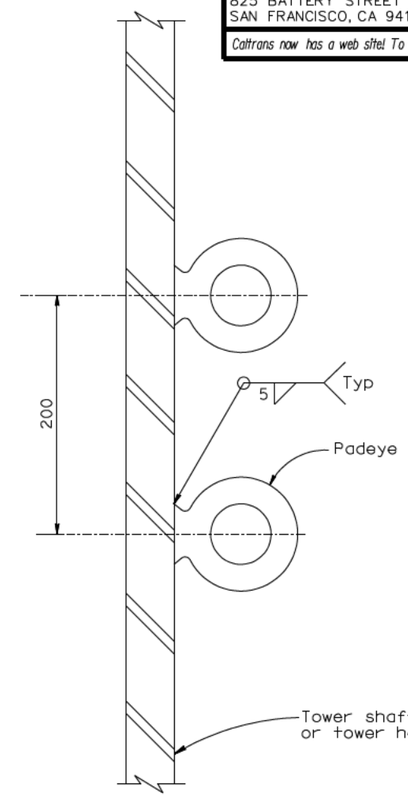

SECTION A-A
1:2.5

PADEYE CONFIGURATION

NOTES:

1. For Padeye typical details and design force, see "Girder Access Details No.10" sheet.
2. At corner DE of skin plate D of the southwest shaft, distance from edge to pin configuration shall be increased from 300 mm to 700 mm to provide clearance for mechanical piping.
3. (3) Padeyes on tower skin plate D of the north and west shaft near the D-E corner that are in the path of elevator support attachments may be removed.

CONTRACT CHANGE ORDER NO. ____
SHEET ___ OF ___

REQUESTS FOR INFORMATION NOT ADDRESSED IN THIS CCO REMAIN IN FORCE

MARK	DATE	DESCRIPTIONS	BY	CH'D	CCO#
3	03/27/09	PADEYE MODIFICATIONS	NV	MN	41
2	02/12/08	PADEYE MODIFICATIONS	NV	MN	41
1	06/22/07	WELDED PADEYES	NV	MN	41

REVISIONS

R. Vallizadeh/V. Toan/Y.L./W.L./F.C.
DESIGN OVERSIGHT
SIGN OFF DATE 03/27/09

Rev. Date: 5-18-98

DESIGN	BY M. Nader	CHECKED N. Vo	
DETAILS	BY L. Rus	CHECKED D. Harrison	
QUANTITIES	BY L. Rus	CHECKED D. Harrison	

PREPARED FOR THE STATE OF CALIFORNIA DEPARTMENT OF TRANSPORTATION

ALL DIMENSIONS ARE IN MILLIMETERS UNLESS OTHERWISE SHOWN

ORIGINAL SCALE IN MILLIMETERS FOR REDUCED PLANS 0 10 20 30 40 50 60 70 80 90 100

R. Manzanarez
PROJECT ENGINEER

CU 04
EA 0120F1

BRIDGE NO. 34-0006L/R
KILOMETER POST 13.2/13.9

DISREGARD PRINTS BEARING EARLIER REVISION DATES 05/24/01 04/08/02 07/01/02 12/19/02

SAN FRANCISCO OAKLAND BAY BRIDGE
EAST SPAN SEISMIC SAFETY PROJECT
SELF-ANCHORED SUSPENSION BRIDGE
(SUPERSTRUCTURE & TOWER)

TOWER ACCESS DETAILS NO.22

SHEET 52IR3 OF

FILE -> I:\bb\04-012001\sas\contract plans and cco\cco\cco#41\revision 03-27-09\dgn\akacc22.dgn

USERNAME => cwinrow DATE PLOTTED => 27 MAR 2009 TIME PLOTTED => 16:48:35

100% PS&E

DIST.	COUNTY	ROUTE	KILOMETER POST TOTAL PROJECT	SHEET NO.	TOTAL SHEETS
04	SF	80	13.2/13.9	944R1	1204

REGISTERED ENGINEER - CIVIL

12-6-04
PLANS APPROVAL DATE

REGISTERED PROFESSIONAL ENGINEER Marwan N. Nader No. C 054426 Exp. 12/31/09 CIVIL STATE OF CALIFORNIA

The State of California or its officers or agents shall not be responsible for the accuracy or completeness of electronic copies of this plan sheet.

T.Y. LIN / MOFFATT & NICHOL
825 BATTERY STREET
SAN FRANCISCO, CA 94111

Caltrans now has a web site! To get to the web site, go to: http://www.dot.ca.gov

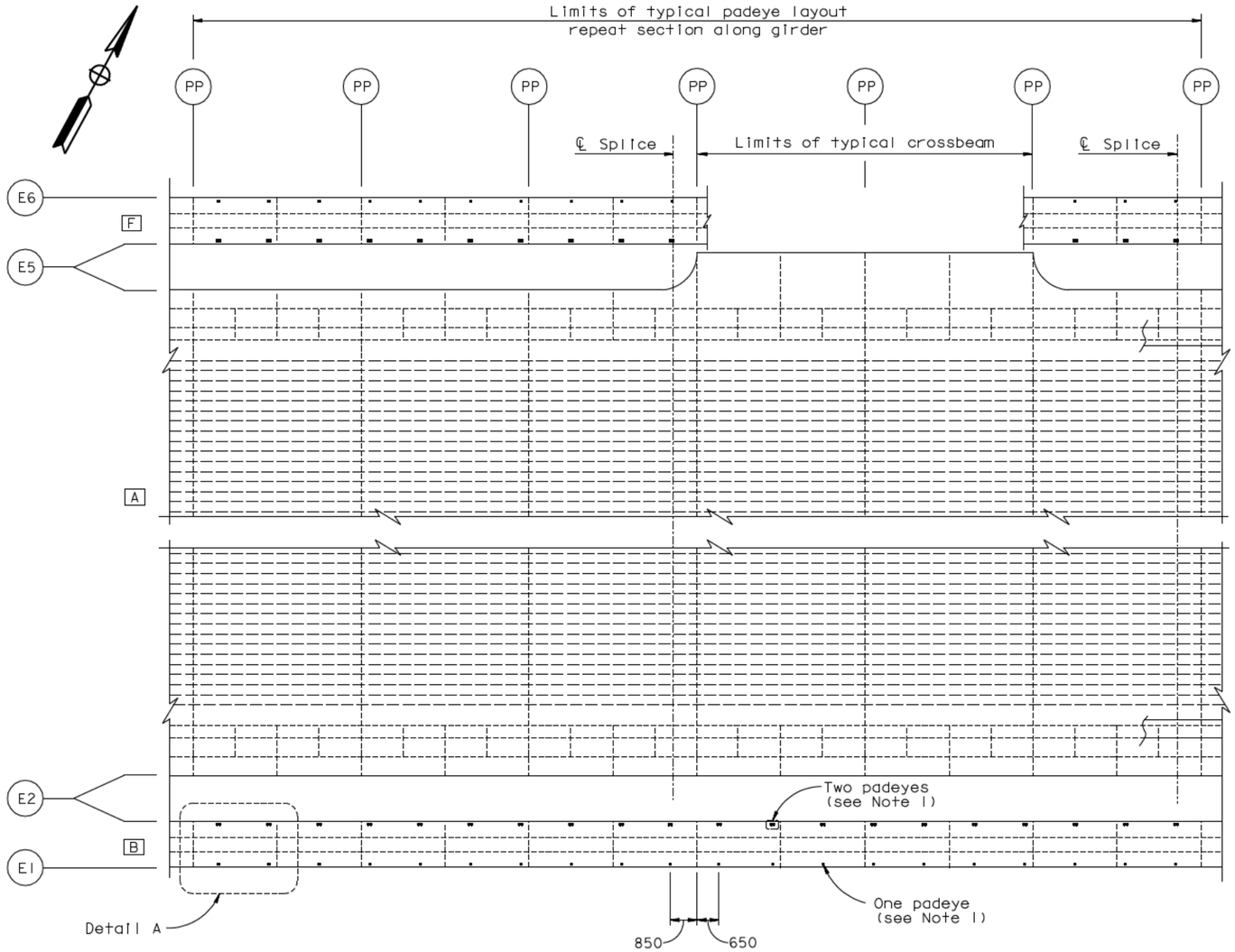

TYPICAL GIRDER ACCESS LAYOUT

("E" Line shown, "W" Line similar, except at counterweight (see Note 3)

1:80

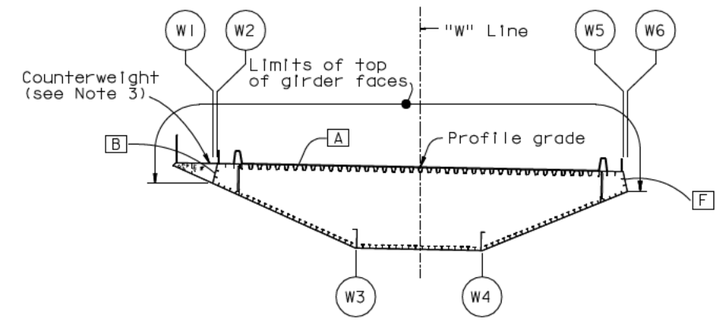

"W" LINE

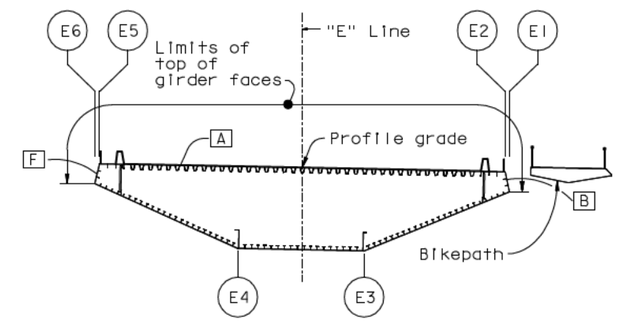

"E" LINE

KEY CROSS SECTIONS

1:200

NOTES:

1. For Detail A and padeye details, see "Girder Access Details No.10" sheet.
2. For girder framing and layout, see "Girder Framing Details No.1" sheet.
3. For padeye locations on counterweight, see "Girder Access Details No.9" sheet.
4. Eliminate the detailed padeyes on the box girder, including the bikepath and the counterweights, unless directed otherwise by the Engineer.

CONTRACT CHANGE ORDER NO. ____
SHEET ___ OF ___

REQUESTS FOR INFORMATION NOT ADDRESSED IN THIS CCO REMAIN IN FORCE

ALL DIMENSIONS ARE IN MILLIMETERS UNLESS OTHERWISE SHOWN

R. Valizadeh/V. Toan/Y.L./W.L./F.C.
DESIGN OVERSIGHT
SIGN OFF DATE 05/01/09

MARK	DATE	DESCRIPTIONS	BY	CH'D	CCO#
1	05/01/09	PADEYE MODIFICATIONS	GB	MN	41

REVISIONS

	BY	CHECKED
DESIGN	M. Nader	N. Vo
DETAILS	M. Roberts	N. Vo
QUANTITIES	M. Roberts	N. Vo

PREPARED FOR THE STATE OF CALIFORNIA DEPARTMENT OF TRANSPORTATION

R. Manzanarez
PROJECT ENGINEER

BRIDGE NO. 34-0006L/R
KILOMETER POST 13.2/13.9

SAN FRANCISCO OAKLAND BAY BRIDGE
EAST SPAN SEISMIC SAFETY PROJECT
SELF-ANCHORED SUSPENSION BRIDGE (SUPERSTRUCTURE & TOWER)

GIRDER ACCESS DETAILS NO. 4

Rev. Date: 5-18-98

ORIGINAL SCALE IN MILLIMETERS FOR REDUCED PLANS 0 10 20 30 40 50 60 70 80 90 100

CU 04
EA 0120F1

DISREGARD PRINTS BEARING EARLIER REVISION DATES

REVISION DATES (PRELIMINARY STAGE ONLY) 04/08/02 07/01/02 12/19/02

SHEET 527R1 OF

FILE -> I:\bb\04-012001\sas\contract plans and cco\cco\cco#41\6-update 05-01-09\dgn\akacc04b.dgn

100% PS&E

USERNAME => dwinrow DATE PLOTTED => 01 MAY 2009 TIME PLOTTED => 09:10:39

DIST.	COUNTY	ROUTE	KILOMETER POST TOTAL PROJECT	SHEET NO.	TOTAL SHEETS
04	SF	80	13.2/13.9	945R1	1204

REGISTERED ENGINEER - CIVIL

12-6-04
PLANS APPROVAL DATE

REGISTERED PROFESSIONAL ENGINEER Marwan N. Nader No. C 054426 Exp. 12/31/09 CIVIL STATE OF CALIFORNIA

The State of California or its officers or agents shall not be responsible for the accuracy or completeness of electronic copies of this plan sheet.

T.Y. LIN / MOFFATT & NICHOL
825 BATTERY STREET
SAN FRANCISCO, CA 94111

Caltrans now has a web site! To get to the web site, go to: http://www.dot.ca.gov

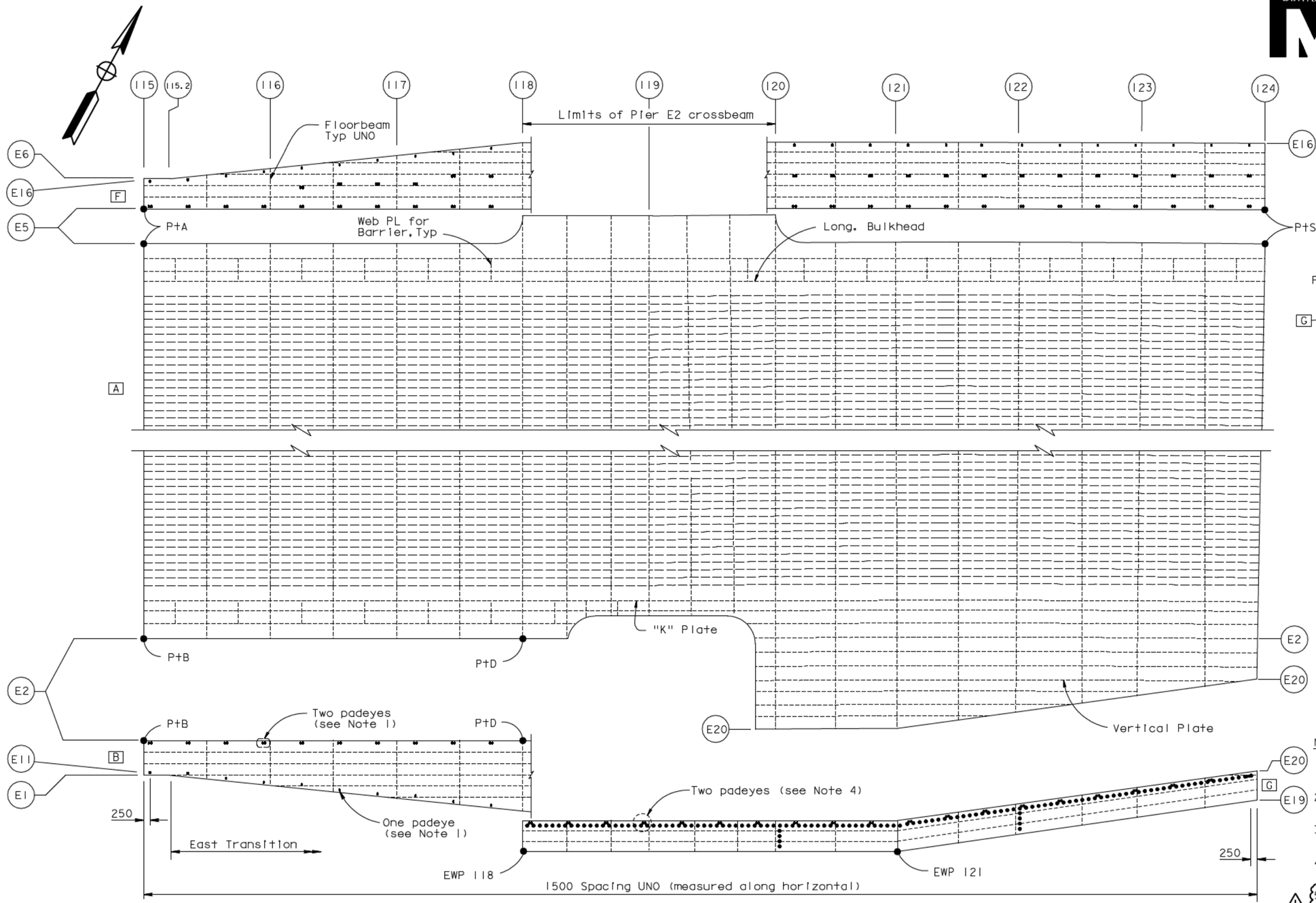

GIRDER ACCESS LAYOUT AT EAST TRANSITION

1:80

("E" Line shown, "W" Line similar)

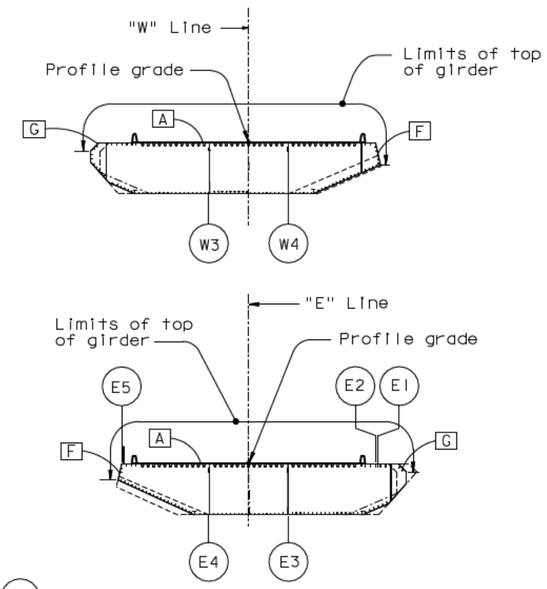

KEY CROSS SECTIONS

1:400

NOTES:

1. For padeye details, see "Girder Access Details No. 10" sheet.
2. For girder framing and layout, see "Girder At East Transition No. 11" sheet.
3. Intermediate padeye sets are located at 50 mm from nearest shown stiffener.
4. For padeyes at architectural splice, see "Girder Access Details No. 10" sheet.
5. Eliminate the detailed padeyes on the box girder, including the bikepath and the counterweights, unless directed otherwise by the Engineer.

CONTRACT CHANGE ORDER NO. ____
SHEET ___ OF ___

REQUESTS FOR INFORMATION NOT ADDRESSED IN THIS CCO REMAIN IN FORCE

ALL DIMENSIONS ARE IN MILLIMETERS UNLESS OTHERWISE SHOWN

R. Valizadeh/V. Toan/Y.L./W.L./F.C.
DESIGN OVERSIGHT
SIGN OFF DATE 05/01/09

MARK	DATE	DESCRIPTIONS	BY	CH'D	CCO#
1	05/01/09	PADEYE MODIFICATIONS	GB	MN	41

REVISIONS

DESIGN	BY M. Nader	CHECKED N. Vo	
DETAILS	BY M. Roberts	CHECKED N. Vo	
QUANTITIES	BY M. Roberts	CHECKED N. Vo	

PREPARED FOR THE STATE OF CALIFORNIA DEPARTMENT OF TRANSPORTATION

R. Manzanarez
PROJECT ENGINEER

BRIDGE NO. 34-0006L/R
KILOMETER POST 13.2/13.9

SAN FRANCISCO OAKLAND BAY BRIDGE
EAST SPAN SEISMIC SAFETY PROJECT
SELF-ANCHORED SUSPENSION BRIDGE
(SUPERSTRUCTURE & TOWER)

GIRDER ACCESS DETAILS NO. 5

Rev. Date: 5-18-98

ORIGINAL SCALE IN MILLIMETERS FOR REDUCED PLANS 0 10 20 30 40 50 60 70 80 90 100

CU 04
EA 0120F1

DISREGARD PRINTS BEARING EARLIER REVISION DATES

REVISION DATES (PRELIMINARY STAGE ONLY) 04/08/02 07/01/02 12/19/02

SHEET 528R1 OF

FILE -> I:\bb\04-01200I\sas\contract plans and cco\cco\cco#41\6-update 05-01-09\dgn\akacc05b.dgn

100% PS&E

USERNAME => dwinrow DATE PLOTTED => 01 MAY 2009 TIME PLOTTED => 09:13:02

DIST.	COUNTY	ROUTE	KILOMETER POST TOTAL PROJECT	SHEET NO.	TOTAL SHEETS
04	SF	80	13.2/13.9	946R1	1204

REGISTERED ENGINEER - CIVIL

12-6-04

PLANS APPROVAL DATE

REGISTERED PROFESSIONAL ENGINEER Marwan N. Nader No. C 054426 Exp. 12/31/09 CIVIL STATE OF CALIFORNIA

The State of California or its officers or agents shall not be responsible for the accuracy or completeness of electronic copies of this plan sheet.

T.Y. LIN / MOFFATT & NICHOL
825 BATTERY STREET
SAN FRANCISCO, CA 94111

Caltrans now has a web site! To get to the web site, go to: http://www.dot.ca.gov

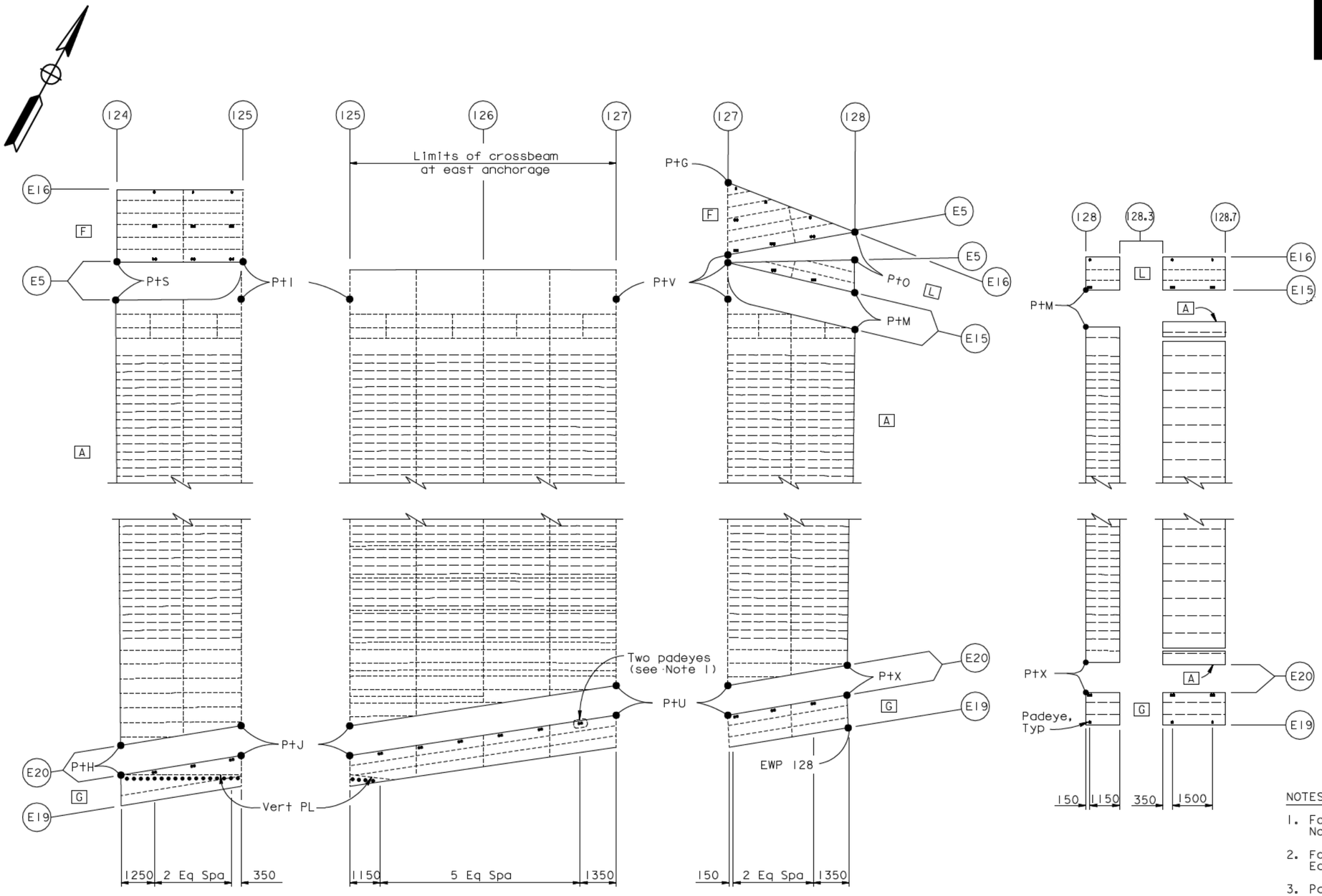

GIRDER ACCESS LAYOUT AT EAST TRANSITION

("E" Line shown, "W" Line similar)

1:80

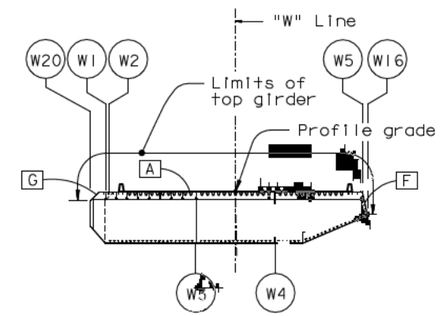

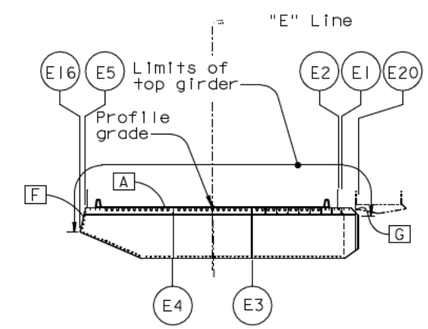

FACE KEY SECTION

1:400

NOTES:

1. For padeye details, see "Girder Access Details No. 10" sheet.
2. For girder framing and layout, see "Girder At East Transition No. 12" sheet.
3. Pairs of pad eyes shall be aligned to be level.
4. For padeyes at architectural splice, see "Girder Access Details No. 10" sheet.
5. Eliminate the detailed padeyes on the box girder, including the bikepath and the counterweights, unless directed otherwise by the Engineer.

CONTRACT CHANGE ORDER NO. ____
SHEET ___ OF ___

REQUESTS FOR INFORMATION NOT ADDRESSED IN THIS CCO REMAIN IN FORCE

ALL DIMENSIONS ARE IN MILLIMETERS UNLESS OTHERWISE SHOWN

MARK	DATE	DESCRIPTIONS	BY	CH'D	CCO#
1	05/01/09	PADEYE MODIFICATIONS	GB	MN	41

REVISIONS

R. Vallzadeh/V. Toan/Y.L./W.L./F.C.
DESIGN OVERSIGHT
SIGN OFF DATE 05/01/09

DESIGN	BY M. Nader	CHECKED N. Vo	
DETAILS	BY M. Roberts	CHECKED N. Vo	
QUANTITIES	BY M. Roberts	CHECKED N. Vo	

PREPARED FOR THE STATE OF CALIFORNIA DEPARTMENT OF TRANSPORTATION

R. Manzanarez
PROJECT ENGINEER

BRIDGE NO. 34-0006L/R
KILOMETER POST 13.2/13.9

SAN FRANCISCO OAKLAND BAY BRIDGE
EAST SPAN SEISMIC SAFETY PROJECT
SELF-ANCHORED SUSPENSION BRIDGE
(SUPERSTRUCTURE & TOWER)

GIRDER ACCESS DETAILS NO. 6

Rev. Date: 5-18-98

ORIGINAL SCALE IN MILLIMETERS FOR REDUCED PLANS 0 10 20 30 40 50 60 70 80 90 100

CU 04
EA 0120F1

DISREGARD PRINTS BEARING EARLIER REVISION DATES

REVISION DATES (PRELIMINARY STAGE ONLY) 04/08/02 07/01/02 12/19/02

SHEET 529R1 OF

FILE -> I:\bb\04-012001\sas\contract plans and cco\cco\cco*41\6-update 05-01-09\dgn\akacc07b.dgn

100 % PS&E

USERNAME => dwinrow DATE PLOTTED => 01 MAY 2009 TIME PLOTTED => 09:14:56

DIST.	COUNTY	ROUTE	KILOMETER POST TOTAL PROJECT	SHEET NO.	TOTAL SHEETS
04	SF	80	13.2/13.9	947R1	1204

REGISTERED ENGINEER - CIVIL

12-6-04
PLANS APPROVAL DATE

REGISTERED PROFESSIONAL ENGINEER Marwan N. Nader No. C 054426 Exp. 12/31/09 CIVIL STATE OF CALIFORNIA

The State of California or its officers or agents shall not be responsible for the accuracy or completeness of electronic copies of this plan sheet.

T.Y. LIN / MOFFATT & NICHOL
825 BATTERY STREET
SAN FRANCISCO, CA 94111

Caltrans now has a web site! To get to the web site, go to: http://www.dot.ca.gov

NOTES:

1. For Detail B, see "Girder Access Details No. 10" sheet.
2. Detail C is similar to Detail B.
3. For girder framing and layout, see "Girder At East Transition No. 13" and "Girder At East Transition No. 14" sheets.
4. Intermediate padeye sets are located at 50 mm from nearest shown stiffener.
5. For Pier E2 rail layout details, see "Girder Access Details No. 11" sheet.
6. △1 Eliminate the detailed padeyes on the box girder, including the bikepath and the counterweights, unless directed otherwise by the Engineer.

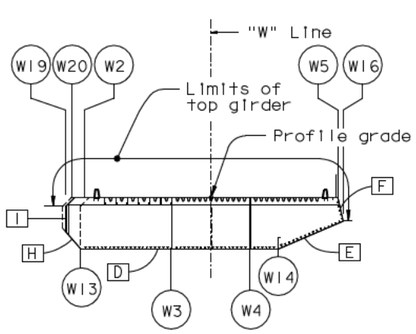

FACE KEY SECTION

1:400

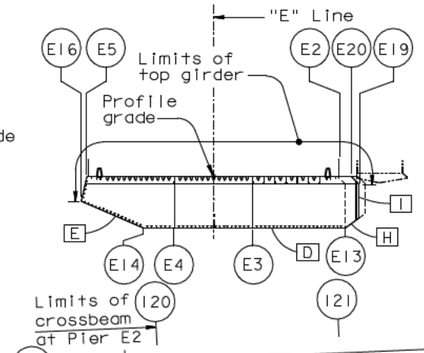

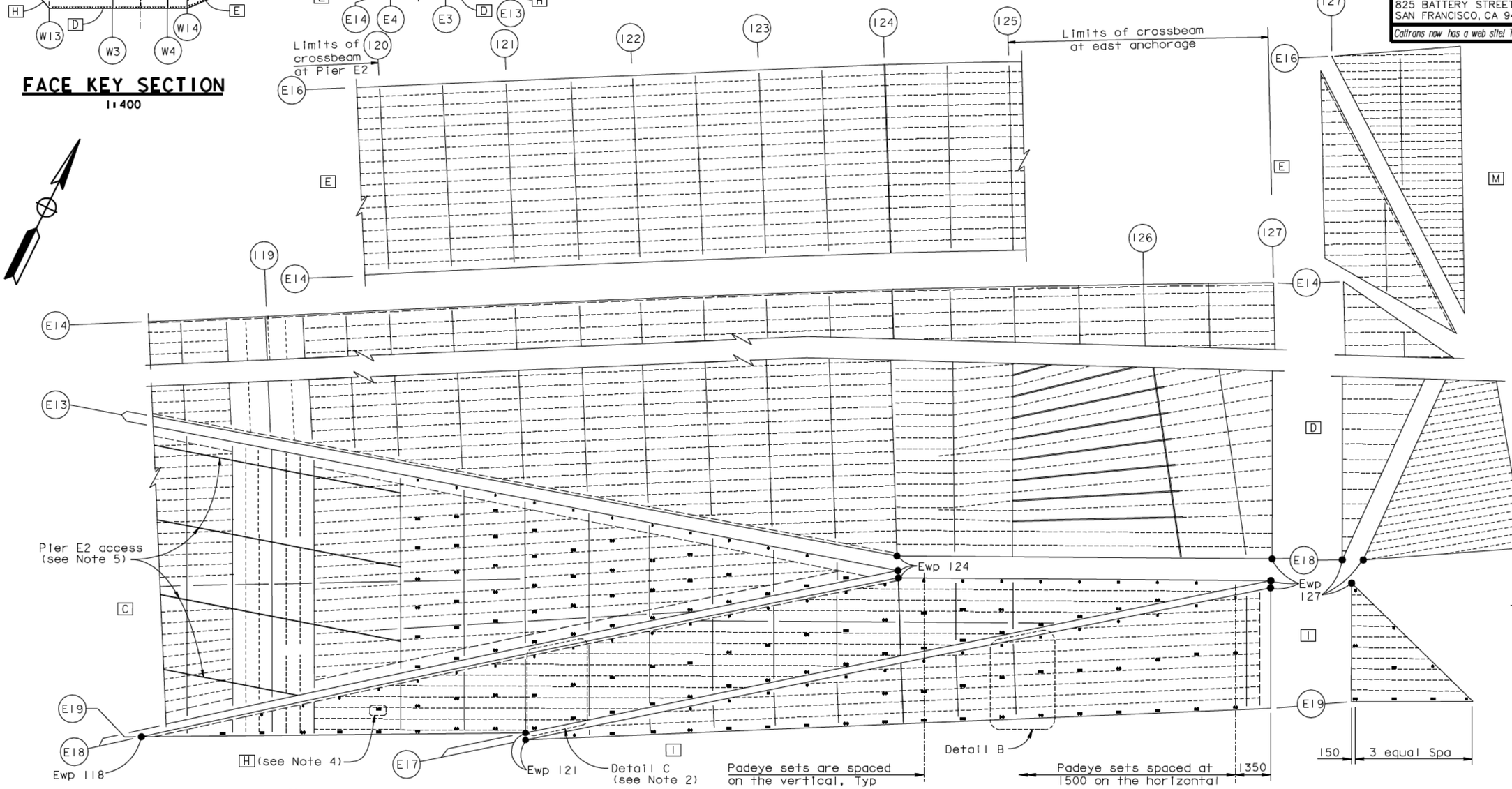

LEGEND:

----- Stiffeners

GIRDER ACCESS LAYOUT AT EAST TRANSITION

("E" Line shown, "W" Line similar)

1:80

ALL DIMENSIONS ARE IN MILLIMETERS UNLESS OTHERWISE SHOWN

CONTRACT CHANGE ORDER NO. ____
SHEET ___ OF ___

REQUESTS FOR INFORMATION NOT ADDRESSED IN THIS CCO REMAIN IN FORCE

R. Vallzadeh/V. Toan/Y.L./W.L./F.C.
DESIGN OVERSIGHT
SIGN OFF DATE 05/01/09

Rev. Date: 5-18-98

MARK	DATE	DESCRIPTIONS	BY	CH'D	CCO#
△1	05/01/09	PADEYE MODIFICATIONS	GB	MN	41

REVISIONS

	BY	CHECKED
DESIGN	M. Nader	N. Vo
DETAILS	M. Roberts	N. Vo
QUANTITIES	M. Robets	N. Vo

PREPARED FOR THE STATE OF CALIFORNIA DEPARTMENT OF TRANSPORTATION

R. Manzanarez
PROJECT ENGINEER

BRIDGE NO. 34-0006L/R
KILOMETER POST 13.2/13.9

SAN FRANCISCO OAKLAND BAY BRIDGE
EAST SPAN SEISMIC SAFETY PROJECT
SELF-ANCHORED SUSPENSION BRIDGE
(SUPERSTRUCTURE & TOWER)

GIRDER ACCESS DETAILS NO. 7

ORIGINAL SCALE IN MILLIMETERS FOR REDUCED PLANS 0 10 20 30 40 50 60 70 80 90 100

CU 04
EA 0120F1

DISREGARD PRINTS BEARING EARLIER REVISION DATES → 04/08/02 07/01/02 12/19/02

REVISION DATES (PRELIMINARY STAGE ONLY)

SHEET 530R1 OF

FILE -> I:\bb\04-012001\sas\contract plans and cco\cco\cco#41\6-update 05-01-09\dgn\akacc06b.dgn

100 % PS&E

USERNAME => cwinrow DATE PLOTTED => 01 MAY 2009 TIME PLOTTED => 09:15:48

DIST.	COUNTY	ROUTE	KILOMETER POST TOTAL PROJECT	SHEET NO.	TOTAL SHEETS
04	SF	80	13.2/13.9	948R2	1204

REGISTERED ENGINEER - CIVIL

12-6-04

PLANS APPROVAL DATE

REGISTERED PROFESSIONAL ENGINEER Marwan N. Nader No. C 054426 Exp. 12/31/09 CIVIL STATE OF CALIFORNIA

The State of California or its officers or agents shall not be responsible for the accuracy or completeness of electronic copies of this plan sheet.

T.Y. LIN / MOFFATT & NICHOL
825 BATTERY STREET
SAN FRANCISCO, CA 94111

Caltrans now has a web site! To get to the web site, go to: http://www.dot.ca.gov

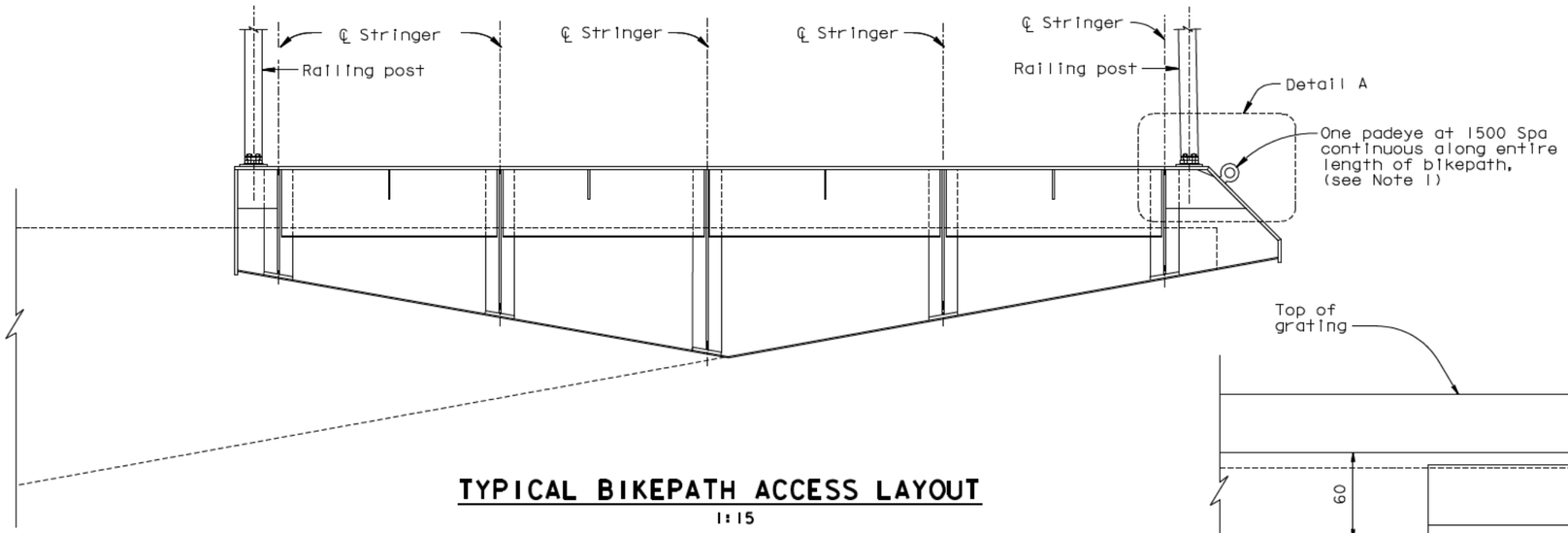

TYPICAL BIKEPATH ACCESS LAYOUT
1:15

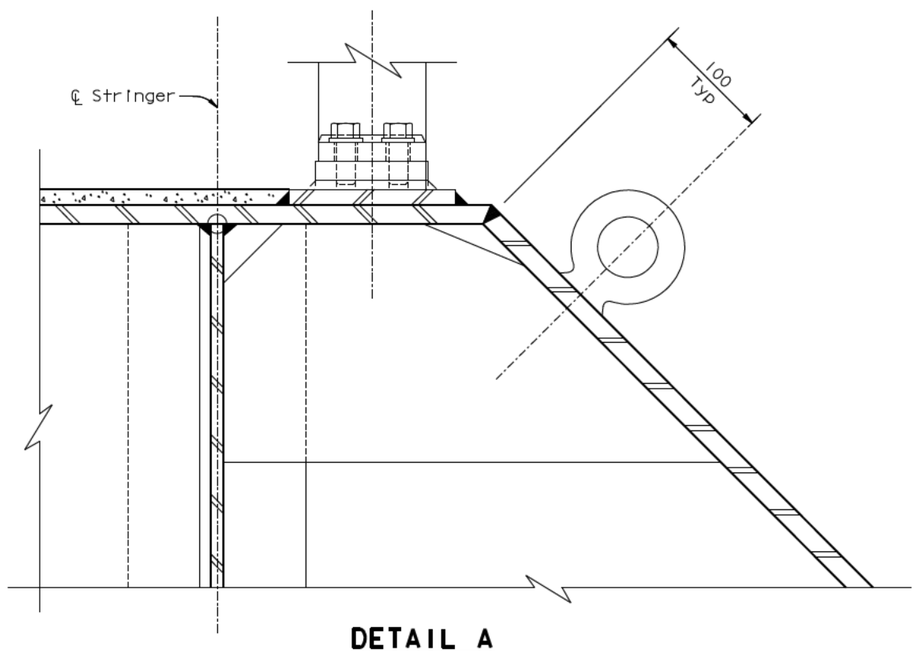

DETAIL A
1:2.5

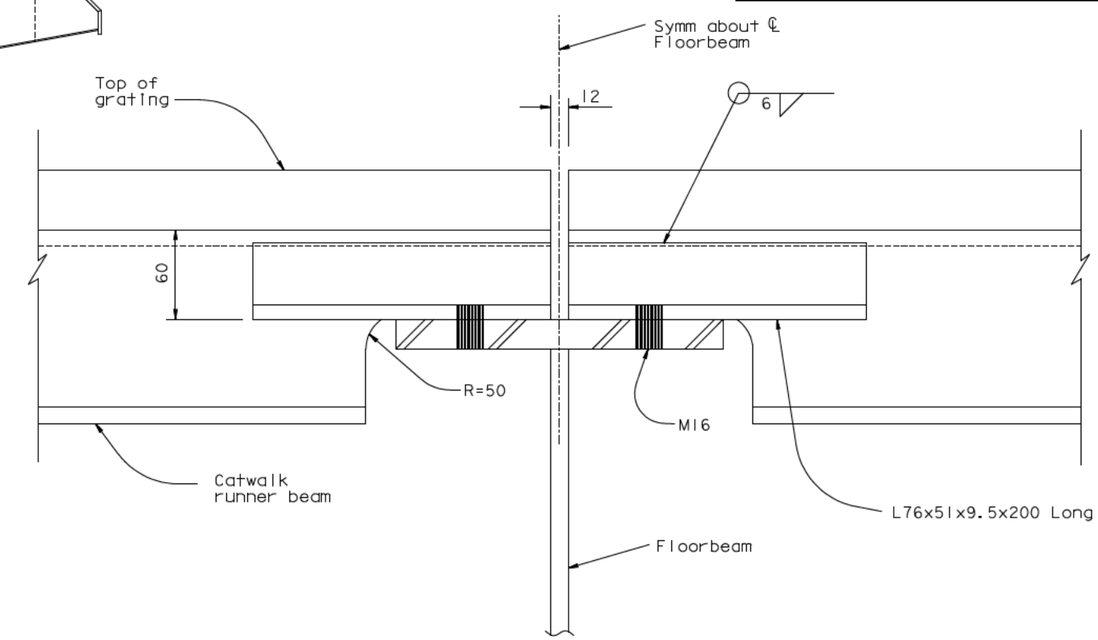

DETAIL B
1:2.5

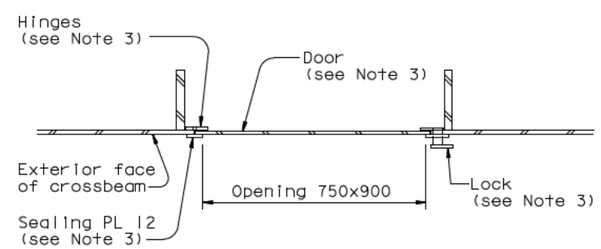

SECTION D-D
1:10

NOTES:

1. For bikepath padeye detail, see "Girder Access Details No.10 sheet.
2. For bikepath details, see "Bikepath Details" sheets.
3. For details not shown, see "Access Opening With Door At Vertical Face Of Tower Strut Facade" and "Access Opening Door Detail" on "Tower Access Details No.4" sheet.
4. Eliminate the detailed padeyes on the box girder, including the bikepath and the counterweights, unless directed otherwise by the Engineer. (2)

CONTRACT CHANGE ORDER NO. ____
SHEET ___ OF ___

REQUESTS FOR INFORMATION NOT ADDRESSED IN THIS CCO REMAIN IN FORCE

ALL DIMENSIONS ARE IN MILLIMETERS UNLESS OTHERWISE SHOWN

R. Vallizadeh/V. Toan/Y.L./W.L./F.C.
DESIGN OVERSIGHT
Roya Vallizadeh / Vong Toan / Y. Liu
SIGN OFF DATE 05/01/09

MARK	DATE	DESCRIPTIONS	BY	CH'D	CCO#
2	05/01/09	PADEYE MODIFICATIONS	GB	MN	41
1	06/22/07	WELDED PADEYES	NV	MN	41

REVISIONS

	BY	CHECKED
DESIGN	M. Nader	N. Vo
DETAILS	M. Roberts	N. Vo
QUANTITIES	M. Roberts	N. Vo

PREPARED FOR THE STATE OF CALIFORNIA DEPARTMENT OF TRANSPORTATION

R. Manzanarez
PROJECT ENGINEER

BRIDGE NO. 34-0006L/R
KILOMETER POST 13.2/13.9

SAN FRANCISCO OAKLAND BAY BRIDGE
EAST SPAN SEISMIC SAFETY PROJECT
SELF-ANCHORED SUSPENSION BRIDGE
(SUPERSTRUCTURE & TOWER)

GIRDER ACCESS DETAILS NO.8

Rev. Date: 5-18-98

ORIGINAL SCALE IN MILLIMETERS FOR REDUCED PLANS 0 10 20 30 40 50 60 70 80 90 100

CU 04
EA 0120F1

DISREGARD PRINTS BEARING EARLIER REVISION DATES

REVISION DATES (PRELIMINARY STAGE ONLY) 04/08/02 07/24/02 12/19/02

SHEET 531R2 OF

FILE -> I:\bb\04-012001\sas\contract plans and cco\cco\cco#41\6-update 05-01-09\dgn\akacc08d.dgn

100 % PS&E

USERNAME => dwinrow DATE PLOTTED => 01 MAY 2009 TIME PLOTTED => 09:17:01

DIST.	COUNTY	ROUTE	KILOMETER POST TOTAL PROJECT	SHEET NO.	TOTAL SHEETS
04	SF	80	13.2/13.9	949R1	1204

Caltrans Metric

REGISTERED ENGINEER - CIVIL

12-6-04

PLANS APPROVAL DATE

REGISTERED PROFESSIONAL ENGINEER Marwan N. Nader No. C 054426 Exp. 12/31/09 CIVIL STATE OF CALIFORNIA

The State of California or its officers or agents shall not be responsible for the accuracy or completeness of electronic copies of this plan sheet.

T.Y. LIN / MOFFATT & NICHOL
825 BATTERY STREET
SAN FRANCISCO, CA 94111

Caltrans now has a web site! To get to the web site, go to: http://www.dot.ca.gov

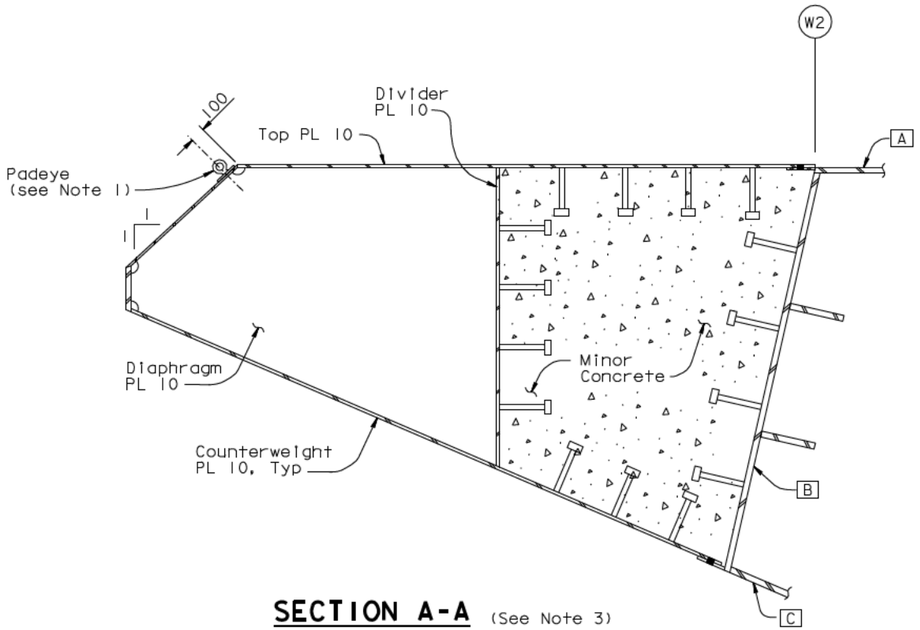

SECTION A-A (See Note 3)
1:20

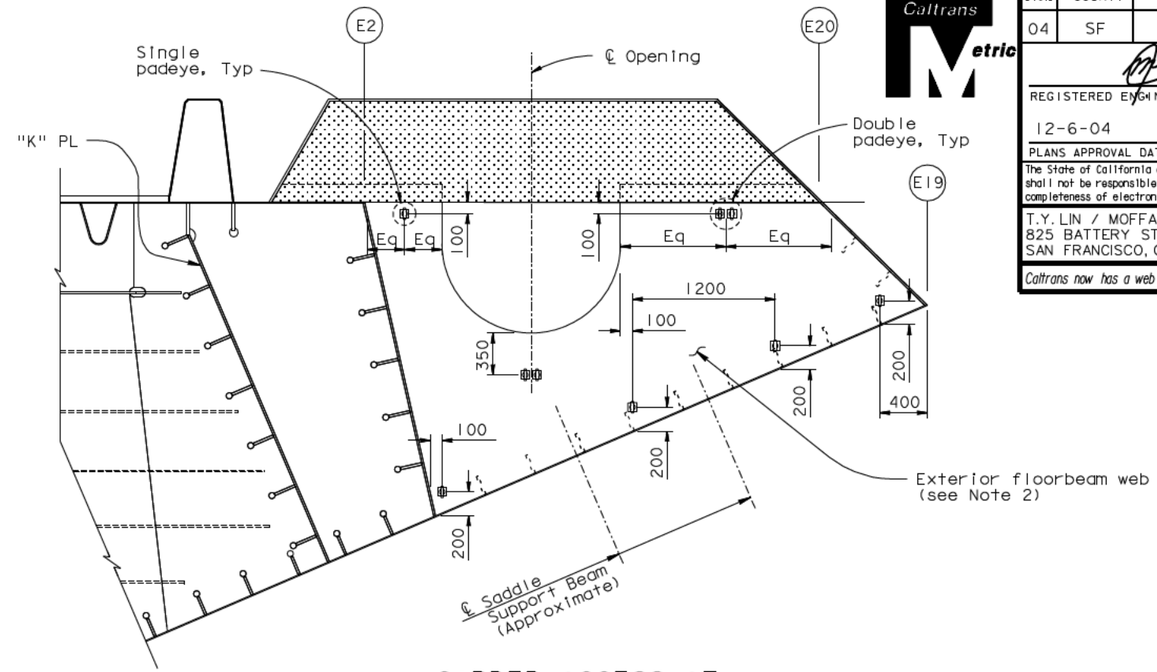

GIRDER ACCESS AT EXTERIOR PLATE AT PP118
1:25

("E" Line shown, "W" Line similar)

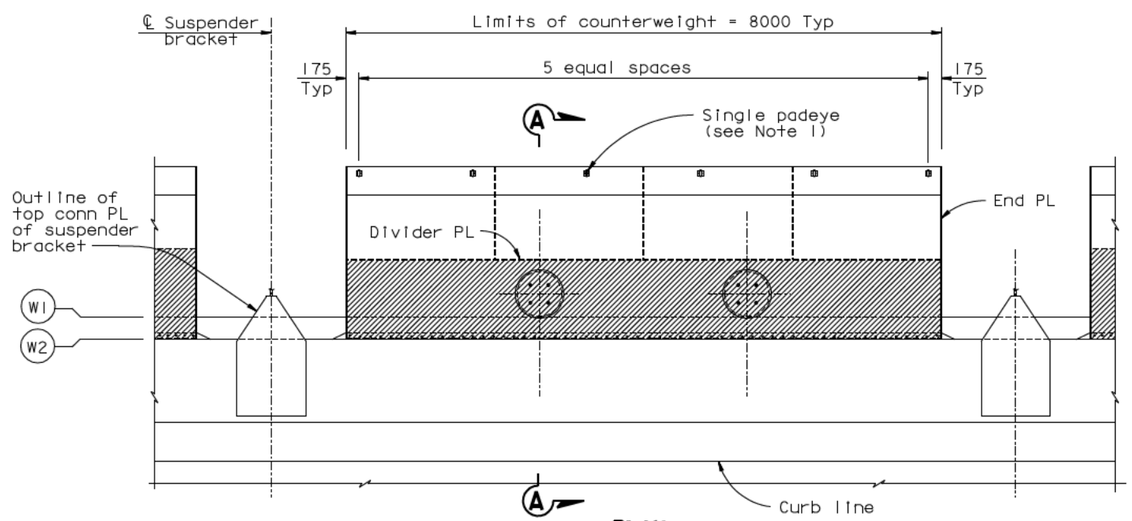

PLAN

COUNTERWEIGHT ACCESS LAYOUT
1:40

LEGEND:

Limits of minor concrete

Cable Saddle housing

NOTES:

1. For counterweight padeye use "Padeye At Bikepath Detail", see "Girder Access Details No. 10" sheet.
2. For saddle housing details, see "East Saddle Housing Details" sheets.
3. For counterweight details, see "Typical Girder Details No. 17" sheet.
4. Eliminate the detailed padeyes on the box girder, including the bikepath and the counterweights, unless directed otherwise by the Engineer.

CONTRACT CHANGE ORDER NO. ____
SHEET ___ OF ___

REQUESTS FOR INFORMATION NOT ADDRESSED IN THIS CCO REMAIN IN FORCE

ALL DIMENSIONS ARE IN MILLIMETERS UNLESS OTHERWISE SHOWN

100 % PS&E

R. Valizadeh/V. Toan/Y.L./W.L./F.C.
DESIGN OVERSIGHT
SIGN OFF DATE 05/01/09

MARK	DATE	DESCRIPTIONS	BY	CH'D	CCO#
1	05/01/09	PADEYE MODIFICATIONS	GB	MN	41

REVISIONS

	BY	CHECKED
DESIGN	M. Nader	N. Vo
DETAILS	M. Roberts	N. Vo
QUANTITIES	M. Roberts	N. Vo

PREPARED FOR THE STATE OF CALIFORNIA DEPARTMENT OF TRANSPORTATION

R. Manzanarez
PROJECT ENGINEER

BRIDGE NO. 34-0006L/R
KILOMETER POST 13.2/13.9

SAN FRANCISCO OAKLAND BAY BRIDGE
EAST SPAN SEISMIC SAFETY PROJECT
SELF-ANCHORED SUSPENSION BRIDGE
(SUPERSTRUCTURE & TOWER)

GIRDER ACCESS DETAILS NO. 9

Rev. Date: 5-18-98

ORIGINAL SCALE IN MILLIMETERS FOR REDUCED PLANS 0 10 20 30 40 50 60 70 80 90 100

CU 04
EA 0120F1

DISREGARD PRINTS BEARING EARLIER REVISION DATES

REVISION DATES (PRELIMINARY STAGE ONLY) 04/08/02 07/01/02 12/19/02

SHEET 532R1 OF

FILE -> I:\bb\04-012001\sas\contract plans and cco\cco\cco#41\6-update 05-01-09\dgn\akacc09b.dgn

USERNAME => dwinrow DATE PLOTTED => 01 MAY 2009 TIME PLOTTED => 09:11:59

DIST.	COUNTY	ROUTE	KILOMETER POST TOTAL PROJECT	SHEET NO.	TOTAL SHEETS
04	SF	80	13.2/13.9	950R3	1204

REGISTERED ENGINEER - CIVIL

12-6-04

PLANS APPROVAL DATE

REGISTERED PROFESSIONAL ENGINEER Marwan N. Nader No. C 054426 Exp. 12/31/09 CIVIL STATE OF CALIFORNIA

The State of California or its officers or agents shall not be responsible for the accuracy or completeness of electronic copies of this plan sheet.

T.Y. LIN / MOFFATT & NICHOL
825 BATTERY STREET
SAN FRANCISCO, CA 94111

Caltrans now has a web site! To get to the web site, go to: http://www.dot.ca.gov

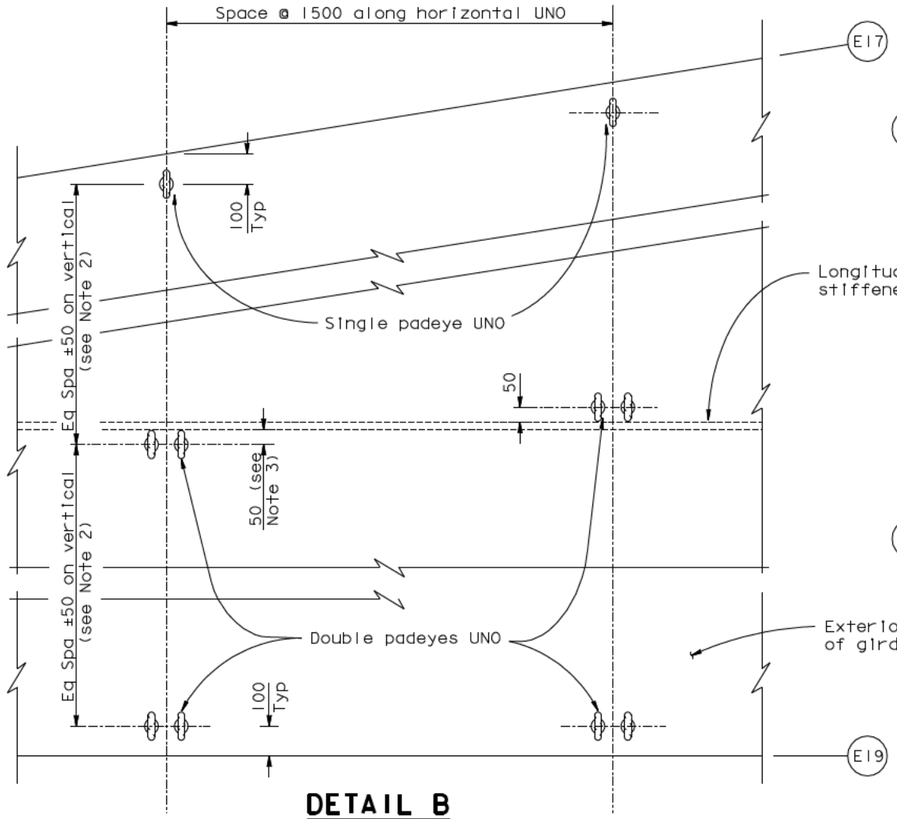

DETAIL B

1:10

(Only one stiffener shown for clarity)

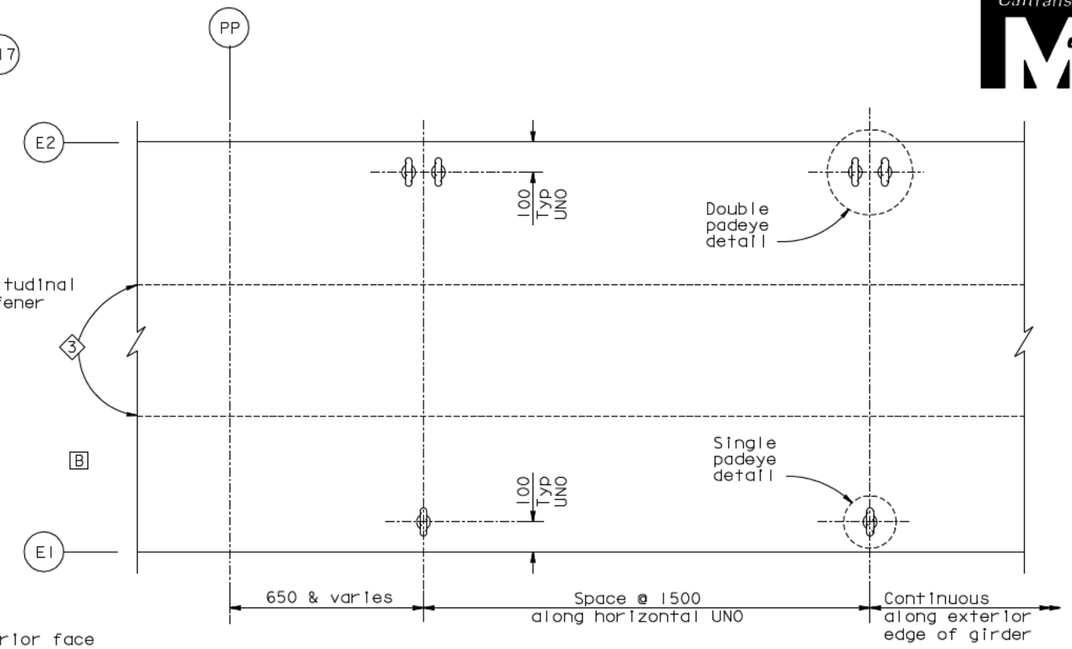

DETAIL A

1:10

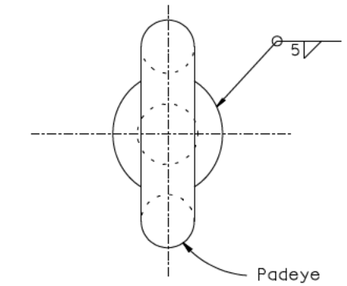

SINGLE PADEYE DETAIL

1:1.25

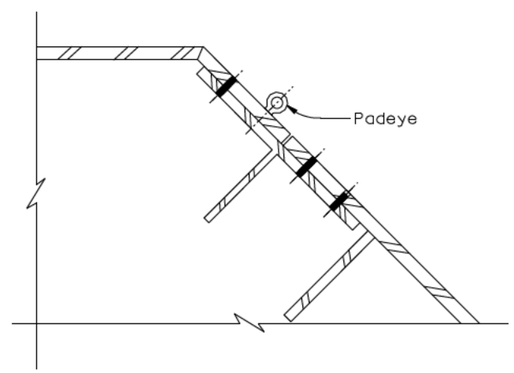

PADEYE AT ARCHITECTURAL SPLICE DETAIL

1:5

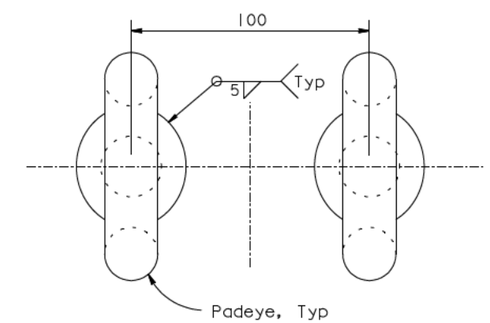

DOUBLE PADEYE DETAIL

1:1.25

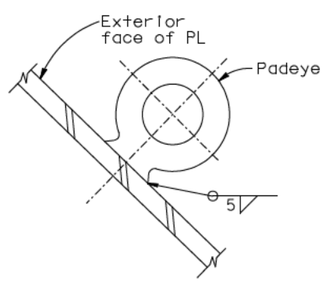

PADEYE AT BIKEPATH DETAIL

1:2.5

(Counterweight detail similar)

(Typical Welded Padeye)

NOTES:

1. Padeyes shall be Crosby size No.4 or equivalent, with a 25 mm diameter center hole.
2. Locate padeye bolt centers to be 50 mm from face of nearest shown longitudinal stiffener.
3. Padeye locations shall be shifted to avoid conflict with structural and drainage components and submitted for approval by the Engineer.
4. The padeye shall remain elastic under a tension and shear force of 22.2 kN. These forces shall not be considered simultaneous.
5. (3) Eliminate the detailed padeyes on the box girder, including the bikepath and the counterweights, unless directed otherwise by the Engineer.

CONTRACT CHANGE ORDER NO. ____
SHEET ___ OF ___

REQUESTS FOR INFORMATION NOT ADDRESSED IN THIS CCO REMAIN IN FORCE

MARK	DATE	DESCRIPTIONS	BY	CH'D	CCO#
3	05/01/09	PADEYE MODIFICATIONS	NV	MN	41
2	04/30/08	WELDED PADEYES	NV	MN	41
1	06/22/07	WELDED PADEYES	NV	MN	41

REVISIONS

R. Vallzadeh/V. Toan/Y.L./W.L./F.C.
DESIGN OVERSIGHT
SIGN OFF DATE 05/01/09

Rev. Date: 5-18-98

	BY	CHECKED
DESIGN	M. Nader	N. Vo
DETAILS	M. Roberts	N. Vo
QUANTITIES	M. Roberts	N. Vo

PREPARED FOR THE STATE OF CALIFORNIA DEPARTMENT OF TRANSPORTATION

R. Manzanarez
PROJECT ENGINEER

ALL DIMENSIONS ARE IN MILLIMETERS UNLESS OTHERWISE SHOWN

ORIGINAL SCALE IN MILLIMETERS FOR REDUCED PLANS 0 10 20 30 40 50 60 70 80 90 100

CU 04
EA 0120F1

BRIDGE NO. 34-0006L/R
KILOMETER POST 13.2/13.9

DISREGARD PRINTS BEARING EARLIER REVISION DATES 04/08/02 07/01/02 12/19/02

SAN FRANCISCO OAKLAND BAY BRIDGE
EAST SPAN SEISMIC SAFETY PROJECT
SELF-ANCHORED SUSPENSION BRIDGE

GIRDER ACCESS DETAILS NO. 10

REVISION DATES (PRELIMINARY STAGE ONLY)

SHEET 533R3 OF

FILE -> I:\bb\04-012001\sas\contract plans and cco\cco\cco#41\6-update 05-01-09\dgn\akacc10b.dgn

USERNAME => dwinrow DATE PLOTTED => 01 MAY 2009 TIME PLOTTED => 09:18:57

100% PS&E

DIST.	COUNTY	ROUTE	KILOMETER POST TOTAL PROJECT	SHEET NO.	TOTAL SHEETS
04	SF	80	13.2/13.9	954R1	1204

Caltrans Metric

REGISTERED ENGINEER - CIVIL

12-6-04

PLANS APPROVAL DATE

REGISTERED PROFESSIONAL ENGINEER Marwan N. Nader No. C 54426 Exp. 12/31/07 CIVIL STATE OF CALIFORNIA

The State of California or its officers or agents shall not be responsible for the accuracy or completeness of electronic copies of this plan sheet.

T.Y. LIN / MOFFATT & NICHOL
825 BATTERY STREET
SAN FRANCISCO, CA 94111

To get to the web site, go to: http://www.dot.ca.gov

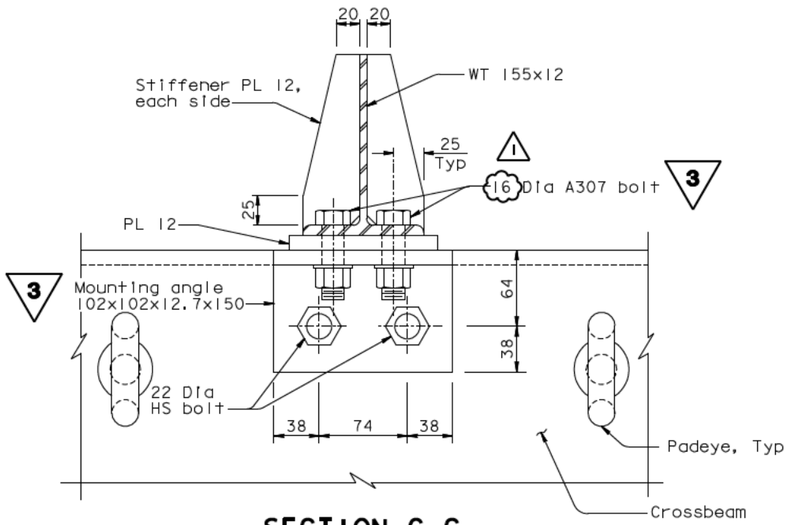

SECTION C-C
1:2.5

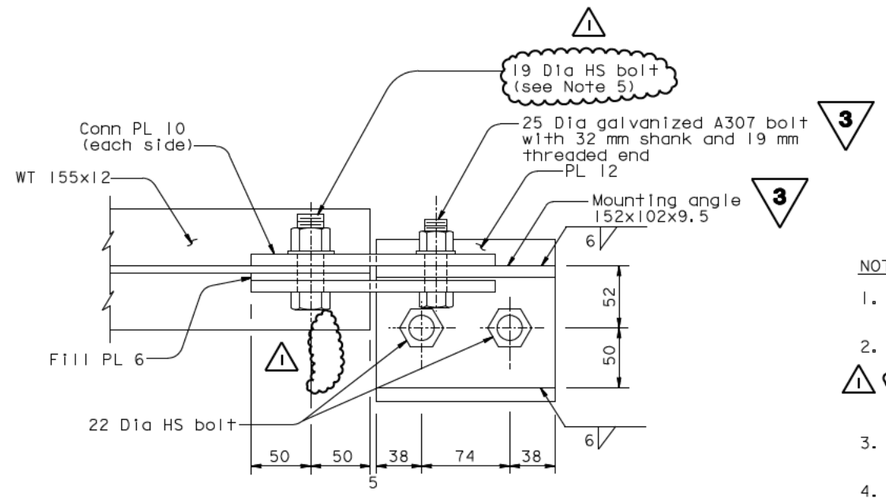

VIEW D-D
1:2.5

NOTES:

1. The bolt sizes shown correspond to US Standard bolt sizes and shall be galvanized.
2. All mounting angles connected by HS Bolts shall be provided at both faces of all crossbeams except above utility platforms. For locations see "Crossbeam Access Details No. 1" and "Crossbeam Access Details No. 3" sheets.
3. All A307 bolts shall be wrench tightened for future removal by maintenance personnel.
4. The 36 outriggers shall be installed at crossbeams located at panel points 27, 75, and 111, or as otherwise directed by the Engineer.
5. Bolt threads shall be excluded from the shear plane.
6. For padeye typical detail and design force, see "Girder Access Details No. 10" sheet.

MARK	DATE	DESCRIPTIONS	BY	CH'D	CCO#
1	06/22/07	WELDED PADEYES	NV	MN	41

REVISIONS

CONTRACT CHANGE ORDER NO. ____
SHEET ___ OF ___

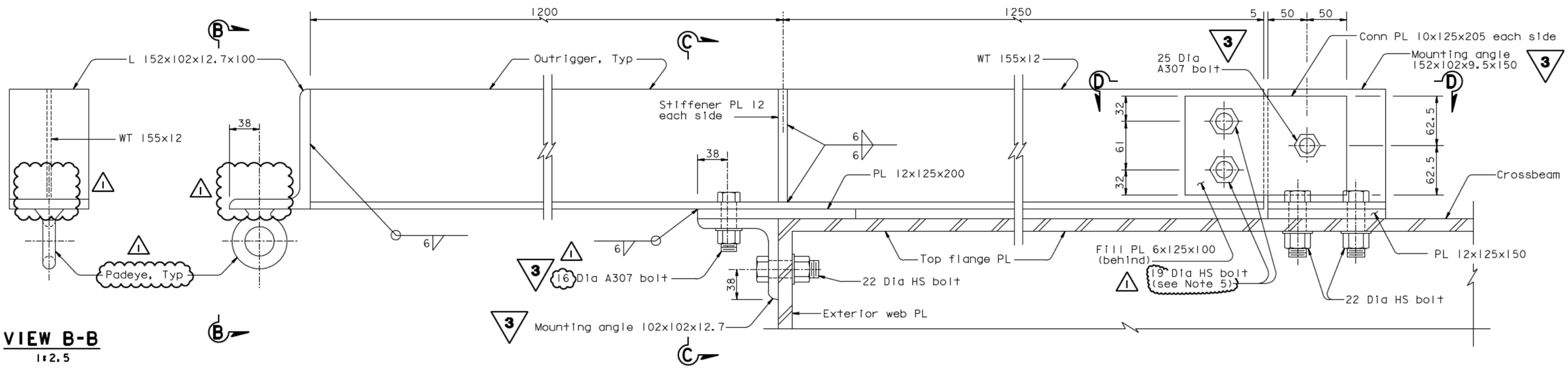

VIEW B-B
1:2.5

SECTION A-A
1:2.5

REVISED PER ADDENDUM NO. 3
DATED NOVEMBER 7, 2005

ALL DIMENSIONS ARE IN MILLIMETERS UNLESS OTHERWISE SHOWN

SAN FRANCISCO OAKLAND BAY BRIDGE
EAST SPAN SEISMIC SAFETY PROJECT
SELF-ANCHORED SUSPENSION BRIDGE
(SUPERSTRUCTURE & TOWER)

CROSSBEAM ACCESS DETAILS NO. 2

R. Vallzadeh/V. Toan/Y.L./W.L./F.C. DESIGN OVERSIGHT	DESIGN	M. Nader	N. Vo
SIGN OFF DATE 06/22/07	DETAILS	G. Baker	N. Vo
	QUANTITIES	G. Baker	N. Vo

PREPARED FOR THE STATE OF CALIFORNIA DEPARTMENT OF TRANSPORTATION

R. Manzanarez, PROJECT ENGINEER

BRIDGE NO. 34-0006L/R
KILOMETER POST 13.2/13.9

CU 04
EA 0120F1

Rev. Date: 5-18-98

ORIGINAL SCALE IN MILLIMETERS FOR REDUCED PLANS 0 10 20 30 40 50 60 70 80 90 100

DISREGARD PRINTS BEARING EARLIER REVISION DATES 04/08/02 07/01/02 12/17/02 10/13/05

SHEET 537R1 OF

FILE -> I:\bb\04-012001\sas\contract plans and cco\cco\in progress\cco#41\dgn\akcad02.dgn

USERNAME => ptom DATE PLOTTED => 02 JUL 2007 TIME PLOTTED => 10:09:37

100 % PS&E

DIST.	COUNTY	ROUTE	KILOMETER POST TOTAL PROJECT	SHEET NO.	TOTAL SHEETS
04	SF	80	13.2/13.9	955R1	1204

REGISTERED ENGINEER - CIVIL

12-6-04

PLANS APPROVAL DATE

REGISTERED PROFESSIONAL ENGINEER Marwan N.Nader No. C 54426 Exp. 12/31/07 CIVIL STATE OF CALIFORNIA

The State of California or its officers or agents shall not be responsible for the accuracy or completeness of electronic copies of this plan sheet.

T.Y. LIN / MOFFATT & NICHOL
825 BATTERY STREET
SAN FRANCISCO, CA 94111

To get to the web site, go to: http://www.dot.ca.gov

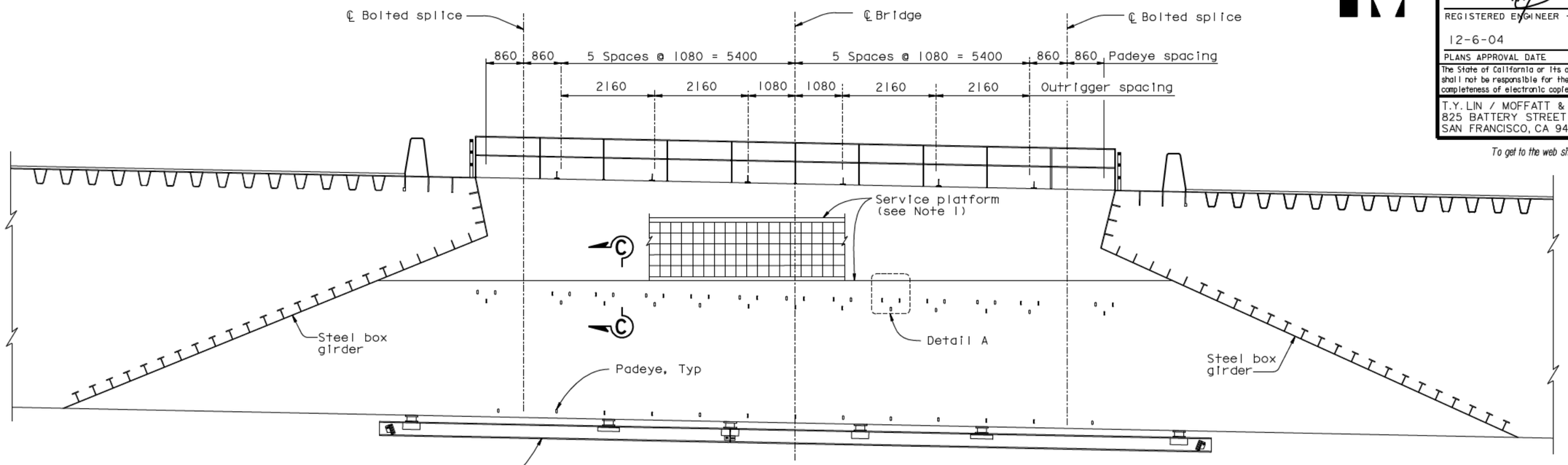

ELEVATION (Crossbeam with Service Platform)

1:50

MARK	DATE	DESCRIPTIONS	BY	CH'D	CCO#
1	06/22/07	WELDED PADEYES	NV	MN	41

REVISIONS

CONTRACT CHANGE ORDER NO. ____
SHEET ___ OF ___

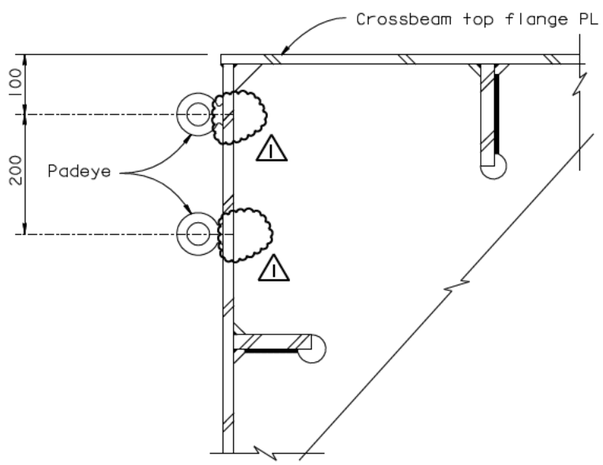

SECTION B-B

1:5

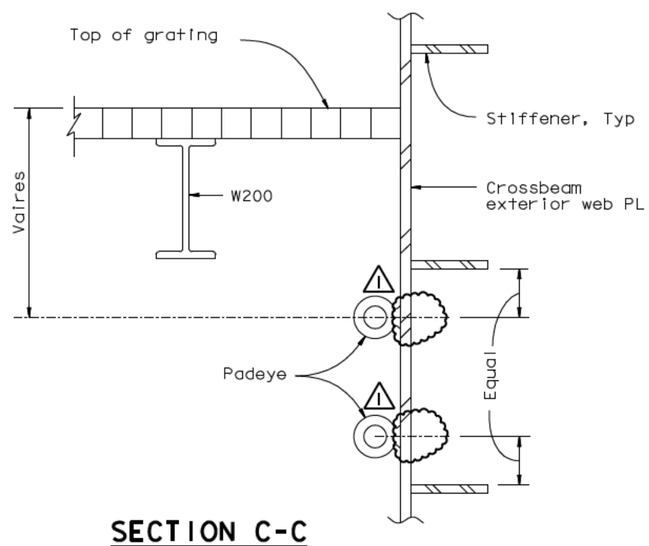

SECTION C-C

1:5

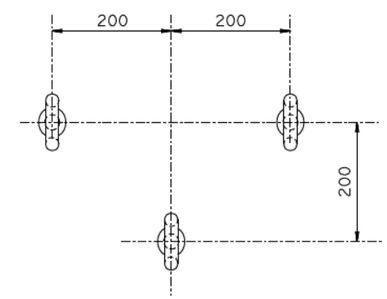

DETAIL A (3 Padeye unit)

1:5

NOTES:

1. For service platform details, see "Road Plans".
2. Crossbeams with service platform are PP14, 32, 50, 80 and 110. Platforms are attached to west face.
3. For rail details, see "Crossbeam Access Details No.4" sheet.
4. For padeye details, see "Girder Access Details No.10" sheet.

ALL DIMENSIONS ARE IN MILLIMETERS UNLESS OTHERWISE SHOWN

R. Valizadeh/V.Toan/Y.L./W.L./F.C.
DESIGN OVERSIGHT
SIGN OFF DATE 06/22/07

Rev. Date: 5-18-98

	BY	CHECKED
DESIGN	M. Nader	N. Vo
DETAILS	G. Baker	N. Vo
QUANTITIES	G. Baker	N. Vo

PREPARED FOR THE STATE OF CALIFORNIA DEPARTMENT OF TRANSPORTATION

R. Manzanarez
PROJECT ENGINEER

BRIDGE NO. 34-0006L/R
KILOMETER POST 13.2/13.9

SAN FRANCISCO OAKLAND BAY BRIDGE
EAST SPAN SEISMIC SAFETY PROJECT
SELF-ANCHORED SUSPENSION BRIDGE
(SUPERSTRUCTURE & TOWER)

CROSSBEAM ACCESS DETAILS NO. 3

ORIGINAL SCALE IN MILLIMETERS FOR REDUCED PLANS 0 10 20 30 40 50 60 70 80 90 100

CU 04
EA 0120F1

DISREGARD PRINTS BEARING EARLIER REVISION DATES

REVISION DATES (PRELIMINARY STAGE ONLY) 04/08/02 07/01/02 12/19/02

SHEET 538R1 OF

FILE -> I:\bb\04-012001\sas\contract plans and cco\cco\in progress\cco#41\dgn\akcad03.dgn

100% PS&E

DATE PLOTTED => 29 JUN 2007 TIME PLOTTED => 10:18:15

USERNAME => ptrom

CONTRACT CHANGE ORDER

Change Requested by: Engineer

CCO: 42 Suppl. No. 0 Contract No. 04 – 0120F4 Road SF-80-13.2/13.9 FED. AID LOC.:

To: **AMERICAN BRIDGE/FLUOR ENTERPRISES INC A JOINT VENTURE**

You are directed to make the following changes from the plans and specifications or do the following described work not included in the plans and specifications for this contract. ***NOTE: This change order is not effective until approved by the Engineer.***

Description of work to be done, estimate of quantities and prices to be paid. (Segregate between additional work at contract price, agreed price and force account.) Unless otherwise stated, rates for rental of equipment cover only such time as equipment is actually used and no allowance will be made for idle time. This last percentage shown is the net accumulated increase or decrease from the original quantity in the Engineer's Estimate

Adjustment of Compensation at Lump Sum:

ITEM 1.

Reroute electrical conduits and/or conductors, revise cable tray supports, delete identified call boxes and luminaires, and replace bike path lighting junction boxes as shown in revised and supplemental plan sheets.

The following revised and supplemental plan sheets detail all changes in this change order: 91R1, 93R1, 117R1, 118R1, 119R1, 120R1, 121R1, 122R1, 123R1, 124R1, 132R2, 133R2, 141R1, 142R1, 149R1, 152R1, 153R1, 154R1, 172R1, 188R1, 189R1, 190R1, 191R1, 192R1, 193R1, 194R1, 195R1, 197R1, 200R1, 208R2, 209R1, 210R1, 210S1, 211R1, 212R1, 215R1, 218R1, 219R1, 222R1, 247R1, 248R1, 249R1, 252R1, 257R1, 270R1, 271R1, 272R1, 273R1, 275S1, 275S2, 275S3, 276R1, 277R1, 284R1, 288R1, 289R1, 290R1, 333R1, 334R1, 335R1, 343R1, 344R1, 351R1, 352R1, 354R1, 357R1, 359R1, 360R1, 361R1, 370R1, 371R1, 379R1, 381R1, 382R1, 383R1, 384R1, 385R1, 390R1, 392R1, 393R1, 396R1, 397R1, 399R1, 407R1, 407S1, 407S2, 407S3, 407S4, 577R1, 578R2, 579R2, 580R2, 586R2, 587R2, 588R2, 592R1 and 966R3 (of 1204), as shown on sheets 4 through 100 of this change order:

This change order revises Special Provisions Section 10-3, "ELECTRICAL SYSTEMS," as follows:

Revise Section 10-3.18, "STRONG MOTION DETECTION SYSTEM," subsection "MATERIAL," subsection "Electrical Boxes," bulleted items "B" and "C" as shown on sheet 3 of this change order.

Revise Section 10-3.09, "PULL BOXES, SPLICE BOXES AND JUNCTION BOXES," subsection "OUTDOOR BARRIER RECEPTACLES, OUTDOOR," as shown on sheet 3 of this change order.

This change order resolves the costs associated with Contractor Request For Information (RFI) numbers 180R0, 218R0, 218R1, 218R2, 242R0, 252R0, 264R0, 264R1, 379R0, 379R1, 387R0, 402R0, 402R1, 462R0, 543R0, 561R0, 565R0, 565R1, 565R3, 726R1, and 968R0 with respect to changes listed above.

Adjustment of Compensation at Lump Sum $1,000,000.00

ITEM 2.

The items identified above in this change order have been paid as part of CCO 108S1 resolution. Therefore, the amount due under this change order will be adjusted by the amount paid under CCO 108S1 to prevent a double payment. Total amount paid under CCO 108S1, and to be credited to this change, is $1,000,000.00.

Adjustment of Compensation at Lump Sum ..... <$1,000,000.00>

CHANGE ORDER COST AND TIME SUMMARY

(ITEM 1) Adjustment of Compensation for work pursuant to this change order	$1,000,000.00
(ITEM 2) Amount paid under CCO 108S1 for this change order	<$1,000,000.00>
Total net pay for this change order	$0.00

CONTRACT CHANGE ORDER

Change Requested by: Engineer

CCO: 42 Suppl. No. 0 Contract No. 04 – 0120F4 Road SF-80-13.2/13.9 FED. AID LOC.:

Contract time is not addressed in CCO 108S1 for work identified in this change order. Therefore, consideration of a time adjustment will be deferred. Determination of a commensurate time adjustment will be made in accordance with Section 10-1.13, "PROGRESS SCHEDULE (CRITICAL PATH METHOD)" and Section 10-1.14, "TIME-RELATED OVERHEAD" of the Special Provisions, as well as Section 8-1.07, "LIQUIDATED DAMAGES", of the Standard Specifications.

Estimated Cost: Increase ☐ Decrease ☐ $0.00

By reason of this order the time of completion will be adjusted as follows: Deferred

Submitted by

Signature	Resident Engineer Kannu Balan, Senior T.E.	Date 8-5-10

Approval Recommended by

Signature	Supervising Bridge Engineer Brian Boal, Actg. Sup. B.E.	Date 8/5/10

Engineer Approval by

Signature	Supervising Transportation Engineer Gary Pursell, Sup.T.E.	Date 8/9/10

We the undersigned contractor, have given careful consideration to the change proposed and agree, if this proposal is approved, that we will provide all equipment, furnish the materials, except as otherwise be noted above, and perform all services necessary for the work above specified, and will accept as full payment therefor the prices shown above.

NOTE: If you, the contractor, do not sign acceptance of this order, your attention is directed to the requirements of the specifications as to proceeding with the ordered work and filing a written protest within the time therein specified.

Contractor Acceptance by

Signature	(Print name and title)	Date
	Michael D Flowers Project Director	8-6-10

Special Provisions changes:

I. OUTDOOR BARRIER RECEPTACLES:

1. In the Special Provisions, Section 10-3.09, "PULL BOXES, SPLICE BOXES AND JUNCTION BOXES," the subparagraph entitled, "OUTDOOR BARRIER RECEPTACLES, OUTDOOR," is revised as follows:

"**OUTDOOR BARRIER RECEPTACLES, OUTDOOR:**
The receptacles to be installed ~~in~~ outside the traffic barriers outdoors shall be rated ~~15 A, 120~~ V NEMA 5-20R, deep single gang, corrosion resistant enclosure and weatherproof~~, and with~~ threaded cap~~s~~ which effectively seals the housing when not in use."

II. STRONG MOTION DETECTION SYSTEM:

1. In the Special Provisions, Section 10-3.18, "STRONG MOTION DETECTION SYSTEM," the heading for subparagraph B of "Electrical Boxes" under "MATERIAL" paragraph is revised as follows:

"**B. Seismic Sensor Enclosure Stainless Steel Box with Hinged Cover (Enclosure Types 2-~~5~~7):** Enclosure to be NEMA 4X. Box to have padlock hasp installed of same material as enclosure. The backside of the enclosure must be a flush and smooth surface. Ground stud (6.35 mm x 508 mm) to be installed on inside lower right corner of door when viewed with door open and hinge on left side of box.

The enclosure shall be equivalent to the following: Circle AW P/N 14126-4XSCHC or Hoffman P/N A-1412CHNFSS6, without upper and lower mounting flanges, with #10-32 ground stud installed on inside lower right corner of the door (when viewed with door open and hinge on left side of box) and with padlock hasp similar to P/N A-PLKJIC in 316L stainless steel installed.

The watertight connectors shall be equivalent to Crouse Hinds P/N CGB397."

2. In the Special Provisions, Section 10-3.18, "STRONG MOTION DETECTION SYSTEM," the first paragraph of subparagraph C of "Electrical Boxes" under MATERIAL paragraph is revised as follows:

"**C. Seismic Sensor Cable Junction Box:** Seismic sensor cable junction boxes shall be NEMA Type 4X, ~~14-gauge~~ stainless steel enclosure with ~~lift-off cover~~ hinged door and door clamps of the size as shown on the plans. ~~Finish shall be hot-dip galvanized.~~ A nameplate with the inscription "Seismic Junction Box" shall be installed on the cover of each junction box."

REGISTERED PROFESSIONAL ENGINEER
MAXWELL F. TAKAMI
No. 8651
Exp 9/30/2008
ELECTRICAL
STATE OF CALIFORNIA

STATE OF CALIFORNIA - DEPARTMENT OF TRANSPORTATION

CONTRACT CHANGE ORDER MEMORANDUM

TO: Pete Siegenthaler, Prin TE /	FILE: E.A. 04 - 0120F4
M: Gary Pursell, Sup. TE	CO-RTE-PM- SF-80-13.2/13.9
	FED. NO.

CCO#: 42	SUPPLEMENT#: 0	Category Code: CBSA	CONTINGENCY BALANCE (incl. this change) $79,642,099.40
COST: $0.00	INCREASE ☐ DECREASE ☐		HEADQUARTERS APPROVAL REQUIRED? ☐ YES ☑ NO
SUPPLEMENTAL FUNDS PROVIDED: $0.00			IS THIS REQUEST IN ACCORDANCE WITH ENVIRONMENTAL DOCUMENTS? ☑ YES ☐ NO

CCO DESCRIPTION:
Electrical Modifications

PROJECT DESCRIPTION:
CONSTRUCT SELF-ANCHORED SUSPENSION BRIDGE

Original Contract Time:	Time Adj. This Change:	Previously Approved CCO Time Adjustments:	Percentage Time Adjusted: (including this change)	Total # of Unreconciled Deferred Time CCO(s): (including this change)
2490 Day(s)	0 Day(s)	227 Day(s)	9 %	6

THIS CHANGE ORDER PROVIDES FOR:

Incorporating revisions to general electric work as identified in the responses to Contractor's Request For Information (RFI) numbers 180R0, 218R0, 218R1, 218R2, 242R0, 252R0, 264R0, 264R1, 379R0, 379R1, 387R0, 402R0, 402R1, 462R0, 543R0, 561R0, 565R0, 565R1, 565R3, 726R1, and 968R0.

These revisions include, but are not limited to:
-Adding, extending, deleting or rerouting of electrical conduits and/or conductors.
-Replacing junction boxes (PB-LTG) for bike path lighting between PPs 9 and 128 with PB-1E and supported with channel C75x6.1.
-Deleting the duplex receptacles from inside the traffic barriers and installing single receptacle NEMA 5-20R in corrosion resistant box with threaded cap outside the traffic barriers.
-Installing pull-box PB-2L in lieu of PB-2A in Westbound, north traffic barrier between PPs 117 and 127.
-Revising the diaphragm cope at tower elevation 9M.
-Seismic sensor enclosure types and seismic junction boxes are to be stainless steel, not galvanized.

The reasons for these changes include constructibility issues with the conduits requiring rerouting. An incorrect detail on the Design Drawings for conduits penetrating thru tower wall was corrected. Outdoor barrier receptacle design requirements were revised so that they are consistent with the Oakland Touchdown #1 contract. At the 9M elevation, the diaphragm cope for utility conduits was modified because it was obstructed by a corner angle connected to the tower ring. There was a conflict between the Special Provisions and the Design Drawings material requirements for the seismic sensor enclosure types and the seismic junction boxes that was resolved.

Since the cost, of $1,000,000.00 in this change, is included in Contract Change Order 108 Supplement 1 (CCO 108S1) Claim Settlement Report No. 1 resolution costs the net payment in this change order is zero.

Contract time is not addressed in CCO 108S1 for work identified in this change order. Therefore, consideration of a time adjustment will be deferred until completion of the work specified herein. Determination of a commensurate time adjustment will be made in accordance with Section 10-1.13, "PROGRESS SCHEDULE (CRITICAL PATH METHOD)" and Section 10-1.14, "TIME-RELATED OVERHEAD" of the Special Provisions, as well as Section 8-1.07, "LIQUIDATED DAMAGES", of the Standard Specifications.

This change order received concurrence from Gary Pursell (Resident Engineer), Rick Morrow (Sup. Structure Rep), Peter Siegenthaler (Principal TE), Rich Foley (HQ Oversight), Ken Terpstra (Project Manager), Richard Land (Chief Engineer), Jon Tapping (HQ Coordinator), Tony Anziano (Toll Bridge Program Manager), Brian Maroney (Project Engineer), Wenyi Long (Design Oversight), and Lina Ellis (Structure Maintenance).

Claims Settlement Report (CSR) No. 1, for this project, revises the authority to "Issue and Approve" the changes listed in CCO 108S1 Appendices A & B. The authority to "Issue and Approve" the changes listed in Appendices A & B for the values of time and money contemplated therein has been delegated to the District for approval and approval of each of these change orders by the Headquarters CCO Desk will not be required. Since this change order is included in CCO 108S1 no Headquarters CCO Desk "Issue and Approve" is required, a copy of CCO 108S1 is attached for reference.

ADA Notice: For individuals with sensory disabilities, this document is available in alternate formats. For information call: (916) 654-6410 or TDD (916) 654-3880 or write Records and Forms Management, 1120 N Street, MS-89, Sacramento, CA 95814.

CONCURRED BY:		
Construction Engineer:	Res. Eng., Gary Pursell, Sup. TE	Date 6/26/07
Bridge Engineer:	Struct Rep, Rick Morrow, Sup TE	Date 9/18/07
Project Engineer:	CT Oversight, Wenyi Long, P.E.	Date 11/20/07
Project Manager:	Proj Manager, Ken Terpstra	Date 11/20/07
FHWA Rep.:	HQ, Rob Kobal	Date 9/19/07
Environmental:	SMI Tollbridges, Lina Ellis	Date 11/26/07
Other (specify):	PCE, Pete Siegenthaler, Prin TE	Date 6/26/07
Other (specify):	Toll Bridge Design, Jing Chen	Date 11/27/07
District Prior Approval By:		Date
HQ (Issue Approve) By:	HQ, Ken Darby	Date 12/7/07
Resident Engineer's Signature:	FOR PURSELL	Date 7/27/2010

ESTIMATE OF COST

	THIS REQUEST	TOTAL TO DATE
ITEMS	$0.00	$0.00
FORCE ACCOUNT	$0.00	$0.00
AGREED PRICE	$0.00	$0.00
ADJUSTMENT	$0.00	$0.00
TOTAL	$0.00	$0.00

FEDERAL PARTICIPATION

☐ PARTICIPATING ☐ PARTICIPATING IN PART ☑ NONE
☐ NON-PARTICIPATING (MAINTENANCE) ☐ NON-PARTICIPATING

FEDERAL SEGREGATION (if more than one Funding Source or P.I.P. type)
☑ CCO FUNDED PER CONTRACT ☐ CCO FUNDED AS FOLLOWS

FEDERAL FUNDING SOURCE	PERCENT

ADA Notice: For individuals with sensory disabilities, this document is available in alternate formats. For information call: (916) 654-6410 or TDD (916) 654-3880 or write Records and Forms Management, 1120 N Street, MS-89, Sacramento, CA 95814.

DIST	COUNTY	ROUTE	KILOMETER POST TOTAL PROJECT	SHEET No	TOTAL SHEETS
04	SF	80	13.2/13.9	91R1	1204

REGISTERED ELECTRICAL ENGINEER 12/19/02 DATE

12-6-04
PLANS APPROVAL DATE

REGISTERED PROFESSIONAL ENGINEER JENS ERLINGSSON No. 8249 Exp. 9/30/06 ELECTRICAL STATE OF CALIFORNIA

PB POWER, Inc.
A Parsons Brinckerhoff Company
303 Second St., Suite 700N
San Francisco, CA 94107-1317

The State of California or its officers or agents shall not be responsible for the accuracy or completeness of electronic copies of this plan sheet.

Caltrans now has a web site! To get to the web site, go to http://www.dot.ca.gov

Caltrans Metric

REQUEST FOR INFORMATION NOT ADDRESSED IN THIS CCO REMAIN IN FORCE

MARK	DATE	DESCRIPTIONS	BY	CH'D	CCO#
1	02/19/08	ELECTRICAL MODIFICATIONS	MP EL	RR	42

REVISIONS

CONTRACT CHANGE ORDER NO. _____
SHEET _____ OF _____

SYMBOLS

(See ES-1A and ES-1B for Additional Standard Symbols)

LAYOUT PLAN

- Barrier Pull Box, for type and size, see Pull Box Schedule
- PB-2A — Pull Box PB-2A for type and size, see Pull Box Schedule
- Conduit Coupling
- A — Equipment or Material Designation A=Sequential description
- 1 — Sheet Notes, applicable only to the Drawing 1=Sequential number
- 1 — Project Notes, Applicable for all Drawings 1=sequential number
- J — Junction Box, Conduit Fitting
- Electrical Equipment or Indicated on Plan Drawings
- Pole Mounted Lighting Fixture- See Lighting Pole Schedule for Type and Quantity
- Fluorescent Lighting Fixture
- Compact Fluorescent Lighting Fixture, Ceiling Mounted or main cable and suspender base metal halide lighting fixture
- Compact Fluorescent Lighting Fixture Wall Mounted
- Soffit Lighting Fixture or tower marker light
- G — Navigation Channel Marker Light - Green Color
- R — Navigation Pier Marker Light - Red Color
- A1 A2 — Aviation Lighting
- F — Fog Detector
- F — Fog Horn
- Pole Flood Light
- Single Receptacle, 20 A, 125 V, Straight blade, with deep single gang weatherproof and threaded cap (1)
- GFCI WP — Duplex Receptacle, 125 V, 20 A
  MH=450 mm above floor unless noted
  GFCI=Ground Fault Circuit Interrupter
  WP=Weatherproof
- $a WP — Single Pole Switch, 120/277 V, 20 A
  a - indicates Fixtures controlled
  WP - Weatherproof Cover
  MH - 1400 mm unless noted
- $3a WP — Three-way switch, 120/277 V, 20 A
  a - indicates Fixtures controlled
  WP - indicates Weatherproof Cover
  MH - 1400 mm unless noted
- $4a WP — Four-way switch, 120/277 V, 20 A
  a - indicates Fixtures controlled
  WP - indicates Weatherproof Cover
  MH - 1400 mm unless noted
- 30 A — Disconnect Switch 30 A-Frame size
- Conduit turned up
- Conduit turned down
- Conduit or Cable run, exposed
- Conduit run concealed in wall, concrete barrier, slab or routed underground duct bank
- Combination Expansion - Deflection fittings
- Flexible Conduit
- CT — Cable Tray
- Cable Tray
- Cables or Conduit down to Equipment (see plan for conduit number)

- Call Box, State furnished
- Ground Bare Copper Wire, Stranded
- Cable To Cable Exothermic Type Ground Connections
- Cable Ground Connection to Equipment, Compression Type
- Cable with Pigtail Ground Connections (see plan for length)

TRAFFIC OPERATIONS SYSTEMS (TOS)

- CCTV Camera (Mounted at Lighting Pole)
- Changeable Message Sign
- Preformed Loops
- Microwave Vehicle Detection Sensor (Mounted at Lighting Pole)
- Ramp Meter Signal

SINGLE LINE DIAGRAM

200/5 MRCT 3 — MM — SSPP — 67, 67N
Microprocessor protective relay
MM = Metering Module
SSPP = Solid State Protective Package
67,67N = Directional Overcurrent Relay
MRCT = Multi Ratio Current Transformer
200/5 = Current Amp/Ratio
3 = Quantity

1200 A / 500 MVA — N.C.(or N.O.) — 52 — 52-11N
Vacuum Circuit Breaker, (Drawout Type)
1200 A = Rating
500 MVA = Nominal Interrupting Class
52 11N = Assigned Breaker Number
N.C. = Normally Closed
N.O. = Normally Open

600-800 A / 42000 — 52S-1 E.O.
800/5 3 — L,S,G
Air Circuit Breaker (Drawout Type)
600-800 A = Rating
42000 = Interrupting Current
E.O. = Electrically Operated
52S-1 = Assigned breaker Number
800/5 = Current Transformer Setting
3 = Quantity
Solid state Trip Device
L = Long Time Delay
S = Short Time Pick up/Delay
G = Ground Fault pick up/Delay

750 kVA, 12.47 kV, 480 V
Transformer, Distribution, Dry Type
12.47 kV = Delta Primary
480 V = Wye Secondary
750 kVA = Size

MCP — 2 or 30 A
Combination Motor Starter, Drawout Type
MCP = Motor Circuit Protector
2 = Starter NEMA Size
30 A = Contactor Rating

30 A
Safety Switch,
30 A = Frame Size

3
Rotating Motor
3 = kW Rating

50 AT / 150 AF
Molded Case Circuit Breaker, Drawout Type
50 AT = Trip Rating
150 AF = Frame Size

Package Equipment or Panelboard

12 kV-120 V
Potential Transformer
Connected Open Delta

800/5 3
Current Transformer
800/5 = Current AMP/Ratio
3 = Quantity

Stress Relief Cable Connection

or
Fuse

ELEMENTARY/CONNECTION DIAGRAMS

- Bk, W — Signal Cable with Shield
- Contact, Normally open
- Contact, Normally Closed
- M or — Relay, Mechanical
  M = Motor
  C = Contactor
  42 = Running Circuit Breaker
  X or Y = Auxiliary
  R = Industrial
  TD = Time Delay
  PEC = Photo Electric Control
- OL — Motor Starter Overload Relay Thermal Bimetallic Element (OL-Overload)
- ON/OFF Switch
- DC Batteries
- AC/DC Inverter (Battery Charger/Rectifier)
- End Resistor and Capacitor
- Photoelectric Sensor
- 6, 7 — Communication Cable Noise Suppressor
- Terminal Block
- Duplex Receptacle
- Cabinet Fluorescent Light

REGISTERED PROFESSIONAL ENGINEER MAXWELL FUMIO TAKAKI No. E 8651 Exp. 9/30/2008 ELECTRICAL STATE OF CALIFORNIA

FOR REVISION ONLY

DEVICE NUMBER DEFINITIONS

27B	12.47 kV Bus Undervoltage Relay
27D	DC Undervoltage Relay
27F	Feeder Undervoltage Relay
27UV	480 V Bus Undervoltage Relay
42	Running Circuit Breaker
43/R	Manual Transfer / Remote
43/L	Manual Transfer / Local
49	Thermal Relay
50	Instantaneous Overcurrent Relay
51	AC Time Overcurrent Relay
51/51N	Phase and Ground Fault Time Overcurrent Relay
52	AC Circuit Breaker
67	AC Directional Overcurrent Relay
67N	AC Directional Ground Overcurrent Relay
86	Lock-Out Relay
88	Auxiliary Motor

ELECTRICAL SYMBOLS

NO SCALE

E-6

REVISED BY	DATE REVISED
AB	09/02

CALCULATED/DESIGNED BY	CHECKED BY
JW	

DESIGN OVERSIGHT: BEHZAD GOLEMOHAMMADI

STATE OF CALIFORNIA - DEPARTMENT OF TRANSPORTATION
Caltrans

LAST REVISION 00-00-00
DATE PLOTTED => 4/4/2008
TIME PLOTTED => 2:51:04 PM

FOR REDUCED PLANS ORIGINAL SCALE IS IN MILLIMETERS 0 20 40 60 80

DGN FILE =>T:\13103\MS\pse\SAS Struc\CCO\SAS CCO42\04-0120f1_0091R01.dgn
USERNAME =>llorico

CU 04251 EA 0120F1

TRAFFIC OPERATIONS SYSTEMS (TOS)

AVO	Analog Video Output
CCR	Camera Control Receiver
CCU	Camera Control Unit
CIA	Controller Interface Assembly
COMM	Communication
FDU	Fiber Distribution Unit
F/O	Fiber Optic
FODM	Fiber Optic Data Modem
FDC	Fiber Optic Drop Cable
FPC	Fiber Optic Pigtail Cable
FSC	Fiber Splice Closure
FTC	Fiber Optic Trunkline Cable
IF	Input File
MVDS	Microwave Vehicle Detection Sensor
PDA	Power Distribution Assembly
PL	Preformed Loop Detection Station
SCA	Serial Cable Assembly
SMFO	Single Mode Fiber Optic
TB	Terminal Box
TSC	Trunkline Splice Closure
TVCP	CCTV Camera Control Power Cable
TVC	CCTV Camera Control Cable
TVL	CCTV Camera Video Cable
TVP	CCTV Camera Power Cable
VTDD	Video Transmitter Duplex Data

PROJECT NOTES

1. 27C, 2#12 + #12 G.
2. 27C, 2#10 + #10 G.
3. 27C, 4#10 + #10 G.
4. 27C, 3#10 + #10 G.
5. 27C (Type 4), 2#12 + #12 G.
6. 27C (Type 4), 2#10 + #10 G.
7. 41C, 2-6 pairs #18, IS/OA.
8. 78C, 50 Pairs #18, IS/OA.
9. 27C, 3/C #6 + #8G. △1
10. 21C, 2-1 pair #18 (for Call Box signal) shielded pairs and overall shield.
11. 21C, 3#12 (for Call Box power).
12. 21C, (4) 1 pair #18 (for Call Box signal). Part of (2) 1-2 pairs #18, shielded pairs and overall shield.
13. 78C, 2#2 + #6 G and 2#10 + #10 G (for CMS Power).
14. 78C, Harness #4 and Harness #5 (for CMS Signal).
15. 41C, Cable type TVP and TVCP (for CCTV Power).
16. 41C, Cable type TVC and TVL (for CCTV Control Signal).
18. 41C, Cable type MVDS DLC (for MVDS Signal).
20. △1 78C, Cable type 10 DLC (for Preformed Loop Signal).
21. 27C (Flexible Conduit) 6#10 + #10 G.
22. 27C (Flexible Conduit) 3#10 + #10 G.
23. 27C, 7#10 + #10 G.
24. 27C, 6#10 + #10 G.

PROJECT NOTES (Continuation)

25. 27C, 7#10 + #10 G.
26. 41C, 3#6 + #8 G.
27. 41C, 3#8 + #10 G.
28. 21C, PVC coated - 2#10 + #10 G.
29. 21C, PVC coated, 3#12 (for Call Box Power).
30. 500 kcmil Bare Copper Wire.
31. 250 kcmil Bare Copper Wire.
32. #4/0 Bare Copper Wire.
33. #2 Bare Copper Wire.
34. 41C, 3#6 + #8 G, 3#8 + #10 G.
35. 41C, 6#8 + #10 G.
36. 21C, PVC coated, 1-2 pairs #18 (For Call Box signal).
37. Metal clad type cable with PVC overall jacket 3/C #10 (for Bike Path lighting).
38. Metal clad type cable with PVC overall jacket 1-2 pairs #18, shielded pairs and overall shield (for Call Box signal).
39. Metal clad type cable with PVC overall jacket 3/C #12 (for Call Box signal).
40. 78C, Cable Type A Fiber Optic.
41. 21C, (Flexible Conduit) 2#10 + 10 G.
42. 27C, 2#12 + #12G, 2#10 + #10G.
43. 21C, (Flexible conduit) 2#12 + 12 G.
44. 41C, 2#12 + #12 G, 6#10 + #10 G.
45. 27C, 2#12 + #12 G, 4#10 + #10 G.
46. 27C, Liquidtight flexible metal conduit, 4#10 + #10G. △1
47. 41C, Liquidtight flexible metal conduit, (MVDS DLC).
48. 27C, 3#6 + #8G. Liquidtight flexible metal conduit.

GENERAL NOTES

1. Conduit routing is diagrammatic. Pull box locations shall be located as shown on plan drawings. The Contractor shall provide additional pull boxes as required. Exact locations of equipment and devices may be adjusted depending on field conditions or by the Engineer.
2. Minimum size of conduits shall be 21 mm. Exposed conduits shall be PVC coated rigid galvanized steel, and conduits located inside girder shall be rigid galvanized steel.
3. Conduit fittings for 78 mm conduits and larger shall have a 610 mm minimum bending radius.
4. All conduits, including spares, shall be provided with pull wires prior to cable installations.
5. All equipment and devices shall be provided with nameplate tags per drawings.
6. All feeders and branch circuits shall be provided with ground wire.
7. 15 kV splice boxes shall be installed as shown and permanently marked "DANGER-HIGH VOLTAGE-KEEP OUT". The letters shall be block type and at least 50 mm in height.
8. The Contractor shall label all conductors and cables per wiring diagrams.
9. Padlocks shall be installed on all cabinets located on the platforms to prevent unauthorized access.
10. Call boxes will be State-furnished. (The Contractor shall install and terminate conductors per wiring diagram.
11. Ladder type cable trays shall be installed for each 15 kV and 600 V systems.
12. Solid bottom cable trays shall be installed for each low level signals, CALTRANS communications, fiber optic systems, and for Non-Caltrans utilities.
13. For Strong Motion Detection System general notes, see sheet E-361.
14. All E sheets are accurate for electrical work only.
15. All dimensions are in millimeters unless otherwise shown.
16. All unused conductors inside pull boxes shall be taped and coiled.
17. "Similar" when shown on the plans means this detail is applicable to different structure and conduit sizes.
18. Electrical fixtures shall not be field welded to the box girders or crossbeams. All welding to the box girders and crossbeams shall be shown on the box girder and crossbeam shop drawings for review and approval by the Engineer.
19. All welding of electrical fixtures to the tower shall be shown on the tower shop drawings for review and approval by the Engineer.
20. All connections to steel elements of the self-anchored suspension bridge superstructure of electrical equipment and fixtures, including conduits, pull boxes, lighting fixtures, messenger cables and others, shall be shop welded or bolted. All connection details shall appear on the working drawings for review and approval by the Engineer.
21. Prior to ordering any cable tray support structures, the Contractor shall:
    - Refer to Structural sheets to determine the locations of cable tray support structures.
    - Determine, based upon field conditions, when and where to use cable tray vertical or horizontal bends, horizontal tees or reducers.
    - Refer to AS-sheets to determine the type of cable tray support to use based on field conditions.
    - Cable tray support structures shown on the AS-sheets are generic and may have to be adapted to suit field conditions.
    - All modifications to the cable tray support structures as shown on the AS-sheets shall be approved by the Resident Engineer.
22. All installation of electrical conduit, equipment or pull boxes shall be either shop welded or bolted.

ELECTRICAL NOTES AND ABBREVIATIONS

E-8

DIST	COUNTY	ROUTE	KILOMETER POST TOTAL PROJECT	SHEET No	TOTAL SHEETS
04	SF	80	13.2/13.9	93R1	1204

REGISTERED ELECTRICAL ENGINEER 12/19/02 DATE

12-6-04
PLANS APPROVAL DATE

REGISTERED PROFESSIONAL ENGINEER JENS ERLINGSSON No. 8249 Exp. 9/30/06 ELECTRICAL STATE OF CALIFORNIA

PB POWER, Inc.
A Parsons Brinckerhoff Company
303 Second St., Suite 700N
San Francisco, CA 94107-1317

The State of California or its officers or agents shall not be responsible for the accuracy or completeness of electronic copies of this plan sheet.

Caltrans now has a web site! To get to the web site, go to http://www.dot.ca.gov

REGISTERED PROFESSIONAL ENGINEER MAXWELL FUMIO TAKAKI No. E 8651 Exp. 9/30/2008 ELECTRICAL STATE OF CALIFORNIA

FOR REVISION ONLY

REQUEST FOR INFORMATION NOT ADDRESSED IN THIS CCO REMAIN IN FORCE

MARK	DATE	DESCRIPTIONS	BY	CH'D	CCO#
△1	02/19/08	ELECTRICAL MODIFICATIONS	MP EL	RR	42

REVISIONS

CONTRACT CHANGE ORDER NO._____
SHEET _____ OF _____

CALCULATED/DESIGNED BY	AB	REVISED BY	IAH
CHECKED BY	JW	DATE REVISED	3/04
DATE 08/02	09/02		

DESIGN OVERSIGHT
BEHZAD GOLEMOHAMMADI

STATE OF CALIFORNIA - DEPARTMENT OF TRANSPORTATION
Caltrans

LAST REVISION 00-00-00
DATE PLOTTED => 4/4/2008
TIME PLOTTED => 2:54:28 PM

FOR REDUCED PLANS ORIGINAL SCALE IS IN MILLIMETERS 0 20 40 60 80

DGN FILE =>T:\13103\MS\pse\SAS Struc\CCO\SAS CCO42\04-0120f1_0093R01.dgn
USERNAME =>llorico

CU 04251 EA 0120F1

DIST	COUNTY	ROUTE	KILOMETER POST TOTAL PROJECT	SHEET No	TOTAL SHEETS
04	SF	80	13.2/13.9	117R1	1204

REGISTERED ELECTRICAL ENGINEER 12/19/02 DATE

12-6-04
PLANS APPROVAL DATE

REGISTERED PROFESSIONAL ENGINEER JENS ERLINGSSON No. 8249 Exp. 9/30/06 ELECTRICAL STATE OF CALIFORNIA

PB POWER, Inc.
A Parsons Brinckerhoff Company
303 Second St., Suite 700N
San Francisco, CA 94107-1317

The State of California or its officers or agents shall not be responsible for the accuracy or completeness of electronic copies of this plan sheet.

Caltrans now has a web site! To get to the web site, go to http://www.dot.ca.gov

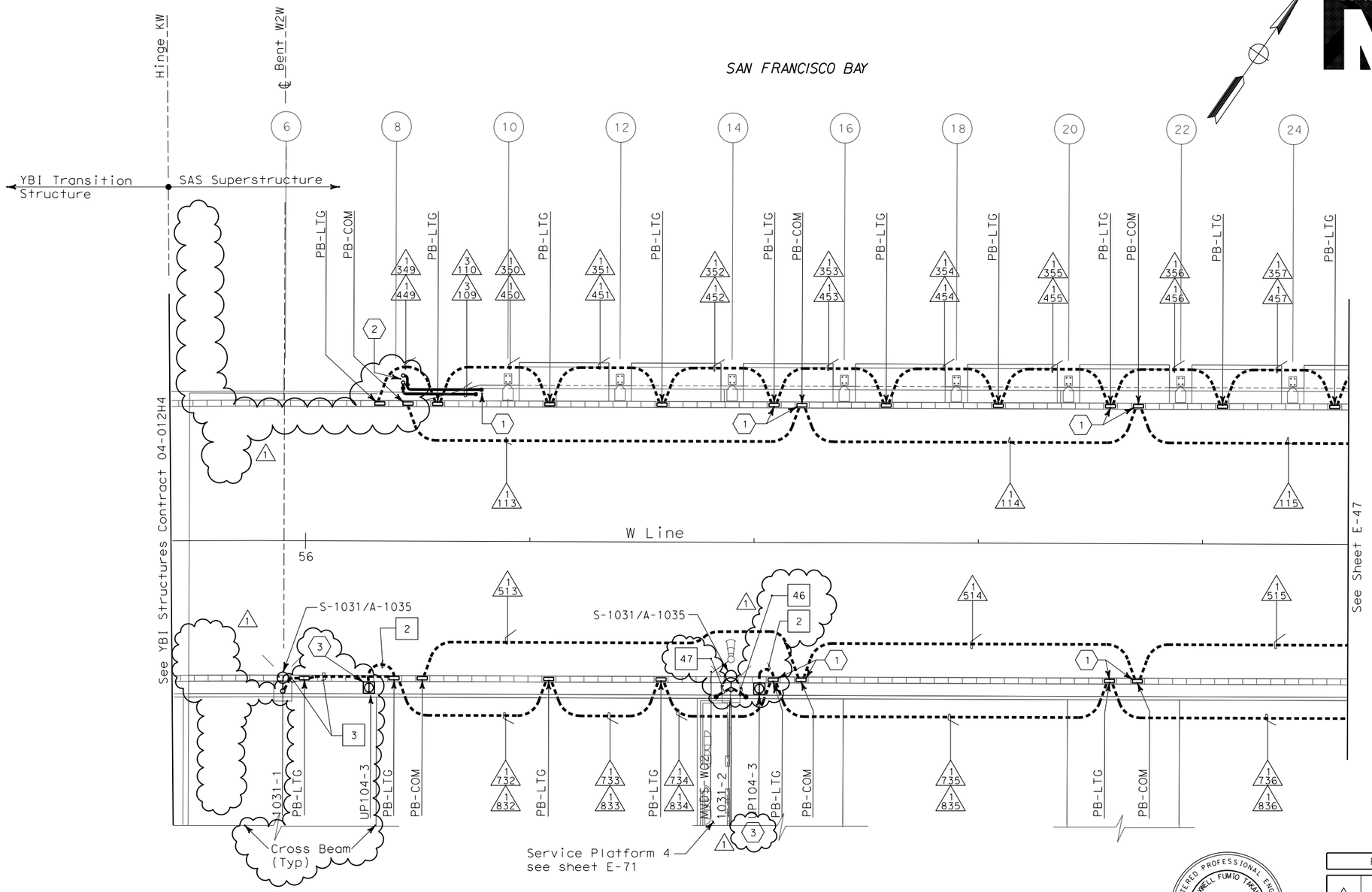

SHEET NOTES:

1. Conduit from barrier pullbox or other equipment down into Girder, see sheet E-96.
2. For conduit to Suspend Lighting, see sheet E-226. Typ for all PB-LTG located on the north side of the roadway.
3. Roadway Barrier Receptacle, see Detail 1, sheet E-68.

NOTES:

1. References:
   - For typical details and locations of conduit connections to light poles, barrier outlet boxes, call boxes, overhead sign lighting, CCTV and MVDS, see sheets E-66, E-67 and E-68.
   - TOS equipment is shown for conduit routing only. For typical details of TOS controller and devices, see sheets E-344 through E-357.
   - For types of pullboxes, splice boxes and enclosures, see sheet E-83.
   - For circuit and conduit/cable tray schedules, see sheets starting at E-401.
2. For Roadway Level Lighting Pole Schedules, see sheet E-82.

CONDUIT PLAN

REGISTERED PROFESSIONAL ENGINEER MAXWELL FUMIO TAKAKI No. E 8651 Exp. 9/30/2008 ELECTRICAL STATE OF CALIFORNIA

FOR REVISION ONLY

REQUEST FOR INFORMATION NOT ADDRESSED IN THIS CCO REMAIN IN FORCE

MARK	DATE	DESCRIPTIONS	BY	CH'D	CCO#
1	02/19/08	ELECTRICAL MODIFICATIONS	MP EL	RR	42

REVISIONS

CONTRACT CHANGE ORDER NO._____
SHEET _____ OF _____

SAS SUPERSTRUCTURE ROADWAY WESTBOUND
LIGHTING AND ELECTRICAL SYSTEMS

SCALE 1:200

E-46

THIS PLAN IS ACCURATE FOR ELECTRICAL WORK ONLY.

MARK	DATE	REVISED BY	DATE REVISED

CALCULATED/DESIGNED BY FK DATE 8/02
CHECKED BY IAH 8/02

DESIGN OVERSIGHT
BEHZAD GOLEMOHAMMADI

STATE OF CALIFORNIA - DEPARTMENT OF TRANSPORTATION
Caltrans

LAST REVISION 00-00-00
DATE PLOTTED => 5/9/2008
TIME PLOTTED => 1:47:35 PM

FOR REDUCED PLANS ORIGINAL SCALE IS IN MILLIMETERS 0 20 40 60 80

DGN FILE =>T:\13103\MS\pse\SAS Struc\CCO\SAS CC042\04-0120f1_0117R01.dgn
USERNAME =>llorico

CU 04251 EA 0120F1

DIST	COUNTY	ROUTE	KILOMETER POST TOTAL PROJECT	SHEET No	TOTAL SHEETS
04	SF	80	13.2/13.9	118R1	1204

Caltrans Metric

REGISTERED ELECTRICAL ENGINEER 12/19/02 DATE

12-6-04
PLANS APPROVAL DATE

REGISTERED PROFESSIONAL ENGINEER JENS ERLINGSSON No. 8249 Exp. 9/30/06 ELECTRICAL STATE OF CALIFORNIA

PB POWER, Inc.
A Parsons Brinckerhoff Company
303 Second St., Suite 700N
San Francisco, CA 94107-1317

The State of California or its officers or agents shall not be responsible for the accuracy or completeness of electronic copies of this plan sheet.

Caltrans now has a web site! To get to the web site, go to http://www.dot.ca.gov

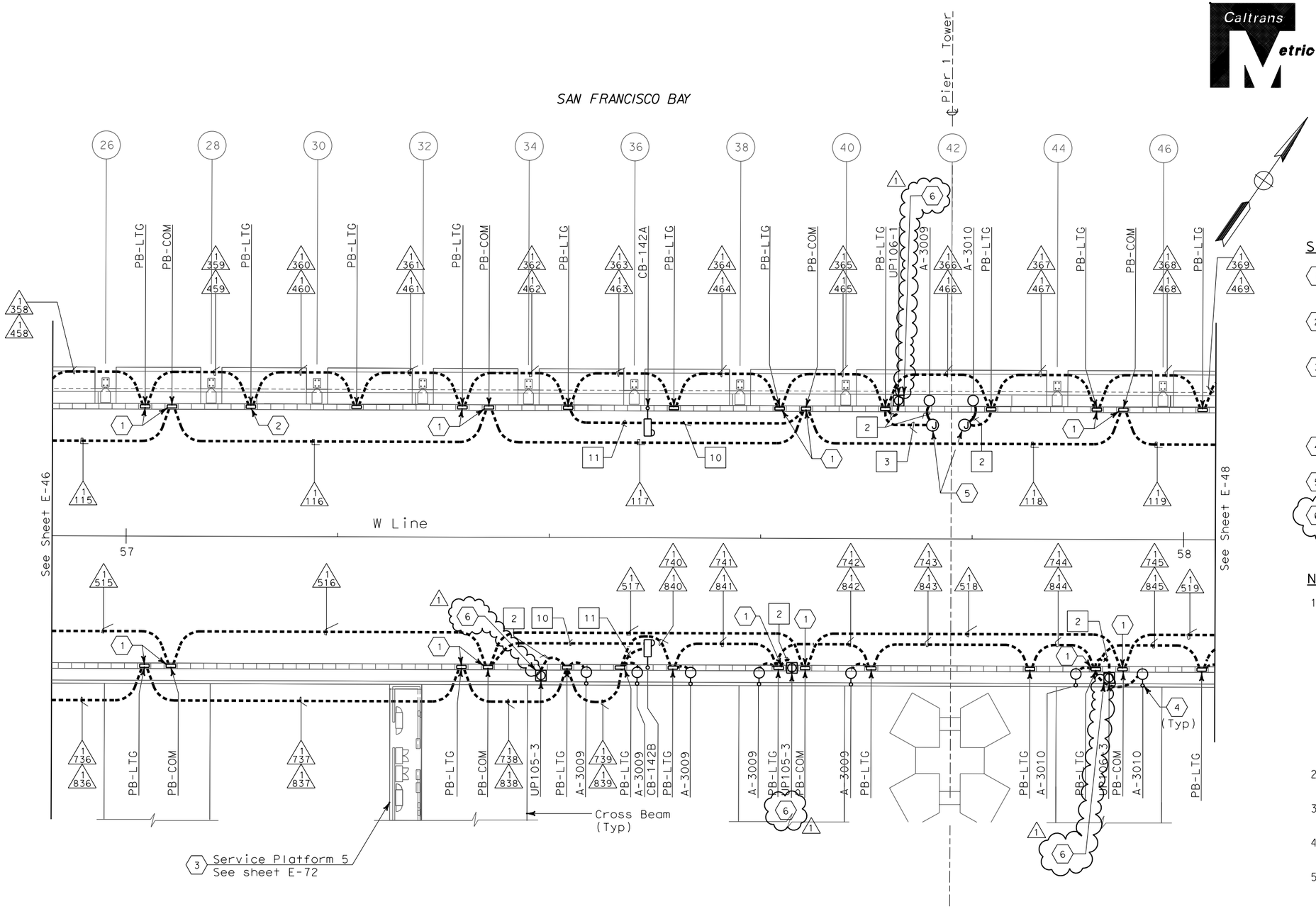

SHEET NOTES:

1. Conduit from barrier pullbox or other equipment down into Girder, See sheet E-97.
2. For conduit to Suspend Lighting, See sheet E-227. Typ for all PB-LTG located on the north side of the roadway.
3. Contractor shall furnish and install UP-105 per sheet E-72. For complete scope of work on platform and other related work not shown on this sheet, see Electrical Special Provisions.
4. See sheet E-67 for pylon floodlight conduit location.
5. Type PB-1C junction box is used on suspender brackets.
6. Roadway Barrier Receptacle, see Detail 1, sheet E-68.

NOTES:

1. References:
   - For typical details and locations of conduit connections to light poles, barrier outlet boxes, call boxes, overhead sign lighting, CCTV and MVDS, see sheets E-67, E-68 and E-68.
   - TOS equipment is shown for conduit routing only. For typical details of TOS controller and devices, see sheets E-344 through E-357.
   - For types of pullboxes, splice boxes and enclosures, see sheet E-83.
   - For circuit and conduit/cable tray schedules, see sheets starting at E-401.
2. For Roadway Call Boxes, refer to sheet E-396.
3. For Roadway Level Lighting Pole Schedule, see sheet E-82.
4. For Roadway Level Call Box Schedule, see sheet E-397.
5. For number of lighting fixtures (main tower lights), see lighting schedule sheets E-271 and E-272.

REGISTERED PROFESSIONAL ENGINEER MAXWELL FUMIO TAKAKI No. E 8651 Exp. 9/30/2008 ELECTRICAL STATE OF CALIFORNIA

FOR REVISION ONLY
THIS PLAN IS ACCURATE FOR ELECTRICAL WORK ONLY.

REQUEST FOR INFORMATION NOT ADDRESSED IN THIS CCO REMAIN IN FORCE

MARK	DATE	DESCRIPTIONS	BY	CH'D	CCO#
1	02/19/08	ELECTRICAL MODIFICATIONS	MP EL	RR	42

REVISIONS

CONTRACT CHANGE ORDER NO._____
SHEET _____ OF _____

CONDUIT PLAN

SAS SUPERSTRUCTURE ROADWAY WESTBOUND
LIGHTING AND ELECTRICAL SYSTEMS

SCALE 1:200

E-47

STATE OF CALIFORNIA - DEPARTMENT OF TRANSPORTATION
Caltrans

DESIGN OVERSIGHT: BEHZAD GOLEMOHAMMADI

CALCULATED/ DESIGNED BY	FK	DATE 8/02	REVISED BY
CHECKED BY	IAH	8/02	DATE REVISED

DATE PLOTTED => 4/4/2008
TIME PLOTTED => 2:57:25 PM
LAST REVISION 00-00-00

FOR REDUCED PLANS ORIGINAL SCALE IS IN MILLIMETERS 0 20 40 60 80

DGN FILE =>T:\13103\MS\pse\SAS Struc\CCO\SAS CC042\04-0120f1_0118R01.dgn
USERNAME =>llorico

CU 04251

EA 0120F1

DIST	COUNTY	ROUTE	KILOMETER POST TOTAL PROJECT	SHEET No	TOTAL SHEETS
04	SF	80	13.2/13.9	119R1	1204

REGISTERED ELECTRICAL ENGINEER 12/19/02 DATE

12-6-04
PLANS APPROVAL DATE

REGISTERED PROFESSIONAL ENGINEER JENS ERLINGSSON No. 8249 Exp. 9/30/06 ELECTRICAL STATE OF CALIFORNIA

PB POWER, Inc.
A Parsons Brinckerhoff Company
303 Second St., Suite 700N
San Francisco, CA 94107-1317

The State of California or its officers or agents shall not be responsible for the accuracy or completeness of electronic copies of this plan sheet.

Caltrans now has a web site! To get to the web site, go to http://www.dot.ca.gov

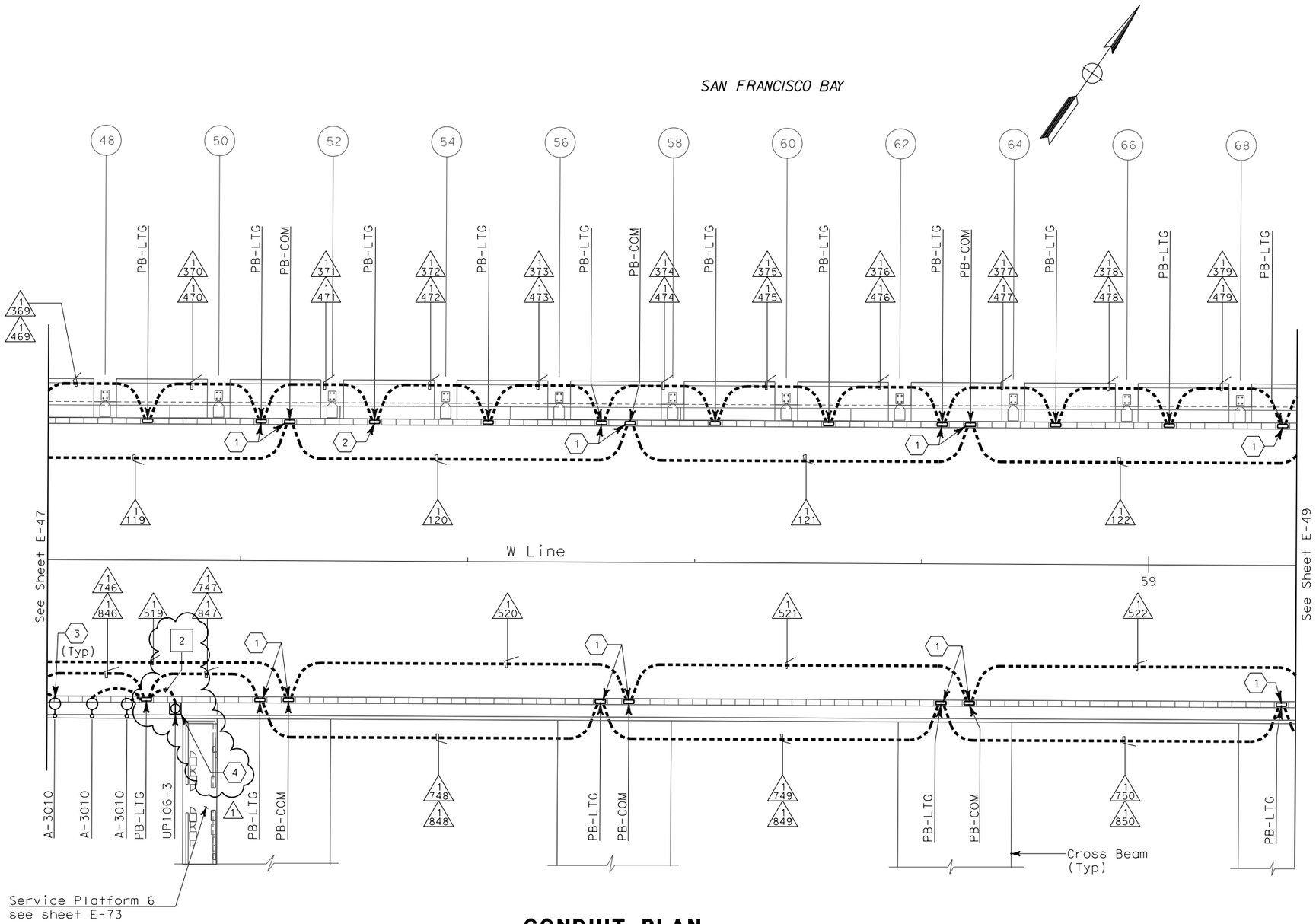

CONDUIT PLAN

SHEET NOTES:

1. Conduit from barrier pullbox or other equipment down into Girder, See sheet E-98.
2. For conduit to Suspend Lighting, see sheet E-228. Typ for all PB-LTG located on the north side of the roadway.
3. See sheet E-67 pylon floodlight conduit location.
4. Roadway Barrier Receptacle, see Detail 1, sheet E-68.

NOTES:

1. References:
   - For typical details and locations of conduit connections to light poles, barrier outlet boxes, call boxes, overhead sign lighting, CCTV and MVDS, see sheets E-66, E-67 and E-68.
   - TOS equipment is shown for conduit routing only. For typical details of TOS controller and devices, see sheets E-344 through E-357.
   - For types of pullboxes, splice boxes and enclosures, see sheet E-83.
   - For circuit and conduit/cable tray schedules, see sheets starting at E-401.
2. For Roadway Level Light Pole Schedule, see sheet E-82.
3. For number of lighting fixtures (main tower lights), see lighting schedule sheets E-271 and E-272.

REGISTERED PROFESSIONAL ENGINEER MAXWELL FUMIO TAKAKI No. E 8651 Exp. 9/30/2008 ELECTRICAL STATE OF CALIFORNIA

FOR REVISION ONLY

REQUEST FOR INFORMATION NOT ADDRESSED IN THIS CCO REMAIN IN FORCE

MARK	DATE	DESCRIPTIONS	BY	CH'D	CCO#
1	02/19/08	ELECTRICAL MODIFICATIONS	MP EL	RR	42

REVISIONS

CONTRACT CHANGE ORDER NO._____
SHEET _____ OF _____

THIS PLAN IS ACCURATE FOR ELECTRICAL WORK ONLY.

SAS SUPERSTRUCTURE ROADWAY WESTBOUND
LIGHTING AND ELECTRICAL SYSTEMS
SCALE 1:200

E-48

STATE OF CALIFORNIA - DEPARTMENT OF TRANSPORTATION
Caltrans

DESIGN OVERSIGHT: BEHZAD GOLEMOHAMMADI

CALCULATED/ DESIGNED BY	FK	DATE 8/02	REVISED BY
CHECKED BY	IAH	8/02	DATE REVISED

LAST REVISION 00-00-00
DATE PLOTTED => 4/4/2008
TIME PLOTTED => 3:05:50 PM

FOR REDUCED PLANS ORIGINAL SCALE IS IN MILLIMETERS 0 20 40 60 80

DGN FILE =>T:\13103\MS\pse\SAS Struc\CCO\SAS CCO42\04-0120f1_0119R01.dgn
USERNAME =>llorico

CU 04251 EA 0120F1

DIST	COUNTY	ROUTE	KILOMETER POST TOTAL PROJECT	SHEET No	TOTAL SHEETS
04	SF	80	13.2/13.9	120R1	1204

Caltrans Metric

REGISTERED ELECTRICAL ENGINEER 12/19/02 DATE

12-6-04
PLANS APPROVAL DATE

REGISTERED PROFESSIONAL ENGINEER JENS ERLINGSSON No. 8249 Exp. 9/30/06 ELECTRICAL STATE OF CALIFORNIA

PB POWER, Inc.
A Parsons Brinckerhoff Company
303 Second St., Suite 700N
San Francisco, CA 94107-1317

The State of California or its officers or agents shall not be responsible for the accuracy or completeness of electronic copies of this plan sheet.

Caltrans now has a web site! To get to the web site, go to http://www.dot.ca.gov

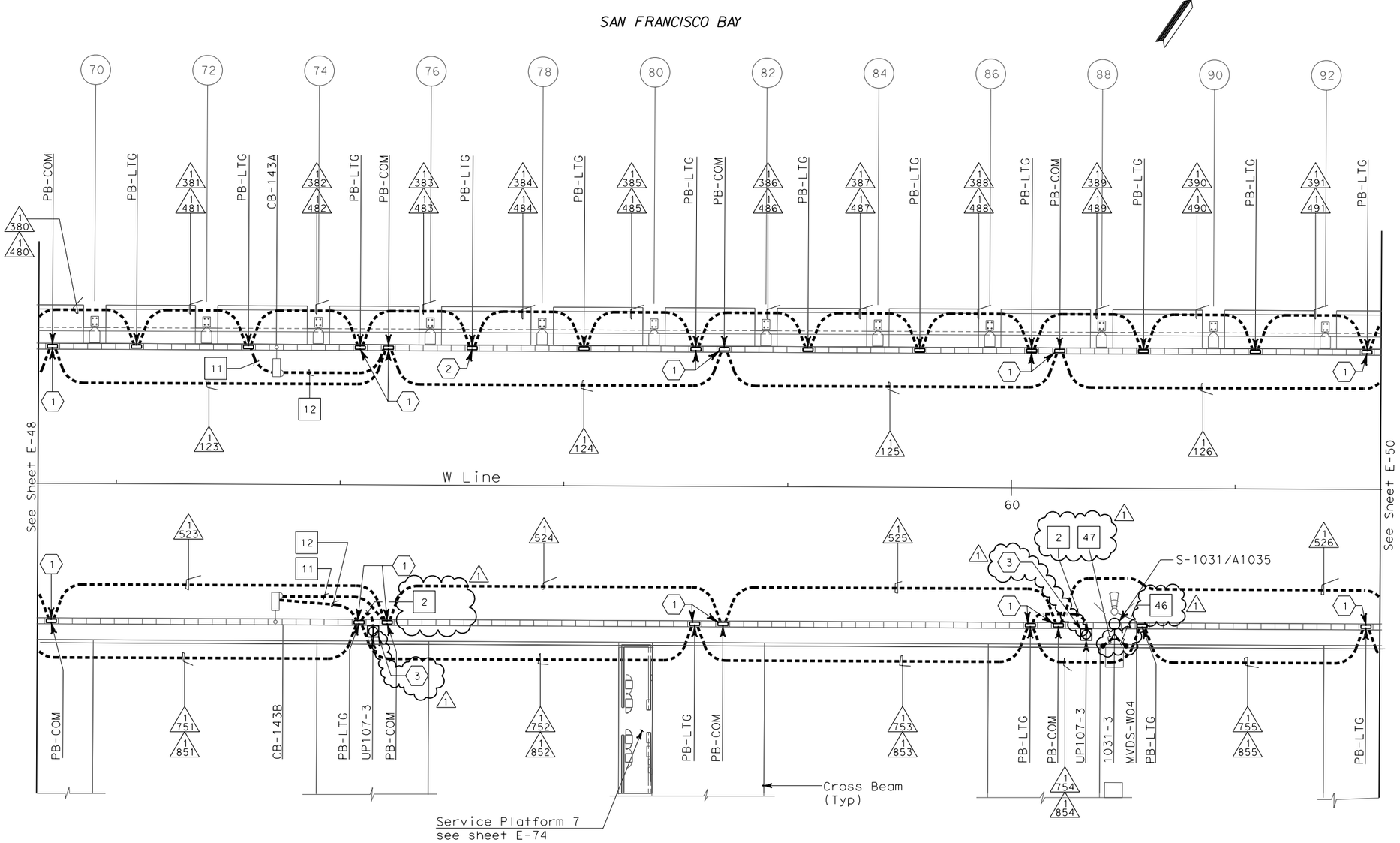

CONDUIT PLAN

SHEET NOTES:

1. Conduit from barrier pullbox or other equipment down into Girder, See sheet E-99.
2. For conduit to Suspend Lighting, See sheet E-229. Typ for all PB-LTG located on the north side of the roadway.
3. Roadway Barrier Receptacle, see Detail 1, sheet E-68.

NOTES:

1. References:
   - For typical details and locations of conduit connections to light poles, barrier outlet boxes, call boxes, overhead sign lighting, CCTV and MVDS, see E-66, E-67 and E-68.
   - TOS equipment is shown for conduit routing only. For typical details of TOS controller and devices, see sheet E-344 through E-357.
   - For types of pullboxes, splice boxes and enclosures, see sheet E-83.
   - For circuit and conduit/cable tray schedules, see sheets starting at E-401.
2. For Roadway Call Boxes refer to sheet E-396.
3. For Roadway Level Lighting Pole Schedules, see sheet E-82.
4. For Roadway Level Call Box Schedule, see sheet E-397.
5. For number of lighting fixtures (main tower lights), see lighting schedule sheets E-271 and E-272.
6. See sheets E-66 thru E-68 for conduit locations.

REGISTERED PROFESSIONAL ENGINEER MAXWELL FUMIO TAKAKI No. E 8651 Exp. 9/30/2008 ELECTRICAL STATE OF CALIFORNIA

FOR REVISION ONLY

REQUEST FOR INFORMATION NOT ADDRESSED IN THIS CCO REMAIN IN FORCE

MARK	DATE	DESCRIPTIONS	BY	CH'D	CCO#
1	02/19/08	ELECTRICAL MODIFICATIONS	MP EL	RR	42

REVISIONS

CONTRACT CHANGE ORDER NO._____
SHEET _____ OF _____

SAS SUPERSTRUCTURE ROADWAY WESTBOUND
LIGHTING AND ELECTRICAL SYSTEMS

SCALE 1:200

E-49

THIS PLAN IS ACCURATE FOR ELECTRICAL WORK ONLY.

STATE OF CALIFORNIA - DEPARTMENT OF TRANSPORTATION
Caltrans

DESIGN OVERSIGHT: BEHZAD GOLEMOHAMMADI

CALCULATED/ DESIGNED BY	FK	DATE 8/02	REVISED BY
CHECKED BY	IAH	8/02	DATE REVISED

DATE PLOTTED => 4/4/2008
TIME PLOTTED => 3:06:48 PM
LAST REVISION 00-00-00

FOR REDUCED PLANS ORIGINAL SCALE IS IN MILLIMETERS 0 20 40 60 80

DGN FILE =>T:\13103\MS\pse\SAS Struc\CCO\SAS CC042\04-0120f1_0120R01.dgn
USERNAME =>llorico

CU 04251

EA 0120F1

DIST	COUNTY	ROUTE	KILOMETER POST TOTAL PROJECT	SHEET No	TOTAL SHEETS
04	SF	80	13.2/13.9	121R1	1204

REGISTERED ELECTRICAL ENGINEER 12/19/02 DATE

12-6-04
PLANS APPROVAL DATE

REGISTERED PROFESSIONAL ENGINEER JENS ERLINGSSON No. 8249 Exp. 9/30/06 ELECTRICAL STATE OF CALIFORNIA

PB POWER, Inc.
A Parsons Brinckerhoff Company
303 Second St., Suite 700N
San Francisco, CA 94107-1317

The State of California or its officers or agents shall not be responsible for the accuracy or completeness of electronic copies of this plan sheet.

Caltrans now has a web site! To get to the web site, go to http://www.dot.ca.gov

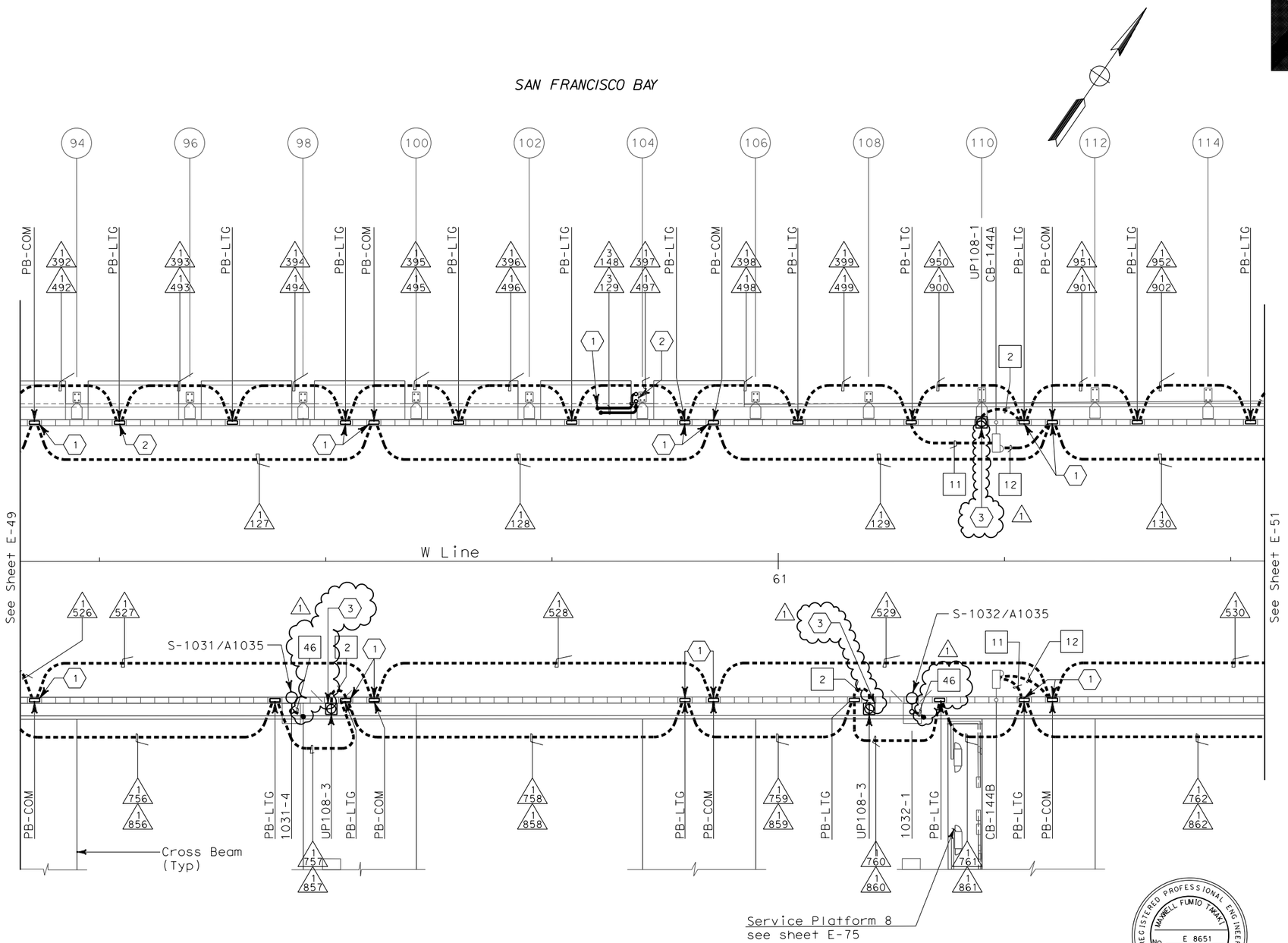

SHEET NOTES:

1. Conduit from barrier pullbox or other equipment down into Girder, See sheet E-100.
2. For conduit to Suspend Lighting, See sheet E-230.
3. Roadway Barrier Receptacle, see Detail 1, sheet E-68.

NOTES:

1. References:
   - For typical details and locations of conduit connections to light poles, barrier outlet boxes, call boxes, overhead sign lighting, CCTV and MVDS, see sheets E-66, E-67 and E-68.
   - TOS equipment is shown for conduit routing only. For typical details of TOS controller and devices, see sheets E-344 through E-357.
   - For types of pullboxes, splice boxes and enclosures, see sheet E-83.
   - For circuit and conduit/cable tray schedules, see sheets starting at E-401.
2. For Roadway Call Boxes refer to sheet E-396.
3. For Roadway Level Lighting Pole Schedules, see sheet E-82.
4. For Roadway Level Call Box Schedule, see sheet E-397.
5. For number of lighting fixtures (main tower lights), see lighting schedule sheets E-271 and E-272.

CONDUIT PLAN

REGISTERED PROFESSIONAL ENGINEER MAXWELL FUMIO TAKAKI No. E 8651 Exp. 9/30/2008 ELECTRICAL STATE OF CALIFORNIA

FOR REVISION ONLY

REQUEST FOR INFORMATION NOT ADDRESSED IN THIS CCO REMAIN IN FORCE

MARK	DATE	DESCRIPTIONS	BY	CH'D	CCO#
1	02/19/08	ELECTRICAL MODIFICATIONS	MP EL	RR	42

REVISIONS

CONTRACT CHANGE ORDER NO._____
SHEET _____ OF _____

SAS SUPERSTRUCTURE ROADWAY WESTBOUND
LIGHTING AND ELECTRICAL SYSTEMS

SCALE 1:200

E-50

THIS PLAN IS ACCURATE FOR ELECTRICAL WORK ONLY.

STATE OF CALIFORNIA - DEPARTMENT OF TRANSPORTATION
Caltrans

DESIGN OVERSIGHT: BEHZAD GOLEMOHAMMADI

CALCULATED/DESIGNED BY: FK — DATE 8/02 — REVISED BY
CHECKED BY: IAH — 8/02 — DATE REVISED

LAST REVISION 00-00-00 — DATE PLOTTED => 4/4/2008 — TIME PLOTTED => 3:11:23 PM

FOR REDUCED PLANS ORIGINAL SCALE IS IN MILLIMETERS 0 20 40 60 80

DGN FILE =>T:\13103\MS\pse\SAS Struc\CCO\SAS CC042\04-0120f1_0121R01.dgn
USERNAME =>llorico

CU 04251 — EA 0120F1

DIST	COUNTY	ROUTE	KILOMETER POST TOTAL PROJECT	SHEET No	TOTAL SHEETS
04	SF	80	13.2/13.9	122R1	1204

REGISTERED ELECTRICAL ENGINEER 12/19/02 DATE

12-6-04
PLANS APPROVAL DATE

REGISTERED PROFESSIONAL ENGINEER JENS ERLINGSSON No. 8249 Exp. 9/30/06 ELECTRICAL STATE OF CALIFORNIA

PB POWER, Inc.
A Parsons Brinckerhoff Company
303 Second St., Suite 700N
San Francisco, CA 94107-1317

The State of California or its officers or agents shall not be responsible for the accuracy or completeness of electronic copies of this plan sheet.

Caltrans now has a web site! To get to the web site, go to http://www.dot.ca.gov

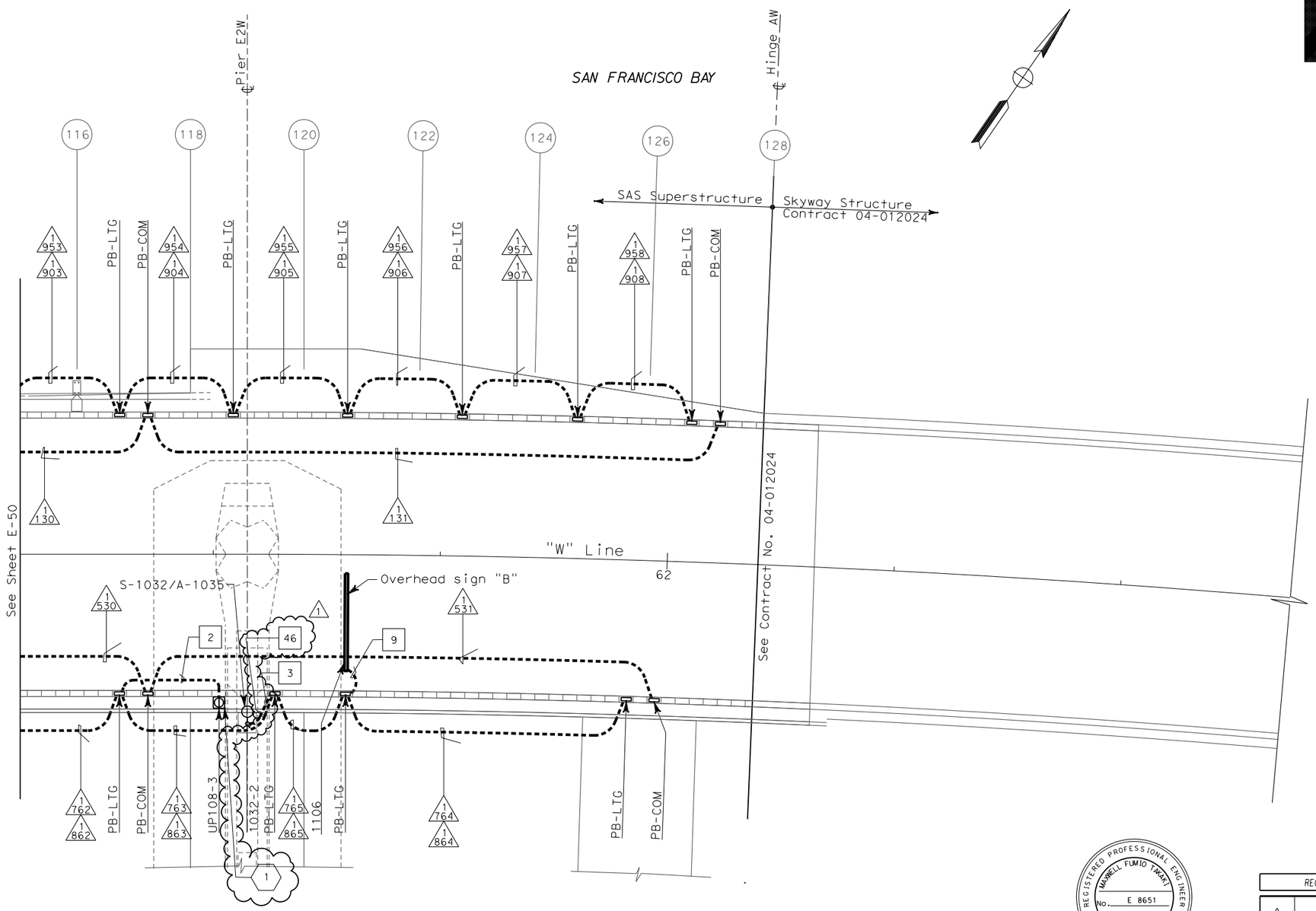

CONDUIT PLAN

SHEET NOTES:

1 (1) Roadway Barrier Receptacle, see Detail 1, sheet E-68.

NOTES:

1. References:
   - For typical details and locations of conduit connections to light poles, barrier outlet boxes, call boxes, overhead sign lighting, CCTV and MVDS, see sheets E-66, E-67 and E-68.
   - TOS equipment is shown for conduit routing only. For typical details of TOS controller and devices, see sheets E-344 through E-357.
   - For types of pullboxes, splice boxes and enclosures, see sheet E-83.
   - For circuit and conduit/cable tray schedules, see sheets starting at E-401.
2. For roadway level lighting pole schedules, see sheet E-82.

REGISTERED PROFESSIONAL ENGINEER MARNELL FUMIO TAKAKI No. E 8651 Exp. 9/30/2008 ELECTRICAL STATE OF CALIFORNIA

FOR REVISION ONLY

REQUEST FOR INFORMATION NOT ADDRESSED IN THIS CCO REMAIN IN FORCE

MARK	DATE	DESCRIPTIONS	BY	CH'D	CCO#
1	02/19/08	ELECTRICAL MODIFICATIONS	MP EL	RR	42

REVISIONS

CONTRACT CHANGE ORDER NO._____
SHEET _____ OF _____

SAS SUPERSTRUCTURE ROADWAY WESTBOUND
LIGHTING AND ELECTRICAL SYSTEMS

SCALE 1:200

THIS PLAN IS ACCURATE FOR ELECTRICAL WORK ONLY.

E-51

REVISED BY	DATE REVISED
FK	IAH
DATE 8/02	8/02

CALCULATED/DESIGNED BY FK
CHECKED BY IAH

DESIGN OVERSIGHT
BEHZAD GOLEMOHAMMADI

STATE OF CALIFORNIA - DEPARTMENT OF TRANSPORTATION
Caltrans

LAST REVISION 00-00-00
DATE PLOTTED => 4/4/2008
TIME PLOTTED => 3:12:34 PM

FOR REDUCED PLANS ORIGINAL SCALE IS IN MILLIMETERS 0 20 40 60 80

DGN FILE =>T:\13103\MS\pse\SAS Struc\CCO\SAS CCO42\04-0120f1_0122R01.dgn
USERNAME =>llorico

CU 04251

EA 0120F1

DIST	COUNTY	ROUTE	KILOMETER POST TOTAL PROJECT	SHEET No	TOTAL SHEETS
04	SF	80	13.2/13.9	123R1	1204

Caltrans Metric

REGISTERED ELECTRICAL ENGINEER 12/19/02 DATE

12-6-04
PLANS APPROVAL DATE

REGISTERED PROFESSIONAL ENGINEER JENS ERLINGSSON No. 8249 Exp. 9/30/06 ELECTRICAL STATE OF CALIFORNIA

PB POWER, Inc.
A Parsons Brinckerhoff Company
303 Second St., Suite 700N
San Francisco, CA 94107-1317

The State of California or its officers or agents shall not be responsible for the accuracy or completeness of electronic copies of this plan sheet.

Caltrans now has a web site! To get to the web site, go to http://www.dot.ca.gov

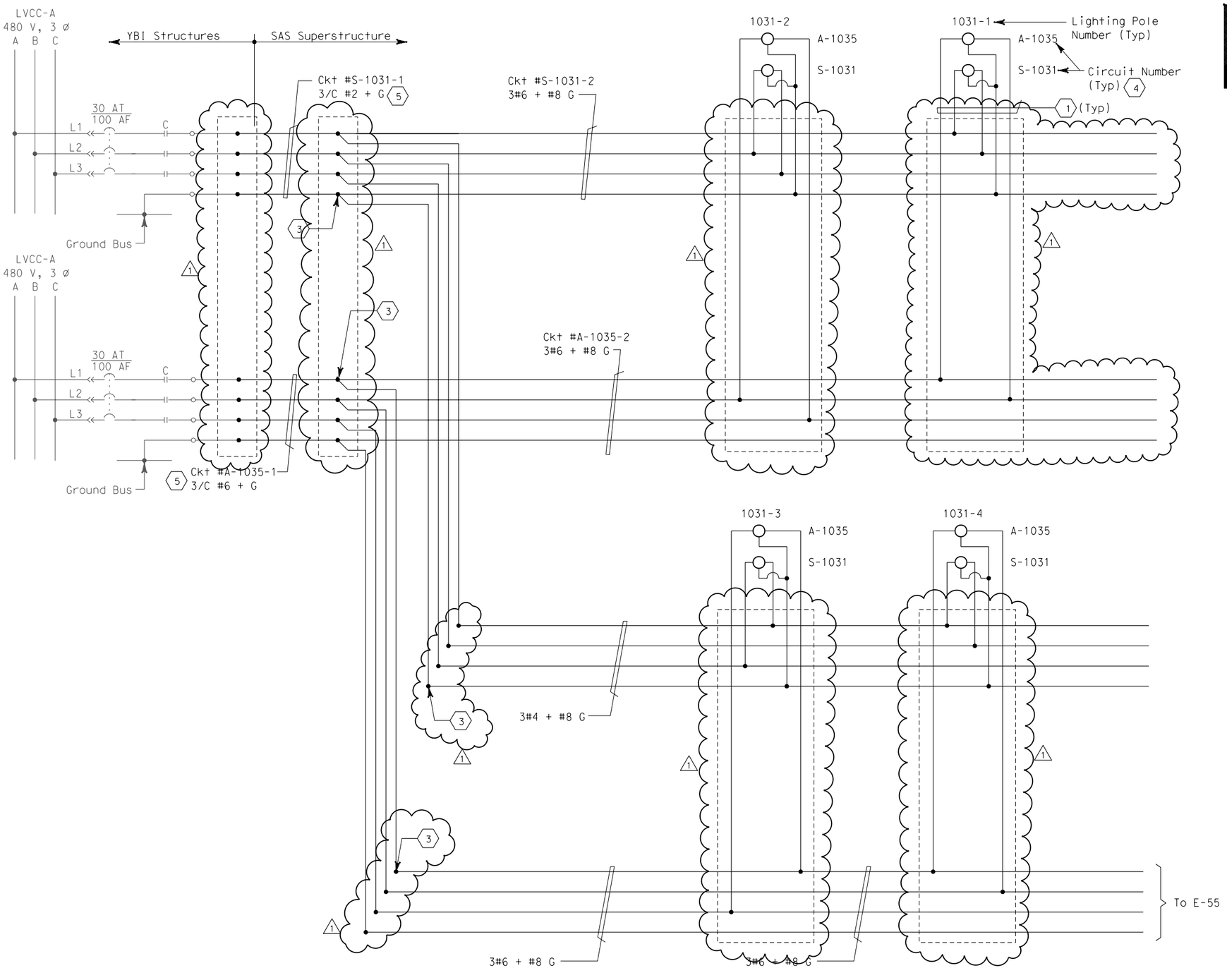

SHEET NOTES:

1. 4#10 + #10 G single conductors.
2. Deleted.
3. Conductors spliced inside junction box PB-2A located inside girder.
4. For SAS Superstructure roadway westbound lighting schedule, see sheet E-82.
5. The Contractor shall extend and coil 5 meters of cable in manhole 25. All cables shall be tagged with circuit numbers as shown. For location of manhole 25, see sheet E-11.

NOTES:

1. References:
   - For pull box schedule, see sheet E-83.
   - For circuit and conduit/cable tray schedules, see sheets starting at E-401.

REQUEST FOR INFORMATION NOT ADDRESSED IN THIS CCO REMAIN IN FORCE

MARK	DATE	DESCRIPTIONS	BY	CH'D	CCO#
1	02/19/08	ELECTRICAL MODIFICATIONS	MP EL	RR	42

REVISIONS

CONTRACT CHANGE ORDER NO._____
SHEET _____ OF _____

REGISTERED PROFESSIONAL ENGINEER MAXWELL FUMIO TAKAKI No. E 8651 Exp. 9/30/2008 ELECTRICAL STATE OF CALIFORNIA

FOR REVISION ONLY

DETAILS
SAS SUPERSTRUCTURE ROADWAY WESTBOUND
480 V ROADWAY LIGHTING WIRING DIAGRAM

NO SCALE

E-54

STATE OF CALIFORNIA - DEPARTMENT OF TRANSPORTATION
Caltrans

DESIGN OVERSIGHT: BEHZAD GOLEMOHAMMADI

CALCULATED/DESIGNED BY: JP | DATE: 08/01 | REVISED BY
CHECKED BY: JE | 12/01 | DATE REVISED

DATE PLOTTED => 5/9/2008
TIME PLOTTED => 2:03:28 PM
LAST REVISION 00-00-00

FOR REDUCED PLANS ORIGINAL SCALE IS IN MILLIMETERS 0 20 40 60 80

DGN FILE =>T:\13103\MS\pse\SAS Struc\CCO\SAS CCO42\04-0120f1_0123R01.dgn
USERNAME =>llorico

CU 04251 | EA 0120F1

DIST	COUNTY	ROUTE	KILOMETER POST TOTAL PROJECT	SHEET No	TOTAL SHEETS
04	SF	80	13.2/13.9	124R1	1204

REGISTERED ELECTRICAL ENGINEER 12/19/02 DATE

12-6-04
PLANS APPROVAL DATE

REGISTERED PROFESSIONAL ENGINEER JENS ERLINGSSON No. 8249 Exp. 9/30/06 ELECTRICAL STATE OF CALIFORNIA

PB POWER, Inc.
A Parsons Brinckerhoff Company
303 Second St., Suite 700N
San Francisco, CA 94107-1317

The State of California or its officers or agents shall not be responsible for the accuracy or completeness of electronic copies of this plan sheet.

Caltrans now has a web site! To get to the web site, go to http://www.dot.ca.gov

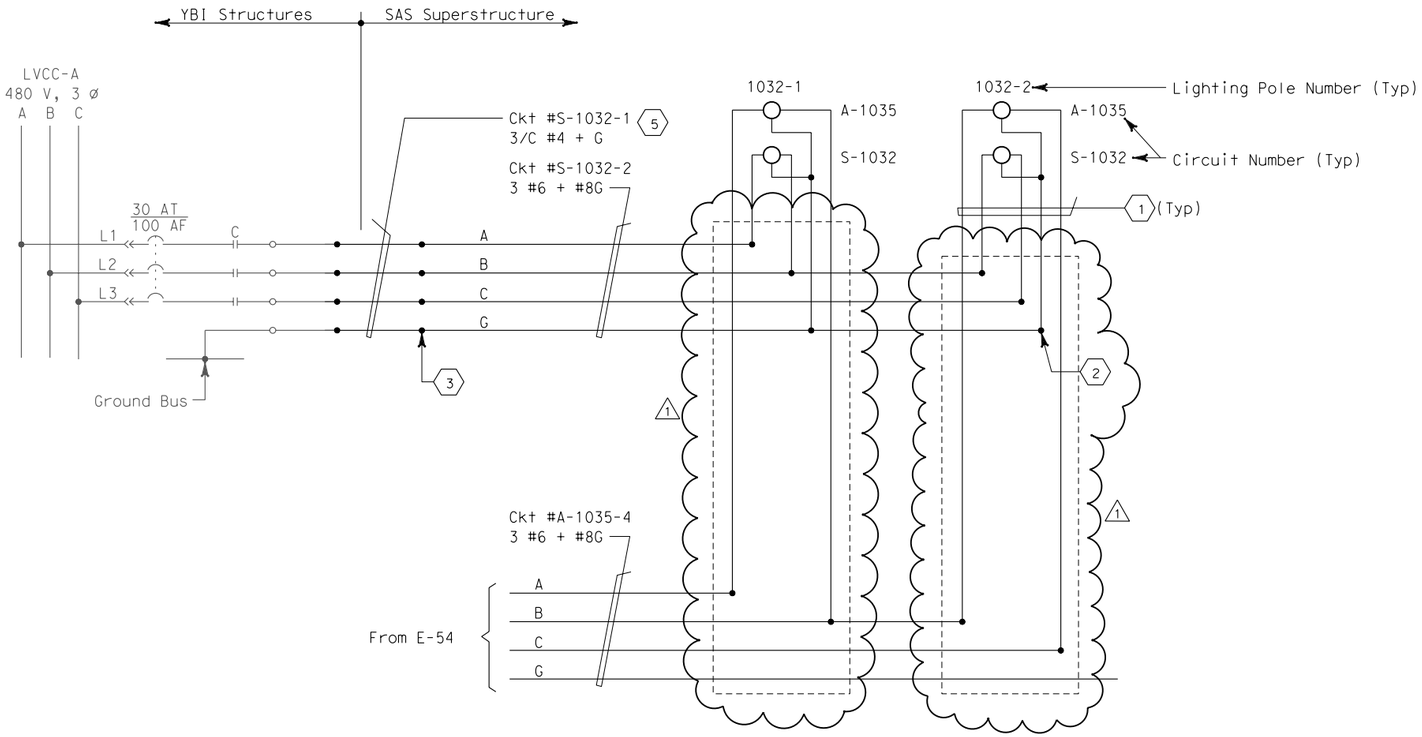

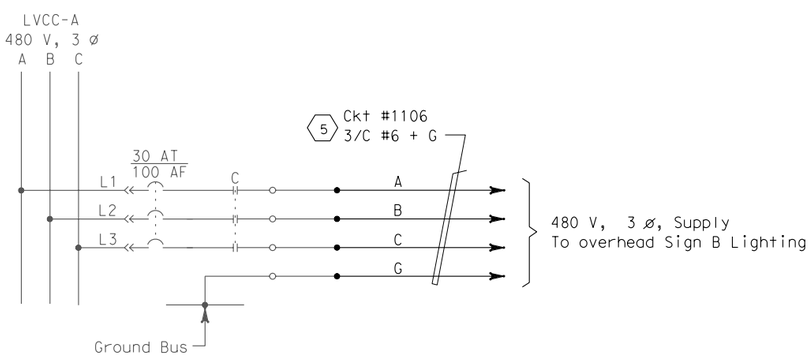

480 V OVERHEAD SIGN

SHEET NOTES:

1. 4#10 + #10 G single conductors.
2. Conductors ~~spliced inside pull~~ box PB-LTG. (Pole #1032-2 only). △1
3. Conductors spliced inside junction box PB-2A located inside girder.
4. For SAS superstructure roadway westbound lighting schedule, see sheet E-82.
5. The Contractor shall extend and coil 5 meters of cable in manhole 25. All cables shall be tagged with circuit numbers as shown. For location of manhole 25, see sheet E-11.

NOTES:

1. References:
   - For pull box schedule, see sheet E-83.
   - For circuit and conduit/cable tray schedules, see sheets starting at E-401.
   - For single line diagram, see sheets E-29 through E-34.

REGISTERED PROFESSIONAL ENGINEER MANNELL FUMIO TAKAKI No. E 8651 Exp. 9/30/2008 ELECTRICAL STATE OF CALIFORNIA

FOR REVISION ONLY

REQUEST FOR INFORMATION NOT ADDRESSED IN THIS CCO REMAIN IN FORCE

MARK	DATE	DESCRIPTIONS	BY	CH'D	CCO#
△1	02/19/08	ELECTRICAL MODIFICATIONS	MP EL	RR	42

REVISIONS

CONTRACT CHANGE ORDER NO._____
SHEET _____ OF _____

DETAILS
SAS SUPERSTRUCTURE ROADWAY WESTBOUND
480 V ROADWAY LIGHTING WIRING DIAGRAM
NO SCALE

E-55

REVISED BY	DATE REVISED
JP	08/01
JE	12/01

CALCULATED/DESIGNED BY
CHECKED BY

DESIGN OVERSIGHT
BEHZAD GOLEMOHAMMADI

STATE OF CALIFORNIA - DEPARTMENT OF TRANSPORTATION
Caltrans

LAST REVISION 00-00-00
DATE PLOTTED => 4/4/2008
TIME PLOTTED => 3:18:30 PM

FOR REDUCED PLANS ORIGINAL SCALE IS IN MILLIMETERS 0 20 40 60 80

DGN FILE =>T:\13103\MS\pse\SAS Struc\CCO\SAS CCO42\04-0120f1_0124R01.dgn
USERNAME =>llorico

CU 04251

EA 0120F1

DIST	COUNTY	ROUTE	KILOMETER POST TOTAL PROJECT	SHEET No	TOTAL SHEETS
04	SF	80	13.2/13.9	132R2	1204

REGISTERED ELECTRICAL ENGINEER 12/19/02 DATE

12-6-04
PLANS APPROVAL DATE

REGISTERED PROFESSIONAL ENGINEER JENS ERLINGSSON No. 8249 Exp. 9/30/06 ELECTRICAL STATE OF CALIFORNIA

PB POWER, Inc.
A Parsons Brinckerhoff Company
303 Second St., Suite 700N
San Francisco, CA 94107-1317

The State of California or its officers or agents shall not be responsible for the accuracy or completeness of electronic copies of this plan sheet.

Caltrans now has a web site! To get to the web site, go to http://www.dot.ca.gov

Caltrans Metric

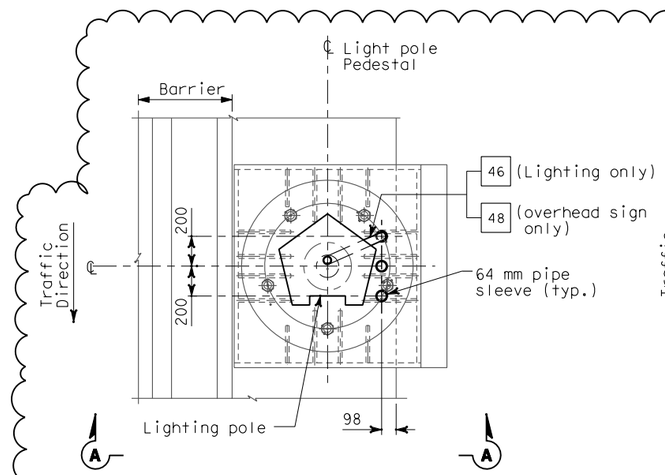

PLAN

CONDUIT STUB-UP PLAN FOR ROADWAY LIGHTING ON A METAL BASE (SIMILAR FOR OVERHEAD SIGN ON A METAL BASE EXCEPT AS NOTED)
SCALE 1:20

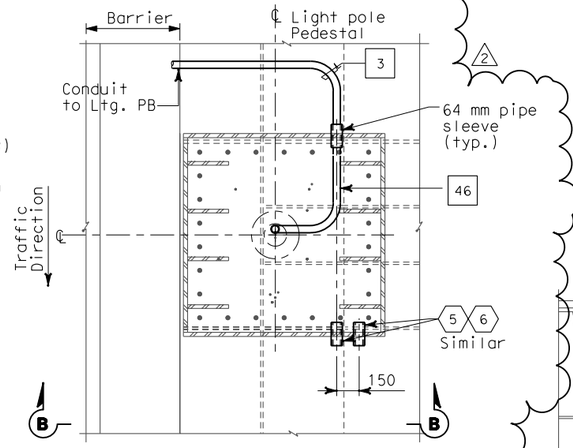

PLAN

CONDUIT STUB-UP PLAN FOR ROADWAY LIGHTING ON A METAL BASE AT PIER E2 ONLY
SCALE 1:20

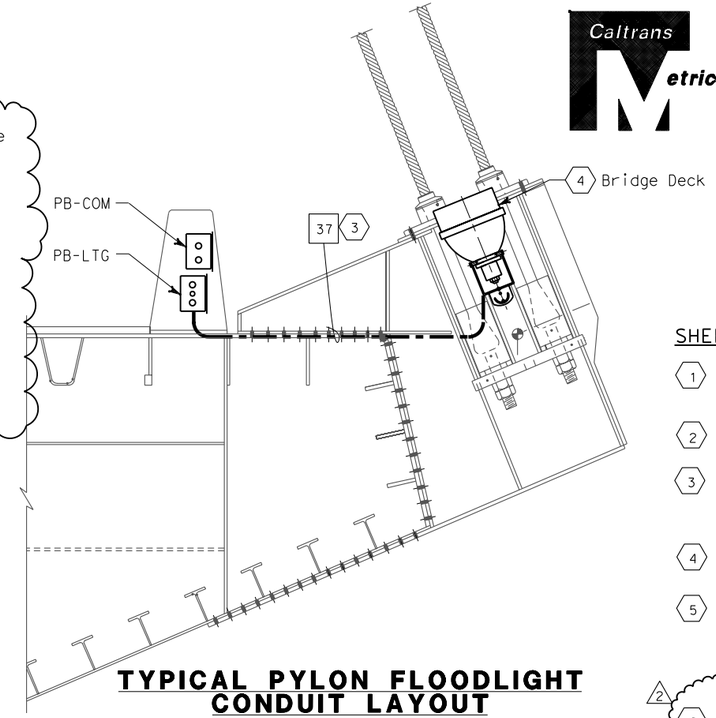

TYPICAL PYLON FLOODLIGHT CONDUIT LAYOUT

SCALE 1:20

SHEET NOTES:

1. Bond grounding bushing to ground lug of lighting pole with #6 bare copper wire.
2. Conduits for future light pipe shall continue from this pull box.
3. Conduit shall be clear of all piping and pipe sleeves. Route conduit on top of deck plate, outside of girder box.
4. For pylon floodlighting layout, see sheets E-47 & E-48.
5. See Utility Detail No. 1 (Sheet No. 965 of 1204) for conduit penetration through girder plate and lighting pole metal base. The Contractor shall install sealant between the sleeve and conduit to prevent water or moisture from passing inside the sleeve.
6. Cap spare sleeves for future use where noted.

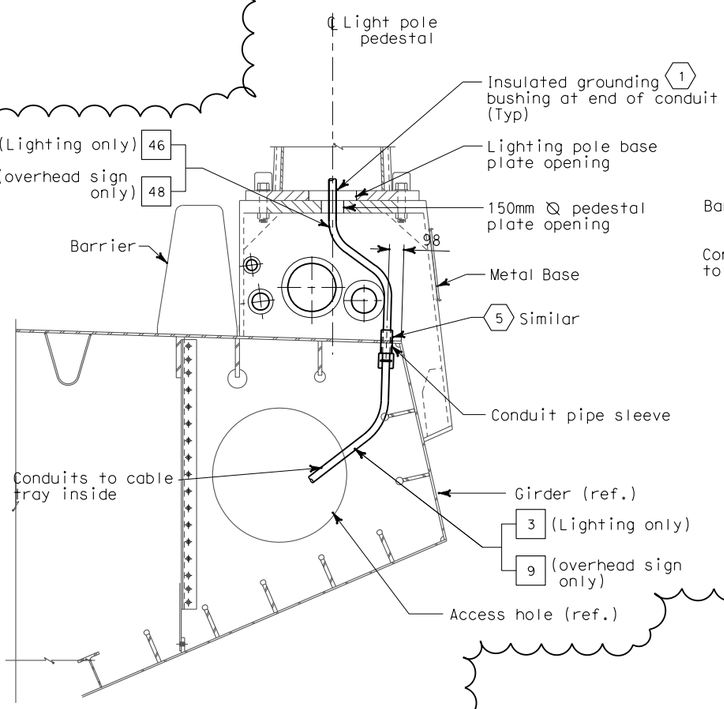

SECTION A-A

LIGHT POLE METAL PEDESTAL CONDUIT TYPICAL INSTALLATION
SCALE 1:20

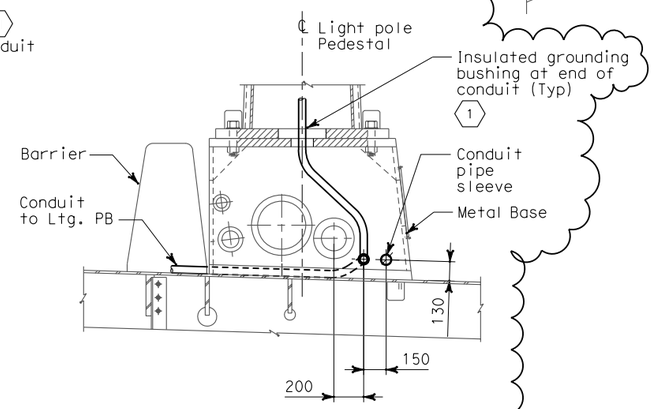

SECTION B-B

SCALE 1:20

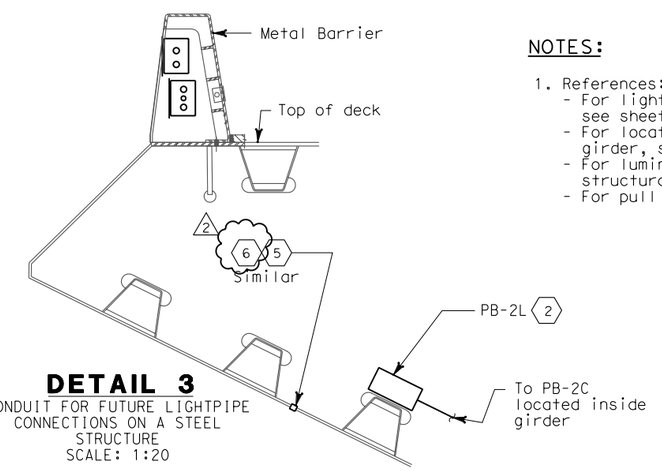

DETAIL 3

CONDUIT FOR FUTURE LIGHTPIPE CONNECTIONS ON A STEEL STRUCTURE
SCALE: 1:20

NOTES:

1. References:
   - For lighting pole schedule, see sheet E-82.
   - For location of pull boxes inside girder, see sheets E-96 thru E-101.
   - For luminaire support details, see structural sheets.
   - For pull box schedule, see sheet E-83.

REGISTERED PROFESSIONAL ENGINEER TAMMELL FUMIO TAKAKI No. E 8651 Exp. 9/30/2008 ELECTRICAL STATE OF CALIFORNIA

FOR REVISION ONLY

REQUEST FOR INFORMATION NOT ADDRESSED IN THIS CCO REMAIN IN FORCE

MARK	DATE	DESCRIPTIONS	REV	CH'D	CCO#
2	02/19/08	ELECTRICAL MODIFICATIONS	MP EL RG	RR	42
1	10/16/06	REVISED SHEET NOTES	LR	MG	11

REVISIONS

CONTRACT CHANGE ORDER NO._____
SHEET_____ OF _____

DETAILS
SAS SUPERSTRUCTURE ROADWAY WESTBOUND CONDUIT LOCATIONS

SCALE AS NOTED

E-67

DATE	REVISED BY
10/01	KG
11/01	AB

CALCULATED/DESIGNED BY
CHECKED BY

DESIGN OVERSIGHT
BEHZAD GOLEMOHAMMADI

STATE OF CALIFORNIA - DEPARTMENT OF TRANSPORTATION
Caltrans

LAST REVISION 00-00-00
DATE PLOTTED => 5/9/2008
TIME PLOTTED => 2:04:21 PM

FOR REDUCED PLANS ORIGINAL SCALE IS IN MILLIMETERS 0 20 40 60 80

DGN FILE =>T:\13103\MS\pse\SAS Struc\CCO\SAS CCO42\04-0120f1_0132R02.dgn
USERNAME =>llorico

CU 04251

EA 0120F1

DIST	COUNTY	ROUTE	KILOMETER POST TOTAL PROJECT	SHEET No	TOTAL SHEETS
04	SF	80	13.2/13.9	133R2	1204

REGISTERED ELECTRICAL ENGINEER 12/19/02 DATE

12-6-04
PLANS APPROVAL DATE

REGISTERED PROFESSIONAL ENGINEER JENS ERLINGSSON No. 8249 Exp. 9/30/06 ELECTRICAL STATE OF CALIFORNIA

PB POWER, Inc.
A Parsons Brinckerhoff Company
303 Second St., Suite 700N
San Francisco, CA 94107-1317

The State of California or its officers or agents shall not be responsible for the accuracy or completeness of electronic copies of this plan sheet.

Caltrans now has a web site! To get to the web site, go to http://www.dot.ca.gov

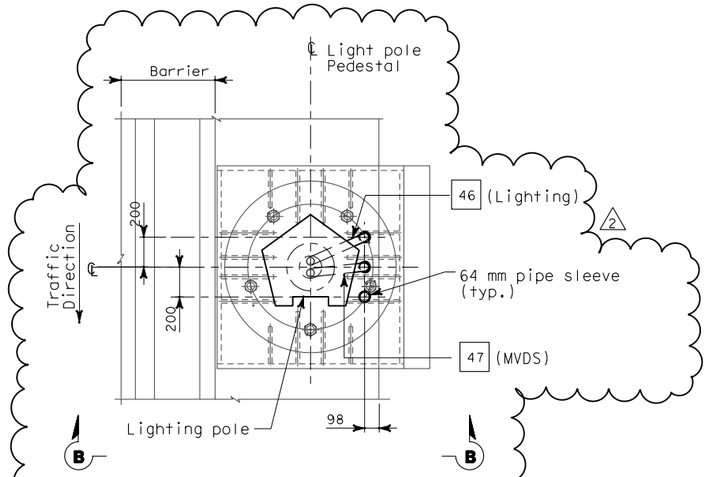

PLAN
CONDUIT STUB-UP PLAN FOR ROADWAY LIGHTING, AND MVDS ON METAL BASE
SCALE 1:20

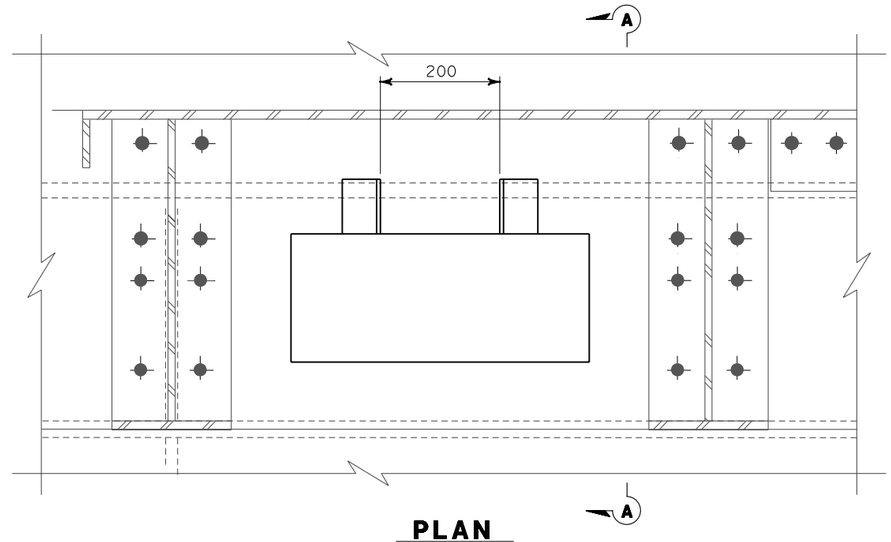

PLAN
PULL BOX IN STEEL BARRIER
SCALE 1:5

SHEET NOTES:

1. Bond grounding bushing to ground lug of lighting pole or overhead sign post with #6 bare copper wire.
2. Deleted
3. See Utility Detail No. 1 (Sheet No. 965 of 1204) for conduit penetration through girder plate and lighting pole metal base. The Contractor shall install sealant between the sleeve and conduit to prevent water or moisture from passing inside the sleeve.
4. Ensure that the maximum of three conduits passing through the 150 mm ø pedestal plate opening are separated as much as possible from each other.

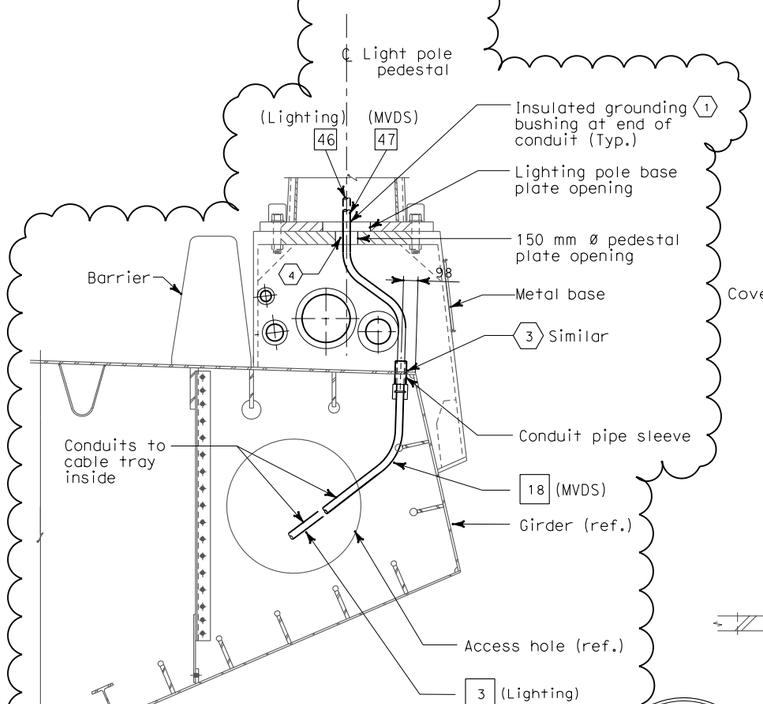

SECTION B-B
SCALE 1:20

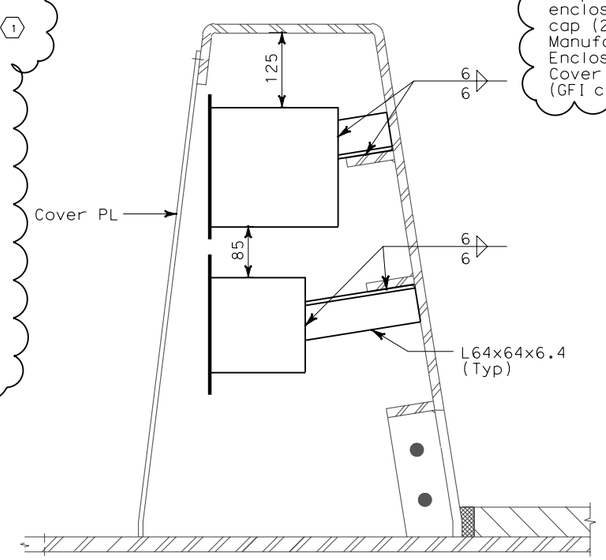

SECTION A-A
SCALE 1:5

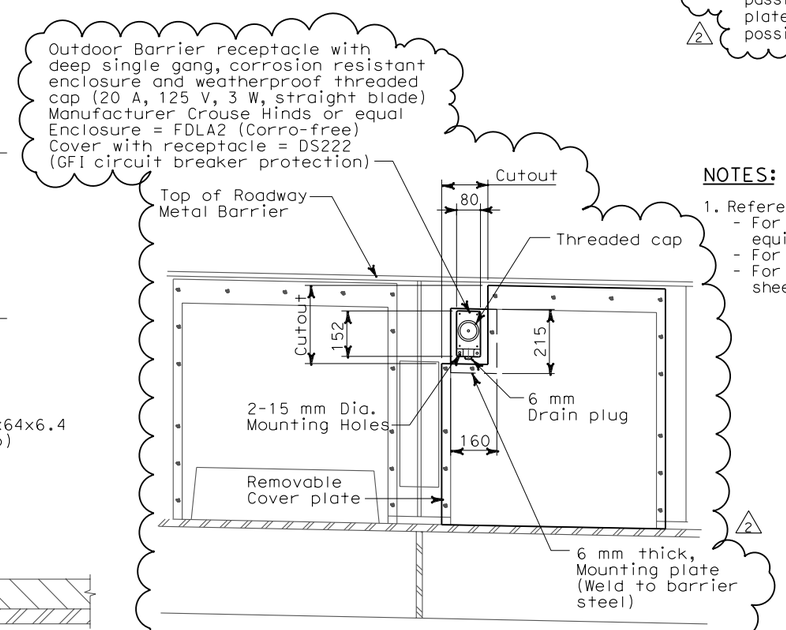

DETAIL 1
(TYPICAL ROADWAY BARRIER RECEPTACLE LOCATION)
SCALE: 1:10

NOTES:

1. References:
   - For installation and typical details of TOS equipment, see sheets E-344 thru E-357.
   - For pull box schedule, see sheet E-83.
   - For TOS field element locations, see sheet E-341.

REGISTERED PROFESSIONAL ENGINEER MARNELL FUMIO TAKAKI No. E 8651 Exp. 9/30/2008 ELECTRICAL STATE OF CALIFORNIA

REGISTERED ELECTRICAL ENGINEER
FOR REVISION ONLY

REQUEST FOR INFORMATION NOT ADDRESSED IN THIS CCO REMAIN IN FORCE

MARK	DATE	DESCRIPTIONS	REV	CH'D	CCO#
2	02/19/08	ELECTRICAL MODIFICATIONS	MP EL RG	RR	42
1	10/16/06	REVISED SHEET NOTES	LR	MG	11

REVISIONS

CONTRACT CHANGE ORDER NO._____
SHEET _____ OF _____

DETAILS
SAS SUPERSTRUCTURE ROADWAY WESTBOUND CONDUIT LOCATIONS
SCALE AS NOTED

E-68

DATE	REVISED BY	CALCULATED/ DESIGNED BY	DESIGN OVERSIGHT
10/01	KG		
11/01	AB	CHECKED BY	BEHZAD GOLEMOHAMMADI

STATE OF CALIFORNIA - DEPARTMENT OF TRANSPORTATION

FOR REDUCED PLANS ORIGINAL SCALE IS IN MILLIMETERS 0 20 40 60 80

DGN FILE =>T:\13103\MS\pse\SAS Struc\CCO\SAS CCO42\Issued to Caltrans 2008.05.09_do not revise\04-0120f1_0133R02.dgn
USERNAME =>llorico
CU 04251 EA 0120F1

LAST REVISION 00-00-00 DATE PLOTTED => 5/16/2008 TIME PLOTTED => 4:54:51 PM

DIST	COUNTY	ROUTE	KILOMETER POST TOTAL PROJECT	SHEET No	TOTAL SHEETS
04	SF	80	13.2/13.9	141R1	1204

REGISTERED ELECTRICAL ENGINEER 12/19/02 DATE

12-6-04
PLANS APPROVAL DATE

REGISTERED PROFESSIONAL ENGINEER JENS ERLINGSSON No. 8249 Exp. 9/30/06 ELECTRICAL STATE OF CALIFORNIA

PB POWER, Inc.
A Parsons Brinckerhoff Company
303 Second St., Suite 700N
San Francisco, CA 94107-1317

The State of California or its officers or agents shall not be responsible for the accuracy or completeness of electronic copies of this plan sheet.

Caltrans now has a web site! To get to the web site, go to http://www.dot.ca.gov

Caltrans Metric

PIER 1 TOWER LIGHTS SCHEDULE (ROADWAY LEVEL)

Circuit Number	Station	Location: Roadway side	Location: Suspend at Panel Point	Mounting	Ltg. Fixture Type	Number/ Wattage	Remarks
PYLON LIGHTING							
A-3009	57+43	South	PP-35/36	Bridge deck	MAT-1B-D	2-1000 W	with Remote Ballast
A-3009	57+45	South	PP-36	Bridge deck	MAT-1C-D	1-1000 W	with Remote Ballast
A-3009	57+51	South	PP-36/37	Bridge deck (1)	MAT-1A-D	2-1000 W	with Remote Ballast
A-3009	57+64	South	PP-39	Crossbeam top	MAT-3-D	2-250 W	with Remote Ballast
A-3009	57+69	South	PP-40	Crossbeam side	MAT-3-RC	2-250 W	with Remote Ballast
A-3009	57+75.5	North	West of PP-42	Bridge deck	MAT-1A-D	2-1000 W	with Remote Ballast
A-3010	58+14	South	PP-48/49	Bridge deck	MAT-1B-D	2-1000 W	with Remote Ballast
A-3010	58+12	South	PP-48	Bridge deck	MAT-1C-D	1-1000 W	with Remote Ballast
A-3010	58+06	South	PP-47/48	Bridge deck (1)	MAT-1A-D	2-1000 W	with Remote Ballast
A-3010	57+93	South	PP-45	Crossbeam top	MAT-3-D	2-250 W	with Remote Ballast
A-3010	57+88	South	PP-44	Crossbeam side	MAT-3-RC	2-250 W	with Remote Ballast
A-3010	57+80.5	North	East of PP-42	Bridge deck	MAT-1A-D	2-1000 W	with Remote Ballast

(1) (1)

LIGHTING POLE SCHEDULE

Circuit Number	Pole Number	Station	Location: Roadway side	Location: Suspend at Panel Point	Mounting Height (M) (1)	Ltg. Fixture Type	Number/ Wattage	Remarks (Mounting Provisions) (1)
S-1031	1031-1	55+98	South	-	20	MSR-2B-L	3-400 W	Pole mounted
A-1035						MAM-3	1-250 W	
S-1031	1031-2	56+38	South	-	20	MSR-2B-L	3-400 W	Pole mounted
A-1035						MAM-3	1-250 W	
S-1031	1031-3	60+08	South	-	20	MSR-2-L	2-400 W	Pole mounted
S-1031						MSR-2B-L	3-400 W	
A-1035						MAM-3	1-250 W	
S-1031	1031-4	60+58	South	-	20	MSR-2-L	2-400 W	Pole mounted
S-1031						MSR-2B-L	2-400 W	
A-1035						MAM-3	1-250 W	
S-1032	1032-1	61+10	South	-	20	MSR-2-L	2-400 W	Pole mounted
S-1032						MSR-2B-L	2-400 W	
A-1035						MAM-3	1-250 W	
S-1032	1032-2	61+63	South	-	20	MSR-2-L	2-400 W	Pole mounted
S-1032						MSR-2B-L	2-400 W	
A-1035						MAM-3	1-250 W	

(1)

LIGHTING FIXTURE TYPE DESIGNATION

Example: MSR-2B-C (See Special provisions for additional information)
MSR = SAS Safety light
2 = 400 Watts
B = Beam Angles
C = Cable Mounting Type

Location (Letter)		Function (Letter)		Application (Letter)		Number/ Lamp Wattage		Beam Angles (Letter)		Mounting Type (Letter)	
M	SAS	A	Aesthetic light	D	Downward flood light	1	1000 W	A		C	Cable
		S	Safety light	U	Upward flood light	2	400 W	B		D	Roadway deck
				R	Roadway light	3	250 W	C		PB	Pier Base/ Pole mount
				T	Pylon flood light	4	175 W			RC	Roadway at Cross beam
				M	Marker light	5	100 W			P	Pole mounted without lower/raiser
				P	Pylon marker light	6	50 W			L	Pole mounted with lower/raiser
				B	Bike path light						
				V	Belvedere light						
				L	Light pipe						

SHEET NOTE:

(1) Pole mounted lighting fixture 12 m and higher is provided with lowering device.

NOTES:

1. For Roadway Level Lighting Wiring Diagrams see sheets E-54 thru E-55.
2. For Roadway Level Lighting Conduit Plan see sheets E-46 thru E-51.
3. For type of Roadway poles. Refer to Sheets E-85 thru E-89.

REGISTERED PROFESSIONAL ENGINEER MANDELL FUMIO TAKAKI No. E 8651 Exp. 9/30/2008 ELECTRICAL STATE OF CALIFORNIA

FOR REVISION ONLY

REQUEST FOR INFORMATION NOT ADDRESSED IN THIS CCO REMAIN IN FORCE

MARK	DATE	DESCRIPTIONS	BY	CH'D	CCO#
1	02/19/08	ELECTRICAL MODIFICATIONS	MP EL	RR	42

REVISIONS

CONTRACT CHANGE ORDER NO._____
SHEET _____ OF _____

DETAILS
SAS SUPERSTRUCTURE ROADWAY WESTBOUND LIGHTING SCHEDULES

E-82

DATE	REVISED BY	DATE	REVISED
8/01	JP	12/01	BL

CALCULATED/ DESIGNED BY — CHECKED BY

DESIGN OVERSIGHT — BEHZAD GOLEMOHAMMADI

STATE OF CALIFORNIA - DEPARTMENT OF TRANSPORTATION — Caltrans

LAST REVISION 00-00-00 — DATE PLOTTED => 5/13/2008 TIME PLOTTED => 5:08:02 PM

FOR REDUCED PLANS ORIGINAL SCALE IS IN MILLIMETERS 0 20 40 60 80

DGN FILE =>T:\13103\MS\pse\SAS Struc\CCO\SAS CCO42\04-0120f1_0141R01.dgn
USERNAME =>garciar

CU 04251 — EA 0120F1

DIST	COUNTY	ROUTE	KILOMETER POST TOTAL PROJECT	SHEET No	TOTAL SHEETS
04	SF	80	13.2/13.9	142R1	1204

Caltrans Metric

REGISTERED ELECTRICAL ENGINEER 12/19/02 DATE

12-6-04
PLANS APPROVAL DATE

REGISTERED PROFESSIONAL ENGINEER JENS ERLINGSSON No. 8249 Exp. 9/30/06 ELECTRICAL STATE OF CALIFORNIA

PB POWER, Inc.
A Parsons Brinckerhoff Company
303 Second St., Suite 700N
San Francisco, CA 94107-1317

The State of California or its officers or agents shall not be responsible for the accuracy or completeness of electronic copies of this plan sheet.

Caltrans now has a web site! To get to the web site, go to http://www.dot.ca.gov

PULL BOXES

Location	Type	Pull Box Size	Enclosure Type	Nameplate Pull Box Cover	Remarks
Roadway Barrier	PB-Com			Low Voltage - Call Box	Caltrans standard ES-9C (PB-9A)
Roadway Barrier	PB-Lto			600 V - Electrical	Caltrans standard ES-9C (PB-9)
1 Roadway and miscellaneous	PB-1B	304 L x 254 W x 127 D	NEMA 4X	600 V - Electrical	Located at main suspender cable
Roadway and miscellaneous	PB-1C	152 L x 152 W x 102 D	NEMA 4X	600 V - Electrical	Located at suspender brackets
Inside Girder Box	PB-2A	406 L x 254 W x 152 D	NEMA 12	600 V - Electrical	
Service Platform	PB-2B	762 L x 610 W x 203 D	NEMA 4X	600 V - Electrical	
Inside Girder Box	PB-2C	915 L x 610 W x 610 D	NEMA 12	600 V - Electrical	Electrical vault-embedded in conc. deck
Inside Girder Box	PB-2K	1067 L x 915 W x 305 D	NEMA 12	600 V - Electrical	Electrical vault-surface/pendant mounted
Inside Girder Box	PB-2L	152 L x 152 W x 102 D	NEMA 12	600 V - Electrical	For future light pipe

PULL BOXES

Location	Type	Pull Box Size	Enclosure Type	Nameplate Pull Box Cover	Remarks
"E" Line Girder access Platform	PB-2D	457 L x 457 W x 203 D	NEMA 4X	600 V - Electrical	For Base Tower power and lighting
Inside Dehumidification #2 Area	PB-2E	203 L x 203 W x 102 D	NEMA 12	600 V - Electrical	For Base Tower Dehumidification #2 power
Tower Base-Elevator Enclosure	PB-2F	203 L x 203 W x 102 D	NEMA 12	600 V - Electrical	For Elevator pit motor power
Tower Walkway Platform, EL. 93.35 m	PB-2G	457 L x 457 W x 203 D	NEMA 4X	600 V - Electrical	For Power and Lighting
Tower Walkway Platform, EL. 93.35 m	PB-2H	457 L x 457 W x 203 D	NEMA 4X	600 V - Electrical	For Power and Lighting
Elevator Enclosure-EL. 93.35 m	PB-2J	203 L x 203 W x 102 D	NEMA 4X	600 V - Electrical	For Power and Lighting
"E" Line Girder access Platform	PB-2K	305 L x 305 W x 152 D	NEMA 4X	600 V - Electrical	For Base Tower power and lighting
Tower Walkway Platform, EL. 53.0 m	PB-2R	203 L x 203 W x 102 D	NEMA 4X	600 V - Electrical	For Power - Booster Pump P1
Tower Vertical Runs	PB-4D	915 L x 610 W x 610 D	NEMA 12	600 V - Electrical	

SPLICE BOXES

Location	Type	Splice Box Size	Enclosure Type	Nameplate Splice Box Cover	Remarks
Inside Girder Box and Tower EL 63.0	PB-3A	1830 L x 915 W x 305 D	NEMA 12	Danger - High Voltage - Keep Out	
Inside Girder Box	PB-3B	813 L x 203 diameter	Cylindrical Housing	Fiber Optic	72 fibers to 12 fibers
Inside Girder Box	PB-3C	813 L x 203 diameter	Cylindrical Housing	Fiber Optic	72 fibers to 72 fibers

PANEL ENCLOSURES (1)

Location	Type	Cabinet/Terminal Box Size	Enclosure Type	Nameplate Cabinet/Terminal Cover	Remarks
Service Platform	PB-6C	See Panel Layout	NEMA 4X	See Panel Layout on E-305	For Navigation Relay Cabinet
Inside Girder Box	PB-7B	See Panel Layout	NEMA 12	See Panel Layout on E-321	For Scada Communication Terminal Box
Service Platform	PB-7C	508 H x 406 W x 203 D	NEMA 4X	Caltrans Telephone	Enclosure only - For Telephone Terminal Box
Inside Girder Box	PB-7D	508 H x 406 W x 203 D	NEMA 12	Caltrans Telephone	Enclosure only - For Telephone Terminal Box
Service Platform	PB-8A	Size by Contractor	NEMA 4X-Fiberglass	See Panel Schedules	Enclosure only - For Transformer/Panel

SAS SUPERSTRUCTURE WB

Location	Type	Pull Box Size	Enclosure Type	Nameplate Pull Box Cover	Remarks
Inside Light Pole	PB-2N	152 L x 152 W x 102 D	NEMA 12	TOS-MVDS	Cable Termination
Tower Platform	PB-2M	305 L x 305 W x 152 D	NEMA 12	TOS-MVDS	Cable Termination
Inside Dehumidification #1 Area	PB-TOS	203 L x 203 W x 102 D	NEMA 4X	TOS-COM	Dehumidification Unit #1

SHEET NOTE:

(1) Panel enclosures shall be provided with padlock provisions.

REGISTERED PROFESSIONAL ENGINEER MANNELL FUMIO TAKAKI No. E 8651 Exp. 9/30/2008 ELECTRICAL STATE OF CALIFORNIA

FOR REVISION ONLY

REQUEST FOR INFORMATION NOT ADDRESSED IN THIS CCO REMAIN IN FORCE

MARK	DATE	DESCRIPTIONS	BY	CH'D	CCO#
1	02/19/08	ELECTRICAL MODIFICATIONS	MP EL	RR	42

REVISIONS

CONTRACT CHANGE ORDER NO._____
SHEET _____ OF _____

DETAILS
SAS SUPERSTRUCTURE ROADWAY WESTBOUND PULLBOX SCHEDULES

E-83

REVISED BY	DATE REVISED

CALCULATED/DESIGNED BY	FK	DATE 10/01
CHECKED BY	BL	11/01

DESIGN OVERSIGHT
BEHZAD GOLEMOHAMMADI

STATE OF CALIFORNIA - DEPARTMENT OF TRANSPORTATION
Caltrans

LAST REVISION 00-00-00
DATE PLOTTED => 4/4/2008
TIME PLOTTED => 4:42:59 PM

FOR REDUCED PLANS ORIGINAL SCALE IS IN MILLIMETERS 0 20 40 60 80

DGN FILE =>T:\13103\MS\pse\SAS Struc\CCO\SAS CCO42\Issued to Ca trans 08.03.19_do not revise\04-0120f1_0142R01.dgn
USERNAME =>llorico
CU 04251
EA 0120F1

DIST	COUNTY	ROUTE	KILOMETER POST TOTAL PROJECT	SHEET No	TOTAL SHEETS
04	SF	80	13.2/13.9	149R1	1204

REGISTERED ELECTRICAL ENGINEER 12/19/02 DATE

12-6-04
PLANS APPROVAL DATE

REGISTERED PROFESSIONAL ENGINEER JENS ERLINGSSON No. 8249 Exp. 9/30/06 ELECTRICAL STATE OF CALIFORNIA

PB POWER, Inc.
A Parsons Brinckerhoff Company
303 Second St., Suite 700N
San Francisco, CA 94107-1317

The State of California or its officers or agents shall not be responsible for the accuracy or completeness of electronic copies of this plan sheet.

Caltrans now has a web site! To get to the web site, go to http://www.dot.ca.gov

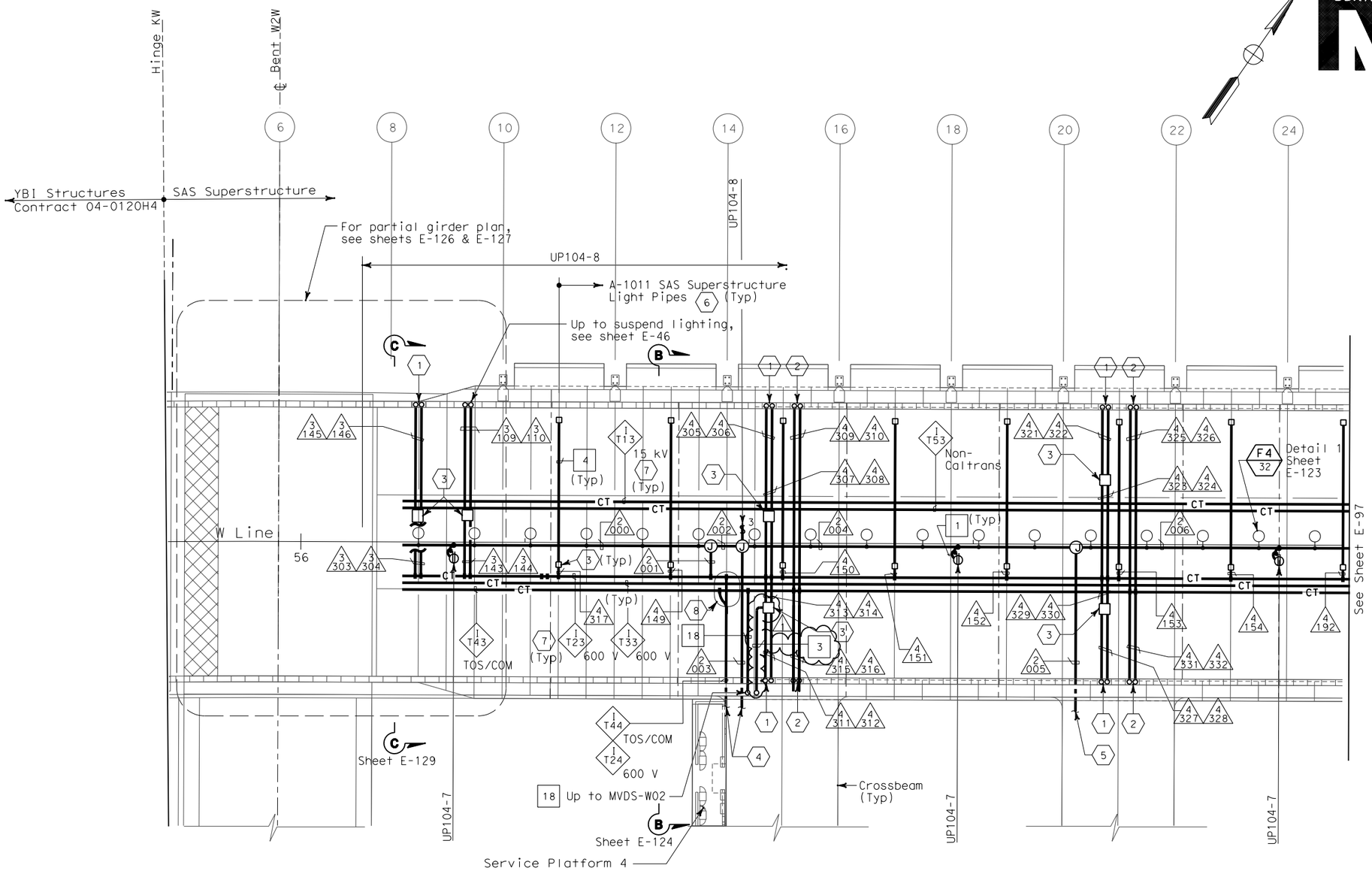

SAS SUPERSTRUCTURE - CONDUIT AND CABLE TRAY PLAN

SHEET NOTES:

1. Conduit up to PB-LTG located in barrier, see sheet E-46.
2. Conduit up to PB-COM located in barrier, see sheet E-46.
3. PB-2A locate on top of floor.
4. For cable tray run and lighting inside crossbeam, see sheet E-114.
5. For lighting inside crossbeam, see sheet E-119.
6. PB-2L with circuit for future light pipes. See sheet E-121 for installation details and E-130 for lighting schedule.
7. For cable tray & ground bar support, refer to sheet E-125.
8. For fiber splice tray detail, refer to sheet E-356.

NOTES:

1. References:
   - TOS equipment is shown for conduit routing only. For typical details of TOS controller and devices, see sheets E-344 through E-357.
   - For types of pull boxes, splice boxes and enclosures, see sheet E-83.
   - For bridge grounding plan, see sheet E-111.
   - For circuit and conduit/cable tray schedules, see sheets starting at E-401.
2. For other work related to Hinge KW and items not shown on this sheet, see Electrical Special Provisions.
3. The girder lighting fixtures are shown diagrammatically.Contractor shall install fixtures at railing posts with a maximum of 8000 mm between fixtures. For types and typical lighting fixture installation details, see sheet E-123.
4. The cable trays are shown diagrammatically. For typical girder cable tray plans and sections, see sheets E-124 and E-125.

REGISTERED PROFESSIONAL ENGINEER MARCELL FUMIO TAKAKI No. E 8651 Exp. 9/30/2008 ELECTRICAL STATE OF CALIFORNIA

FOR REVISION ONLY

REQUEST FOR INFORMATION NOT ADDRESSED IN THIS CCO REMAIN IN FORCE

MARK	DATE	DESCRIPTIONS	BY	CH'D	CCO#
1	02/19/08	ELECTRICAL MODIFICATIONS	MP EL	RR	42

REVISIONS

CONTRACT CHANGE ORDER NO._____
SHEET _____ OF _____

SAS SUPERSTRUCTURE GIRDER WESTBOUND
LIGHTING AND ELECTRICAL SYSTEMS

SCALE 1:200

THIS PLAN IS ACCURATE FOR ELECTRICAL WORK ONLY.

ALL DIMENSIONS ARE IN MILLIMETERS UNLESS OTHERWISE SHOWN.

E-96

DATE	REVISED BY	DATE	REVISED
8/02	FK	8/02	IAH

CALCULATED/DESIGNED BY — CHECKED BY

DESIGN OVERSIGHT — BEHZAD GOLEMOHAMMADI

STATE OF CALIFORNIA - DEPARTMENT OF TRANSPORTATION

LAST REVISION 00-00-00 — DATE PLOTTED => 4/4/2008 TIME PLOTTED => 4:40:31 PM

FOR REDUCED PLANS ORIGINAL SCALE IS IN MILLIMETERS 0 20 40 60 80

DGN FILE =>T:\13103\MS\pse\SAS Struc\CCO\SAS CCO42\04-0120f1_0149R01.dgn
USERNAME =>llorico

CU 04251 — EA 0120F1

DIST	COUNTY	ROUTE	KILOMETER POST TOTAL PROJECT	SHEET No	TOTAL SHEETS
04	SF	80	13.2/13.9	152R1	1204

Jens Erlingsson 12/19/02
REGISTERED ELECTRICAL ENGINEER DATE

12-6-04
PLANS APPROVAL DATE

REGISTERED PROFESSIONAL ENGINEER JENS ERLINGSSON No. 8249 Exp. 9/30/06 ELECTRICAL STATE OF CALIFORNIA

PB POWER, Inc.
A Parsons Brinckerhoff Company
303 Second St., Suite 700N
San Francisco, CA 94107-1317

The State of California or its officers or agents shall not be responsible for the accuracy or completeness of electronic copies of this plan sheet.

Caltrans now has a web site! To get to the web site, go to http://www.dot.ca.gov

Caltrans Metric

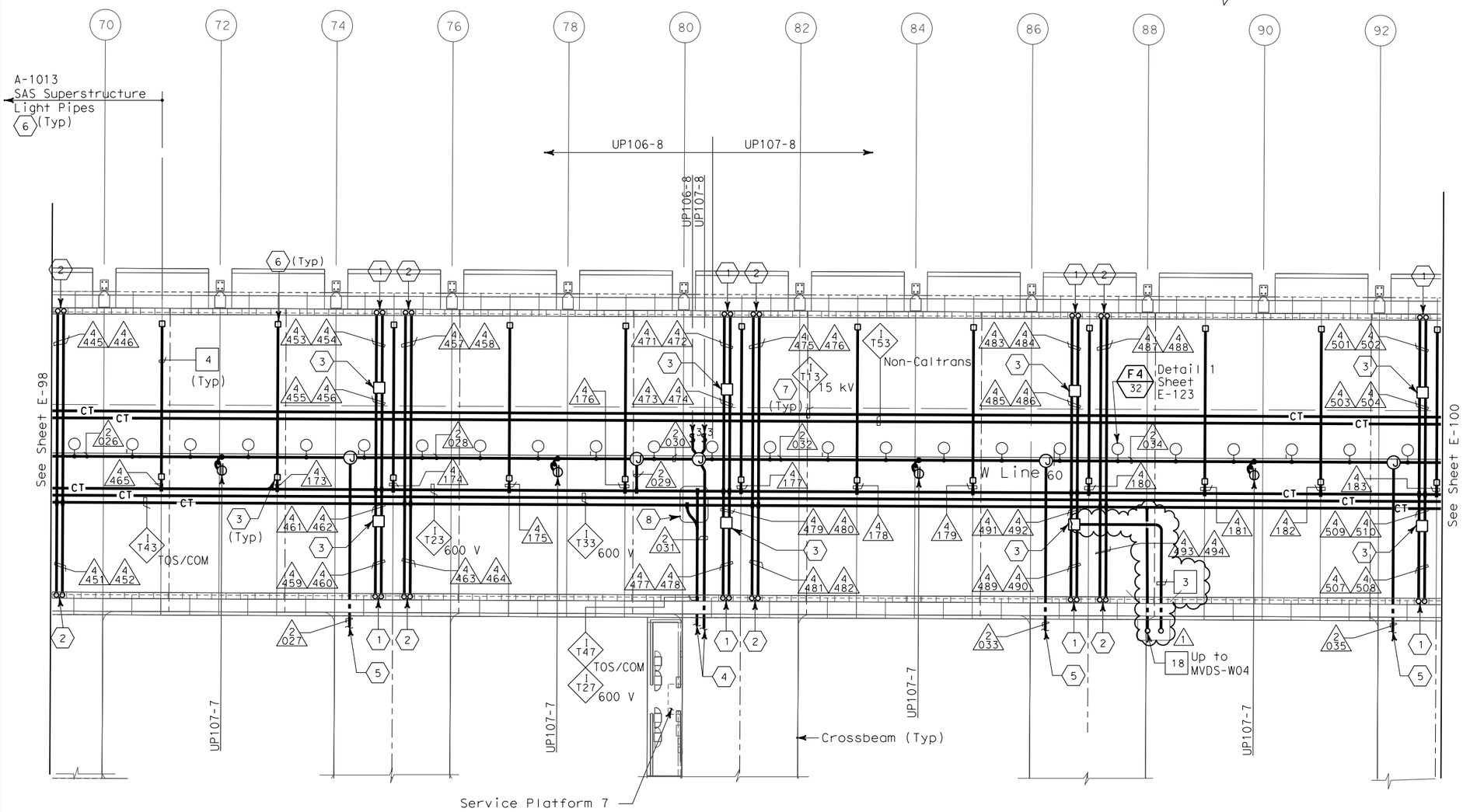

SAS SUPERSTRUCTURE - CONDUIT AND CABLE TRAY PLAN

SHEET NOTES:

1. Conduit up to PB-LTG located in barrier, see sheet E-49.
2. Conduit up to PB-COM located in barrier, see sheet E-49.
3. PB-2A, locate on top of floor.
4. For cable tray run and lighting inside crossbeam, see sheet E-117.
5. For lighting inside crossbeam, see sheet E-119.
6. PB-2L with circuit for future light pipes. See sheet E-121 for installation details and E-130 for lighting schedule.
7. For cable tray and ground bar support, refer to sheet E-125.
8. For fiber splice tray detail, refer to sheet E-356.

NOTES:

1. References:
   - TOS equipment is shown for conduit routing only. For typical details of TOS controller and devices, see sheets E-344 through E-357.
   - For types of pull boxes, splice boxes and enclosures, see sheet E-83.
   - For bridge grounding plan, see sheet E-111.
   - For circuit and conduit/cable tray schedules, see sheets starting at E-401.
2. For other related work not shown on this sheet, see Electrical Special Provisions.
3. The girder lighting fixtures are shown diagrammatically.Contractor shall install fixtures at railing posts with a maximum of 8000 mm between fixtures. For types and typical lighting fixture installation details, see sheet E-123.
4. The cable trays are shown diagrammatically. For typical girder cable tray plans and sections, see sheets E-124 and E-125.

REGISTERED PROFESSIONAL ENGINEER MARCELL FUMIO TAKANI No. E 8651 Exp. 9/30/2008 ELECTRICAL STATE OF CALIFORNIA

FOR REVISION ONLY

REQUEST FOR INFORMATION NOT ADDRESSED IN THIS CCO REMAIN IN FORCE

MARK	DATE	DESCRIPTIONS	BY	CH'D	CCO#
1	02/19/08	ELECTRICAL MODIFICATIONS	MP EL	RR	42
		REVISIONS			

CONTRACT CHANGE ORDER NO._____
SHEET _____ OF _____

THIS PLAN IS ACCURATE FOR ELECTRICAL WORK ONLY.

SAS SUPERSTRUCTURE GIRDER WESTBOUND
LIGHTING AND ELECTRICAL SYSTEMS
SCALE 1:200

ALL DIMENSIONS ARE IN MILLIMETERS UNLESS OTHERWISE SHOWN.

E-99

	DATE	REVISED BY	DATE	REVISED
CALCULATED/DESIGNED BY	FK	8/02	IAH	8/02
CHECKED BY				

DESIGN OVERSIGHT
BEHZAD GOLEMOHAMMADI

STATE OF CALIFORNIA - DEPARTMENT OF TRANSPORTATION
Caltrans

LAST REVISION 00-00-00
DATE PLOTTED => 4/4/2008
TIME PLOTTED => 4:40:59 PM

FOR REDUCED PLANS ORIGINAL SCALE IS IN MILLIMETERS 0 20 40 60 80

DGN FILE =>T:\13103\MS\pse\SAS Struc\CCO\SAS CC042\04-0120f1_0152R01.dgn
USERNAME =>llorico

CU 04251

EA 0120F1

DIST	COUNTY	ROUTE	KILOMETER POST TOTAL PROJECT	SHEET No	TOTAL SHEETS
04	SF	80	13.2/13.9	153R1	1204

12/19/02
REGISTERED ELECTRICAL ENGINEER DATE

12-6-04
PLANS APPROVAL DATE

REGISTERED PROFESSIONAL ENGINEER JENS ERLINGSSON No. 8249 Exp. 9/30/06 ELECTRICAL STATE OF CALIFORNIA

PB POWER, Inc.
A Parsons Brinckerhoff Company
303 Second St., Suite 700N
San Francisco, CA 94107-1317

The State of California or its officers or agents shall not be responsible for the accuracy or completeness of electronic copies of this plan sheet.

Caltrans now has a web site! To get to the web site, go to http://www.dot.ca.gov

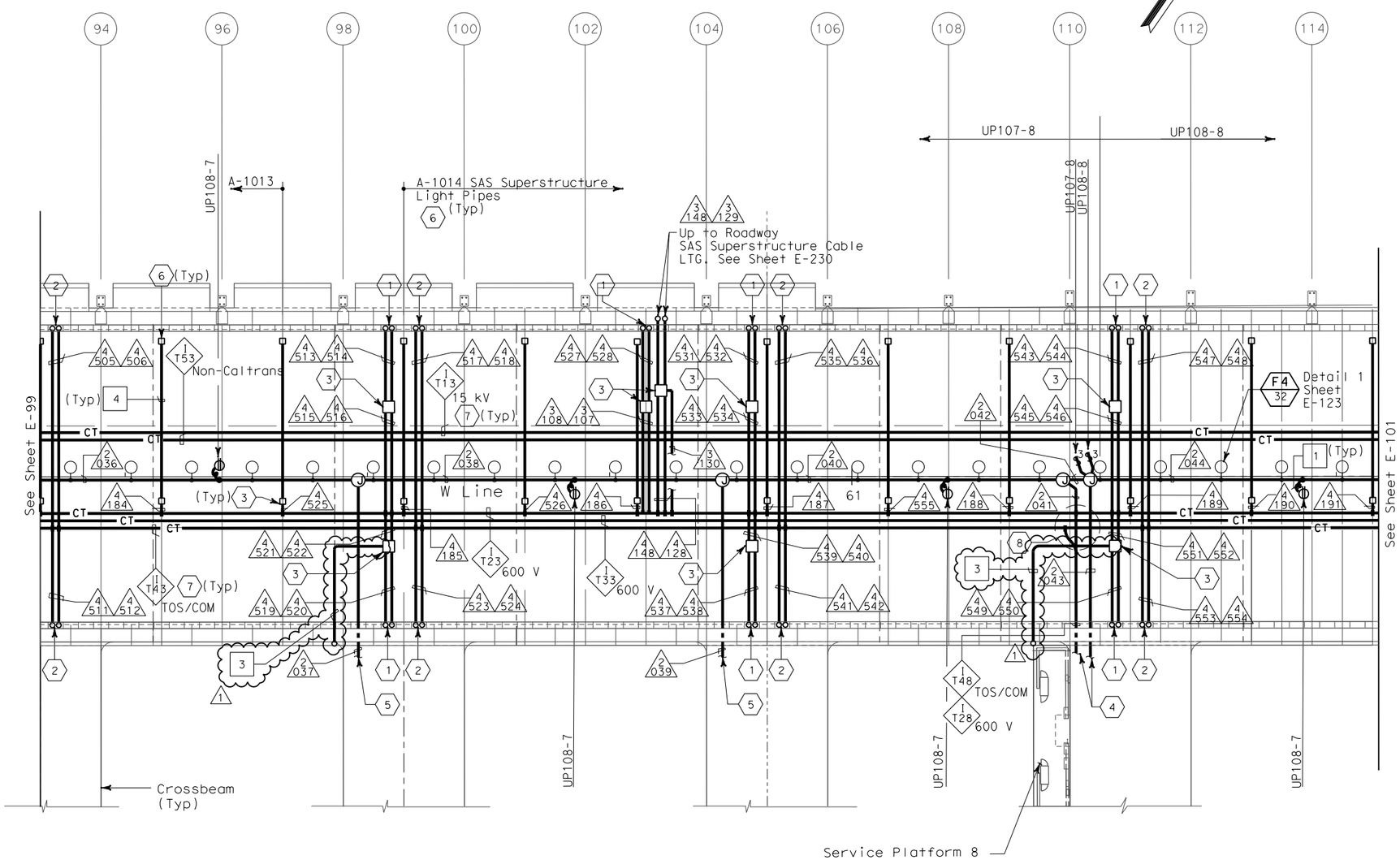

SHEET NOTES:

1. Conduit up to PB-LTG located in barrier, see sheet E-50.
2. Conduit up to PB-COM located in barrier, see sheet E-50.
3. PB-2A, locate on top of floor.
4. For cable tray run and lighting inside crossbeam, see sheet E-118.
5. For lighting inside crossbeam, see sheet E-119.
6. PB-2L with circuit for future light pipes. See sheet E-121 for installation details and E-130 for lighting schedule.
7. For cable tray and ground bar support, refer to sheet E-125.
8. For fiber splice tray detail, refer to sheet E-355.

NOTES:

1. References:
   - TOS equipment is shown for conduit routing only. For typical details of TOS controller and devices, see sheets E-344 through E-357.
   - For types of pull boxes, splice boxes and enclosures, see sheet E-83.
   - For bridge grounding plan, see sheet E-111.
   - For circuit and conduit/cable tray schedules, see sheets starting at E-401.
2. For other related work not shown on this sheet, see Electrical Special Provisions.
3. The girder lighting fixtures are shown diagrammatically.Contractor shall install fixtures at railing posts with a maximum of 8000 mm between fixtures. For types and typical lighting fixture installation details, see sheet E-123.
4. The cable trays are shown diagrammatically. For typical girder cable tray plans and sections, see sheets E-124 and E-125.

SAS SUPERSTRUCTURE - CONDUIT AND CABLE TRAY PLAN

REGISTERED PROFESSIONAL ENGINEER MAXWELL FUMIO TAKATA No. E 8651 Exp. 9/30/2008 ELECTRICAL STATE OF CALIFORNIA

FOR REVISION ONLY

REQUEST FOR INFORMATION NOT ADDRESSED IN THIS CCO REMAIN IN FORCE

MARK	DATE	DESCRIPTIONS	BY	CH'D	CCO#
1	02/19/08	ELECTRICAL MODIFICATIONS	MP EL	RR	42

REVISIONS

CONTRACT CHANGE ORDER NO._____
SHEET _____ OF _____

THIS PLAN IS ACCURATE FOR ELECTRICAL WORK ONLY.

ALL DIMENSIONS ARE IN MILLIMETERS UNLESS OTHERWISE SHOWN.

SAS SUPERSTRUCTURE GIRDER WESTBOUND
LIGHTING AND ELECTRICAL SYSTEMS
SCALE 1:200

E-100

DATE	BY	REVISED BY	DATE REVISED
8/02	FK	IAH	8/02

CALCULATED/DESIGNED BY — CHECKED BY

DESIGN OVERSIGHT — BEHZAD GOLEMOHAMMADI

STATE OF CALIFORNIA - DEPARTMENT OF TRANSPORTATION

LAST REVISION 00-00-00 — DATE PLOTTED => 4/4/2008 TIME PLOTTED => 4:41:41 PM

FOR REDUCED PLANS ORIGINAL SCALE IS IN MILLIMETERS 0 20 40 60 80

DGN FILE =>T:\13103\MS\pse\SAS Struc\CCO\SAS CCO42\04-0120f1_0153R01.dgn
USERNAME =>llorico

CU 04251 — EA 0120F1

DIST	COUNTY	ROUTE	KILOMETER POST TOTAL PROJECT	SHEET No	TOTAL SHEETS
04	SF	80	13.2/13.9	154R1	1204

REGISTERED ELECTRICAL ENGINEER 12/19/02 DATE

12-6-04
PLANS APPROVAL DATE

REGISTERED PROFESSIONAL ENGINEER JENS ERLINGSSON No. 8249 Exp. 9/30/06 ELECTRICAL STATE OF CALIFORNIA

PB POWER, Inc.
A Parsons Brinckerhoff Company
303 Second St., Suite 700N
San Francisco, CA 94107-1317

The State of California or its officers or agents shall not be responsible for the accuracy or completeness of electronic copies of this plan sheet.

Caltrans now has a web site! To get to the web site, go to http://www.dot.ca.gov

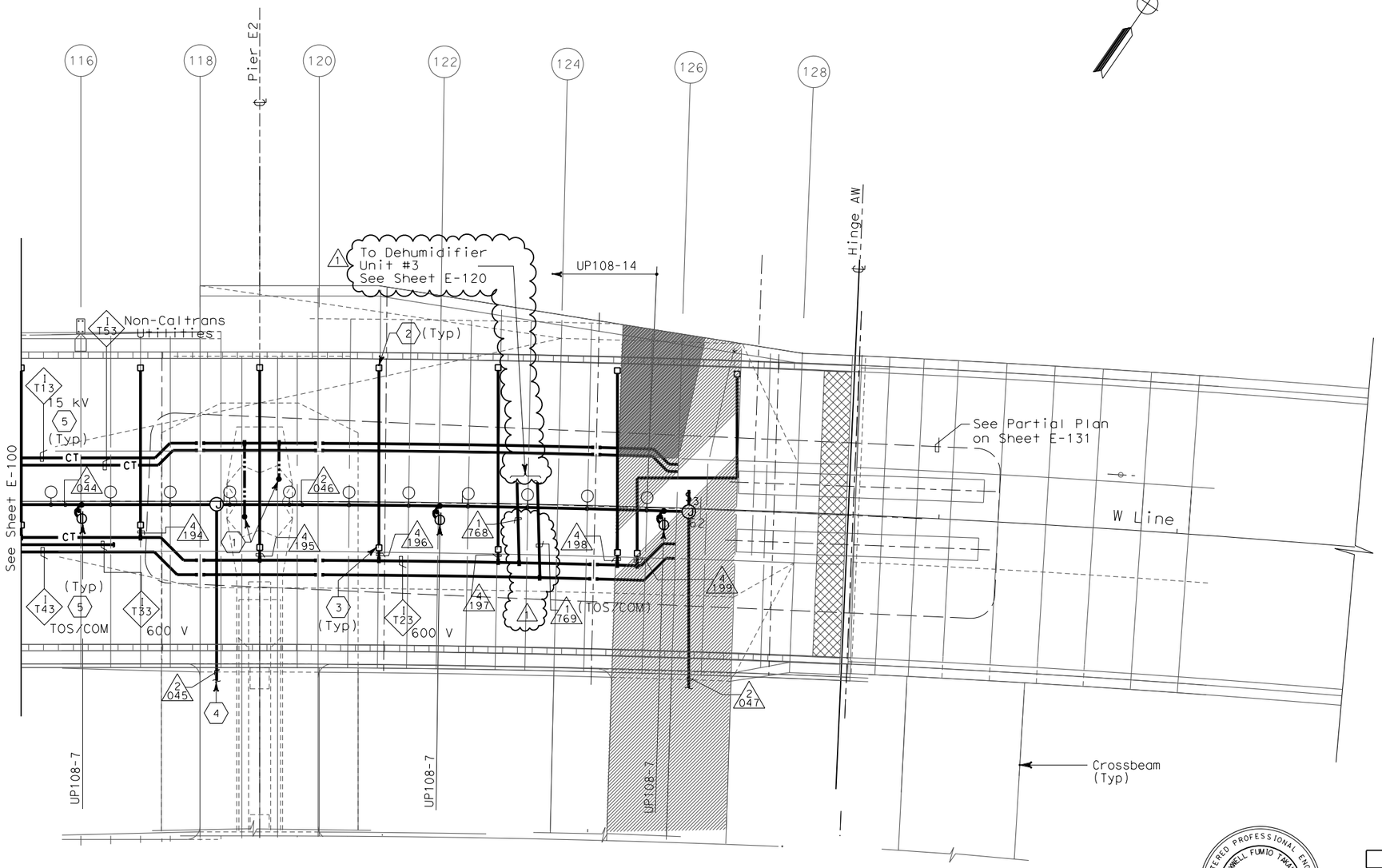

SHEET NOTES:

1. 250 kcmil bare copper grounding conductor exothermically welded to 500 kcmil system ground conductor. See E2/T1 structures EA-0120E1 for limit of work.
2. PB-2L with circuit for future light pipes.
3. PB-2A, locate on top of floor.
4. For lighting inside crossbeam, see sheet E-119.
5. For cable tray & ground bar support, refer to sheet E-125.

NOTES:

1. References:
   - TOS equipment is shown for conduit routing only. For typical details of TOS controller and devices, see sheets E-344 through E-361.
   - For types of pull boxes, splice boxes and enclosures, see sheet E-83.
   - For bridge grounding plan, see sheet E-111.
   - For circuit and conduit/cable tray schedules, see sheets starting at E-401.
2. For other work related to Hinge AW and items not shown on this sheet, see Electrical Special Provisions.
3. The girder lighting fixtures are shown diagrammatically.Contractor shall install fixtures at railing posts with a maximum of 8000 mm between fixtures. For types and typical lighting fixture installation details, see sheet E-123.
4. The cable trays are shown diagrammatically. For typical girder cable tray plans and sections, see sheets E-124 and E-125.

REGISTERED PROFESSIONAL ENGINEER MAXWELL FUMIO TAKAKI No. E 8651 Exp. 9/30/2008 ELECTRICAL STATE OF CALIFORNIA

FOR REVISION ONLY

REQUEST FOR INFORMATION NOT ADDRESSED IN THIS CCO REMAIN IN FORCE

MARK	DATE	DESCRIPTIONS	BY	CH'D	CCO#
1	02/19/08	ELECTRICAL MODIFICATIONS	MP EL	RR	42

REVISIONS

CONTRACT CHANGE ORDER NO._____
SHEET _____ OF _____

SAS SUPERSTRUCTURE - CONDUIT AND CABLE TRAY PLAN

SAS SUPERSTRUCTURE GIRDER WESTBOUND
LIGHTING AND ELECTRICAL SYSTEMS

SCALE 1:200

THIS PLAN IS ACCURATE FOR ELECTRICAL WORK ONLY.

E-101

STATE OF CALIFORNIA - DEPARTMENT OF TRANSPORTATION
Caltrans

DESIGN OVERSIGHT: BEHZAD GOLEMOHAMMADI

CALCULATED/DESIGNED BY: FK | DATE: | REVISED BY:
CHECKED BY: IAH | DATE REVISED:

LAST REVISION 00-00-00 | DATE PLOTTED => 4/4/2008 | TIME PLOTTED => 4:43:56 PM

FOR REDUCED PLANS ORIGINAL SCALE IS IN MILLIMETERS 0 20 40 60 80

DGN FILE =>T:\13103\MS\pse\SAS Struc\CCO\SAS CCO42\04-0120f1_0154R01.dgn
USERNAME =>llorico

CU 04251 | EA 0120F1

DIST	COUNTY	ROUTE	KILOMETER POST TOTAL PROJECT	SHEET No	TOTAL SHEETS
04	SF	80	13.2/13.9	172R1	1204

Caltrans Metric

12/19/02
REGISTERED ELECTRICAL ENGINEER DATE

12-6-04
PLANS APPROVAL DATE

REGISTERED PROFESSIONAL ENGINEER JENS ERLINGSSON No. 8249 Exp. 9/30/06 ELECTRICAL STATE OF CALIFORNIA

PB POWER, Inc.
A Parsons Brinckerhoff Company
303 Second St., Suite 700N
San Francisco, CA 94107-1317

The State of California or its officers or agents shall not be responsible for the accuracy or completeness of electronic copies of this plan sheet.

Caltrans now has a web site! To get to the web site, go to http://www.dot.ca.gov

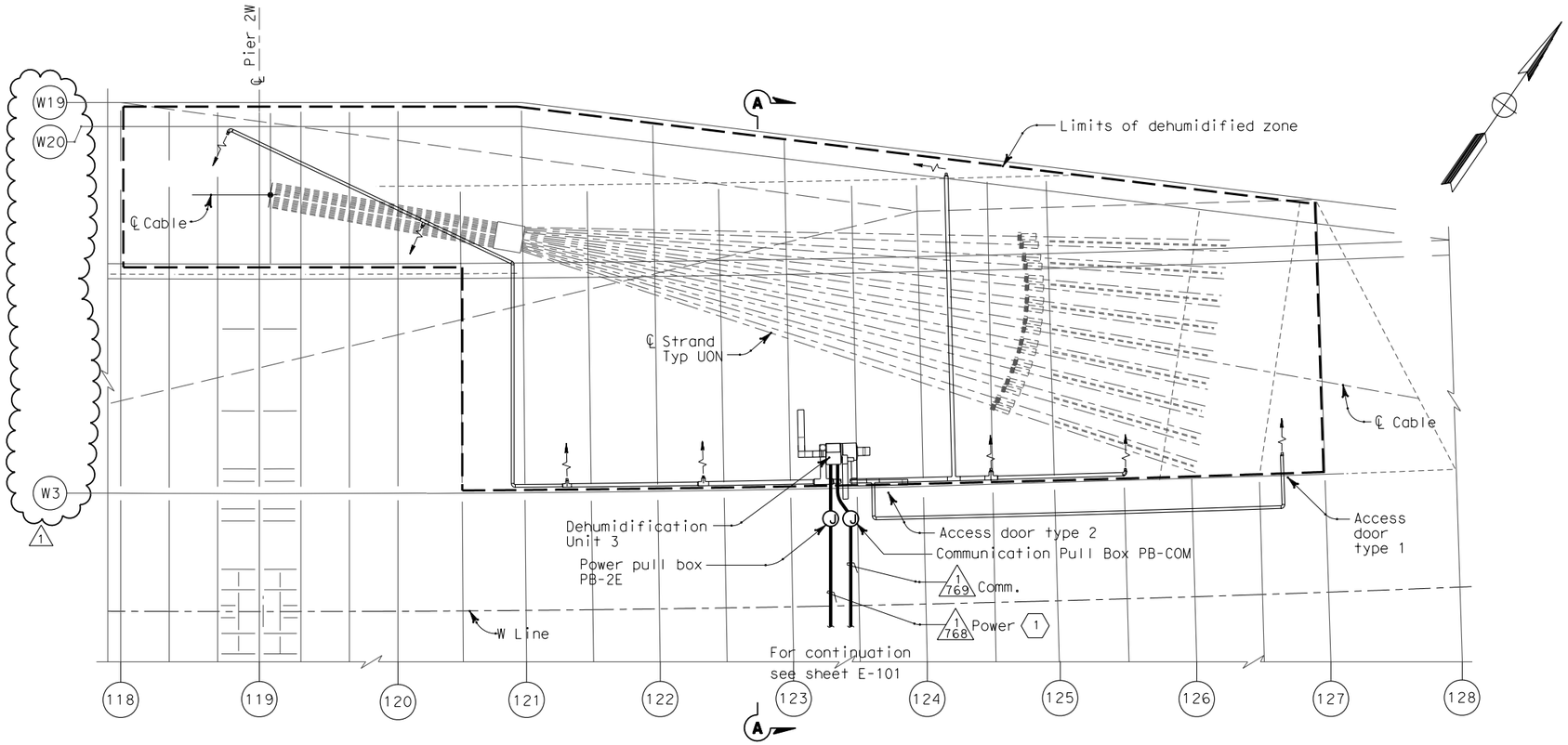

PLAN
SCALE 1:100

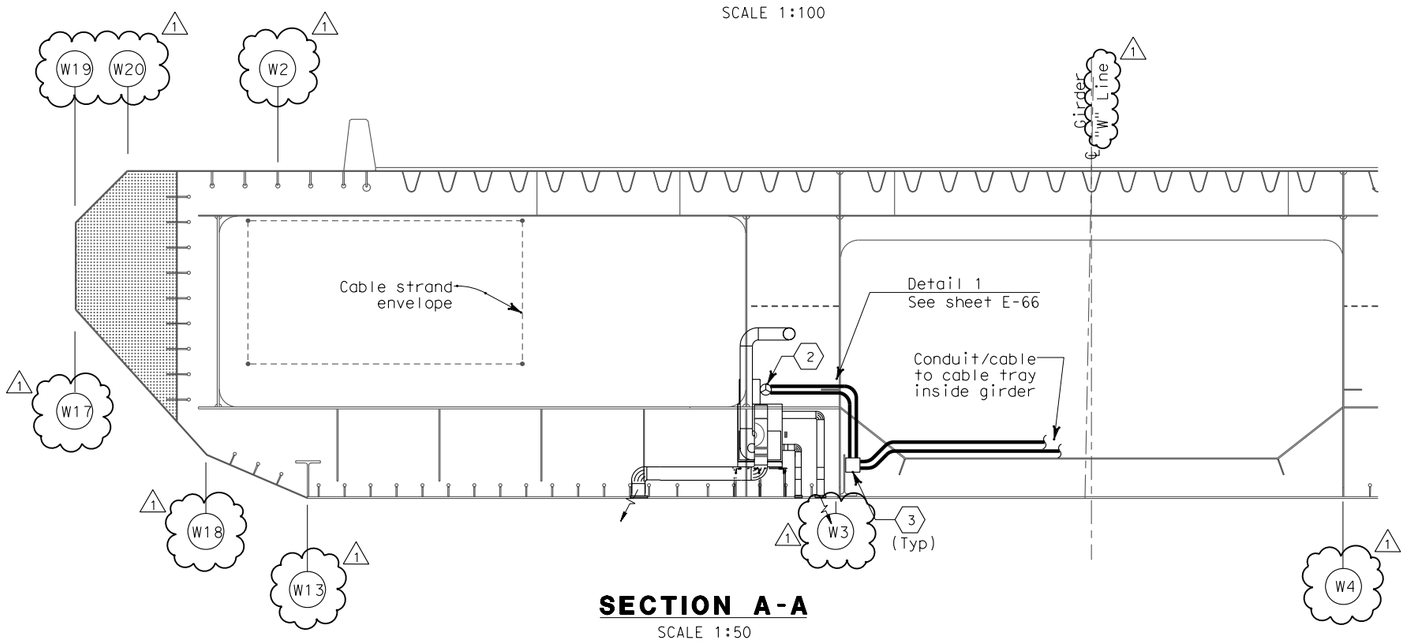

SECTION A-A
SCALE 1:50

SHEET NOTES:

1. Route power conduit/cable from dehumidifier to TOS/COM cable tray inside girder. Extend circuit to MH-25. See table this sheet.
2. Final connections to dehumidifier shall be liquid tight flexible metal conduit.
3. Install power and com. junction boxes on unistrut support.

NOTES:

1. References:
   - See sheets M001 through M011 for dehumidifier plans and details.
   - For pull box schedule, see sheet E-83.
2. E Line dehumidification unit 4 is similar. W Line dehumidification unit 3 is shown.

EQUIPMENT	ELECTRICAL	COMM
Dehumidification Unit 3	-480 V, 3 phase, 16 kW (estimated load) - Ckt #1117, LVCC-A - Integral circuit breaker disconnect	- RTU #11W at platform #8

REGISTERED PROFESSIONAL ENGINEER MAXWELL FUMIO TAKAKI No. E 8651 Exp. 9/30/2008 ELECTRICAL STATE OF CALIFORNIA

FOR REVISION ONLY

REQUEST FOR INFORMATION NOT ADDRESSED IN THIS CCO REMAIN IN FORCE

MARK	DATE	DESCRIPTIONS	BY	CH'D	CCO#
1	02/19/08	ELECTRICAL MODIFICATIONS	MP EL	RR	42

REVISIONS

CONTRACT CHANGE ORDER NO._____
SHEET _____ OF _____

DETAILS
SAS SUPERSTRUCTURE GIRDER WESTBOUND DEHUMIDIFIER UNIT 3
SCALE AS NOTED

E-120

ALL DIMENSIONS ARE IN MILLIMETERS UNLESS OTHERWISE SHOWN.

STATE OF CALIFORNIA - DEPARTMENT OF TRANSPORTATION
Caltrans

DESIGN OVERSIGHT: BEHZAD GOLEMOHAMMADI
CALCULATED/DESIGNED BY: FK DATE 08/02 REVISED BY
CHECKED BY: IAH 08/02 DATE REVISED

FOR REDUCED PLANS ORIGINAL SCALE IS IN MILLIMETERS 0 20 40 60 80

DGN FILE =>T:\13103\MS\pse\SAS Struc\CCO\SAS CC042\04-0120f1_0172R01.dgn
USERNAME =>llorico

CU 04251 EA 0120F1

LAST REVISION 00-00-00
DATE PLOTTED => 4/4/2008
TIME PLOTTED => 4:44:57 PM

DIST	COUNTY	ROUTE	KILOMETER POST TOTAL PROJECT	SHEET No	TOTAL SHEETS
04	SF	80	13.2/13.9	188R1	1204

REGISTERED ELECTRICAL ENGINEER 12/19/02 DATE

12-6-04
PLANS APPROVAL DATE

REGISTERED PROFESSIONAL ENGINEER JENS ERLINGSSON No. 8249 Exp. 9/30/06 ELECTRICAL STATE OF CALIFORNIA

PB POWER, Inc.
A Parsons Brinckerhoff Company
303 Second St., Suite 700N
San Francisco, CA 94107-1317

The State of California or its officers or agents shall not be responsible for the accuracy or completeness of electronic copies of this plan sheet.

Caltrans now has a web site! To get to the web site, go to: http://www.dot.ca.gov

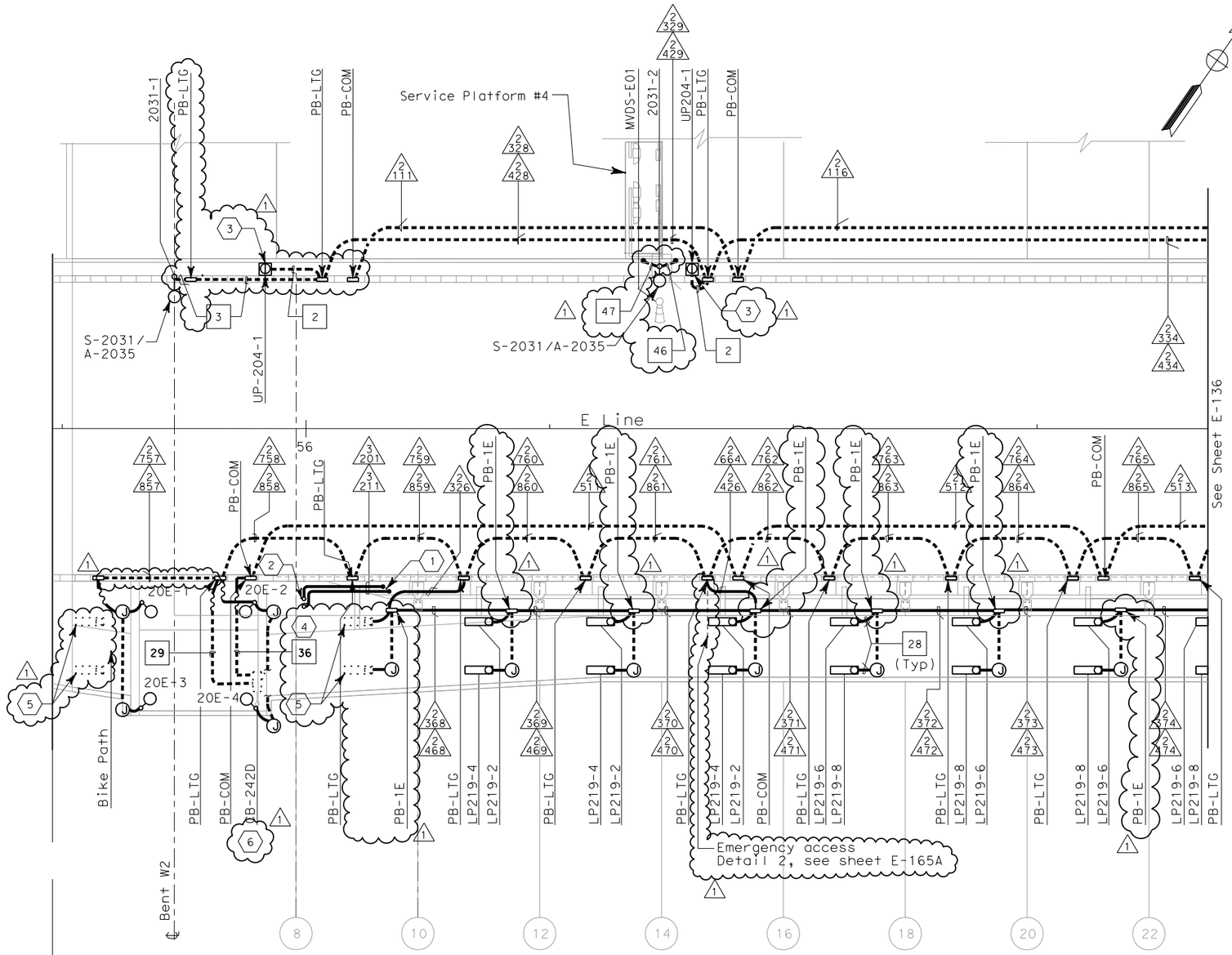

SAS SUPERSTRUCTURE - CONDUIT PLAN

YBI Structures ← → SAS Superstructure

Hinge KE

SHEET NOTES:

1. Conduit from barrier pull box or other equipment down into Girder Box, see sheet E-181.
2. For conduit to suspension cable lighting, see sheet E-226.
3. Roadway Barrier Receptacle, see Detail 1, sheet E-162.
4. Contractor shall coil 30 meters inside cable tray for feed into PB-COM by others.
5. Railing lights are contractor furnished and installed by others.
6. Bike path electrical components west of PP-9 are furnished by contractor and installed by others.

1. References:
   - For typical details and locations of conduit connections to light poles, barrier outlet boxes, call boxes, overhead sign lighting, CMS, CCTV and MVDS, see sheets E-160 thru E-162 and E-169.
   - TOS equipment is shown for conduit routing only. For typical details of TOS controller and devices, see sheets E-344 through E-357.
   - For types of pull boxes, splice boxes and enclosures, see sheet E-169.
   - For circuit and conduit/cable tray schedules, see sheets starting at E-401.
2. For Roadway level, Bike Path and Belvedere Lighting Fixture Schedules and wiring diagrams see sheets E-146, E-147 and E-165.
3. For Roadway level and Bike Path Call Box Schedule, see sheet E-397.
4. For number of lighting fixtures (main tower lights) see lighting schedule sheets E-271 and E-272.
5. All conduits and fittings routed exposed between the Bike Path and the roadway shall be galvanized rigid steel, PVC coated.
6. See sheets E-160 thru E-165 for conduit locations.
7. For Belvedere Lighting Fixture installation, see sheet E-173.

REGISTERED PROFESSIONAL ENGINEER MAXWELL FUMIO TAKAKI No. E 8651 Exp. 9/30/2008 ELECTRICAL STATE OF CALIFORNIA

FOR REVISION ONLY

REQUEST FOR INFORMATION NOT ADDRESSED IN THIS CCO REMAIN IN FORCE

MARK	DATE	DESCRIPTIONS	BY	CH'D	CCO#
1	02/19/08	ELECTRICAL MODIFICATIONS	MP EL	RR	42

REVISIONS

CONTRACT CHANGE ORDER NO._____
SHEET _____ OF _____

SAS SUPERSTRUCTURE ROADWAY EASTBOUND
LIGHTING AND ELECTRICAL SYSTEMS

SCALE 1:200

E-135

DATE	BY	REVISED BY	DATE REVISED
08/02	EDC	CYF	08/02

CALCULATED/DESIGNED BY
CHECKED BY

DESIGN OVERSIGHT
BEHZAD GOLEMOHAMMADI

STATE OF CALIFORNIA - DEPARTMENT OF TRANSPORTATION
Caltrans

THIS PLAN ACCURATE FOR ELECTRICAL WORK ONLY.

ALL DIMENSIONS ARE IN METERS UNLESS OTHERWISE SHOWN.

FOR REDUCED PLANS ORIGINAL SCALE IS IN MILLIMETERS 0 20 40 60 80

DGN FILE =>T:\13103\MS\pse\SAS Struc\CCO\SAS CC042\04-0120f1_0188R01.dgn
USERNAME =>llorico

CU 04251 EA 0120F1

LAST REVISION 00-00-00
DATE PLOTTED => 5/9/2008
TIME PLOTTED => 2:18:33 PM

DIST	COUNTY	ROUTE	KILOMETER POST TOTAL PROJECT	SHEET No	TOTAL SHEETS
04	SF	80	13.2/13.9	189R1	1204

12/19/02
REGISTERED ELECTRICAL ENGINEER DATE

12-6-04
PLANS APPROVAL DATE

REGISTERED PROFESSIONAL ENGINEER JENS ERLINGSSON No. 8249 Exp. 9/30/06 ELECTRICAL STATE OF CALIFORNIA

PB POWER, Inc.
A Parsons Brinckerhoff Company
303 Second St., Suite 700N
San Francisco, CA 94107-1317

The State of California or its officers or agents shall not be responsible for the accuracy or completeness of electronic copies of this plan sheet.

Caltrans now has a web site! To get to the web site, go to: http://www.dot.ca.gov

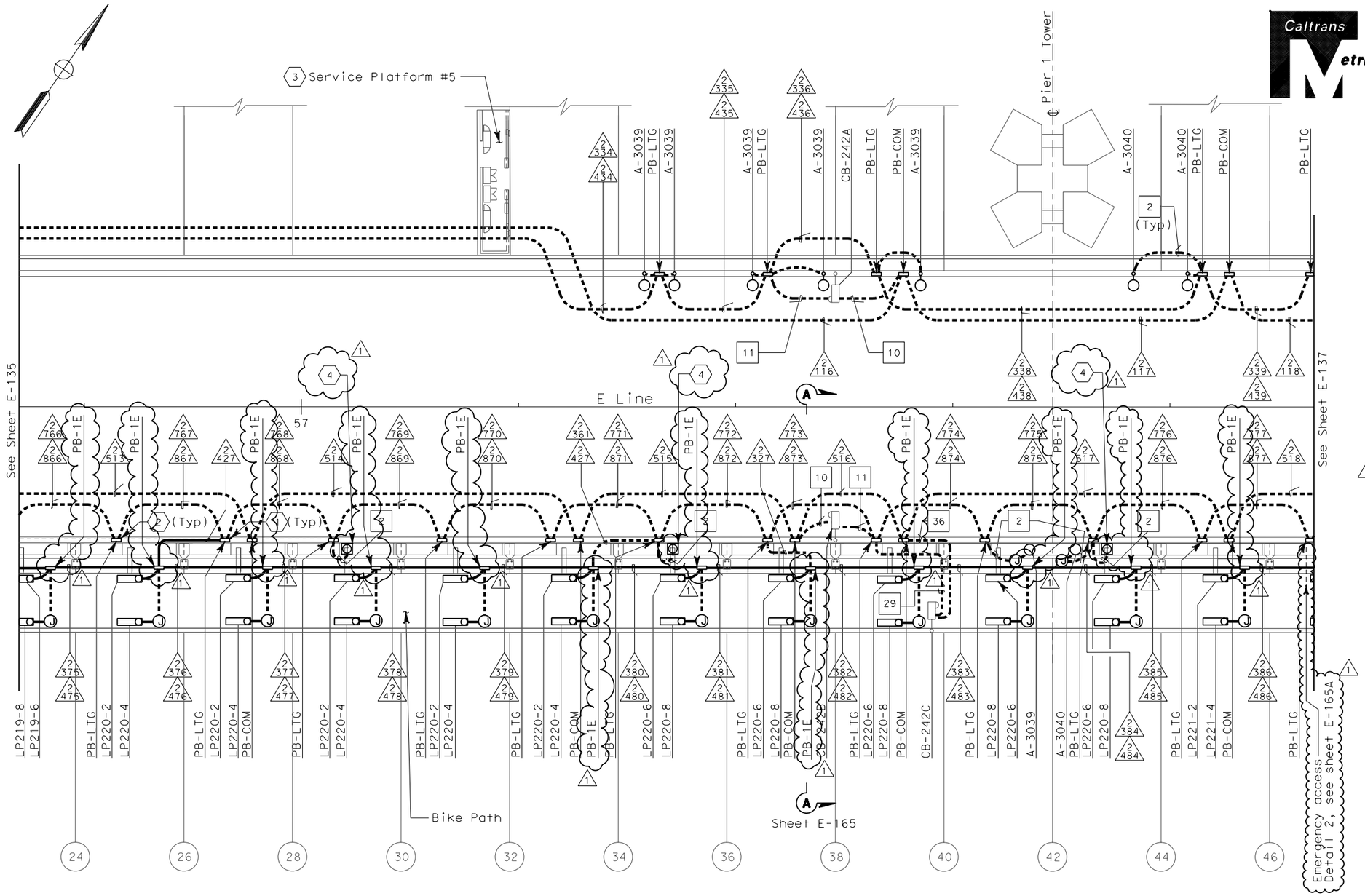

SHEET NOTES:

1. Conduit from barrier pullbox or other equipment down into Girder Box, see sheet E-182.
2. For conduit to tower and suspension cable lighting see sheet E-227.
3. Contractor shall furnish and install UP-205 and LP-220 per sheet E-72. For complete scope of work on platform and other related work not shown on this sheet, see Electrical Special Provisions.
4. Roadway Barrier Receptacle, see Detail 1, sheet E-162.

NOTES:

1. References:
   - For typical details and locations of conduit connections to light poles, barrier outlet boxes, call boxes, overhead sign lighting, CMS, CCTV and MVDS, see sheets E-160 thru E-162 and E-169.
   - TOS equipment is shown for conduit routing only. For typical details of TOS controller and devices, see sheets E-344 through E-357.
   - For types of pull boxes, splice boxes and enclosures, see sheet E-169.
   - For circuit and conduit/cable tray schedules, see sheets starting at E-401.
2. For Roadway Level Call Boxes, refer to sheet E-396.
3. For Roadway level, Bike Path and Belvedere Lighting Fixture Schedules, see sheets E-146, E-147 and E-165.
4. For Roadway level and Bike Path Call Box Schedule, see sheet E-397.
5. For number of lighting fixtures (main tower lights) see lighting schedule sheets E-271 and E-272.
6. All conduits and fittings routed exposed between the Bike Path and the roadway shall be galvanized rigid steel, PVC coated.
7. See sheets E-160 thru E-165 for conduit locations.

SAS SUPERSTRUCTURE CONDUIT - PLAN

REGISTERED PROFESSIONAL ENGINEER MANUELL FUMIO TAKAKI No. E 8651 Exp. 9/30/2008 ELECTRICAL STATE OF CALIFORNIA

FOR REVISION ONLY

REQUEST FOR INFORMATION NOT ADDRESSED IN THIS CCO REMAIN IN FORCE

MARK	DATE	DESCRIPTIONS	BY	CH'D	CCO#
1	02/19/08	ELECTRICAL MODIFICATIONS	MP EL	RR	42

REVISIONS

CONTRACT CHANGE ORDER NO._____
SHEET _____ OF _____

THIS PLAN ACCURATE FOR ELECTRICAL WORK ONLY.

SAS SUPERSTRUCTURE ROADWAY EASTBOUND
LIGHTING AND ELECTRICAL SYSTEMS

SCALE 1:200

E-136

ALL DIMENSIONS ARE IN METERS UNLESS OTHERWISE SHOWN

FOR REDUCED PLANS ORIGINAL SCALE IS IN MILLIMETERS 0 20 40 60 80

DGN FILE =>T:\13103\MS\pse\SAS Struc\CCO\SAS CCO42\04-0120f1_0189R01.dgn
USERNAME =>llorico

CU 04251 | EA 0120F1

LAST REVISION 00-00-00 | DATE PLOTTED => 5/9/2008 TIME PLOTTED => 2:19:13 PM

STATE OF CALIFORNIA - DEPARTMENT OF TRANSPORTATION
Caltrans

DESIGN OVERSIGHT: BEHZAD GOLEMOHAMMADI

CALCULATED/DESIGNED BY: EDC | DATE 08/02 | REVISED BY
CHECKED BY: CYF | 08/02 | DATE REVISED

DIST	COUNTY	ROUTE	KILOMETER POST TOTAL PROJECT	SHEET No	TOTAL SHEETS
04	SF	80	13.2/13.9	190R1	1204

Caltrans Metric

12/19/02
REGISTERED ELECTRICAL ENGINEER DATE

12-6-04
PLANS APPROVAL DATE

REGISTERED PROFESSIONAL ENGINEER
JENS ERLINGSSON
No. 8249
Exp. 9/30/06
ELECTRICAL
STATE OF CALIFORNIA

PB POWER, Inc.
A Parsons Brinckerhoff Company
303 Second St., Suite 700N
San Francisco, CA 94107-1317

The State of California or its officers or agents shall not be responsible for the accuracy or completeness of electronic copies of this plan sheet.

Caltrans now has a web site! To get to the web site, go to: http://www.dot.ca.gov

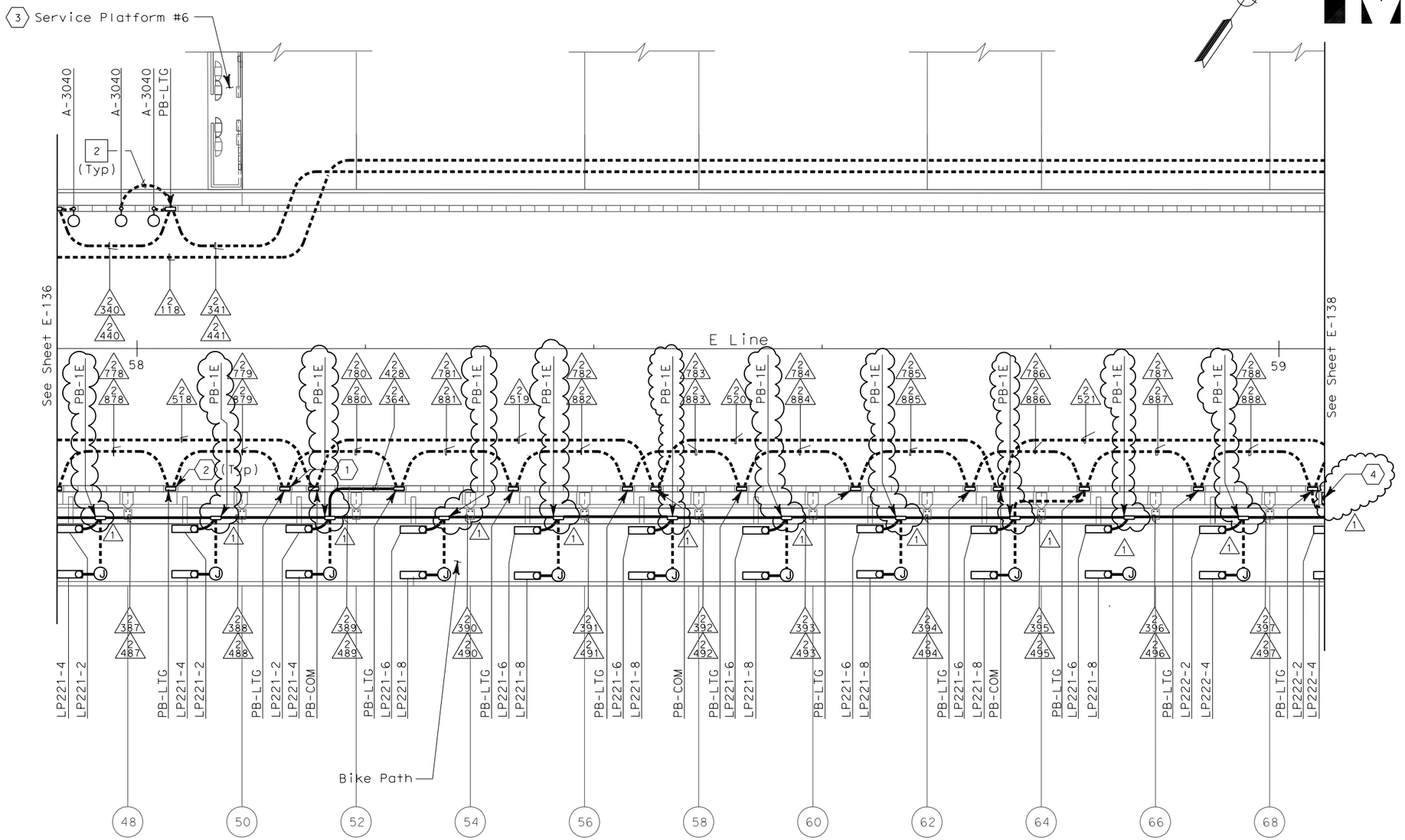

SHEET NOTES:

1. Conduit from barrier pullbox or other equipment down into Girder Box, see sheet E-183.
2. For conduit to tower and suspension cable lighting see sheet E-228.
3. Contractor shall furnish and install UP-206 and LP-221 per sheet E-73. For complete scope of work on platform and other related work not shown on this sheet, see Electrical Special Provisions.
4. Roadway Barrier Receptacle, see Detail 1, sheet E-162.

NOTES:

1. References:
   - For typical details and locations of conduit connections to light poles, barrier outlet boxes, call boxes, overhead sign lighting, CMS, CCTV and MVDS, see sheets E-160 thru E-162 and E-169.
   - TOS equipment is shown for conduit routing only. For typical details of TOS controller and devices, see sheets E-344 through E-357.
   - For types of pull boxes, splice boxes and enclosures, see sheet E-169.
   - For circuit and conduit/cable tray schedules, see sheets starting at E-401.
2. For Roadway Level Call Boxes, refer to sheet E-396.
3. For Roadway level, Bike Path and Belvedere Lighting Fixture Schedules, see sheets E-146, E-147 and E-165.
4. For Roadway level and Bike Path Call Box Schedule, see sheet E-397.
5. For number of lighting fixtures (main tower lights) see lighting schedule sheets E-271 and E-272.
6. All conduits and fittings routed exposed between the Bike Path and the roadway shall be galvanized rigid steel, PVC coated.
7. See sheets E-160 thru E-165 for conduit locations.

SAS SUPERSTRUCTURE - CONDUIT PLAN

REGISTERED PROFESSIONAL ENGINEER
MAXWELL FUMIO TAKAKI
No. E 8651
Exp. 9/30/2008
ELECTRICAL
STATE OF CALIFORNIA

FOR REVISION ONLY

REQUEST FOR INFORMATION NOT ADDRESSED IN THIS CCO REMAIN IN FORCE

MARK	DATE	DESCRIPTIONS	BY	CH'D	CCO#
1	02/19/08	ELECTRICAL MODIFICATIONS	MP EL	RR	42

REVISIONS

CONTRACT CHANGE ORDER NO._____
SHEET _____ OF _____

THIS PLAN ACCURATE FOR ELECTRICAL WORK ONLY.

ALL DIMENSIONS ARE IN METERS UNLESS OTHERWISE SHOWN

SAS SUPERSTRUCTURE ROADWAY EASTBOUND
LIGHTING AND ELECTRICAL SYSTEMS

SCALE 1:200

E-137

STATE OF CALIFORNIA - DEPARTMENT OF TRANSPORTATION
Caltrans

DESIGN OVERSIGHT
BEHZAD GOLEMOHAMMADI

CALCULATED/DESIGNED BY EDC DATE 08/02 REVISED BY
CHECKED BY CYF 08/02 DATE REVISED

LAST REVISION 00-00-00
DATE PLOTTED => 4/4/2008
TIME PLOTTED => 4:46:26 PM

FOR REDUCED PLANS ORIGINAL SCALE IS IN MILLIMETERS 0 20 40 60 80

DGN FILE =>T:\13103\MS\pse\SAS Struc\CCO\SAS CCO42\04-0120f1_0190R01.dgn
USERNAME =>llorico

CU 04251 EA 0120F1

DIST	COUNTY	ROUTE	KILOMETER POST TOTAL PROJECT	SHEET No	TOTAL SHEETS
04	SF	80	13.2/13.9	191R1	1204

REGISTERED ELECTRICAL ENGINEER 12/19/02 DATE

12-6-04
PLANS APPROVAL DATE

REGISTERED PROFESSIONAL ENGINEER JENS ERLINGSSON No. 8249 Exp. 9/30/06 ELECTRICAL STATE OF CALIFORNIA

PB POWER, Inc.
A Parsons Brinckerhoff Company
303 Second St., Suite 700N
San Francisco, CA 94107-1317

The State of California or its officers or agents shall not be responsible for the accuracy or completeness of electronic copies of this plan sheet.

Caltrans now has a web site! To get to the web site, go to: http://www.dot.ca.gov

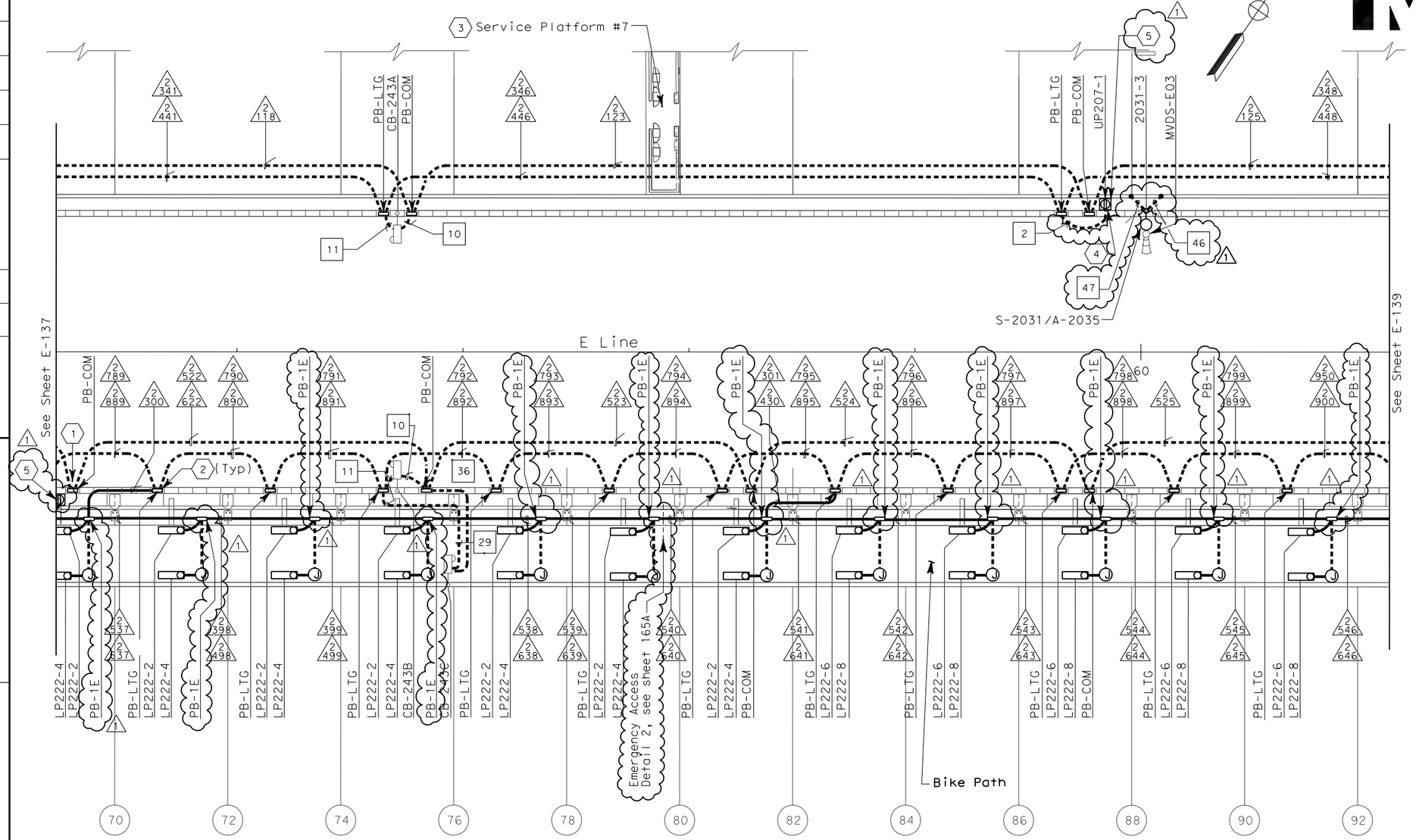

SHEET NOTES:

1. Conduit from barrier pullbox or other equipment down into Girder Box, see sheet E-184.
2. For conduit to tower and suspension cable lighting, see sheet E-229.
3. Contractor shall furnish and install UP-207 and LP-222 per sheet E-74. For complete scope of work on platform and other related work not shown on this sheet, see Electrical Special Provisions.
4. Conduit down to girder for MVDS, see sheet E-184.
5. Roadway Barrier Receptacle, see Detail 1, sheet E-162.

NOTES:

1. References:
   - For typical details and locations of conduit connections to light poles, barrier outlet boxes, call boxes, overhead sign lighting, CMS, CCTV and MVDS, see sheets E-160 thru E-162 and E-169.
   - TOS equipment is shown for conduit routing only. For typical details of TOS controller and devices, see sheets E-344 through E-357.
   - For types of pull boxes, splice boxes and enclosures, see sheet E-169.
   - For circuit and conduit/cable tray schedules, see sheets starting at E-401.
2. For Roadway Level Call Boxes, refer to sheet E-396.
3. For Roadway level, Bike Path and Belvedere Lighting Fixture Schedules, see sheets E-146, E-147 and E-165.
4. For Roadway level and Bike Path Call Box Schedule, see sheet E-397.
5. For number of lighting fixtures (main tower lights) see lighting schedule sheets E-271 and E-272.
6. All conduits and fittings routed exposed between the Bike Path and the roadway shall be galvanized rigid steel, PVC coated.
7. See sheets E-160 thru E-165 for conduit locations.

SAS SUPERSTRUCTURE - CONDUIT PLAN

REGISTERED PROFESSIONAL ENGINEER MAXWELL FUMIO TAKAKI No. E 8651 Exp. 9/30/2008 ELECTRICAL STATE OF CALIFORNIA

FOR REVISION ONLY

REQUEST FOR INFORMATION NOT ADDRESSED IN THIS CCO REMAIN IN FORCE

MARK	DATE	DESCRIPTIONS	BY	CH'D	CCO#
1	02/19/08	ELECTRICAL MODIFICATIONS	MP EL	RR	42

REVISIONS

CONTRACT CHANGE ORDER NO._____
SHEET _____ OF _____

THIS PLAN ACCURATE FOR ELECTRICAL WORK ONLY.

SAS SUPERSTRUCTURE ROADWAY EASTBOUND
LIGHTING AND ELECTRICAL SYSTEMS
SCALE 1:200

E-138

ALL DIMENSIONS ARE IN METERS UNLESS OTHERWISE SHOWN

FOR REDUCED PLANS ORIGINAL SCALE IS IN MILLIMETERS 0 20 40 60 80

DGN FILE =>T:\13103\MS\pse\SAS Struc\CCO\SAS CCO42\04-0120f1_0191R01.dgn
USERNAME =>llorico

CU 04251 | EA 0120F1

LAST REVISION 00-00-00 | DATE PLOTTED => 5/9/2008 TIME PLOTTED => 2:19:33 PM

STATE OF CALIFORNIA - DEPARTMENT OF TRANSPORTATION
Caltrans

DESIGN OVERSIGHT
BEHZAD GOLEMOHAMMADI

CALCULATED/DESIGNED BY | EDC | DATE 08/02 | REVISED BY
CHECKED BY | CYF | 08/02 | DATE REVISED

DIST	COUNTY	ROUTE	KILOMETER POST TOTAL PROJECT	SHEET No	TOTAL SHEETS
04	SF	80	13.2/13.9	192R1	1204

REGISTERED ELECTRICAL ENGINEER 12/19/02 DATE

12-6-04
PLANS APPROVAL DATE

REGISTERED PROFESSIONAL ENGINEER JENS ERLINGSSON No. 8249 Exp. 9/30/06 ELECTRICAL STATE OF CALIFORNIA

PB POWER, Inc.
A Parsons Brinckerhoff Company
303 Second St., Suite 700N
San Francisco, CA 94107-1317

The State of California or its officers or agents shall not be responsible for the accuracy or completeness of electronic copies of this plan sheet.

Caltrans now has a web site! To get to the web site, go to http://www.dot.ca.gov

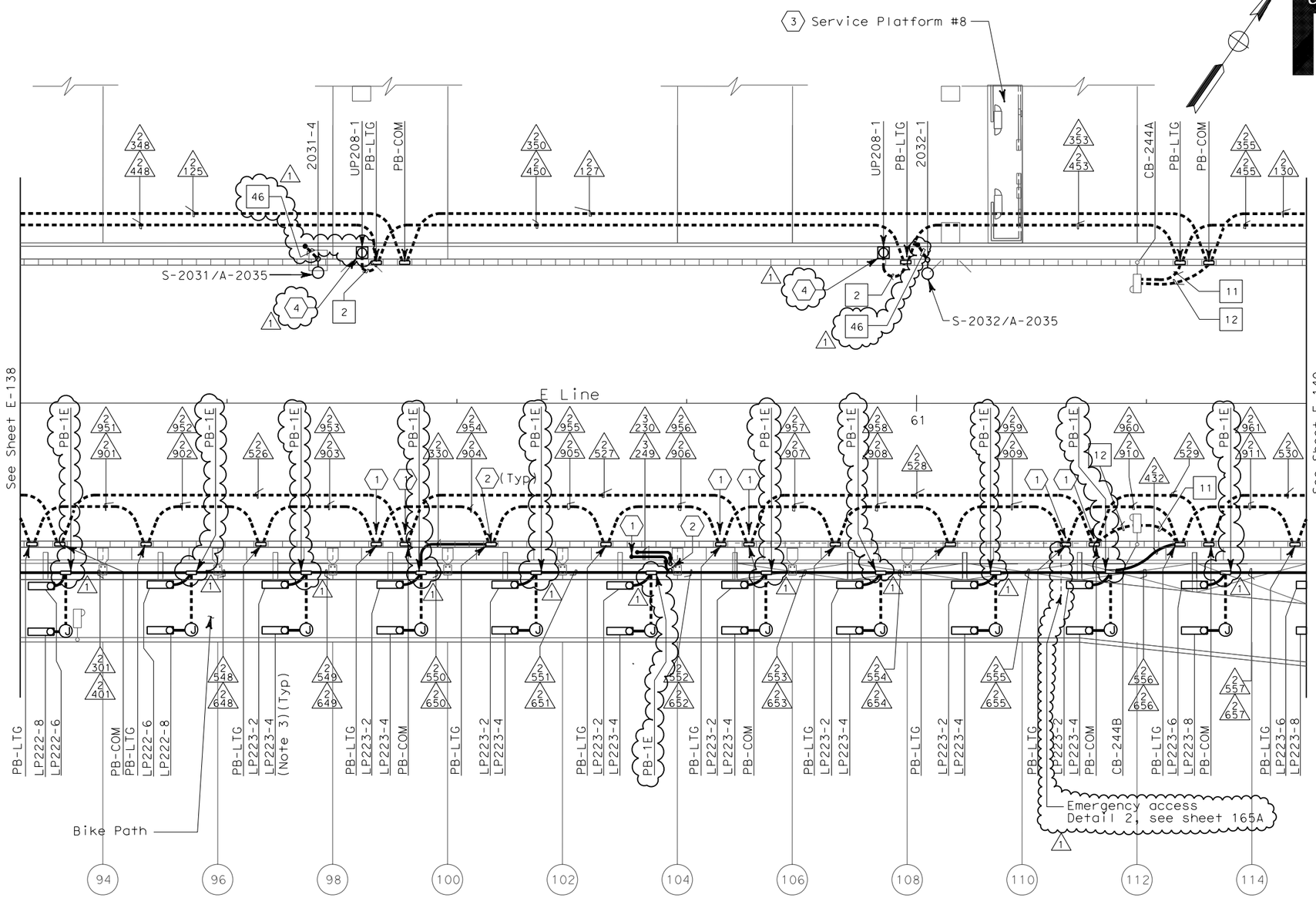

SAS SUPERSTRUCTURE - CONDUIT PLAN

SHEET NOTES:

(1) Conduit from barrier pullbox or other equipment down into Girder Box, see sheet E-185.

(2) Contractor shall furnish and install UP-208 and LP-223 per sheet E-75. For complete scope of work on platform and other related work not shown on this sheet, see Electrical Special Provisions.

(3) For conduit to tower and suspension cable lighting, see sheet E-230.

(1) (4) Roadway Barrier Receptacle, see Detail 1, sheet E-162.

NOTES:

1. References:
   - For typical details and locations of conduit connections to light poles, barrier outlet boxes, call boxes, overhead sign lighting, CMS, CCTV and MVDS, see sheets E-160 thru E-162 and E-169.
   - TOS equipment is shown for conduit routing only. For typical details of TOS controller and devices, see sheets E-344 through E-357.
   - For types of pull boxes, splice boxes and enclosures, see sheet E-169.
   - For circuit and conduit/cable tray schedules, see sheets starting at E-401.
2. For Roadway Level Call Boxes, refer to sheet E-396.
3. For Roadway level, Bike Path and Belvedere Lighting Fixture Schedules, see sheets E-146, E-147 and E-165.
4. For Roadway level and Bike Path Call Box Schedule, see sheet E-397.
5. For number of lighting fixtures (main tower lights) see lighting schedule sheets E-271 and E-272.
6. All conduits and fittings routed exposed between the Bike Path and the roadway shall be rigid galvanized steel, PVC coated.
7. See sheets E-160 thru E-165 for conduit locations.

REGISTERED PROFESSIONAL ENGINEER MANNELL FUMIO TAKAKI No. E 8651 Exp. 9/30/2008 ELECTRICAL STATE OF CALIFORNIA

FOR REVISION ONLY

REQUEST FOR INFORMATION NOT ADDRESSED IN THIS CCO REMAIN IN FORCE

MARK	DATE	DESCRIPTIONS	BY	CH'D	CCO#
1	02/19/08	ELECTRICAL MODIFICATIONS	MP EL	RR	42

REVISIONS

CONTRACT CHANGE ORDER NO._____
SHEET _____ OF _____

THIS PLAN ACCURATE FOR ELECTRICAL WORK ONLY.

SAS SUPERSTRUCTURE ROADWAY EASTBOUND
LIGHTING AND ELECTRICAL SYSTEMS

SCALE 1:200

E-139

ALL DIMENSIONS ARE IN METERS UNLESS OTHERWISE SHOWN

FOR REDUCED PLANS ORIGINAL SCALE IS IN MILLIMETERS 0 20 40 60 80

DGN FILE =>T:\13103\MS\pse\SAS Struc\CCO\SAS CCO42\04-0120f1_0192R01.dgn
USERNAME =>llorico

CU 04251 | EA 0120F1

DATE PLOTTED => 5/9/2008
TIME PLOTTED => 2:19:56 PM

LAST REVISION 00-00-00

STATE OF CALIFORNIA - DEPARTMENT OF TRANSPORTATION
Caltrans

DESIGN OVERSIGHT
BEHZAD GOLEMOHAMMADI

CALCULATED/DESIGNED BY EDC DATE 08/02 REVISED BY
CHECKED BY CYF 08/02 DATE REVISED

DIST	COUNTY	ROUTE	KILOMETER POST TOTAL PROJECT	SHEET No	TOTAL SHEETS
04	SF	80	13.2/13.9	193R1	1204

12/19/02
REGISTERED ELECTRICAL ENGINEER DATE

12-6-04
PLANS APPROVAL DATE

REGISTERED PROFESSIONAL ENGINEER JENS ERLINGSSON No. 8249 Exp. 9/30/06 ELECTRICAL STATE OF CALIFORNIA

PB POWER, Inc.
A Parsons Brinckerhoff Company
303 Second St., Suite 700N
San Francisco, CA 94107-1317

The State of California or its officers or agents shall not be responsible for the accuracy or completeness of electronic copies of this plan sheet.

Caltrans now has a web site! To get to the web site, go to http://www.dot.ca.gov

Caltrans Metric

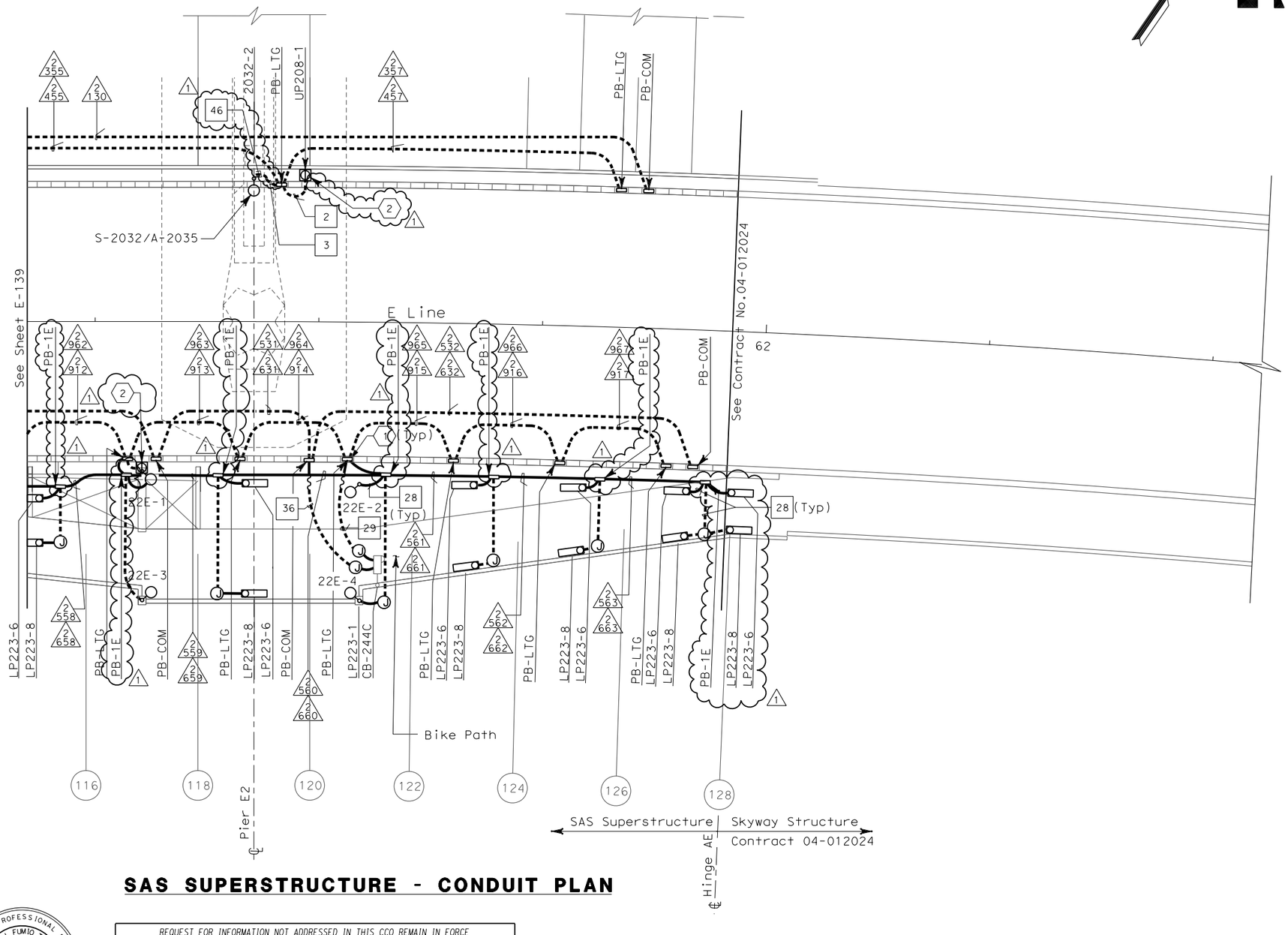

SAS SUPERSTRUCTURE - CONDUIT PLAN

SHEET NOTES:

1. For conduit to tower and suspension cable lighting, see sheet E-230.
2. Roadway Barrier Receptacle, see Detail 1, sheet E-162.

NOTES:

1. References:
   - For typical details and locations of conduit connections to light poles, barrier outlet boxes, call boxes, overhead sign lighting, CMS, CCTV and MVDS, see sheets E-160 thru E-162 and E-169.
   - TOS equipment is shown for conduit routing only. For typical details of TOS controller and devices, see sheets E-344 through E-357.
   - For types of pull boxes, splice boxes and enclosures, see sheet E-169.
   - For circuit and conduit/cable tray schedules, see sheets starting at E-401.
2. For Roadway Level Call Boxes, refer to sheet E-396.
3. For Roadway level, Bike Path and Belvedere Lighting Fixture Schedules, see sheets E-146, E-147 and E-165.
4. For Roadway level and Bike Path Call Box Schedule, see sheet E-397.
5. For number of lighting fixtures (main tower lights) see lighting schedule sheets E-271 and E-272.
6. All conduits and fittings routed exposed between the Bike Path and the roadway shall be galvanized rigid steel, PVC coated.
7. See sheets E-160 thru E-165 for conduit locations.
8. For Belvedere lighting fixture installation, see sheet E-173.

REGISTERED PROFESSIONAL ENGINEER MONNELL FUMIO TAKAKI No. E 8651 Exp. 9/30/2008 ELECTRICAL STATE OF CALIFORNIA

FOR REVISION ONLY

THIS PLAN ACCURATE FOR ELECTRICAL WORK ONLY.

REQUEST FOR INFORMATION NOT ADDRESSED IN THIS CCO REMAIN IN FORCE

MARK	DATE	DESCRIPTIONS	BY	CH'D	CCO#
1	02/19/08	ELECTRICAL MODIFICATIONS	MP EL	RR	42

REVISIONS

CONTRACT CHANGE ORDER NO._____
SHEET _____ OF _____

SAS SUPERSTRUCTURE ROADWAY EASTBOUND
LIGHTING AND ELECTRICAL SYSTEMS

SCALE 1:200

E-140

ALL DIMENSIONS ARE IN METERS UNLESS OTHERWISE SHOWN

FOR REDUCED PLANS ORIGINAL SCALE IS IN MILLIMETERS 0 20 40 60 80

DGN FILE =>T:\13103\MS\pse\SAS Struc\CCO\SAS CCO42\04-0120f1_0193R01.dgn
USERNAME =>llorico

CU 04251 | EA 0120F1

LAST REVISION 00-00-00 | DATE PLOTTED => 4/4/2008 TIME PLOTTED => 4:47:48 PM

STATE OF CALIFORNIA - DEPARTMENT OF TRANSPORTATION
Caltrans

DESIGN OVERSIGHT
BEHZAD GOLEMOHAMMADI

CALCULATED/DESIGNED BY | EDC | DATE 08/02 | REVISED BY
CHECKED BY | CYF | 08/02 | DATE REVISED

DIST	COUNTY	ROUTE	KILOMETER POST TOTAL PROJECT	SHEET No	TOTAL SHEETS
04	SF	80	13.2/13.9	194R1	1204

REGISTERED ELECTRICAL ENGINEER 12/19/02 DATE

12-6-04
PLANS APPROVAL DATE

PB POWER, Inc.
A Parsons Brinckerhoff Company
303 Second St., Suite 700N
San Francisco, CA 94107-1317

REGISTERED PROFESSIONAL ENGINEER JENS ERLINGSSON No. 8249 Exp. 9/30/06 ELECTRICAL STATE OF CALIFORNIA

The State of California or its officers or agents shall not be responsible for the accuracy or completeness of electronic copies of this plan sheet.

Caltrans now has a web site! To get to the web site, go to http://www.dot.ca.gov

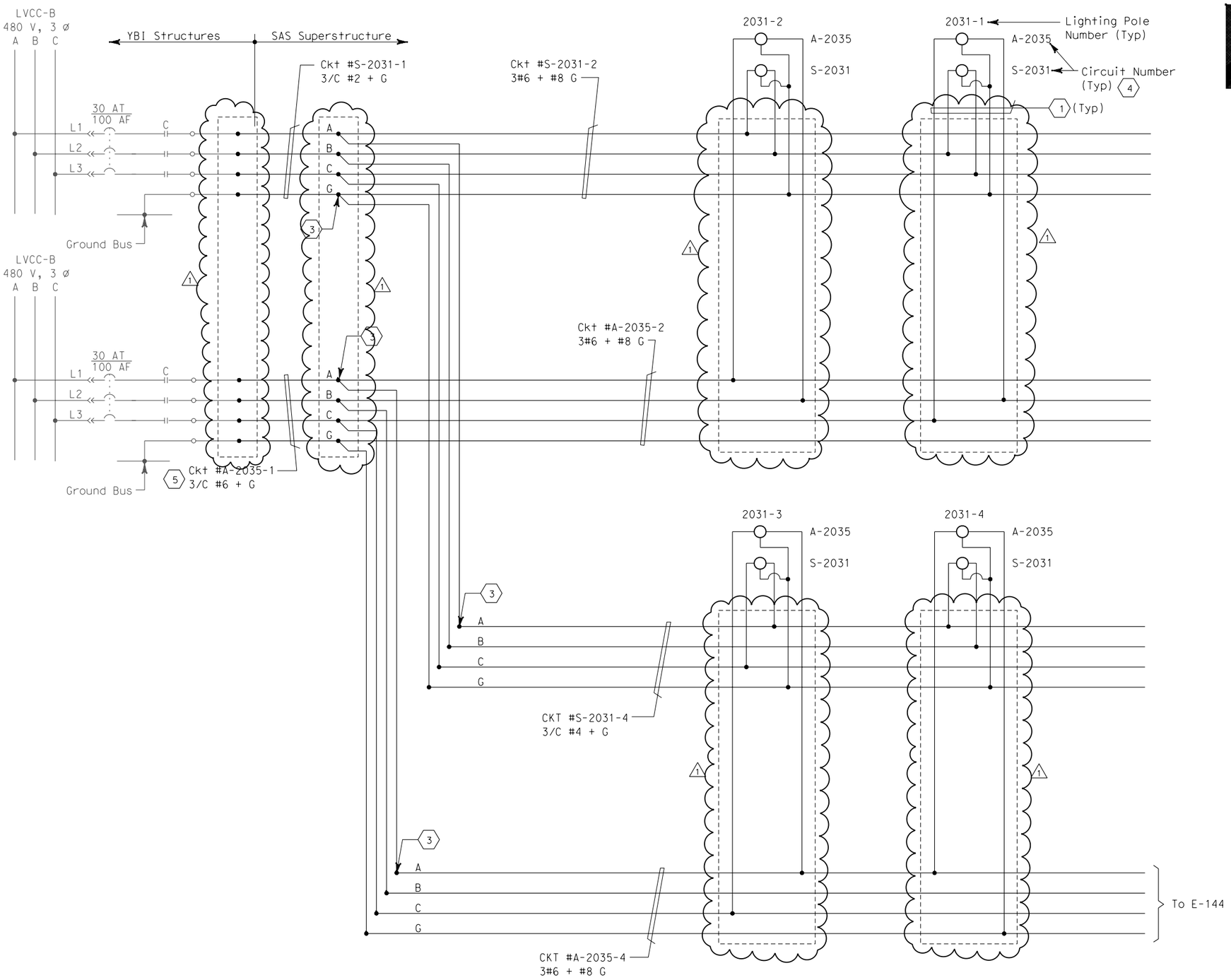

SHEET NOTES:

1. 4#10 + #10 G, single conductors.
2. Deleted.
3. Conductors spliced inside junction box located inside girder.
4. For Main Span Roadway Eastbound lighting schedule, see sheet E-168.
5. The Contractor shall extend and coil 5 meters of cable in manhole 25. All cables shall be tagged with circuit numbers as shown.

NOTES:

1. Use multi-conductor cable if circuit is routed via cable trays.
2. References:
   - For LVCC-B single line diagrams, see sheets E-32 to E-34
   - For circuit and conduit/cable tray schedules, see sheets starting at E-401.
3. For SAS Superstructure Roadway Eastbound 480 V Roadway Lighting, see sheets E-135 thru E-140.

REGISTERED PROFESSIONAL ENGINEER MAXWELL FUMIO TAKAKI No. E 8651 Exp. 9/30/2008 ELECTRICAL STATE OF CALIFORNIA

FOR REVISION ONLY

REQUEST FOR INFORMATION NOT ADDRESSED IN THIS CCO REMAIN IN FORCE

MARK	DATE	DESCRIPTIONS	BY	CH'D	CCO#
1	02/19/08	ELECTRICAL MODIFICATIONS	MP EL	RR	42

REVISIONS

CONTRACT CHANGE ORDER NO._____
SHEET _____ OF _____

DETAILS
SAS SUPERSTRUCTURE ROADWAY EASTBOUND 480 V ROADWAY LIGHTING WIRING DIAGRAM

NO SCALE

E-143

STATE OF CALIFORNIA - DEPARTMENT OF TRANSPORTATION
Caltrans

DESIGN OVERSIGHT: BEHZAD GOLEMOHAMMADI
CALCULATED/DESIGNED BY: JP DATE 09/01
CHECKED BY: BL 11/01
REVISED BY
DATE REVISED

DATE PLOTTED => 5/9/2008
TIME PLOTTED => 2:20:24 PM
LAST REVISION 00-00-00

FOR REDUCED PLANS ORIGINAL SCALE IS IN MILLIMETERS 0 20 40 60 80

DGN FILE =>T:\13103\MS\pse\SAS Struc\CCO\SAS CCO42\04-0120f1_0194R01.dgn
USERNAME =>llorico

CU 04251

EA 0120F1

DIST	COUNTY	ROUTE	KILOMETER POST TOTAL PROJECT	SHEET No	TOTAL SHEETS
04	SF	80	13.2/13.9	195R1	1204

Caltrans Metric

REGISTERED ELECTRICAL ENGINEER 12/19/02 DATE

12-6-04
PLANS APPROVAL DATE

PB POWER, Inc.
A Parsons Brinckerhoff Company
303 Second St., Suite 700N
San Francisco, CA 94107-1317

REGISTERED PROFESSIONAL ENGINEER JENS ERLINGSSON No. 8249 Exp. 9/30/06 ELECTRICAL STATE OF CALIFORNIA

The State of California or its officers or agents shall not be responsible for the accuracy or completeness of electronic copies of this plan sheet.

Caltrans now has a web site! To get to the web site, go to http://www.dot.ca.gov

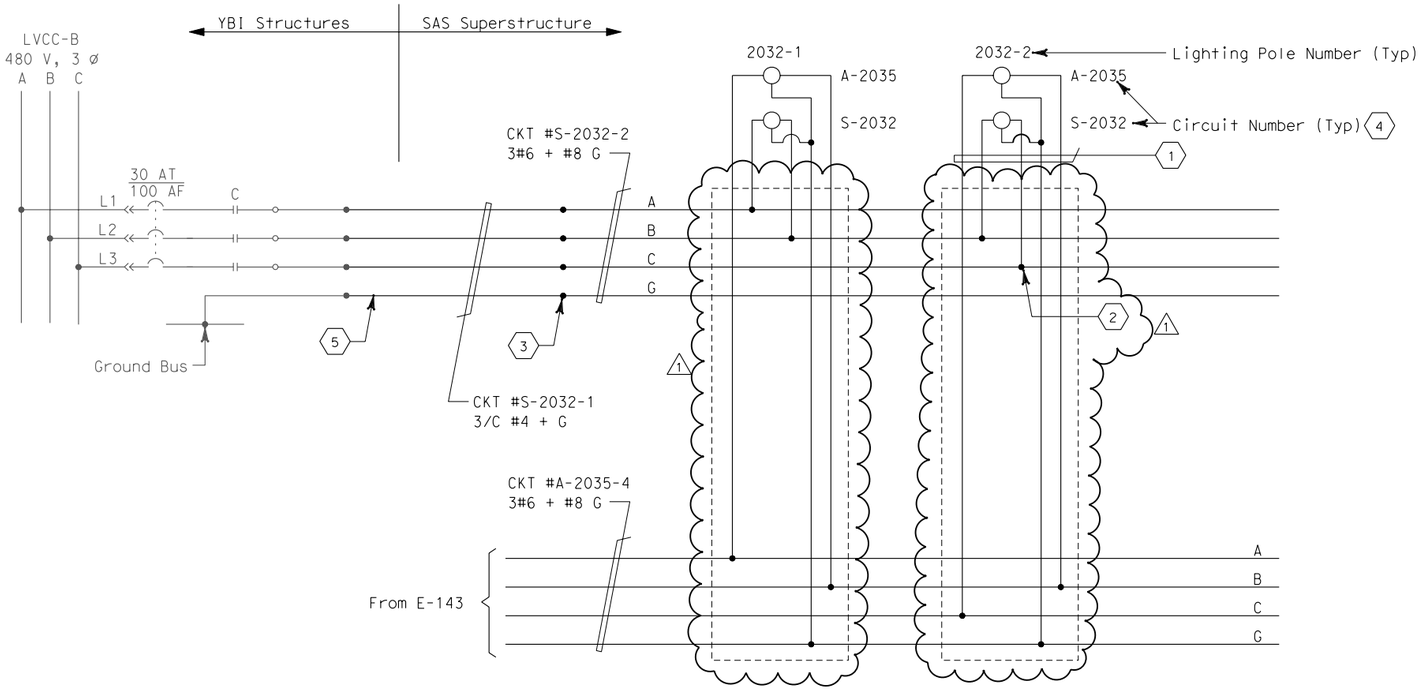

SHEET NOTES:

1. 4#10 + #10 G single conductors.
2. Tape and coil conductors spliced inside pull box PB-LTG. (Pole #2032-2 only).
3. Conductors spliced inside junction box located inside girder.
4. For SAS Superstructure Roadway Eastbound lighting schedule, see sheet E-168.
5. The Contractor shall extend and coil 5 meters of cable in manhole 25. All cables shall be tagged with circuit numbers as shown.

NOTES:

1. Use multi-conductor cable if circuit is routed via cable trays.
2. References:
   - For LVCC-B single line diagrams, see sheets E-32 to E-34
   - For pull box schedules, see sheet E-169
   - For circuit and conduit/cable tray schedules, see sheets starting at E-401.
3. For SAS Superstructure Roadway Eastbound 480 V Roadway Lighting, see sheets E-139 and E-140.

REGISTERED PROFESSIONAL ENGINEER MAXWELL FUMIO TAKAKI No. E 8651 Exp. 9/30/2008 ELECTRICAL STATE OF CALIFORNIA

FOR REVISION ONLY

REQUEST FOR INFORMATION NOT ADDRESSED IN THIS CCO REMAIN IN FORCE

MARK	DATE	DESCRIPTIONS	BY	CH'D	CCO#
1	02/19/08	ELECTRICAL MODIFICATIONS	MP EL	RR	42

REVISIONS

CONTRACT CHANGE ORDER NO._____
SHEET _____ OF _____

DETAILS
SAS SUPERSTRUCTURE ROADWAY EASTBOUND 480 V ROADWAY LIGHTING WIRING DIAGRAM

NO SCALE

E-144

STATE OF CALIFORNIA - DEPARTMENT OF TRANSPORTATION
Caltrans

DESIGN OVERSIGHT: BEHZAD GOLEMOHAMMADI

CALCULATED/DESIGNED BY: JP | DATE: 09/01 | REVISED BY
CHECKED BY: BL | 11/01 | DATE REVISED

LAST REVISION 00-00-00
DATE PLOTTED => 4/4/2008
TIME PLOTTED => 4:48:36 PM

FOR REDUCED PLANS ORIGINAL SCALE IS IN MILLIMETERS 0 20 40 60 80

DGN FILE =>T:\13103\MS\pse\SAS Struc\CCO\SAS CC042\04-0120f1_0195R01.dgn
USERNAME =>llorico

CU 04251

EA 0120F1

DIST	COUNTY	ROUTE	KILOMETER POST TOTAL PROJECT	SHEET No	TOTAL SHEETS
04	SF	80	13.2/13.9	197R1	1204

Caltrans Metric

REGISTERED ELECTRICAL ENGINEER 12/19/02 DATE

12-6-04
PLANS APPROVAL DATE

REGISTERED PROFESSIONAL ENGINEER JENS ERLINGSSON No. 8249 Exp. 9/30/06 ELECTRICAL STATE OF CALIFORNIA

PB POWER, Inc.
A Parsons Brinckerhoff Company
303 Second St., Suite 700N
San Francisco, CA 94107-1317

The State of California or its officers or agents shall not be responsible for the accuracy or completeness of electronic copies of this plan sheet.

Caltrans now has a web site! To get to the web site, go to http://www.dot.ca.gov

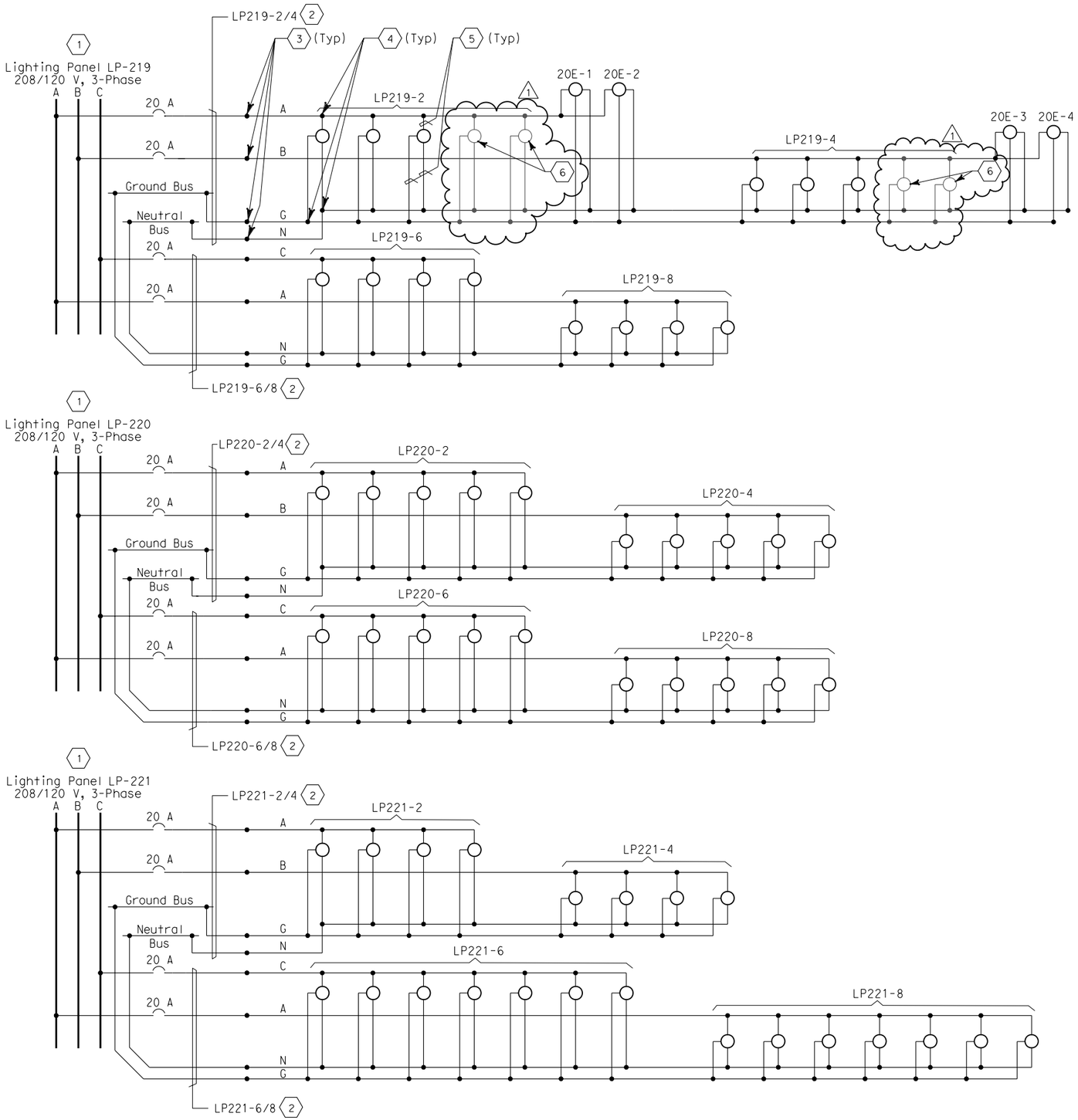

SHEET NOTES:

1. For lighting panel schedule LP-219, LP-220, LP-221, see sheets E-155 and E-156.
2. Lighting feeder cable is 3/C #6 + G.
3. Conductors spliced inside PB-LTG located in barrier.
4. Conductors spliced inside PB-LTG (PB-9A) located next to bike path.
5. 2#10 + #10 G single conductors.
6. Railing lights are contractor furnished and installed by others.

NOTES:

1. For circuit and conduit/cable tray schedules, see sheets starting at E-401.

REGISTERED PROFESSIONAL ENGINEER MAXWELL FUMIO TAKAKI No. E 8651 Exp. 9/30/2008 ELECTRICAL STATE OF CALIFORNIA

FOR REVISION ONLY

REQUEST FOR INFORMATION NOT ADDRESSED IN THIS CCO REMAIN IN FORCE

MARK	DATE	DESCRIPTIONS	BY	CH'D	CCO#
1	02/19/08	ELECTRICAL MODIFICATIONS	MP EL	RR	42

REVISIONS

CONTRACT CHANGE ORDER NO._____
SHEET _____ OF _____

DETAILS
SAS SUPERSTRUCTURE ROADWAY EASTBOUND 120 V BIKE PATH LIGHTING WIRING DIAGRAMS
NO SCALE

E-146

DATE	BY	REVISED BY	DATE REVISED
9/01	JP	BL	11/01

CALCULATED/DESIGNED BY — CHECKED BY

DESIGN OVERSIGHT — BEHZAD GOLEMOHAMMADI

STATE OF CALIFORNIA - DEPARTMENT OF TRANSPORTATION — Caltrans

LAST REVISION 00-00-00 — DATE PLOTTED => 4/4/2008 TIME PLOTTED => 4:48:56 PM

FOR REDUCED PLANS ORIGINAL SCALE IS IN MILLIMETERS 0 20 40 60 80

DGN FILE =>T:\13103\MS\pse\SAS Struc\CCO\SAS CCO42\04-0120f1_0197R01.dgn
USERNAME =>llorico

CU 04251 — EA 0120F1

DIST	COUNTY	ROUTE	KILOMETER POST TOTAL PROJECT	SHEET No	TOTAL SHEETS
04	SF	80	13.2/13.9	200R1	1204

REGISTERED ELECTRICAL ENGINEER 12/19/02 DATE

12-6-04
PLANS APPROVAL DATE

REGISTERED PROFESSIONAL ENGINEER JENS ERLINGSSON No. 8249 Exp. 9/30/06 ELECTRICAL STATE OF CALIFORNIA

PB POWER, Inc.
A Parsons Brinckerhoff Company
303 Second St., Suite 700N
San Francisco, CA 94107-1317

The State of California or its officers or agents shall not be responsible for the accuracy or completeness of electronic copies of this plan sheet.

Caltrans now has a web site! To get to the web site, go to http://www.dot.ca.gov

Caltrans Metric

UTILITY PANEL UP-205 (CKT #2096)

Location: SAS SUPERSTRUCTURE SERVICE PLATFORM #5

LOAD DESCRIPTION	LTG	REC	OTH.	CB		CB	LTG	REC	OTH.	LOAD DESCRIPTION
Recept (2) Eastbound North Barrier		360		20/1	1 A 2	20/1			10	CB-242A
Spare				20/1	3 B 4	20/1			20	CB-242B, 242C
Recept (2) Service Platform #5		360		20/1	5 C 6	20/1				Spare 1
Recept (2) Girder		360		20/1	7 A 8	20/1	738			Girder Lighting (18)
RTU #10E (PLC Power Supply)			100	20/1	9 B 10	20/1				Spare
RTU-#10E (Lighting & Receptacle)	105	180	150	20/1	11 C 12	20/1				Spare
TOTAL WATTS	105	1260	250				738		30 1	TOTAL VA

LOAD SUMMARY (INCLUDES .90 PF) (VA)

Lighting (At 100%): 843
Gen Use (1st 10 kVA at 100% Plus 50% of remainder): 1540 1

TOTAL kVA: 2.383 1

BALANCE (kVA)

Phase A - 1.468
Phase B - 0.120
Phase C - 0.795 1

VOLTAGE: 208/120 V
PHASE/WIRES: 3-phase, 4-wire
BUS RATING: 100 A
MAIN: 60 A
MOUNTING: Surface
K.A.I.C.: 10

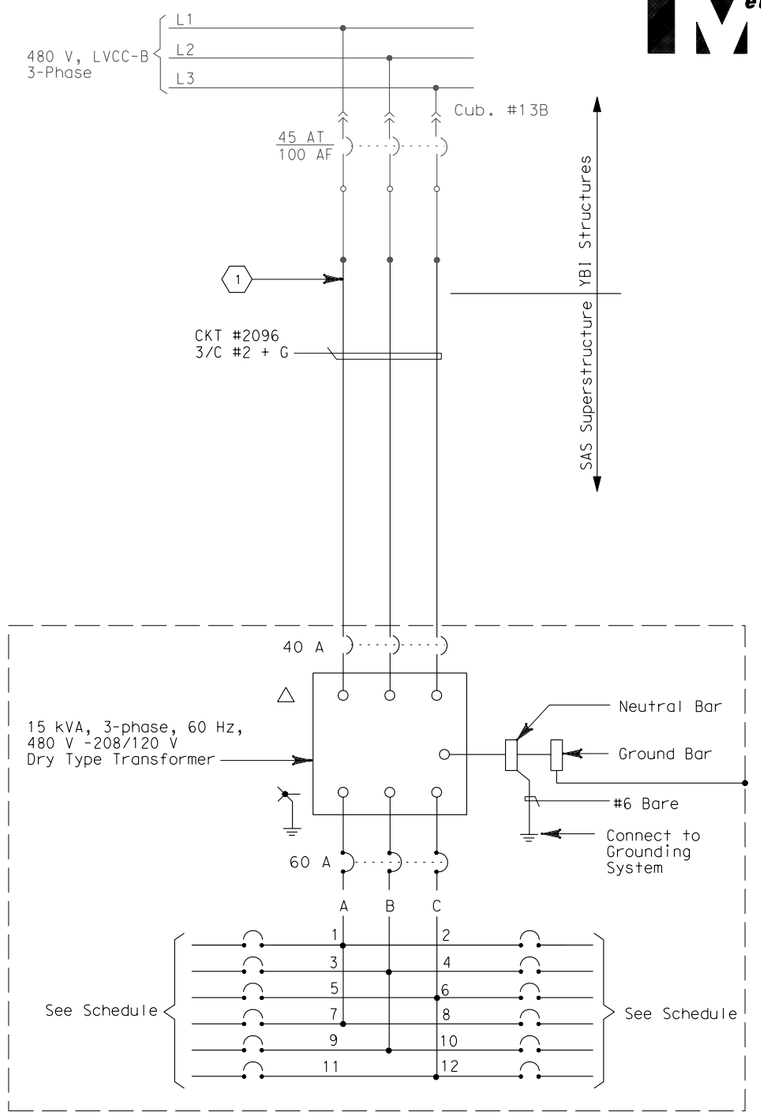

SHEET NOTES:

(1) The Contractor shall extend and coil 5.0 meters of cable in manhole #25. All cables shall be tagged with circuit numbers as shown.

NOTES:

1. The Contractor shall provide nameplates and circuit schedules as shown.
2. Install transformer/panelboard inside a PB-8A enclosure (fiberglass) to be sized by the Contractor.
3. References:
   - For LVCC-B single line diagram, see sheets E-32 thru E-34.
   - For circuit and conduit/cable tray schedules, see sheets starting at E-401.
   - For pull box schedule, see sheet E-169.

REGISTERED PROFESSIONAL ENGINEER MAXWELL FUMIO TAKAKI No. E 8651 Exp. 9/30/2008 ELECTRICAL STATE OF CALIFORNIA

FOR REVISION ONLY

REQUEST FOR INFORMATION NOT ADDRESSED IN THIS CCO REMAIN IN FORCE

MARK	DATE	DESCRIPTIONS	BY	CH'D	CCO#
1	02/19/08	ELECTRICAL MODIFICATIONS	MP EL	RR	42

REVISIONS

CONTRACT CHANGE ORDER NO._____
SHEET _____ OF _____

DETAILS
SAS SUPERSTRUCTURE ROADWAY EASTBOUND PANEL UP-205 SCHEDULE
NO SCALE

E-151

REVISED BY	DATE REVISED

CALCULATED/DESIGNED BY	DATE 7/01
JP	12/01
CHECKED BY	BL

DESIGN OVERSIGHT
BEHZAD GOLEMOHAMMADI

STATE OF CALIFORNIA - DEPARTMENT OF TRANSPORTATION
Caltrans

LAST REVISION 00-00-00
DATE PLOTTED => 4/4/2008
TIME PLOTTED => 4:49:19 PM

FOR REDUCED PLANS ORIGINAL SCALE IS IN MILLIMETERS 0 20 40 60 80

DGN FILE =>T:\13103\MS\pse\SAS Struc\CCO\SAS CCO42\04-0120f1_0200R01.dgn
USERNAME =>llorico

CU 04251 EA 0120F1

DIST	COUNTY	ROUTE	KILOMETER POST TOTAL PROJECT	SHEET No	TOTAL SHEETS
04	SF	80	13.2/13.9	208R2	1204

REGISTERED ELECTRICAL ENGINEER 12/19/02 DATE

12-6-04
PLANS APPROVAL DATE

REGISTERED PROFESSIONAL ENGINEER JENS ERLINGSSON No. 8249 Exp. 9/30/06 ELECTRICAL STATE OF CALIFORNIA

PB POWER, Inc.
A Parsons Brinckerhoff Company
303 Second St., Suite 700N
San Francisco, CA 94107-1317

The State of California or its officers or agents shall not be responsible for the accuracy or completeness of electronic copies of this plan sheet.

Caltrans now has a web site! To get to the web site, go to http://www.dot.ca.gov

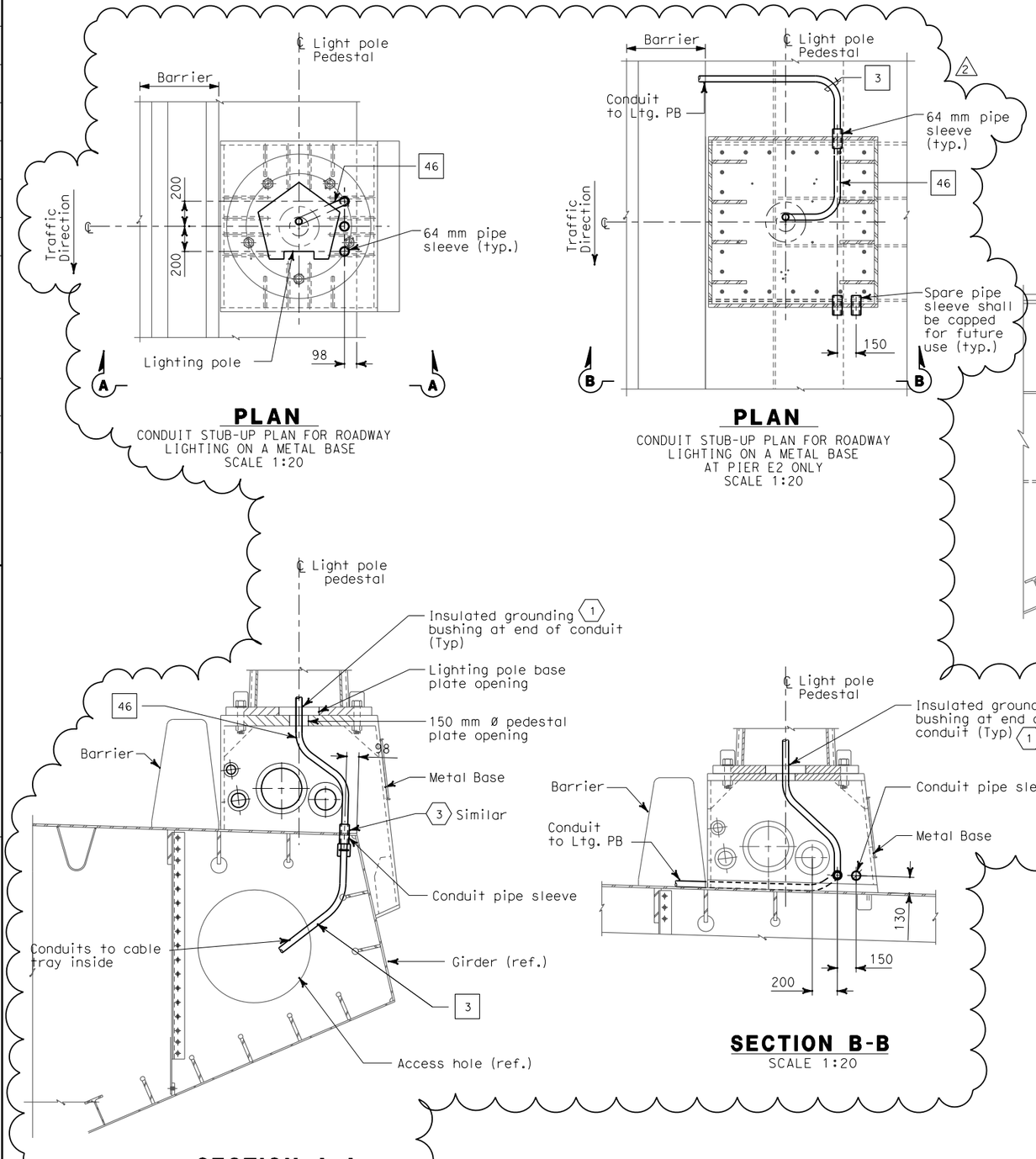

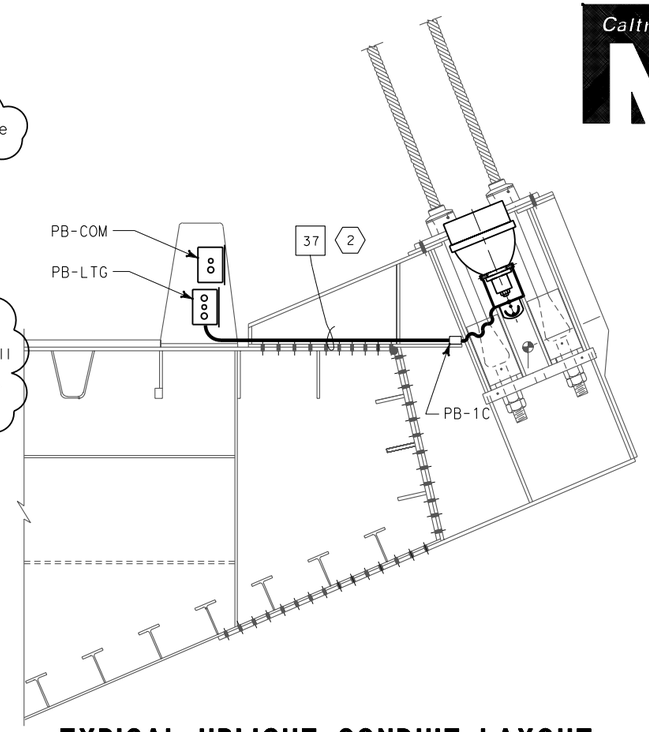

TYPICAL UPLIGHT CONDUIT LAYOUT
SCALE 1:20

SHEET NOTES:

1. Bond grounding bushing to ground lug of lighting pole with #6 bare copper wire.
2. Conduit shall be clear of all piping and pipe sleeve. Route conduit on top of deck plate, outside of girder box.
3. See Utility Detail No. 1 (Sheet No. 965 of 1204) for conduit penetration through girder plate and lighting pole metal base. The Contractor shall install sealant between the sleeve and conduit for future light pipe, plug and cap sleeve to prevent water or moisture from passing inside the sleeve.

NOTES:

1. References:
   - For lighting pole schedule, see sheet E-168.
   - For location of pull boxes inside girder, see sheets E-181 thru E-186.
   - For luminaire support details, see structural sheets.

REGISTERED PROFESSIONAL ENGINEER MANNELL FUMIO TAKAKI No. E 8651 Exp. 9/30/2008 ELECTRICAL STATE OF CALIFORNIA

FOR REVISION ONLY

REQUEST FOR INFORMATION NOT ADDRESSED IN THIS CCO REMAIN IN FORCE

MARK	DATE	DESCRIPTIONS	REV	CH'D	CCO#
2	02/19/08	ELECTRICAL MODIFICATIONS	MP EL RG	RR	42
1	10/16/06	REVISED SHEET NOTES	LR	MG	11

REVISIONS

CONTRACT CHANGE ORDER NO._____
SHEET _____ OF _____

DETAILS
SAS SUPERSTRUCTURE ROADWAY EASTBOUND CONDUIT LOCATIONS
SCALE AS NOTED

E-161

ALL DIMENSIONS ARE IN MILLIMETERS UNLESS OTHERWISE SHOWN.

FOR REDUCED PLANS ORIGINAL SCALE IS IN MILLIMETERS 0 20 40 60 80

DGN FILE =>T:\13103\MS\pse\SAS Struc\CCO\SAS CCO42\04-0120f1_0208R02.dgn
USERNAME =>llorico

CU 04251 EA 0120F1

LAST REVISION 00-00-00 DATE PLOTTED => 5/9/2008 TIME PLOTTED => 2:21:23 PM

STATE OF CALIFORNIA - DEPARTMENT OF TRANSPORTATION
Caltrans

DESIGN OVERSIGHT BEHZAD GOLEMOHAMMADI

CALCULATED/DESIGNED BY KG DATE 10/01 REVISED BY DATE REVISED
CHECKED BY AB 11/01

DIST	COUNTY	ROUTE	KILOMETER POST TOTAL PROJECT	SHEET No	TOTAL SHEETS
04	SF	80	13.2/13.9	209R1	1204

REGISTERED ELECTRICAL ENGINEER 12/19/02 DATE

12-6-04
PLANS APPROVAL DATE

REGISTERED PROFESSIONAL ENGINEER JENS ERLINGSSON No. 8249 Exp. 9/30/06 ELECTRICAL STATE OF CALIFORNIA

PB POWER, Inc.
A Parsons Brinckerhoff Company
303 Second St., Suite 700N
San Francisco, CA 94107-1317

The State of California or its officers or agents shall not be responsible for the accuracy or completeness of electronic copies of this plan sheet.

Caltrans now has a web site! To get to the web site, go to http://www.dot.ca.gov

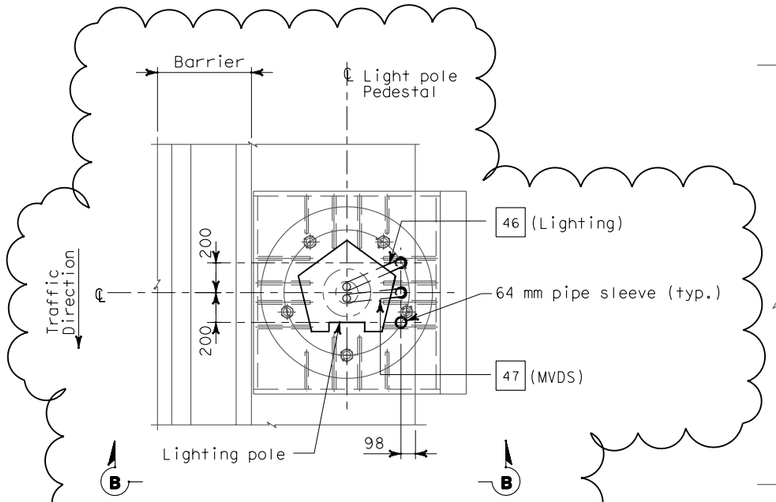

PLAN
CONDUIT STUB-UP PLAN FOR ROADWAY LIGHTING AND MVDS ON METAL BASE
SCALE 1:20

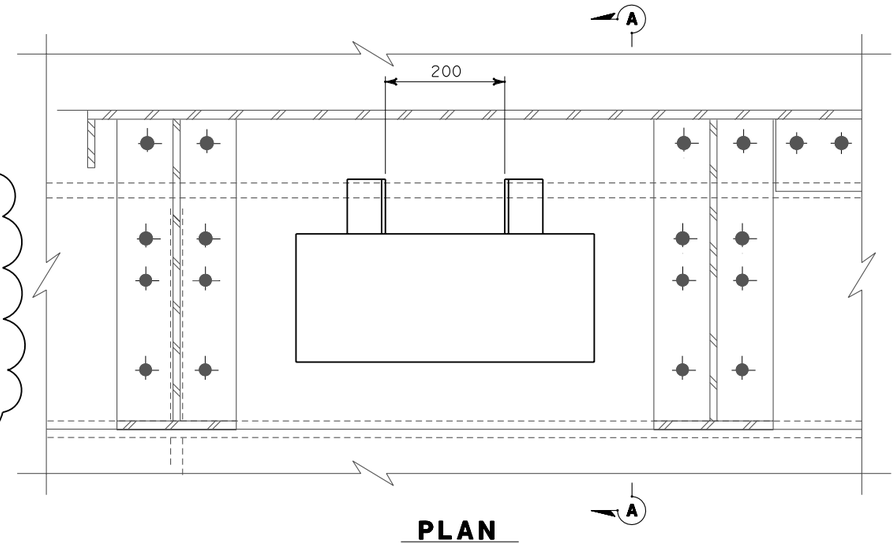

PLAN
PULL BOX IN STEEL BARRIER
SCALE 1:5

SHEET NOTES:

1. Bond grounding bushing to ground lug of lighting pole with #6 bare copper wire.
2. Deleted
3. Conduit penetration thru girder plate and lighting pole metal base, see Utility Detail No. 1 of Superstructure and Tower Drawings. To prevent moisture from passing inside the sleeve, the Contractor shall install sealant between the sleeve and conduit.

NOTES:

1. References:
   - For installation and typical details of TOS equipment, see sheets E-341 thru E-357.
   - For pull box schedule, see sheet E-169

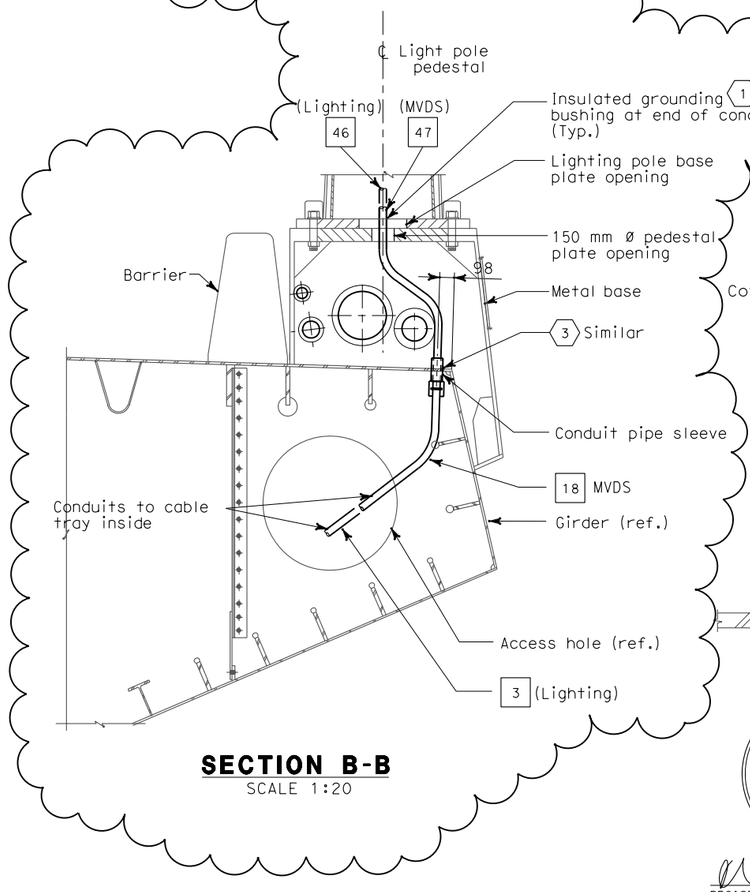

SECTION B-B
SCALE 1:20

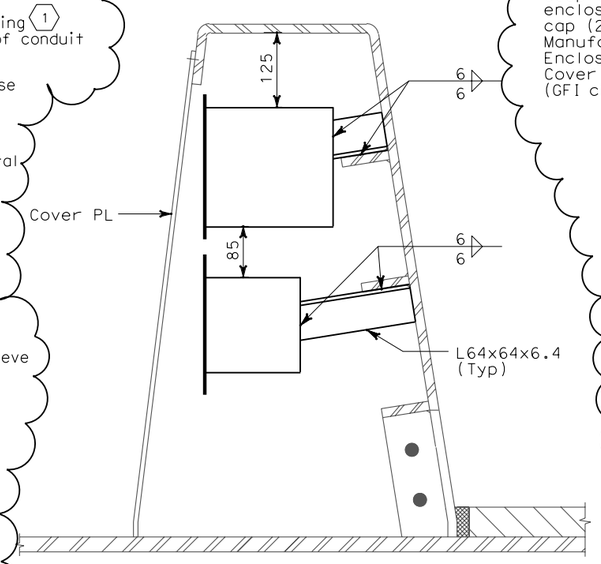

SECTION A-A
SCALE 1:5

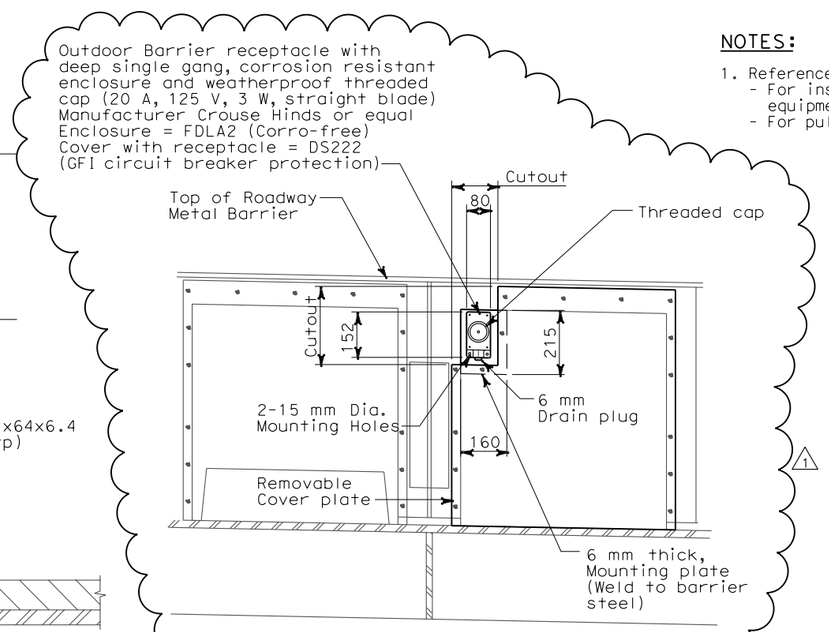

DETAIL 1
(TYPICAL ROADWAY BARRIER RECEPTACLE LOCATION)
SCALE: 1:10

REGISTERED PROFESSIONAL ENGINEER MARRELL FUMIO TAKAKI No. E 8651 Exp. 9/30/2008 ELECTRICAL STATE OF CALIFORNIA

REGISTERED ELECTRICAL ENGINEER
FOR REVISION ONLY

REQUEST FOR INFORMATION NOT ADDRESSED IN THIS CCO REMAIN IN FORCE

MARK	DATE	DESCRIPTIONS	BY	CH'D	CCO#
1	02/19/08	ELECTRICAL MODIFICATIONS	MP EL RG	RR	42

REVISIONS

CONTRACT CHANGE ORDER NO._____
SHEET _____ OF _____

DETAILS
SAS SUPERSTRUCTURE ROADWAY EASTBOUND CONDUIT LOCATIONS
SCALE AS NOTED

E-162

DATE	REVISED BY	DATE	REVISED
10/01	KG	11/01	AB

CALCULATED/DESIGNED BY — CHECKED BY

DESIGN OVERSIGHT — BEHZAD GOLEMOHAMMADI

STATE OF CALIFORNIA - DEPARTMENT OF TRANSPORTATION — Caltrans

LAST REVISION 00-00-00 — DATE PLOTTED => 5/9/2008 TIME PLOTTED => 2:21:51 PM

FOR REDUCED PLANS ORIGINAL SCALE IS IN MILLIMETERS 0 20 40 60 80

DGN FILE =>T:\13103\MS\pse\SAS Struc\CCO\SAS CCO42\04-0120f1_0209R01.dgn
USERNAME =>llorico

CU 04251 — EA 0120F1

DIST	COUNTY	ROUTE	KILOMETER POST TOTAL PROJECT	SHEET No	TOTAL SHEETS
04	SF	80	13.2/13.9	210R1	1204

REGISTERED ELECTRICAL ENGINEER 12/19/02 DATE

12-6-04
PLANS APPROVAL DATE

PB POWER, Inc.
A Parsons Brinckerhoff Company
303 Second St., Suite 700N
San Francisco, CA 94107-1317

REGISTERED PROFESSIONAL ENGINEER JENS ERLINGSSON No. 8249 Exp. 9/30/06 ELECTRICAL STATE OF CALIFORNIA

The State of California or its officers or agents shall not be responsible for the accuracy or completeness of electronic copies of this plan sheet.

Caltrans now has a web site! To get to the web site, go to http://www.dot.ca.gov

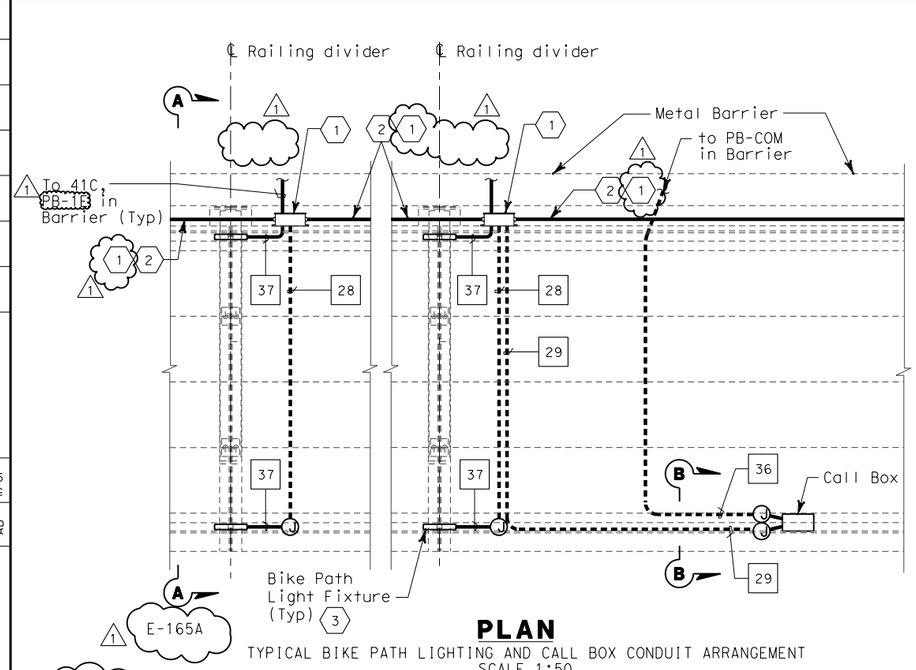

PLAN
TYPICAL BIKE PATH LIGHTING AND CALL BOX CONDUIT ARRANGEMENT
SCALE 1:50

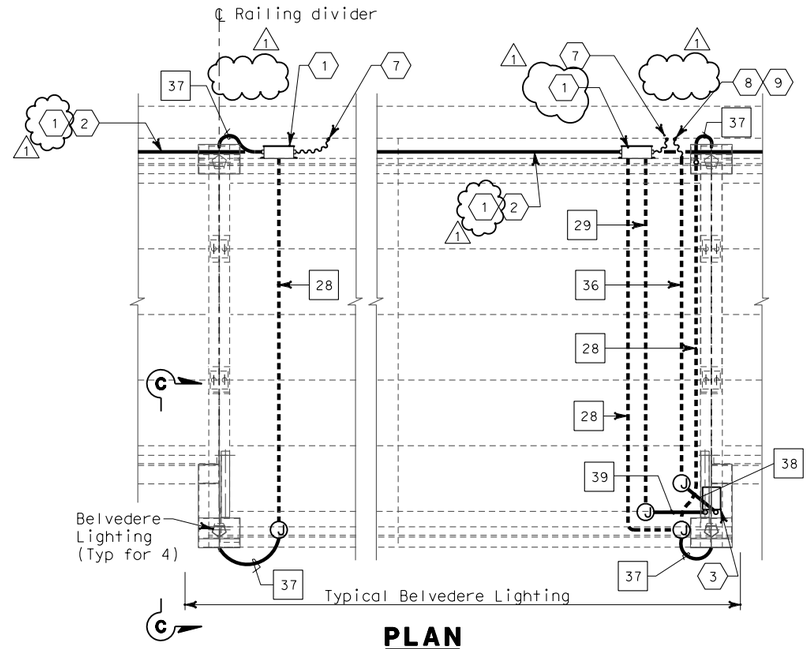

PLAN
CONDUIT ARRANGEMENT
SCALE 1:50

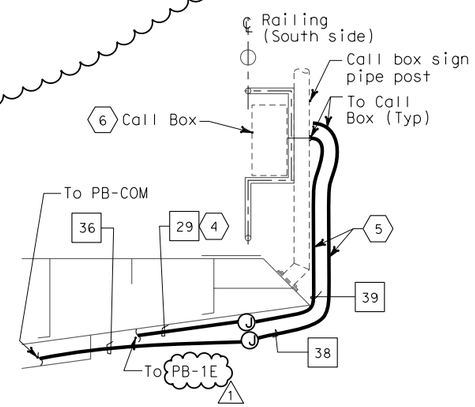

SECTION B-B
CONDUITS TO CALL BOX
SCALE 1:20

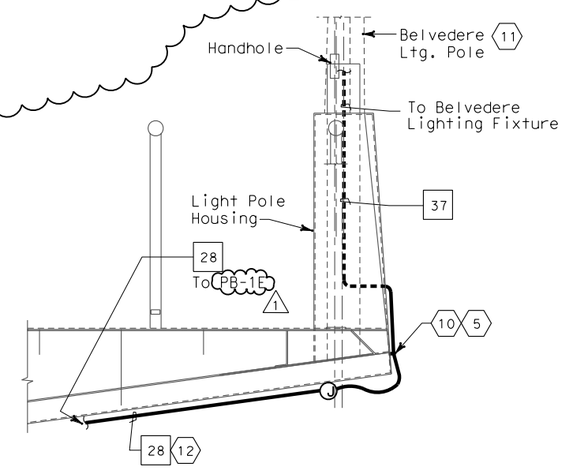

SECTION C-C
CONDUITS TO BELVEDERE LIGHTING
SCALE 1:20

SHEET NOTES:

1. PB-1E and conduit support, mounting details see sheet E-165A.
2. 41C, continued to the next PB-1E mounted along side at Bike Path deck.
3. For bike path light detail, see sheet E-172.
4. Weld connectors for conduit support under bike path.
5. Field locate support for metal-clad cable.
6. For connection and mounting details of call box on railings, refer to structural railing details.
7. 41C flex to Roadway concrete barrier PB-LTG.
8. 41C flex to Roadway concrete barrier PB-COM.
9. Provide reducer as required.
10. For connection and mounting details, see sheet E-172. Metal clad cable is supplied and part of Bike Path lighting assembly. Cable is shown solid for detail clarity only.
11. For details of Belvedere, see sheet E-173.
12. Weld connectors for conduit support under Bike Path. Field to locate support for conduit as required.

NOTES:

1. All exposed conduits and fittings installed between the roadway and the bike path shall be PVC coated galvanized steel.
2. See sheets E-135 through E-140 for SAS Superstructure Roadway Plans.

REGISTERED PROFESSIONAL ENGINEER MAXWELL FUMIO TAKAKI No. E 8651 Exp. 9/30/2008 ELECTRICAL STATE OF CALIFORNIA

FOR REVISION ONLY

REQUEST FOR INFORMATION NOT ADDRESSED IN THIS CCO REMAIN IN FORCE

MARK	DATE	DESCRIPTIONS	BY	CH'D	CCO#
1	02/19/08	ELECTRICAL MODIFICATIONS	MP EL	RR	42

REVISIONS

CONTRACT CHANGE ORDER NO._____
SHEET_____ OF _____

DETAILS
SAS SUPERSTRUCTURE ROADWAY EASTBOUND TYPICAL BIKE PATH PLANS AND SECTIONS
SCALE AS NOTED

E-165

ALL DIMENSIONS ARE IN MILLIMETERS UNLESS OTHERWISE SHOWN.

FOR REDUCED PLANS ORIGINAL SCALE IS IN MILLIMETERS 0 20 40 60 80

DGN FILE =>T:\13103\MS\pse\SAS Struc\CCO\SAS CCO42\04-0120f1_0210R01.dgn
USERNAME =>llorico

CU 04251 EA 0120F1

LAST REVISION 00-00-00 DATE PLOTTED => 4/4/2008 TIME PLOTTED => 4:50:23 PM

STATE OF CALIFORNIA - DEPARTMENT OF TRANSPORTATION
Caltrans

DESIGN OVERSIGHT BEHZAD GOLEMOHAMMADI

CALCULATED/DESIGNED BY KG DATE 10/01 REVISED BY DATE REVISED
CHECKED BY AB 11/01

DIST	COUNTY	ROUTE	KILOMETER POST TOTAL PROJECT	SHEET No	TOTAL SHEETS
04	SF	80	13.2/13.9	210S1	1204

Caltrans Metric

8-24-07
REGISTERED ELECTRICAL ENGINEER DATE

REGISTERED PROFESSIONAL ENGINEER MAXWELL FUMIO TAKAKI No. E 8651 Exp. 9/30/2008 ELECTRICAL STATE OF CALIFORNIA

PLANS APPROVAL DATE

PB AMERICAS, Inc.
A Parsons Brinckerhoff Company
303 Second St., Suite 700N
San Francisco, CA 94107-1317

The State of California or its officers or agents shall not be responsible for the accuracy or completeness of electronic copies of this plan sheet.

To get to the web site, go to: http://www.dot.ca.gov

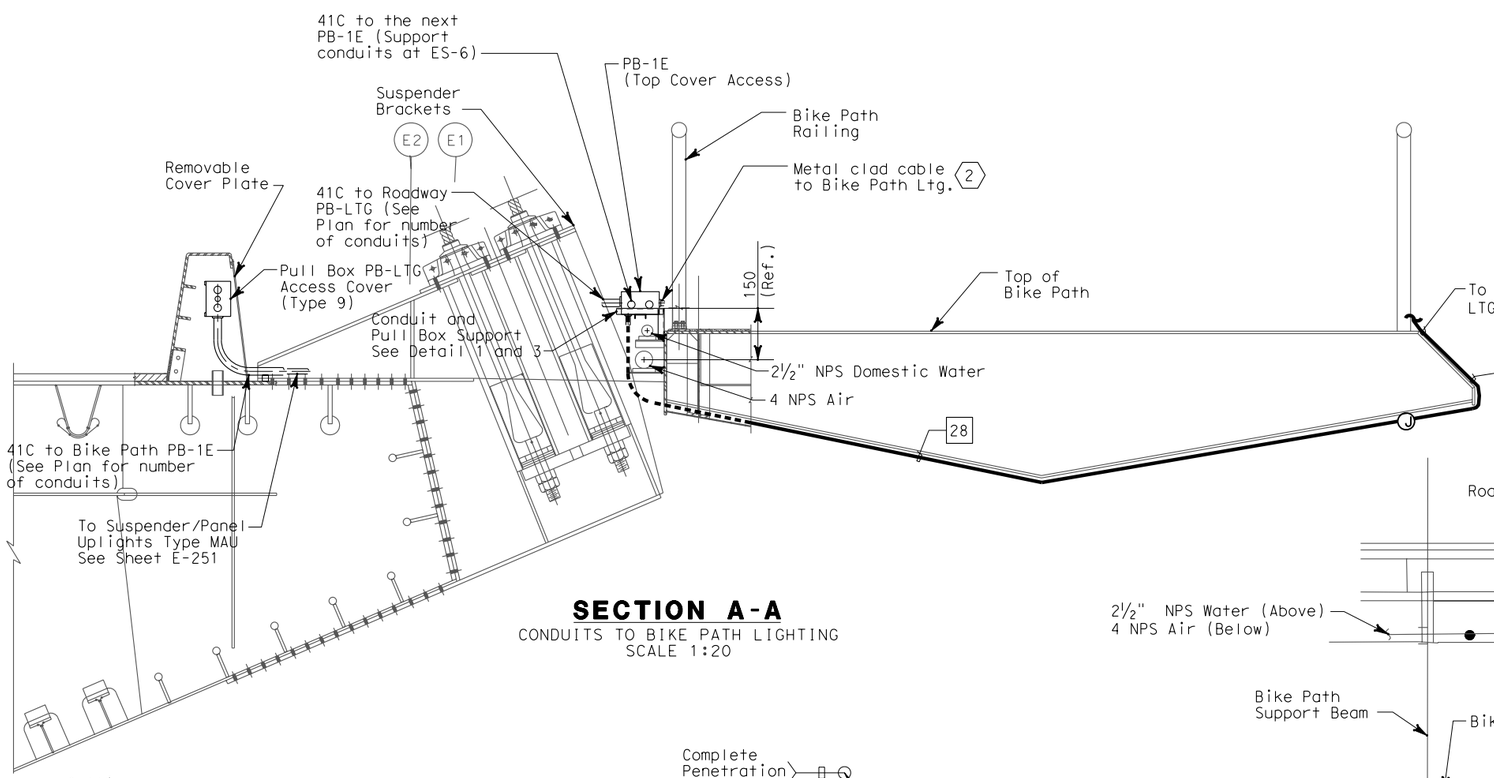

SECTION A-A

CONDUITS TO BIKE PATH LIGHTING
SCALE 1:20

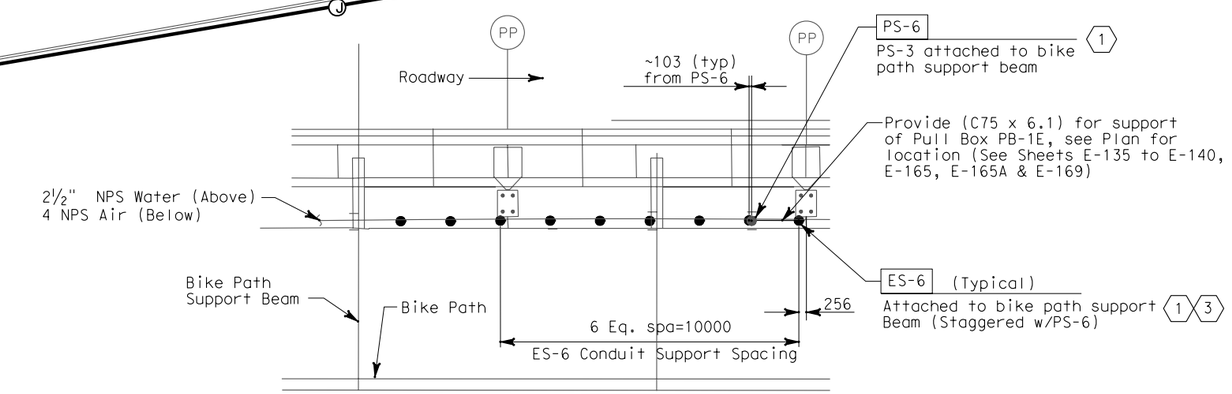

PLAN - DETAIL 1

TYPICAL CONDUIT SUPPORT
SCALE 1:10

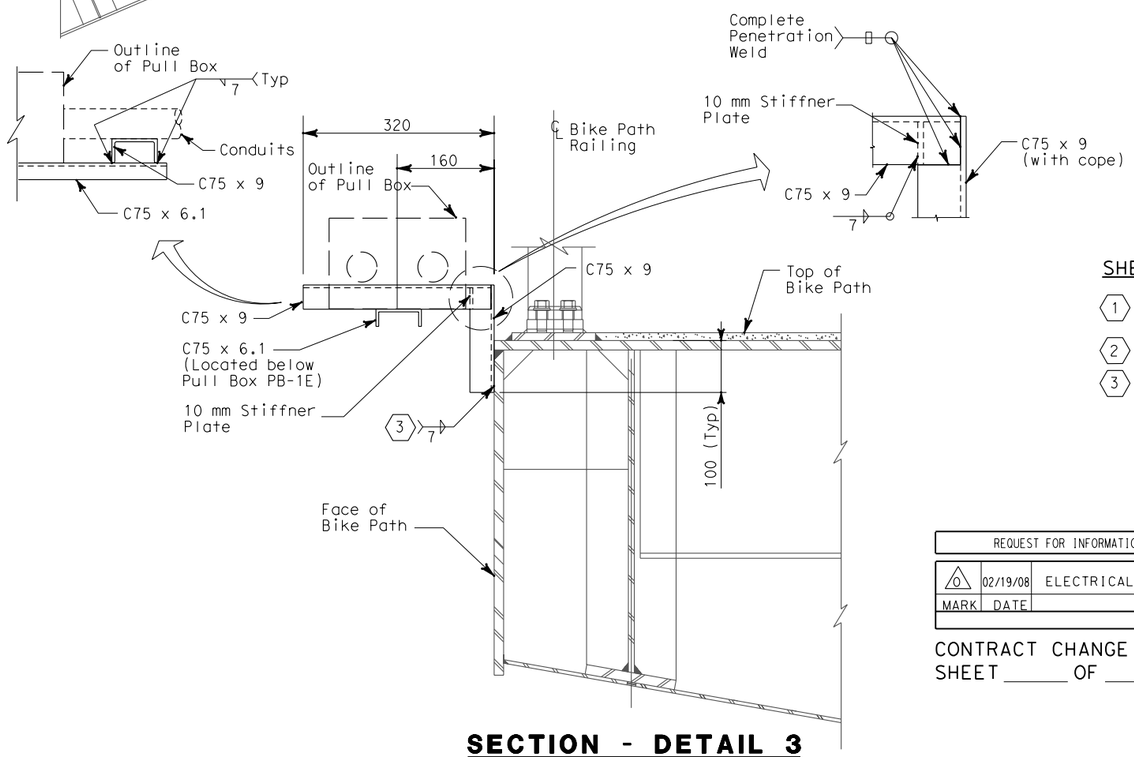

SECTION - DETAIL 3

CONDUIT AND PULL BOX SUPPORT
SCALE 1:5

SHEET NOTES

1. Mechanical pipe and supports not shown for clarity, see Mechanical drawings.
2. For bike path light detail, see Sheet E-172.
3. Contractor may field weld ES-6 support to face of bike path.

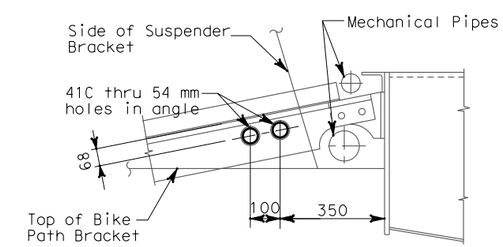

SECTION - DETAIL 2

LOCATION OF CONDUIT AT EMERGENCY ACCESS PLATFORM
SCALE 1:10
(For plan location, see sheets E-135, E-136, E-138 and E-139)

REQUEST FOR INFORMATION NOT ADDRESSED IN THIS CCO REMAIN IN FORCE					
0	02/19/08	ELECTRICAL MODIFICATIONS	MP EL	RR	42
MARK	DATE	DESCRIPTIONS	BY	CH'D	CCO#
REVISIONS					

CONTRACT CHANGE ORDER NO._____
SHEET _____ OF _____

DETAILS
SAS SUPERSTRUCTURE ROADWAY EASTBOUND TYPICAL BIKE PATH PLANS AND SECTIONS

SCALE AS NOTED

E-165A

THIS PLAN ACCURATE FOR ELECTRICAL WORK ONLY.

ALL DIMENSIONS ARE IN MILLIMETERS UNLESS OTHERWISE SHOWN

STATE OF CALIFORNIA - DEPARTMENT OF TRANSPORTATION
Caltrans

DESIGN OVERSIGHT: BEHZAD GOLEMOHAMMADI

CALCULATED/DESIGNED BY: EL | DATE: 2/07 | REVISED BY
CHECKED BY: RR | 7/07 | DATE REVISED

LAST REVISION 00-00-00 | DATE PLOTTED => 5/9/2008 | TIME PLOTTED => 2:22:34 PM

FOR REDUCED PLANS ORIGINAL SCALE IS IN MILLIMETERS 0 20 40 60 80

DGN FILE =>T:\13103\MS\pse\SAS Struc\CCO\SAS CC042\04-0120f1_0210S01.dgn
USERNAME =>llorico

CU 04251 | EA 0120F1

DIST	COUNTY	ROUTE	KILOMETER POST TOTAL PROJECT	SHEET No	TOTAL SHEETS
04	SF	80	13.2/13.9	211R1	1204

Jens Erlingsson 12/19/02
REGISTERED ELECTRICAL ENGINEER DATE

12-6-04
PLANS APPROVAL DATE

REGISTERED PROFESSIONAL ENGINEER JENS ERLINGSSON No. 8249 Exp. 9/30/06 ELECTRICAL STATE OF CALIFORNIA

PB POWER, Inc.
A Parsons Brinckerhoff Company
303 Second St., Suite 700N
San Francisco, CA 94107-1317

The State of California or its officers or agents shall not be responsible for the accuracy or completeness of electronic copies of this plan sheet.

Caltrans now has a web site! To get to the web site, go to http://www.dot.ca.gov

Caltrans Metric

LIGHTING POLE SCHEDULE

Circuit Number	Pole Number	Station	Location: Roadway side	Mounting Height (M)	Ltg. Fixture Type	Number/ Wattage	Remarks (Mounting Provisions)
S-2031	2031-1	55+89	North	20	MSR-2B-L	3-400 W	Pole mounted
A-2035					MAM-3	1-250 W	
S-2031	2031-2	56+29	North	20	MSR-2B-L	3-400 W	Pole mounted
A-2035					MAM-3	1-250 W	
S-2031	2031-3	59+99	North	20	MSR-2-L	2-400 W	Pole mounted
					MSR-2B-L	2-400 W	
A-2035					MAM-3	1-250 W	
S-2031	2031-4	60+49	North	20	MSR-2-L	2-400 W	Pole mounted
S-2031					MSR-2B-L	2-400 W	
A-2035					MAM-3	1-250 W	
S-2032	2032-1	61+01	North	20	MSR-2-L	2-400 W	Pole mounted
					MSR-2B-L	2-400 W	
A-2035					MAM-3	1-250 W	
S-2032	2032-2	61+54	North	20	MSR-2-L	2-400 W	Pole mounted
					MSR-2B-L	2-400 W	
A-2035					MAM-3	1-250 W	

BELVEDERE LIGHTING POLE AND FIXTURE SCHEDULE (1)

Circuit Number	Pole Number	Location	Mounting Height (M)	Ltg. Fixture Type	Number/ Wattage
LP219-2	20E-1	Belvedere 20E	4.3	MSV	2-35 W
LP219-2	20E-2		4.3	MSV	2-35 W
LP219-4	20E-3		4.3	MSV	2-35 W
LP219-4	20E-4		4.3	MSV	2-35 W
LP223-6	22E-1	Belvedere 22E	4.3	MSV	2-35 W
LP223-6	22E-2		4.3	MSV	2-35 W
LP223-8	22E-3		4.3	MSV	2-35 W
LP223-8	22E-4		4.3	MSV	2-35 W

NOTES:

1. References:
   - For roadway level lighting wiring diagram, see sheets E-143 thru E-145.
   - For roadway level lighting conduit diagram, see sheets E-135 thru E-140.

PIER 1 MAIN TOWER LIGHTS SCHEDULE (ROADWAY LEVEL)

Circuit Number	Station	Location: Roadway side	Location: Suspend at Panel Point	Mounting	Ltg. Fixture Type	Number/ Wattage	Remarks
PYLON LIGHTING							
A-3039	57+34	North	PP-35/36	Bridge deck	MAT-1B-D	2-1000 W	with Remote Ballast
A-3039	57+36	North	PP-36	Bridge deck	MAT-1C-D	1-1000 W	with Remote Ballast
A-3039	57+42	North	PP-36/37	Bridge deck	MAT-1A-D	2-1000 W	with Remote Ballast
A-3039	57+55	North	PP-39	Bridge deck	MAT-3-D	2-250 W	with Remote Ballast
A-3039	57+60	North	PP-40	Bridge deck	MAT-3-RC	2-250 W	with Remote Ballast
A-3039	57+66.7 (1)	South	West of PP-42 (1)	Bridge deck	MAT-1A-D	2-1000 W	with Remote Ballast
A-3040	58+05	North	PP-48/49	Bridge deck	MAT-1B-D	2-1000 W	with Remote Ballast
A-3040	58+03	North	PP-48	Bridge deck	MAT-1C-D	1-1000 W	with Remote Ballast
A-3040	57+97	North	PP-47/48	Bridge deck	MAT-1A-D	2-1000 W	with Remote Ballast
A-3040	57+84	North	PP-45	Bridge deck	MAT-3-D	2-250 W	with Remote Ballast
A-3040	57+79	North	PP-44	Bridge deck	MAT-3-RC	2-250 W	with Remote Ballast
A-3040	57+71.7 (1)	South	East of PP-42 (1)	Bridge deck	MAT-1A-D	2-1000 W	with Remote Ballast

LIGHTING FIXTURE TYPE DESIGNATION (1)

Example: MSR-2B-C (See Special provisions for additional information)
MSR = SAS Safety light
-2B = 400 Watts
-C Beam Angles

Location (Letter)		Function (Letter)		Application (Letter)		Number/ Lamp Wattage		Beam Angles (Letter)		Mounting Type (Letter)	
M	SAS	A	Aesthetic light	D	Downward flood light	1	1000 W	A		C	Cable
		S	Safety light	U	Upward flood light	2	400 W	B		D	Roadway deck
				R	Roadway light	3	250 W	C		PB	Pier Base/ Pole mount
				T	Pylon flood light	4	175 W			RC	Roadway at Cross beam
				M	Marker light	5	100 W			P	Pole mounted without lower/raiser
				P	Pylon marker light	6	50 W			L	Pole mounted with lower/raiser
				B	Bike path light						
				V	Belvedere light						
				L	Light pipe						

BIKE PATH FIXTURE SCHEDULE

Location	Mounting	Ltg. Fixture Type	Number/ Wattage	Remarks
Bike Path Structure	Bike Path Railway	MSB	1-40 W	Compact Fluorescent

REGISTERED PROFESSIONAL ENGINEER MAXWELL FUMIO TAKAKI No. E 8651 Exp. 9/30/2008 ELECTRICAL STATE OF CALIFORNIA

FOR REVISION ONLY

REQUEST FOR INFORMATION NOT ADDRESSED IN THIS CCO REMAIN IN FORCE

MARK	DATE	DESCRIPTIONS	BY	CH'D	CCO#
1	02/19/08	ELECTRICAL MODIFICATIONS	MP EL	RR	42

REVISIONS

CONTRACT CHANGE ORDER NO._____
SHEET _____ OF _____

DETAILS
SAS SUPERSTRUCTURE ROADWAY EASTBOUND LIGHTING SCHEDULES

NO SCALE

E-168

CALCULATED/ DESIGNED BY	JP	DATE 09/01	REVISED BY
CHECKED BY	BL	10/01	DATE REVISED

DESIGN OVERSIGHT
BEHZAD GOLEMOHAMMADI

STATE OF CALIFORNIA - DEPARTMENT OF TRANSPORTATION
Caltrans

LAST REVISION 00-00-00
DATE PLOTTED => 5/16/2008
TIME PLOTTED => 4:54:12 PM

FOR REDUCED PLANS ORIGINAL SCALE IS IN MILLIMETERS 0 20 40 60 80

DGN FILE =>T:\13103\MS\pse\SAS Struc\CCO\SAS CCO42\Issued to Caltrans 2008.05.09_do not revise\04-0120f1_0211R01.dgn
USERNAME =>llorico

CU 04251 EA 0120F1

DIST	COUNTY	ROUTE	KILOMETER POST TOTAL PROJECT	SHEET No	TOTAL SHEETS
04	SF	80	13.2/13.9	212R1	1204

Caltrans Metric

REGISTERED ELECTRICAL ENGINEER 12/19/02 DATE

12-6-04
PLANS APPROVAL DATE

REGISTERED PROFESSIONAL ENGINEER JENS ERLINGSSON No. 8249 Exp. 9/30/06 ELECTRICAL STATE OF CALIFORNIA

PB POWER, Inc.
A Parsons Brinckerhoff Company
303 Second St., Suite 700N
San Francisco, CA 94107-1317

The State of California or its officers or agents shall not be responsible for the accuracy or completeness of electronic copies of this plan sheet.

Caltrans now has a web site! To get to the web site, go to http://www.dot.ca.gov

PULL BOXES

Location	Type	Pull Box Size	Enclosure Type	Nameplate Pull Box Cover	Remarks
Roadway Barrier	PB-Com			Low Voltage - Call Box	Caltrans standard ES-9C (PB-9A)
Roadway Barrier	PB-Ltg			600 V - Electrical	Caltrans standard ES-9C (PB-9)
Roadway and miscellaneous	PB-1B	304 L x 254 W x 127 D	NEMA 4X	600 V - Electrical	Located at main suspender cable
Roadway and miscellaneous	PB-1C	152 L x 152 W x 102 D	NEMA 4X	600 V - Electrical	Located at suspender brackets
Bike Path	PB-1D	152 L x 203 W x 102 D	NEMA 4X	600 V - Electrical	
Bike Path	PB-1E	305 L x 254 W x 152 D	NEMA 4X	600 V - Electrical	
Inside Girder Box	PB-2A	406 L x 254 W x 152 D	NEMA 12	600 V - Electrical	
Service Platform	PB-2B	762 L x 610 W x 203 D	NEMA 4X	600 V - Electrical	
Inside Girder Box	PB-2C	915 L x 610 W x 610 D	NEMA 12	600 V - Electrical	Electrical vault-embedded in conc. deck
Inside Girder Box	PB-2K	1067 L x 915 W x 305 D	NEMA 12	600 V - Electrical	Electrical vault-surface/pendant mounted
Inside Girder Box	PB-2L	152 L x 152 W x 102 D	NEMA 12	600 V - Electrical	For future light pipe

SPLICE BOXES

Location	Type	Splice Box Size	Enclosure Type	Nameplate Splice Box Cover	Remarks
Inside Girder Box	PB-3A	1830 L x 915 W x 305 D	NEMA 12	Danger - High Voltage - Keep Out	
Inside Girder Box	PB-3B	813 L x 203 diameter	Cylindrical Housing	Fiber Optic	72 fibers to 12 fibers
Inside Girder Box	PB-3C	813 L x 203 diameter	Cylindrical Housing	Fiber Optic	72 fibers to 72 fibers

PANEL ENCLOSURES (1)

Location	Type	Cabinet/Terminal Box Size	Enclosure Type	Nameplate Cabinet/Terminal Cover	Remarks
Service Platform	PB-6C	See Panel Layout	NEMA 4X	See Panel Layout on E-305	For Navigation Relay Cabinet
Inside Girder Box	PB-7B	See Panel Layout	NEMA 12	See Panel Layout on E-321	For Scada Communication Terminal Box
Service Platform	PB-7C	508 H x 406 W x 203 D	NEMA 4X	Caltrans Telephone	Enclosure only - For Telephone Terminal Box
Inside Girder Box	PB-7D	508 H x 406 W x 203 D	NEMA 12	Caltrans Telephone	Enclosure only - For Telephone Terminal Box
Service Platform	PB-8A	Size by Contractor	NEMA 4X-Fiberglass	See Panel Schedules	Enclosure only - For Transformer/Panel

SAS SUPERSTRUCTURE EB

Location	Type	Pull Box Size	Enclosure Type	Nameplate Pull Box Cover	Remarks
Inside Light Pole	PB-2N	152 L x 152 W x 102 D	NEMA 12	TOS-MVDS	Cable Termination
Tower Platform	PB-2M	305 L x 305 W x 152 D	NEMA 12	TOS-MVDS	Cable Termination

SHEET NOTE:

(1) Panel enclosures shall be provided with padlock provisions.

REGISTERED PROFESSIONAL ENGINEER MAXWELL FUMIO TAKAKI No. E 8651 Exp. 9/30/2008 ELECTRICAL STATE OF CALIFORNIA

FOR REVISION ONLY

REQUEST FOR INFORMATION NOT ADDRESSED IN THIS CCO REMAIN IN FORCE

MARK	DATE	DESCRIPTIONS	BY	CH'D	CCO#
1	02/19/08	ELECTRICAL MODIFICATIONS	MP EL	RR	42

REVISIONS

CONTRACT CHANGE ORDER NO._____
SHEET _____ OF _____

DETAILS
SAS SUPERSTRUCTURE ROADWAY EASTBOUND PULLBOX SCHEDULES
NO SCALE

E-169

REVISED BY	DATE REVISED
JP	9/01
BL	11/01

CALCULATED/DESIGNED BY
CHECKED BY

DESIGN OVERSIGHT
BEHZAD GOLEMOHAMMADI

STATE OF CALIFORNIA - DEPARTMENT OF TRANSPORTATION
Caltrans

LAST REVISION 00-00-00
DATE PLOTTED => 4/4/2008
TIME PLOTTED => 4:51:48 PM

FOR REDUCED PLANS ORIGINAL SCALE IS IN MILLIMETERS 0 20 40 60 80

DGN FILE =>T:\13103\MS\pse\SAS Struc\CCO\SAS CCO42\04-0120f1_0212R01.dgn
USERNAME =>llorico

CU 04251

EA 0120F1

DIST	COUNTY	ROUTE	KILOMETER POST TOTAL PROJECT	SHEET No	TOTAL SHEETS
04	SF	80	13.2/13.9	215R1	1204

REGISTERED ELECTRICAL ENGINEER 12/19/02 DATE

12-6-04
PLANS APPROVAL DATE

REGISTERED PROFESSIONAL ENGINEER JENS ERLINGSSON No. 8249 Exp. 9/30/06 ELECTRICAL STATE OF CALIFORNIA

PB POWER, Inc.
A Parsons Brinckerhoff Company
303 Second St., Suite 700N
San Francisco, CA 94107-1317

The State of California or its officers or agents shall not be responsible for the accuracy or completeness of electronic copies of this plan sheet.

Caltrans now has a web site! To get to the web site, go to http://www.dot.ca.gov

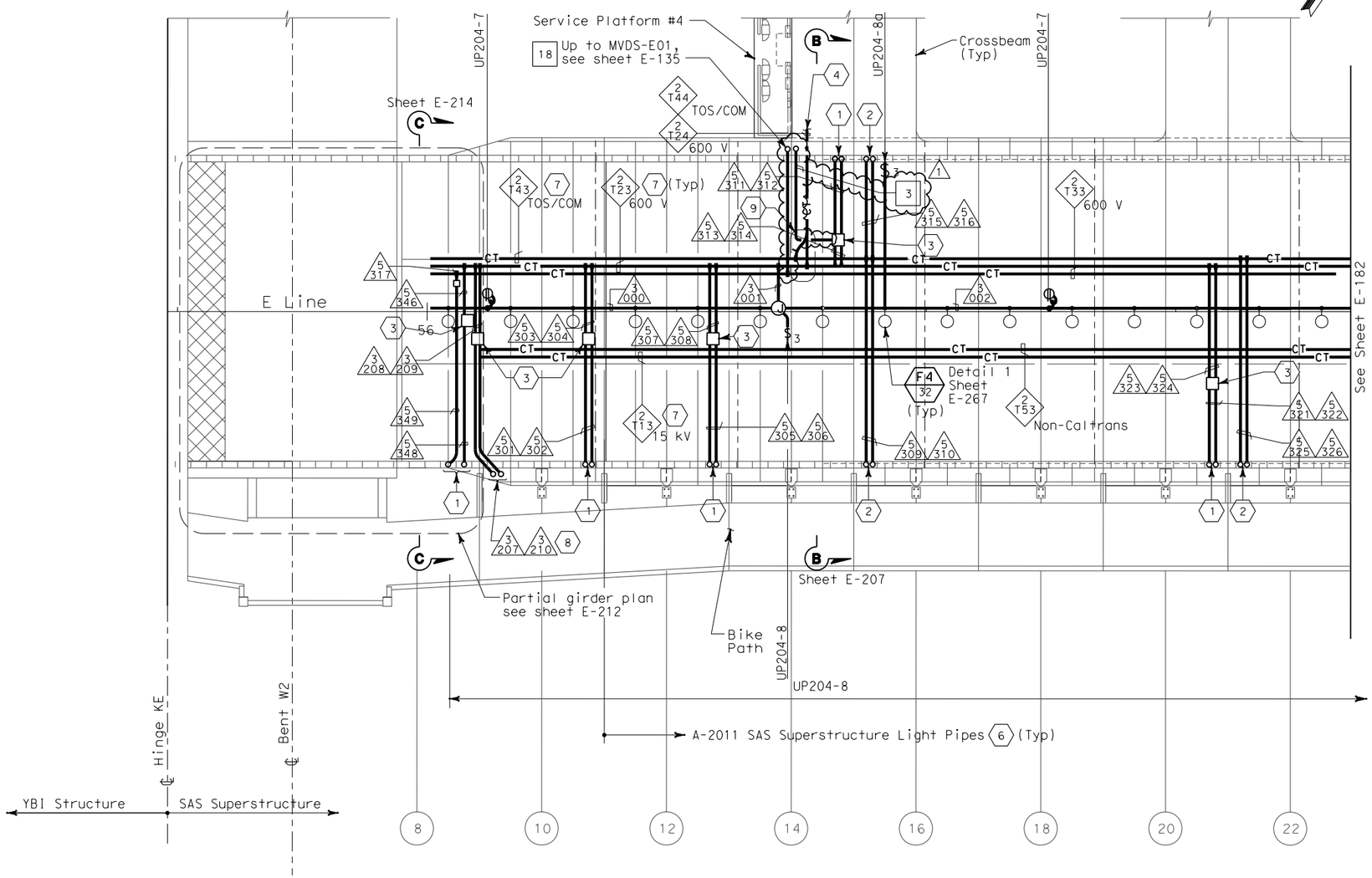

SAS SUPERSTRUCTURE - CONDUIT AND CABLE TRAY PLAN

SHEET NOTES:

1. Conduit up to PB-LTG located in barrier, see sheet E-135.
2. Conduit up to PB-COM located in barrier, see sheet E-135.
3. PB-2A, locate on top of floor.
4. For cable tray run and lighting inside crossbeam, see sheet E-114.
5. For lighting inside crossbeam, see sheet E-119.
6. For future light pipes. see sheets E-202 thru E-205. For light pipe schedule, see sheet E-217.
7. For cable tray & ground bar support, refer to sheet E-208.
8. Up to suspension cable lighting, for continuation see sheet E-135.
9. For fiber splice tray detail. Refer to sheet E-211.

NOTES:

1. References:
   - TOS equipment is shown for conduit routing only. For typical details of TOS controller and devices, see sheets E-344 through E-346.
   - For types of pull boxes, splice boxes and enclosures, see sheet E-169.
   - For bridge grounding plan, see sheet E-196.
   - For circuit and conduit/cable tray schedules, see sheets starting at E-401.
2. For other work related to Hinge KE and items not shown on this sheet, see Electrical Special Provisions.
3. The girder lighting fixtures are shown diagrammatically.Contractor shall install fixtures at railing posts with a maximum of 8000 mm between fixtures. For types and typical lighting fixture installation details, see sheet E-206.
4. The cable trays are shown diagrammatically. For typical girder cable tray plans and sections, see sheets E-207 and E-208.

REGISTERED PROFESSIONAL ENGINEER MAXWELL FUMIO TAKAKI No. E 8651 Exp. 9/30/2008 ELECTRICAL STATE OF CALIFORNIA

FOR REVISION ONLY

REQUEST FOR INFORMATION NOT ADDRESSED IN THIS CCO REMAIN IN FORCE

MARK	DATE	DESCRIPTIONS	BY	CH'D	CCO#
1	02/19/08	ELECTRICAL MODIFICATIONS	MP EL	RR	42

REVISIONS

CONTRACT CHANGE ORDER NO._____
SHEET _____ OF _____

SAS SUPERSTRUCTURE GIRDER EASTBOUND
LIGHTING AND ELECTRICAL SYSTEMS

SCALE 1:200

E-181

THIS PLAN IS ACCURATE FOR ELECTRICAL WORK ONLY.

ALL DIMENSIONS ARE IN METERS UNLESS OTHERWISE SHOWN

FOR REDUCED PLANS ORIGINAL SCALE IS IN MILLIMETERS 0 20 40 60 80

DGN FILE =>T:\13103\MS\pse\SAS Struc\CCO\SAS CC042\04-0120f1_0215R01.dgn
USERNAME =>llorico

CU 04251

EA 0120F1

STATE OF CALIFORNIA - DEPARTMENT OF TRANSPORTATION
Caltrans

DESIGN OVERSIGHT
BEHZAD GOLEMOHAMMADI

CALCULATED/DESIGNED BY EDC
CHECKED BY CYF

DATE 08/02 REVISED BY
08/02 DATE REVISED

LAST REVISION 00-00-00
DATE PLOTTED => 4/4/2008
TIME PLOTTED => 4:52:09 PM

DIST	COUNTY	ROUTE	KILOMETER POST TOTAL PROJECT	SHEET No	TOTAL SHEETS
04	SF	80	13.2/13.9	218R1	1204

REGISTERED ELECTRICAL ENGINEER 12/19/02 DATE

12-6-04
PLANS APPROVAL DATE

REGISTERED PROFESSIONAL ENGINEER JENS ERLINGSSON No. 8249 Exp. 9/30/06 ELECTRICAL STATE OF CALIFORNIA

PB POWER, Inc.
A Parsons Brinckerhoff Company
303 Second St., Suite 700N
San Francisco, CA 94107-1317

The State of California or its officers or agents shall not be responsible for the accuracy or completeness of electronic copies of this plan sheet.

Caltrans now has a web site! To get to the web site, go to http://www.dot.ca.gov

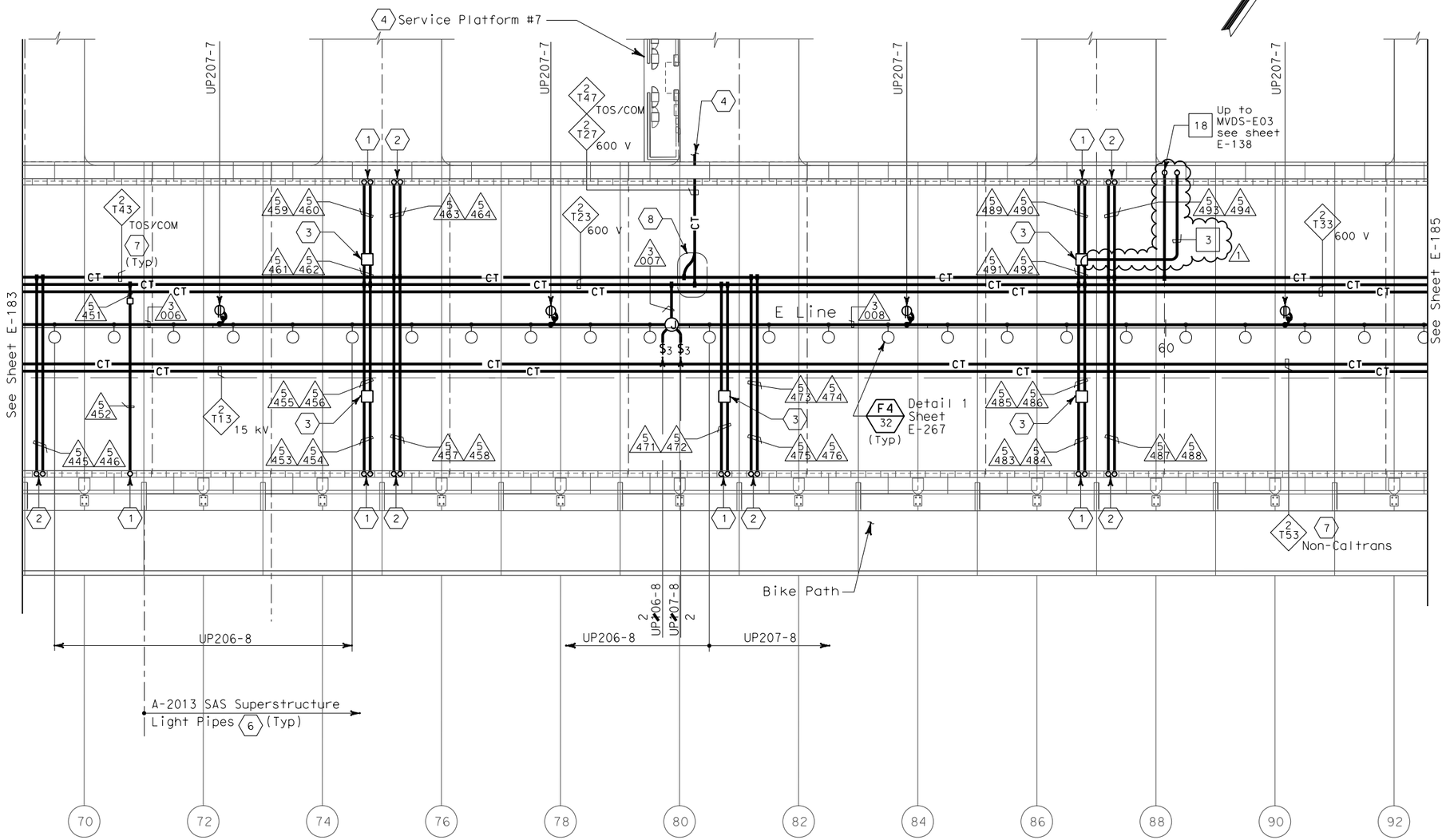

SHEET NOTES:

1. Conduit up to PB-LTG located in barrier, see sheet E-138.
2. Conduit up to PB-COM located in barrier, see sheet E-138
3. PB-2A, locate on top of floor.
4. For cable tray run and lighting inside crossbeam, see sheet E-117.
5. For lighting inside crossbeam, see sheet E-119.
6. For future light pipes, see sheets E-202 thru E-204. For light pipe schedule, see sheet E-217.
7. For cable tray & ground bar support, refer to sheet E-208.
8. For fiber splice tray detail. Refer to sheet E-355.

NOTES:

1. References:
   - TOS equipment is shown for conduit routing only. For typical details of TOS controller and devices, see sheets E-344 through E-357.
   - For types of pull boxes, splice boxes and enclosures, see sheet E-169.
   - For bridge grounding plan, see sheet E-196.
   - For circuit and conduit/cable tray schedules, see sheets starting at E-401.
2. For other work related to items not shown on this sheet, see Electrical Special Provisions.
3. The girder lighting fixtures are shown diagrammatically.Contractor shall install fixtures at railing posts with a maximum of 8000 mm between fixtures. For types and typical lighting fixture installation details, see sheet E-206.
4. The cable trays are shown diagrammatically. For typical girder cable tray plans and sections, see sheets E-207 and E-208.

SAS SUPERSTRUCTURE - CONDUIT AND CABLE TRAY PLAN

REGISTERED PROFESSIONAL ENGINEER MAXWELL FUMIO TAKAKI No. E 8651 Exp. 9/30/2008 ELECTRICAL STATE OF CALIFORNIA

FOR REVISION ONLY

REQUEST FOR INFORMATION NOT ADDRESSED IN THIS CCO REMAIN IN FORCE

MARK	DATE	DESCRIPTIONS	BY	CH'D	CCO#
1	02/19/08	ELECTRICAL MODIFICATIONS	MP EL	RR	42

REVISIONS

CONTRACT CHANGE ORDER NO._____
SHEET _____ OF _____

SAS SUPERSTRUCTURE GIRDER EASTBOUND
LIGHTING AND ELECTRICAL SYSTEMS

SCALE 1:200

E-184

THIS PLAN IS ACCURATE FOR ELECTRICAL WORK ONLY.

ALL DIMENSIONS ARE IN METERS UNLESS OTHERWISE SHOWN.

DATE	REVISED BY	DATE	REVISED
08/02		08/02	

CALCULATED/DESIGNED BY EDC
CHECKED BY CYF

DESIGN OVERSIGHT
BEHZAD GOLEMOHAMMADI

STATE OF CALIFORNIA - DEPARTMENT OF TRANSPORTATION
Caltrans

FOR REDUCED PLANS ORIGINAL SCALE IS IN MILLIMETERS 0 20 40 60 80

DGN FILE =>T:\13103\MS\pse\SAS Struc\CCO\SAS CC042\04-0120f1_0218R01.dgn
USERNAME =>llorico

CU 04251

EA 0120F1

LAST REVISION 00-00-00
DATE PLOTTED => 4/4/2008
TIME PLOTTED => 4:52:29 PM

DIST	COUNTY	ROUTE	KILOMETER POST TOTAL PROJECT	SHEET No	TOTAL SHEETS
04	SF	80	13.2/13.9	219R1	1204

REGISTERED ELECTRICAL ENGINEER 12/19/02 DATE

12-6-04
PLANS APPROVAL DATE

REGISTERED PROFESSIONAL ENGINEER JENS ERLINGSSON No. 8249 Exp. 9/30/06 ELECTRICAL STATE OF CALIFORNIA

PB POWER, Inc.
A Parsons Brinckerhoff Company
303 Second St., Suite 700N
San Francisco, CA 94107-1317

The State of California or its officers or agents shall not be responsible for the accuracy or completeness of electronic copies of this plan sheet.

Caltrans now has a web site! To get to the web site, go to http://www.dot.ca.gov

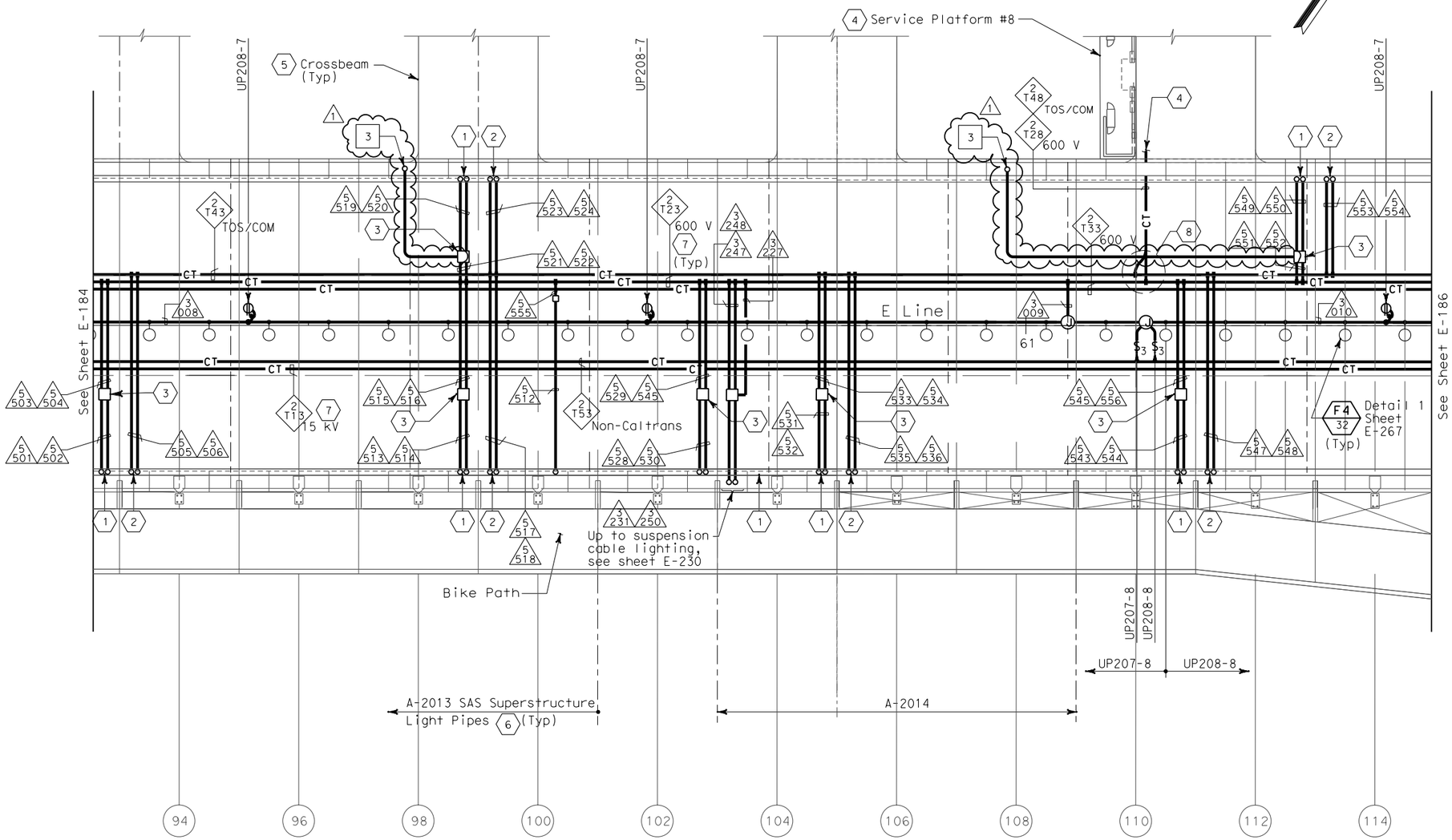

SHEET NOTES:

1. Conduit up to PB-LTG located in barrier, see sheet E-139.
2. Conduit up to PB-COM located in barrier, see sheet E-139.
3. PB-2A, locate on top of floor.
4. For cable tray run and lighting inside crossbeam, see sheet E-118.
5. For lighting inside crossbeam, see sheet E-119.
6. For future light pipes, see sheets E-202 thru E-204. For light pipe schedule, see sheet E-217.
7. For cable tray & ground bar support, refer to sheet E-208.
8. For fiber splice tray detail, refer to sheet E-355.

NOTES:

1. References:
   - TOS equipment is shown for conduit routing only. For typical details of TOS controller and devices, see sheets E-344 through E-357.
   - For types of pull boxes, splice boxes and enclosures, see sheet E-169.
   - For bridge grounding plan, see sheet E-196.
   - For circuit and conduit/cable tray schedules, see sheets starting at E-401.
2. For other work related to items not shown on this sheet, see Electrical Special Provisions.
3. The girder lighting fixtures are shown diagrammatically.Contractor shall install fixtures at railing posts with a maximum of 8000 mm between fixtures. For types and typical lighting fixture installation details, see sheet E-206.
4. The cable trays are shown diagrammatically. For typical girder cable tray plans and sections, see sheets E-207 and E-208.

SAS SUPERSTRUCTURE - CONDUIT AND CABLE TRAY PLAN

REGISTERED PROFESSIONAL ENGINEER MANUELL FUMIO TAKAKI No. E 8651 Exp. 9/30/2008 ELECTRICAL STATE OF CALIFORNIA

FOR REVISION ONLY

REQUEST FOR INFORMATION NOT ADDRESSED IN THIS CCO REMAIN IN FORCE

MARK	DATE	DESCRIPTIONS	BY	CH'D	CCO#
1	02/19/08	ELECTRICAL MODIFICATIONS	MP EL	RR	42

REVISIONS

CONTRACT CHANGE ORDER NO._____
SHEET _____ OF _____

SAS SUPERSTRUCTURE GIRDER EASTBOUND
LIGHTING AND ELECTRICAL SYSTEMS

SCALE 1:200

E-185

THIS PLAN IS ACCURATE FOR ELECTRICAL WORK ONLY.

ALL DIMENSIONS ARE IN METERS UNLESS OTHERWISE SHOWN.

FOR REDUCED PLANS ORIGINAL SCALE IS IN MILLIMETERS 0 20 40 60 80

DGN FILE =>T:\13103\MS\pse\SAS Struc\CCO\SAS CC042\04-0120f1_0219R01.dgn
USERNAME =>llorico

CU 04251 EA 0120F1

DATE PLOTTED => 4/4/2008
TIME PLOTTED => 4:52:51 PM

LAST REVISION 00-00-00

STATE OF CALIFORNIA - DEPARTMENT OF TRANSPORTATION
Caltrans

DESIGN OVERSIGHT
BEHZAD GOLEMOHAMMADI

CALCULATED/DESIGNED BY EDC
CHECKED BY CYF

DATE	REVISED BY	DATE REVISED
08/02		08/02

DIST	COUNTY	ROUTE	KILOMETER POST TOTAL PROJECT	SHEET No	TOTAL SHEETS
04	SF	80	13.2/13.9	222R1	1204

Jens Erlingsson 12/19/02
REGISTERED ELECTRICAL ENGINEER DATE

12-6-04
PLANS APPROVAL DATE

REGISTERED PROFESSIONAL ENGINEER JENS ERLINGSSON No. 8249 Exp. 9/30/06 ELECTRICAL STATE OF CALIFORNIA

PB POWER, Inc.
A Parsons Brinckerhoff Company
303 Second St., Suite 700N
San Francisco, CA 94107-1317

The State of California or its officers or agents shall not be responsible for the accuracy or completeness of electronic copies of this plan sheet.

Caltrans now has a web site! To get to the web site, go to http://www.dot.ca.gov

Caltrans Metric

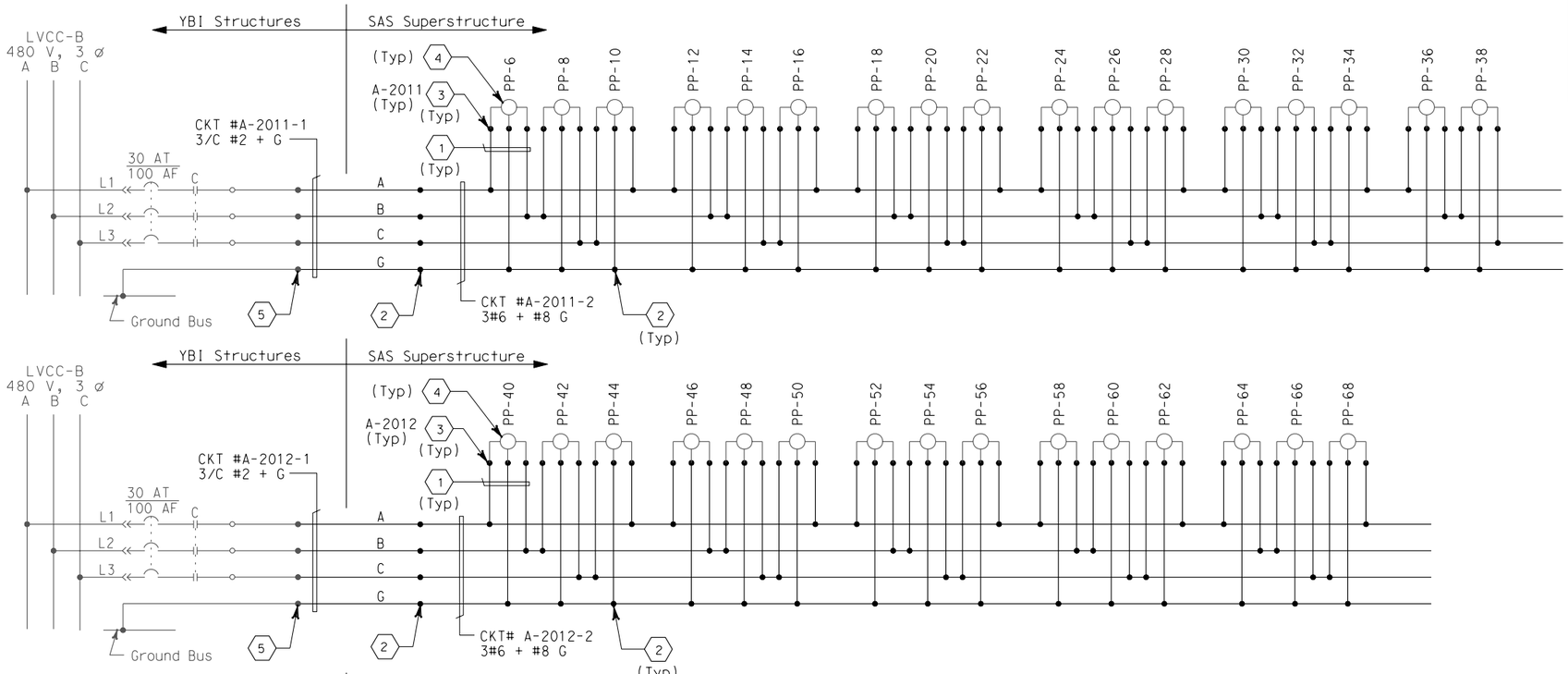

SHEET NOTES:

1. 2#10 + #10 G single conductors.
2. Conductors spliced in pull box PB-2A (1) located inside the girder.
3. Future light pipe connections. Coil and tape end of conductors ~~in the first~~ pull box ~~PB-2A~~ PB-1B (1) located ~~inside girder~~ inside barrier.
4. Future light pipe not included in this contract.
5. The Contractor shall extend and coil 5.0 meters of cable in manhole #25. All cables shall be tagged with circuit numbers as shown.

3

NOTES:

1. References:
   - For LVCC-B single line diagrams, see sheets E-32 to E-34.
   - For light pipe schedules, see sheet E-217.
   - For circuit and conduit/cable tray schedules, see sheets starting at E-401.
   - For typical pull box schedules, see sheet E-169.

REGISTERED PROFESSIONAL ENGINEER MANNELL FUMIO TAKAKI No. E 8651 Exp. 9/30/2008 ELECTRICAL STATE OF CALIFORNIA

FOR REVISION ONLY

REQUEST FOR INFORMATION NOT ADDRESSED IN THIS CCO REMAIN IN FORCE

MARK	DATE	DESCRIPTIONS	BY	CH'D	CCO#
1	02/19/08	ELECTRICAL MODIFICATIONS	MP EL	RR	42

REVISIONS

CONTRACT CHANGE ORDER NO._____
SHEET _____ OF _____

DETAILS
SAS SUPERSTRUCTURE GIRDER EASTBOUND 480 V LIGHT PIPE WIRING DIAGRAM

NO SCALE

3 **REVISED PER ADDENDUM NO. 3 DATED NOVEMBER 7, 2005**

E-189

DATE	REVISED BY	CALCULATED/ DESIGNED BY	DESIGN OVERSIGHT
08/02	EDC	CYF	BEHZAD GOLEMOHAMMADI
08/02	DATE REVISED	CHECKED BY	

STATE OF CALIFORNIA - DEPARTMENT OF TRANSPORTATION
Caltrans

LAST REVISION 00-00-00
DATE PLOTTED => 4/4/2008
TIME PLOTTED => 4:53:11 PM

DIST	COUNTY	ROUTE	KILOMETER POST TOTAL PROJECT	SHEET No	TOTAL SHEETS
04	SF	80	13.2/13.9	247R1	1204

REGISTERED ELECTRICAL ENGINEER 12/19/02 DATE

12-6-04
PLANS APPROVAL DATE

PB POWER, Inc.
A Parsons Brinckerhoff Company
303 Second St., Suite 700N
San Francisco, CA 94107-1317

REGISTERED PROFESSIONAL ENGINEER JENS ERLINGSSON No. 8249 Exp. 9/30/06 ELECTRICAL STATE OF CALIFORNIA

The State of California or its officers or agents shall not be responsible for the accuracy or completeness of electronic copies of this plan sheet.

Caltrans now has a web site! To get to the web site, go to http://www.dot.ca.gov

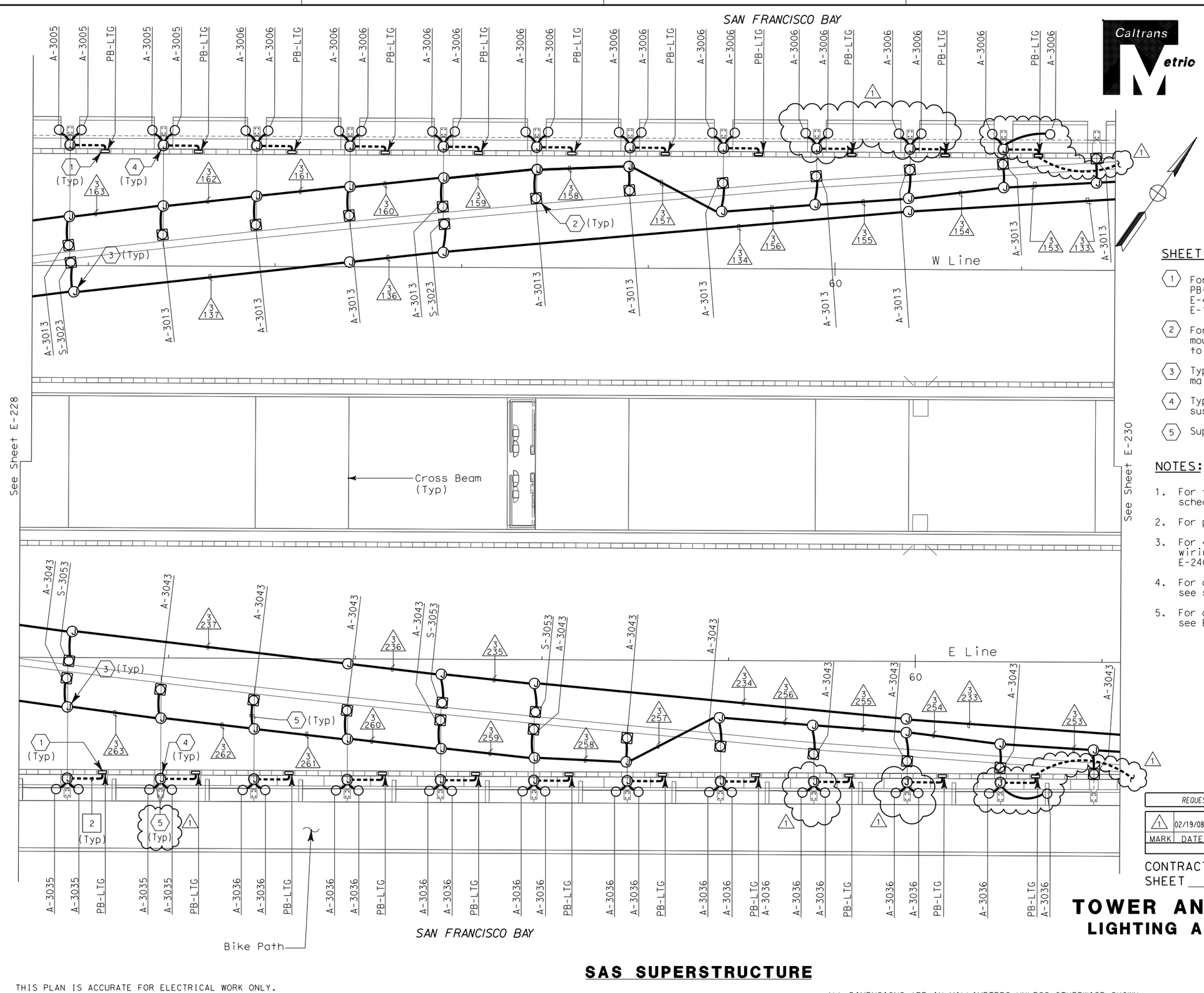

SHEET NOTES:

1. For additional conduits and actual location from PB-LTG, see SAS Superstructure Roadway Plans: E-49 (Westbound) E-138 (Eastbound)
2. For tower and suspension cable lighting mounting details, see sheets E-251 and E-257 to E-261.
3. Type PB-1B junction box is mounted on main suspension cable.
4. Type PB-1C junction box is mounted on suspender brackets.
5. Supplied with lighting fixture assembly.

NOTES:

1. For tower and suspension cable lighting schedule see sheets E-271 to E-272.
2. For pull box schedule see sheets E-83 & E-169.
3. For 480 V main suspension cable lighting wiring diagrams, see sheets E-236 through E-240 and E-243 through E-247.
4. For circuit and conduit/cable tray schedules, see sheets starting at E-401.
5. For other related work not shown on this sheet, see Electrical Special Provisions.

REGISTERED PROFESSIONAL ENGINEER MAXWELL FUMIO TAKAKI No. E 8651 Exp. 9/30/2008 ELECTRICAL STATE OF CALIFORNIA

FOR REVISION ONLY

REQUEST FOR INFORMATION NOT ADDRESSED IN THIS CCO REMAIN IN FORCE

MARK	DATE	DESCRIPTIONS	BY	CH'D	CCO#
1	02/19/08	ELECTRICAL MODIFICATIONS	MP EL	RR	42

REVISIONS

CONTRACT CHANGE ORDER NO._____
SHEET _____ OF _____

TOWER AND SUSPENSION CABLE
LIGHTING AND ELECTRICAL SYSTEMS

SCALE 1:200

SAS SUPERSTRUCTURE

E-229

THIS PLAN IS ACCURATE FOR ELECTRICAL WORK ONLY.

ALL DIMENSIONS ARE IN MILLIMETERS UNLESS OTHERWISE SHOWN

FOR REDUCED PLANS ORIGINAL SCALE IS IN MILLIMETERS 0 20 40 60 80

DGN FILE =>T:\13103\MS\pse\SAS Struc\CCO\SAS CC042\04-0120f1_0247R01.dgn
USERNAME =>llorico

CU 04251 EA 0120F1

STATE OF CALIFORNIA - DEPARTMENT OF TRANSPORTATION
Caltrans

DESIGN OVERSIGHT: BEHZAD GOLEMOHAMMADI

CALCULATED/DESIGNED BY: JP DATE 08/01
CHECKED BY: EDC 09/01
REVISED BY
DATE REVISED

LAST REVISION 00-00-00
DATE PLOTTED => 4/4/2008
TIME PLOTTED => 4:53:33 PM

DIST	COUNTY	ROUTE	KILOMETER POST TOTAL PROJECT	SHEET No	TOTAL SHEETS
04	SF	80	13.2/13.9	248R1	1204

REGISTERED ELECTRICAL ENGINEER 12/19/02 DATE

12-6-04
PLANS APPROVAL DATE

REGISTERED PROFESSIONAL ENGINEER JENS ERLINGSSON No. 8249 Exp. 9/30/06 ELECTRICAL STATE OF CALIFORNIA

PB POWER, Inc.
A Parsons Brinckerhoff Company
303 Second St., Suite 700N
San Francisco, CA 94107-1317

The State of California or its officers or agents shall not be responsible for the accuracy or completeness of electronic copies of this plan sheet.

Caltrans now has a web site! To get to the web site, go to http://www.dot.ca.gov

Caltrans Metric

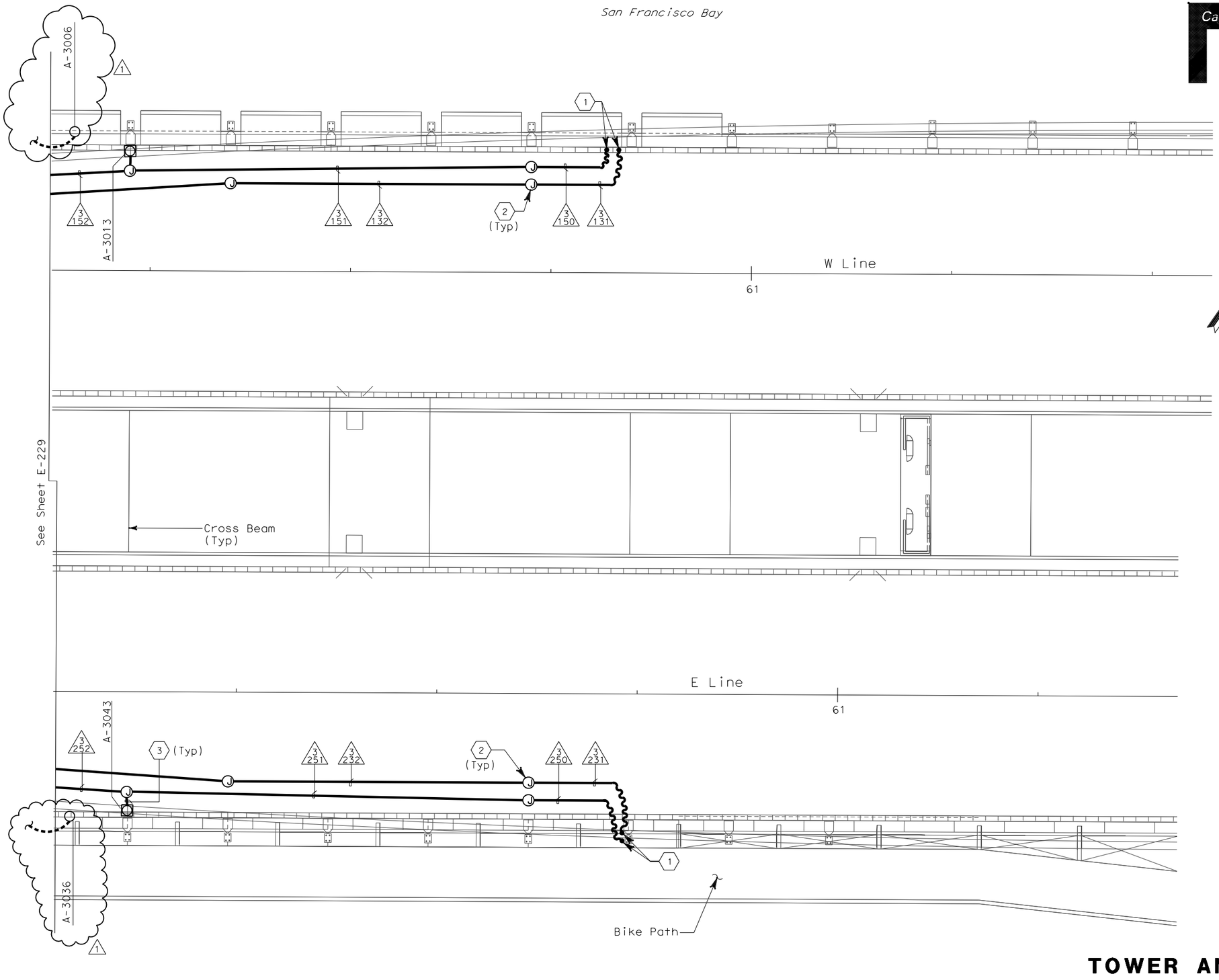

SHEET NOTES:

1. Flexible conduits attached to suspender cables. See SAS Superstructure Roadway Plans: E-50 (Westbound) E-139 (Eastbound)
2. Type PB-1B junction box is mounted on main suspension cable.
3. Supplied with lighting fixture assembly.

NOTES:

1. For tower and suspension cable lighting schedule see sheets E-271 to E-272.
2. For pull box schedule see sheets E-83 & E-169.
3. For 480 V main suspension cable lighting wiring diagrams, see sheets E-236 through E-240 and E-243 through E-247.
4. For circuit and conduit/cable tray schedules, see sheets starting at E-401.
5. For other related work not shown on this sheet, see Electrical Special Provisions.

REGISTERED PROFESSIONAL ENGINEER MARNELL FUMIO TAKAKI No. E 8651 Exp. 9/30/2008 ELECTRICAL STATE OF CALIFORNIA

FOR REVISION ONLY

REQUEST FOR INFORMATION NOT ADDRESSED IN THIS CCO REMAIN IN FORCE

MARK	DATE	DESCRIPTIONS	BY	CH'D	CCO#
1	02/19/08	ELECTRICAL MODIFICATIONS	MP EL	RR	42

REVISIONS

CONTRACT CHANGE ORDER NO._____
SHEET _____ OF _____

TOWER AND SUSPENSION CABLE
LIGHTING AND ELECTRICAL SYSTEMS

SCALE 1:200

SAS SUPERSTRUCTURE

E-230

THIS PLAN IS ACCURATE FOR ELECTRICAL WORK ONLY.

ALL DIMENSIONS ARE IN MILLIMETERS UNLESS OTHERWISE SHOWN

REVISED BY	DATE REVISED

CALCULATED/DESIGNED BY	JP	DATE 08/01
CHECKED BY	EDC	09/01

DESIGN OVERSIGHT
BEHZAD GOLEMOHAMMADI

STATE OF CALIFORNIA - DEPARTMENT OF TRANSPORTATION
Caltrans

LAST REVISION 00-00-00
DATE PLOTTED => 4/4/2008
TIME PLOTTED => 4:53:57 PM

FOR REDUCED PLANS ORIGINAL SCALE IS IN MILLIMETERS 0 20 40 60 80

DGN FILE =>T:\13103\MS\pse\SAS Struc\CCO\SAS CCO42\04-0120f1_0248R01.dgn
USERNAME =>llorico

CU 04251 EA 0120F1

DIST	COUNTY	ROUTE	KILOMETER POST TOTAL PROJECT	SHEET No	TOTAL SHEETS
04	SF	80	13.2/13.9	249 R1	1204

Caltrans Metric

REGISTERED ELECTRICAL ENGINEER 12/19/02 DATE

12-6-04
PLANS APPROVAL DATE

REGISTERED PROFESSIONAL ENGINEER JENS ERLINGSSON No. 8249 Exp. 9/30/06 ELECTRICAL STATE OF CALIFORNIA

PB POWER, Inc.
A Parsons Brinckerhoff Company
303 Second St., Suite 700N
San Francisco, CA 94107-1317

The State of California or its officers or agents shall not be responsible for the accuracy or completeness of electronic copies of this plan sheet.

Caltrans now has a web site! To get to the web site, go to http://www.dot.ca.gov

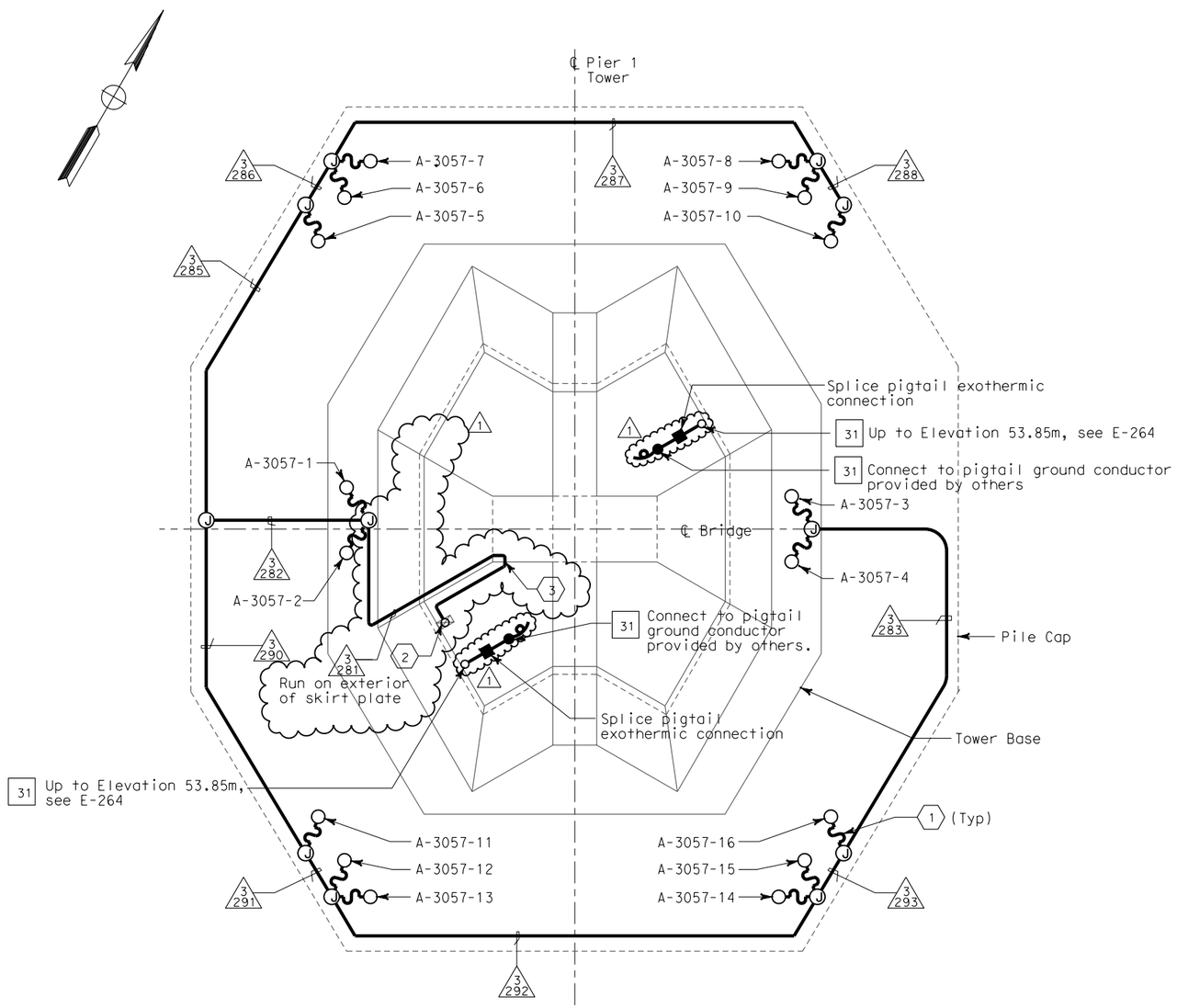

PLAN AT ELEV. 3.0

SCALE 1:125

NOTES:

1. References:
   - For 480 V Pier 1 tower lighting wiring diagram, see sheet E-250.
2. For circuit and conduit/cable tray schedules, see sheets starting at E-401.
3. For location plan of marker lights type MAP, see sheet E-227.
4. For other related work not shown on this sheet, see Electrical Special Provisions.

SHEET NOTES:

1. Supplied with lighting fixture assembly.
2. Up to cable tray 3/T24A in SW shaft at 13.5 m elevation.
3. Penetrate skin Plate A of SW shaft at 13.5 m elevation.

PIER 1 TOWER - LIGHTING SCHEDULE

Fixture Number	Location	Light Fixture Type	Number/ Wattage	Remarks
A-3057-1	Inside Pylon	MAU-2A	1-400 W	With Remote Ballast
A-3057-2	Inside Pylon	MAU-2A	1-400 W	With Remote Ballast
A-3057-3	Inside Pylon	MAU-2A	1-400 W	With Remote Ballast
A-3057-4	Inside Pylon	MAU-2A	1-400 W	With Remote Ballast
A-3057-5	Base (North)	MAR-2A-PB	1-400 W	
A-3057-6	Base (North)	MAR-2-PB	1-400 W	
A-3057-7	Base (North)	MAR-2A-PB	1-400 W	
A-3057-8	Base (North)	MAR-2A-PB	1-400 W	
A-3057-9	Base (North)	MAR-2-PB	1-400 W	
A-3057-10	Base (North)	MAR-2A-PB	1-400 W	
A-3057-11	Base (South)	MAR-2A-PB	1-400 W	
A-3057-12	Base (South)	MAR-2-PB	1-400 W	
A-3057-13	Base (South)	MAR-2A-PB	1-400 W	
A-3057-14	Base (South)	MAR-2A-PB	1-400 W	
A-3057-15	Base (South)	MAR-2-PB	1-400 W	
A-3057-16	Base (South)	MAR-2A-PB	1-400 W	
A-3008	Top of Pylon	MAP	2-250 W max. at 120 V, w/ lamp changer	

REGISTERED PROFESSIONAL ENGINEER S. A. ESTOQUE, JR. No. E-10151 Exp. 12/31/2008 ELECTRICAL STATE OF CALIFORNIA

FOR REVISION ONLY

REQUEST FOR INFORMATION NOT ADDRESSED IN THIS CCO REMAIN IN FORCE

MARK	DATE	DESCRIPTIONS	BY	CH'D	CCO#
1	02/19/08	ELECTRICAL MODIFICATIONS	MP EL	RR	42

REVISIONS

CONTRACT CHANGE ORDER NO._____
SHEET _____ OF _____

TOWER AND SUSPENSION CABLE
LIGHTING AND ELECTRICAL SYSTEMS

SCALE AS NOTED

E-231

THIS PLAN IS ACCURATE FOR ELECTRICAL WORK ONLY.

ALL DIMENSIONS ARE IN MILLIMETERS UNLESS OTHERWISE SHOWN.

DATE	BY	CALCULATED/ DESIGNED BY	CHECKED BY	REVISED BY	DATE REVISED
10/01	FK	EDC		AB	2/04
11/01					

DESIGN OVERSIGHT
BEHZAD GOLEMOHAMMADI

STATE OF CALIFORNIA - DEPARTMENT OF TRANSPORTATION
Caltrans

LAST REVISION 00-00-00
DATE PLOTTED => 5/9/2008
TIME PLOTTED => 2:23:00 PM

FOR REDUCED PLANS ORIGINAL SCALE IS IN MILLIMETERS 0 20 40 60 80

DGN FILE =>T:\13103\MS\pse\SAS Struc\CCO\SAS CCO42\04-0120f1_0249R01.dgn
USERNAME =>llorico

CU 04251

EA 0120F1

DIST	COUNTY	ROUTE	KILOMETER POST TOTAL PROJECT	SHEET No	TOTAL SHEETS
04	SF	80	13.2/13.9	252R1	1204

REGISTERED ELECTRICAL ENGINEER 12/19/02 DATE

12-6-04
PLANS APPROVAL DATE

PB POWER, Inc.
A Parsons Brinckerhoff Company
303 Second St., Suite 700N
San Francisco, CA 94107-1317

REGISTERED PROFESSIONAL ENGINEER JENS ERLINGSSON No. 8249 Exp. 9/30/06 ELECTRICAL STATE OF CALIFORNIA

The State of California or its officers or agents shall not be responsible for the accuracy or completeness of electronic copies of this plan sheet.

Caltrans now has a web site! To get to the web site, go to http://www.dot.ca.gov

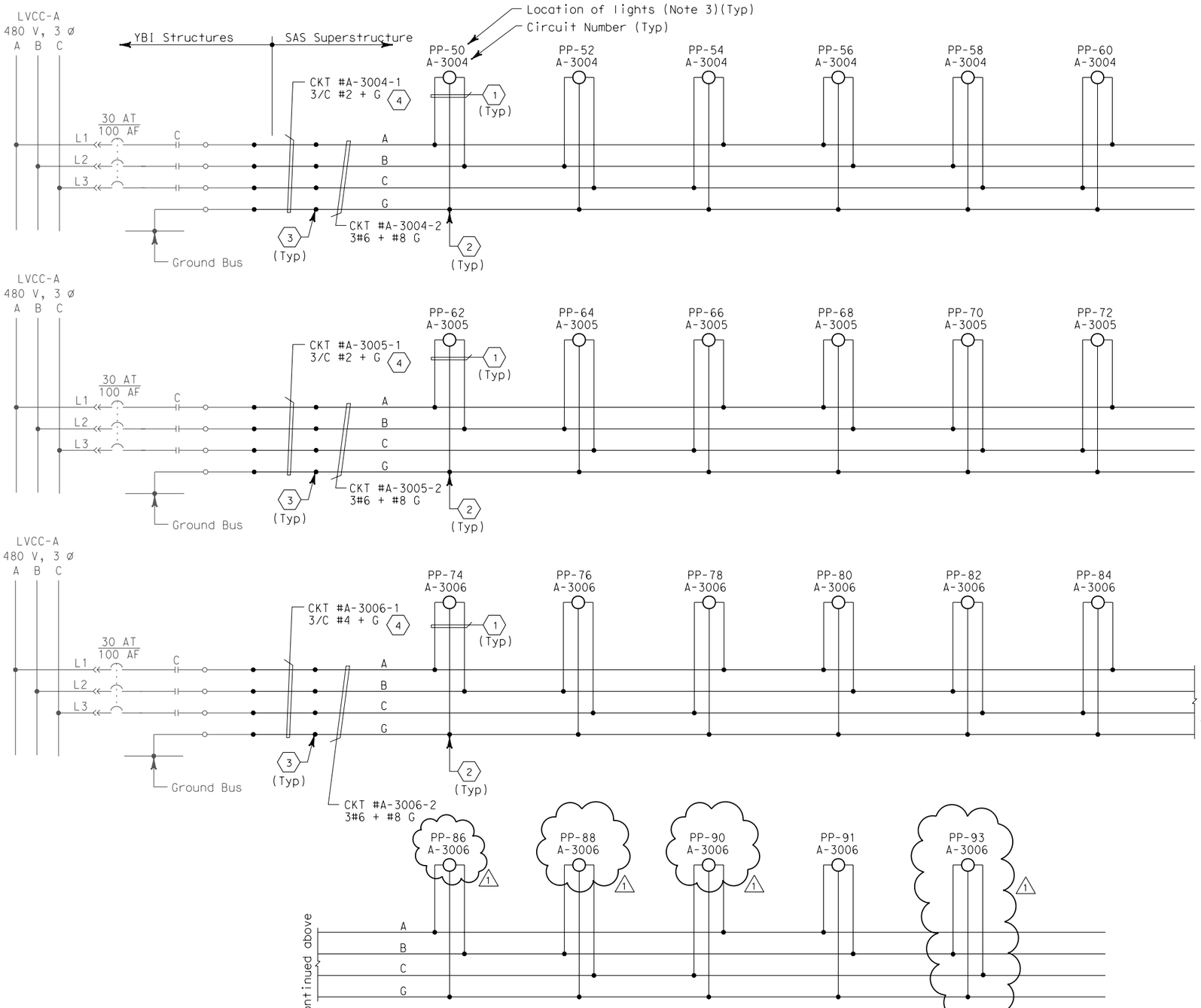

SHEET NOTES:

1. 2/C #10 + G, type SO cord.
2. Conductors spliced inside pull box PB-LTG.
3. Conductors spliced inside junction box PB-2A located inside girder.
4. The Contractor shall extend and coil 5 meters of cable in manhole 25. All cables shall be tagged with circuits numbers as shown.

NOTES:

1. Use multi-conductor cable if circuit is routed via trays.
2. References:
   - For typical pull box schedule, see sheets E-83 and E-169.
   - For circuit and conduit/cable tray schedules, see sheets starting at E-401.
3. For number of lighting fixtures see Lighting Fixture Schedule sheets E-271 and E-272.

REGISTERED PROFESSIONAL ENGINEER MAXWELL FUMIO TAKAKI No. E 8651 Exp. 9/30/2008 ELECTRICAL STATE OF CALIFORNIA

FOR REVISION ONLY

REQUEST FOR INFORMATION NOT ADDRESSED IN THIS CCO REMAIN IN FORCE

MARK	DATE	DESCRIPTIONS	BY	CH'D	CCO#
1	02/19/08	ELECTRICAL MODIFICATIONS	MP EL	RR	42

REVISIONS

CONTRACT CHANGE ORDER NO._____
SHEET _____ OF _____

DETAILS
TOWER AND SUSPENSION CABLE
480 V MAIN SUSPENSION CABLE LIGHTING WIRING DIAGRAM

NO SCALE

480 V SUSPENDER UPLIGHT LIGHTING

E-238

STATE OF CALIFORNIA - DEPARTMENT OF TRANSPORTATION
Caltrans

DESIGN OVERSIGHT: BEHZAD GOLEMOHAMMADI
CALCULATED/DESIGNED BY: JP | DATE: 8/01 | REVISED BY
CHECKED BY: EDC | 11/01 | DATE REVISED

LAST REVISION 00-00-00
DATE PLOTTED => 4/4/2008
TIME PLOTTED => 4:54:40 PM

FOR REDUCED PLANS ORIGINAL SCALE IS IN MILLIMETERS 0 20 40 60 80

DGN FILE =>T:\13103\MS\pse\SAS Struc\CCO\SAS CCO42\04-0120f1_0252R01.dgn
USERNAME =>llorico

CU 04251 | EA 0120F1

DIST	COUNTY	ROUTE	KILOMETER POST TOTAL PROJECT	SHEET No	TOTAL SHEETS
04	SF	80	13.2/13.9	257R1	1204

Jens Erlingsson 12/19/02
REGISTERED ELECTRICAL ENGINEER DATE

12-6-04
PLANS APPROVAL DATE

REGISTERED PROFESSIONAL ENGINEER JENS ERLINGSSON No. 8249 Exp. 9/30/06 ELECTRICAL STATE OF CALIFORNIA

PB POWER, Inc.
A Parsons Brinckerhoff Company
303 Second St., Suite 700N
San Francisco, CA 94107-1317

The State of California or its officers or agents shall not be responsible for the accuracy or completeness of electronic copies of this plan sheet.

Caltrans now has a web site! To get to the web site, go to http://www.dot.ca.gov

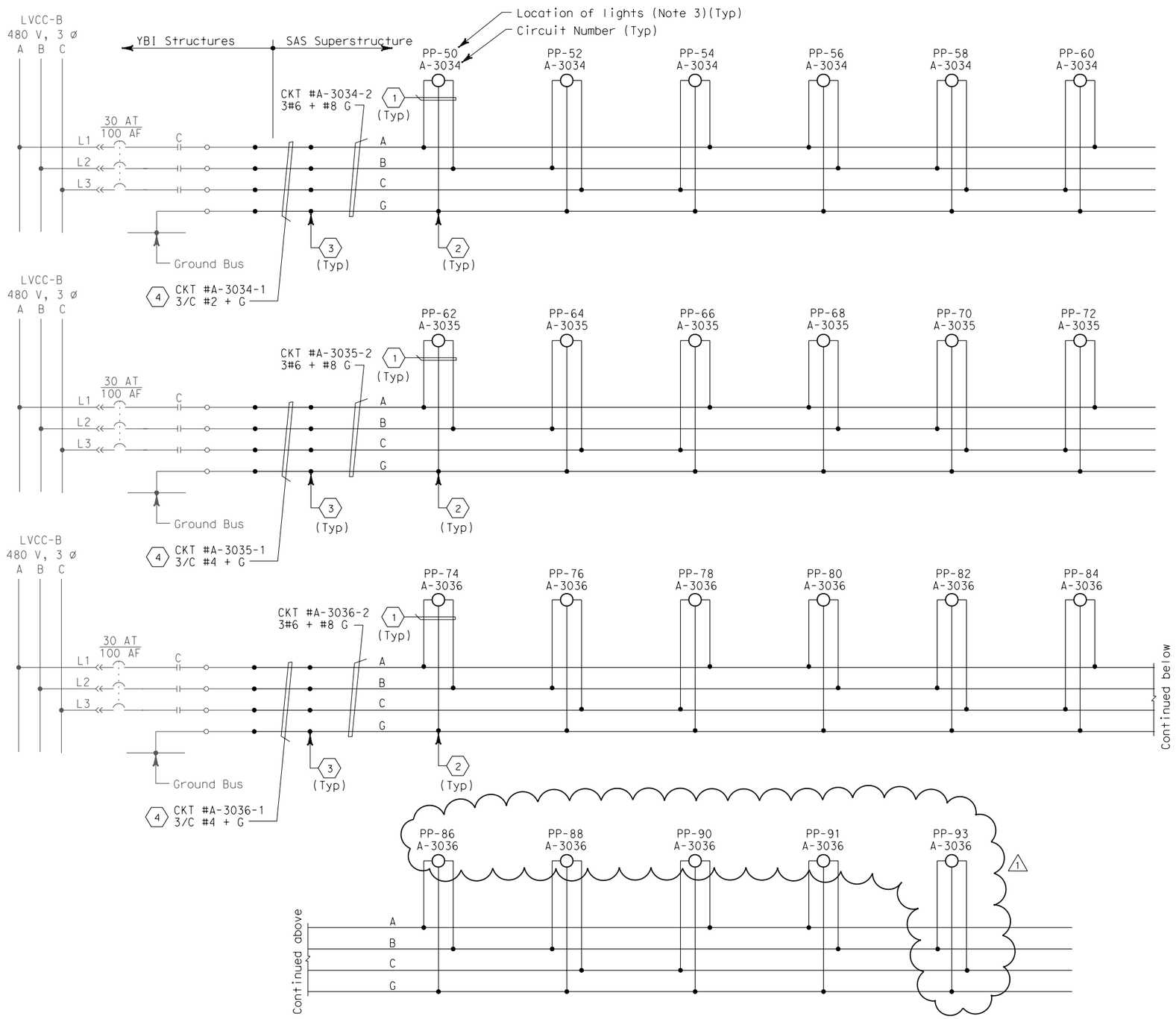

SHEET NOTES:

1. 2/C #10 + G, type SO cord.
2. Conductors spliced inside pull box PB-LTG.
3. Conductors spliced inside junction box PB-2A located inside girder.
4. The Contractor shall extend and coil 5 meters of cable in manhole 25. All cables shall be tagged with circuits numbers as shown.

NOTES:

1. Use multi-conductor cable if circuit is routed via trays.
2. References:
   - For typical pull box schedule, see sheets E-83 and E-169.
   - For circuit and conduit/cable tray schedules, see sheets starting at E-401.
3. For number of lighting fixtures see Lighting Fixture Schedule sheets E-271 and 272.

REGISTERED PROFESSIONAL ENGINEER MARRELL FUMIO TAKAKI No. E 8651 Exp. 9/30/2008 ELECTRICAL STATE OF CALIFORNIA

FOR REVISION ONLY

REQUEST FOR INFORMATION NOT ADDRESSED IN THIS CCO REMAIN IN FORCE

MARK	DATE	DESCRIPTIONS	BY	CH'D	CCO#
1	02/19/08	ELECTRICAL MODIFICATIONS	MP EL	RR	42

REVISIONS

CONTRACT CHANGE ORDER NO._____
SHEET _____ OF _____

DETAILS
TOWER AND SUSPENSION CABLE
480 V MAIN SUSPENSION CABLE LIGHTING WIRING DIAGRAM

NO SCALE

480 V SUSPENDER UPLIGHT LIGHTING

E-245

REVISED BY	DATE REVISED

CALCULATED/DESIGNED BY	DATE 09/01
JP	
CHECKED BY	EDC

DESIGN OVERSIGHT
BEHZAD GOLEMOHAMMADI

STATE OF CALIFORNIA - DEPARTMENT OF TRANSPORTATION
Caltrans

LAST REVISION 00-00-00 | DATE PLOTTED => 4/4/2008 TIME PLOTTED => 4:55:01 PM

FOR REDUCED PLANS ORIGINAL SCALE IS IN MILLIMETERS 0 20 40 60 80

DGN FILE =>T:\13103\MS\pse\SAS Struc\CCO\SAS CCO42\04-0120f1_0257R01.dgn
USERNAME =>llorico

CU 04251 | EA 0120F1

DIST	COUNTY	ROUTE	KILOMETER POST TOTAL PROJECT	SHEET No	TOTAL SHEETS
04	SF	80	13.2/13.9	270R1	1204

Caltrans Metric

REGISTERED PROFESSIONAL ENGINEER MAXWELL FUMIO TAKAKI No. E 8651 Exp. 9/30/2008 ELECTRICAL STATE OF CALIFORNIA

FOR REVISION ONLY

Jens Erlingsson 12/19/02
REGISTERED ELECTRICAL ENGINEER DATE

12-6-04
PLANS APPROVAL DATE

REGISTERED PROFESSIONAL ENGINEER JENS ERLINGSSON No. 8249 Exp. 9/30/06 ELECTRICAL STATE OF CALIFORNIA

PB POWER, Inc.
A Parsons Brinckerhoff Company
303 Second St., Suite 700N
San Francisco, CA 94107-1317

The State of California or its officers or agents shall not be responsible for the accuracy or completeness of electronic copies of this plan sheet.

Caltrans now has a web site! To get to the web site, go to http://www.dot.ca.gov

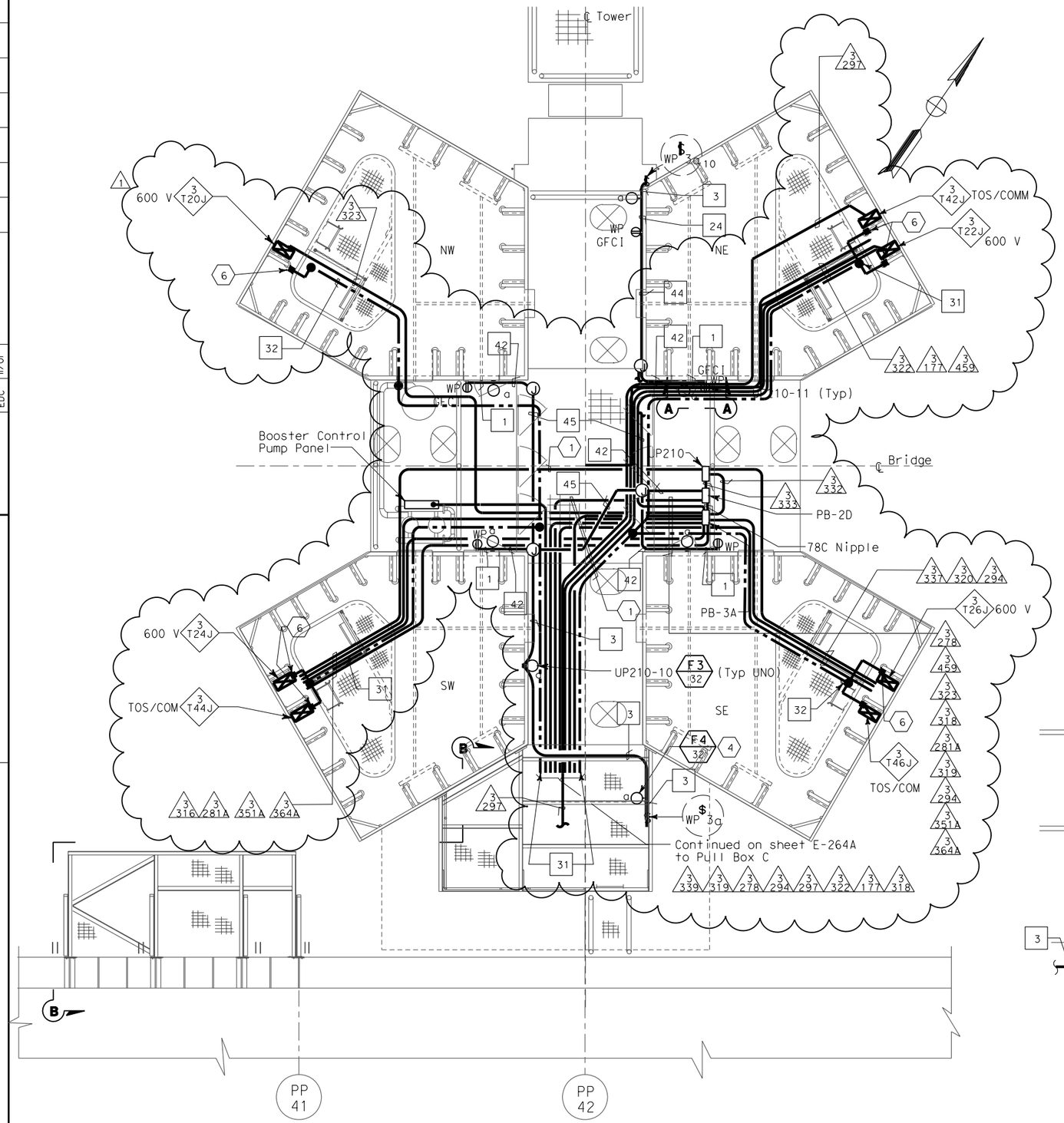

WALKWAY AND ACCESS PLATFORM TO "E" LINE GIRDER AT ELEV 53.85 m

SCALE 1:40

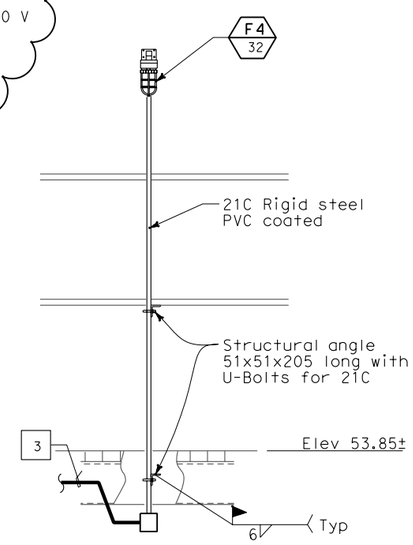

DETAIL 1

NO SCALE

SHEET NOTES:

1. All conduits which thereafter cross the access walkways shall be raised to a level of at least 2438 above the grating to pass overhead, allowing free walkways on the remaining three quadrants of the platform. Door on north face of SE tower shaft shall remain accesible.
2. Down to elev. 3.0 m, see sheet E-231.
3. For continuation, see sheet E-266.
4. See Detail 1, this drawing.
5. 250 kcmil Copper conductor down to Elevation 3.0 Sheet E-231.
6. #4/0 Bare copper conductor bonded to all cable trays (Typ.)

NOTES:

1. References:
   - For typical conduit installation details, see sheet E-268.
   - For utility panel UP-210 schedule, see sheet E-278.
   - For types of pull boxes, splice boxes and enclosures, see sheets E-83 and E-169.
   - For conduit and cable tray schedules, see sheets starting at E-401.
   - For lighting fixture schedule, see sheet E-273.
   - For vertical conduit runs support system, see sheet E-287.
   - For Section A-A, see sheet E-285.
   - For lighting installation details, see sheet E-267.
2. Electrical conduits shall enter the tower shafts between stiffeners A3 and A4 only for conduits going up or down inside the tower shafts between C1 and C2 only. For conduit entry details, see Structural Utility drawings.
3. All conduits and fittings routed exposed at grating shall be rigid galvanized steel, PVC coated.
4. Fixture mounting height elevation shall be 2.125 m above floor/platform elevation UNO.
5. For other related work not shown on this sheet, see Electrical Special Provisions.
6. For Section B-B, see sheet EE-264A.
7. Typical conduit installation. See Detail 8, sheet E-268.

REQUEST FOR INFORMATION NOT ADDRESSED IN THIS CCO REMAIN IN FORCE

MARK	DATE	DESCRIPTIONS	BY	CH'D	CCO#
1	02/19/08	ELECTRICAL MODIFICATIONS	MP EL	RR	42

REVISIONS

CONTRACT CHANGE ORDER NO. _____
SHEET _____ OF _____

DETAILS
TOWER AND SUSPENSION CABLE TOWER POWER AND LIGHTING

SCALE AS NOTED

E-264

STATE OF CALIFORNIA - DEPARTMENT OF TRANSPORTATION
Caltrans

DESIGN OVERSIGHT: BEHZAD GOLEMOHAMMADI
CALCULATED/DESIGNED BY: FK | DATE: 10/01 | REVISED BY
CHECKED BY: EDC | 11/01 | DATE REVISED

THIS PLAN ACCURATE FOR ELECTRICAL WORK ONLY.

ALL DIMENSIONS ARE IN MILLIMETERS UNLESS OTHERWISE SHOWN.

FOR REDUCED PLANS ORIGINAL SCALE IS IN MILLIMETERS 0 20 40 60 80

DGN FILE =>T:\13103\MS\pse\SAS Struc\CCO\SAS CC042\04-0120f1_0270R01.dgn
USERNAME =>llorico

CU 04251 | EA 0120F1

LAST REVISION 00-00-00 | DATE PLOTTED => 4/4/2008 TIME PLOTTED => 4:55:26 PM

DIST	COUNTY	ROUTE	KILOMETER POST TOTAL PROJECT	SHEET No	TOTAL SHEETS
04	SF	80	13.2/13.9	271R1	1204

REGISTERED ELECTRICAL ENGINEER 12/19/02 DATE

12-6-04
PLANS APPROVAL DATE

REGISTERED PROFESSIONAL ENGINEER JENS ERLINGSSON NO. 8249 EXP. 9/30/06 ELECTRICAL STATE OF CALIFORNIA

PB POWER, Inc.
A Parsons Brinckerhoff Company
303 Second St., Suite 700N
San Francisco, CA 94107-1317

The State of California or its officers or agents shall not be responsible for the accuracy or completeness of electronic copies of this plan sheet.

Caltrans now has a web site! To get to the web site, go to http://www.dot.ca.gov

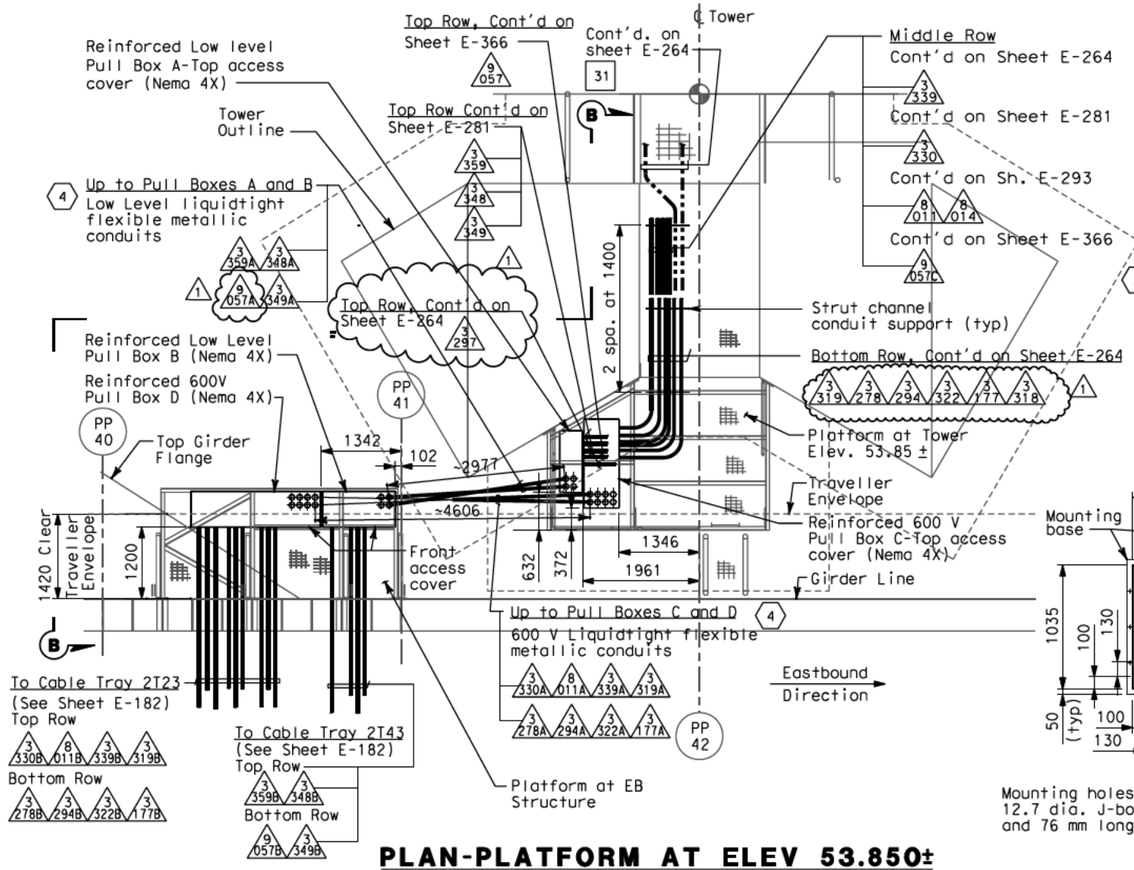

PLAN-PLATFORM AT ELEV 53.850±

SCALE 1:50

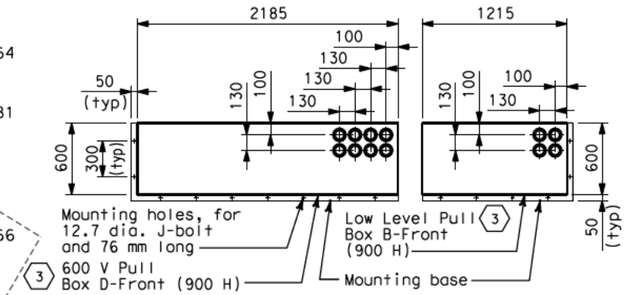

DETAIL 1

BOTTOM PLAN OF PULL BOXES LOCATED AT EB STRUCTURE PLATFORM
SCALE 1:25

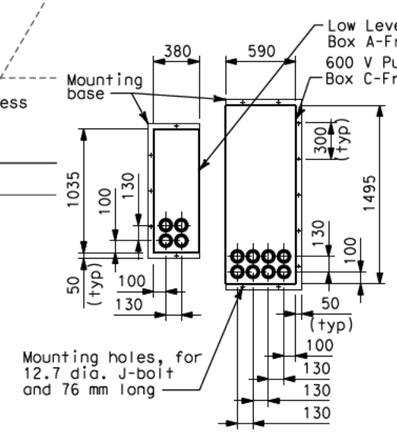

DETAIL 2

BOTTOM PLAN OF PULL BOXES LOCATED AT TOWER PLATFORM
SCALE 1:25

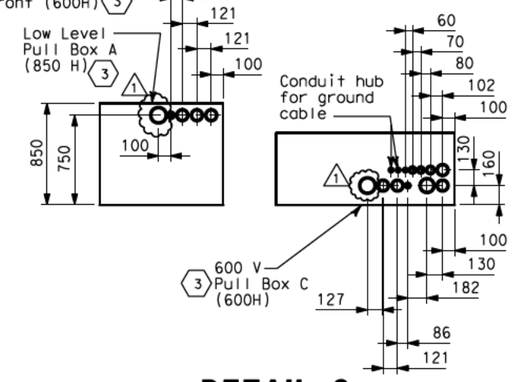

DETAIL 3

FRONT ELEVATION OF PULL BOXES LOCATED AT TOWER PLATFORM
SCALE 1:25

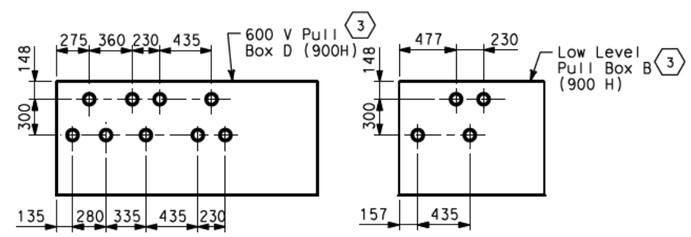

DETAIL 4

FRONT ELEVATION OF PULL BOXES LOCATED AT EB STRUCTURE PLATFORM
SCALE 1:25

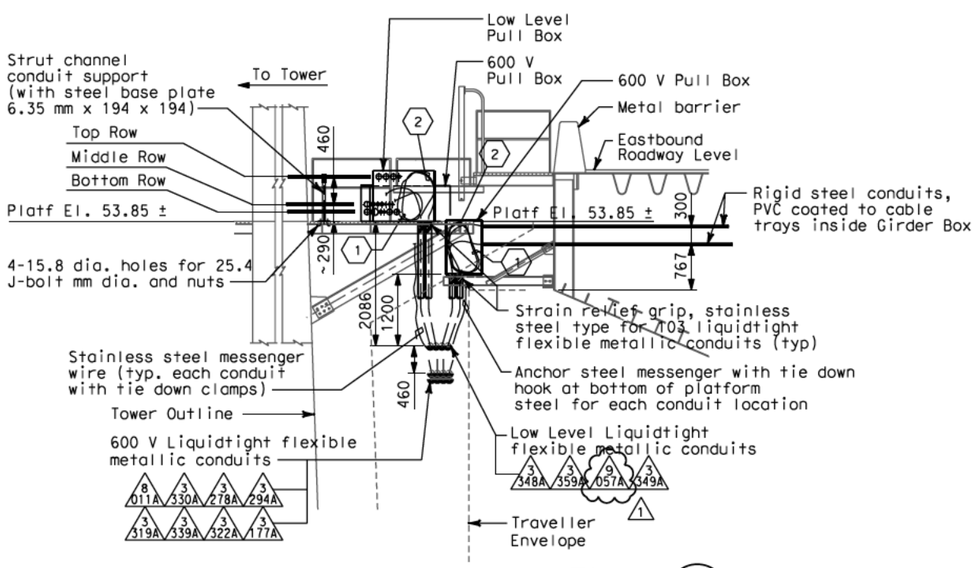

SECTION B

SCALE 1:50

SHEET NOTES

1. Coil 3 meters long of cable for each circuits inside the pull boxes.
2. Provide hooked cable support grips for cable or groups of cables at each liquidtight flexible metallic conduit inside the pull box.
3. Pull Box shall be fabricated of Nema 4X stainless steel, type 304. Pull Box shall be of reinforced construction to provide vertical support at bottom side of box for weighted conduit and cables inside. The top side of the Pull Box shall be reinforced and provided with hooks for cable support grips inside the pull box.
4. Electrical conduit design between Eastbound Structure and Main Tower is based on the maximum expansion of 1000 mm all directions.

NOTES

1. For location of sleeves Eastbound Structure PP-40 and PP-41, see Structural Plans.
2. Each liquidtight flexible metallic conduit shall be provided with #6 green insulated ground conductor outside the conduit.

REGISTERED PROFESSIONAL ENGINEER MASHELL FUMIO TAKAKI NO. E 8651 EXP. 9/30/2008 ELECTRICAL STATE OF CALIFORNIA

FOR REVISION ONLY

REQUEST FOR INFORMATION NOT ADDRESSED IN THIS CCO REMAIN IN FORCE					
MARK	DATE	DESCRIPTIONS	BY	CH'D	CCO#
1	02/19/08	ELECTRICAL MODIFICATIONS	MP EL	RR	42
REVISIONS					

CONTRACT CHANGE ORDER NO._____
SHEET _____ OF _____

DETAILS
TOWER AND SUSPENSION CABLE

SCALE: AS NOTED

E-264A

THIS PLAN ACCURATE FOR ELECTRICAL WORK ONLY.

ALL DIMENSIONS ARE IN MILLIMETERS UNLESS OTHERWISE SHOWN.

DATE	BY	CALCULATED/ DESIGNED BY	CHECKED BY
3/04	EJL	JE	

DESIGN OVERSIGHT: BEHZAD GOLEMOHAMMADI

STATE OF CALIFORNIA - DEPARTMENT OF TRANSPORTATION

Caltrans

FOR REDUCED PLANS ORIGINAL SCALE IS IN MILLIMETERS 0 20 40 60 80

DGN FILE =>T:\13103\MS\pse\SAS Struc\CCO\SAS CC042\04-0120f1_0271R01.dgn
USERNAME =>llorico

CU 04251

EA 0120F1

LAST REVISION 00-00-00

DATE PLOTTED => 4/4/2008
TIME PLOTTED => 4:55:48 PM

DIST	COUNTY	ROUTE	KILOMETER POST TOTAL PROJECT	SHEET No	TOTAL SHEETS
04	SF	80	13.2/13.9	272R1	1204

Caltrans Metric

REGISTERED ELECTRICAL ENGINEER 12/19/02 DATE

12-6-04
PLANS APPROVAL DATE

REGISTERED PROFESSIONAL ENGINEER JENS ERLINGSSON No. 8249 Exp. 9/30/06 ELECTRICAL STATE OF CALIFORNIA

PB POWER, Inc.
A Parsons Brinckerhoff Company
303 Second St., Suite 700N
San Francisco, CA 94107-1317

The State of California or its officers or agents shall not be responsible for the accuracy or completeness of electronic copies of this plan sheet.

Caltrans now has a web site! To get to the web site, go to http://www.dot.ca.gov

REGISTERED PROFESSIONAL ENGINEER MANNELL FUMIO TAKAKI No. E 8651 Exp. 9/30/2008 ELECTRICAL STATE OF CALIFORNIA

FOR REVISION ONLY

REQUEST FOR INFORMATION NOT ADDRESSED IN THIS CCO REMAIN IN FORCE

MARK	DATE	DESCRIPTIONS	BY	CH'D	CCO#
1	02/19/08	ELECTRICAL MODIFICATIONS	MP EL	RR	42

REVISIONS

CONTRACT CHANGE ORDER NO._____
SHEET _____ OF _____

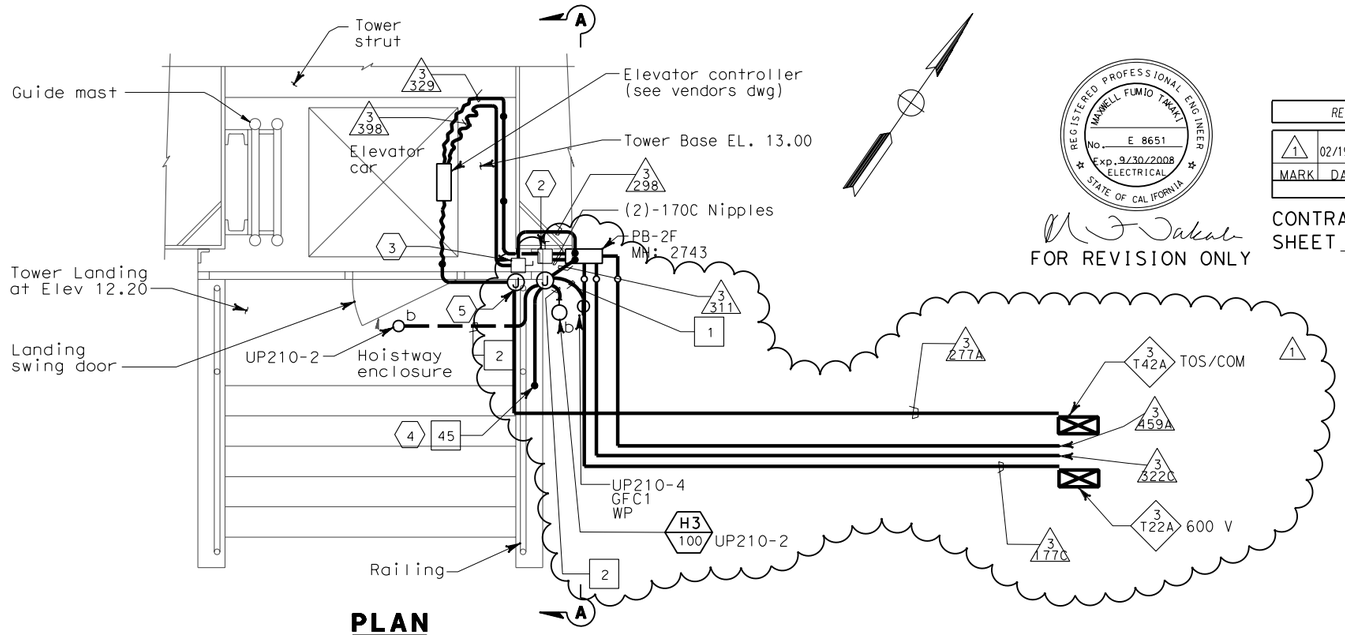

PLAN
TOWER BASE ELEVATOR ENCLOSURE
SCALE 1:20

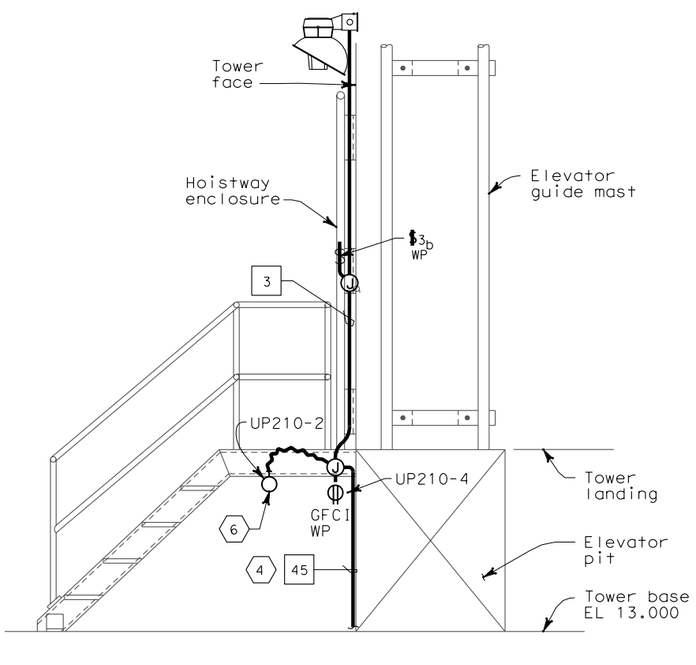

SECTION A-A
SCALE 1:20

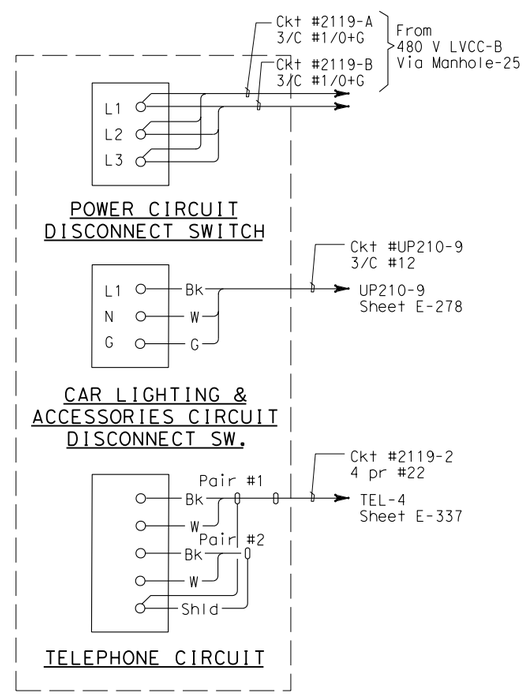

MAIN TOWER ELEVATOR PIT CONNECTION DIAGRAM

SHEET NOTES:

1. Deleted.
2. 480 V, 3 ø, 100 A, non-fused disconnect switch for elevator pit motor. Use liquid tight flexible conduit from disconnect switch to the motor.
3. 120 V single pole single throw disconnect switch for elevator lighting and fan.
4. Down to elevation 9.0 m. See sheet E-266.
5. PB-TOS for telephone communication lines.
6. Elevator pit light fixture shall be located a maximum of 450 mm from access ladder and 915 mm above lowest landing.
7. For lighting and receptacles in this area, see sheet E-266.

NOTES:

1. References:
   - For utility panel UP-210 schedule, see sheet E-278.
   - For types of pull boxes, splice boxes and enclosures, see sheets E-83 and E-169.
   - For conduit and cable tray schedules, see sheets starting at E-401.
   - For lighting fixture schedule, see sheet E-273.
   - For vertical conduit runs support system, see sheet E-287.
   - For typical lighting installation details, see sheet E-267.
   - For typical conduit installation details, see sheet E-268.
2. Electrical conduits shall enter the tower shafts between stiffeners A3 and A4 only. For conduit entry details, see Structural Utility drawings
3. Fixture mounting height elevation shall be 2.4 m above floor/platform elevation UNO.
4. All conduits and fittings routed exposed at grating shall be rigid galvanized steel, PVC coated.
5. For other related work not shown on this sheet, see Electrical Special Provisions.

DETAILS
TOWER AND SUSPENSION CABLE
TOWER POWER AND LIGHTING
SCALE AS NOTED

E-265

THIS PLAN ACCURATE FOR ELECTRICAL WORK ONLY.

ALL DIMENSIONS ARE IN MILLIMETERS UNLESS OTHERWISE SHOWN.

FOR REDUCED PLANS ORIGINAL SCALE IS IN MILLIMETERS 0 20 40 60 80

DGN FILE =>T:\13103\MS\pse\SAS Struc\CCO\SAS CCO42\04-0120f1_0272R01.dgn
USERNAME =>llorico

CU 04251 EA 0120F1

LAST REVISION 00-00-00 DATE PLOTTED => 4/4/2008 TIME PLOTTED => 4:56:08 PM

STATE OF CALIFORNIA - DEPARTMENT OF TRANSPORTATION
Caltrans

DESIGN OVERSIGHT BEHZAD GOLEMOHAMMADI

CALCULATED/DESIGNED BY FK DATE 10/01 REVISED BY
CHECKED BY EDC 11/01 DATE REVISED

DIST	COUNTY	ROUTE	KILOMETER POST TOTAL PROJECT	SHEET No	TOTAL SHEETS
04	SF	80	13.2/13.9	273R1	1204

Caltrans Metric

REGISTERED ELECTRICAL ENGINEER 12/19/02 DATE

12-6-04
PLANS APPROVAL DATE

PB POWER, Inc.
A Parsons Brinckerhoff Company
303 Second St., Suite 700N
San Francisco, CA 94107-1317

REGISTERED PROFESSIONAL ENGINEER JENS ERLINGSSON No. 8249 Exp. 9/30/06 ELECTRICAL STATE OF CALIFORNIA

The State of California or its officers or agents shall not be responsible for the accuracy or completeness of electronic copies of this plan sheet.

Caltrans now has a web site! To get to the web site, go to http://www.dot.ca.gov

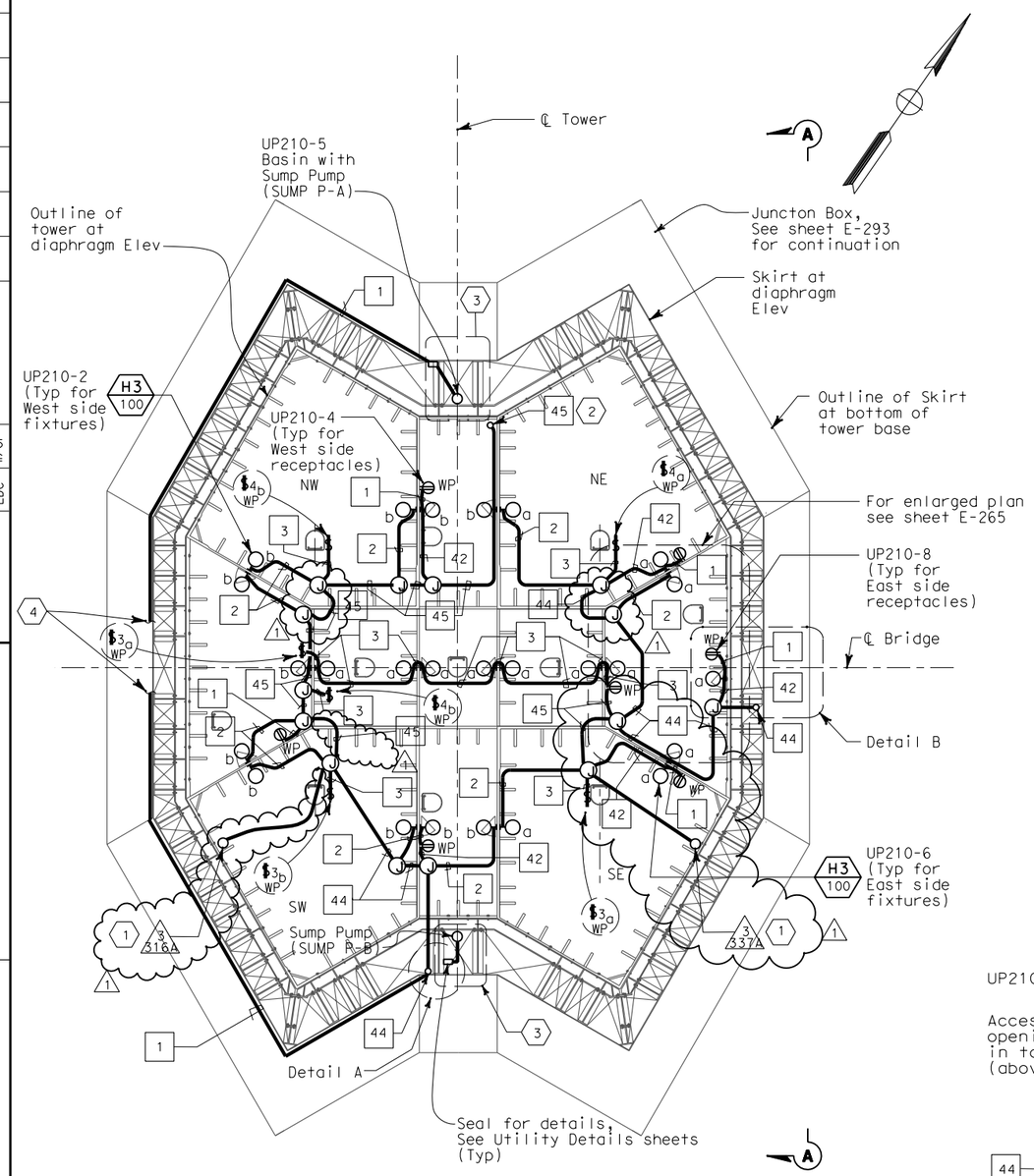

PLAN AT ELEV 9.0 m

SCALE 1:100

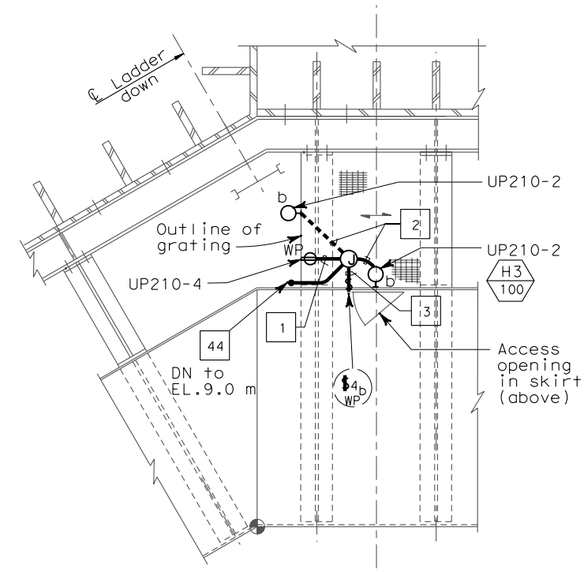

DETAIL A

SCALE 1:25

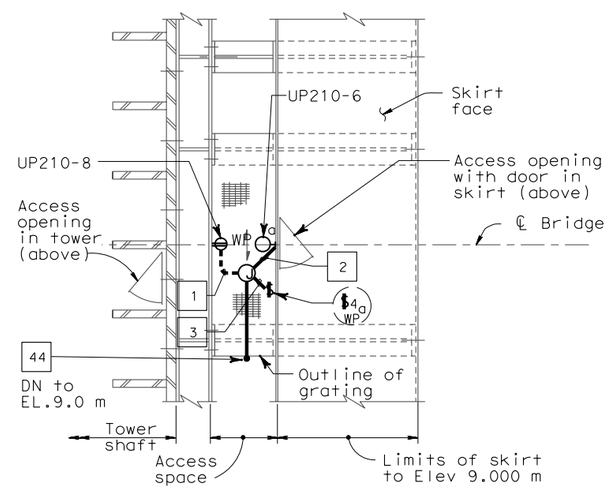

DETAIL B

1:25

SHEET NOTES:

1. Up to 600V cable tray at Elevation 13m.
2. For continuation, see sheet E-265.
3. For Sump Pump Basin installation, see Detail 6 on sheet E-267.
4. Contnue conduit to junction box on E-231.

NOTES:

1. References:
   - For vertical conduit runs support system, see sheet E-287.
   - For utility panel UP-210 schedule, see sheet E-278.
   - For types of pull boxes, splice boxes and enclosures, see sheets E-83 and E-169.
   - For conduit and cable tray schedule, see sheets starting at E-401.
   - For lighting installation details, see sheet E-267.
   - For lighting fixture schedule, see sheet E-273.
   - For typical conduit installation details, see sheet E-268.
2. All conduits and fittings routed exposed at grating shall be rigid galvanized steel, PVC coated.
3. Electrical conduits shall enter the tower shafts between stiffeners A3 and A4 only. For conduit entry details, see Structral Utility drawings.
4. Fixture mounting height elevation shall be 2.4 m above floor/platform elevation UNO.
5. For other related work not shown on this sheet, see Electrical Special Provisions.

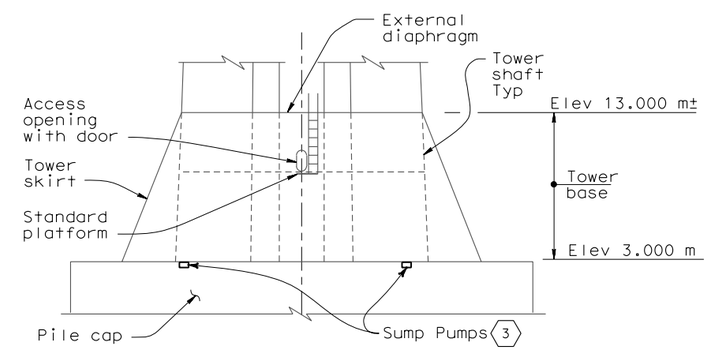

SECTION A-A

1:200

DETAILS
TOWER AND SUSPENSION CABLE
TOWER POWER AND LIGHTING

SCALE AS NOTED

REGISTERED PROFESSIONAL ENGINEER MAXWELL FUMIO TAKAKI No. E 8651 Exp. 9/30/2008 ELECTRICAL STATE OF CALIFORNIA

FOR REVISION ONLY

REQUEST FOR INFORMATION NOT ADDRESSED IN THIS CCO REMAIN IN FORCE

MARK	DATE	DESCRIPTIONS	BY	CH'D	CCO#
1	02/19/08	ELECTRICAL MODIFICATIONS	MP EL	RR	42

REVISIONS

CONTRACT CHANGE ORDER NO._____
SHEET _____ OF _____

THIS PLAN ACCURATE FOR ELECTRICAL WORK ONLY.

ALL DIMENSIONS ARE IN MILLIMETERS UNLESS OTHERWISE SHOWN.

E-266

STATE OF CALIFORNIA - DEPARTMENT OF TRANSPORTATION
Caltrans

DESIGN OVERSIGHT: BEHZAD GOLEMOHAMMADI

CALCULATED/DESIGNED BY: FK | DATE: 10/01 | REVISED BY: AB
CHECKED BY: EDC | DATE: 11/01 | DATE REVISED: 2/04

FOR REDUCED PLANS ORIGINAL SCALE IS IN MILLIMETERS 0 20 40 60 80

DGN FILE =>T:\13103\MS\pse\SAS Struc\CCO\SAS CC042\04-0120f1_0273R01.dgn
USERNAME =>llorico

CU 04251 | EA 0120F1

LAST REVISION 00-00-00 | DATE PLOTTED => 4/4/2008 TIME PLOTTED => 4:56:25 PM

DIST	COUNTY	ROUTE	KILOMETER POST TOTAL PROJECT	SHEET No	TOTAL SHEETS
04	SF	80	13.2/13.9	275S1	1204

REGISTERED ELECTRICAL ENGINEER 8/24/07 DATE

PLANS APPROVAL DATE

REGISTERED PROFESSIONAL ENGINEER MAXWELL FUMIO TAKAKI NO. E 8651 Exp. 9/30/2008 ELECTRICAL STATE OF CALIFORNIA

PB AMERICAS, Inc.
A Parsons Brinckerhoff Company
303 Second St., Suite 700N
San Francisco, CA 94107-1317

The State of California or its officers or agents shall not be responsible for the accuracy or completeness of electronic copies of this plan sheet.

Caltrans now has a web site! To get to the web site, go to http://www.dot.ca.gov

REQUEST FOR INFORMATION NOT ADDRESSED IN THIS CCO REMAIN IN FORCE

MARK	DATE	DESCRIPTIONS	BY	CH'D	CCO#
0	02/19/08	ELECTRICAL MODIFICATIONS	MP EL	RR	42

REVISIONS

CONTRACT CHANGE ORDER NO._____
SHEET _____ OF _____

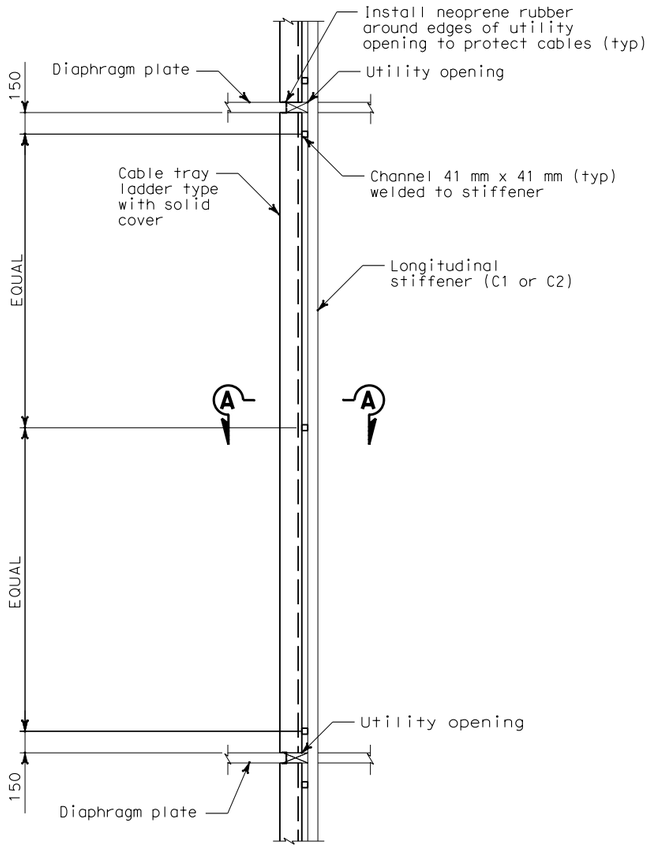

DETAIL 1
ELEVATION VIEW

TOWER CABLE TRAY
TYPICAL INSTALLATION
SCALE: 1:20

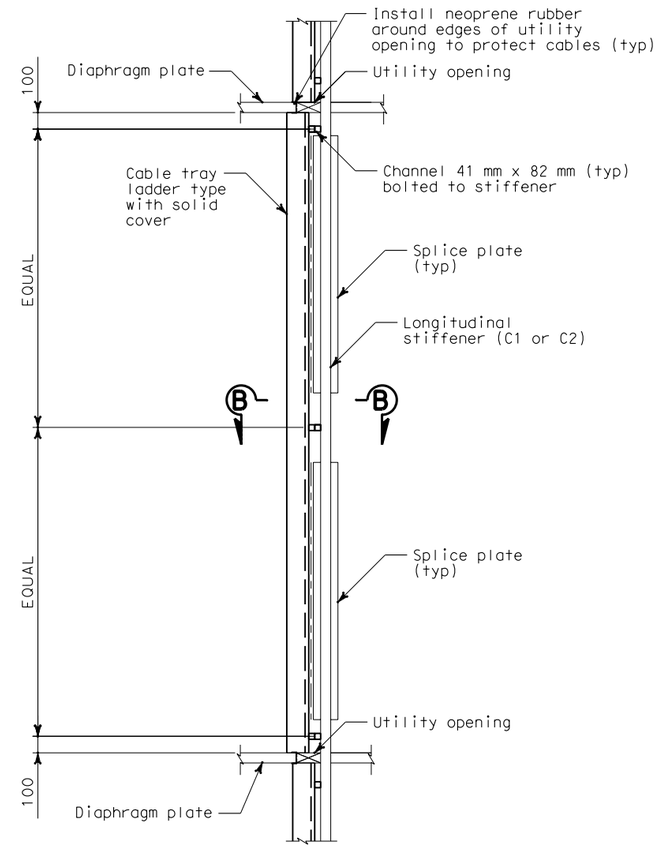

DETAIL 2
ELEVATION VIEW

TOWER CABLE TRAY
TYPICAL INSTALLATION
ALONG SPLICE PLATE
SCALE: 1:20

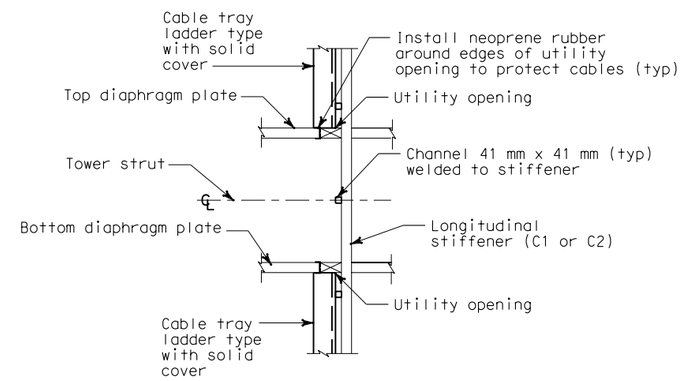

DETAIL 3
ELEVATION VIEW

TOWER CABLE TRAY
TYPICAL INSTALLATION
ALONG TOWER STRUT AREA
SCALE: 1:20

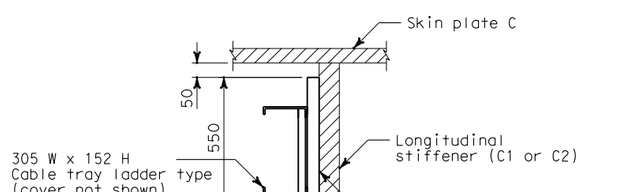

SECTION A-A

SCALE: 1:10

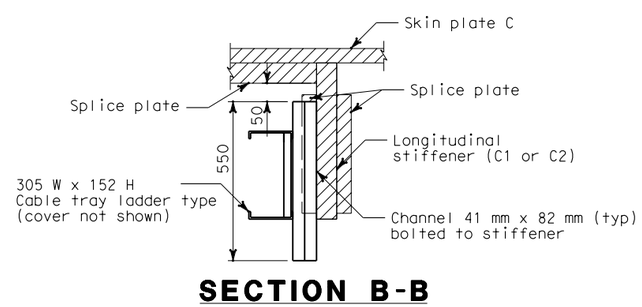

SECTION B-B

SCALE: 1:10

NOTES:

1. TOS/Communication cable trays shall be installed along C2 stiffeners.
2. 600V cable trays shall be installed along C1 stiffeners.
3. See Sheets E- 270B AND E-270C for cable trays location.
4. Provide strut channels on C1 and C2 stiffeners in each tower shaft from elevations 3 m through 143 m.
5. Kellems cable riser support grip shall be installed at top end of cable entering the cable tray. Maximum vertical spacing between cable grips is 30 m.

DETAILS
TOWER AND SUSPENSION CABLE CABLE TRAY LOCATION

SCALE AS NOTED

E-270A

DATE	RG	CALCULATED/ DESIGNED BY	REVISED BY
3/07	RR	CHECKED BY	DATE REVISED

DESIGN OVERSIGHT
BEHZAD GOLEMOHAMMADI

STATE OF CALIFORNIA - DEPARTMENT OF TRANSPORTATION
Caltrans

LAST REVISION 00-00-00
DATE PLOTTED => 5/9/2008
TIME PLOTTED => 2:23:53 PM

ALL DIMENSIONS ARE IN MILLIMETERS UNLESS OTHERWISE SHOWN.

FOR REDUCED PLANS ORIGINAL SCALE IS IN MILLIMETERS 0 20 40 60 80

DGN FILE =>T:\13103\MS\pse\SAS Struc\CCO\SAS CC042\04-0120f1_0275S01.dgn
USERNAME =>llorico

CU 04251

EA 0120F1

DIST	COUNTY	ROUTE	KILOMETER POST TOTAL PROJECT	SHEET No	TOTAL SHEETS
04	SF	80	13.2/13.9	275S2	1204

REGISTERED ELECTRICAL ENGINEER 8/24/07 DATE

PLANS APPROVAL DATE

REGISTERED PROFESSIONAL ENGINEER MANNELL FUMIO TAMAKI No. E 8651 Exp. 9/30/2008 ELECTRICAL STATE OF CALIFORNIA

PB AMERICAS, Inc.
A Parsons Brinckerhoff Company
303 Second St., Suite 700N
San Francisco, CA 94107-1317

The State of California or its officers or agents shall not be responsible for the accuracy or completeness of electronic copies of this plan sheet.

Caltrans now has a web site! To get to the web site, go to http://www.dot.ca.gov

Caltrans Metric

TOWER 600 V CABLE TRAY LOCATION

TOWER	CL DIAPHRAGM (ELEVATION)	CABLE TRAY ID
NW	48.130 m	3T20H
NW	53.530 m	3T20J
NW	56.000 m	3T20K
NW	59.000 m	3T20L
NW	62.000 m	3T20M
NW	65.530 m	3T20N
NW	68.000 m	3T20P
NW	71.000 m	3T20Q
NW	74.000 m	3T20R
NW	77.530 m	3T20S
NW	80.750 m	3T21A
NW	85.250 m	3T21B
NW	89.530 m	3T21C
NW	92.500 m	3T21D
NW	95.500 m	3T21E
NW	99.530 m	3T21F
NW	102.500 m	3T21G
NW	105.500 m	3T21H
NW	109.530 m	3T21J
NW	111.670 m	3T21K
NW	116.330 m	3T21L
NW	119.530 m	3T21M
NW	123.530 m	3T21N
NW	127.530 m	3T21P
NW	131.530 m	3T21Q
NW	135.530 m	3T21R
NW	139.530 m	3T21S

TOWER	CL DIAPHRAGM (ELEVATION)	CABLE TRAY ID
NE	13.000 m	3T22A
NE	15.000 m	3T22AA
NE	18.530 m	3T22B
NE	23.530 m	3T22C
NE	28.530 m	3T22D
NE	33.530 m	3T22E
NE	38.530 m	3T22F
NE	43.530 m	3T22G
NE	48.130 m	3T22H
NE	53.530 m	3T22J
NE	56.000 m	3T22K

TOWER	CL DIAPHRAGM (ELEVATION)	CABLE TRAY ID
SW	13.000 m	3T24A
SW	15.000 m	3T24AA
SW	18.530 m	3T24B
SW	23.530 m	3T24C
SW	28.530 m	3T24D
SW	33.530 m	3T24E
SW	38.530 m	3T24F
SW	43.530 m	3T24G
SW	48.130 m	3T24H
SW	53.530 m	3T24J
SW	56.000 m	3T24K
SW	59.000 m	3T24L
SW	62.000 m	3T24M
SW	65.530 m	3T24N
SW	68.000 m	3T24P
SW	71.000 m	3T24Q
SW	74.000 m	3T24R
SW	77.530 m	3T24S
SW	80.750 m	3T25A
SW	85.250 m	3T25B
SW	89.530 m	3T25C
SW	92.500 m	3T25D
SW	95.500 m	3T25E
SW	99.530 m	3T25F
SW	102.500 m	3T25G
SW	105.500 m	3T25H
SW	109.530 m	3T25J
SW	111.670 m	3T25K
SW	116.330 m	3T25L
SW	119.530 m	3T25M
SW	123.530 m	3T25N
SW	127.530 m	3T25P
SW	131.530 m	3T25Q
SW	135.530 m	3T25R
SW	139.530 m	3T25S

TOWER	CL DIAPHRAGM (ELEVATION)	CABLE TRAY ID
SE	13.000 m	3T26A
SE	15.000 m	3T26AA
SE	18.530 m	3T26B
SE	23.530 m	3T26C
SE	28.530 m	3T26D
SE	33.530 m	3T26E
SE	38.530 m	3T26F
SE	43.530 m	3T26G
SE	48.130 m	3T26H
SE	53.530 m	3T26J
SE	56.000 m	3T26K
SE	59.000 m	3T26L
SE	62.000 m	3T26M
SE	65.530 m	3T26N
SE	68.000 m	3T26P
SE	71.000 m	3T26Q
SE	74.000 m	3T26R
SE	77.530 m	3T26S
SE	80.750 m	3T27A
SE	85.250 m	3T27B
SE	89.530 m	3T27C
SE	92.500 m	3T27D
SE	95.500 m	3T27E
SE	99.530 m	3T27F
SE	102.500 m	3T27G
SE	105.500 m	3T27H
SE	109.530 m	3T27J
SE	111.670 m	3T27K
SE	116.330 m	3T27L
SE	119.530 m	3T27M
SE	123.530 m	3T27N
SE	127.530 m	3T27P
SE	131.530 m	3T27Q
SE	135.530 m	3T27R
SE	139.530 m	3T27S

TOWER TOS/COM CABLE TRAY LOCATION

TOWER	CL DIAPHRAGM (ELEVATION)	CABLE TRAY ID

TOWER	CL DIAPHRAGM (ELEVATION)	CABLE TRAY ID
NE	13.000 m	3T42A
NE	15.000 m	3T42AA
NE	18.530 m	3T42B
NE	23.530 m	3T42C
NE	28.530 m	3T42D
NE	33.530 m	3T42E
NE	38.530 m	3T42F
NE	43.530 m	3T42G
NE	48.130 m	3T42H
NE	53.530 m	3T42J
NE	56.000 m	3T42K
NE	59.000 m	3T42L
NE	62.000 m	3T42M
NE	65.530 m	3T42N
NE	68.000 m	3T42P
NE	71.000 m	3T42Q
NE	74.000 m	3T42R
NE	77.530 m	3T42S
NE	80.750 m	3T43A
NE	85.250 m	3T43B
NE	89.530 m	3T43C
NE	92.500 m	3T43D
NE	95.500 m	3T43E
NE	99.530 m	3T43F
NE	102.500 m	3T43G
NE	105.500 m	3T43H
NE	109.530 m	3T43J
NE	111.670 m	3T43K
NE	116.330 m	3T43L
NE	119.530 m	3T43M
NE	123.530 m	3T43N
NE	127.530 m	3T43P
NE	131.530 m	3T43Q
NE	135.530 m	3T43R
NE	139.530 m	3T43S

TOWER	CL DIAPHRAGM (ELEVATION)	CABLE TRAY ID
SW	13.000 m	3T44A
SW	15.000 m	3T44AA
SW	18.530 m	3T44B
SW	23.530 m	3T44C
SW	28.530 m	3T44D
SW	33.530 m	3T44E
SW	38.530 m	3T44F
SW	43.530 m	3T44G
SW	48.130 m	3T44H
SW	53.530 m	3T44J
SW	56.000 m	3T44K
SW	59.000 m	3T44L
SW	62.000 m	3T44M
SW	65.530 m	3T44N
SW	68.000 m	3T44P
SW	71.000 m	3T44Q
SW	74.000 m	3T44R
SW	77.530 m	3T44S
SW	80.750 m	3T45A
SW	85.250 m	3T45B
SW	89.530 m	3T45C
SW	92.500 m	3T45D
SW	95.500 m	3T45E
SW	99.530 m	3T45F
SW	102.500 m	3T45G
SW	105.500 m	3T45H
SW	109.530 m	3T45J
SW	111.670 m	3T45K
SW	116.330 m	3T45L
SW	119.530 m	3T45M
SW	123.530 m	3T45N
SW	127.530 m	3T45P
SW	131.530 m	3T45Q
SW	135.530 m	3T45R
SW	139.530 m	3T45S

TOWER	CL DIAPHRAGM (ELEVATION)	CABLE TRAY ID
SE	48.130 m	3T46H
SE	53.530 m	3T46J
SE	56.000 m	3T46K
SE	59.000 m	3T46L
SE	62.000 m	3T46M
SE	65.530 m	3T46N
SE	68.000 m	3T46P
SE	71.000 m	3T46Q
SE	74.000 m	3T46R
SE	77.530 m	3T46S
SE	80.750 m	3T47A
SE	85.250 m	3T47B
SE	89.530 m	3T47C
SE	92.500 m	3T47D
SE	95.500 m	3T47E
SE	99.530 m	3T47F
SE	102.500 m	3T47G
SE	105.500 m	3T47H
SE	109.530 m	3T47J
SE	111.670 m	3T47K
SE	116.330 m	3T47L
SE	119.530 m	3T47M
SE	123.530 m	3T47N
SE	127.530 m	3T47P
SE	131.530 m	3T47Q
SE	135.530 m	3T47R
SE	139.530 m	3T47S

NOTES:

1. See Sheets E-270A and E-270C for tower cable trays location and typical installation details.
2. The cable tray elevations specified in the table represents the lower end of cable tray section located within the specified diaphragm plate elevation.
3. Kellems cable riser support grip shall be installed at top end of cable entering the cable tray. Maximum vertical spacing between cable grips is 30 m.

REQUEST FOR INFORMATION NOT ADDRESSED IN THIS CCO REMAIN IN FORCE

MARK	DATE	DESCRIPTIONS	BY	CH'D	CCO#
0	02/19/08	ELECTRICAL MODIFICATIONS	MP EL	RR	42

REVISIONS

CONTRACT CHANGE ORDER NO._____
SHEET _____ OF _____

DETAILS
TOWER AND AND SUSPENSION CABLE CABLE TRAY LOCATION
SCALE AS NOTED

E-270B

REVISED BY	DATE REVISED
DATE 3/07	7/07
RG	RR

CALCULATED/DESIGNED BY
CHECKED BY

DESIGN OVERSIGHT
BEHZAD GOLEMOHAMMADI

STATE OF CALIFORNIA - DEPARTMENT OF TRANSPORTATION
Caltrans

LAST REVISION 00-00-00
DATE PLOTTED => 5/9/2008
TIME PLOTTED => 2:24:14 PM

ALL DIMENSIONS ARE IN MILLIMETERS UNLESS OTHERWISE SHOWN.

FOR REDUCED PLANS ORIGINAL SCALE IS IN MILLIMETERS 0 20 40 60 80

DGN FILE =>T:\13103\MS\pse\SAS Struc\CCO\SAS CCO42\04-0120f1_0275S02.dgn
USERNAME =>llorico

CU 04251

EA 0120F1

DIST	COUNTY	ROUTE	KILOMETER POST TOTAL PROJECT	SHEET No	TOTAL SHEETS
04	SF	80	13.2/13.9	275S3	1204

REGISTERED ELECTRICAL ENGINEER 8/24/07 DATE

PLANS APPROVAL DATE

REGISTERED PROFESSIONAL ENGINEER MANNELL FUMIO TAKAKI No. E 8651 Exp. 9/30/2008 ELECTRICAL STATE OF CALIFORNIA

PB AMERICAS, Inc.
A Parsons Brinckerhoff Company
303 Second St., Suite 700N
San Francisco, CA 94107-1317

The State of California or its officers or agents shall not be responsible for the accuracy or completeness of electronic copies of this plan sheet.

Caltrans now has a web site! To get to the web site, go to http://www.dot.ca.gov

Caltrans Metric

REQUEST FOR INFORMATION NOT ADDRESSED IN THIS CCO REMAIN IN FORCE					
0	02/19/08	ELECTRICAL MODIFICATIONS	MP EL	RR	42
MARK	DATE	DESCRIPTIONS	BY	CH'D	CCO#
REVISIONS					

CONTRACT CHANGE ORDER NO. _____
SHEET _____ OF _____

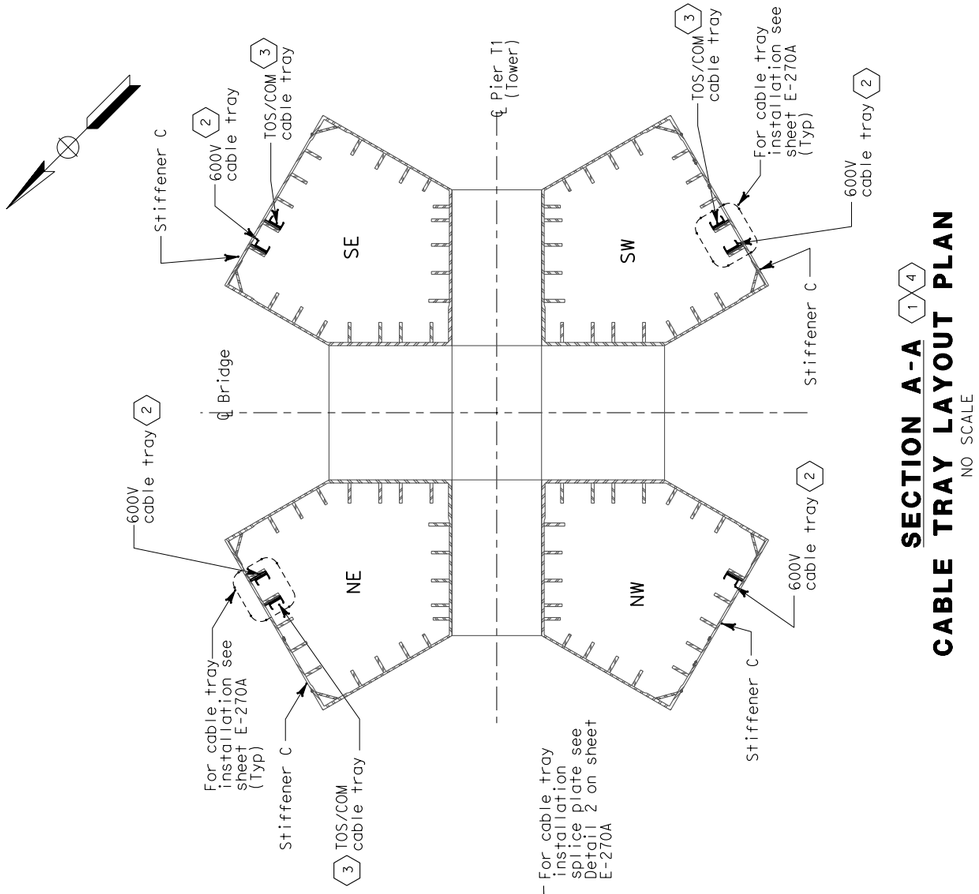

SECTION A-A (1)(4)
CABLE TRAY LAYOUT PLAN
NO SCALE

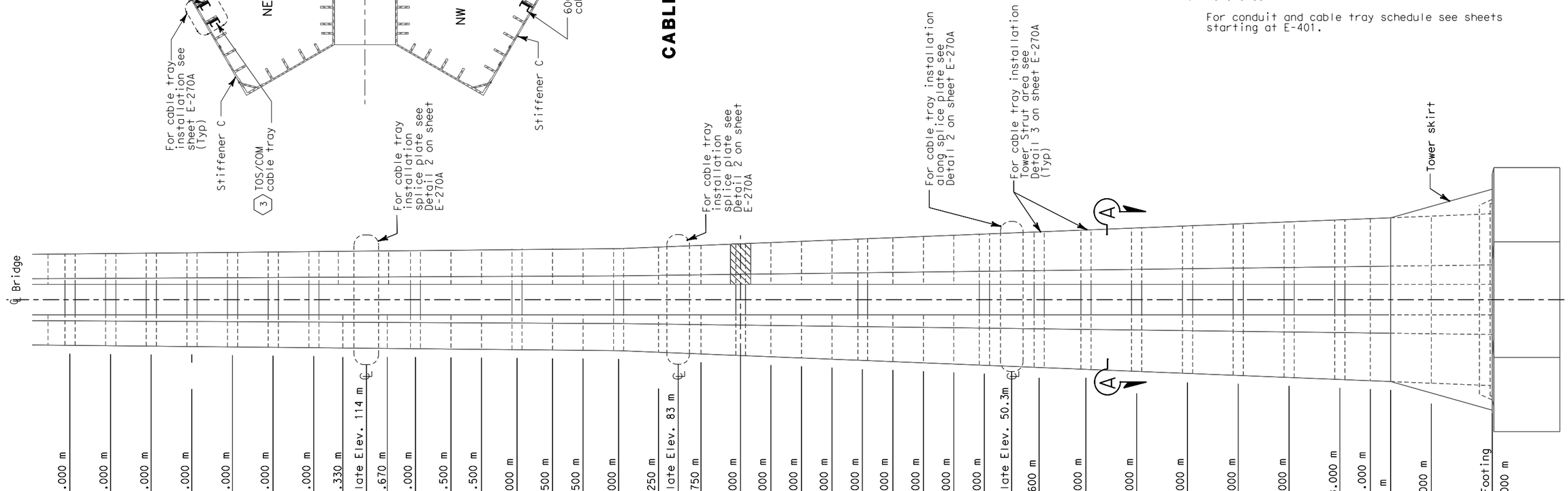

ELEVATION VIEW
1:250

SHEET NOTE:

(1) For cable tray tag numbers see sheet E-270B.
(2) 600V cable trays shall be installed along C1 stiffeners.
(3) TOS/COM cable trays shall be installed along C2 stiffeners.
(4) All cable tray installed in the tower shall be ladder type with cover.

NOTE:

1. Reference:

   For conduit and cable tray schedule see sheets starting at E-401.

DETAILS
TOWER AND SUSPENSION CABLE CABLE TRAY LOCATION
SCALE AS NOTED

E-270C

CALCULATED/ DESIGNED BY	RG	DATE 3/07	REVISED BY
CHECKED BY	RR	7/07	DATE REVISED

STATE OF CALIFORNIA - DEPARTMENT OF TRANSPORTATION
Caltrans

DESIGN OVERSIGHT
BEHZAD GOLEMOHAMMADI

LAST REVISION 00-00-00
DATE PLOTTED => 4/4/2008
TIME PLOTTED => 4:57:38 PM

ALL DIMENSIONS ARE IN MILLIMETERS UNLESS OTHERWISE SHOWN.

FOR REDUCED PLANS ORIGINAL SCALE IS IN MILLIMETERS 0 20 40 60 80

DGN FILE =>T:\13103\MS\pse\SAS Struc\CCO\SAS CCO42\04-0120f1_0275S03.dgn
USERNAME =>llorico

CU 04251

EA 0120F1

DIST	COUNTY	ROUTE	KILOMETER POST TOTAL PROJECT	SHEET No	TOTAL SHEETS
04	SF	80	13.2/13.9	276R1	1204

REGISTERED ELECTRICAL ENGINEER 12/19/02 DATE

12-6-04
PLANS APPROVAL DATE

REGISTERED PROFESSIONAL ENGINEER JENS ERLINGSSON No. 8249 Exp. 9/30/06 ELECTRICAL STATE OF CALIFORNIA

PB POWER, Inc.
A Parsons Brinckerhoff Company
303 Second St., Suite 700N
San Francisco, CA 94107-1317

The State of California or its officers or agents shall not be responsible for the accuracy or completeness of electronic copies of this plan sheet.

Caltrans now has a web site! To get to the web site, go to http://www.dot.ca.gov

Caltrans Metric

REGISTERED PROFESSIONAL ENGINEER MARNELL FUMIO TAKAKI No. E 8651 Exp. 9/30/2008 ELECTRICAL STATE OF CALIFORNIA

FOR REVISION ONLY

REQUEST FOR INFORMATION NOT ADDRESSED IN THIS CCO REMAIN IN FORCE

MARK	DATE	DESCRIPTIONS	BY	CH'D	CCO#
1	02/19/08	ELECTRICAL MODIFICATIONS	MP EL	RR	42

REVISIONS

CONTRACT CHANGE ORDER NO._____
SHEET _____ OF _____

MAIN CABLE ROADWAY AND DOWNLIGHT LIGHTING SCHEDULE

Circuit Number	Station	Location: Roadway side	Location: Suspend at Panel Point	Mounting	Ltg. Fixture Type	Number/ Wattage	Remarks
S-3021	56+78	-	PP-22	Main Cable	MSR-2B-C	2-400 W	with Remote Ballast
S-3021				Main Cable	MSR-2A-C	1-400 W	with Remote Ballast
S-3021	57+18	-	PP-30	Main Cable	MSR-2B-C	2-400 W	with Remote Ballast
S-3021				Main Cable	MSR-2A-C	1-400 W	with Remote Ballast
S-3021	57+58	-	PP-38	Main Cable	MSR-2-C	3-400 W	with Remote Ballast
S-3022	57+98	-	PP-46	Main Cable	MSR-2-C	3-400 W	with Remote Ballast
S-3022	58+38	-	PP-54	Main Cable	MSR-2-C	3-400 W	with Remote Ballast
S-3022	58+78	-	PP-62	Main Cable	MSR-2-C	3-400 W	with Remote Ballast
S-3023	59+18	-	PP-70	Main Cable	MSR-2-C	3-400 W	with Remote Ballast
S-3023	59+58	-	PP-78	Main Cable	MSR-2B-C	3-400 W	with Remote Ballast
A-3011	56+18	-	PP-10	Main Cable	MAD-4-C	1-175 W	with Remote Ballast
A-3011	56+28	-	PP-12	Main Cable	MAD-4-C	1-175 W	with Remote Ballast
A-3011	56+38	-	PP-14	Main Cable	MAD-4-C	1-175 W	with Remote Ballast
A-3011	56+48	-	PP-16	Main Cable	MAD-3-C	1-250 W	with Remote Ballast
A-3011	56+58	-	PP-18	Main Cable	MAD-3-C	1-250 W	with Remote Ballast
A-3011	56+68	-	PP-20	Main Cable	MAD-3-C	1-250 W	with Remote Ballast
A-3011	56+78	-	PP-22	Main Cable	MAD-3-C	1-250 W	with Remote Ballast
A-3011	56+88	-	PP-24	Main Cable	MAD-2-C	1-400 W	with Remote Ballast
A-3011	56+98	-	PP-26	Main Cable	MAD-2-C	1-400 W	with Remote Ballast
A-3011	57+08	-	PP-28	Main Cable	MAD-2-C	1-400 W	with Remote Ballast
A-3011	57+18	-	PP-30	Main Cable	MAD-2-C	1-400 W	with Remote Ballast
A-3011	57+28	-	PP-32	Main Cable	MAD-2-C	1-400 W	with Remote Ballast
A-3011	57+38	-	PP-34	Main Cable	MAD-2-C	1-400 W	with Remote Ballast
A-3011	57+48	-	PP-36	Main Cable	MAD-2-C	1-400 W	with Remote Ballast
A-3011	57+58	-	PP-38	Main Cable	MAD-2-C	1-400 W	with Remote Ballast
A-3011	57+68	-	PP-40	Main Cable	MAD-2-C	1-400 W	with Remote Ballast
A-3012	57+88	-	PP-44	Main Cable	MAD-2-C	1-400 W	with Remote Ballast
A-3012	57+98	-	PP-46	Main Cable	MAD-2-C	1-400 W	with Remote Ballast
A-3012	58+08	-	PP-48	Main Cable	MAD-2-C	1-400 W	with Remote Ballast
A-3012	58+18	-	PP-50	Main Cable	MAD-2-C	1-400 W	with Remote Ballast
A-3012	58+28	-	PP-52	Main Cable	MAD-2-C	1-400 W	with Remote Ballast
A-3012	58+38	-	PP-54	Main Cable	MAD-2-C	1-400 W	with Remote Ballast
A-3012	58+48	-	PP-56	Main Cable	MAD-2-C	1-400 W	with Remote Ballast
A-3012	58+58	-	PP-58	Main Cable	MAD-2-C	1-400 W	with Remote Ballast
A-3012	58+68	-	PP-60	Main Cable	MAD-2-C	1-400 W	with Remote Ballast
A-3013	58+78	-	PP-62	Main Cable	MAD-2-C	1-400 W	with Remote Ballast
A-3013	58+88	-	PP-64	Main Cable	MAD-2-C	1-400 W	with Remote Ballast
A-3013	58+98	-	PP-66	Main Cable	MAD-2-C	1-400 W	with Remote Ballast
A-3013	59+08	-	PP-68	Main Cable	MAD-3-C	1-250 W	with Remote Ballast
A-3013	59+18	-	PP-70	Main Cable	MAD-3-C	1-250 W	with Remote Ballast
A-3013	59+28	-	PP-72	Main Cable	MAD-3-C	1-250 W	with Remote Ballast
A-3013	59+38	-	PP-74	Main Cable	MAD-3-C	1-250 W	with Remote Ballast
A-3013	59+48	-	PP-76	Main Cable	MAD-3-C	1-250 W	with Remote Ballast
A-3013	59+58	-	PP-78	Main Cable	MAD-3-C	1-250 W	with Remote Ballast
A-3013	59+68	-	PP-80	Main Cable	MAD-3-C	1-250 W	with Remote Ballast
A-3013	59+78	-	PP-82	Main Cable	MAD-3-C	1-250 W	with Remote Ballast
A-3013	59+88	-	PP-84	Main Cable	MAD-4-C	1-175 W	with Remote Ballast
A-3013	59+98	-	PP-86	Main Cable	MAD-4-C	1-175 W	with Remote Ballast
A-3013	60+08	-	PP-88	Main Cable	MAD-4-C	1-175 W	with Remote Ballast
A-3013	60+18	-	PP-90	Main Cable	MAD-4-C	1-175 W	with Remote Ballast
A-3013	60+28	-	PP-92	Main Cable	MAD-4-C	1-175 W	with Remote Ballast
A-3013	60+38	-	PP-94	Main Cable	MAD-4-C	1-175 W	with Remote Ballast

SUSPENDER UPLIGHT LIGHTING SCHEDULE

Circuit Number	Station 1	Location: Roadway side	Location: Suspend at Panel Point	Mounting 1	Ltg. Fixture Type	Number/ Wattage	Remarks
A-3001	56+16	North	Near PP-9	Bridge Deck	MAU-5-D	1-100 W	with Remote Ballast
A-3001	56+22	North	Near PP-11	Bridge Deck	MAU-5-D	1-100 W	with Remote Ballast
A-3001	56+28	North	PP-12	Suspender Base	MAU-4-D	2-175 W	with Remote Ballast
A-3001	56+38	North	PP-14	Suspender Base	MAU-4-D	2-175 W	with Remote Ballast
A-3001	56+48	North	PP-16	Suspender Base	MAU-3-D	2-250 W	with Remote Ballast
A-3001	56+58	North	PP-18	Suspender Base	MAU-3-D	2-250 W	with Remote Ballast
A-3001	56+68	North	PP-20	Suspender Base	MAU-3-D	2-250 W	with Remote Ballast
A-3001	56+78	North	PP-22	Suspender Base	MAU-3-D	2-250 W	with Remote Ballast
A-3001	56+88	North	PP-24	Suspender Base	MAU-2-D	2-400 W	with Remote Ballast
A-3002	56+98	North	PP-26	Suspender Base	MAU-2-D	2-400 W	with Remote Ballast
A-3002	57+08	North	PP-28	Suspender Base	MAU-2-D	2-400 W	with Remote Ballast
A-3002	57+18	North	PP-30	Suspender Base	MAU-2-D	2-400 W	with Remote Ballast
A-3002	57+28	North	PP-32	Suspender Base	MAU-2-D	2-400 W	with Remote Ballast
A-3002	57+38	North	PP-34	Suspender Base	MAU-2-D	2-400 W	with Remote Ballast
A-3002	57+48	North	PP-36	Suspender Base	MAU-2-D	2-400 W	with Remote Ballast
A-3003	57+58	North	PP-38	Suspender Base	MAU-2-D	2-400 W	with Remote Ballast
A-3003	57+68	North	PP-40	Suspender Base	MAU-2-D	2-400 W	with Remote Ballast
A-3003	57+78	North	PP-42	Suspender Base	MAU-2-D	2-400 W	with Remote Ballast
A-3003	57+88	North	PP-44	Suspender Base	MAU-2-D	2-400 W	with Remote Ballast
A-3003	57+98	North	PP-46	Suspender Base	MAU-2-D	2-400 W	with Remote Ballast
A-3003	58+08	North	PP-48	Suspender Base	MAU-2-D	2-400 W	with Remote Ballast
A-3004	58+18	North	PP-50	Suspender Base	MAU-2-D	2-400 W	with Remote Ballast
A-3004	58+28	North	PP-52	Suspender Base	MAU-2-D	2-400 W	with Remote Ballast
A-3004	58+38	North	PP-54	Suspender Base	MAU-2-D	2-400 W	with Remote Ballast
A-3004	58+48	North	PP-56	Suspender Base	MAU-2-D	2-400 W	with Remote Ballast
A-3004	58+58	North	PP-58	Suspender Base	MAU-2-D	2-400 W	with Remote Ballast
A-3004	58+68	North	PP-60	Suspender Base	MAU-2-D	2-400 W	with Remote Ballast
A-3005	58+78	North	PP-62	Suspender Base	MAU-2-D	2-400 W	with Remote Ballast
A-3005	58+88	North	PP-64	Suspender Base	MAU-3-D	2-250 W	with Remote Ballast
A-3005	58+98	North	PP-66	Suspender Base	MAU-3-D	2-250 W	with Remote Ballast
A-3005	59+08	North	PP-68	Suspender Base	MAU-3-D	2-250 W	with Remote Ballast
A-3005	59+18	North	PP-70	Suspender Base	MAU-3-D	2-250 W	with Remote Ballast
A-3005	59+28	North	PP-72	Suspender Base	MAU-3-D	2-250 W	with Remote Ballast
A-3006	59+38	North	PP-74	Suspender Base	MAU-3-D	2-250 W	with Remote Ballast
A-3006	59+48	North	PP-76	Suspender Base	MAU-3-D	2-250 W	with Remote Ballast
A-3006	59+58	North	PP-78	Suspender Base	MAU-3-D	2-250 W	with Remote Ballast
A-3006	59+68	North	PP-80	Suspender Base	MAU-4-D	2-175 W	with Remote Ballast
A-3006	59+78	North	PP-82	Suspender Base	MAU-4-D	2-175 W	with Remote Ballast
A-3006	59+88	North	PP-84	Suspender Base	MAU-4-D	2-175 W	with Remote Ballast
A-3006	59+98	North	PP-86	Suspender Base	MAU-4-D	2-175 W	with Remote Ballast
A-3006	60+08	North	PP-88	Suspender Base	MAU-4-D	2-175 W	with Remote Ballast
A-3006	60+18	North	West PP-90	Suspender Base	MAU-4-D	1-175 W	with Remote Ballast
A-3006	60+23	North	Near PP-91	Bridge Deck	MAU-5-D	1-100 W	with Remote Ballast
A-3006	60+33	North	PP-93	Bridge Deck	MAU-5-D	1-100 W	with Remote Ballast

1 1

NOTES:

1. For Roadway and Suspender lightning wiring diagrams see sheets E-236 to E-240.

SAS SUPERSTRUCTURE - WB

DETAILS
TOWER AND SUSPENSION CABLE LIGHTING SCHEDULES

NO SCALE

E-271

STATE OF CALIFORNIA - DEPARTMENT OF TRANSPORTATION
Caltrans

DESIGN OVERSIGHT
BEHZAD GOLEMOHAMMADI

CALCULATED/ DESIGNED BY | CHECKED BY | REVISED BY | DATE REVISED
JP | EDC | DATE 09/01 | 11/01

LAST REVISION 00-00-00
DATE PLOTTED => 4/4/2008
TIME PLOTTED => 4:58:05 PM

FOR REDUCED PLANS ORIGINAL SCALE IS IN MILLIMETERS 0 20 40 60 80

DGN FILE =>T:\13103\MS\pse\SAS Struc\CCO\SAS CC042\04-0120f1_0276R01.dgn
USERNAME =>llorico

CU 04251 | EA 0120F1

DIST	COUNTY	ROUTE	KILOMETER POST TOTAL PROJECT	SHEET No	TOTAL SHEETS
04	SF	80	13.2/13.9	277R1	1204

Jens Erlingsson 12/19/02
REGISTERED ELECTRICAL ENGINEER DATE

12-6-04
PLANS APPROVAL DATE

PB POWER, Inc.
A Parsons Brinckerhoff Company
303 Second St., Suite 700N
San Francisco, CA 94107-1317

REGISTERED PROFESSIONAL ENGINEER JENS ERLINGSSON No. 8249 Exp. 9/30/06 ELECTRICAL STATE OF CALIFORNIA

The State of California or its officers or agents shall not be responsible for the accuracy or completeness of electronic copies of this plan sheet.

Caltrans now has a web site! To get to the web site, go to http://www.dot.ca.gov

REQUEST FOR INFORMATION NOT ADDRESSED IN THIS CCO REMAIN IN FORCE

MARK	DATE	DESCRIPTIONS	BY	CH'D	CCO#
1	02/19/08	ELECTRICAL MODIFICATIONS	MP EL	RR	42

REVISIONS

CONTRACT CHANGE ORDER NO.________
SHEET _____ OF _____

MAIN CABLE ROADWAY AND DOWNLIGHT LIGHTING SCHEDULE

Circuit Number	Station	Location: Roadway side	Location: Suspend at Panel Point	Mounting	Ltg. Fixture Type	Number/ Wattage	Remarks
S-3051	56+69		PP-22	Main Cable	MSR-2B-C	2-400 W	with Remote Ballast
S-3051					MSR-2A-C	1-400 W	with Remote Ballast
S-3051	57+09		PP-30	Main Cable	MSR-2B-C	2-400 W	with Remote Ballast
S-3051					MSR-2A-C	1-400 W	with Remote Ballast
S-3051	57+49		PP-38	Main Cable	MSR-2-C	3-400 W	with Remote Ballast
S-3052	57+89		PP-46	Main Cable	MSR-2-C	3-400 W	with Remote Ballast
S-3052	58+29		PP-54	Main Cable	MSR-2-C	3-400 W	with Remote Ballast
S-3052	58+69		PP-62	Main Cable	MSR-2-C	3-400 W	with Remote Ballast
S-3053	59+09		PP-70	Main Cable	MSR-2-C	3-400 W	with Remote Ballast
S-3053	59+49		PP-78	Main Cable	MSR-2B-C	2-400 W	with Remote Ballast
S-3053					MSR-2-C	1-400 W	with Remote Ballast
S-3053	59+59		PP-80	Main Cable	MSR-2B-C	2-400 W	with Remote Ballast
A-3041	56+09		PP-10	Main Cable	MAD-4-C	1-175 W	with Remote Ballast
A-3041	56+19		PP-12	Main Cable	MAD-4-C	1-175 W	with Remote Ballast
A-3041	56+29		PP-14	Main Cable	MAD-4-C	1-175 W	with Remote Ballast
A-3041	56+39		PP-16	Main Cable	MAD-3-C	1-250 W	with Remote Ballast
A-3041	56+49		PP-18	Main Cable	MAD-3-C	1-250 W	with Remote Ballast
A-3041	56+59		PP-20	Main Cable	MAD-3-C	1-250 W	with Remote Ballast
A-3041	56+69		PP-22	Main Cable	MAD-3-C	1-250 W	with Remote Ballast
A-3041	56+79		PP-24	Main Cable	MAD-2-C	1-400 W	with Remote Ballast
A-3041	56+89		PP-26	Main Cable	MAD-2-C	1-400 W	with Remote Ballast
A-3041	56+99		PP-28	Main Cable	MAD-2-C	1-400 W	with Remote Ballast
A-3041	57+09		PP-30	Main Cable	MAD-2-C	1-400 W	with Remote Ballast
A-3041	57+19		PP-32	Main Cable	MAD-2-C	1-400 W	with Remote Ballast
A-3041	57+29		PP-34	Main Cable	MAD-2-C	1-400 W	with Remote Ballast
A-3041	57+39		PP-36	Main Cable	MAD-2-C	1-400 W	with Remote Ballast
A-3041	57+49		PP-38	Main Cable	MAD-2-C	1-400 W	with Remote Ballast
A-3041	57+59		PP-40	Main Cable	MAD-2-C	1-400 W	with Remote Ballast
A-3042	57+79		PP-44	Main Cable	MAD-2-C	1-400 W	with Remote Ballast
A-3042	57+89		PP-46	Main Cable	MAD-2-C	1-400 W	with Remote Ballast
A-3042	57+99		PP-48	Main Cable	MAD-2-C	1-400 W	with Remote Ballast
A-3042	58+09		PP-50	Main Cable	MAD-2-C	1-400 W	with Remote Ballast
A-3042	58+19		PP-52	Main Cable	MAD-2-C	1-400 W	with Remote Ballast
A-3042	58+29		PP-54	Main Cable	MAD-2-C	1-400 W	with Remote Ballast
A-3042	58+39		PP-56	Main Cable	MAD-2-C	1-400 W	with Remote Ballast
A-3042	58+49		PP-58	Main Cable	MAD-2-C	1-400 W	with Remote Ballast
A-3042	58+59		PP-60	Main Cable	MAD-2-C	1-400 W	with Remote Ballast
A-3043	58+69		PP-62	Main Cable	MAD-2-C	1-400 W	with Remote Ballast
A-3043	58+79		PP-64	Main Cable	MAD-2-C	1-400 W	with Remote Ballast
A-3043	58+89		PP-66	Main Cable	MAD-2-C	1-400 W	with Remote Ballast
A-3043	58+99		PP-68	Main Cable	MAD-3-C	1-250 W	with Remote Ballast
A-3043	59+09		PP-70	Main Cable	MAD-3-C	1-250 W	with Remote Ballast
A-3043	59+19		PP-72	Main Cable	MAD-3-C	1-250 W	with Remote Ballast
A-3043	59+29		PP-74	Main Cable	MAD-3-C	1-250 W	with Remote Ballast
A-3043	59+39		PP-76	Main Cable	MAD-3-C	1-250 W	with Remote Ballast
A-3043	59+49		PP-78	Main Cable	MAD-3-C	1-250 W	with Remote Ballast
A-3043	59+59		PP-80	Main Cable	MAD-3-C	1-250 W	with Remote Ballast
A-3043	59+69		PP-82	Main Cable	MAD-3-C	1-250 W	with Remote Ballast
A-3043	59+79		PP-84	Main Cable	MAD-4-C	1-175 W	with Remote Ballast
A-3043	59+89		PP-86	Main Cable	MAD-4-C	1-175 W	with Remote Ballast
A-3043	59+99		PP-88	Main Cable	MAD-4-C	1-175 W	with Remote Ballast
A-3043	60+09		PP-90	Main Cable	MAD-4-C	1-175 W	with Remote Ballast
A-3043	60+19		PP-92	Main Cable	MAD-4-C	1-175 W	with Remote Ballast
A-3043	60+29		PP-94	Main Cable	MAD-4-C	1-175 W	with Remote Ballast

SUSPENDER UPLIGHT LIGHTING SCHEDULE

Circuit Number	Station 1	Location: Roadway side 1	Location: Suspend at Panel Point	Mounting	Ltg. Fixture Type	Number/ Wattage	Remarks
A-3031	56+07	South	Near PP-9	Bridge Deck	MAU-5-D	1-100 W	with Remote Ballast
A-3031	56+13	South	Near PP-11	Bridge Deck	MAU-5-D	1-100 W	with Remote Ballast
A-3031	56+19	South	PP-12	Suspender base	MAU-4-D	2-175 W	with Remote Ballast
A-3031	56+29	South	PP-14	Suspender base	MAU-4-D	2-175 W	with Remote Ballast
A-3031	56+39	South	PP-16	Suspender base	MAU-3-D	2-250 W	with Remote Ballast
A-3031	56+49	South	PP-18	Suspender base	MAU-3-D	2-250 W	with Remote Ballast
A-3031	56+59	South	PP-20	Suspender base	MAU-3-D	2-250 W	with Remote Ballast
A-3031	56+69	South	PP-22	Suspender base	MAU-3-D	2-250 W	with Remote Ballast
A-3031	56+79	South	PP-24	Suspender base	MAU-2-D	2-400 W	with Remote Ballast
A-3032	56+89	South	PP-26	Suspender base	MAU-2-D	2-400 W	with Remote Ballast
A-3032	56+99	South	PP-28	Suspender base	MAU-2-D	2-400 W	with Remote Ballast
A-3032	57+09	South	PP-30	Suspender base	MAU-2-D	2-400 W	with Remote Ballast
A-3032	57+19	South	PP-32	Suspender base	MAU-2-D	2-400 W	with Remote Ballast
A-3032	57+29	South	PP-34	Suspender base	MAU-2-D	2-400 W	with Remote Ballast
A-3032	57+39	South	PP-36	Suspender base	MAU-2-D	2-400 W	with Remote Ballast
A-3033	57+49	South	PP-38	Suspender base	MAU-2-D	2-400 W	with Remote Ballast
A-3033	57+59	South	PP-40	Suspender base	MAU-2-D	2-400 W	with Remote Ballast
A-3033	57+69	South	PP-42	Suspender base	MAU-2-D	2-400 W	with Remote Ballast
A-3033	57+79	South	PP-44	Suspender base	MAU-2-D	2-400 W	with Remote Ballast
A-3033	57+89	South	PP-46	Suspender base	MAU-2-D	2-400 W	with Remote Ballast
A-3033	57+99	South	PP-48	Suspender base	MAU-2-D	2-400 W	with Remote Ballast
A-3034	58+09	South	PP-50	Suspender base	MAU-2-D	2-400 W	with Remote Ballast
A-3034	58+19	South	PP-52	Suspender base	MAU-2-D	2-400 W	with Remote Ballast
A-3034	58+29	South	PP-54	Suspender base	MAU-2-D	2-400 W	with Remote Ballast
A-3034	58+39	South	PP-56	Suspender base	MAU-2-D	2-400 W	with Remote Ballast
A-3034	58+49	South	PP-58	Suspender base	MAU-2-D	2-400 W	with Remote Ballast
A-3034	58+59	South	PP-60	Suspender base	MAU-2-D	2-400 W	with Remote Ballast
A-3035	58+69	South	PP-62	Suspender base	MAU-2-D	2-400 W	with Remote Ballast
A-3035	58+79	South	PP-64	Suspender base	MAU-3-D	2-250 W	with Remote Ballast
A-3035	58+89	South	PP-66	Suspender base	MAU-3-D	2-250 W	with Remote Ballast
A-3035	58+99	South	PP-68	Suspender base	MAU-3-D	2-250 W	with Remote Ballast
A-3035	59+09	South	PP-70	Suspender base	MAU-3-D	2-250 W	with Remote Ballast
A-3035	59+19	South	PP-72	Suspender base	MAU-3-D	2-250 W	with Remote Ballast
A-3036	59+29	South	PP-74	Suspender base	MAU-3-D	2-250 W	with Remote Ballast
A-3036	59+39	South	PP-76	Suspender base	MAU-3-D	2-250 W	with Remote Ballast
A-3036	59+49	South	PP-78	Suspender base	MAU-3-D	2-250 W	with Remote Ballast
A-3036	59+59	South	PP-80	Suspender base	MAU-4-D	2-175 W	with Remote Ballast
A-3036	59+69	South	PP-82	Suspender base	MAU-4-D	2-175 W	with Remote Ballast
A-3036	59+79	South	PP-84	Suspender base	MAU-4-D	2-175 W	with Remote Ballast
A-3036	59+89	South	PP-86	Suspender base	MAU-4-D	2-175 W	with Remote Ballast
A-3036	59+99	South	PP-88	Suspender base	MAU-4-D	2-175 W	with Remote Ballast
A-3036	60+09	South	West PP-90	Suspender base	MAU-4-D	1-175 W	with Remote Ballast
A-3036	60+15	South	Near PP-91	Bridge Deck	1 MAU-5-D	1 1-100 W	with Remote Ballast
A-3036	60+25	South	PP-93	Bridge Deck	MAU-5-D	1-100 W	with Remote Ballast

1 1 1

NOTES:

1. For Roadway and Suspender lightning wiring diagrams see sheets EE-243 to EE-247.

SAS SUPERSTRUCTURE - EB

REGISTERED PROFESSIONAL ENGINEER MAXWELL FUMIO TAKAKI No. E 8651 Exp. 9/30/2008 ELECTRICAL STATE OF CALIFORNIA

M. F. Takaki
FOR REVISION ONLY

DETAILS
TOWER AND SUSPENSION CABLE LIGHTING SCHEDULES
NO SCALE

E-272

STATE OF CALIFORNIA - DEPARTMENT OF TRANSPORTATION
Caltrans

DESIGN OVERSIGHT	BEHZAD GOLEMOHAMMADI
CALCULATED/ DESIGNED BY	JP
CHECKED BY	EDC
REVISED BY	DATE 8/01
DATE REVISED	11/01

Caltrans Metric

FOR REDUCED PLANS ORIGINAL SCALE IS IN MILLIMETERS 0 20 40 60 80

DGN FILE =>T:\13103\MS\pse\SAS Struc\CCO\SAS CC042\04-0120f1_0277R01.dgn
USERNAME =>llorico

CU 04251 EA 0120F1

LAST REVISION 00-00-00 DATE PLOTTED => 4/4/2008 TIME PLOTTED => 4:58:38 PM

REQUEST FOR INFORMATION NOT ADDRESSED IN THIS CCO REMAIN IN FORCE

MARK	DATE	DESCRIPTIONS	BY	CH'D	CCO#
1	02/19/08	ELECTRICAL MODIFICATIONS	MP EL	RR	42

REVISIONS

CONTRACT CHANGE ORDER NO. _____
SHEET _____ OF _____

REGISTERED PROFESSIONAL ENGINEER
SEAN COUGHLIN
No. 12227
Exp. 9/30/08
ELECTRICAL
STATE OF CALIFORNIA

REGISTERED ELECTRICAL ENGINEER

DIST	COUNTY	ROUTE	KILOMETER POST TOTAL PROJECT	SHEET No	TOTAL SHEETS
04	SF	80	13.2/13.9	284R1	1204

REGISTERED CIVIL ENGINEER — DATE 12/19/02

12-6-04
PLANS APPROVAL DATE

REGISTERED PROFESSIONAL ENGINEER
Michael Dahlin
No. 47186
Exp. 12/31/05
CIVIL
STATE OF CALIFORNIA

PB POWER, Inc.
A Parsons Brinckerhoff Company
303 Second St., Suite 700N
San Francisco, CA 94107-1317

The State of California or its officers or agents shall not be responsible for the accuracy or completeness of electronic copies of this plan sheet.

Caltrans now has a web site! To get to the web site, go to http://www.dot.ca.gov

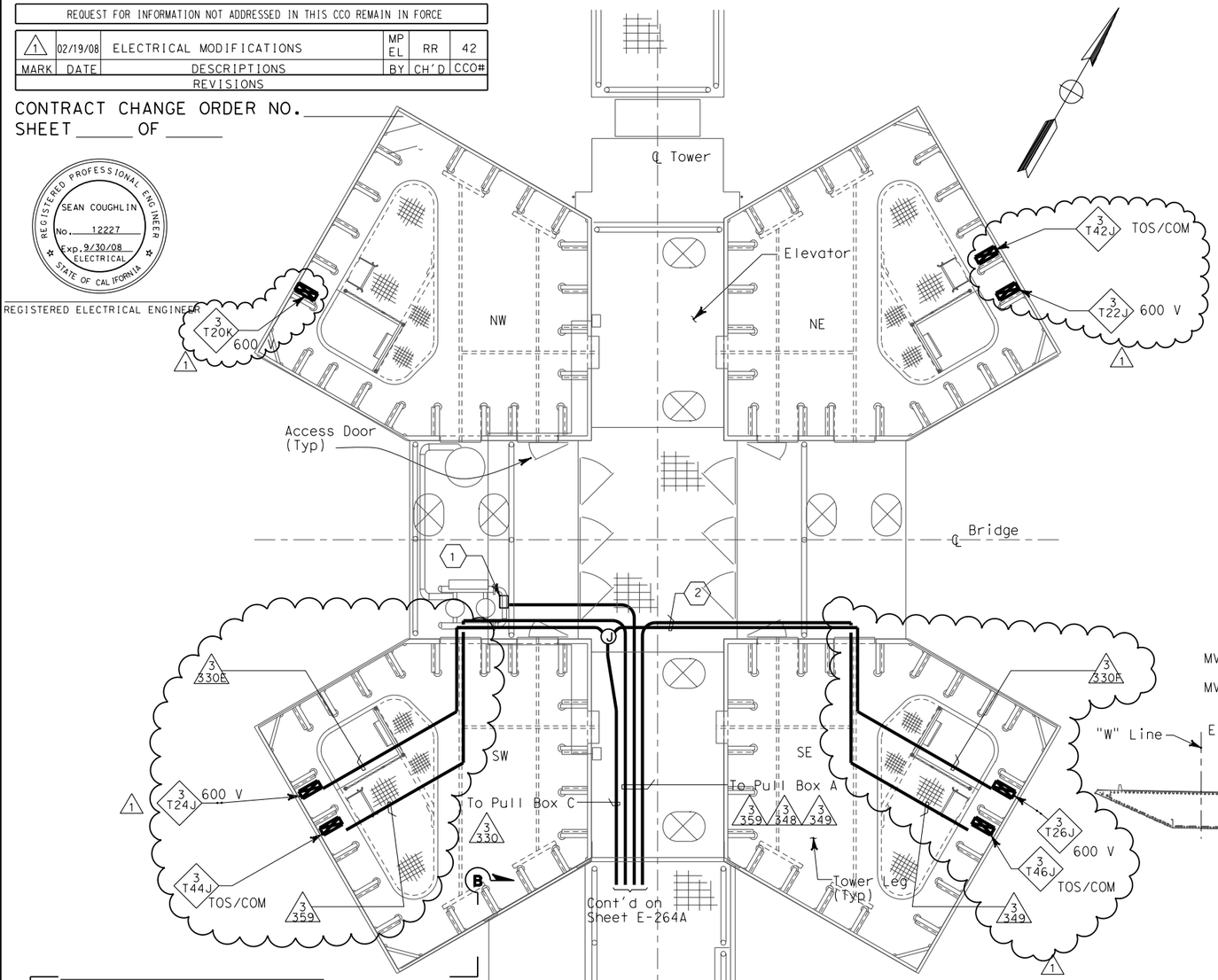

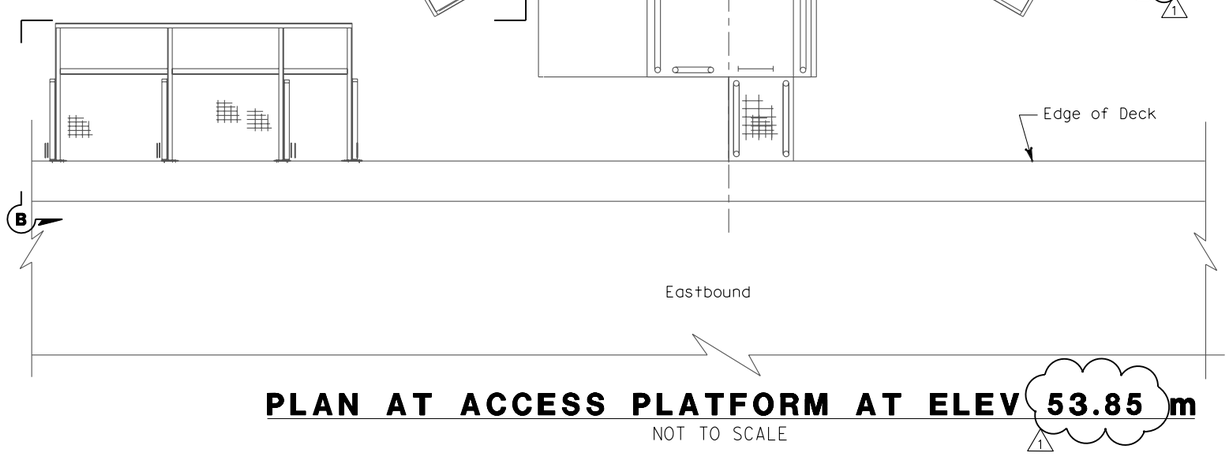

PLAN AT ACCESS PLATFORM AT ELEV 53.85 m

NOT TO SCALE

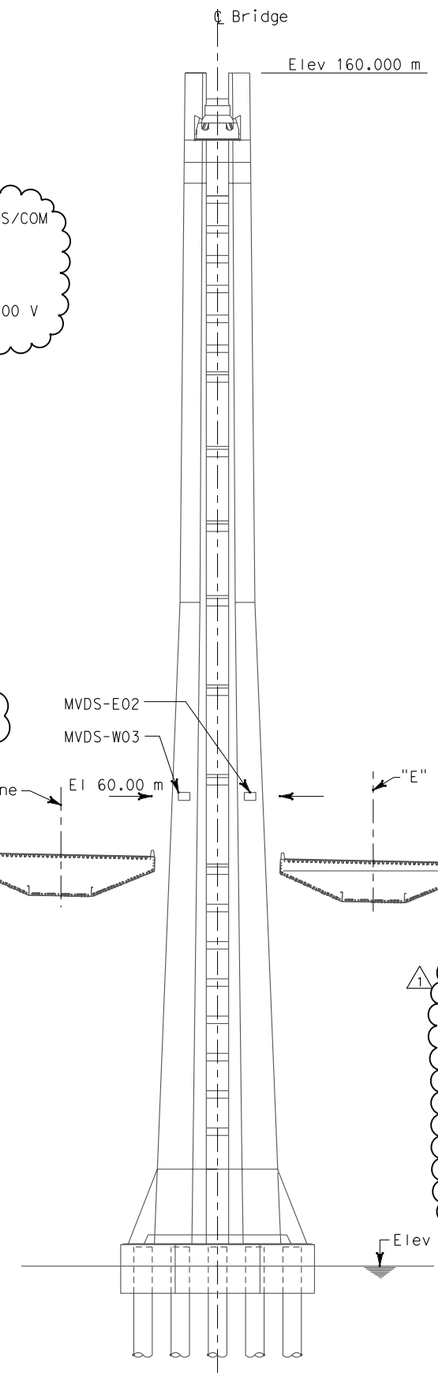

ELEVATION

NO SCALE

SHEET NOTES:

(1) For conduit routing to MVDS units. See elevation on this sheet and sheet E-345.

(2) All conduits which thereafter cross the access walkways shall be raised to a level of at least 2438 above the grating to pass overhead, allowing free walkways on the remaining three quadrants of the platform. Door on north face of SE tower shaft shall remain accessible.

NOTES:

1. References:
   - For conduit and cable tray schedules, see sheets starting at E-401.
   - For vertical conduit runs support system, see sheet E-287.
2. For Section B-B, see sheet E-264A.

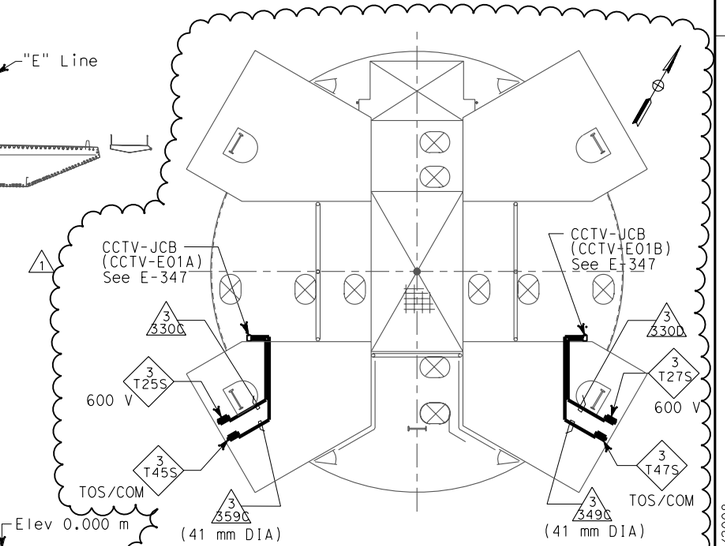

PLAN AT ACCESS PLATFORM AT ELEV 139.85 m

NO SCALE

DETAILS
TOWER AND SUSPENSION CABLE TRAFFIC OPERATIONS SYSTEM CONDUIT

NO SCALE

ALL DIMENSIONS IN MILLIMETERS UNLESS OTHERWISE SHOWN

E-281

STATE OF CALIFORNIA - DEPARTMENT OF TRANSPORTATION
Caltrans

DESIGN OVERSIGHT: BEHZAD GOLEMOHAMMADI

CALCULATED/DESIGNED BY: MD — CHECKED BY: PBF

DATE 11/01 — REVISED BY: 12/01 — DATE REVISED

LAST REVISION 00-00-00 — DATE PLOTTED => 5/9/2008 — TIME PLOTTED => 2:24:46 PM

FOR REDUCED PLANS ORIGINAL SCALE IS IN MILLIMETERS: 0 20 40 60 80

DGN FILE =>T:\13103\MS\pse\SAS Struc\CCO\SAS CCO42\04-0120f1_0284R01.dgn
USERNAME =>llorico

CU 04251 — EA 0120F1

DIST	COUNTY	ROUTE	KILOMETER POST TOTAL PROJECT	SHEET No	TOTAL SHEETS
04	SF	80	13.2/13.9	288R1	1204

Caltrans Metric

12/19/02
REGISTERED ELECTRICAL ENGINEER DATE

12-6-04
PLANS APPROVAL DATE

REGISTERED PROFESSIONAL ENGINEER JENS ERLINGSSON No. 8249 Exp. 9/30/06 ELECTRICAL STATE OF CALIFORNIA

PB POWER, Inc.
A Parsons Brinckerhoff Company
303 Second St., Suite 700N
San Francisco, CA 94107-1317

The State of California or its officers or agents shall not be responsible for the accuracy or completeness of electronic copies of this plan sheet.

Caltrans now has a web site! To get to the web site, go to http://www.dot.ca.gov

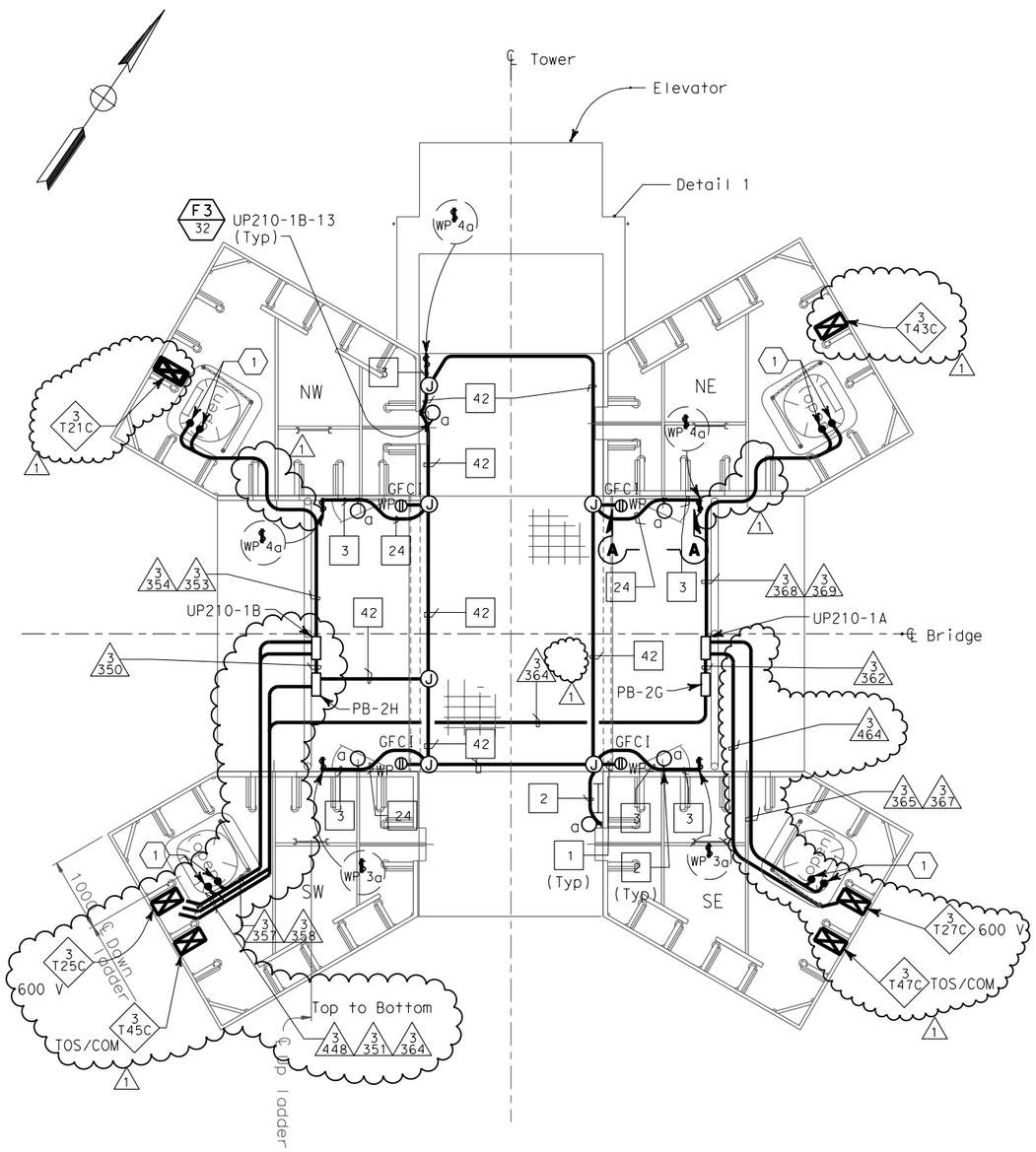

PLAN AT ELEVATION 89.85 m

SCALE: 1:40

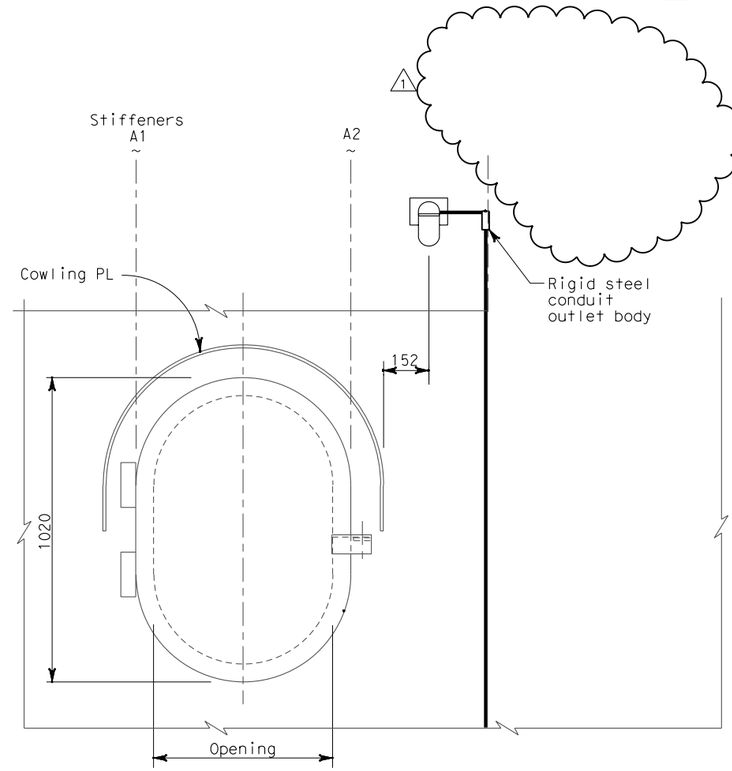

SECTION A-A
ACCESS OPENING DOOR

NO SCALE

SHEET NOTES:

(1) For tower shaft ladder and platform lighting and power layout, see section B-B on sheet E-284.

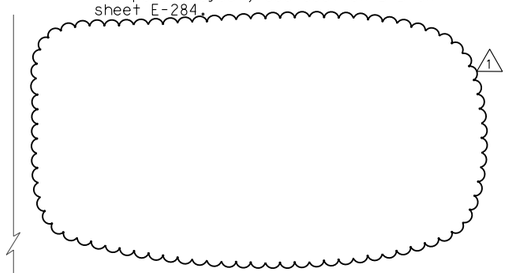

NOTES:

1. References:
   - For typical conduit installation details, see sheet E-268.
   - For utility panel UP-210-1A and UP-210-1B panel schedules, see sheets E-279 and E-280.
   - For types of pull boxes, splice boxes and enclosures, see sheets E-83 and E-169.
   - For conduit and cable tray schedules, see sheets starting at E-401.
   - For lighting installation details, see sheet E-267.
   - For lighting fixture schedule, see sheet E-273.
   - For vertical conduit runs supports system, see sheet E-287.
2. All conduits and fittings routed exposed at grating shall be rigid galvanized steel, PVC coated.
3. Fixture mounting height elevation shall be 2.125 m above floor/platform elevation UNO.
4. Electrical conduits shall enter the tower shafts between stiffeners A3 and A4 only. For conduit entry details, see Structural Utility drawings.
5. For other related work not shown on this sheet, see Electrical Special Provisions.

REGISTERED PROFESSIONAL ENGINEER MARNELL FUMIO TAKAKI No. E 8651 Exp. 9/30/2008 ELECTRICAL STATE OF CALIFORNIA

FOR REVISION ONLY

REQUEST FOR INFORMATION NOT ADDRESSED IN THIS CCO REMAIN IN FORCE

MARK	DATE	DESCRIPTIONS	BY	CH'D	CCO#
1	02/19/08	ELECTRICAL MODIFICATIONS	MP EL	RR	42

REVISIONS

CONTRACT CHANGE ORDER NO. _____
SHEET _____ OF _____

DETAILS
TOWER AND SUSPENSION CABLE
TOWER POWER AND LIGHTING

AS NOTED

E-285

THIS PLAN ACCURATE FOR ELECTRICAL WORK ONLY.

ALL DIMENSIONS ARE IN MILLIMETERS UNLESS OTHERWISE SHOWN

REVISED BY	DATE REVISED

CALCULATED/DESIGNED BY	FK	DATE 10/01
CHECKED BY	EDC	11/01

DESIGN OVERSIGHT
BEHZAD GOLEMOHAMMADI

STATE OF CALIFORNIA - DEPARTMENT OF TRANSPORTATION
Caltrans

LAST REVISION 00-00-00
DATE PLOTTED => 4/4/2008
TIME PLOTTED => 4:59:29 PM

FOR REDUCED PLANS ORIGINAL SCALE IS IN MILLIMETERS 0 20 40 60 80

DGN FILE =>T:\13103\MS\pse\SAS Struc\CCO\SAS CCO42\04-0120f1_0288R01.dgn
USERNAME =>llorico

CU 04251

EA 0120F1

DIST	COUNTY	ROUTE	KILOMETER POST TOTAL PROJECT	SHEET No	TOTAL SHEETS
04	SF	80	13.2/13.9	289R1	1204

REGISTERED ELECTRICAL ENGINEER 12/19/02 DATE

12-6-04
PLANS APPROVAL DATE

REGISTERED PROFESSIONAL ENGINEER JENS ERLINGSSON No. 8249 Exp. 9/30/06 ELECTRICAL STATE OF CALIFORNIA

PB POWER, Inc.
A Parsons Brinckerhoff Company
303 Second St., Suite 700N
San Francisco, CA 94107-1317

The State of California or its officers or agents shall not be responsible for the accuracy or completeness of electronic copies of this plan sheet.

Caltrans now has a web site! To get to the web site, go to http://www.dot.ca.gov

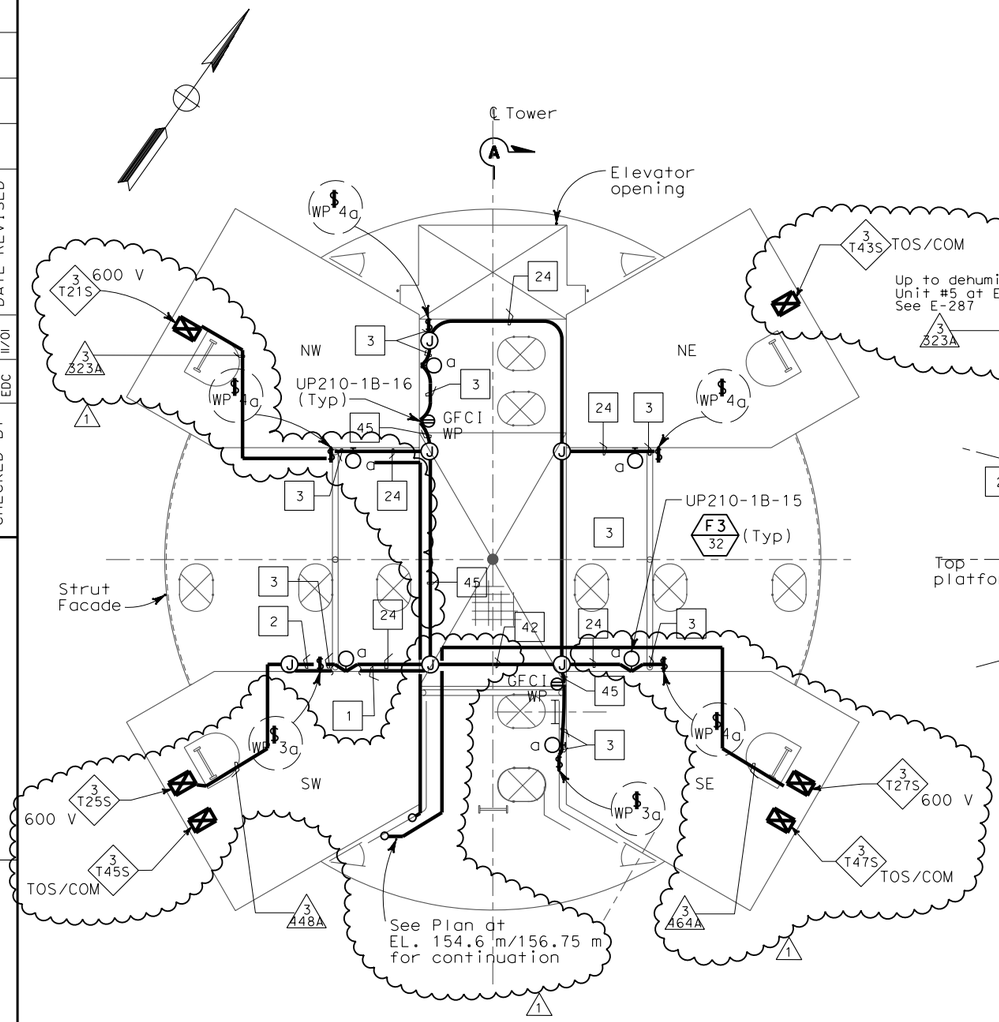

PLAN AT ELEV 139.85 m

SCALE: 1:40

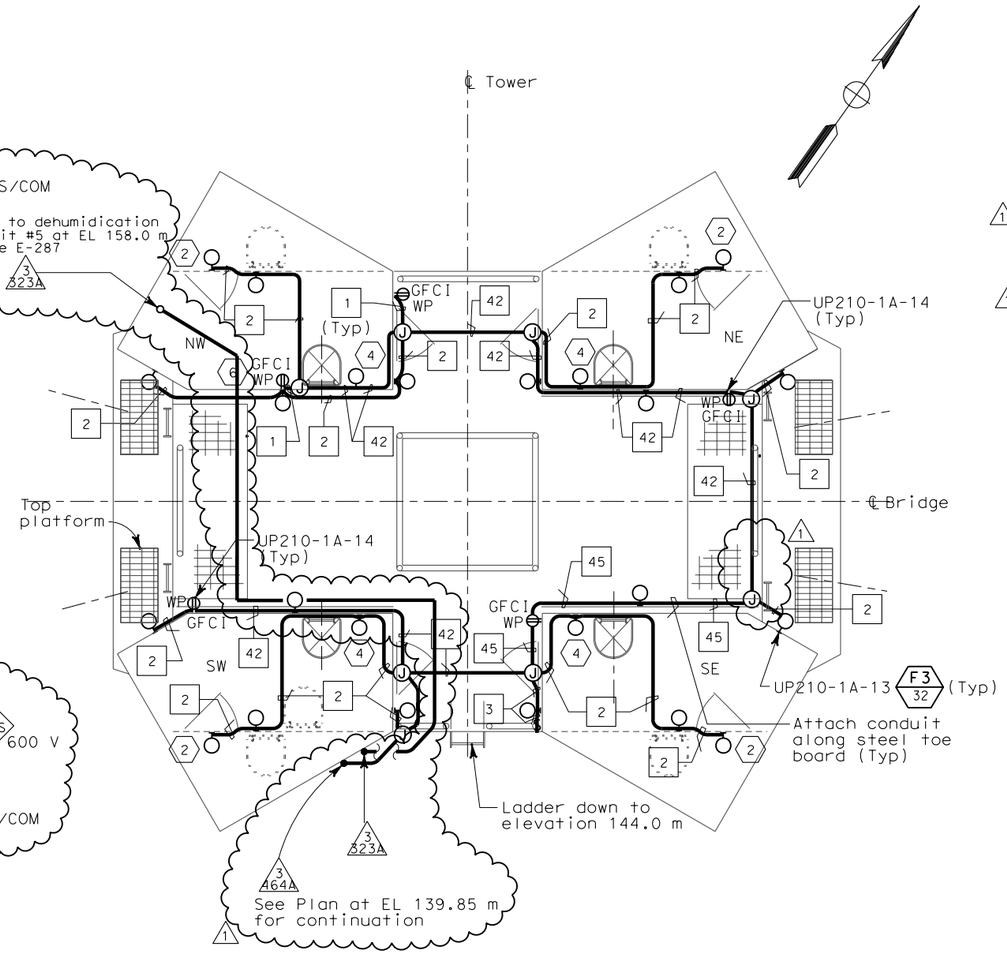

PLAN AT ELEVATIONS 154.6 m TO 156.75 m

SCALE: 1:40

SHEET NOTES:

1. Deleted.
2. Fixture mounting height elevation shall be 158.5 m.
3. Deleted.
4. Fixture mounting height elevation shall be 159.25 m.
5. Conduit from elevation 89.85 up to elevation 156.75.
6. Receptacle mounting height elevation shall be 158.450 m.

NOTES:

1. References:
   - For utility panels UP210-1A and UP210-1B, panel schedules see sheets E-279 and E-280.
   - For types of pull boxes, splice boxes and enclosures, see sheets E-83 and E-169.
   - For conduit and cable tray schedules, see sheets starting at E-401.
   - For lighting installation details, see sheet E-267.
   - For lighting fixture schedule, see sheet E-263.
   - For sections A-A and J-J, see sheet E-287.
   - For typical conduit installation details, see sheet E-268.
   - For vertical conduit runs support system, see sheet E-287.
2. All conduits and fittings routed exposed at grating shall be rigid galvanized steel, PVC coated.
3. Fixture mounting height shall be 2.125 m above floor/platform elevation UNO.
4. Electrical conduits shall enter the tower shafts between stiffeners A3 and A4 only. For conduit entry details, see Structural Utility drawings.
5. For other related work not shown on this sheet, see Electrical Special Provisions.

REGISTERED PROFESSIONAL ENGINEER MAXWELL FUMIO TAKATA No. E 8651 Exp. 9/30/2008 ELECTRICAL STATE OF CALIFORNIA

FOR REVISION ONLY

REQUEST FOR INFORMATION NOT ADDRESSED IN THIS CCO REMAIN IN FORCE

MARK	DATE	DESCRIPTIONS	BY	CH'D	CCO#
1	02/19/08	ELECTRICAL MODIFICATIONS	MP EL	RR	42

REVISIONS

CONTRACT CHANGE ORDER NO._____
SHEET _____ OF _____

DETAILS
TOWER AND SUSPENSION CABLE TOWER POWER AND LIGHTING

SCALE 1:50

E-286

THIS PLAN ACCURATE FOR ELECTRICAL WORK ONLY.

ALL DIMENSIONS ARE IN MILLIMETERS UNLESS OTHERWISE SHOWN

FOR REDUCED PLANS ORIGINAL SCALE IS IN MILLIMETERS 0 20 40 60 80

DGN FILE =>T:\13103\MS\pse\SAS Struc\CCO\SAS CC042\04-0120f1_0289R01.dgn
USERNAME =>llorico

CU 04251 | EA 0120F1

DATE PLOTTED => 4/4/2008
TIME PLOTTED => 4:59:45 PM

LAST REVISION 00-00-00

STATE OF CALIFORNIA - DEPARTMENT OF TRANSPORTATION
Caltrans

DESIGN OVERSIGHT
BEHZAD GOLEMOHAMMADI

CALCULATED/DESIGNED BY FK DATE 10/01 REVISED BY
CHECKED BY EDC 11/01 DATE REVISED

DIST	COUNTY	ROUTE	KILOMETER POST TOTAL PROJECT	SHEET No	TOTAL SHEETS
04	SF	80	13.2/13.9	290R1	1204

REGISTERED ELECTRICAL ENGINEER 12/19/02 DATE

12-6-04
PLANS APPROVAL DATE

REGISTERED PROFESSIONAL ENGINEER JENS ERLINGSSON No. 8249 Exp. 9/30/06 ELECTRICAL STATE OF CALIFORNIA

PB POWER, Inc.
A Parsons Brinckerhoff Company
303 Second St., Suite 700N
San Francisco, CA 94107-1317

The State of California or its officers or agents shall not be responsible for the accuracy or completeness of electronic copies of this plan sheet.

Caltrans now has a web site! To get to the web site, go to http://www.dot.ca.gov

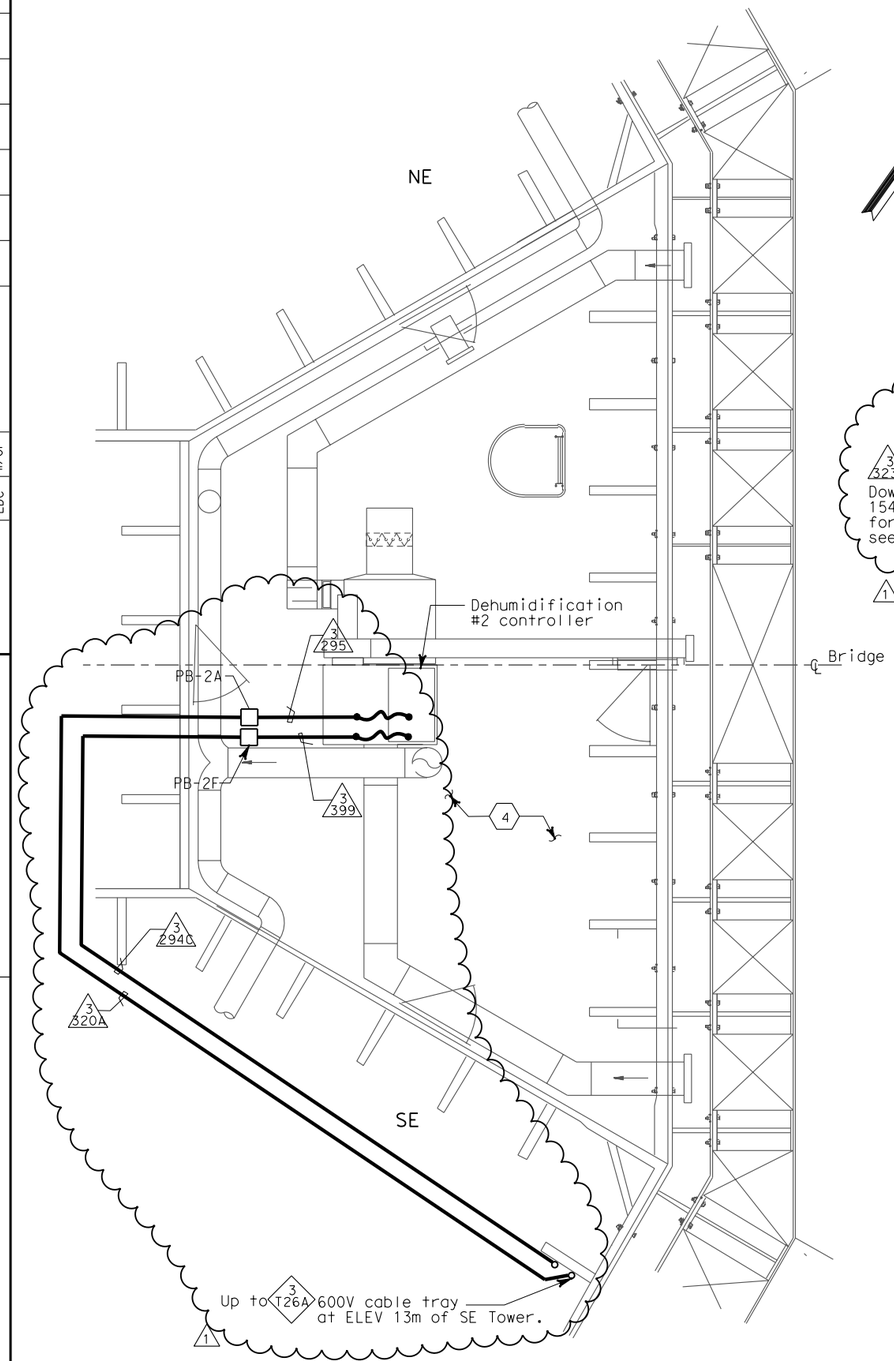

DEHUMIDIFICATION UNIT #2 PLAN- AT ELEV. 9.0 m

NO SCALE

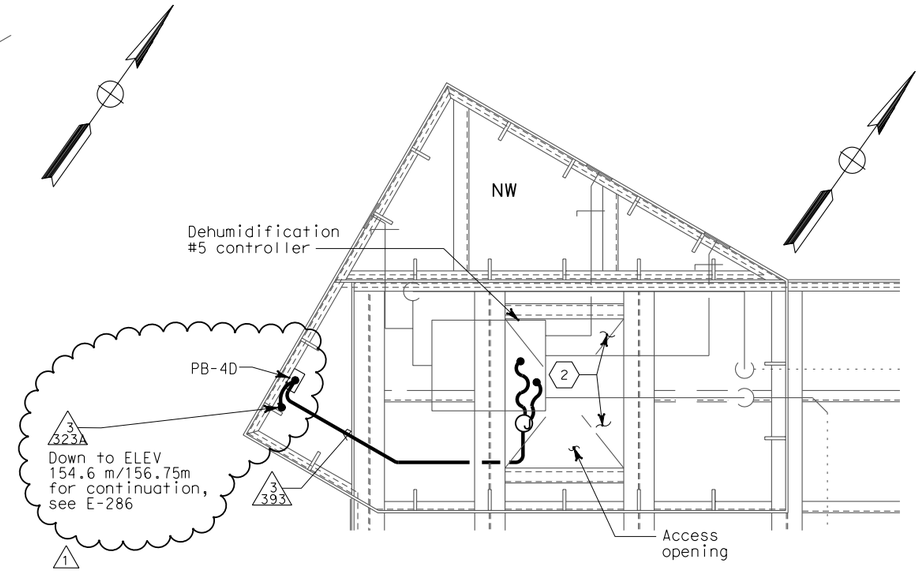

DEHUMIDIFICATION UNIT #5 PLAN- AT ELEV. 158.0 m

SCALE: 1:20

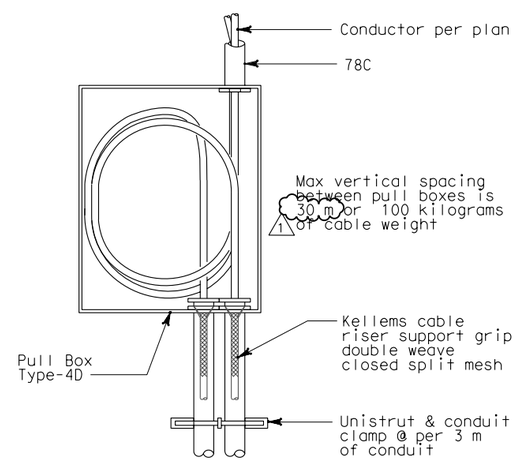

CABLE AND CONDUIT SUPPORT SYSTEM FOR VERTICAL CABLE RUNS

SCALE: 1:10

SHEET NOTES:

1. Deleted.
2. For lighting and receptacles in this area, see plan at elevations 154.6 m to 156.75 m on sheet E-268.
3. Deleted.
4. For lighting and receptacles in this area, see sheet E-266.

1

NOTES:

1. References:
   - For types of pull boxes, splice boxes and enclosures, see sheets E-83 and E-169.
   - For conduit and cable tray schedules, see sheets starting at E-401.
   - For typical conduit installation details, see sheet E-268.
2. For other related work not shown on this sheet, see Electrical Special Provisions.

REGISTERED PROFESSIONAL ENGINEER MAXWELL FUMIO TAKAKI No. E 8651 Exp. 9/30/2008 ELECTRICAL STATE OF CALIFORNIA

FOR REVISION ONLY

REQUEST FOR INFORMATION NOT ADDRESSED IN THIS CCO REMAIN IN FORCE

MARK	DATE	DESCRIPTIONS	BY	CH'D	CCO#
1	02/19/08	ELECTRICAL MODIFICATIONS	MP EL	RR	42

REVISIONS

CONTRACT CHANGE ORDER NO._____
SHEET _____ OF _____

DETAILS
TOWER AND SUSPENSION CABLE TOWER POWER AND LIGHTING

SCALE AS NOTED

E-287

CALCULATED/ DESIGNED BY	FK	DATE 10/01	REVISED BY
CHECKED BY	EDC	11/01	DATE REVISED

DESIGN OVERSIGHT
BEHZAD GOLEMOHAMMADI

STATE OF CALIFORNIA - DEPARTMENT OF TRANSPORTATION
Caltrans

LAST REVISION 00-00-00
DATE PLOTTED => 5/9/2008
TIME PLOTTED => 2:25:12 PM

FOR REDUCED PLANS ORIGINAL SCALE IS IN MILLIMETERS 0 20 40 60 80

DGN FILE =>T:\13103\MS\pse\SAS Struc\CCO\SAS CCO42\04-0120f1_0290R01.dgn
USERNAME =>llorico

CU 04251 EA 0120F1

DIST	COUNTY	ROUTE	KILOMETER POST TOTAL PROJECT	SHEET No	TOTAL SHEETS
04	SF	80	13.2/13.9	333R1	1204

REGISTERED ELECTRICAL ENGINEER 12/19/02 DATE

12-6-04
PLANS APPROVAL DATE

REGISTERED PROFESSIONAL ENGINEER JENS ERLINGSSON No. 8249 Exp. 9/30/06 ELECTRICAL STATE OF CALIFORNIA

PB POWER, Inc.
A Parsons Brinckerhoff Company
303 Second St., Suite 700N
San Francisco, CA 94107-1317

The State of California or its officers or agents shall not be responsible for the accuracy or completeness of electronic copies of this plan sheet.

Caltrans now has a web site! To get to the web site, go to http://www.dot.ca.gov

Caltrans Metric

NOTES:

1. For other related work not shown on this drawing, see Electrical Special Provisions.
2. References:
   - For sensors and recorder schedules, see sheets E-379, E-380 and E-381.
   - For cable block diagram, see sheets E-383 and E-384.
   - For general notes of the strong motion detection system, see sheet E-361.
   - For circuit and conduit / cable tray Schedules, see sheets starting at E-401.
3. All conduits and fittings located outside or inside pier shall be rigid galvanized steel, PVC coated.

SHEET NOTES:

(1) Sensors mounted on suspension cables refer to sheet E-377.

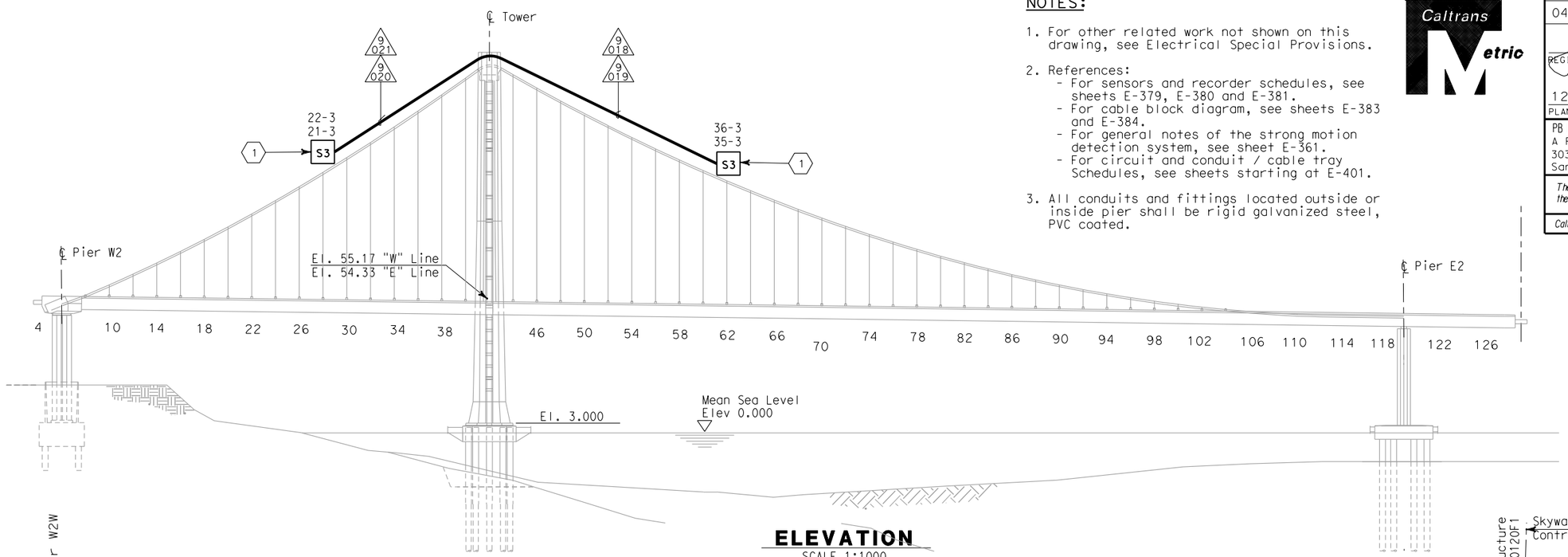

ELEVATION
SCALE 1:1000

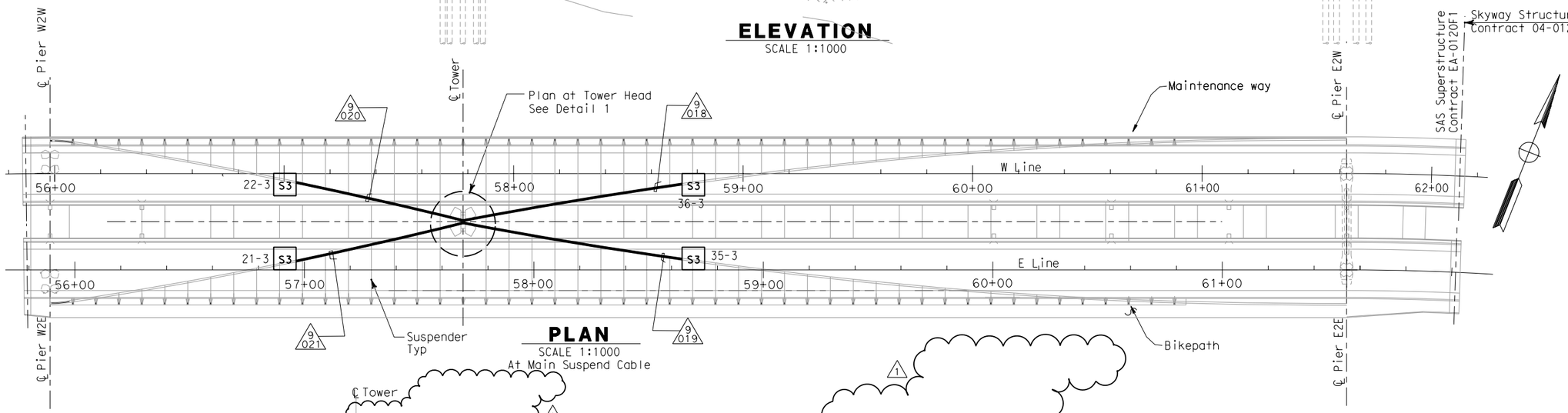

PLAN
SCALE 1:1000
At Main Suspend Cable

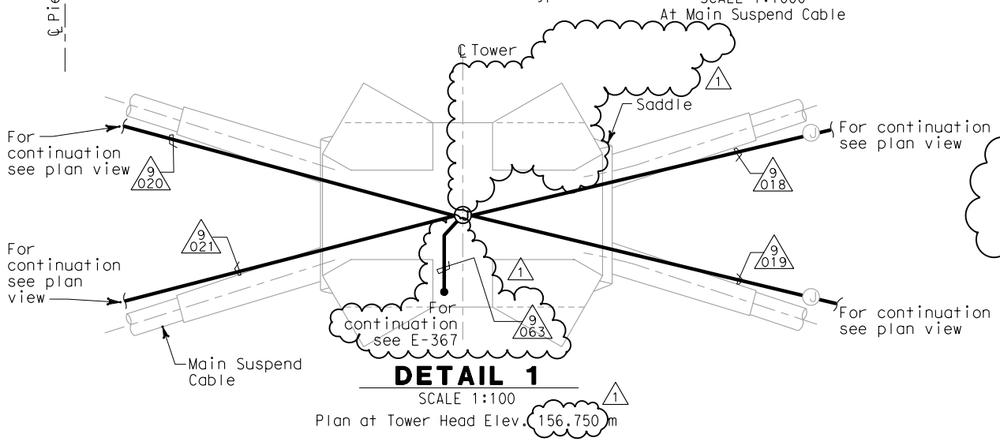

DETAIL 1
SCALE 1:100
Plan at Tower Head Elev. 156.750 m

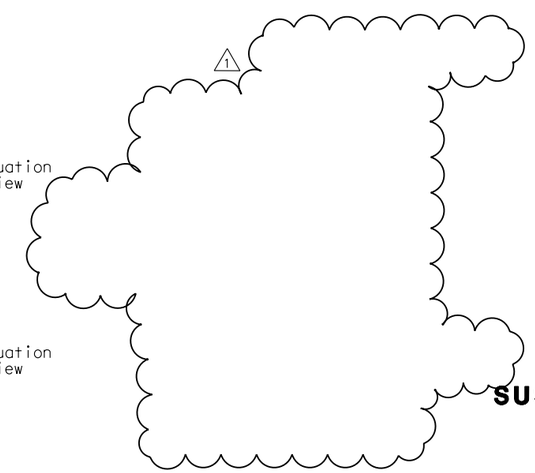

REQUEST FOR INFORMATION NOT ADDRESSED IN THIS CCO REMAIN IN FORCE					
1	02/19/08	ELECTRICAL MODIFICATIONS	MP EL	RR	42
MARK	DATE	DESCRIPTIONS	BY	CH'D	CCO#
REVISIONS					

CONTRACT CHANGE ORDER NO._____
SHEET _____ OF _____

REGISTERED PROFESSIONAL ENGINEER MARNELL FUMIO TAKAKI No. E 8651 Exp. 9/30/2008 ELECTRICAL STATE OF CALIFORNIA

FOR REVISION ONLY

STRONG MOTION DETECTION SYSTEM
SAS SUPERSTRUCTURE
SUSPENSION CABLE CONDUIT AND SENSOR LOCATION

SCALE AS NOTED

E-365

STATE OF CALIFORNIA - DEPARTMENT OF TRANSPORTATION
Caltrans

DESIGN OVERSIGHT
BEHZAD GOLEMOHAMMADI

CALCULATED/DESIGNED BY
CHECKED BY

DATE | REVISED BY | DATE REVISED

LAST REVISION 00-00-00
DATE PLOTTED => 4/4/2008
TIME PLOTTED => 5:00:50 PM

FOR REDUCED PLANS ORIGINAL SCALE IS IN MILLIMETERS 0 20 40 60 80

DGN FILE =>T:\13103\MS\pse\SAS Struc\CCO\SAS CCO42\04-0120f1_0333R01.dgn
USERNAME =>llorico

CU 04251

EA 0120F1

DIST	COUNTY	ROUTE	KILOMETER POST TOTAL PROJECT	SHEET No	TOTAL SHEETS
04	SF	80	13.2/13.9	334R1	1204

REGISTERED ELECTRICAL ENGINEER 12/19/02 DATE

12-6-04
PLANS APPROVAL DATE

REGISTERED PROFESSIONAL ENGINEER JENS ERLINGSSON No. 8249 Exp. 9/30/06 ELECTRICAL STATE OF CALIFORNIA

PB POWER, Inc.
A Parsons Brinckerhoff Company
303 Second St., Suite 700N
San Francisco, CA 94107-1317

The State of California or its officers or agents shall not be responsible for the accuracy or completeness of electronic copies of this plan sheet.

Caltrans now has a web site! To get to the web site, go to: http://www.dot.ca.gov

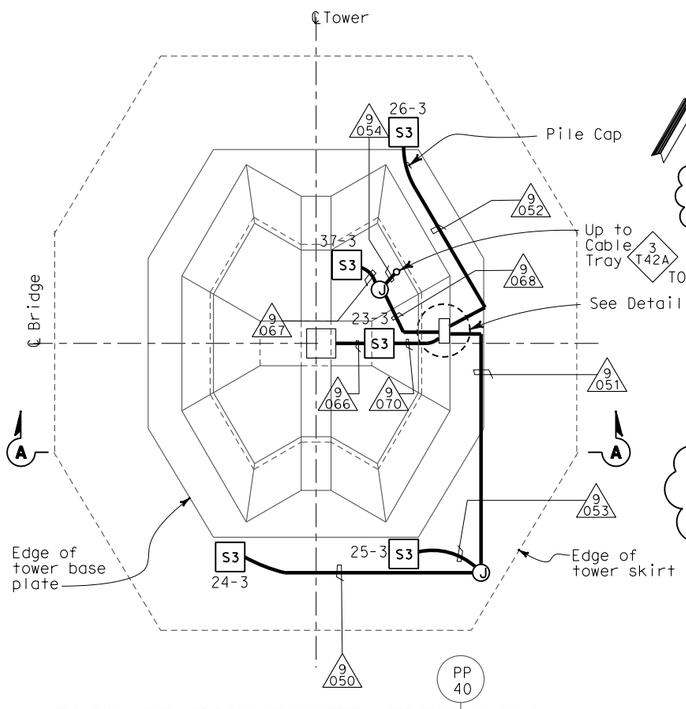

PLAN AT MAIN TOWER, ELEV 3.000 m

SCALE 1:200

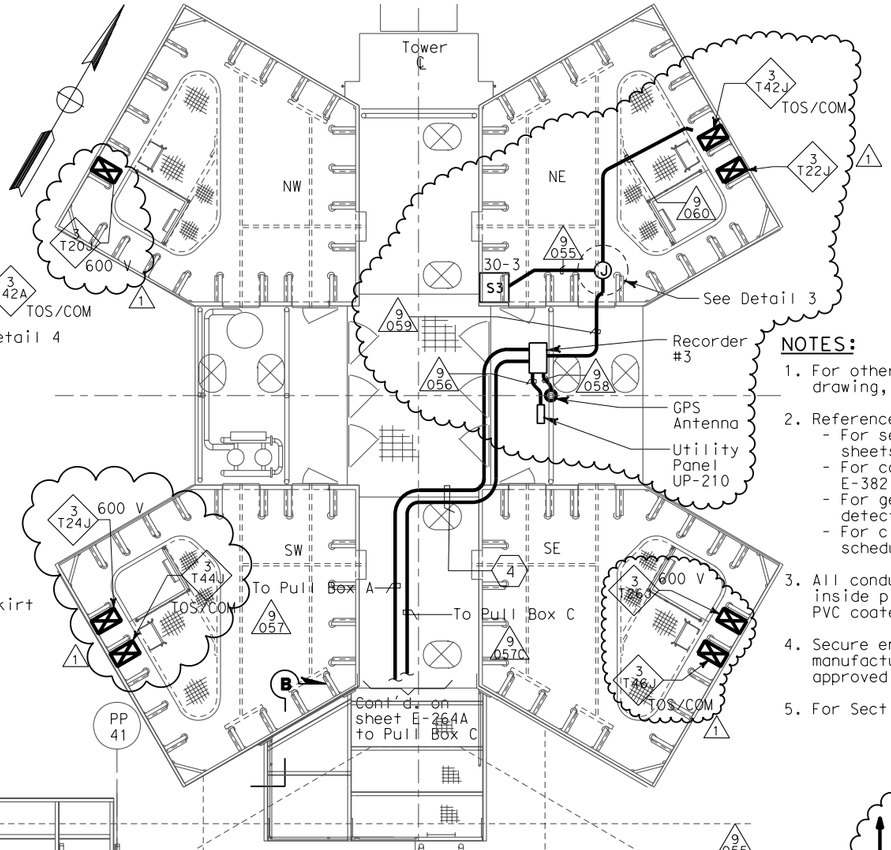

NOTES:

1. For other related work not shown on this drawing, see Electrical Special Provisions.
2. References:
   - For sensors and recorder schedules. see sheets E-379, E-380 and E-381.
   - For cable block diagram, see sheets E-382, E-383 and E-384.
   - For general notes on the strong motion detection system, see sheet E-361.
   - For circuit and conduit/cable tray schedules, see sheets starting at E-401.
3. All conduits and fittings located outside or inside pier shall be rigid galvanized steel, PVC coated.
4. Secure enclosure to concrete wall with manufacturer's recommended mounting and as approved by the Engineer.
5. For Section B-B, see sheet E-264A.

SHEET NOTES:

1. Pipe sleeves shall be provided with watertight seals after conduits are installed. Spare sleeves shall be capped and plugged.
2. Downhole sensor cables will be furnished and installed by CDMG.
3. For nameplate engraving, see nameplate Schedule on sheet E-379.
4. All conduits which thereafter cross the access walkways shall be raised to a level of at least 2438 above the grating to pass overhead, allowing free walkways on the remaining three quadrants of the platform. Door on north face of SE tower shaft shall remain accessible..
5. Remove Downhole Enclosure and re-install on top of the base plate.

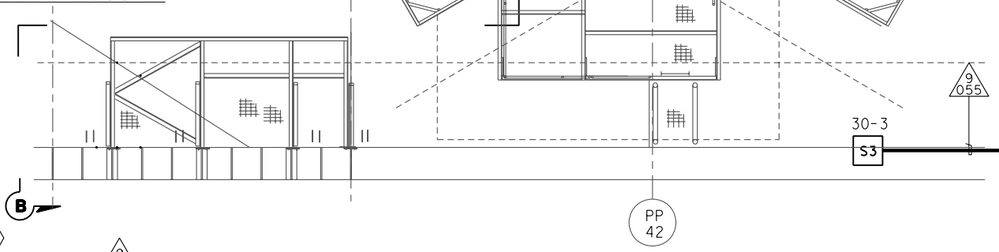

PLAN AT MAIN TOWER, ELEV 53.85 m

SCALE 1:50

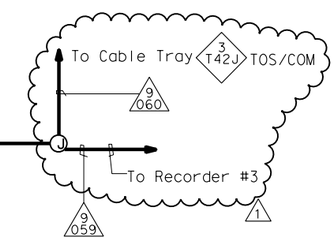

DETAIL 3

NO SCALE

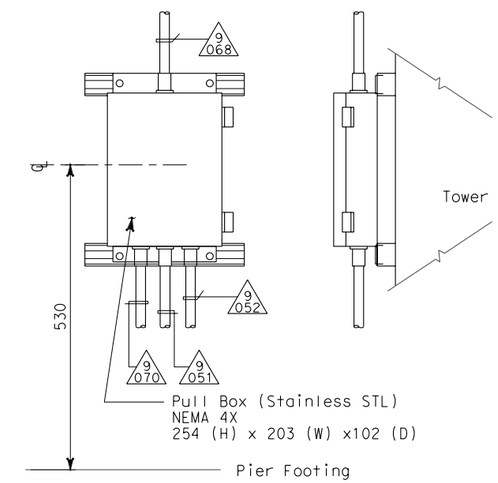

DETAIL 4

NO SCALE

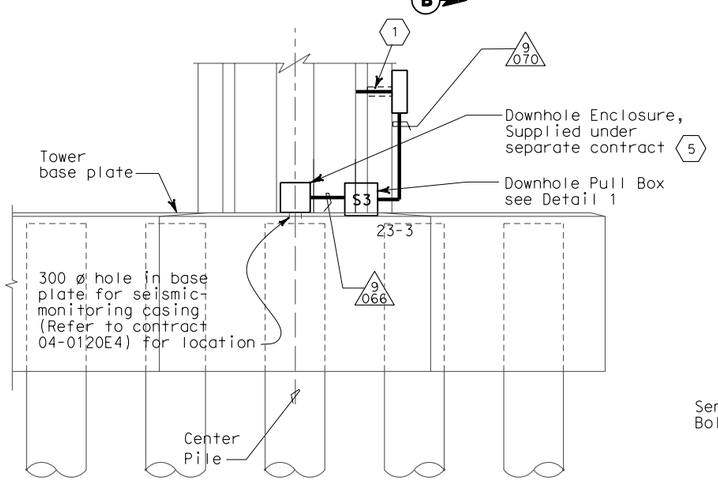

SECTION A-A

SCALE 1:100

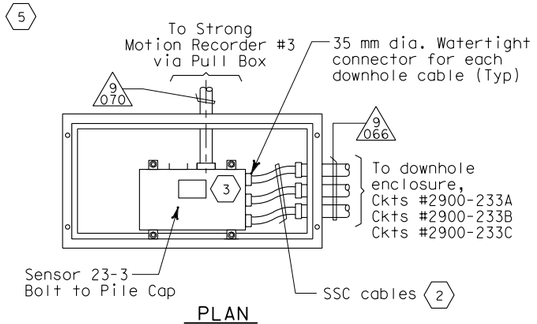

PLAN

DETAIL 1

DOWNHOLE PULL BOX
(SCALE 1:10)

REGISTERED PROFESSIONAL ENGINEER MAXWELL FUMIO TAKAKI No. E 8651 Exp. 9/30/2008 ELECTRICAL STATE OF CALIFORNIA

FOR REVISION ONLY

REQUEST FOR INFORMATION NOT ADDRESSED IN THIS CCO REMAIN IN FORCE

MARK	DATE	DESCRIPTIONS	BY	CH'D	CCO#
1	02/19/08	ELECTRICAL MODIFICATIONS	MP EL	RR	42

REVISIONS

CONTRACT CHANGE ORDER NO._____
SHEET _____ OF _____

STRONG MOTION DETECTION SYSTEM
SAS SUPERSTRUCTURE
TOWER PLATFORM CONDUIT AND SENSOR LOCATION

SCALE AS NOTED

E-366

THIS PLAN IS ACCURATE FOR ELECTRICAL WORK ONLY.

ALL DIMENSIONS ARE IN MILLIMETERS UNLESS OTHERWISE SHOWN.

DESIGN OVERSIGHT	BEHZAD GOLEMOHAMMADI	CALCULATED/DESIGNED BY	EDC
		CHECKED BY	KG
REVISED BY	DATE REVISED	DATE	AB
		10/01	2/04

STATE OF CALIFORNIA - DEPARTMENT OF TRANSPORTATION

Caltrans

FOR REDUCED PLANS ORIGINAL SCALE IS IN MILLIMETERS 0 20 40 60 80

DGN FILE =>T:\13103\MS\pse\SAS Struc\CCO\SAS CCO42\04-0120f1_0334R01.dgn
USERNAME =>llorico

CU 04251

EA 0120F1

LAST REVISION 00-00-00

DATE PLOTTED => 4/4/2008
TIME PLOTTED => 5:01:16 PM

DIST	COUNTY	ROUTE	KILOMETER POST TOTAL PROJECT	SHEET No	TOTAL SHEETS
04	SF	80	13.2/13.9	335R1	1204

REGISTERED ELECTRICAL ENGINEER 12/19/02 DATE

12-6-04
PLANS APPROVAL DATE

REGISTERED PROFESSIONAL ENGINEER JENS ERLINGSSON No. 8249 Exp. 9/30/06 ELECTRICAL STATE OF CALIFORNIA

PB POWER, Inc.
A Parsons Brinckerhoff Company
303 Second St., Suite 700N
San Francisco, CA 94107-1317

The State of California or its officers or agents shall not be responsible for the accuracy or completeness of electronic copies of this plan sheet.

Caltrans now has a web site! To get to the web site, go to: http://www.dot.ca.gov

Caltrans Metric

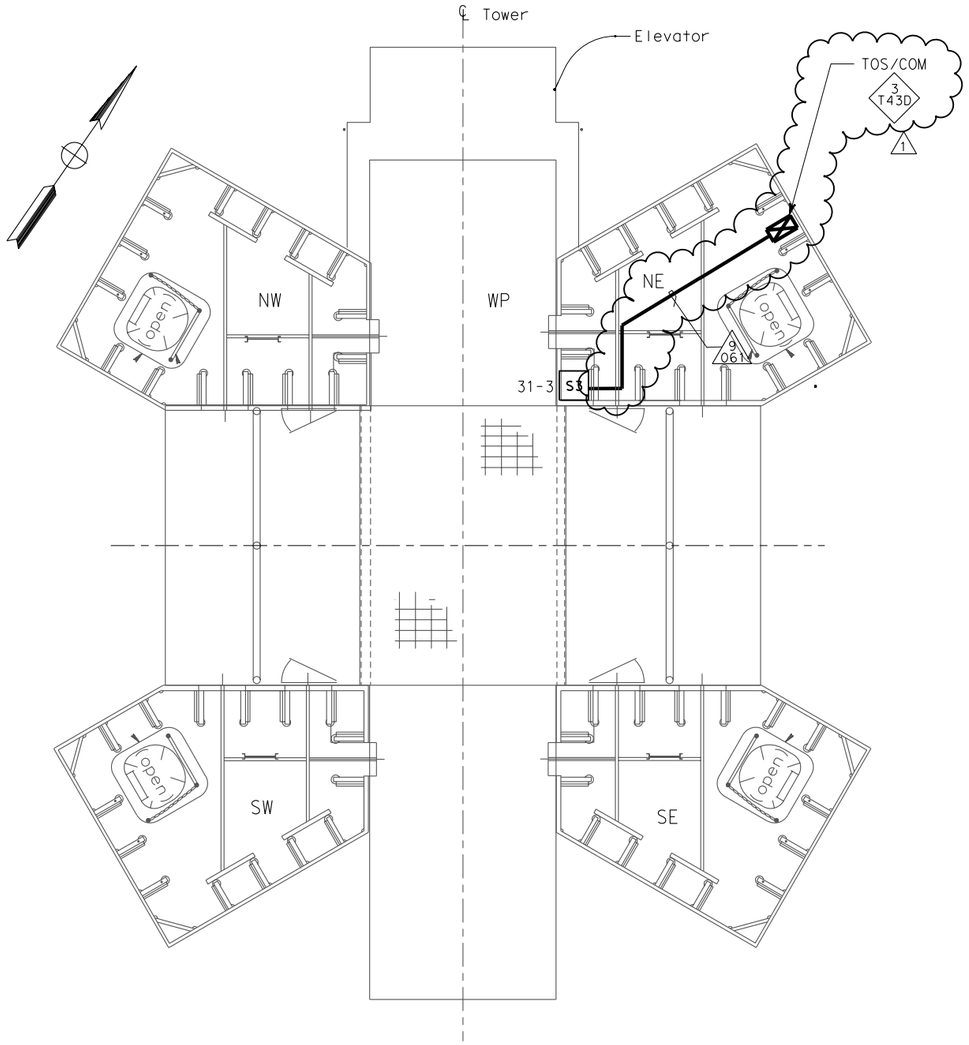

TOWER PLATFORM CONDUIT AND SENSOR LAYOUT
ELEV 93.350 m
SCALE 1:40

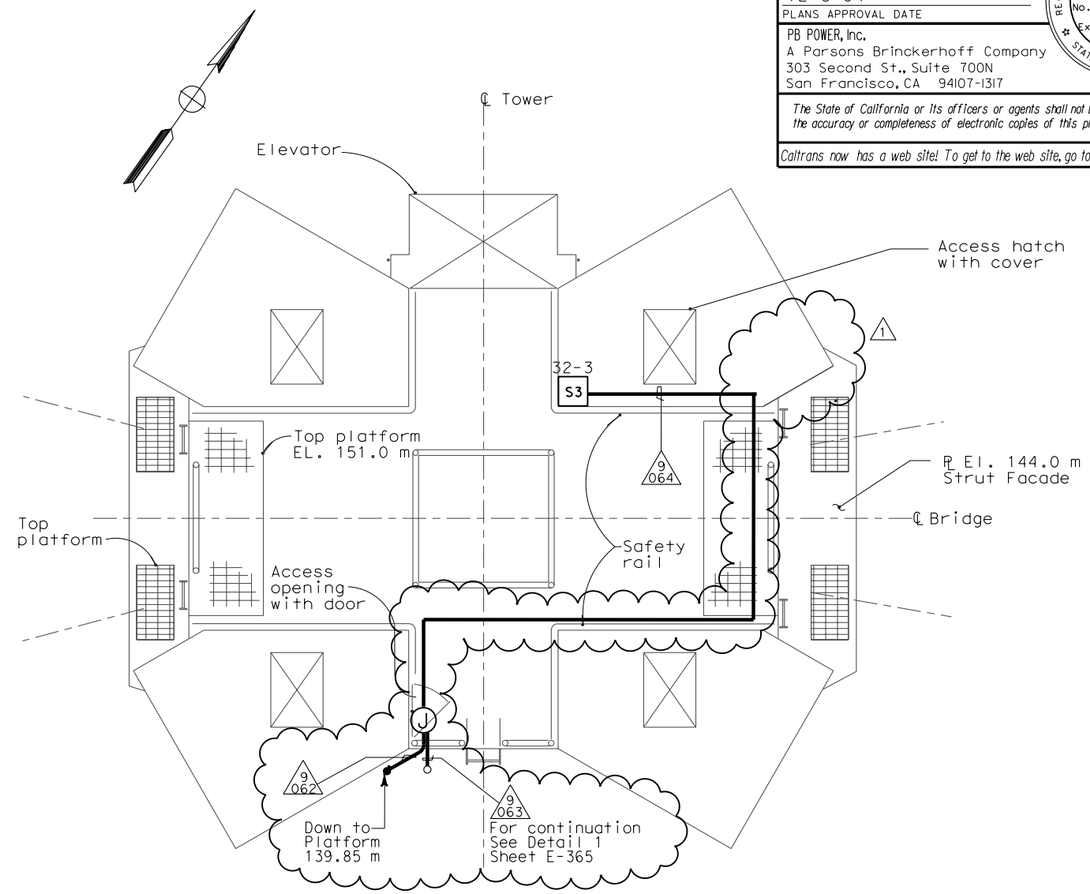

TOWER PLATFORM CONDUIT AND SENSOR LAYOUT
ELEV 151.0 M
SCALE 1:40

REGISTERED PROFESSIONAL ENGINEER MAXWELL FUMIO TAKAKI No. E 8651 Exp. 9/30/2008 ELECTRICAL STATE OF CALIFORNIA

FOR REVISION ONLY

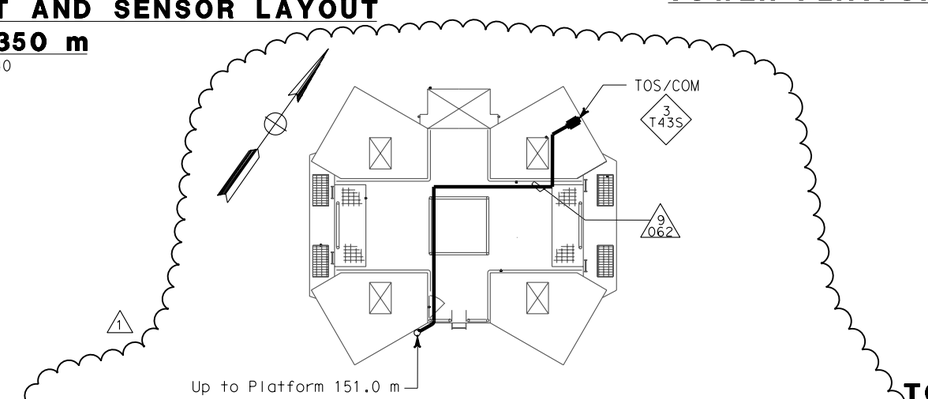

TOWER PLATFORM CONDUIT AND SENSOR LAYOUT
ELEV 139.85 M

NOTES:

1. For other related work not shown on this drawing, see Electrical Special Provisions.
2. References:
   - For sensors and recorder schedules, see sheets E-379, E-380 and E-381.
   - For cable block diagram, see sheets E-382, E-383 and E-384.
   - For general notes of the strong motion detection system, see sheet E-361.
   - For circuit and conduit/cable tray schedules, see sheets starting at E-401.

STRONG MOTION DETECTION SYSTEM
SAS SUPERSTRUCTURE
TOWER PLATFORM CONDUIT AND SENSOR LOCATION
SCALE AS NOTED

REQUEST FOR INFORMATION NOT ADDRESSED IN THIS CCO REMAIN IN FORCE

MARK	DATE	DESCRIPTIONS	BY	CH'D	CCO#
1	02/19/08	ELECTRICAL MODIFICATIONS	MP EL	RR	42

REVISIONS

CONTRACT CHANGE ORDER NO._____
SHEET _____ OF _____

THIS PLAN ACCURATE FOR ELECTRICAL WORK ONLY.

ALL DIMENSIONS ARE IN MILLIMETERS UNLESS OTHERWISE SHOWN.

E-367

CALCULATED/DESIGNED BY	FK
CHECKED BY	EDC
REVISED BY	DATE 10/01
DATE REVISED	11/01

DESIGN OVERSIGHT
BEHZAD GOLEMOHAMMADI

STATE OF CALIFORNIA - DEPARTMENT OF TRANSPORTATION
Caltrans

LAST REVISION 00-00-00
DATE PLOTTED => 4/4/2008
TIME PLOTTED => 5:01:35 PM

FOR REDUCED PLANS ORIGINAL SCALE IS IN MILLIMETERS 0 20 40 60 80

DGN FILE =>T:\13103\MS\pse\SAS Struc\CCO\SAS CCO42\04-0120f1_0335R01.dgn
USERNAME =>llorico

CU 04251

EA 0120F1

DIST	COUNTY	ROUTE	KILOMETER POST TOTAL PROJECT	SHEET No	TOTAL SHEETS
04	SF	80	13.2/13.9	343R1	1204

Jens Erlingsson 12/19/02
REGISTERED ELECTRICAL ENGINEER DATE

12-6-04
PLANS APPROVAL DATE

REGISTERED PROFESSIONAL ENGINEER JENS ERLINGSSON No. 8249 Exp. 9/30/06 ELECTRICAL STATE OF CALIFORNIA

PB POWER, Inc.
A Parsons Brinckerhoff Company
303 Second St., Suite 700N
San Francisco, CA 94107-1317

The State of California or its officers or agents shall not be responsible for the accuracy or completeness of electronic copies of this plan sheet.

Caltrans now has a web site! To get to the web site, go to http://www.dot.ca.gov

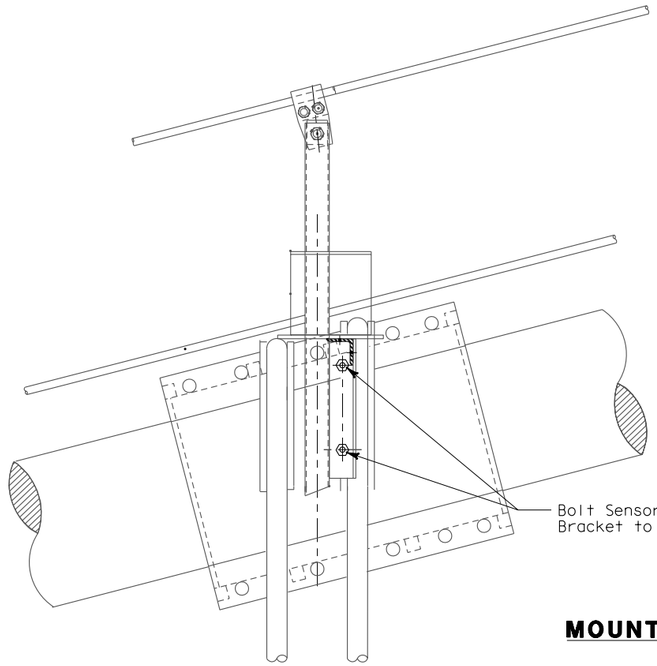

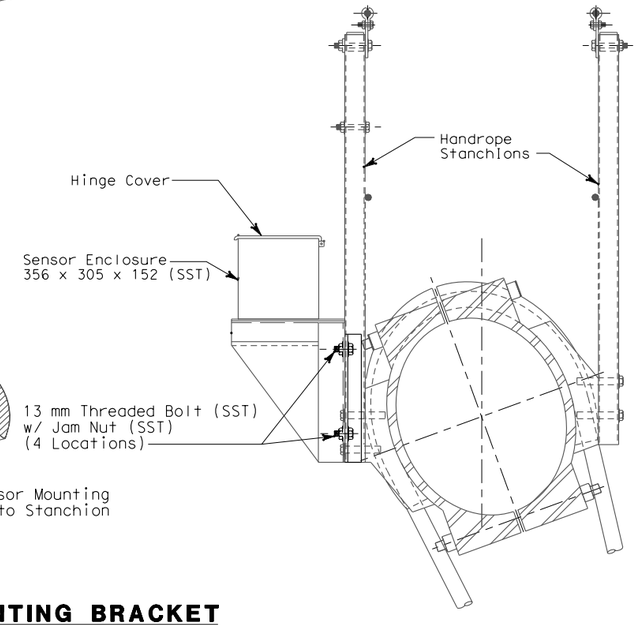

MOUNTING BRACKET
NO SCALE

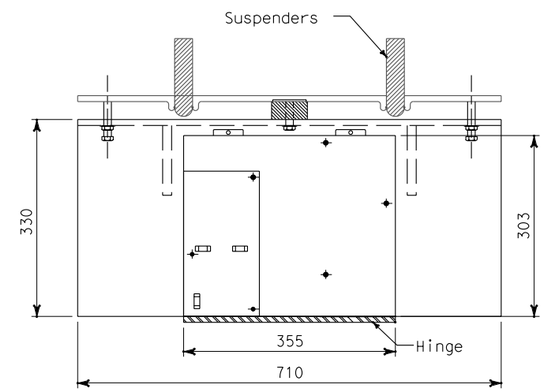

TYPE 6
SENSOR ENCLOSURE
NUMBER 21-3
STAINLESS STEEL BOX
1
NO SCALE

NOTES:

1. For other related work not shown on this drawing, see Electrical Special Provisions.
2. References:
   - For sensors and recorder schedules, see sheets E-379, E-380 and E-381.
   - For cable block diagram, see sheets E-382, E-383 and E-384.
   - For general notes of the strong motion detection system, see sheet E-361.
   - For circuit and conduit/cable tray schedules, see sheets starting at E-401.
3. All conduits and fittings located outside or inside pier shall be rigid galvanized steel, PVC coated.
4. For sensor enclosures bolt hole details, see AS-sheets.
5. For stanchion details, see Structural sheets.

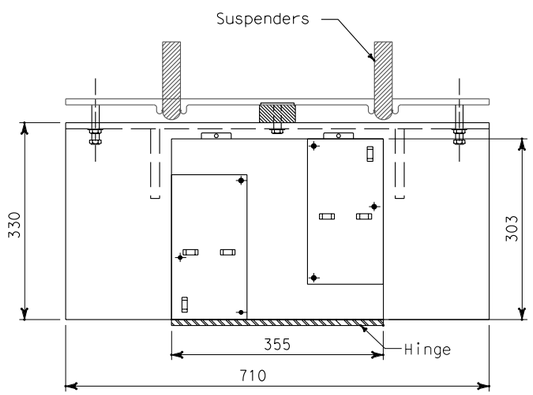

TYPE 6
SENSOR ENCLOSURE
NUMBER 35-3
STAINLESS STEEL BOX
1
NO SCALE

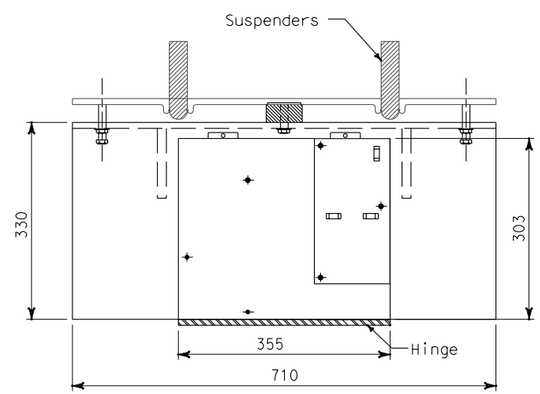

TYPE 6
SENSOR ENCLOSURE
NUMBER 22-3 & 36-3
STAINLESS STEEL BOX
1
NO SCALE

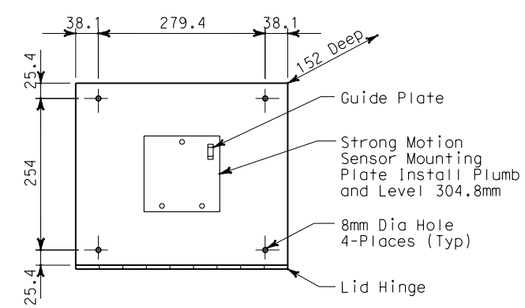

TYPE 7
SENSOR ENCLOSURE
STAINLESS STEEL BOX
1
NO SCALE

REQUEST FOR INFORMATION NOT ADDRESSED IN THIS CCO REMAIN IN FORCE					
1	02/19/08	ELECTRICAL MODIFICATIONS	MP EL	RR	42
MARK	DATE	DESCRIPTIONS	BY	CH'D	CCO#
REVISIONS					

CONTRACT CHANGE ORDER NO._____
SHEET _____ OF _____

REGISTERED PROFESSIONAL ENGINEER MANNELL FUMIO TAKAKI No. E 8651 Exp. 9/30/2008 ELECTRICAL STATE OF CALIFORNIA

FOR REVISION ONLY

DETAILS
STRONG MOTION DETECTION SYSTEM
SUSPENSION CABLE SENSOR ENCLOSURES AND MOUNTING
SCALE AS NOTED

E-377

THIS PLAN IS ACCURATE FOR ELECTRICAL WORK ONLY.

ALL DIMENSIONS ARE IN MILLIMETERS UNLESS OTHERWISE SHOWN.

CALCULATED/DESIGNED BY	EDC	DATE 10/01	REVISED BY	IAH
CHECKED BY	KG	11/01	DATE REVISED	3/04

DESIGN OVERSIGHT
BEHZAD GOLEMOHAMMADI

STATE OF CALIFORNIA - DEPARTMENT OF TRANSPORTATION
Caltrans

LAST REVISION 00-00-00
DATE PLOTTED => 4/4/2008
TIME PLOTTED => 5:01:55 PM

FOR REDUCED PLANS ORIGINAL SCALE IS IN MILLIMETERS 0 20 40 60 80

DGN FILE =>T:\13103\MS\pse\SAS Struc\CCO\SAS CCO42\04-0120f1_0343R01.dgn
USERNAME =>llorico

CU 04251

EA 0120F1

DIST	COUNTY	ROUTE	KILOMETER POST TOTAL PROJECT	SHEET No	TOTAL SHEETS
04	SF	80	13.2/13.9	344R1	1204

REGISTERED ELECTRICAL ENGINEER 12/19/02 DATE

12-6-04
PLANS APPROVAL DATE

REGISTERED PROFESSIONAL ENGINEER JENS ERLINGSSON No. 8249 Exp. 9/30/06 ELECTRICAL STATE OF CALIFORNIA

PB POWER, Inc.
A Parsons Brinckerhoff Company
303 Second St., Suite 700N
San Francisco, CA 94107-1317

The State of California or its officers or agents shall not be responsible for the accuracy or completeness of electronic copies of this plan sheet.

Caltrans now has a web site! To get to the web site, go to http://www.dot.ca.gov

Caltrans Metric

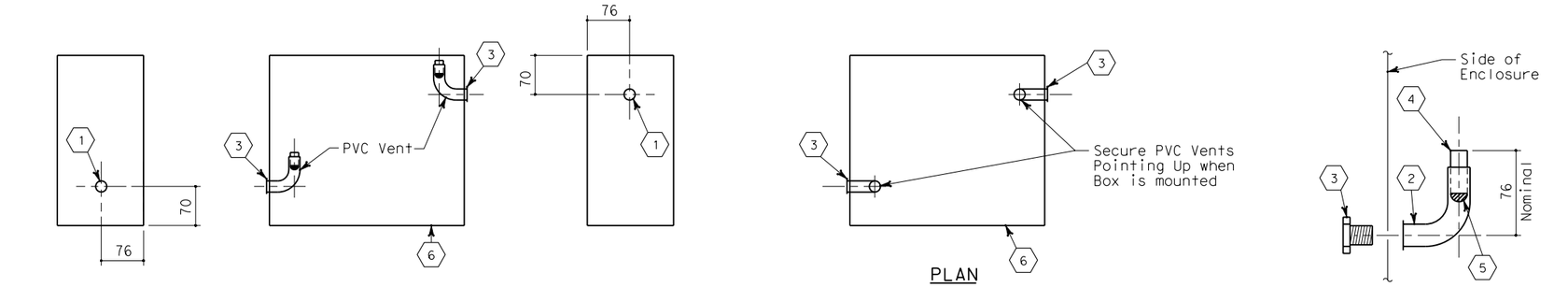

SIDE VIEW — ELEVATION — SIDE VIEW

ENCLOSURE VENTING DETAIL
VERTICAL MOUNT

PLAN

ENCLOSURE VENTING DETAIL
HORIZONTAL MOUNT

PVC VENT DETAIL

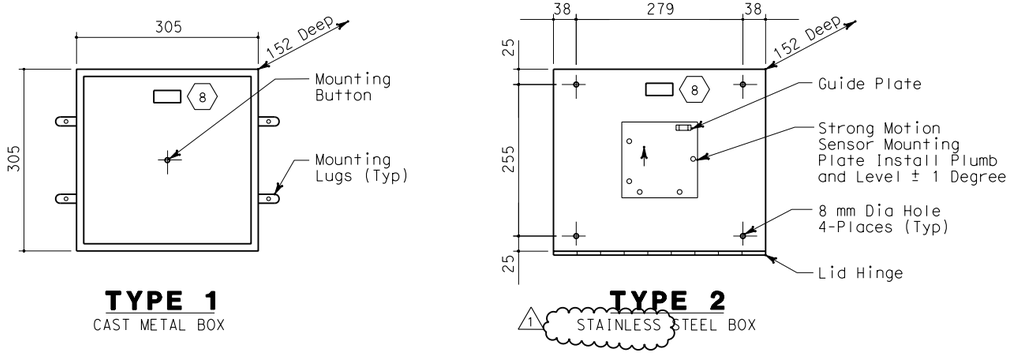

TYPE 1
CAST METAL BOX

TYPE 2
1 STAINLESS STEEL BOX

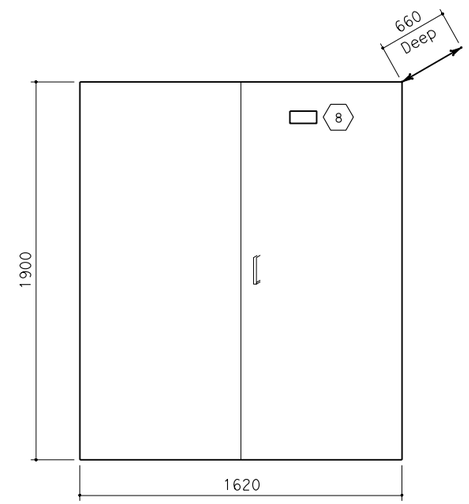

STRONG MOTION RECORDER (7)
CALTRANS TYPE S

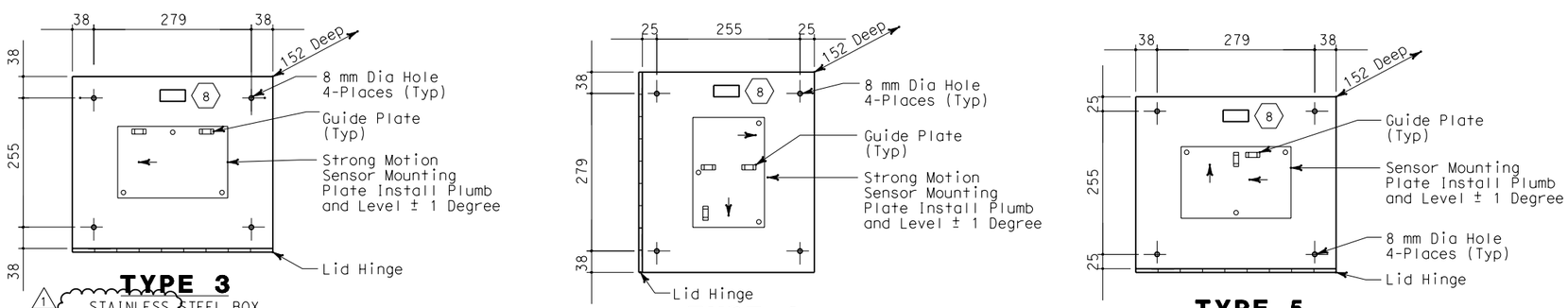

TYPE 3
1 STAINLESS STEEL BOX

TYPE 4
1 STAINLESS STEEL BOX

TYPE 5
1 STAINLESS STEEL BOX

ENCLOSURE DETAILS
FRONT VIEW

REGISTERED PROFESSIONAL ENGINEER MAXWELL FUMIO TAKAKI No. E 8651 Exp. 9/30/2008 ELECTRICAL STATE OF CALIFORNIA

FOR REVISION ONLY

SHEET NOTES:

(1) Punch hole for 27C.

(2) 27C, schedule 40 PVC, 90 °elbow (female threaded-female slip).

(3) 27 chase nipple, zinc.

(4) 27C, schedule 40 PVC. Secure item in place with PVC cement (length as required, cut after installation).

(5) Hose screen, Stainless steel screen material (used in washing machine).

(6) 3.2 mm diameter drain hole. Drill at the lowest point of the box to drain any moisture.

(7) Enclosures for Strong Motion Recorders #3 and #2 shall be Caltrans Type S, corrosion resistant without shelves or police panels.

(8) See nameplate schedule for engravings and materials.

NOTES:

1. The high and low vent sides shall be selected as required to facilitate conduit entrances and mounting location.
2. Strong motion sensor enclosures and mounting plates shall be installed level, plumb, parallel and perpendicular to the structure unless otherwise noted.
3. Strong motion enclosures shall be mounted to concrete wall with concrete fasteners, 6.35 dia, 40 mm depth embedment and allowable working load of tension at 1.223 kN and shear 2.91 kN. Enclosures mounted on structural steel shall be drill and tap. The strong motion sensor mounting plate shall be bolted through the enclosure to the structural steel. All hardware except fasteners shall be stainless steel.
4. For Downhole Enclosures details, see Sheet E-379.

MARK	DATE	DESCRIPTIONS	BY	CH'D	CCO#
1	02/19/08	ELECTRICAL MODIFICATIONS	MP EL	RR	42

REQUEST FOR INFORMATION NOT ADDRESSED IN THIS CCO REMAIN IN FORCE

REVISIONS

CONTRACT CHANGE ORDER NO._____
SHEET _____ OF _____

ALL DIMENSIONS ARE IN MILLIMETERS UNLESS OTHERWISE SHOWN.

DETAILS
STRONG MOTION DETECTION SYSTEM SENSOR AND RECORDER ENCLOSURES
NO SCALE

E-378

DATE	REVISED BY	DATE	REVISED
EJL	10/00	CYF	11/00

CALCULATED/DESIGNED BY — CHECKED BY

DESIGN OVERSIGHT — BEHZAD GOLEMOHAMMADI

STATE OF CALIFORNIA - DEPARTMENT OF TRANSPORTATION — Caltrans

FOR REDUCED PLANS ORIGINAL SCALE IS IN MILLIMETERS 0 20 40 60 80

DGN FILE =>T:\13103\MS\pse\SAS Struc\CCO\SAS CCO42\04-0120f1_0344R01.dgn
USERNAME =>llorico

CU 04251 — EA 0120F1

LAST REVISION 00-00-00 — DATE PLOTTED => 4/4/2008 TIME PLOTTED => 5:02:12 PM

DIST	COUNTY	ROUTE	KILOMETER POST TOTAL PROJECT	SHEET No	TOTAL SHEETS
04	SF	80	13.2/13.9	351R1	1204

REGISTERED ELECTRICAL ENGINEER 12/19/02 DATE

12-6-04
PLANS APPROVAL DATE

REGISTERED PROFESSIONAL ENGINEER JENS ERLINGSSON No. 8249 Exp. 9/30/06 ELECTRICAL STATE OF CALIFORNIA

PB POWER, Inc.
A Parsons Brinckerhoff Company
303 Second St., Suite 700N
San Francisco, CA 94107-1317

The State of California or its officers or agents shall not be responsible for the accuracy or completeness of electronic copies of this plan sheet.

Caltrans now has a web site! To get to the web site, go to http://www.dot.ca.gov

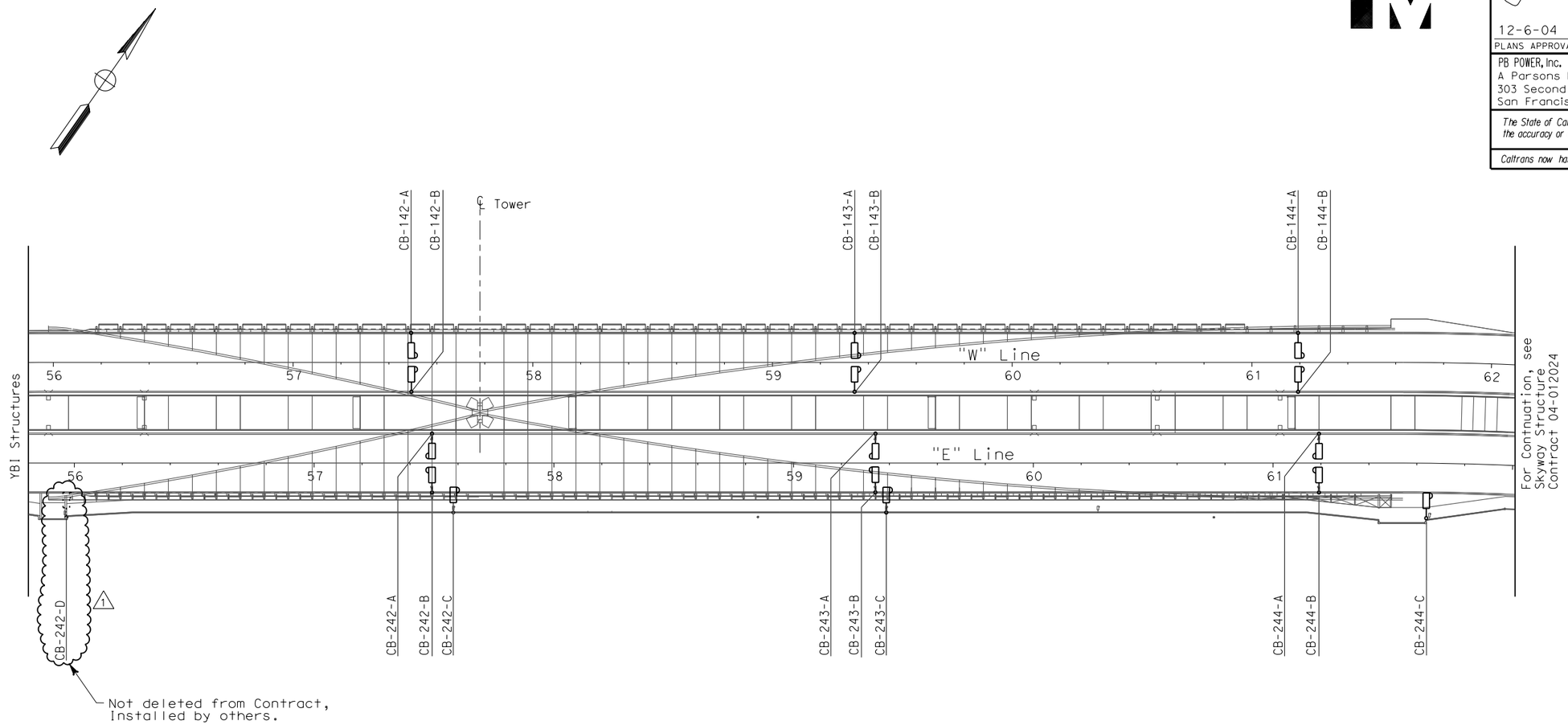

PLAN

NOTES:

1. References:
   - For call box conduit routing see sheets E-46 thru E-51 (WB), and sheets E-135 thru E-140 (EB).
   - For call box schedule, see sheet E-397.
   - For call box wiring diagrams, see sheets E-398 (WB), and sheets E-399 and E-400 (EB).
   - Call box are State-furnished and Contractor installed.

REGISTERED PROFESSIONAL ENGINEER MAXWELL FUMIO TAKAKI No. E 8651 Exp. 9/30/2008 ELECTRICAL STATE OF CALIFORNIA

FOR REVISION ONLY

REQUEST FOR INFORMATION NOT ADDRESSED IN THIS CCO REMAIN IN FORCE

MARK	DATE	DESCRIPTIONS	BY	CH'D	CCO#
1	02/19/08	ELECTRICAL MODIFICATIONS	MP EL	RR	42

REVISIONS

CONTRACT CHANGE ORDER NO._____
SHEET _____ OF _____

CALL BOX SYSTEM
SAS SUPERSTRUCTURE LOCATIONS
SCALE 1:1000

E-396

THIS PLAN ACCURATE FOR ELECTRICAL WORK ONLY.

ALL DIMENSIONS ARE IN MILLIMETERS UNLESS OTHERWISE SHOWN.

CALCULATED/DESIGNED BY	KG	DATE 11/01	REVISED BY
CHECKED BY	EDC	11/01	DATE REVISED

DESIGN OVERSIGHT
BEHZAD GOLEMOHAMMADI

STATE OF CALIFORNIA - DEPARTMENT OF TRANSPORTATION
Caltrans

LAST REVISION 00-00-00
DATE PLOTTED => 4/4/2008
TIME PLOTTED => 5:02:27 PM

FOR REDUCED PLANS ORIGINAL SCALE IS IN MILLIMETERS 0 20 40 60 80

DGN FILE =>T:\13103\MS\pse\SAS Struc\CCO\SAS CC042\04-0120f1_0351R01.dgn
USERNAME =>llorico

CU 04251

EA 0120F1

DIST	COUNTY	ROUTE	KILOMETER POST TOTAL PROJECT	SHEET No	TOTAL SHEETS
04	SF	80	13.2/13.9	352R1	1204

Caltrans Metric

REGISTERED ELECTRICAL ENGINEER 12/19/02 DATE

12-6-04
PLANS APPROVAL DATE

REGISTERED PROFESSIONAL ENGINEER JENS ERLINGSSON No. 8249 Exp. 9/30/06 ELECTRICAL STATE OF CALIFORNIA

PB POWER, Inc.
A Parsons Brinckerhoff Company
303 Second St., Suite 700N
San Francisco, CA 94107-1317

The State of California or its officers or agents shall not be responsible for the accuracy or completeness of electronic copies of this plan sheet.

Caltrans now has a web site! To get to the web site, go to http://www.dot.ca.gov

CALL BOX SCHEDULE - WESTBOUND

Call Box Number	Station Number	Mounting Type	Location / Roadway Location	RTU Connection	Remarks
CB-142A	57 + 49	Steel Barrier	Westbound North	RTU #10W	
CB-142B	57 + 49	Steel Barrier	Westbound South	RTU #10W	
CB-143A	59 + 34	Steel Barrier	Westbound North	RTU #11W	
CB-143B	59 + 34	Steel Barrier	Westbound South	RTU #11W	
CB-144A	61 + 19	Steel Barrier	Westbound North	RTU #11W	
CB-144B	61 + 19	Steel Barrier	Westbound South	RTU #11W	

CALL BOX SCHEDULE - EASTBOUND

Call Box Number	Station Number	Mounting Type	Location / Roadway Side	RTU Connection	Remarks
CB-242A	57 + 49	Steel Barrier	Eastbound North	RTU #10E	
CB-242B	57 + 49	Steel Barrier	Eastbound South	RTU #10E	
CB-242C	57 + 67	Bike Path Railing	Bike Path	RTU #10E	At Tower
CB-242D					Installed by others 1
CB-243A	59 + 34	Steel Barrier	Eastbound North	RTU #11E	
CB-243B	59 + 34	Steel Barrier	Eastbound South	RTU #11E	
CB-243C	59 + 39	Bike Path Railing	Bike Path	RTU #11E	
CB-244A	61 + 19	Steel Barrier	Eastbound North	RTU #11E	
CB-244B	61 + 19	Steel Barrier	Eastbound South	RTU #11E	
CB-244C	61 + 64	Bike Path Railing	Bike Path	RTU #11E	At Pier E2E

NOTES:

1. Call boxes will be State-furnished.
2. References:
   - For RTU #10W, #11W, #10E #11E panel layout, see sheet E-320.

REGISTERED PROFESSIONAL ENGINEER MAXWELL FUMIO TAKAKI No. E 8651 Exp. 9/30/2008 ELECTRICAL STATE OF CALIFORNIA

FOR REVISION ONLY

REQUEST FOR INFORMATION NOT ADDRESSED IN THIS CCO REMAIN IN FORCE

MARK	DATE	DESCRIPTIONS	BY	CH'D	CCO#
1	02/19/08	ELECTRICAL MODIFICATIONS	MP EL	RR	42

REVISIONS

CONTRACT CHANGE ORDER NO. _____
SHEET _____ OF _____

DETAILS
CALL BOX SYSTEM
CALL BOX SCHEDULES
NO SCALE

E-397

ALL DIMENSIONS ARE IN MILLIMETERS UNLESS OTHERWISE SHOWN.

STATE OF CALIFORNIA - DEPARTMENT OF TRANSPORTATION
Caltrans

DESIGN OVERSIGHT: BEHZAD GOLEMOHAMMADI

CALCULATED/DESIGNED BY: EJL DATE 9/01
CHECKED BY: EDC 11/01
REVISED BY
DATE REVISED

LAST REVISION 00-00-00
DATE PLOTTED => 4/4/2008
TIME PLOTTED => 5:02:48 PM

FOR REDUCED PLANS ORIGINAL SCALE IS IN MILLIMETERS 0 20 40 60 80

DGN FILE =>T:\13103\MS\pse\SAS Struc\CCO\SAS CC042\04-0120f1_0352R01.dgn
USERNAME =>llorico

CU 04251

EA 0120F1

DIST	COUNTY	ROUTE	KILOMETER POST TOTAL PROJECT	SHEET No	TOTAL SHEETS
04	SF	80	13.2/13.9	354R1	1204

REGISTERED ELECTRICAL ENGINEER 12/19/02 DATE

12-6-04
PLANS APPROVAL DATE

REGISTERED PROFESSIONAL ENGINEER JENS ERLINGSSON No. 8249 Exp. 9/30/06 ELECTRICAL STATE OF CALIFORNIA

PB POWER, Inc.
A Parsons Brinckerhoff Company
303 Second St., Suite 700N
San Francisco, CA 94107-1317

The State of California or its officers or agents shall not be responsible for the accuracy or completeness of electronic copies of this plan sheet.

Caltrans now has a web site! To get to the web site, go to http://www.dot.ca.gov

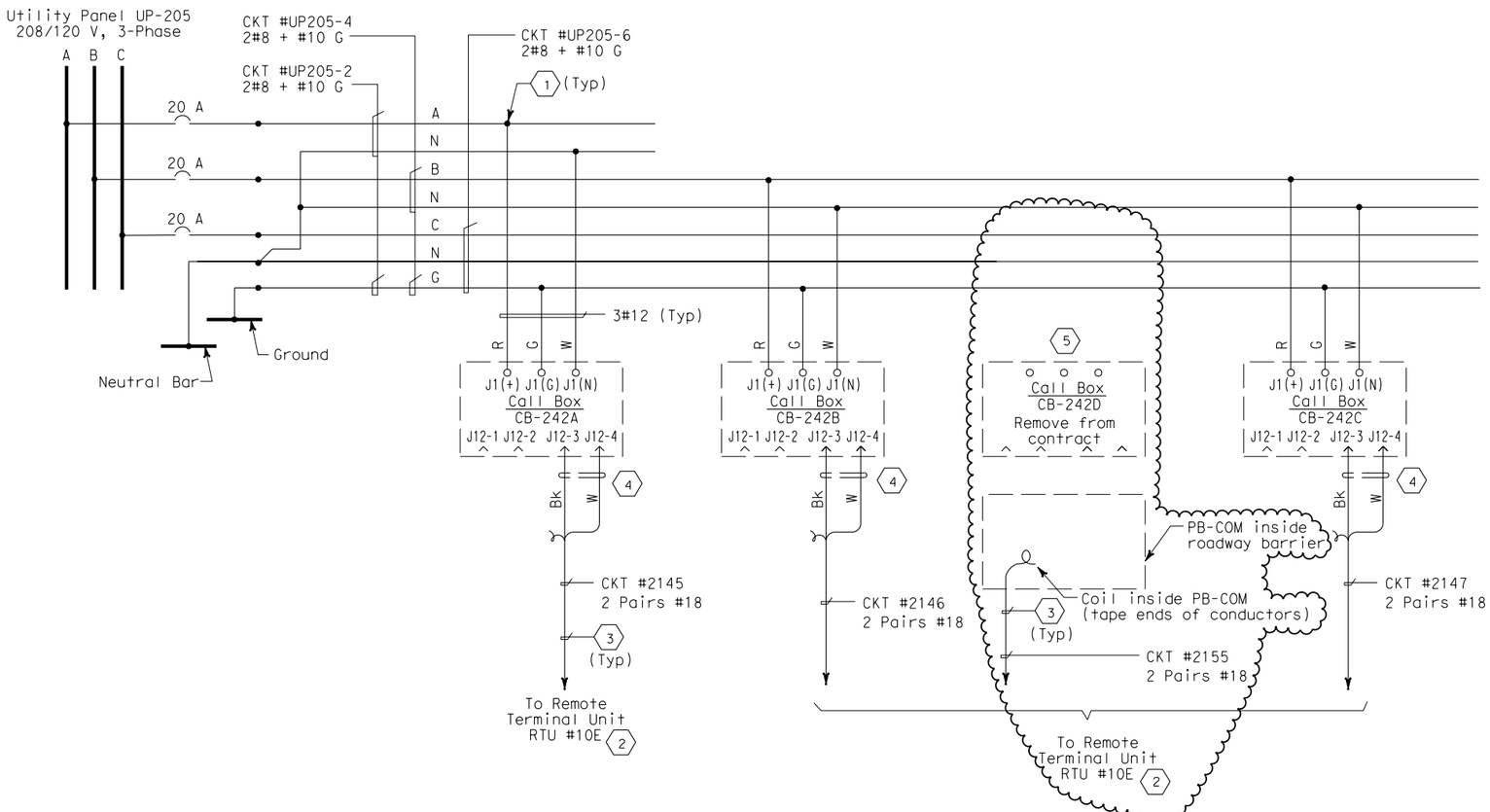

SHEET NOTES:

(1) Conductors spliced inside PB-Ltg.

(2) For continuation, see RTU #10E connection diagrams sheet E-331.

(3) Data cable 1-2 pairs #18 shielded with overall shield. Coil and tape end of pair #2 inside Call Box.

(4) The Contractor shall install resistors, approximately equal to the impedance (Zo) of the twised pairs, at the extreme ends of the multidrop network.

(5) Not deleted from contract, installed by others.

NOTE:

1. References:
   - For panel schedules, see sheets E-151.
   - For circuit and conduit/cable tray schedules, see sheets starting at E-401.
   - For call boxes schedule, see sheet E-397.

REGISTERED PROFESSIONAL ENGINEER MARRELL FUMIO TAKAKI No. E 8651 Exp. 9/30/2008 ELECTRICAL STATE OF CALIFORNIA

FOR REVISION ONLY

REQUEST FOR INFORMATION NOT ADDRESSED IN THIS CCO REMAIN IN FORCE

MARK	DATE	DESCRIPTIONS	BY	CH'D	CCO#
1	02/19/08	ELECTRICAL MODIFICATIONS	MP EL	RR	42

REVISIONS

CONTRACT CHANGE ORDER NO._____
SHEET _____ OF _____

EASTBOUND SAS SUPERSTRUCTURE

DETAILS
CALL BOX SYSTEM
CALL BOX WIRING DIAGRAM
NO SCALE

E-399

ALL DIMENSIONS ARE IN MILLIMETERS UNLESS OTHERWISE SHOWN.

FOR REDUCED PLANS ORIGINAL SCALE IS IN MILLIMETERS 0 20 40 60 80

DGN FILE =>T:\13103\MS\pse\SAS Struc\CCO\SAS CCO42\04-0120f1_0354R01.dgn
USERNAME =>llorico

CU 04251 | EA 0120F1

DATE PLOTTED => 4/4/2008
TIME PLOTTED => 5:03:09 PM

LAST REVISION 00-00-00

STATE OF CALIFORNIA - DEPARTMENT OF TRANSPORTATION
Caltrans

DESIGN OVERSIGHT
BEHZAD GOLEMOHAMMADI

CALCULATED/DESIGNED BY EJL DATE 09/01
CHECKED BY EDC 11/01

REVISED BY DATE REVISED

DIST	COUNTY	ROUTE	KILOMETER POST TOTAL PROJECT	SHEET No	TOTAL SHEETS
04	SF	80	13.2/13.9	357R1	1204

REGISTERED ELECTRICAL ENGINEER 12/19/02 DATE

12-6-04
PLANS APPROVAL DATE

REGISTERED PROFESSIONAL ENGINEER JENS ERLINGSSON No. 8249 Exp. 9/30/06 ELECTRICAL STATE OF CALIFORNIA

PB POWER, Inc.
A Parsons Brinckerhoff Company
303 Second St., Suite 700N
San Francisco, CA 94107-1317

The State of California or its officers or agents shall not be responsible for the accuracy or completeness of electronic copies of this plan sheet.

Caltrans now has a web site! To get to the web site, go to http://www.dot.ca.gov

Caltrans Metric

REQUEST FOR INFORMATION NOT ADDRESSED IN THIS CCO REMAIN IN FORCE

MARK	DATE	DESCRIPTIONS	BY	CH'D	CCO#
1	02/19/08	ELECTRICAL MODIFICATIONS	MP EL	RR	42

REVISIONS

CONTRACT CHANGE ORDER NO._____
SHEET _____ OF _____

REGISTERED PROFESSIONAL ENGINEER MAXWELL FUMIO TAKAKI No. E 8651 Exp. 9/30/2008 ELECTRICAL STATE OF CALIFORNIA

FOR REVISION ONLY

CONDUIT DATA

Conduit No	Reference	Size	Type	Total Fill (mm²)	Allowable Fill (mm²)	Included Cable No.	Conductor Type
0583	E-11, E-21	103	RGS conduit	3077.66	3324.51	Pull rope	Soft-Fiber Polyester
						2121	1-3/C + gnd #1/0, 600 V, EPR insulation
						2120	1-3/C + gnd #1/0, 600 V, EPR insulation
						2125	1-3/C + gnd 250 kcmil, 600 V, EPR insulation
0584	E-11, E-21	103	RGS conduit	2518.76	3324.51	A-3043-1	1-3/C + gnd #2, 600 V, EPR insulation
						S-3051-1	1-3/C + gnd #4, 600 V, EPR insulation
						A-3006-1	1-3/C + gnd #4, 600 V, EPR insulation
						S-3022-1	1-3/C + gnd #2, 600 V, EPR insulation
						S-3023-1	1-3/C + gnd #4, 600 V, EPR insulation
						S-3021-1	1-3/C + gnd #4, 600 V, EPR insulation
						Pull rope	Soft-Fiber Polyester
0585	E-11, E-20	103	RGS conduit	647.30	3324.51	Pull rope	Soft-Fiber Polyester
						1477-2	72 Fiber, single mode fiberoptic riser cable
						1475-3	72 Fiber, single mode fiberoptic riser cable
0586	E-11, E-21	103	RGS conduit	1296.55	3324.51	2910-2	4 pair #22, shielded pairs, FEP insulation
						Pull rope	Soft-Fiber Polyester
						2910-3	4 pair #22, shielded pairs, FEP insulation
						1473-4	50 pair #18, shielded pairs, IS/OS shield 600 V, XLPE insul., PVC jacket
0587	E-11, E-21	103	RGS conduit	2780.99	3324.51	2391	3-1/C #4/0 + 1/C#1/0 gnd, 15 kV, EPR insulation
						Pull rope	Soft-Fiber Polyester
0588	E-11, E-21	103	RGS conduit	0.00	3324.51	Pull rope	Soft-Fiber Polyester
0590	E-11, E-20	103	RGS conduit	0.00	3324.51	Pull rope	Soft-Fiber Polyester
0591	E-11, E-21	103	RGS conduit	0.00	3324.51	Pull rope	Soft-Fiber Polyester
0600	E-11, E-20	103	RGS conduit	0.00	3324.51	Pull rope	Soft-Fiber Polyester
0601	E-11, E-20	103	RGS conduit	0.00	3324.51	Pull rope	Soft-Fiber Polyester
0602	E-11, E-20	103	RGS conduit	1201.71	3324.51	1474-4	50 pair #18, shielded pairs, IS/OS shield 600V, XLPE insul., PVC jacket
						Pull rope	Soft-Fiber Polyester
0603	E-11, E-20	103	RGS conduit	0.00	3324.51	Pull rope	Soft-Fiber Polyester
0610	E-11, E-21	103	RGS conduit	0.00	3324.51	Pull rope	Soft-Fiber Polyester
0611	E-11, E-21	103	RGS conduit	0.00	3324.51	Pull rope	Soft-Fiber Polyester
0612	E-11, E-21	103	RGS conduit	0.00	3324.51	Pull rope	Soft-Fiber Polyester
0613	E-11, E-21	103	RGS conduit	0.00	3324.51	Pull rope	Soft-Fiber Polyester
1 ~~1112~~							
1113	E-46	41	RGS conduit	0.00	534.55	Pull rope	Soft-Fiber Polyester
1114	E-46	41	RGS conduit	0.00	534.55	Pull rope	Soft-Fiber Polyester
1115	E-46	41	RGS conduit	0.00	534.55	Pull rope	Soft-Fiber Polyester
1116	E-47	41	RGS conduit	0.00	534.55	Pull rope	Soft-Fiber Polyester
1117	E-47	41	RGS conduit	0.00	534.55	Pull rope	Soft-Fiber Polyester
1118	E-47	41	RGS conduit	0.00	534.55	Pull rope	Soft-Fiber Polyester
1119	E-47, E-48	41	RGS conduit	0.00	534.55	Pull rope	Soft-Fiber Polyester
1120	E-48	41	RGS conduit	0.00	534.55	Pull rope	Soft-Fiber Polyester
1121	E-48	41	RGS conduit	0.00	534.55	Pull rope	Soft-Fiber Polyester
1122	E-48	41	RGS conduit	0.00	534.55	Pull rope	Soft-Fiber Polyester
1123	E-49	41	RGS conduit	0.00	534.55	Pull rope	Soft-Fiber Polyester
1124	E-49	41	RGS conduit	0.00	534.55	Pull rope	Soft-Fiber Polyester

CONDUIT DATA

Conduit No	Reference	Size	Type	Total Fill (mm²)	Allowable Fill (mm²)	Included Cable No.	Conductor Type
1125	E-49	41	RGS conduit	0.00	534.55	Pull rope	Soft-Fiber Polyester
1126	E-49	41	RGS conduit	0.00	534.55	Pull rope	Soft-Fiber Polyester
1127	E-50	41	RGS conduit	0.00	534.55	Pull rope	Soft-Fiber Polyester
1128	E-50	41	RGS conduit	0.00	534.55	Pull rope	Soft-Fiber Polyester
1129	E-50	41	RGS conduit	0.00	534.55	Pull rope	Soft-Fiber Polyester
1130	E-50, E-51	41	RGS conduit	0.00	534.55	Pull rope	Soft-Fiber Polyester
1131	E-50, E-51	41	RGS conduit	0.00	534.55	Pull rope	Soft-Fiber Polyester
1347	E-46	41	RGS conduit	0.00	534.55	Pull rope	Soft-Fiber Polyester
1348	E-46	41	RGS conduit	0.00	534.55	Pull rope	Soft-Fiber Polyester
1349	E-46	41	RGS conduit	0.00	534.55	Pull rope	Soft-Fiber Polyester
1350	E-46	41	RGS conduit	212.85	534.55	A-3001-2	3 + 1 gnd #6,#8, 600 V, RHH/RHW insulation
						Pull rope	Soft-Fiber Polyester
1351	E-46	41	RGS conduit	212.85	534.55	Pull rope	Soft-Fiber Polyester
						A-3001-2	3 + 1 gnd #6,#8, 600 V, RHH/RHW insulation
1352	E-46	41	RGS conduit	212.85	534.55	A-3001-2	3 + 1 gnd #6,#8, 600 V, RHH/RHW insulation
						Pull rope	Soft-Fiber Polyester
1353	E-46	41	RGS conduit	212.85	534.55	A-3001-2	3 + 1 gnd #6,#8, 600 V, RHH/RHW insulation
						Pull rope	Soft-Fiber Polyester
1354	E-46	41	RGS conduit	212.85	534.55	Pull rope	Soft-Fiber Polyester
						A-3001-2	3 + 1 gnd #6,#8, 600 V, RHH/RHW insulation
1355	E-46	41	RGS conduit	212.85	534.55	Pull rope	Soft-Fiber Polyester
						A-3001-2	3 + 1 gnd #6,#8, 600 V, RHH/RHW insulation
1356	E-46	41	RGS conduit	212.85	534.55	Pull rope	Soft-Fiber Polyester
						A-3001-2	3 + 1 gnd #6,#8, 600 V, RHH/RHW insulation
1357	E-46	41	RGS conduit	212.85	534.55	A-3001-2	3 + 1 gnd #6,#8, 600 V, RHH/RHW insulation
						Pull rope	Soft-Fiber Polyester
1358	E-47	41	RGS conduit	212.85	534.55	Pull rope	Soft-Fiber Polyester
						A-3001-2	3 + 1 gnd #6,#8, 600 V, RHH/RHW insulation
1359	E-47	41	RGS conduit	212.85	534.55	Pull rope	Soft-Fiber Polyester
						A-3002-2	3 + 1 gnd #6,#8, 600 V, RHH/RHW insulation
1360	E-47	41	RGS conduit	212.85	534.55	Pull rope	Soft-Fiber Polyester
						A-3002-2	3 + 1 gnd #6,#8, 600 V, RHH/RHW insulation

For continuation, see next sheet.

CONDUIT AND TRAY SCHEDULE

E-402

REVISED BY	DATE REVISED
PBP	AB

DATE 8/02

CALCULATED/DESIGNED BY	CHECKED BY

DESIGN OVERSIGHT
BEHZAD GOLEMOHAMMADI

STATE OF CALIFORNIA - DEPARTMENT OF TRANSPORTATION
Caltrans

LAST REVISION 00-00-00
DATE PLOTTED => 4/4/2008
TIME PLOTTED => 5:03:29 PM

DIST	COUNTY	ROUTE	KILOMETER POST TOTAL PROJECT	SHEET No	TOTAL SHEETS
04	SF	80	13.2/13.9	359R1	1204

REGISTERED ELECTRICAL ENGINEER 12/19/02 DATE

12-6-04
PLANS APPROVAL DATE

REGISTERED PROFESSIONAL ENGINEER JENS ERLINGSSON No. 8249 Exp. 9/30/06 ELECTRICAL STATE OF CALIFORNIA

PB POWER, Inc.
A Parsons Brinckerhoff Company
303 Second St., Suite 700N
San Francisco, CA 94107-1317

The State of California or its officers or agents shall not be responsible for the accuracy or completeness of electronic copies of this plan sheet.

Caltrans now has a web site! To get to the web site, go to http://www.dot.ca.gov

Caltrans Metric

REQUEST FOR INFORMATION NOT ADDRESSED IN THIS CCO REMAIN IN FORCE

MARK	DATE	DESCRIPTIONS	BY	CH'D	CCO#
1	02/19/08	ELECTRICAL MODIFICATIONS	MP EL	RR	42

REVISIONS

CONTRACT CHANGE ORDER NO. _____
SHEET _____ OF _____

REGISTERED PROFESSIONAL ENGINEER MANNELL FUMIO TAKAKI No. E 8651 Exp. 9/30/2008 ELECTRICAL STATE OF CALIFORNIA

FOR REVISION ONLY

CONDUIT DATA

Conduit No	Reference	Size	Type	Total Fill (mm²)	Allowable Fill (mm²)	Included Cable No.	Conductor Type
1457	E-46	41	RGS conduit	0.00	534.55	Pull rope	Soft-Fiber Polyester
1458	E-47	41	RGS conduit	0.00	534.55	Pull rope	Soft-Fiber Polyester
1459	E-47	41	RGS conduit	0.00	534.55	Pull rope	Soft-Fiber Polyester
1460	E-47	41	RGS conduit	0.00	534.55	Pull rope	Soft-Fiber Polyester
1461	E-47	41	RGS conduit	0.00	534.55	Pull rope	Soft-Fiber Polyester
1462	E-47	41	RGS conduit	0.00	534.55	Pull rope	Soft-Fiber Polyester
1463	E-47	41	RGS conduit	0.00	534.55	Pull rope	Soft-Fiber Polyester
1464	E-47	41	RGS conduit	0.00	534.55	Pull rope	Soft-Fiber Polyester
1465	E-47	41	RGS conduit	324.29	534.55	A-3009-3	1-3/C + gnd #6, 600 V, EPR insulation
						Pull rope	Soft-Fiber Polyester
1466	E-47	41	RGS conduit	0.00	534.55	Pull rope	Soft-Fiber Polyester
1467	E-47	41	RGS conduit	324.29	534.55	A-3010-3	1-3/C #6 + gnd 600 V, RHH/RHW insulation
						Pull rope	Soft-Fiber Polyester
1468	E-47	41	RGS conduit	0.00	534.55	Pull rope	Soft-Fiber Polyester
1469	E-48	41	RGS conduit	0.00	534.55	Pull rope	Soft-Fiber Polyester
1470	E-48	41	RGS conduit	0.00	534.55	Pull rope	Soft-Fiber Polyester
1471	E-48	41	RGS conduit	0.00	534.55	Pull rope	Soft-Fiber Polyester
1472	E-48	41	RGS conduit	0.00	534.55	Pull rope	Soft-Fiber Polyester
1473	E-48	41	RGS conduit	0.00	534.55	Pull rope	Soft-Fiber Polyester
1474	E-48	41	RGS conduit	0.00	534.55	Pull rope	Soft-Fiber Polyester
1475	E-48	41	RGS conduit	0.00	534.55	Pull rope	Soft-Fiber Polyester
1476	E-48	41	RGS conduit	0.00	534.55	Pull rope	Soft-Fiber Polyester
1477	E-48	41	RGS conduit	0.00	534.55	Pull rope	Soft-Fiber Polyester
1478	E-48	41	RGS conduit	0.00	534.55	Pull rope	Soft-Fiber Polyester
1479	E-48	41	RGS conduit	0.00	534.55	Pull rope	Soft-Fiber Polyester
1481	E-49	41	RGS conduit	0.00	534.55	Pull rope	Soft-Fiber Polyester
1482	E-49	41	RGS conduit	0.00	534.55	Pull rope	Soft-Fiber Polyester
1483	E-49	41	RGS conduit	0.00	534.55	Pull rope	Soft-Fiber Polyester
1484	E-49	41	RGS conduit	0.00	534.55	Pull rope	Soft-Fiber Polyester
1485	E-49	41	RGS conduit	0.00	534.55	Pull rope	Soft-Fiber Polyester
1486	E-49	41	RGS conduit	0.00	534.55	Pull rope	Soft-Fiber Polyester
1487	E-49	41	RGS conduit	0.00	534.55	Pull rope	Soft-Fiber Polyester
1488	E-49	41	RGS conduit	0.00	534.55	Pull rope	Soft-Fiber Polyester
1489	E-49	41	RGS conduit	0.00	534.55	Pull rope	Soft-Fiber Polyester
1490	E-49	41	RGS conduit	0.00	534.55	Pull rope	Soft-Fiber Polyester
1491	E-49	41	RGS conduit	0.00	534.55	Pull rope	Soft-Fiber Polyester
1492	E-50	41	RGS conduit	0.00	534.55	Pull rope	Soft-Fiber Polyester
1493	E-50	41	RGS conduit	0.00	534.55	Pull rope	Soft-Fiber Polyester
1494	E-50	41	RGS conduit	0.00	534.55	Pull rope	Soft-Fiber Polyester

CONDUIT DATA

Conduit No	Reference	Size	Type	Total Fill (mm²)	Allowable Fill (mm²)	Included Cable No.	Conductor Type
1495	E-50	41	RGS conduit	0.00	534.55	Pull rope	Soft-Fiber Polyester
1496	E-50	41	RGS conduit	0.00	534.55	Pull rope	Soft-Fiber Polyester
1497	E-50	41	RGS conduit	0.00	534.55	Pull rope	Soft-Fiber Polyester
1498	E-50	41	RGS conduit	0.00	534.55	Pull rope	Soft-Fiber Polyester
1499	E-50	41	RGS conduit	0.00	534.55	Pull rope	Soft-Fiber Polyester
1513	E-46	41	RGS conduit	0.00	534.55	Pull rope	Soft-Fiber Polyester
1514	E-46	41	RGS conduit	0.00	534.55	Pull rope	Soft-Fiber Polyester
1515	E-46, E-47	41	RGS conduit	0.00	534.55	Pull rope	Soft-Fiber Polyester
1516	E-47	41	RGS conduit	0.00	534.55	Pull rope	Soft-Fiber Polyester
1517	E-47	41	RGS conduit	0.00	534.55	Pull rope	Soft-Fiber Polyester
1518	E-47	41	RGS conduit	0.00	534.55	Pull rope	Soft-Fiber Polyester
1519	E-47, E-48	41	RGS conduit	0.00	534.55	Pull rope	Soft-Fiber Polyester
1520	E-48	41	RGS conduit	0.00	534.55	Pull rope	Soft-Fiber Polyester
1521	E-48	41	RGS conduit	0.00	534.55	Pull rope	Soft-Fiber Polyester
1522	E-48	41	RGS conduit	0.00	534.55	Pull rope	Soft-Fiber Polyester
1523	E-49	41	RGS conduit	0.00	534.55	Pull rope	Soft-Fiber Polyester
1524	E-49	41	RGS conduit	0.00	534.55	Pull rope	Soft-Fiber Polyester
1525	E-49	41	RGS conduit	0.00	534.55	Pull rope	Soft-Fiber Polyester
1526	E-49	41	RGS conduit	0.00	534.55	Pull rope	Soft-Fiber Polyester
1527	E-50	41	RGS conduit	0.00	534.55	Pull rope	Soft-Fiber Polyester
1528	E-50	41	RGS conduit	0.00	534.55	Pull rope	Soft-Fiber Polyester
1529	E-50	41	RGS conduit	0.00	534.55	Pull rope	Soft-Fiber Polyester
1530	E-50	41	RGS conduit	0.00	534.55	Pull rope	Soft-Fiber Polyester
1531	E-51	41	RGS conduit	0.00	534.55	Pull rope	Soft-Fiber Polyester
~~1731~~							
1732	E-46	41	RGS conduit	0.00	534.55	Pull rope	Soft-Fiber Polyester
1733	E-46	41	RGS conduit	0.00	534.55	Pull rope	Soft-Fiber Polyester
1734	E-46	41	RGS conduit	0.00	534.55	Pull rope	Soft-Fiber Polyester

For continuation, see next sheet.

CONDUIT AND TRAY SCHEDULE

E-404

CALCULATED/ DESIGNED BY	DATE 8/02	REVISED BY	DATE REVISED
PBP	8/02	AB	
CHECKED BY			

DESIGN OVERSIGHT
BEHZAD GOLEMOHAMMADI

STATE OF CALIFORNIA - DEPARTMENT OF TRANSPORTATION
Caltrans

LAST REVISION 00-00-00
DATE PLOTTED => 4/4/2008
TIME PLOTTED => 5:04:01 PM

FOR REDUCED PLANS ORIGINAL SCALE IS IN MILLIMETERS 0 20 40 60 80

DGN FILE =>T:\13103\MS\pse\SAS Struc\CCO\SAS CCO42\04-0120f1_0359R01.dgn
USERNAME =>llorico

CU 04251 EA 0120F1

DIST	COUNTY	ROUTE	KILOMETER POST TOTAL PROJECT	SHEET No	TOTAL SHEETS
04	SF	80	13.2/13.9	360R1	1204

REQUEST FOR INFORMATION NOT ADDRESSED IN THIS CCO REMAIN IN FORCE

MARK	DATE	DESCRIPTIONS	BY	CH'D	CCO#
1	02/19/08	ELECTRICAL MODIFICATIONS	MP EL	RR	42

REVISIONS

CONTRACT CHANGE ORDER NO. _____
SHEET _____ OF _____

REGISTERED PROFESSIONAL ENGINEER MANNELL FUMIO TAKAHASHI No. E 8651 Exp. 9/30/2008 ELECTRICAL STATE OF CALIFORNIA

FOR REVISION ONLY

Caltrans Metric

Jens Erlingsson 12/19/02
REGISTERED ELECTRICAL ENGINEER DATE

12-6-04
PLANS APPROVAL DATE

REGISTERED PROFESSIONAL ENGINEER JENS ERLINGSSON No. 8249 Exp. 9/30/06 ELECTRICAL STATE OF CALIFORNIA

PB POWER, Inc.
A Parsons Brinckerhoff Company
303 Second St., Suite 700N
San Francisco, CA 94107-1317

The State of California or its officers or agents shall not be responsible for the accuracy or completeness of electronic copies of this plan sheet.

Caltrans now has a web site! To get to the web site, go to http://www.dot.ca.gov

CONDUIT DATA

Conduit No	Reference	Size	Type	Total Fill (mm²)	Allowable Fill (mm²)	Included Cable No.	Conductor Type
1735	E-46	41	RGS conduit	0.00	534.55	Pull rope	Soft-Fiber Polyester
1736	E-46	41	RGS conduit	0.00	534.55	Pull rope	Soft-Fiber Polyester
1737	E-47	41	RGS conduit	0.00	534.55	Pull rope	Soft-Fiber Polyester
1738	E-47	41	RGS conduit	126.88	534.55	Pull rope	Soft-Fiber Polyester
						UP105-3	1-2/C + gnd #10, 600 V, EPR insulation
1739	E-47	41	RGS conduit	126.88	534.55	UP105-3	1-2/C + gnd #10, 600 V, EPR insulation
						Pull rope	Soft-Fiber Polyester
1740	E-47	41	RGS conduit	126.88	534.55	UP105-3	1-2/C + gnd #10, 600 V, EPR insulation
						Pull rope	Soft-Fiber Polyester
1741	E-47	41	RGS conduit	126.88	534.55	UP105-3	1-2/C + gnd #10, 600 V, EPR insulation
						Pull rope	Soft-Fiber Polyester
1742	E-47	41	RGS conduit	0.00	534.55	Pull rope	Soft-Fiber Polyester
1743	E-47	41	RGS conduit	0.00	534.55	Pull rope	Soft-Fiber Polyester
1744	E-47	41	RGS conduit	0.00	534.55	Pull rope	Soft-Fiber Polyester
1745	E-47	41	RGS conduit	440.31	534.55	UP106-3	1-2/C + gnd #8, 600 V, EPR insulation
						A-3010-2	3 + 1 gnd #6,#8, 600 V, RHH/RHW insulation
						Pull rope	Soft-Fiber Polyester
1746	E-48	41	RGS conduit	440.31	534.55	Pull rope	Soft-Fiber Polyester
						A-3010-2	3 + 1 gnd #6,#8, 600 V, RHH/RHW insulation
						UP106-3	1-2/C + gnd #8, 600 V, EPR insulation
1747	E-48	41	RGS conduit	0.00	534.55	Pull rope	Soft-Fiber Polyester
1748	E-48	41	RGS conduit	0.00	534.55	Pull rope	Soft-Fiber Polyester
1749	E-48	41	RGS conduit	0.00	534.55	Pull rope	Soft-Fiber Polyester
1750	E-48	41	RGS conduit	0.00	534.55	Pull rope	Soft-Fiber Polyester
1751	E-49	41	RGS conduit	0.00	534.55	Pull rope	Soft-Fiber Polyester
1752	E-49	41	RGS conduit	0.00	534.55	Pull rope	Soft-Fiber Polyester
1753	E-49	41	RGS conduit	0.00	534.55	Pull rope	Soft-Fiber Polyester
1754	E-49	41	RGS conduit	0.00	534.55	Pull rope	Soft-Fiber Polyester
1755	E-49	41	RGS conduit	0.00	534.55	Pull rope	Soft-Fiber Polyester
1756	E-50	41	RGS conduit	0.00	534.55	Pull rope	Soft-Fiber Polyester
1757	E-50	41	RGS conduit	0.00	534.55	Pull rope	Soft-Fiber Polyester
1758	E-50	41	RGS conduit	0.00	534.55	Pull rope	Soft-Fiber Polyester
1759	E-50	41	RGS conduit	0.00	534.55	Pull rope	Soft-Fiber Polyester
1760	E-50	41	RGS conduit	49.21	534.55	Pull rope	Soft-Fiber Polyester
						UP108-3A	2 + 1 gnd #12,#12, 600 V, RHH/RHW insulation
1761	E-50	41	RGS conduit	49.21	534.55	UP108-3A	2 + 1 gnd #12,#12, 600 V, RHH/RHW insulation
						Pull rope	Soft-Fiber Polyester
1762	E-50	41	RGS conduit	373.50	534.55	1106	1-3/C + gnd #6, 600 V, EPR insulation
						UP108-3A	2 + 1 gnd #12,#12, 600 V, RHH/RHW insulation
						Pull rope	Soft-Fiber Polyester
1763	E-51	41	RGS conduit	324.29	534.55	Pull rope	Soft-Fiber Polyester
						1106	1-3/C + gnd #6, 600 V, EPR insulation
1764	E-51	41	RGS conduit	0.00	534.55	Pull rope	Soft-Fiber Polyester
1765	E-51	41	RGS conduit	324.29	534.55	1106	1-3/C + gnd #6, 600 V, EPR insulation
						Pull rope	Soft-Fiber Polyester

CONDUIT DATA

Conduit No	Reference	Size	Type	Total Fill (mm²)	Allowable Fill (mm²)	Included Cable No.	Conductor Type
1766	E-79	53	RGS-PVC coated conduit	754.18	879.42	Pull rope	Soft-Fiber Polyester
						1115	1-3/C + gnd #1/0, 600 V, EPR insulation
1767	E-79	53	RGS-PVC coated conduit	147.25	879.42	Pull rope	Soft-Fiber Polyester
						1115-2	1-3/C #16, 600 V, EPR insulation
						1115-1	1-3/C #14, 600 V, EPR insulation
1768	E-120, E-101	78	RGS-PVC coated conduit	882.89	1935.24	Pull rope	Soft-Fiber Polyester
						1117	1-3/C + gnd #2/0, 600 V, EPR insulation
1769	E-120, E-101	27	RGS-PVC coated conduit	147.25	229.03	1117-2	1-3/C #16, 600 V, EPR insulation
						Pull rope	Soft-Fiber Polyester
						1117-1	1-3/C #14, 600 V, EPR insulation
1 ~~1831~~							
1832	E-46	41	RGS conduit	474.91	534.55	A-1035-1	1-3/C + gnd #6, 600V, EPR insulation
						UP104-3A	2 + 1gnd #12,#12, 600 V, RHH/RHW insulation
						Pull rope	Soft-Fiber Polyester
						S-1031-1	1-3/C + gnd #2, 600V, EPR insulation 1
1833	E-46	41	RGS conduit	474.91	534.55	S-1031-1	1-3/C + gnd #2, 600V, EPR insulation
						A-1035-1	1-3/C + gnd #6, 600V, EPR insulation
						UP104-3A	2 + 1gnd #12,#12, 600 V, RHH/RHW insulation
						Pull rope	Soft-Fiber Polyester
1834	E-46	41	RGS conduit	474.91	534.55	UP104-3A	2 + 1 gnd #12,#12, 600 V, RHH/RHW insulation
						A-1035-1	1-3/C + gnd #6, 600V, EPR insulation 1
						Pull rope	Soft-Fiber Polyester
						S-1031-1	1-3/C + gnd #2, 600V, EPR insulation 1
1835	E-46	41	RGS conduit	0.00	534.55	Pull rope	Soft-Fiber Polyester
1836	E-46, E-47	41	RGS conduit	0.00	534.55	Pull rope	Soft-Fiber Polyester
1837	E-47	41	RGS conduit	0.00	534.55	Pull rope	Soft-Fiber Polyester
1838	E-47	41	RGS conduit	212.85	534.55	A-3009-2	3 + 1 gnd #6,#8, 600 V, RHH/RHW insulation
						Pull rope	Soft-Fiber Polyester
1839	E-47	41	RGS conduit	212.85	534.55	Pull rope	Soft-Fiber Polyester
						A-3009-2	3 + 1 gnd #6,#8, 600 V, RHH/RHW insulation
1840	E-47	41	RGS conduit	262.06	534.55	A-3009-2	3 + 1 gnd #6,#8, 600 V, RHH/RHW insulation
						UP105-4A	2 + 1gnd #12,#12, 600 V, RHH/RHW insulation
						Pull rope	Soft-Fiber Polyester
1841	E-47	41	RGS conduit	262.06	534.55	UP105-4A	2 + 1gnd #12,#12, 600 V, RHH/RHW insulation
						Pull rope	Soft-Fiber Polyester
						A-3009-2	3 + 1 gnd #6,#8, 600 V, RHH/RHW insulation
1842	E-47	41	RGS conduit	212.85	534.55	Pull rope	Soft-Fiber Polyester
						A-3009-2	3 + 1 gnd #6,#8, 600 V, RHH/RHW insulation

For continuation, see next sheet.

CONDUIT AND TRAY SCHEDULE

E-405

REVISED BY	DATE REVISED
PBP	8/02

CALCULATED/DESIGNED BY	CHECKED BY
AB	

DESIGN OVERSIGHT
BEHZAD GOLEMOHAMMADI

STATE OF CALIFORNIA - DEPARTMENT OF TRANSPORTATION
Caltrans

LAST REVISION 00-00-00
DATE PLOTTED => 4/4/2008
TIME PLOTTED => 5:04:23 PM

DIST	COUNTY	ROUTE	KILOMETER POST TOTAL PROJECT	SHEET No	TOTAL SHEETS
04	SF	80	13.2/13.9	361R1	1204

REQUEST FOR INFORMATION NOT ADDRESSED IN THIS CCO REMAIN IN FORCE

MARK	DATE	DESCRIPTIONS	BY	CH'D	CCO#
1	02/19/08	ELECTRICAL MODIFICATIONS	MP EL	RR	42

REVISIONS

CONTRACT CHANGE ORDER NO. _____
SHEET _____ OF _____

REGISTERED PROFESSIONAL ENGINEER MAXWELL FUMIO TAKAKI No. E 8651 Exp. 9/30/2008 ELECTRICAL STATE OF CALIFORNIA

FOR REVISION ONLY

Caltrans Metric

Jens Erlingsson 12/19/02
REGISTERED ELECTRICAL ENGINEER DATE

REGISTERED PROFESSIONAL ENGINEER JENS ERLINGSSON No. 8249 Exp. 9/30/06 ELECTRICAL STATE OF CALIFORNIA

12-6-04
PLANS APPROVAL DATE

PB POWER, Inc.
A Parsons Brinckerhoff Company
303 Second St., Suite 700N
San Francisco, CA 94107-1317

The State of California or its officers or agents shall not be responsible for the accuracy or completeness of electronic copies of this plan sheet.

Caltrans now has a web site! To get to the web site, go to http://www.dot.ca.gov

CONDUIT DATA

Conduit No	Reference	Size	Type	Total Fill (mm²)	Allowable Fill (mm²)	Included Cable No.	Conductor Type
1843	E-47	41	RGS conduit	0.00	534.55	Pull rope	Soft-Fiber Polyester
1844	E-47	41	RGS conduit	0.00	534.55	Pull rope	Soft-Fiber Polyester
1845	E-47	41	RGS conduit	0.00	534.55	Pull rope	Soft-Fiber Polyester
1846	E-48	41	RGS conduit	0.00	534.55	Pull rope	Soft-Fiber Polyester
1847	E-48	41	RGS conduit	0.00	534.55	Pull rope	Soft-Fiber Polyester
1848	E-48	41	RGS conduit	0.00	534.55	Pull rope	Soft-Fiber Polyester
1849	E-48	41	RGS conduit	0.00	534.55	Pull rope	Soft-Fiber Polyester
1850	E-48	41	RGS conduit	0.00	534.55	Pull rope	Soft-Fiber Polyester
1851	E-49	41	RGS conduit	0.00	534.55	Pull rope	Soft-Fiber Polyester
1852	E-49	41	RGS conduit	0.00	534.55	Pull rope	Soft-Fiber Polyester
1853	E-49	41	RGS conduit	0.00	534.55	Pull rope	Soft-Fiber Polyester
1854	E-49	41	RGS conduit	262.06	534.55	UP107-3A	2 + 1 gnd #12,#12, 600 V, RHH/RHW insulation
						Pull rope	Soft-Fiber Polyester
1855	E-49	41	RGS conduit	262.06	534.55	UP107-3A	2 + 1 gnd #12,#12, 600 V, RHH/RHW insulation
						Pull rope	Soft-Fiber Polyester
1856	E-50	41	RGS conduit	262.06	534.55	UP107-3A	2 + 1 gnd #12,#12, 600 V, RHH/RHW insulation
						Pull rope	Soft-Fiber Polyester
1857	E-50	41	RGS conduit	162.40	534.55	UP107-3A	2 + 1 gnd #12,#12, 600 V, RHH/RHW insulation
						Pull rope	Soft-Fiber Polyester
1858	E-50	41	RGS conduit	0.00	534.55	Pull rope	Soft-Fiber Polyester
1859	E-50	41	RGS conduit	0.00	534.55	Pull rope	Soft-Fiber Polyester
1860	E-50	41	RGS conduit	0.00	534.55	Pull rope	Soft-Fiber Polyester
1861	E-50	41	RGS conduit	265.64	534.55	Pull rope	Soft-Fiber Polyester
						S-1032-2	3 + 1 gnd #6, #8, 600 V, RHH/RHW insulation
1862	E-50, E-51	41	RGS conduit	265.64	534.55	Pull rope	Soft-Fiber Polyester
						S-1032-2	3 + 1 gnd #6, #8, 600 V, RHH/RHW insulation
1863	E-51	41	RGS conduit	265.64	534.55	Pull rope	Soft-Fiber Polyester
						S-1032-S	3 + 1 gnd #6, #8, 600 V, RHH/RHW insulation
1864	E-51	41	RGS conduit	0.00	534.55	Pull rope	Soft-Fiber Polyester
1865	E-51	41	RGS conduit	0.00	534.55	Pull rope	Soft-Fiber Polyester
1900	E-50	41	RGS conduit	0.00	534.55	Pull rope	Soft-Fiber Polyester
1901	E-50	41	RGS conduit	0.00	534.55	Pull rope	Soft-Fiber Polyester
1902	E-50	41	RGS conduit	0.00	534.55	Pull rope	Soft-Fiber Polyester
1903	E-51	41	RGS conduit	0.00	534.55	Pull rope	Soft-Fiber Polyester
1904	E-51	41	RGS conduit	0.00	534.55	Pull rope	Soft-Fiber Polyester

CONDUIT DATA

Conduit No	Reference	Size	Type	Total Fill (mm²)	Allowable Fill (mm²)	Included Cable No.	Conductor Type
1905	E-51	41	RGS conduit	0.00	534.55	Pull rope	Soft-Fiber Polyester
1906	E-51	41	RGS conduit	0.00	534.55	Pull rope	Soft-Fiber Polyester
1907	E-51	41	RGS conduit	0.00	534.55	Pull rope	Soft-Fiber Polyester
1908	E-51	41	RGS conduit	0.00	534.55	Pull rope	Soft-Fiber Polyester
1950	E-50	41	RGS conduit	227.46	534.55	Pull rope	Soft-Fiber Polyester
						UP108-2	1-2/C + gnd #8, 600 V, EPR insulation
1951	E-50	41	RGS conduit	0.00	534.55	Pull rope	Soft-Fiber Polyester
1952	E-50	41	RGS conduit	0.00	534.55	Pull rope	Soft-Fiber Polyester
1953	E-51	41	RGS conduit	0.00	534.55	Pull rope	Soft-Fiber Polyester
1954	E-51	41	RGS conduit	0.00	534.55	Pull rope	Soft-Fiber Polyester
1955	E-51	41	RGS conduit	0.00	534.55	Pull rope	Soft-Fiber Polyester
1956	E-51	41	RGS conduit	0.00	534.55	Pull rope	Soft-Fiber Polyester
1957	E-51	41	RGS conduit	0.00	534.55	Pull rope	Soft-Fiber Polyester
1958	E-51	41	RGS conduit	0.00	534.55	Pull rope	Soft-Fiber Polyester
1T13	E-96, E-101	305	152.4 mm siderail ladder tray	2780.99	19354.80	1391	3-1/C #4/0 + 1/C #1/0 gnd, 15 kV, EPR insulation
						Pull rope	Soft-Fiber Polyester
1T14	E-128, E-19	305	152.4 mm siderail ladder tray	2780.99	8387.08	1391	3-1/C #4/0 + 1/C #1/0 gnd, 15 kV, EPR insulation
						Pull rope	Soft-Fiber Polyester
1T23	E-96, E-101	610	152.4 mm siderail ladder tray	14012.37	18064.48	UP105-4	1-2/C + gnd #8, 600 V, EPR insulation
						A-3010-1	1-3/C + gnd #2, 600 V, EPR insulation
						1115-2	1-3/C #16, 600 V, EPR insulation
						S-1031-1	1-3/C + gnd #2, 600 V, EPR insulation
						1115-1	1-3/C #14, 600 V, EPR insulation
						2201-1	1-2/C + gnd #8, 600 V, EPR insulation
						A-3009-3	1-3/C + gnd #6, 600 V, EPR insulation
						UP105-2	1-2/C + gnd #8, 600 V, EPR insulation
						1106	1-3/C + gnd #6, 600 V, EPR insulation
						S-3056-5	1-4/C #14, 600 V, EPR insulation
						S-3056-7	1-2/C #14, 600 V, EPR insulation
						S-3056-8	1-4/C #14, 600 V, EPR insulation
						Pull rope	Soft-Fiber Polyester
						A-3010-3	1-3/C #6 + gnd 600 V, RHH/RHW insulation
						S-3051-1	1-3/C + gnd #4, 600 V, EPR insulation
						UP108-3	1-2/C + gnd #8, 600 V, EPR insulation
						1255-1	1-3/C #16 ,600V, EPR insulation
						A-3001-1	1-3/C + gnd #4, 600 V, EPR insulation
						A-3012-1	1-3/C + gnd #2, 600 V, EPR insulation
						A-3013-1	1-3/C + gnd #2, 600 V, EPR insulation
						S-3022-1	1-3/C + gnd #2, 600 V, EPR insulation
						A-3002-1	1-3/C + gnd #4, 600 V, EPR insulation
						UP107-6	1-2/C + gnd #8, 600 V, EPR insulation

For continuation, see next sheet.

CONDUIT AND TRAY SCHEDULE

E-406

STATE OF CALIFORNIA - DEPARTMENT OF TRANSPORTATION
Caltrans

DESIGN OVERSIGHT
BEHZAD GOLEMOHAMMADI

CALCULATED/ DESIGNED BY	DATE 8/02	REVISED BY	DATE REVISED
PBP	8/02	AB	
CHECKED BY			

LAST REVISION 00-00-00
DATE PLOTTED => 4/4/2008
TIME PLOTTED => 5:04:48 PM

FOR REDUCED PLANS ORIGINAL SCALE IS IN MILLIMETERS 0 20 40 60 80

DGN FILE =>T:\13103\MS\pse\SAS Struc\CCO\SAS CCO42\04-0120f1_0361R01.dgn
USERNAME =>llorico

CU 04251

EA 0120F1

DIST	COUNTY	ROUTE	KILOMETER POST TOTAL PROJECT	SHEET No	TOTAL SHEETS
04	SF	80	13.2/13.9	370R1	1204

REQUEST FOR INFORMATION NOT ADDRESSED IN THIS CCO REMAIN IN FORCE

MARK	DATE	DESCRIPTIONS	BY	CH'D	CCO#
1	02/19/08	ELECTRICAL MODIFICATIONS	MP EL	RR	42

REVISIONS

CONTRACT CHANGE ORDER NO._____
SHEET _____ OF _____

REGISTERED PROFESSIONAL ENGINEER MAXWELL FUMIO TAKAKI No. E 8651 Exp. 9/30/2008 ELECTRICAL STATE OF CALIFORNIA

FOR REVISION ONLY

Caltrans Metric

12/19/02
REGISTERED ELECTRICAL ENGINEER DATE

REGISTERED PROFESSIONAL ENGINEER JENS ERLINGSSON No. 8249 Exp. 9/30/06 ELECTRICAL STATE OF CALIFORNIA

12-6-04
PLANS APPROVAL DATE

PB POWER, Inc.
A Parsons Brinckerhoff Company
303 Second St., Suite 700N
San Francisco, CA 94107-1317

The State of California or its officers or agents shall not be responsible for the accuracy or completeness of electronic copies of this plan sheet.

Caltrans now has a web site! To get to the web site, go to: http://www.dot.ca.gov

CONDUIT DATA

Conduit No	Reference	Size	Type	Total Fill (mm²)	Allowable Fill (mm²)	Included Cable No.	Conductor Type
2551	E-139	41	RGS conduit	212.85	534.55	LP223-2,4A	3 + 1 gnd #6,#8, 600 V, RHH/RHW insulation
2552	E-139	41	RGS conduit	212.85	534.55	LP223-2,4A	3 + 1 gnd #6,#8, 600 V, RHH/RHW insulation
2553	E-139	41	RGS conduit	212.85	534.55	LP223-2,4A	3 + 1 gnd #6,#8, 600 V, RHH/RHW insulation
2554	E-139	41	RGS conduit	212.85	534.55	LP223-2,4A	3 + 1 gnd #6,#8, 600 V, RHH/RHW insulation
2555	E-139	41	RGS conduit	212.85	534.55	LP223-2,4A	3 + 1 gnd #6,#8, 600 V, RHH/RHW insulation
2556	E-139	41	RGS conduit	212.85	534.55	LP223-6,8A	3 + 1 gnd #6,#8, 600 V, RHH/RHW insulation
2557	E-139	41	RGS conduit	212.85	534.55	LP223-6,8A	3 + 1 gnd #6,#8, 600 V, RHH/RHW insulation
2558	E-140	41	RGS conduit	212.85	534.55	LP223-6,8A	3 + 1 gnd #6,#8, 600 V, RHH/RHW insulation
2559	E-140	41	RGS conduit	212.85	534.55	LP223-6,8A	3 + 1 gnd #6,#8, 600 V, RHH/RHW insulation
2560	E-140	41	RGS conduit	212.85	534.55	LP223-6,8A	3 + 1 gnd #6,#8, 600 V, RHH/RHW insulation
2561	E-140	41	RGS conduit	212.85	534.55	LP223-6,8A	3 + 1 gnd #6,#8, 600 V, RHH/RHW insulation
2562	E-140	41	RGS conduit	212.85	534.55	LP223-6,8A	3 + 1 gnd #6,#8, 600 V, RHH/RHW insulation
2563	E-140	41	RGS conduit	212.85	534.55	LP223-6,8A	3 + 1 gnd #6,#8, 600 V, RHH/RHW insulation
2611	E-135	41	RGS conduit	0.00	534.55	Pull rope	Soft-Fiber Polyester
2612	E-135	41	RGS conduit	0.00	534.55	Pull rope	Soft-Fiber Polyester
2613	E-135	41	RGS conduit	0.00	534.55	Pull rope	Soft-Fiber Polyester
2614	E-136	41	RGS conduit	0.00	534.55	Pull rope	Soft-Fiber Polyester
2615	E-136	41	RGS conduit	0.00	534.55	Pull rope	Soft-Fiber Polyester
2616	E-136	41	RGS conduit	0.00	534.55	Pull rope	Soft-Fiber Polyester
2617	E-136	41	RGS conduit	0.00	534.55	Pull rope	Soft-Fiber Polyester
2618	E-137	41	RGS conduit	0.00	534.55	Pull rope	Soft-Fiber Polyester
2619	E-137	41	RGS conduit	0.00	534.55	Pull rope	Soft-Fiber Polyester
2620	E-137	41	RGS conduit	0.00	534.55	Pull rope	Soft-Fiber Polyester
2621	E-137	41	RGS conduit	0.00	534.55	Pull rope	Soft-Fiber Polyester
2622	E-138	41	RGS conduit	0.00	534.55	Pull rope	Soft-Fiber Polyester
2623	E-138	41	RGS conduit	0.00	534.55	Pull rope	Soft-Fiber Polyester
2624	E-138	41	RGS conduit	0.00	534.55	Pull rope	Soft-Fiber Polyester
2625	E-138	41	RGS conduit	0.00	534.55	Pull rope	Soft-Fiber Polyester
2626	E-139	41	RGS conduit	0.00	534.55	Pull rope	Soft-Fiber Polyester
2627	E-139	41	RGS conduit	0.00	534.55	Pull rope	Soft-Fiber Polyester
2628	E-139	41	RGS conduit	0.00	534.55	Pull rope	Soft-Fiber Polyester
2629	E-139	41	RGS conduit	0.00	534.55	Pull rope	Soft-Fiber Polyester
2630	E-139	41	RGS conduit	0.00	534.55	Pull rope	Soft-Fiber Polyester
2631	E-140	41	RGS conduit	0.00	534.55	Pull rope	Soft-Fiber Polyester
2637	E-138	41	RGS conduit	212.85	534.55	Pull rope	Soft-Fiber Polyester
2638	E-138	41	RGS conduit	212.85	534.55	A-2013-2	3 + 1 gnd #6,#8, 600 V, RHH/RHW insulation
2639	E-138	41	RGS conduit	212.85	534.55	A-2013-2	3 + 1 gnd #6,#8, 600 V, RHH/RHW insulation
2640	E-138	41	RGS conduit	212.85	534.55	A-2013-2	3 + 1 gnd #6,#8, 600 V, RHH/RHW insulation
2641	E-138	41	RGS conduit	212.85	534.55	A-2013-2	3 + 1 gnd #6,#8, 600 V, RHH/RHW insulation

CONDUIT DATA

Conduit No	Reference	Size	Type	Total Fill (mm²)	Allowable Fill (mm²)	Included Cable No.	Conductor Type
2642	E-138	41	RGS conduit	212.85	534.55	A-2013-2	3 + 1 gnd #6,#8, 600 V, RHH/RHW insulation
2643	E-138	41	RGS conduit	212.85	534.55	A-2013-2	3 + 1 gnd #6,#8, 600 V, RHH/RHW insulation
2644	E-138	41	RGS conduit	212.85	534.55	A-2013-2	3 + 1 gnd #6,#8, 600 V, RHH/RHW insulation
2645	E-138	41	RGS conduit	212.85	534.55	A-2013-2	3 + 1 gnd #6,#8, 600 V, RHH/RHW insulation
2646	E-138	41	RGS conduit	212.85	534.55	A-2013-2	3 + 1 gnd #6,#8, 600 V, RHH/RHW insulation
2647	E-139	41	RGS conduit	212.85	534.55	A-2013-2	3 + 1 gnd #6,#8, 600 V, RHH/RHW insulation
2648	E-139	41	RGS conduit	212.85	534.55	A-2013-2	3 + 1 gnd #6,#8, 600 V, RHH/RHW insulation
2649	E-139	41	RGS conduit	212.85	534.55	A-2013-2	3 + 1 gnd #6,#8, 600 V, RHH/RHW insulation
2650	E-139	41	RGS conduit	212.85	534.55	A-2014-2	3 + 1 gnd #6,#8, 600 V, RHH/RHW insulation
2651	E-139	41	RGS conduit	212.85	534.55	A-2014-2	3 + 1 gnd #6,#8, 600 V, RHH/RHW insulation
2652	E-139	41	RGS conduit	212.85	534.55	A-2014-2	3 + 1 gnd #6,#8, 600 V, RHH/RHW insulation
2653	E-139	41	RGS conduit	212.85	534.55	A-2014-2	3 + 1 gnd #6,#8, 600 V, RHH/RHW insulation
2654	E-139	41	RGS conduit	212.85	534.55	A-2014-2	3 + 1 gnd #6,#8, 600 V, RHH/RHW insulation
2655	E-139	41	RGS conduit	212.85	534.55	A-2014-2	3 + 1 gnd #6,#8, 600 V, RHH/RHW insulation
2656	E-139	41	RGS conduit	212.85	534.55	A-2014-2	3 + 1 gnd #6,#8, 600 V, RHH/RHW insulation
2657	E-139	41	RGS conduit	212.85	534.55	A-2014-2	3 + 1 gnd #6,#8, 600 V, RHH/RHW insulation
2658	E-140	41	RGS conduit	212.85	534.55	A-2014-2	3 + 1 gnd #6,#8, 600 V, RHH/RHW insulation
2659	E-140	41	RGS conduit	212.85	534.55	A-2014-2	3 + 1 gnd #6,#8, 600 V, RHH/RHW insulation
2660	E-140	41	RGS conduit	212.85	534.55	A-2014-2	3 + 1 gnd #6,#8, 600 V, RHH/RHW insulation
2661	E-140	41	RGS conduit	212.85	534.55	A-2014-2	3 + 1 gnd #6,#8, 600 V, RHH/RHW insulation
2662	E-140	41	RGS conduit	212.85	534.55	A-2014-2	3 + 1 gnd #6,#8, 600 V, RHH/RHW insulation
2663	E-140	41	RGS conduit	212.85	534.55	A-2014-2	3 + 1 gnd #6,#8, 600 V, RHH/RHW insulation
2664	E-135	41	RGS conduit	212.85	534.55	LP219-6,8A	3 + 1 gnd #6,#8, 600 V, RHH/RHW insulation
1 ~~2757~~							
2758	E-135	41	RGS conduit, PVC Coated				
2759	E-135	41	RGS conduit	440.31	534.55	A-3031-2	3 + 1 gnd #6,#8, 600 V, RHH/RHW insulation
						UP205-6	1-2/C + gnd #8,600 V, EPR insulation
						Pull rope	Soft-Fiber Polyester

For continuation, see next sheet.

CONDUIT AND TRAY SCHEDULE

E-415

STATE OF CALIFORNIA - DEPARTMENT OF TRANSPORTATION
Caltrans

DESIGN OVERSIGHT
BEHZAD GOLEMOHAMMADI

CALCULATED/ DESIGNED BY	DATE 8/02	REVISED BY	DATE REVISED
PBP	8/02		
CHECKED BY			

LAST REVISION 00-00-00
DATE PLOTTED => 4/4/2008
TIME PLOTTED => 5:05:10 PM

FOR REDUCED PLANS ORIGINAL SCALE IS IN MILLIMETERS 0 20 40 60 80

DGN FILE =>T:\13103\MS\pse\SAS Struc\CCO\SAS CCO42\04-0120f1_0370R01.dgn
USERNAME =>llorico

CU 04251

EA 0120F1

DIST	COUNTY	ROUTE	KILOMETER POST TOTAL PROJECT	SHEET No	TOTAL SHEETS
04	SF	80	13.2/13.9	371R1	1204

REGISTERED ELECTRICAL ENGINEER 12/19/02 DATE

12-6-04
PLANS APPROVAL DATE

REGISTERED PROFESSIONAL ENGINEER JENS ERLINGSSON No. 8249 Exp. 9/30/06 ELECTRICAL STATE OF CALIFORNIA

PB POWER, Inc.
A Parsons Brinckerhoff Company
303 Second St., Suite 700N
San Francisco, CA 94107-1317

The State of California or its officers or agents shall not be responsible for the accuracy or completeness of electronic copies of this plan sheet.

Caltrans now has a web site! To get to the web site, go to: http://www.dot.ca.gov

Caltrans Metric

REQUEST FOR INFORMATION NOT ADDRESSED IN THIS CCO REMAIN IN FORCE

MARK	DATE	DESCRIPTIONS	BY	CH'D	CCO#
1	02/19/08	ELECTRICAL MODIFICATIONS	MP EL	RR	42

REVISIONS

CONTRACT CHANGE ORDER NO._____
SHEET _____ OF _____

REGISTERED PROFESSIONAL ENGINEER MAXWELL FUMIO TAKAKI No. E 8651 Exp. 9/30/2008 ELECTRICAL STATE OF CALIFORNIA

FOR REVISION ONLY

CONDUIT DATA

Conduit No	Reference	Size	Type	Total Fill (mm²)	Allowable Fill (mm²)	Included Cable No.	Conductor Type
2760	E-135	41	RGS conduit	440.31	534.55	A-3031-2	3 + 1 gnd #6,#8, 600 V, RHH/RHW insulation
						UP205-6	1-2/C + gnd #8,600 V, EPR insulation
						Pull rope	Soft-Fiber Polyester
2761	E-135	41	RGS conduit	425.70	534.55	LP219-2,4A	3 + 1 gnd #6,#8, 600 V, RHH/RHW insulation
						Pull rope	Soft-Fiber Polyester
						A-3031-2	3 + 1 gnd #6,#8, 600 V, RHH/RHW insulation
2762	E-135	41	RGS conduit	212.85	534.55	Pull rope	Soft-Fiber Polyester
						A-3031-2	3 + 1 gnd #6,#8, 600 V, RHH/RHW insulation
2763	E-135	41	RGS conduit	212.85	534.55	Pull rope	Soft-Fiber Polyester
						A-3031-2	3 + 1 gnd #6,#8, 600 V, RHH/RHW insulation
2764	E-135	41	RGS conduit	212.85	534.55	Pull rope	Soft-Fiber Polyester
						A-3031-2	3 + 1 gnd #6,#8, 600 V, RHH/RHW insulation
2765	E-135	41	RGS conduit	212.85	534.55	Pull rope	Soft-Fiber Polyester
						A-3031-2	3 + 1 gnd #6,#8, 600 V, RHH/RHW insulation
2766	E-136	41	RGS conduit	212.85	534.55	Pull rope	Soft-Fiber Polyester
						A-3031-2	3 + 1 gnd #6,#8, 600 V, RHH/RHW insulation
2767	E-136	41	RGS conduit	0.00	534.55	Pull rope	Soft-Fiber Polyester
2768	E-136	41	RGS conduit	212.85	534.55	Pull rope	Soft-Fiber Polyester
						A-3032-2	3 + 1 gnd #6,#8, 600 V, RHH/RHW insulation
2769	E-136	41	RGS conduit	212.85	534.55	Pull rope	Soft-Fiber Polyester
						A-3032-2	3 + 1 gnd #6,#8, 600 V, RHH/RHW insulation
2770	E-136	41	RGS conduit	212.85	534.55	Pull rope	Soft-Fiber Polyester
						A-3032-2	3 + 1 gnd #6,#8, 600 V, RHH/RHW insulation
2771	E-136	41	RGS conduit	212.85	534.55	A-3032-2	3 + 1 gnd #6,#8, 600 V, RHH/RHW insulation
						Pull rope	Soft-Fiber Polyester
2772	E-136	41	RGS conduit	212.85	534.55	Pull rope	Soft-Fiber Polyester
						A-3032-2	3 + 1 gnd #6,#8, 600 V, RHH/RHW insulation
2773	E-136	41	RGS conduit	212.85	534.55	Pull rope	Soft-Fiber Polyester
						A-3033-2	3 + 1 gnd #6,#8, 600 V, RHH/RHW insulation
2774	E-136	53	RGS conduit	537.14	681.55	Pull rope	Soft-Fiber Polyester
						A-3040-3	1-3/C + gnd #6, 600 V, EPR insulation
						A-3033-2	3 + 1 gnd #6,#8, 600 V, RHH/RHW insulation
2775	E-136	53	RGS conduit	537.14	681.55	A-3033-2	3 + 1 gnd #6,#8, 600 V, RHH/RHW insulation
						A-3040-3	1-3/C + gnd #6, 600 V, EPR insulation
						Pull rope	Soft-Fiber Polyester
2776	E-136	41	RGS conduit	212.85	534.55	A-3033-2	3 + 1 gnd #6,#8, 600 V, RHH/RHW insulation
						Pull rope	Soft-Fiber Polyester
2777	E-136	41	RGS conduit	212.85	534.55	Pull rope	Soft-Fiber Polyester
						A-3033-2	3 + 1 gnd #6,#8, 600 V, RHH/RHW insulation
2778	E-137	41	RGS conduit	212.85	534.55	Pull rope	Soft-Fiber Polyester
						A-3033-2	3 + 1 gnd #6,#8, 600 V, RHH/RHW insulation
2779	E-137	41	RGS conduit	0.00	534.55	Pull rope	Soft-Fiber Polyester
2780	E-137	41	RGS conduit	425.70	534.55	LP221-2,4A	3 + 1 gnd #6,#8, 600 V, RHH/RHW insulation
						A-3034-2	3 + 1 gnd #6,#8, 600 V, RHH/RHW insulation
						Pull rope	Soft-Fiber Polyester
2781	E-137	41	RGS conduit	212.85	534.55	Pull rope	Soft-Fiber Polyester
						A-3034-2	3 + 1 gnd #6,#8, 600 V, RHH/RHW insulation
2782	E-137	41	RGS conduit	212.85	534.55	Pull rope	Soft-Fiber Polyester
						A-3034-2	3 + 1 gnd #6,#8, 600 V, RHH/RHW insulation
2783	E-137	41	RGS conduit	212.85	534.55	Pull rope	Soft-Fiber Polyester
						A-3034-2	3 + 1 gnd #6,#8, 600 V, RHH/RHW insulation
2784	E-137	41	RGS conduit	212.85	534.55	Pull rope	Soft-Fiber Polyester
						A-3034-2	3 + 1 gnd #6,#8, 600 V, RHH/RHW insulation

CONDUIT DATA

Conduit No	Reference	Size	Type	Total Fill (mm²)	Allowable Fill (mm²)	Included Cable No.	Conductor Type
2785	E-137	41	RGS conduit	0.00	534.55	Pull rope	Soft-Fiber Polyester
2786	E-137	41	RGS conduit	212.85	534.55	A-3035-2	3 + 1 gnd #6,#8, 600 V, RHH/RHW insulation
						Pull rope	Soft-Fiber Polyester
2787	E-137	41	RGS conduit	212.85	534.55	Pull rope	Soft-Fiber Polyester
						A-3035-2	3 + 1 gnd #6,#8, 600 V, RHH/RHW insulation
2788	E-137	41	RGS conduit	212.85	534.55	Pull rope	Soft-Fiber Polyester
						A-3035-2	3 + 1 gnd #6,#8, 600 V, RHH/RHW insulation
2789	E-138	41	RGS conduit	212.85	534.55	Pull rope	Soft-Fiber Polyester
						A-3035-2	3 + 1 gnd #6,#8, 600 V, RHH/RHW insulation
2790	E-138	41	RGS conduit	212.85	534.55	Pull rope	Soft-Fiber Polyester
						A-3035-2	3 + 1 gnd #6,#8, 600 V, RHH/RHW insulation
2791	E-138	41	RGS conduit	0.00	534.55	Pull rope	Soft-Fiber Polyester
2792	E-138	41	RGS conduit	212.85	534.55	A-3036-2	3 + 1 gnd #6,#8, 600 V, RHH/RHW insulation
						Pull rope	Soft-Fiber Polyester
2793	E-138	41	RGS conduit	212.85	534.55	A-3036-2	3 + 1 gnd #6,#8, 600 V, RHH/RHW insulation
						Pull rope	Soft-Fiber Polyester
2794	E-138	41	RGS conduit	212.85	534.55	Pull rope	Soft-Fiber Polyester
						A-3036-2	3 + 1 gnd #6,#8, 600 V, RHH/RHW insulation
2795	E-138	41	RGS conduit	425.70	534.55	Pull rope	Soft-Fiber Polyester
						A-3036-2	3 + 1 gnd #6,#8, 600 V, RHH/RHW insulation
						LP222-2,4A	3 + 1 gnd #6,#8, 600 V, RHH/RHW insulation
2796	E-138	41	RGS conduit	212.85	534.55	Pull rope	Soft-Fiber Polyester
						A-3036-2	3 + 1 gnd #6,#8, 600 V, RHH/RHW insulation
2797	E-138	41	RGS conduit	212.85	534.55	Pull rope	Soft-Fiber Polyester
						A-3036-2	3 + 1 gnd #6,#8, 600 V, RHH/RHW insulation
2798	E-138	41	RGS conduit	212.85	534.55	A-3036-2	3 + 1 gnd #6,#8, 600 V, RHH/RHW insulation
						Pull rope	Soft-Fiber Polyester
2799	E-138	41	RGS conduit	212.85	534.55	A-3036-2	3 + 1 gnd #6,#8, 600 V, RHH/RHW insulation
						Pull rope	Soft-Fiber Polyester
1 ~~2857~~							
2858	E-135	41	RGS conduit, PVC Coated				
2859	E-135	41	RGS conduit	212.85	534.55	Pull rope	Soft-Fiber Polyester
						A-2011-2	3 + 1 gnd #6,#8, 600 V, RHH/RHW insulation
2860	E-135	41	RGS conduit	0.00	534.55	Pull rope	Soft-Fiber Polyester
2861	E-135	41	RGS conduit	212.85	534.55	Pull rope	Soft-Fiber Polyester
						LP219-6,8A	3 + 1 gnd #6,#8, 600 V, RHH/RHW insulation

For continuation, see next sheet.

CONDUIT AND TRAY SCHEDULE

E-416

DATE	REVISED BY	REVISED
8/02	PBP	AB

CALCULATED/DESIGNED BY — CHECKED BY

DESIGN OVERSIGHT — BEHZAD GOLEMOHAMMADI

STATE OF CALIFORNIA - DEPARTMENT OF TRANSPORTATION
Caltrans

LAST REVISION 00-00-00 — DATE PLOTTED => 4/4/2008 TIME PLOTTED => 5:05:42 PM

DIST	COUNTY	ROUTE	KILOMETER POST TOTAL PROJECT	SHEET No	TOTAL SHEETS
04	SF	80	13.2/13.9	379R1	1204

REGISTERED ELECTRICAL ENGINEER 12/19/02 DATE

12-6-04
PLANS APPROVAL DATE

REGISTERED PROFESSIONAL ENGINEER JENS ERLINGSSON No. 8249 Exp. 9/30/06 ELECTRICAL STATE OF CALIFORNIA

PB POWER, Inc.
A Parsons Brinckerhoff Company
303 Second St., Suite 700N
San Francisco, CA 94107-1317

The State of California or its officers or agents shall not be responsible for the accuracy or completeness of electronic copies of this plan sheet.

Caltrans now has a web site! To get to the web site, go to: http://www.dot.ca.gov

Caltrans Metric

REQUEST FOR INFORMATION NOT ADDRESSED IN THIS CCO REMAIN IN FORCE

MARK	DATE	DESCRIPTIONS	BY	CH'D	CCO#
1	02/19/08	ELECTRICAL MODIFICATIONS	MP EL	RR	42

REVISIONS

CONTRACT CHANGE ORDER NO._____
SHEET _____ OF _____

REGISTERED PROFESSIONAL ENGINEER MANNELL FUMIO TAKAKI No. E 8651 Exp. 9/30/2008 ELECTRICAL STATE OF CALIFORNIA

FOR REVISION ONLY

CONDUIT DATA

Conduit No	Reference	Size	Type	Total Fill (mm²)	Allowable Fill (mm²)	Included Cable No.	Conductor Type
3163	E-229	40	Flexible nonmetallic conduit	425.70	511.11	Pull rope	Soft-Fiber Polyester
						A-3013-2	3 + 1 gnd #6,#8, 600 V, RHH/RHW insulation
						A-3012-2	3 + 1 gnd #6,#8, 600 V, RHH/RHW insulation
3164	E-228, E-229	40	Flexible nonmetallic conduit	425.70	511.11	A-3012-2	3 + 1 gnd #6,#8, 600 V, RHH/RHW insulation
						A-3013-2	3 + 1 gnd #6,#8, 600 V, RHH/RHW insulation
						Pull rope	Soft-Fiber Polyester
3165	E-228	40	Flexible nonmetallic conduit	425.70	511.11	A-3013-2	3 + 1 gnd #6,#8, 600 V, RHH/RHW insulation
						Pull rope	Soft-Fiber Polyester
						A-3012-2	3 + 1 gnd #6,#8, 600 V, RHH/RHW insulation
3166	E-228	40	Flexible nonmetallic conduit	425.70	511.11	A-3013-2	3 + 1 gnd #6,#8, 600 V, RHH/RHW insulation
						Pull rope	Soft-Fiber Polyester
						A-3012-2	3 + 1 gnd #6,#8, 600 V, RHH/RHW insulation
3167	E-228	40	Flexible nonmetallic conduit	425.70	511.11	Pull rope	Soft-Fiber Polyester
						A-3012-2	3 + 1 gnd #6,#8, 600 V, RHH/RHW insulation
						A-3013-2	3 + 1 gnd #6,#8, 600 V, RHH/RHW insulation
3168	E-228	40	Flexible nonmetallic conduit	212.85	511.11	A-3012-2	3 + 1 gnd #6,#8, 600 V, RHH/RHW insulation
						Pull rope	Soft-Fiber Polyester
3169	E-228	40	Flexible nonmetallic conduit	212.85	511.11	Pull rope	Soft-Fiber Polyester
						A-3012-2	3 + 1 gnd #6,#8, 600 V, RHH/RHW insulation
3170	E-228	40	Flexible nonmetallic conduit	212.85	511.11	Pull rope	Soft-Fiber Polyester
						A-3012-2	3 + 1 gnd #6,#8, 600 V, RHH/RHW insulation
3171	E-228	40	Flexible nonmetallic conduit	212.85	511.11	A-3012-2	3 + 1 gnd #6,#8, 600 V, RHH/RHW insulation
						Pull rope	Soft-Fiber Polyester
3172	E-228	40	Flexible nonmetallic conduit	212.85	511.11	A-3012-2	3 + 1 gnd #6,#8, 600 V, RHH/RHW insulation
						Pull rope	Soft-Fiber Polyester
3173	E-228	40	Flexible nonmetallic conduit	212.85	511.11	Pull rope	Soft-Fiber Polyester
						A-3012-2	3 + 1 gnd #6,#8, 600 V, RHH/RHW insulation
3174	E-228	40	Flexible nonmetallic conduit	212.85	511.11	A-3012-2	3 + 1 gnd #6,#8, 600 V, RHH/RHW insulation
						Pull rope	Soft-Fiber Polyester
3175	E-227, E-228	40	Flexible nonmetallic conduit	212.85	511.11	Pull rope	Soft-Fiber Polyester
						A-3012-2	3 + 1 gnd #6,#8, 600 V, RHH/RHW insulation
3176	E-227	40	Flexible nonmetallic conduit	212.85	511.11	Pull rope	Soft-Fiber Polyester
						A-3012-2	3 + 1 gnd #6,#8, 600 V, RHH/RHW insulation
3177	E-264, E-264A,	78	RGS-PVC coated conduit	1043.76	1935.24	2119-B	3+1 gnd, #250 kcmil, #1/0, 600 V, EPR insulation
1							
3177C	E-265	78	RGS-PVC coated conduit	1043.76	1935.24	2119-B	3+1 gnd, #250 kcmil, #1/0, 600 V, EPR insulation
3201	E-226	40	Flexible nonmetallic conduit	264.63	511.11	Pull rope	Soft-Fiber Polyester
						S-3056-12	2-1/C #14, 600 V, RHH/RHW insulation
						S-3051-2	3 + 1 gnd #6,#8, 600 V, RHH/RHW insulation
						S-3056-13	2-1/C #14, 600 V, RHH/RHW insulation
3202	E-226	40	Flexible nonmetallic conduit	264.63	511.11	S-3056-12	2-1/C #14, 600 V, RHH/RHW insulation
						S-3056-13	2-1/C #14, 600 V, RHH/RHW insulation
						Pull rope	Soft-Fiber Polyester
						S-3051-2	3 + 1 gnd #6,#8, 600 V, RHH/RHW insulation
3203	E-226	40	Flexible nonmetallic conduit	264.63	511.11	S-3056-13	2-1/C #14, 600 V, RHH/RHW insulation
						S-3051-2	3 + 1 gnd #6,#8, 600 V, RHH/RHW insulation
						S-3056-12	2-1/C #14, 600 V, RHH/RHW insulation
						Pull rope	Soft-Fiber Polyester
3204	E-226, E-227	40	Flexible nonmetallic conduit	451.59	511.11	S-3051-2	3 + 1 gnd #6,#8, 600 V, RHH/RHW insulation
						Pull rope	Soft-Fiber Polyester
						S-3056-12	2-1/C #14, 600 V, RHH/RHW insulation
						S-3056-3	3 + 1 gnd #6,#8, 600 V, RHH/RHW insulation
3205	E-227	40	Flexible nonmetallic conduit	451.59	511.11	S-3056-12	2-1/C #14, 600 V, RHH/RHW insulation
						Pull rope	Soft-Fiber Polyester
						S-3056-3	3 + 1 gnd #6,#8, 600 V, RHH/RHW insulation
						S-3051-2	3 + 1 gnd #6,#8, 600 V, RHH/RHW insulation

CONDUIT DATA

Conduit No	Reference	Size	Type	Total Fill (mm²)	Allowable Fill (mm²)	Included Cable No.	Conductor Type
3206	E-227	40	Flexible nonmetallic conduit	425.70	511.11	Pull rope	Soft-Fiber Polyester
						S-3056-3	3 + 1 gnd #6,#8, 600 V, RHH/RHW insulation
						S-3051-2	3 + 1 gnd #6,#8, 600 V, RHH/RHW insulation
3207	E-181, E-135	41	RGS-PVC coated conduit	264.63	534.55	S-3051-2	3 + 1 gnd #6,#8, 600 V, RHH/RHW insulation
						Pull rope	Soft-Fiber Polyester
						S-3056-13	2-1/C #14, 600 V, RHH/RHW insulation
						S-3056-12	2-1/C #14, 600 V, RHH/RHW insulation
3208	E-181	41	RGS-PVC coated conduit	464.20	534.55	S-3051-1	1-3/C + gnd #4 ,600 V, EPR insulation
						Pull rope	Soft-Fiber Polyester
						S-3056-6	1-4/C #14,600 V, EPR insulation
3209	E-181	41	RGS-PVC coated conduit	527.18	534.55	Pull rope	Soft-Fiber Polyester
						A-3041-1	1-3/C + gnd #2,600 V, EPR insulation
3210	E-181, E-135	41	RGS-PVC coated conduit	212.85	534.55	Pull rope	Soft-Fiber Polyester
						A-3041-2	3 + 1 gnd #6,#8, 600 V, RHH/RHW insulation
3211	E-226	41	RGS-PVC coated conduit	212.85	534.55	Pull rope	Soft-Fiber Polyester
						A-3041-2	3 + 1 gnd #6,#8, 600 V, RHH/RHW insulation
3212	E-226	40	Flexible nonmetallic conduit	212.85	511.11	A-3041-2	3 + 1 gnd #6,#8, 600 V, RHH/RHW insulation
						Pull rope	Soft-Fiber Polyester
3213	E-226	40	Flexible nonmetallic conduit	212.85	511.11	A-3041-2	3 + 1 gnd #6,#8, 600 V, RHH/RHW insulation
						Pull rope	Soft-Fiber Polyester
3214	E-226	40	Flexible nonmetallic conduit	212.85	511.11	A-3041-2	3 + 1 gnd #6,#8, 600 V, RHH/RHW insulation
						Pull rope	Soft-Fiber Polyester
3215	E-226	40	Flexible nonmetallic conduit	212.85	511.11	A-3041-2	3 + 1 gnd #6,#8, 600 V, RHH/RHW insulation
						Pull rope	Soft-Fiber Polyester
3216	E-226	40	Flexible nonmetallic conduit	212.85	511.11	A-3041-2	3 + 1 gnd #6,#8, 600 V, RHH/RHW insulation
						Pull rope	Soft-Fiber Polyester
3217	E-226	40	Flexible nonmetallic conduit	212.85	511.11	A-3041-2	3 + 1 gnd #6,#8, 600 V, RHH/RHW insulation
						Pull rope	Soft-Fiber Polyester
3218	E-226,E-227	40	Flexible nonmetallic conduit	212.85	511.11	A-3041-2	3 + 1 gnd #6,#8, 600 V, RHH/RHW insulation
						Pull rope	Soft-Fiber Polyester
3219	E-227	40	Flexible nonmetallic conduit	212.85	511.11	Pull rope	Soft-Fiber Polyester
						A-3041-2	3 + 1 gnd #6,#8, 600 V, RHH/RHW insulation
3220	E-227	40	Flexible nonmetallic conduit	212.85	511.11	A-3041-2	3 + 1 gnd #6,#8, 600 V, RHH/RHW insulation
						Pull rope	Soft-Fiber Polyester
3221	E-227	40	Flexible nonmetallic conduit	212.85	511.11	A-3041-2	3 + 1 gnd #6,#8, 600 V, RHH/RHW insulation
						Pull rope	Soft-Fiber Polyester

For continuation, see next sheet.

CONDUIT AND TRAY SCHEDULE

E-424

REVISED BY	DATE REVISED
PBP	8/02

CALCULATED/DESIGNED BY	CHECKED BY
AB	

DESIGN OVERSIGHT
BEHZAD GOLEMOHAMMADI

STATE OF CALIFORNIA - DEPARTMENT OF TRANSPORTATION
Caltrans

LAST REVISION 00-00-00
DATE PLOTTED => 4/4/2008
TIME PLOTTED => 5:06:06 PM

DIST	COUNTY	ROUTE	KILOMETER POST TOTAL PROJECT	SHEET No	TOTAL SHEETS
04	SF	80	13.2/13.9	381R1	1204

REQUEST FOR INFORMATION NOT ADDRESSED IN THIS CCO REMAIN IN FORCE

MARK	DATE	DESCRIPTIONS	BY	CH'D	CCO#
1	02/19/08	ELECTRICAL MODIFICATIONS	MP EL	RR	42

REVISIONS

CONTRACT CHANGE ORDER NO. _____
SHEET _____ OF _____

REGISTERED PROFESSIONAL ENGINEER MANNELL FUMIO TAKAKI No. E 8651 Exp. 9/30/2008 ELECTRICAL STATE OF CALIFORNIA

FOR REVISION ONLY

Caltrans Metric

Jens Erlingsson 12/19/02
REGISTERED ELECTRICAL ENGINEER DATE

REGISTERED PROFESSIONAL ENGINEER JENS ERLINGSSON No. 8249 Exp. 9/30/06 ELECTRICAL STATE OF CALIFORNIA

12-6-04
PLANS APPROVAL DATE

PB POWER, Inc.
A Parsons Brinckerhoff Company
303 Second St., Suite 700N
San Francisco, CA 94107-1317

The State of California or its officers or agents shall not be responsible for the accuracy or completeness of electronic copies of this plan sheet.

Caltrans now has a web site! To get to the web site, go to http://www.dot.ca.gov

CONDUIT DATA

Conduit No	Reference	Size	Type	Total Fill (mm²)	Allowable Fill (mm²)	Included Cable No.	Conductor Type
3256	E-229	40	Flexible nonmetallic conduit	425.70	511.11	A-3042-2	3 + 1 gnd #6,#8, 600 V, RHH/RHW insulation
						A-3043-2	3 + 1 gnd #6,#8, 600 V, RHH/RHW insulation
						Pull rope	Soft-Fiber Polyester
3257	E-229	40	Flexible nonmetallic conduit	425.70	511.11	A-3043-2	3 + 1 gnd #6,#8, 600 V, RHH/RHW insulation
						Pull rope	Soft-Fiber Polyester
						A-3042-2	3 + 1 gnd #6,#8, 600 V, RHH/RHW insulation
3258	E-229	40	Flexible nonmetallic conduit	425.70	511.11	A-3042-2	3 + 1 gnd #6,#8, 600 V, RHH/RHW insulation
						A-3043-2	3 + 1 gnd #6,#8, 600 V, RHH/RHW insulation
						Pull rope	Soft-Fiber Polyester
3259	E-229	40	Flexible nonmetallic conduit	425.70	511.11	A-3042-2	3 + 1 gnd #6,#8, 600 V, RHH/RHW insulation
						A-3043-2	3 + 1 gnd #6,#8, 600 V, RHH/RHW insulation
						Pull rope	Soft-Fiber Polyester
3260	E-229	40	Flexible nonmetallic conduit	425.70	511.11	A-3042-2	3 + 1 gnd #6,#8, 600 V, RHH/RHW insulation
						A-3043-2	3 + 1 gnd #6,#8, 600 V, RHH/RHW insulation
						Pull rope	Soft-Fiber Polyester
3261	E-229	40	Flexible nonmetallic conduit	425.70	511.11	A-3042-2	3 + 1 gnd #6,#8, 600 V, RHH/RHW insulation
						A-3043-2	3 + 1 gnd #6,#8, 600 V, RHH/RHW insulation
						Pull rope	Soft-Fiber Polyester
3262	E-229	40	Flexible nonmetallic conduit	425.70	511.11	A-3043-2	3 + 1 gnd #6,#8, 600 V, RHH/RHW insulation
						A-3042-2	3 + 1 gnd #6,#8, 600 V, RHH/RHW insulation
						Pull rope	Soft-Fiber Polyester
3263	E-229	40	Flexible nonmetallic conduit	425.70	511.11	A-3042-2	3 + 1 gnd #6,#8, 600 V, RHH/RHW insulation
						Pull rope	Soft-Fiber Polyester
						A-3043-2	3 + 1 gnd #6,#8, 600 V, RHH/RHW insulation
3264	E-228, E-229	40	Flexible nonmetallic conduit	425.70	511.11	A-3042-2	3 + 1 gnd #6,#8, 600 V, RHH/RHW insulation
						A-3043-2	3 + 1 gnd #6,#8, 600 V, RHH/RHW insulation
						Pull rope	Soft-Fiber Polyester
3265	E-228	40	Flexible nonmetallic conduit	425.70	511.11	A-3043-2	3 + 1 gnd #6,#8, 600 V, RHH/RHW insulation
						Pull rope	Soft-Fiber Polyester
						A-3042-2	3 + 1 gnd #6,#8, 600 V, RHH/RHW insulation
3266	E-228	40	Flexible nonmetallic conduit	425.70	511.11	A-3043-2	3 + 1 gnd #6,#8, 600 V, RHH/RHW insulation
						Pull rope	Soft-Fiber Polyester
						A-3042-2	3 + 1gnd #6,#8, 600 V, RHH/RHW insulation
3267	E-228	40	Flexible nonmetallic conduit	425.70	511.11	A-3042-2	3 + 1gnd #6,#8, 600 V, RHH/RHW insulation
						A-3043-2	3 + 1 gnd #6,#8, 600 V, RHH/RHW insulation
						Pull rope	Soft-Fiber Polyester
3268	E-228	40	Flexible nonmetallic conduit	212.85	511.11	Pull rope	Soft-Fiber Polyester
						A-3042-2	3 + 1 gnd #6,#8, 600 V, RHH/RHW insulation
3269	E-228	40	Flexible nonmetallic conduit	212.85	511.11	A-3042-2	3 + 1 gnd #6,#8, 600 V, RHH/RHW insulation
						Pull rope	Soft-Fiber Polyester
3270	E-228	40	Flexible nonmetallic conduit	212.85	511.11	A-3042-2	3 + 1 gnd #6,#8, 600 V, RHH/RHW insulation
						Pull rope	Soft-Fiber Polyester
3271	E-228	40	Flexible nonmetallic conduit	212.85	511.11	A-3042-2	3 + 1 gnd #6,#8, 600 V, RHH/RHW insulation
						Pull rope	Soft-Fiber Polyester
3272	E-228	40	Flexible nonmetallic conduit	212.85	511.11	Pull rope	Soft-Fiber Polyester
						A-3042-2	3 + 1 gnd #6,#8, 600 V, RHH/RHW insulation
3273	E-228	40	Flexible nonmetallic conduit	212.85	511.11	A-3042-2	3 + 1 gnd #6,#8, 600 V, RHH/RHW insulation
						Pull rope	Soft-Fiber Polyester
3274	E-228	40	Flexible nonmetallic conduit	212.85	511.11	A-3042-2	3 + 1 gnd #6,#8, 600 V, RHH/RHW insulation
						Pull rope	Soft-Fiber Polyester
3275	E-227, E-228	40	Flexible nonmetallic conduit	212.85	511.11	A-3042-2	3 + 1gnd #6,#8, 600 V, RHH/RHW insulation
						Pull rope	Soft-Fiber Polyester
3276	E-227	40	Flexible nonmetallic conduit	212.85	511.11	A-3042-2	3 + 1 gnd #6,#8, 600 V, RHH/RHW insulation
						Pull rope	Soft-Fiber Polyester
1 ~~3277~~							
3277A	E-265	27	RGS-PVC coated conduit	121.74	229.03	2119-2	4 pair #22, shielded pairs, 300 V, PE insulation

CONDUIT DATA

Conduit No	Reference	Size	Type	Total Fill (mm²)	Allowable Fill (mm²)	Included Cable No.	Conductor Type
3278	E-264, E-264A	103	RGS-PVC coated conduit	2820.14	3324.51	2123-2	1-3/C + gnd #2/0,600V, EPR insulation
						A-3057-1	1-3/C + gnd #2,600V, EPR insulation
						2123	1-3/C + gnd #2,600V, EPR insulation
						2123-3	1-3/C + gnd #2/0,600V, EPR insulation
1 3281	E-231	53	RGS-PVC coated conduit	625.60	879.42	A-3057-1	1-3/C + gnd #2,600V, RHH/RHW insulation
						UP210-5	2 + 1 gnd #12,600V, RHH/RHW insulation
						UP210-7	2 + 1 gnd #12,600V, RHH/RHW insulation
3281A	E-264	53	RGS-PVC coated conduit	625.60	879.42	A-3057-1	1-3/C + gnd #2,600V, RHH/RHW insulation
						UP210-5	2 + 1 gnd #12,600V, RHH/RHW insulation
						UP210-7	2 + 1 gnd #12,600V, RHH/RHW insulation
1							
3282	E-231	41	RGS-PVC coated conduit	425.70	534.55	A-3057-4	3 + 1 gnd #6,#8, 600 V, RHH/RHW insulation
						A-3057-3	3 + 1 gnd #6,#8, 600 V, RHH/RHW insulation
						Pull rope	Soft-Fiber Polyester
3283	E-231	41	RGS-PVC coated conduit	212.85	534.55	Pull rope	Soft-Fiber Polyester
						A-3057-4	3 + 1 gnd #6,#8, 600 V, RHH/RHW insulation
3285	E-231	41	RGS-PVC coated conduit	212.85	534.55	A-3057-3	3 + 1 gnd #6,#8, 600 V, RHH/RHW insulation
						Pull rope	Soft-Fiber Polyester
3286	E-231	41	RGS-PVC coated conduit	212.85	534.55	A-3057-3	3 + 1 gnd #6,#8, 600 V, RHH/RHW insulation
						Pull rope	Soft-Fiber Polyester
3287	E-231	41	RGS-PVC coated conduit	212.85	534.55	A-3057-3	3 + 1 gnd #6,#8, 600 V, RHH/RHW insulation
						Pull rope	Soft-Fiber Polyester
3288	E-231	41	RGS-PVC coated conduit	212.85	534.55	Pull rope	Soft-Fiber Polyester
						A-3057-3	3 + 1 gnd #6,#8, 600 V, RHH/RHW insulation
3290	E-231	41	RGS-PVC coated conduit	212.85	534.55	Pull rope	Soft-Fiber Polyester
						A-3057-4	3 + 1 gnd #6,#8, 600 V, RHH/RHW insulation
3291	E-231	41	RGS-PVC coated conduit	212.85	534.55	Pull rope	Soft-Fiber Polyester
						A-3057-4	3 + 1 gnd #6,#8, 600 V, RHH/RHW insulation
3292	E-231	41	RGS-PVC coated conduit	212.85	534.55	Pull rope	Soft-Fiber Polyester
						A-3057-4	3 + 1 gnd #6,#8, 600 V, RHH/RHW insulation
3293	E-231	41	RGS-PVC coated conduit	212.85	534.55	A-3057-4	3 + 1 gnd #6,#8, 600 V, RHH/RHW insulation
						Pull rope	Soft-Fiber Polyester
3294	E-264, E-264A	41	RGS-PVC coated conduit	170.36	534.55	2120-1	1-3/C #14,600 V, EPR insulation
						2120-2	1-3/C #14,600 V, EPR insulation
1 3295	E-287	53	RGS-PVC coated conduit	754.18	1255.65	Pull rope	Soft-Fiber Polyester
						2120	1-3/C + gnd #1/0,600 V, EPR insulation
3297	E-264, E-264A	27	RGS-PVC coated conduit	121.74	229.03	2119-2	4 pair #22, shielded pairs, 300 V, PE insulation

For continuation, see next sheet.

CONDUIT AND TRAY SCHEDULE

E-426

REVISED BY	DATE REVISED
PBP	DATE 8/02

CALCULATED/DESIGNED BY	CHECKED BY
AB	8/02

DESIGN OVERSIGHT
BEHZAD GOLEMOHAMMADI

STATE OF CALIFORNIA - DEPARTMENT OF TRANSPORTATION
Caltrans

LAST REVISION 00-00-00
DATE PLOTTED => 4/4/2008
TIME PLOTTED => 5:06:42 PM

DIST	COUNTY	ROUTE	KILOMETER POST TOTAL PROJECT	SHEET No	TOTAL SHEETS
04	SF	80	13.2/13.9	382R1	1204

REGISTERED ELECTRICAL ENGINEER 12/19/02 DATE

12-6-04
PLANS APPROVAL DATE

REGISTERED PROFESSIONAL ENGINEER JENS ERLINGSSON No. 8249 Exp. 9/30/06 ELECTRICAL STATE OF CALIFORNIA

PB POWER, Inc.
A Parsons Brinckerhoff Company
303 Second St., Suite 700N
San Francisco, CA 94107-1317

The State of California or its officers or agents shall not be responsible for the accuracy or completeness of electronic copies of this plan sheet.

Caltrans now has a web site! To get to the web site, go to http://www.dot.ca.gov

REQUEST FOR INFORMATION NOT ADDRESSED IN THIS CCO REMAIN IN FORCE

MARK	DATE	DESCRIPTIONS	BY	CH'D	CCO#
1	02/19/08	ELECTRICAL MODIFICATIONS	MP EL	RR	42

REVISIONS

CONTRACT CHANGE ORDER NO._____
SHEET _____ OF _____

REGISTERED PROFESSIONAL ENGINEER MAXWELL FUMIO TAKAKI No. E 8651 Exp. 9/30/2008 ELECTRICAL STATE OF CALIFORNIA

FOR REVISION ONLY

Caltrans Metric

CONDUIT DATA

Conduit No	Reference	Size	Type	Total Fill (mm2)	Allowable Fill (mm2)	Included Cable No.	Conductor Type
3298	E-265	53	RGS-PVC coated conduit	102.61	879.42	Pull rope	Soft-Fiber Polyester
						UP210-9	1-3/C #12,600 V, EPR insulation
3311	E-265	53	RGS conduit	0.00	879.42	Pull rope	Soft-Fiber Polyester
3316	E-264	53	RGS conduit	192.46	879.42	Pull rope	Soft-Fiber Polyester
						UP210-2	2 + 1 gnd #8,#10, 600 V, RHH/RHW insulation
						UP210-4	2 + 1 gnd #8,#10, 600 V, RHH/RHW insulation
3316A	E-266	53	RGS conduit	192.46	879.42	Pull rope	Soft-Fiber Polyester
						UP210-2	2 + 1 gnd #8,#10, 600 V, RHH/RHW insulation
						UP210-4	2 + 1 gnd #8,#10, 600 V, RHH/RHW insulation
3318	E-264, E264A	78	RGS-PVC coated conduit	0.00	1935.24	Pull rope	Soft-Fiber Polyester
3319	E-264, E-264A	78	RGS-PVC coated conduit	1678.72	1935.24	2121	1-3/C + gnd #1/0,600 V, EPR insulation
						2120	1-3/C + gnd #1/0,600 V, EPR insulation
						2121-1	1-3/C #14,600 V, EPR insulation
						2121-2	1-3/C #14,600 V, EPR insulation
3320	E-264, E-265	53	RGS-PVC coated conduit	754.18	879.42	2120	1-3/C + gnd #1/0,600 V, EPR insulation
						Pull rope	Soft-Fiber Polyester
3320A	E-287	53	RGS-PVC coated conduit	754.18	879.42	2120	1-3/C + gnd #1/0,600 V, EPR insulation
						Pull rope	Soft-Fiber Polyester

CONDUIT DATA

Conduit No	Reference	Size	Type	Total Fill (mm2)	Allowable Fill (mm2)	Included Cable No.	Conductor Type
3322	E-264, E-264A	78	RGS-PVC coated conduit	1043.76	1935.24	2119-A	3+1 gnd, #250 kcmil, #1/0, 600 V, EPR insulation
						Pull rope	Soft-Fiber Polyester
3322C	E-265	78	RGS-PVC coated conduit	1043.76	1935.24	2119-A	3+1 gnd, #250 kcmil, #1/0, 600 V, EPR insulation
						Pull rope	Soft-Fiber Polyester
3323	E-264	78	RGS-PVC coated conduit	924.54	1935.24	2121-2	1-3/C #14,600 V, EPR insulation
						2121-1	1-3/C #14,600 V, EPR insulation
						Pull rope	Soft-Fiber Polyester
						2121	1-3/C + gnd #1/0,600 V, EPR insulation
3323A	E-286, E-287	78	RGS-PVC coated conduit	924.54	1935.24	2121-2	1-3/C #14,600 V, EPR insulation
						2121-1	1-3/C #14,600 V, EPR insulation
						Pull rope	Soft-Fiber Polyester
						2121	1-3/C + gnd #1/0,600 V, EPR insulation
3329	E-265	53	RGS-PVC coated conduit	0.00	879.42	Pull rope	Soft-Fiber Polyester
3330	E-264A, E-281	41	RGS-PVC coated conduit	384.80	534.55	CCTVE01BA	TVP
						CCTVE01BB	TVCP
						CCTVE01AA	TVP
						CCTVE01AB	TVCP
3330C	E-281	41	RGS-PVC coated conduit	192.4	534.55	CCTVE01AA	TVP
						CCTVE01AB	TVCP
3330D	E-281	41	RGS-PVC coated conduit	192.4	534.55	CCTVE01BA	TVP
						CCTVE01BB	TVCP
3330E	E-281	41	RGS-PVC coated conduit	192.4	534.55	CCTVE01AA	TVP
						CCTVE01AB	TVCP
3330F	E-281	41	RGS-PVC coated conduit	192.4	534.55	CCTVE01BA	TVP
						CCTVE01BB	TVCP
3332	E-264	78	RGS-PVC coated conduit	0.00	1935.24	Pull rope	Soft-Fiber Polyester
3333	E-264	78	RGS-PVC coated conduit	1375.59	1935.24	Pull rope	Soft-Fiber Polyester
						UP210-11	2 + 1 gnd #8,#10, 600 V, RHH/RHW insulation
						UP210-10	2 + 1 gnd #8,#10, 600 V, RHH/RHW insulation
						2123	1-3/C + gnd #2,600 V, EPR insulation
						UP210-9	2 + 1 gnd #12,#12, 600 V, RHH/RHW insulation
3337	E-264	53	RGS-PVC coated conduit	145.44	879.42	UP210-8	2 + 1 gnd #8,#10, 600 V, RHH/RHW insulation
						Pull rope	Soft-Fiber Polyester
						UP210-6	2 + 1 gnd #8,#10, 600 V, RHH/RHW insulation
3337A	E-266	53	RGS-PVC coated conduit	145.44	879.42	UP210-8	2 + 1 gnd #8,#10, 600 V, RHH/RHW insulation
						Pull rope	Soft-Fiber Polyester
						UP210-6	2 + 1 gnd #8,#10, 600 V, RHH/RHW insulation

For continuation, see next sheet.

CONDUIT AND TRAY SCHEDULE

E-427

REVISED BY	DATE REVISED
PBP	8/02

CALCULATED/DESIGNED BY	CHECKED BY
AB	

DESIGN OVERSIGHT
BEHZAD GOLEMOHAMMADI

STATE OF CALIFORNIA - DEPARTMENT OF TRANSPORTATION
Caltrans

LAST REVISION 00-00-00
DATE PLOTTED => 4/4/2008
TIME PLOTTED => 5:07:35 PM

DIST	COUNTY	ROUTE	KILOMETER POST TOTAL PROJECT	SHEET No	TOTAL SHEETS
04	SF	80	13.2/13.9	383R1	1204

REGISTERED ELECTRICAL ENGINEER 12/19/02 DATE

12-6-04
PLANS APPROVAL DATE

REGISTERED PROFESSIONAL ENGINEER JENS ERLINGSSON No. 8249 Exp. 9/30/06 ELECTRICAL STATE OF CALIFORNIA

PB POWER, Inc.
A Parsons Brinckerhoff Company
303 Second St., Suite 700N
San Francisco, CA 94107-1317

The State of California or its officers or agents shall not be responsible for the accuracy or completeness of electronic copies of this plan sheet.

Caltrans now has a web site! To get to the web site, go to http://www.dot.ca.gov

Caltrans Metric

REQUEST FOR INFORMATION NOT ADDRESSED IN THIS CCO REMAIN IN FORCE

MARK	DATE	DESCRIPTIONS	BY	CH'D	CCO#
1	02/19/08	ELECTRICAL MODIFICATIONS	MP EL	RR	42

REVISIONS

CONTRACT CHANGE ORDER NO._____
SHEET _____ OF _____

REGISTERED PROFESSIONAL ENGINEER MAXWELL FUMIO TAKAKI No. E 8651 Exp. 9/30/2008 ELECTRICAL STATE OF CALIFORNIA

FOR REVISION ONLY

CONDUIT DATA

Conduit No	Reference	Size	Type	Total Fill (mm²)	Allowable Fill (mm²)	Included Cable No.	Conductor Type
3339	E-264, E-264A	78	RGS-PVC coated conduit	1043.76	1935.24	2125	3+1 gnd, #250 kcmil, #1/0,600 V,EPR insulation
3345	E-264	53	RGS-PVC coated conduit	454.92	879.42	Pull rope	Soft-Fiber Polyester
						UP210-10	1-2/C + gnd #8,600 V, EPR insulation
						UP210-11	1-2/C + gnd #8,600 V, EPR insulation
3348	E-264A, E-281	41	RGS-PVC coated conduit	300.88	534.55	MVDSE02A	MVDS DLC
						MVDSW03A	MVDS DLC
3349	E-264A, E-281	41	RGS-PVC coated conduit	173.82	534.55	CCTVE01BC	TVC
						CCTVE01BD	TVL
1 3349C	E-281	41	RGS-PVC coated conduit	173.82	534.55	CCTVE01BC	TVC
						CCTVE01BD	TVL
3350	E-285	78	RGS-PVC coated conduit	2093.43	2564.19	2123-3	1-3/C + gnd #2/0,600 V, EPR insulation
						UP210-1B-14	2 + 1 gnd #8,#10, 600 V, RHH/RHW insulation
						Pull rope	Soft-Fiber Polyester
						UP210-1B-13	2 + 1 gnd #8,#10, 600 V, RHH/RHW insulation
3351	E-285	53	RGS-PVC coated conduit	882.89	879.42	Pull rope	Soft-Fiber Polyester
						2123-3	1-3/C + gnd #2/0,600 V, EPR insulation
1 3351A	E-264	53	RGS-PVC coated conduit	882.89	879.42	Pull rope	Soft-Fiber Polyester
						2123-3	1-3/C + gnd #2/0,600 V, EPR insulation
3353	E-285	78	RGS-PVC coated conduit	436.32	1935.24	UP210-1B-12	2 + 1 gnd #12,#12, 600 V, RHH/RHW insulation
						Pull rope	Soft-Fiber Polyester
						UP210-1B-10	2 + 1 gnd #12,#12, 600 V, RHH/RHW insulation
						UP210-1B-8	2 + 1 gnd #12,#12, 600 V, RHH/RHW insulation
3354	E-285	78	RGS-PVC coated conduit	436.32	1935.24	UP210-1B-11	2 + 1 gnd #8,#10, 600 V, RHH/RHW insulation
						UP210-1B-7	2 + 1 gnd #8,#10, 600 V, RHH/RHW insulation
						UP210-1B-9	2 + 1 gnd #8,#10, 600 V, RHH/RHW insulation
						Pull rope	Soft-Fiber Polyester

CONDUIT DATA

Conduit No	Reference	Size	Type	Total Fill (mm²)	Allowable Fill (mm²)	Included Cable No.	Conductor Type
3357	E-285	78	RGS-PVC coated conduit	436.32	1935.24	UP210-1B-5	2 + 1 gnd #8,#10, 600 V, RHH/RHW insulation
						Pull rope	Soft-Fiber Polyester
						UP210-1B-1	2 + 1 gnd #8,#10, 600 V, RHH/RHW insulation
						UP210-1B-3	2 + 1 gnd #8,#10, 600 V, RHH/RHW insulation
3358	E-285	78	RGS-PVC coated conduit	436.32	1935.24	UP210-1B-2	2 + 1 gnd #12,#12, 600 V, RHH/RHW insulation
						UP210-1B-6	2 + 1 gnd #12,#12, 600 V, RHH/RHW insulation
						UP210-1B-4	2 + 1 gnd #12,#12, 600 V, RHH/RHW insulation
						Pull rope	Soft-Fiber Polyester
3359	E-264A,E-281	41	RGS-PVC coated conduit	173.82	534.55	CCTVE01AC	TVC
						CCTVE01AD	TVL
1 3359C	E-281	41	RGS-PVC coated conduit	173.82	534.55	CCTVE01AC	TVC
						CCTVE01AD	TVL
3362	E-285	78	RGS-PVC coated conduit	2081.18	2564.19	2123-2	1-3/C + gnd #2/0,600 V, EPR insulation
						Pull rope	Soft-Fiber Polyester
3364	E-285, E-264	53	RGS-PVC coated conduit	979.12	879.42	2123-2	1-3/C + gnd #2/0,600 V, EPR insulation
						Pull rope	Soft-Fiber Polyester
1 3364A	E-264	53	RGS-PVC coated conduit	979.12	879.42	2123-2	1-3/C + gnd #2/0,600 V, EPR insulation
						Pull rope	Soft-Fiber Polyester

For continuation, see next sheet.

CONDUIT AND TRAY SCHEDULE

E-428

DATE	BY	REVISED	DATE	REVISED
8/02	AB			

CALCULATED/DESIGNED BY PBP
CHECKED BY

DESIGN OVERSIGHT
BEHZAD GOLEMOHAMMADI

STATE OF CALIFORNIA - DEPARTMENT OF TRANSPORTATION
Caltrans

LAST REVISION 00-00-00
DATE PLOTTED => 4/4/2008
TIME PLOTTED => 5:09:10 PM

FOR REDUCED PLANS ORIGINAL SCALE IS IN MILLIMETERS 0 20 40 60 80

DGN FILE =>T:\13103\MS\pse\SAS Struc\CCO\SAS CCO42\04-0120f1_0383R01.dgn
USERNAME =>llorico

CU 04251

EA 0120F1

DIST	COUNTY	ROUTE	KILOMETER POST TOTAL PROJECT	SHEET No	TOTAL SHEETS
04	SF	80	13.2/13.9	384R1	1204

REQUEST FOR INFORMATION NOT ADDRESSED IN THIS CCO REMAIN IN FORCE

MARK	DATE	DESCRIPTIONS	BY	CH'D	CCO#
1	02/19/08	ELECTRICAL MODIFICATIONS	MP EL	RR	42

REVISIONS

CONTRACT CHANGE ORDER NO. _____
SHEET _____ OF _____

REGISTERED PROFESSIONAL ENGINEER MAXWELL FUMIO TAKAKI No. E 8651 Exp. 9/30/2008 ELECTRICAL STATE OF CALIFORNIA

FOR REVISION ONLY

Caltrans Metric

Jens Erlingsson 12/19/02
REGISTERED ELECTRICAL ENGINEER DATE

REGISTERED PROFESSIONAL ENGINEER JENS ERLINGSSON No. 8249 Exp. 9/30/06 ELECTRICAL STATE OF CALIFORNIA

12-6-04
PLANS APPROVAL DATE

PB POWER, Inc.
A Parsons Brinckerhoff Company
303 Second St., Suite 700N
San Francisco, CA 94107-1317

The State of California or its officers or agents shall not be responsible for the accuracy or completeness of electronic copies of this plan sheet.

Caltrans now has a web site! To get to the web site, go to http://www.dot.ca.gov

CONDUIT DATA

Conduit No	Reference	Size	Type	Total Fill (mm²)	Allowable Fill (mm²)	Included Cable No.	Conductor Type
3365	E-285	78	RGS-PVC coated conduit	520.30	1935.24	Pull rope	Soft-Fiber Polyester
						UP210-1A-3	2 + 1 gnd #8,#10, 600 V, RHH/RHW insulation
						UP210-1A-1	3 + 1 gnd #8,#10, 600 V, RHH/RHW insulation
						UP210-1A-5	2 + 1 gnd #8,#10, 600 V, RHH/RHW insulation
3367	E-285	78	RGS-PVC coated conduit	520.30	1935.24	UP210-1A-4	2 + 1 gnd #8,#10, 600 V, RHH/RHW insulation
						UP210-1A-2	2 + 1 gnd #12,#12, 600 V, RHH/RHW insulation
						UP210-1A-6	2 + 1 gnd #12,#12, 600 V, RHH/RHW insulation
						Pull rope	Soft-Fiber Polyester
3368	E-285	78	RGS-PVC coated conduit	436.32	1935.24	UP210-1A-7	2 + 1 gnd #8,#10, 600 V, RHH/RHW insulation
						UP210-1A-9	2 + 1 gnd #8,#10, 600 V, RHH/RHW insulation
						UP210-1A-11	2 + 1 gnd #8,#10, 600 V, RHH/RHW insulation
						Pull rope	Soft-Fiber Polyester
3369	E-285	78	RGS-PVC coated conduit	436.32	1935.24	UP210-1A-12	2 + 1 gnd #12,#12, 600 V, RHH/RHW insulation
						UP210-1A-10	2 + 1 gnd #12,#12, 600 V, RHH/RHW insulation
						Pull rope	Soft-Fiber Polyester
						UP210-1A-8	2 + 1 gnd #12,#12, 600 V, RHH/RHW insulation
3393	E-287	78	RGS-PVC coated conduit	924.54	1935.24	2121	1-3/C + gnd #1/0,600 V, EPR insulation
						2121-2	1-3/C #14,600 V, EPR insulation
						2121-1	1-3/C #14,600 V, EPR insulation
3398	E-265	53	RGS-PVC coated conduit	0.00	879.42	Pull rope	Soft-Fiber Polyester
3399	E-287 (1)	41	RGS-PVC coated conduit	170.36	534.55	2120-1	1-3/C #14,600 V, EPR insulation
						Pull rope	Soft-Fiber Polyester
						2120-2	1-3/C #14,600 V, EPR insulation

CONDUIT DATA

Conduit No	Reference	Size	Type	Total Fill (mm²)	Allowable Fill (mm²)	Included Cable No.	Conductor Type
3448	E-285 (1)	53	RGS-PVC coated conduit	241.67	879.42	Pull rope	Soft-Fiber Polyester
						UP210-1B-16	2 + 1 gnd #8,#10, 600 V, RHH/RHW insulation
						UP210-1B-15	2 + 1 gnd #8,#10, 600 V, RHH/RHW insulation
(1) 3448A	E-286	53					

For continuation, see next sheet.

CONDUIT AND TRAY SCHEDULE

E-429

STATE OF CALIFORNIA - DEPARTMENT OF TRANSPORTATION
Caltrans

DESIGN OVERSIGHT
BEHZAD GOLEMOHAMMADI

CALCULATED/DESIGNED BY PBP
CHECKED BY AB
DATE 8/02 8/02
REVISED BY DATE REVISED

LAST REVISION 00-00-00
DATE PLOTTED => 4/4/2008
TIME PLOTTED => 5:10:48 PM

FOR REDUCED PLANS ORIGINAL SCALE IS IN MILLIMETERS 0 20 40 60 80

DGN FILE =>T:\13103\MS\pse\SAS Struc\CCO\SAS CC042\04-0120f1_0384R01.dgn
USERNAME =>llorico

CU 04251

EA 0120F1

DIST	COUNTY	ROUTE	KILOMETER POST TOTAL PROJECT	SHEET No	TOTAL SHEETS
04	SF	80	13.2/13.9	385R1	1204

REQUEST FOR INFORMATION NOT ADDRESSED IN THIS CCO REMAIN IN FORCE

MARK	DATE	DESCRIPTIONS	BY	CH'D	CCO#
1	02/19/08	ELECTRICAL MODIFICATIONS	MP EL	RR	42

REVISIONS

CONTRACT CHANGE ORDER NO._____
SHEET _____ OF _____

REGISTERED PROFESSIONAL ENGINEER MAXWELL FUMIO TAKAKI No. E 8651 Exp. 9/30/2008 ELECTRICAL STATE OF CALIFORNIA

FOR REVISION ONLY

Caltrans Metric

Jens Erlingsson 12/19/02
REGISTERED ELECTRICAL ENGINEER DATE

12-6-04
PLANS APPROVAL DATE

REGISTERED PROFESSIONAL ENGINEER JENS ERLINGSSON No. 8249 Exp. 9/30/06 ELECTRICAL STATE OF CALIFORNIA

PB POWER, Inc.
A Parsons Brinckerhoff Company
303 Second St., Suite 700N
San Francisco, CA 94107-1317

The State of California or its officers or agents shall not be responsible for the accuracy or completeness of electronic copies of this plan sheet.

Caltrans now has a web site! To get to the web site, go to http://www.dot.ca.gov

CONDUIT DATA

Conduit No	Reference	Size	Type	Total Fill (mm²)	Allowable Fill (mm²)	Included Cable No.	Conductor Type
3459	E-264	41	RGS-PVC coated conduit	102.61	534.55	Pull rope	Soft-Fiber Polyester
						UP210-9	2 + 1 gnd #12,#12, 600 V, RHH/RHW insulation
3459A	E-265	41					
3464	E-285	53	RGS-PVC coated conduit	145.44	879.42	UP210-1A-14	2 + 1 gnd #12,#12, 600 V, RHH/RHW insulation
						UP210-1A-13	2 + 1 gnd #8,#10, 600 V, RHH/RHW insulation
3464A	E-286	53					
3500	E-284, E-274	53	RGS-PVC coated conduit	471.09	879.42	UP210-1A-1	3 + 1 gnd #8,#10, 600 V, RHH/RHW insulation
						UP210-1A-1C	2 + 1 gnd #8, #10, 600 V, RHH/RHW insulation
						Pull rope	Soft-Fiber Polyester
						UP210-1A-2	2 + 1 gnd #12,#12, 600 V, RHH/RHW insulation
3501	E-282	53	RGS-PVC coated conduit	567.32	879.42	UP210-1A-1A	3 + 1 gnd #8,#10, 600 V, RHH/RHW insulation
						UP210-1A-2	2 + 1 gnd #12,#12, 600 V, RHH/RHW insulation
						UP210-1A-1C	2 + 1 gnd #8, #10, 600 V, RHH/RHW insulation
						Pull rope	Soft-Fiber Polyester
3502	E-284, E-274	78	RGS-PVC coated conduit	520.30	1935.24	UP210-1A-1B	3 + 1 gnd #8,#10, 600 V, RHH/RHW insulation
						UP210-1A-2	2 + 1 gnd #12,#12, 600 V, RHH/RHW insulation
						UP210-1A-1C	2 + 1 gnd #8, #10, 600 V, RHH/RHW insulation
						Pull rope	Soft-Fiber Polyester
3503	E-284, E-274	53	RGS-PVC coated conduit	808.99	879.42	Pull rope	Soft-Fiber Polyester
						UP210-1A-3C	2 + 1 gnd #8,#10, 600 V, RHH/RHW insulation
						UP210-1A-3	2 + 1 gnd #8,#10, 600 V, RHH/RHW insulation
						UP210-1A-4	2 + 1 gnd #8,#10, 600 V, RHH/RHW insulation
3504	E-282, E-284, E-285	53	RGS-PVC coated conduit	520.30	879.42	UP210-1A-3C	3 + 1 gnd #8,#10, 600 V, RHH/RHW insulation
						Pull rope	Soft-Fiber Polyester
						UP210-1A-3A	2 + 1 gnd #8,#10, 600 V, RHH/RHW insulation
						UP210-1A-4	2 + 1 gnd #8,#10, 600 V, RHH/RHW insulation
3505	E-284, E-274	53	RGS-PVC coated conduit	352.55	879.42	UP210-1A-4	2 + 1 gnd #12,#12, 600 V, RHH/RHW insulation
						UP210-1A-3C	3 + 1 gnd #8,#10, 600 V, RHH/RHW insulation
						Pull rope	Soft-Fiber Polyester
						UP210-1A-3B	2 + 1 gnd #8,#10, 600 V, RHH/RHW insulation
3506	E-284, E-274	53	RGS-PVC coated conduit	241.67	879.42	UP210-1A-5	2 + 1 gnd #8,#10, 600 V, RHH/RHW insulation
						UP210-1A-5C	2 + 1 gnd #8,#10, 600 V, RHH/RHW insulation
						UP210-1A-6	2 + 1 gnd #12,#12, 600 V, RHH/RHW insulation
3507	E-284, E-274	53	RGS-PVC coated conduit	241.67	879.42	UP210-1A-6	2 + 1 gnd #12,#12, 600 V, RHH/RHW insulation
						UP210-1A-5A	2 + 1 gnd #8,#10, 600 V, RHH/RHW insulation
						UP210-1A-5C	2 + 1 gnd #8,#10, 600 V, RHH/RHW insulation
3508	E-284, E-274	53	RGS-PVC coated conduit	241.67	879.42	UP210-1A-5B	2 + 1 gnd #8,#10, 600 V, RHH/RHW insulation
						UP210-1A-5C	2 + 1 gnd #8,#10, 600 V, RHH/RHW insulation
						UP210-1A-6	2 + 1 gnd #12,#12, 600 V, RHH/RHW insulation
3600	E-284, E-274	53	RGS-PVC coated conduit	387.11	879.42	UP210-1A-7	2 + 1 gnd #8,#10, 600 V, RHH/RHW insulation
						UP210-1A-7C	2 + 1 gnd #8,#10, 600 V, RHH/RHW insulation
						Pull rope	Soft-Fiber Polyester
						UP210-1A-8	2 + 1 gnd #12,#12, 600 V, RHH/RHW insulation
3601	E-284, E-274	53	RGS-PVC coated conduit	483.34	879.42	UP210-1A-7C	2 + 1 gnd #8,#10, 600 V, RHH/RHW insulation
						UP210-1A-7A	2 + 1 gnd #8,#10, 600 V, RHH/RHW insulation
						UP210-1A-8	2 + 1 gnd #12,#12, 600 V, RHH/RHW insulation
						Pull rope	Soft-Fiber Polyester

CONDUIT DATA

Conduit No	Reference	Size	Type	Total Fill (mm²)	Allowable Fill (mm²)	Included Cable No.	Conductor Type
3602	E-284, E-274	78	RGS-PVC coated conduit	436.32	1935.24	UP210-1A-8	2 + 1 gnd #12,#12, 600 V, RHH/RHW insulation
						UP210-1A-7B	2 + 1 gnd #8,#10, 600 V, RHH/RHW insulation
						UP210-1A-7C	2 + 1 gnd #8,#10, 600 V, RHH/RHW insulation
						Pull rope	Soft-Fiber Polyester
3603	E-284	53	RGS-PVC coated conduit	725.01	879.42	UP210-1A-10	2 + 1 gnd #12,#12, 600 V, RHH/RHW insulation
						UP210-1A-9C	2 + 1 gnd #8,#10, 600 V, RHH/RHW insulation
						Pull rope	Soft-Fiber Polyester
						UP210-1A-9	2 + 1 gnd #8,#10, 600 V, RHH/RHW insulation
3604	E-284, E-285	78	RGS-PVC coated conduit	436.32	1935.24	Pull rope	Soft-Fiber Polyester
						UP210-1A-9C	2 + 1 gnd #8,#10, 600 V, RHH/RHW insulation
						UP210-1A-9A	2 + 1 gnd #8,#10, 600 V, RHH/RHW insulation
						UP210-1A-10	2 + 1 gnd #12,#12, 600 V, RHH/RHW insulation
3605	E-284, E-274	53	RGS-PVC coated conduit	337.90	879.42	UP210-1A-10	2 + 1 gnd #12,#12, 600 V, RHH/RHW insulation
						UP210-1A-9B	2 + 1 gnd #8,#10, 600 V, RHH/RHW insulation
						UP210-1A-9C	2 + 1 gnd #8,#10, 600 V, RHH/RHW insulation
						Pull rope	Soft-Fiber Polyester
3606	E-284, E-274	53	RGS-PVC coated conduit	241.67	879.42	UP210-1A-12	2 + 1 gnd #12,#12, 600 V, RHH/RHW insulation
						UP210-1A-11	2 + 1 gnd #8,#10, 600 V, RHH/RHW insulation
						UP210-1A-11C	2 + 1 gnd #8,#10, 600 V, RHH/RHW insulation
3607	E-284, E-274	53	RGS-PVC coated conduit	241.67	879.42	UP210-1A-11A	2 + 1 gnd #8,#10, 600 V, RHH/RHW insulation
						UP210-1A-11C	2 + 1 gnd #8,#10, 600 V, RHH/RHW insulation
						UP210-1A-12	2 + 1 gnd #12,#12, 600 V, RHH/RHW insulation
3608	E-284, E-274	53	RGS-PVC coated conduit	241.67	879.42	UP210-1A-12	2 + 1 gnd #12,#12, 600 V, RHH/RHW insulation
						UP210-1A-11B	2 + 1 gnd #8,#10, 600 V, RHH/RHW insulation
						UP210-1A-11C	2 + 1 gnd #8,#10, 600 V, RHH/RHW insulation
3700	E-284, E-275	53	RGS-PVC coated conduit	387.11	879.42	UP210-1B-1	2 + 1 gnd #8,#10, 600 V, RHH/RHW insulation
						UP210-1B-2	2 + 1 gnd #12,#12, 600 V, RHH/RHW insulation
						Pull rope	Soft-Fiber Polyester
3701	E-284	53	RGS-PVC coated conduit	483.34	879.42	UP210-1B-1A	2 + 1 gnd #8,#10, 600 V, RHH/RHW insulation
						UP210-1B-2	2 + 1 gnd #12,#12, 600 V, RHH/RHW insulation
						Pull rope	Soft-Fiber Polyester

For continuation, see next sheet.

CONDUIT AND TRAY SCHEDULE

E-430

REVISED BY	DATE REVISED
PBP	8/02

CALCULATED/DESIGNED BY	CHECKED BY
AB	

DESIGN OVERSIGHT
BEHZAD GOLEMOHAMMADI

STATE OF CALIFORNIA - DEPARTMENT OF TRANSPORTATION
Caltrans

LAST REVISION 00-00-00
DATE PLOTTED => 4/4/2008
TIME PLOTTED => 5:11:10 PM

DIST	COUNTY	ROUTE	KILOMETER POST TOTAL PROJECT	SHEET No	TOTAL SHEETS
04	SF	80	13.2/13.9	390R1	1204

REGISTERED ELECTRICAL ENGINEER 12/19/02 DATE

12-6-04
PLANS APPROVAL DATE

REGISTERED PROFESSIONAL ENGINEER JENS ERLINGSSON No. 8249 Exp. 9/30/06 ELECTRICAL STATE OF CALIFORNIA

PB POWER, Inc.
A Parsons Brinckerhoff Company
303 Second St., Suite 700N
San Francisco, CA 94107-1317

The State of California or its officers or agents shall not be responsible for the accuracy or completeness of electronic copies of this plan sheet.

Caltrans now has a web site! To get to the web site, go to http://www.dot.ca.gov

REQUEST FOR INFORMATION NOT ADDRESSED IN THIS CCO REMAIN IN FORCE

MARK	DATE	DESCRIPTIONS	BY	CH'D	CCO#
1	02/19/08	ELECTRICAL MODIFICATIONS	MP EL	RR	42

REVISIONS

CONTRACT CHANGE ORDER NO._____
SHEET _____ OF _____

REGISTERED PROFESSIONAL ENGINEER MAXWELL FUMIO TAKATA No. E 8651 Exp. 9/30/2008 ELECTRICAL STATE OF CALIFORNIA

FOR REVISION ONLY

Caltrans Metric

CONDUIT DATA

Conduit No	Reference	Size	Type	Total Fill (mm²)	Allowable Fill (mm²)	Included Cable No.	Conductor Type
4311	E-96	41	RGS conduit	126.88	534.55	UP104-3	1-2/c + gnd #10,600 V, EPR insulation
						Pull rope	Soft-Fiber Polyester
4312	E-96	41	RGS conduit	0.00	534.55	Pull rope	Soft-Fiber Polyester
4313	E-96	78	RGS conduit	1020.16	1935.24	Pull rope	Soft-Fiber Polyester
						S-1031-1	1-3/c + gnd #2,600 V, EPR insulation
						UP104-3	1-2/c + gnd #10,600 V, EPR insulation
						A-1035-3	1-3/c + gnd #6,600 V, EPR insulation
4314	E-96	53	RGS conduit	648.58	879.42	S-1031-3	1-3/c + gnd #6,600 V, EPR insulation
						A-1035-3	1-3/c + gnd #6,600 V, EPR insulation
						Pull rope	Soft-Fiber Polyester
4315	E-96	41	RGS conduit	0.00	534.55	Pull rope	Soft-Fiber Polyester
4316	E-96	41	RGS conduit	0.00	534.55	Pull rope	Soft-Fiber Polyester
4317	E-96	53	RGS conduit	851.47	879.42	A-1011-1	1-3/c + gnd #2,600 V, EPR insulation
						Pull rope	Soft-Fiber Polyester
						A-1011-2	1-3/c + gnd #6,600 V, EPR insulation
4320	E-96	53	RGS conduit	0.00	879.42	Pull rope	Soft-Fiber Polyester
4321	E-96	41	RGS conduit	0.00	534.55	Pull rope	Soft-Fiber Polyester
4322	E-96	41	RGS conduit	0.00	534.55	Pull rope	Soft-Fiber Polyester
4323	E-96	53	RGS conduit	0.00	879.42	Pull rope	Soft-Fiber Polyester
4324	E-96	53	RGS conduit	0.00	879.42	Pull rope	Soft-Fiber Polyester
4325	E-96	41	RGS conduit	0.00	534.55	Pull rope	Soft-Fiber Polyester
4326	E-96	41	RGS conduit	0.00	534.55	Pull rope	Soft-Fiber Polyester
4327	E-96	41	RGS conduit	0.00	534.55	Pull rope	Soft-Fiber Polyester
4328	E-96	41	RGS conduit	0.00	534.55	Pull rope	Soft-Fiber Polyester
4329	E-96	41	RGS conduit	0.00	534.55	Pull rope	Soft-Fiber Polyester
4330	E-96	41	RGS conduit	0.00	534.55	Pull rope	Soft-Fiber Polyester
4331	E-96	41	RGS conduit	0.00	534.55	Pull rope	Soft-Fiber Polyester
4332	E-96	41	RGS conduit	0.00	534.55	Pull rope	Soft-Fiber Polyester
4333	E-97	41	RGS conduit	212.85	534.55	Pull rope	Soft-Fiber Polyester
						A-3002-2	3 + 1 gnd #6,#8, 600 V, RHH/RHW insulation
4334	E-97	41	RGS conduit	0.00	534.55	Pull rope	Soft-Fiber Polyester
4335	E-97	53	RGS conduit	366.10	879.42	Pull rope	Soft-Fiber Polyester
						A-3002-1	1-3/c + gnd #4,600 V, EPR insulation
4336	E-97	53	RGS conduit	0.00	879.42	Pull rope	Soft-Fiber Polyester
4337	E-97	41	RGS conduit	0.00	534.55	Pull rope	Soft-Fiber Polyester
4338	E-97	41	RGS conduit	0.00	534.55	Pull rope	Soft-Fiber Polyester
4339	E-97	41	RGS conduit	0.00	534.55	Pull rope	Soft-Fiber Polyester
4340	E-97	41	RGS conduit	0.00	534.55	Pull rope	Soft-Fiber Polyester
4341	E-97	53	RGS conduit	0.00	879.42	Pull rope	Soft-Fiber Polyester
4342	E-97	53	RGS conduit	0.00	879.42	Pull rope	Soft-Fiber Polyester
4343	E-97	41	RGS conduit	0.00	534.55	Pull rope	Soft-Fiber Polyester
4344	E-97	41	RGS conduit	0.00	534.55	Pull rope	Soft-Fiber Polyester

CONDUIT DATA

Conduit No	Reference	Size	Type	Total Fill (mm²)	Allowable Fill (mm²)	Included Cable No.	Conductor Type
4345	E-119	53	RGS conduit	0.00	879.42	Pull rope	Soft-Fiber Polyester
4351	E-97	41	RGS conduit	227.46	534.55	Pull rope	Soft-Fiber Polyester
						UP105-2	1-2/c + gnd #8,600 V, EPR insulation
4352	E-97	41	RGS conduit	0.00	534.55	Pull rope	Soft-Fiber Polyester
4353	E-97	53	RGS conduit	227.46	879.42	Pull rope	Soft-Fiber Polyester
						UP105-2	1-2/c + gnd #8,600 V, EPR insulation
4354	E-97	53	RGS conduit	0.00	879.42	Pull rope	Soft-Fiber Polyester
4355	E-97	41	RGS conduit	0.00	534.55	Pull rope	Soft-Fiber Polyester
4356	E-97	41	RGS conduit	0.00	534.55	Pull rope	Soft-Fiber Polyester
4357	E-97	41	RGS conduit	466.61	534.55	UP205-1	1-2/c + gnd #10,600 V, EPR insulation
						Pull rope	Soft-Fiber Polyester
						UP105-3	1-2/c + gnd #10,600 V, EPR insulation
						A-3009-2	3 + 1 gnd #6,#8, 600 V, RHH/RHW insulation
4358	E-97	41	RGS conduit	0.00	534.55	Pull rope	Soft-Fiber Polyester
4359	E-97	53	RGS conduit	451.17	879.42	A-3009-3	1-3/c + gnd #6,600 V, EPR insulation
						UP205-1	1-2/c + gnd #10,600 V, EPR insulation
						Pull rope	Soft-Fiber Polyester
4360	E-97	53	RGS conduit	527.18	879.42	Pull rope	Soft-Fiber Polyester
						A-3009-1	1-3/c + gnd #2,600 V, EPR insulation
4361	E-97	41	RGS conduit	98.10	534.55	Pull rope	Soft-Fiber Polyester
						1143	1 - 2 pair, shielded #18 with IS/OA, 300 V, PVC jacket
4362	E-97	41	RGS conduit	0.00	534.55	Pull rope	Soft-Fiber Polyester
4363	E-97	41	RGS conduit	324.29	534.55	A-3009-3	1-3/c + gnd #6,600 V, EPR insulation
						Pull rope	Soft-Fiber Polyester
4364	E-97	41	RGS conduit	212.85	534.55	A-3003-2	3 + 1 gnd #6,#8, 600 V, RHH/RHW insulation
						Pull rope	Soft-Fiber Polyester
4365	E-97	53	RGS conduit	324.29	879.42	A-3009-3	1-3/c + gnd #6,600 V, EPR insulation
						Pull rope	Soft-Fiber Polyester
4366	E-97	53	RGS conduit	366.10	879.42	A-3003-1	1-3/c + gnd #4,600 V, EPR insulation
						Pull rope	Soft-Fiber Polyester
4367	E-97	41	RGS conduit	98.10	534.55	Pull rope	Soft-Fiber Polyester
						1142	1 - 2 pair, shielded #18 with IS/OA, 300 V, PVC jacket
4368	E-97	41	RGS conduit	0.00	534.55	Pull rope	Soft-Fiber Polyester

For continuation, see next sheet.

CONDUIT AND TRAY SCHEDULE

E-435

REVISED BY	DATE REVISED

CALCULATED/ DESIGNED BY	CHECKED BY
PBP	AB

DATE 8/02 8/02

DESIGN OVERSIGHT
BEHZAD GOLEMOHAMMADI

STATE OF CALIFORNIA - DEPARTMENT OF TRANSPORTATION
Caltrans

LAST REVISION 00-00-00
DATE PLOTTED => 4/4/2008
TIME PLOTTED => 5:11:33 PM

DIST	COUNTY	ROUTE	KILOMETER POST TOTAL PROJECT	SHEET No	TOTAL SHEETS
04	SF	80	13.2/13.9	392R1	1204

REGISTERED ELECTRICAL ENGINEER 12/19/02 DATE

12-6-04
PLANS APPROVAL DATE

REGISTERED PROFESSIONAL ENGINEER JENS ERLINGSSON No. 8249 Exp. 9/30/06 ELECTRICAL STATE OF CALIFORNIA

PB POWER, Inc.
A Parsons Brinckerhoff Company
303 Second St., Suite 700N
San Francisco, CA 94107-1317

The State of California or its officers or agents shall not be responsible for the accuracy or completeness of electronic copies of this plan sheet.

Caltrans now has a web site! To get to the web site, go to http://www.dot.ca.gov

REQUEST FOR INFORMATION NOT ADDRESSED IN THIS CCO REMAIN IN FORCE

MARK	DATE	DESCRIPTIONS	BY	CH'D	CCO#
1	02/19/08	ELECTRICAL MODIFICATIONS	MP EL	RR	42

REVISIONS

CONTRACT CHANGE ORDER NO._____
SHEET _____ OF _____

REGISTERED PROFESSIONAL ENGINEER MAXWELL FUMIO TAKAKI No. E 8651 Exp. 9/30/2008 ELECTRICAL STATE OF CALIFORNIA

FOR REVISION ONLY

Caltrans Metric

CONDUIT DATA

Conduit No	Reference	Size	Type	Total Fill (mm²)	Allowable Fill (mm²)	Included Cable No.	Conductor Type
4433	E-98	41	RGS conduit	0.00	534.55	Pull rope	Soft-Fiber Polyester
4434	E-98	41	RGS conduit	0.00	534.55	Pull rope	Soft-Fiber Polyester
4435	E-119	53	RGS conduit	0.00	879.42	Pull rope	Soft-Fiber Polyester
4436	E-98	53	RGS conduit	324.29	879.42	Pull rope	Soft-Fiber Polyester
						A-1012-2	1-3/C + gnd #6, 600 V, EPR insulation
4441	E-99	41	RGS conduit	0.00	534.55	Pull rope	Soft-Fiber Polyester
4442	E-99	41	RGS conduit	0.00	534.55	Pull rope	Soft-Fiber Polyester
4443	E-99	53	RGS conduit	0.00	879.42	Pull rope	Soft-Fiber Polyester
4444	E-99	53	RGS conduit	0.00	879.42	Pull rope	Soft-Fiber Polyester
4445	E-99	41	RGS conduit	0.00	534.55	Pull rope	Soft-Fiber Polyester
4446	E-99	41	RGS conduit	0.00	534.55	Pull rope	Soft-Fiber Polyester
4447	E-99	41	RGS conduit	0.00	534.55	Pull rope	Soft-Fiber Polyester
4448	E-99	41	RGS conduit	0.00	534.55	Pull rope	Soft-Fiber Polyester
4449	E-98	53	RGS conduit	0.00	879.42	Pull rope	Soft-Fiber Polyester
4450	E-98	53	RGS conduit	0.00	879.42	Pull rope	Soft-Fiber Polyester
4451	E-99	41	RGS conduit	0.00	534.55	Pull rope	Soft-Fiber Polyester
4452	E-99	41	RGS conduit	0.00	534.55	Pull rope	Soft-Fiber Polyester
4453	E-99	41	RGS conduit	440.31	534.55	Pull rope	Soft-Fiber Polyester
						UP108-2A	1-2/C + gnd #8, 600 V, EPR insulation
						A-3006-2	3 + 1 gnd #6,#8, 600 V, RHH/RHW insulation
4454	E-99	41	RGS conduit	0.00	534.55	Pull rope	Soft-Fiber Polyester
4455	E-99	53	RGS conduit	593.56	879.42	UP108-2A	1-2/C + gnd #8, 600 V, EPR insulation
						A-3006-1	1-3/C + gnd #4, 600 V, EPR insulation
						Pull rope	Soft-Fiber Polyester
4456	E-99	53	RGS conduit	0.00	879.42	Pull rope	Soft-Fiber Polyester
4457	E-99	41	RGS conduit	98.10	534.55	Pull rope	Soft-Fiber Polyester
						1144	1 - 2 pair, shielded #18 with IS/OA , 300 V, PVC jacket
4458	E-99	41	RGS conduit	0.00	534.55	Pull rope	Soft-Fiber Polyester
4459	E-99	41	RGS conduit	227.46	534.55	Pull rope	Soft-Fiber Polyester
						UP108-4A	1-2/C + gnd #8, 600 V, EPR insulation
4460	E-99	41	RGS conduit	0.00	534.55	Pull rope	Soft-Fiber Polyester
4461	E-99	53	RGS conduit	227.46	879.42	Pull rope	Soft-Fiber Polyester
						UP108-4A	1-2/C + gnd #8, 600 V, EPR insulation
4462	E-99	53	RGS conduit	0.00	879.42	Pull rope	Soft-Fiber Polyester
4463	E-99	41	RGS conduit	98.10	534.55	1145	1 - 2 pair, shielded #18 with IS/OA , 300 V, PVC jacket
						Pull rope	Soft-Fiber Polyester
4464	E-99	41	RGS conduit	0.00	534.55	Pull rope	Soft-Fiber Polyester
4465	E-99	78	RGS conduit	648.58	1935.24	A-1013-2	1-3/C + gnd #6, 600 V, EPR insulation
						A-1013-2	1-3/C + gnd #6, 600 V, EPR insulation
						Pull rope	Soft-Fiber Polyester
4466	E-119	53	RGS conduit	0.00	879.42	Pull rope	Soft-Fiber Polyester
4471	E-99	41	RGS conduit	0.00	534.55	Pull rope	Soft-Fiber Polyester
4472	E-99	41	RGS conduit	0.00	534.55	Pull rope	Soft-Fiber Polyester
4473	E-99	53	RGS conduit	0.00	879.42	Pull rope	Soft-Fiber Polyester
4474	E-99	53	RGS conduit	0.00	879.42	Pull rope	Soft-Fiber Polyester

CONDUIT DATA

Conduit No	Reference	Size	Type	Total Fill (mm²)	Allowable Fill (mm²)	Included Cable No.	Conductor Type
4475	E-99	41	RGS conduit	0.00	534.55	Pull rope	Soft-Fiber Polyester
4476	E-99	41	RGS conduit	0.00	534.55	Pull rope	Soft-Fiber Polyester
4477	E-99	41	RGS conduit	227.46	534.55	UP107-3	1-2/C + gnd #8, 600 V, EPR insulation
						Pull rope	Soft-Fiber Polyester
4478	E-99	41	RGS conduit	126.88	534.55	Pull rope	Soft-Fiber Polyester
						UP207-1	1-2/C + gnd #10, 600 V, EPR insulation
4479	E-99	53	RGS conduit	0.00	879.42	Pull rope	Soft-Fiber Polyester
4480	E-99	53	RGS conduit	126.88	879.42	UP207-1	1-2/C + gnd #10, 600 V, EPR insulation
						Pull rope	Soft-Fiber Polyester
4481	E-99	41	RGS conduit	0.00	534.55	Pull rope	Soft-Fiber Polyester
4482	E-99	41	RGS conduit	0.00	534.55	Pull rope	Soft-Fiber Polyester
4483	E-99	41	RGS conduit	0.00	534.55	Pull rope	Soft-Fiber Polyester
4484	E-99	41	RGS conduit	0.00	534.55	Pull rope	Soft-Fiber Polyester
4485	E-99	53	RGS conduit	0.00	879.42	Pull rope	Soft-Fiber Polyester
4486	E-99	53	RGS conduit	0.00	879.42	Pull rope	Soft-Fiber Polyester
4487	E-99	41	RGS conduit	0.00	534.55	Pull rope	Soft-Fiber Polyester
4488	E-99	41	RGS conduit	0.00	534.55	Pull rope	Soft-Fiber Polyester
4489	E-99	41	RGS conduit	0.00 1	534.55	Pull rope	Soft-Fiber Polyester 1
4490	E-99	41	RGS conduit	0.00	534.55	Pull rope	Soft-Fiber Polyester
4491	E-99	53	RGS conduit	690.39	879.42	S-1031-3	1-3/C + gnd #4, 600 V, EPR insulation
						A-1035-3	1-3/C + gnd #6, 600 V, EPR insulation
						Pull rope	Soft-Fiber Polyester
4492	E-99	53	RGS conduit	481.21 1	879.42	Pull rope	Soft-Fiber Polyester
						A-1035-4	3 + 1 gnd #6, #8, 600 V, RHH/RHW insulation
						S-1031-4	3 + 1 gnd #4, #8, 600 V, RHH/RHW insulation 1
4493	E-99	41	RGS conduit	0.00	534.55	Pull rope	Soft-Fiber Polyester
4494	E-99	41	RGS conduit	0.00	534.55	Pull rope	Soft-Fiber Polyester
4501	E-101	53	RGS conduit	0.00	879.42	Pull rope	Soft-Fiber Polyester
4502	E-101	53	RGS conduit	0.00	879.42	Pull rope	Soft-Fiber Polyester
4503	E-101	53	RGS conduit	0.00	879.42	Pull rope	Soft-Fiber Polyester
4504	E-101	53	RGS conduit	0.00	879.42	Pull rope	Soft-Fiber Polyester

For continuation, see next sheet.

CONDUIT AND TRAY SCHEDULE

E-437

REVISED BY	DATE REVISED

CALCULATED/DESIGNED BY	CHECKED BY
PBP	AB
DATE 8/02	8/02

DESIGN OVERSIGHT
BEHZAD GOLEMOHAMMADI

STATE OF CALIFORNIA - DEPARTMENT OF TRANSPORTATION
Caltrans

LAST REVISION 00-00-00
DATE PLOTTED => 4/4/2008
TIME PLOTTED => 5:11:58 PM

FOR REDUCED PLANS ORIGINAL SCALE IS IN MILLIMETERS 0 20 40 60 80

DGN FILE =>T:\13103\MS\pse\SAS Struc\CCO\SAS CCO42\04-0120f1_0392R01.dgn
USERNAME =>llorico

CU 04251 EA 0120F1

DIST	COUNTY	ROUTE	KILOMETER POST TOTAL PROJECT	SHEET No	TOTAL SHEETS
04	SF	80	13.2/13.9	393R1	1204

REQUEST FOR INFORMATION NOT ADDRESSED IN THIS CCO REMAIN IN FORCE

MARK	DATE	DESCRIPTIONS	BY	CH'D	CCO#
1	02/19/08	ELECTRICAL MODIFICATIONS	MP EL	RR	42

REVISIONS

CONTRACT CHANGE ORDER NO._____
SHEET _____ OF _____

REGISTERED PROFESSIONAL ENGINEER MARNELL FUMIO TAKAKI No. E 8651 Exp. 9/30/2008 ELECTRICAL STATE OF CALIFORNIA

FOR REVISION ONLY

Caltrans Metric

12/19/02
REGISTERED ELECTRICAL ENGINEER DATE

12-6-04
PLANS APPROVAL DATE

REGISTERED PROFESSIONAL ENGINEER JENS ERLINGSSON No. 8249 Exp. 9/30/06 ELECTRICAL STATE OF CALIFORNIA

PB POWER, Inc.
A Parsons Brinckerhoff Company
303 Second St., Suite 700N
San Francisco, CA 94107-1317

The State of California or its officers or agents shall not be responsible for the accuracy or completeness of electronic copies of this plan sheet.

Caltrans now has a web site! To get to the web site, go to http://www.dot.ca.gov

CONDUIT DATA

Conduit No	Reference	Size	Type	Total Fill (mm²)	Allowable Fill (mm²)	Included Cable No.	Conductor Type
4505	E-100	41	RGS conduit	0.00	534.55	Pull rope	Soft-Fiber Polyester
4506	E-100	41	RGS conduit	0.00	534.55	Pull rope	Soft-Fiber Polyester
4507	E-101	41	RGS conduit	0.00	534.55	Pull rope	Soft-Fiber Polyester
4508	E-99	41	RGS conduit	0.00	534.55	Pull rope	Soft-Fiber Polyester
4509	E-99	53	RGS conduit	0.00	879.42	Pull rope	Soft-Fiber Polyester
4510	E-99	53	RGS conduit	0.00	879.42	Pull rope	Soft-Fiber Polyester
4511	E-100	41	RGS conduit	0.00	534.55	Pull rope	Soft-Fiber Polyester
4512	E-100	41	RGS conduit	0.00	534.55	Pull rope	Soft-Fiber Polyester
4513	E-100	41	RGS conduit	0.00	534.55	Pull rope	Soft-Fiber Polyester
4514	E-100	41	RGS conduit	0.00	534.55	Pull rope	Soft-Fiber Polyester
4515	E-100	53	RGS conduit	0.00	879.42	Pull rope	Soft-Fiber Polyester
4516	E-100	53	RGS conduit	0.00	879.42	Pull rope	Soft-Fiber Polyester
4517	E-100	41	RGS conduit	0.00	534.55	Pull rope	Soft-Fiber Polyester
4518	E-100	41	RGS conduit	0.00	534.55	Pull rope	Soft-Fiber Polyester
4519	E-100	41	RGS conduit	0.00	534.55	Pull rope	Soft-Fiber Polyester
4520	E-100	41	RGS conduit	0.00	534.55	Pull rope	Soft-Fiber Polyester
4521	E-100	53	RGS conduit	481.21	879.42	Pull rope	Soft-Fiber Polyester
						S-1031-4	3 + 1 gnd #4, #8, 600 V, RHH/RHW insulation
						A-1035-4	3 + 1 gnd #6, #8, 600 V, RHH/RHW insulation
4522	E-100	53	RGS conduit	176.28	879.42	Pull rope	Soft-Fiber Polyester
						A-1035-4	3 + 1 gnd #6, #8, 600 V, RHH/RHW insulation
4523	E-100	41	RGS conduit	0.00	534.55	Pull rope	Soft-Fiber Polyester
4524	E-100	41	RGS conduit	0.00	534.55	Pull rope	Soft-Fiber Polyester
4525	E-100	53	RGS conduit	324.29	879.42	A-1013-2	1-3/C + gnd #6, 600 V, EPR insulation
						Pull rope	Soft-Fiber Polyester
4526	E-100	53	RGS conduit	648.58	879.42	A-1014-2	1-3/C + gnd #6, 600 V, EPR insulation
						Pull rope	Soft-Fiber Polyester
						A-1014-2	1-3/C + gnd #6, 600 V, EPR insulation
4527	E-100	41	RGS conduit	0.00	534.55	Pull rope	Soft-Fiber Polyester
4528	E-100	41	RGS conduit	0.00	534.55	Pull rope	Soft-Fiber Polyester
4530	E-100	53	RGS conduit	0.00	879.42	Pull rope	Soft-Fiber Polyester
4531	E-100	41	RGS conduit	0.00	534.55	Pull rope	Soft-Fiber Polyester
4532	E-100	41	RGS conduit	0.00	534.55	Pull rope	Soft-Fiber Polyester
4533	E-100	53	RGS conduit	0.00	879.42	Pull rope	Soft-Fiber Polyester
4534	E-100	53	RGS conduit	0.00	879.42	Pull rope	Soft-Fiber Polyester
4535	E-100	41	RGS conduit	0.00	534.55	Pull rope	Soft-Fiber Polyester
4536	E-100	41	RGS conduit	0.00	534.55	Pull rope	Soft-Fiber Polyester
4537	E-100	41	RGS conduit	0.00	534.55	Pull rope	Soft-Fiber Polyester
4538	E-100	41	RGS conduit	0.00	534.55	Pull rope	Soft-Fiber Polyester
4539	E-100	53	RGS conduit	0.00	879.42	Pull rope	Soft-Fiber Polyester
4540	E-100	53	RGS conduit	0.00	879.42	Pull rope	Soft-Fiber Polyester
4541	E-100	41	RGS conduit	0.00	534.55	Pull rope	Soft-Fiber Polyester
4542	E-100	41	RGS conduit	0.00	534.55	Pull rope	Soft-Fiber Polyester

CONDUIT DATA

Conduit No	Reference	Size	Type	Total Fill (mm²)	Allowable Fill (mm²)	Included Cable No.	Conductor Type
4543	E-100	41	RGS conduit	227.46	534.55	Pull rope	Soft-Fiber Polyester
						UP108-2	1-2/C + gnd #8, 600 V, EPR insulation
4544	E-100	41	RGS conduit	0.00	534.55	Pull rope	Soft-Fiber Polyester
4545	E-100	53	RGS conduit	454.92	879.42	Pull rope	Soft-Fiber Polyester
						UP108-2A	1-2/C + gnd #8, 600 V, EPR insulation
						UP108-2	1-2/C + gnd #8, 600 V, EPR insulation
4546	E-100	53	RGS conduit	0.00	879.42	Pull rope	Soft-Fiber Polyester
4547	E-100	41	RGS conduit	196.20	534.55	1144	1 - 2 pair, shielded #18 with IS/OA, 300 V, PVC jacket
						Pull rope	Soft-Fiber Polyester
						1146	1 - 2 pair, shielded #18 with IS/OA, 300 V, PVC jacket
4548	E-100	41	RGS conduit	0.00	534.55	Pull rope	Soft-Fiber Polyester
4549	E-100	41	RGS conduit	324.29	534.55	Pull rope	Soft-Fiber Polyester
						1106	1-3/C + gnd #6, 600 V, EPR insulation
						S-1032-2	3 + 1 gnd #6, #8, 600 V, RHH/RHW insulation
4550	E-100	41	RGS conduit	454.92	534.55	UP108-3	1-2/C + gnd #8, 600 V, EPR insulation
						Pull rope	Soft-Fiber Polyester
						UP108-4	1-2/C + gnd #8, 600 V, EPR insulation
4551	E-100	53	RGS conduit	690.39	879.42	S-1032-1	1-3/C + gnd #4, 600 V, EPR insulation
						1106	1-3/C + gnd #6, 600 V, EPR insulation
						Pull rope	Soft-Fiber Polyester
4552	E-100	53	RGS conduit	682.38	879.42	UP108-3	1-2/C + gnd #8, 600 V, EPR insulation
						Pull rope	Soft-Fiber Polyester
						UP108-4	1-2/C + gnd #8, 600 V, EPR insulation
						UP108-4A	1-2/C + gnd #8, 600 V, EPR insulation
4553	E-100	41	RGS conduit	196.20	534.55	1145	1 - 2 pair, shielded #18 with IS/OA, 300 V, PVC jacket
						Pull rope	Soft-Fiber Polyester
						1147	1 - 2 pair, shielded #18 with IS/OA, 300 V, PVC jacket
4554	E-100	41	RGS conduit	0.00	534.55	Pull rope	Soft-Fiber Polyester
4555	E-100	53	RGS conduit	648.58	879.42	Pull rope	Soft-Fiber Polyester
						A-1014-2	1-3/C + gnd #6, 600 V, EPR insulation
						A-1014-2	1-3/C + gnd #6, 600 V, EPR insulation
4556	E-100	103	RGS conduit	0.00	2576.49	Pull rope	Soft-Fiber Polyester
4557	E-101	53	RGS conduit	0.00	879.42	Pull rope	Soft-Fiber Polyester
4558	E-101	53	RGS conduit	0.00	879.42	Pull rope	Soft-Fiber Polyester
4749	E-99	53	RGS conduit	227.46	879.42	Pull rope	Soft-Fiber Polyester
						UP107-3	1-2/C + gnd #8, 600 V, EPR insulation
5001	E-71	78	RGS-PVC coated conduit	98.42	1935.24	UP205-5	2 + 1 gnd #12,#12, 600 V, RHH/RHW insulation
						UP204-5	2 + 1 gnd #12,#12, 600 V, RHH/RHW insulation
						Pull rope	Soft-Fiber Polyester

For continuation, see next sheet.

CONDUIT AND TRAY SCHEDULE

E-438

DATE	REVISED BY	DATE	REVISED
PBP		8/02	AB

CALCULATED/DESIGNED BY — CHECKED BY

DESIGN OVERSIGHT — BEHZAD GOLEMOHAMMADI

STATE OF CALIFORNIA - DEPARTMENT OF TRANSPORTATION

Caltrans

LAST REVISION 00-00-00 — DATE PLOTTED => 4/4/2008 TIME PLOTTED => 5:12:19 PM

FOR REDUCED PLANS ORIGINAL SCALE IS IN MILLIMETERS 0 20 40 60 80

DGN FILE =>T:\13103\MS\pse\SAS Struc\CCO\SAS CCO42\04-0120f1_0393R01.dgn
USERNAME =>llorico

CU 04251 — EA 0120F1

DIST	COUNTY	ROUTE	KILOMETER POST TOTAL PROJECT	SHEET No	TOTAL SHEETS
04	SF	80	13.2/13.9	396R1	1204

REGISTERED ELECTRICAL ENGINEER 12/19/02 DATE

12-6-04
PLANS APPROVAL DATE

REGISTERED PROFESSIONAL ENGINEER JENS ERLINGSSON No. 8249 Exp. 9/30/06 ELECTRICAL STATE OF CALIFORNIA

PB POWER, Inc.
A Parsons Brinckerhoff Company
303 Second St., Suite 700N
San Francisco, CA 94107-1317

The State of California or its officers or agents shall not be responsible for the accuracy or completeness of electronic copies of this plan sheet.

Caltrans now has a web site! To get to the web site, go to http://www.dot.ca.gov

Caltrans Metric

REQUEST FOR INFORMATION NOT ADDRESSED IN THIS CCO REMAIN IN FORCE

MARK	DATE	DESCRIPTIONS	BY	CH'D	CCO#
1	02/19/08	ELECTRICAL MODIFICATIONS	MP EL	RR	42

REVISIONS

CONTRACT CHANGE ORDER NO. _____
SHEET _____ OF _____

REGISTERED PROFESSIONAL ENGINEER MAXWELL FUMIO TAKATA No. E 8651 Exp. 9/30/2008 ELECTRICAL STATE OF CALIFORNIA

FOR REVISION ONLY

CONDUIT DATA

Conduit No	Reference	Size	Type	Total Fill (mm²)	Allowable Fill (mm²)	Included Cable No.	Conductor Type
5251	E-116	78	RGS-PVC coated conduit	0.00	1935.24	Pull rope	Soft-Fiber Polyester
5261	E-117	78	RGS conduit	648.58	1935.24	LP222-2,4	1-3/C + gnd #6, 600 V, EPR insulation
						Pull rope	Soft-Fiber Polyester
						LP222-6,8	1-3/C + gnd #6, 600 V, EPR insulation
5262	E-117	78	RGS conduit	0.00	1935.24	Pull rope	Soft-Fiber Polyester
5263	E-117	78	RGS conduit	1108.98	1935.24	UP207-7	1-2/C + gnd #8, 600 V, EPR insulation
						2098	1-3/C + gnd #2, 600 V, EPR insulation
						UP207-1	1-2/C + gnd #10, 600 V, EPR insulation
						Pull rope	Soft-Fiber Polyester
						UP207-8	1-2/C + gnd #8, 600 V, EPR insulation
5264	E-117	78	RGS conduit	0.00	1935.24	Pull rope	Soft-Fiber Polyester
5265	E-117	78	RGS conduit	527.18	1935.24	Pull rope	Soft-Fiber Polyester
						2106	1-3/C + gnd #2, 600 V, EPR insulation
5266	E-117	78	RGS conduit	0.00	1935.24	Pull rope	Soft-Fiber Polyester
5267	E-117	78	RGS conduit	1201.71	1935.24	Pull rope	Soft-Fiber Polyester
						1474-8	50 pair #18, shielded pairs, IS/OS shield 600 V, XLPE insul., PVC jacket
5269	E-117	78	RGS-PVC coated conduit	30.19	1935.24	2475-3C	12 Fiber, single mode fiberoptic cable
						Pull rope	Soft-Fiber Polyester
5270	E-117	78	RGS-PVC coated conduit	1201.71	1935.24	Pull rope	Soft-Fiber Polyester
						1473-7	50 pair #18, shielded pairs, IS/OS shield 600 V, XLPE insul., PVC jacket
5271	E-117	78	RGS-PVC coated conduit	1201.71	1935.24	Pull rope	Soft-Fiber Polyester
						1474-7	50 pair #18, shielded pairs, IS/OS shield 600 V, XLPE insul., PVC jacket
5272	E-117	78	RGS-PVC coated conduit	1201.71	1935.24	1473-8	50 pair #18, shielded pairs, IS/OS shield 600 V, XLPE insul., PVC jacket
						Pull rope	Soft-Fiber Polyester
5273	E-117	78	RGS-PVC coated conduit	0.00	1935.24	Pull rope	Soft-Fiber Polyester
5274	E-117	78	RGS-PVC coated conduit	150.44	1935.24	MVDSE03A	MVDS DLC
						Pull rope	Soft-Fiber Polyester
5275	E-118	78	RGS-PVC coated conduit	1201.71	1935.24	2474-10	50 pair #18, shielded pairs, IS/OS shield 600 V, XLPE insul., PVC jacket
						Pull rope	Soft-Fiber Polyester
5276	E-118	78	RGS-PVC coated conduit	0.00	1935.24	Pull rope	Soft-Fiber Polyester
5277	E-118	78	RGS-PVC coated conduit	1201.71	1935.24	1473-8	50 pair #18, shielded pairs, IS/OS shield 600 V, XLPE insul., PVC jacket
5281	E-118	78	RGS conduit	307.37	1935.24	2210-5	1-3/C #14, 600 V, EPR insulation
						Pull rope	Soft-Fiber Polyester
						2201-3	1-3/C #14, 600 V, EPR insulation
						2201-4	1-9/C #16, 600 V, EPR insulation
5282	E-118	78	RGS conduit	98.10	1935.24	S-3056-9	1-4/C #14, 600 V, EPR insulation
						Pull rope	Soft-Fiber Polyester
5283	E-118	78	RGS conduit	1630.68	1935.24	UP208-8	1-2/C + gnd #8, 600 V, EPR insulation
						Pull rope	Soft-Fiber Polyester
						LP223-2,4	1-3/C + gnd #6, 600 V, EPR insulation
						LP223-6,8	1-3/C + gnd #6, 600 V, EPR insulation
						UP208-7	1-2/C + gnd #8, 600 V, EPR insulation
						2099	1-3/C + gnd #2, 600 V, EPR insulation
5284	E-118	78	RGS conduit	682.38	1935.24	UP208-2	1-2/C + gnd #8, 600 V, EPR insulation
						Pull rope	Soft-Fiber Polyester
						UP208-4	1-2/C + gnd #8, 600 V, EPR insulation
						UP208-6	1-2/C + gnd #8, 600 V, EPR insulation
5285	E-118	78	RGS conduit	527.18	1935.24	2107	1-3/C + gnd #2, 600 V, EPR insulation
						Pull rope	Soft-Fiber Polyester

CONDUIT DATA

Conduit No	Reference	Size	Type	Total Fill (mm²)	Allowable Fill (mm²)	Included Cable No.	Conductor Type
5286	E-118	78	RGS conduit	1496.01	1935.24	2154	1 - 2 pair, shielded #18 with IS/OA, 300 V, PVC jacket
						2152	1 - 2 pair, shielded #18 with IS/OA, 300 V, PVC jacket
						2153	1 - 2 pair, shielded #18 with IS/OA, 300 V, PVC jacket
						1474-10	50 pair #18, shielded pairs, IS/OS shield 600 V, XLPE insul., PVC jacket
						Pull rope	Soft-Fiber Polyester
5287	E-118	78	RGS conduit	0.00	1935.24	Pull rope	Soft-Fiber Polyester
5289	E-118	78	RGS-PVC coated conduit	1201.71	1935.24	Pull rope	Soft-Fiber Polyester
						1473-10	50 pair #18, shielded pairs, IS/OS shield 600 V, XLPE insul., PVC jacket
5290	E-118	78	RGS-PVC coated conduit	1519.51	1935.24	1474-8A	1 - 6 pair, shielded #18 with overall shield, 300 V, PVC jacket
						1474-8B	1 - 6 pair, shielded #18 with overall shield, 300 V, PVC jacket
						1474-8	50 pair #18, shielded pairs, IS/OS shield 600 V, XLPE insul., PVC jacket
						Pull rope	Soft-Fiber Polyester
5299	E-182	41	RGS conduit	425.70	534.55	A-3032-2	3 + 1 gnd #6,#8, 600 V, RHH/RHW insulation
						A-3033-2	3 + 1 gnd #6,#8, 600 V, RHH/RHW insulation
5301	E-181	41	RGS conduit	0.00	534.55	Pull rope	Soft-Fiber Polyester
5302	E-181	41	RGS conduit	0.00	534.55	Pull rope	Soft-Fiber Polyester
5303	E-181	53	RGS conduit	648.58	879.42	A-3040-3	1-3/C + gnd #6, 600 V, EPR insulation
						Pull rope	Soft-Fiber Polyester
						A-3039-3	1-3/C + gnd #6, 600 V, EPR insulation
5304	E-181	53	RGS conduit	0.00	879.42	Pull rope	Soft-Fiber Polyester
5305	E-181	41	RGS conduit	212.85	534.55	Pull rope	Soft-Fiber Polyester
						LP219-2,4A	3 + 1 gnd #6,#8, 600 V, RHH/RHW insulation
5306	E-181	41	RGS conduit	440.31	534.55	UP205-6	1-2/C + gnd #8, 600 V, EPR insulation
						Pull rope	Soft-Fiber Polyester
						LP219-6,8A	3 + 1 gnd #6,#8, 600 V, RHH/RHW insulation
5307	E-181	53	RGS conduit	324.29	879.42	LP219-2,4	1-3/C + gnd #6, 600 V, EPR insulation
						Pull rope	Soft-Fiber Polyester
5308	E-181	53	RGS conduit	551.75	879.42	UP205-6	1-2/C + gnd #8, 600 V, EPR insulation
						Pull rope	Soft-Fiber Polyester
						LP219-6,8	1-3/C + gnd #6, 600 V, EPR insulation
5309	E-181	53	RGS conduit	98.10	879.42	Pull rope	Soft-Fiber Polyester
						2155	1 - 2 pair, shielded #18 with IS/OA, 300 V, PVC jacket
5310	E-181	53	RGS conduit	0.00	879.42	Pull rope	Soft-Fiber Polyester
5311	E-181	41	RGS conduit	126.88 1	534.55	S-2031-2	3 + 1 gnd #6,#8, 600 V, RHH/RHW insulation
						Pull rope	Soft-Fiber Polyester
						UP204-1	1-2/C + gnd #10, 600 V, EPR insulation

For continuation, see next sheet.

CONDUIT AND TRAY SCHEDULE

E-441

DESIGN OVERSIGHT
BEHZAD GOLEMOHAMMADI

STATE OF CALIFORNIA - DEPARTMENT OF TRANSPORTATION
Caltrans

DATE REVISED	REVISED BY
8/02	AB

CALCULATED/DESIGNED BY PBP
CHECKED BY

LAST REVISION 00-00-00
DATE PLOTTED => 4/4/2008
TIME PLOTTED => 5:12:41 PM

FOR REDUCED PLANS ORIGINAL SCALE IS IN MILLIMETERS 0 20 40 60 80

DGN FILE =>T:\13103\MS\pse\SAS Struc\CCO\SAS CCO42\04-0120f1_0396R01.dgn
USERNAME =>llorico

CU 04251

EA 0120F1

DIST	COUNTY	ROUTE	KILOMETER POST TOTAL PROJECT	SHEET No	TOTAL SHEETS
04	SF	80	13.2/13.9	397R1	1204

REGISTERED ELECTRICAL ENGINEER 12/19/02 DATE

12-6-04
PLANS APPROVAL DATE

REGISTERED PROFESSIONAL ENGINEER JENS ERLINGSSON No. 8249 Exp. 9/30/06 ELECTRICAL STATE OF CALIFORNIA

PB POWER, Inc.
A Parsons Brinckerhoff Company
303 Second St., Suite 700N
San Francisco, CA 94107-1317

The State of California or its officers or agents shall not be responsible for the accuracy or completeness of electronic copies of this plan sheet.

Caltrans now has a web site! To get to the web site, go to http://www.dot.ca.gov

REQUEST FOR INFORMATION NOT ADDRESSED IN THIS CCO REMAIN IN FORCE

MARK	DATE	DESCRIPTIONS	BY	CH'D	CCO#
1	02/19/08	ELECTRICAL MODIFICATIONS	MP EL	RR	42

REVISIONS

CONTRACT CHANGE ORDER NO. _____
SHEET _____ OF _____

REGISTERED PROFESSIONAL ENGINEER MARCELL FUMIO TAKAKI No. E 8651 Exp. 9/30/2008 ELECTRICAL STATE OF CALIFORNIA

FOR REVISION ONLY

Caltrans Metric

CONDUIT DATA

Conduit No	Reference	Size	Type	Total Fill (mm²)	Allowable Fill (mm²)	Included Cable No.	Conductor Type
5312	E-181	41	RGS conduit	0.00 (1)	534.55	Pull rope	Soft-Fiber Polyester
5313	E-181	78	RGS conduit	654.06	1935.24	UP204-1	1-2/C + gnd #10, 600 V, EPR insulation
						S-2031-1	1-3/C + gnd #2, 600 V, EPR insulation
						Pull rope	Soft-Fiber Polyester
5314	E-181	53	RGS conduit	648.58	879.42	A-2035-1	1-3/C + gnd #6, 600 V, EPR insulation
						Pull rope	Soft-Fiber Polyester
5315	E-181	53	RGS conduit	0.00	879.42	Pull rope	Soft-Fiber Polyester
5316	E-181	53	RGS conduit	0.00	879.42	Pull rope	Soft-Fiber Polyester
5317	E-181	78	RGS conduit	527.18	1935.24	A-2011-1	1-3/C + gnd #2, 600 V, EPR insulation
						Pull rope	Soft-Fiber Polyester
5320	E-185	78	RGS conduit	0.00	1935.24	Pull rope	Soft-Fiber Polyester
5321	E-181	41	RGS conduit	0.00	534.55	Pull rope	Soft-Fiber Polyester
5322	E-181	41	RGS conduit	0.00	534.55	Pull rope	Soft-Fiber Polyester
5323	E-181	53	RGS conduit	0.00	879.42	Pull rope	Soft-Fiber Polyester
5324	E-181	53	RGS conduit	0.00	879.42	Pull rope	Soft-Fiber Polyester
5325	E-181	53	RGS conduit	0.00	879.42	Pull rope	Soft-Fiber Polyester
5326	E-181	53	RGS conduit	0.00	879.42	Pull rope	Soft-Fiber Polyester
5333	E-182	41	RGS conduit	212.85	534.55	Pull rope	Soft-Fiber Polyester
						LP220-2,4A	3 + 1 gnd #6,#8, 600 V, RHH/RHW insulation
5334	E-182	41	RGS conduit	0.00	534.55	Pull rope	Soft-Fiber Polyester
5335	E-182	53	RGS conduit	324.29	879.42	Pull rope	Soft-Fiber Polyester
						LP220-2,4	1-3/C + gnd #6, 600 V, EPR insulation
5336	E-182	53	RGS conduit	0.00	879.42	Pull rope	Soft-Fiber Polyester
5337	E-182	53	RGS conduit	0.00	879.42	Pull rope	Soft-Fiber Polyester
5338	E-182	53	RGS conduit	0.00	879.42	Pull rope	Soft-Fiber Polyester
5346	E-185	53	RGS conduit	366.10	879.42	Pull rope	Soft-Fiber Polyester
						A-3031-1	1-3/C + gnd #4, 600 V, EPR insulation
5347	E-185	53	RGS conduit	0.00	879.42	Pull rope	Soft-Fiber Polyester
5348	E-181	41	RGS conduit	212.85	534.55	Pull rope	Soft-Fiber Polyester
						A-3031-2	3 + 1 gnd #6,#8, 600 V, RHH/RHW insulation
5349	E-181	41	RGS conduit	212.85	534.55	Pull rope	Soft-Fiber Polyester
						A-2011-2	3 + 1 gnd #6,#8, 600 V, RHH/RHW insulation
5350	E-185	53	RGS conduit	0.00	879.42	Pull rope	Soft-Fiber Polyester
5351	E-182	41	RGS conduit	0.00	534.55	Pull rope	Soft-Fiber Polyester
5352	E-182	41	RGS conduit	212.85	534.55	Pull rope	Soft-Fiber Polyester
						LP220-6,8A	3 + 1 gnd #6,#8, 600 V, RHH/RHW insulation
5353	E-182	53	RGS conduit	0.00	879.42	Pull rope	Soft-Fiber Polyester
5354	E-182	53	RGS conduit	324.29	879.42	Pull rope	Soft-Fiber Polyester
						LP220-6,8	1-3/C + gnd #6, 600 V, EPR insulation
5355	E-182	53	RGS conduit	0.00	879.42	Pull rope	Soft-Fiber Polyester
5356	E-182	53	RGS conduit	0.00	879.42	Pull rope	Soft-Fiber Polyester
5357	E-182	41	RGS conduit	212.85	534.55	A-3039-2	3 + 1 gnd #6,#8, 600 V, RHH/RHW insulation
						Pull rope	Soft-Fiber Polyester
5358	E-182	41	RGS conduit	0.00	534.55	Pull rope	Soft-Fiber Polyester
5359	E-182	53	RGS conduit	851.47	879.42	A-3039-3	1-3/C + gnd #6, 600 V, EPR insulation
						A-3039-1	1-3/C + gnd #2, 600 V, EPR insulation
						Pull rope	Soft-Fiber Polyester
5360	E-182	53	RGS conduit	648.58	879.42	Pull rope	Soft-Fiber Polyester
						A-3039-3	1-3/C + gnd #6, 600 V, EPR insulation
						A-3040-3	1-3/C + gnd #6, 600 V, EPR insulation

CONDUIT DATA

Conduit No	Reference	Size	Type	Total Fill (mm²)	Allowable Fill (mm²)	Included Cable No.	Conductor Type
5363	E-182	41	RGS conduit	212.85	534.55	A-2012-2	3 + 1 gnd #6, #8, 600 V, RHH/RHW insulation
						Pull rope	Soft-Fiber Polyester
5364	E-182	41	RGS conduit	227.46	534.55	Pull rope	Soft-Fiber Polyester
						UP205-4	1-2/C + gnd #8,600 V, EPR insulation
5365	E-182	53	RGS conduit	227.46	879.42	UP205-4	1-2/C + gnd #8,600 V, EPR insulation
						Pull rope	Soft-Fiber Polyester
5366	E-182	53	RGS conduit	527.18	879.42	A-2012-1	1-3/C + gnd #2, 600 V, EPR insulation
						Pull rope	Soft-Fiber Polyester
5367	E-182	53	RGS conduit	196.20	879.42	2155	1 - 2 pair, shielded #18 with IS/OA , 300V, PVC jacket
						Pull rope	Soft-Fiber Polyester
						2146	1 - 2 pair, shielded #18 with IS/OA , 300V, PVC jacket
5368	E-182	53	RGS conduit	0.00	879.42	Pull rope	Soft-Fiber Polyester
5369	E-182	53	RGS conduit	227.46	879.42	Pull rope	Soft-Fiber Polyester
						UP205-2	1-2/C + gnd #8,600 V, EPR insulation
5370	E-182	53	RGS conduit	0.00	879.42	Pull rope	Soft-Fiber Polyester
5371	E-182	53	RGS conduit	227.46	879.42	UP205-2	1-2/C + gnd #8,600 V, EPR insulation
						Pull rope	Soft-Fiber Polyester
5372	E-182	53	RGS conduit	0.00	879.42	Pull rope	Soft-Fiber Polyester
5373	E-182	53	RGS conduit	98.10	879.42	2145	1 - 2 pair, shielded #18 with IS/OA, 300V, PVC jacket
						Pull rope	Soft-Fiber Polyester
5374	E-182	53	RGS conduit	0.00	879.42	Pull rope	Soft-Fiber Polyester
5375	E-182	53	RGS conduit	0.00	879.42	Pull rope	Soft-Fiber Polyester
5378	E-185	78	RGS conduit	0.00	1935.24	Pull rope	Soft-Fiber Polyester
5379	E-185	78	RGS conduit	0.00	1935.24	Pull rope	Soft-Fiber Polyester
5380	E-182	53	RGS conduit	0.00	879.42	Pull rope	Soft-Fiber Polyester
5381	E-182	41	RGS conduit	0.00	534.55	Pull rope	Soft-Fiber Polyester
5382	E-182	41	RGS conduit	0.00	534.55	Pull rope	Soft-Fiber Polyester
5383	E-182	78	RGS conduit	0.00	1935.24	Pull rope	Soft-Fiber Polyester
5384	E-182	53	RGS conduit	0.00	879.42	Pull rope	Soft-Fiber Polyester
5385	E-182	53	RGS conduit	0.00	879.42	Pull rope	Soft-Fiber Polyester
5386	E-182	53	RGS conduit	0.00	879.42	Pull rope	Soft-Fiber Polyester
5387	E-182	41	RGS conduit	212.85	534.55	A-3040-2	3 + 1 gnd #6,#8, 600 V, RHH/RHW insulation
						Pull rope	Soft-Fiber Polyester

For continuation, see next sheet.

CONDUIT AND TRAY SCHEDULE

E-442

DATE REVISED	REVISED BY	DATE 8/02	PBP
8/02	AB	CALCULATED/ DESIGNED BY	CHECKED BY

DESIGN OVERSIGHT
BEHZAD GOLEMOHAMMADI

STATE OF CALIFORNIA - DEPARTMENT OF TRANSPORTATION
Caltrans

LAST REVISION 00-00-00
DATE PLOTTED => 4/4/2008
TIME PLOTTED => 5:13:03 PM

FOR REDUCED PLANS ORIGINAL SCALE IS IN MILLIMETERS 0 20 40 60 80

DGN FILE =>T:\13103\MS\pse\SAS Struc\CCO\SAS CCO42\04-0120f1_0397R01.dgn
USERNAME =>llorico

CU 04251 EA 0120F1

DIST	COUNTY	ROUTE	KILOMETER POST TOTAL PROJECT	SHEET No	TOTAL SHEETS
04	SF	80	13.2/13.9	399R1	1204

REGISTERED ELECTRICAL ENGINEER 12/19/02 DATE

12-6-04
PLANS APPROVAL DATE

REGISTERED PROFESSIONAL ENGINEER JENS ERLINGSSON No. 8249 Exp. 9/30/06 ELECTRICAL STATE OF CALIFORNIA

PB POWER, Inc.
A Parsons Brinckerhoff Company
303 Second St., Suite 700N
San Francisco, CA 94107-1317

The State of California or its officers or agents shall not be responsible for the accuracy or completeness of electronic copies of this plan sheet.

Caltrans now has a web site! To get to the web site, go to http://www.dot.ca.gov

Caltrans Metric

REQUEST FOR INFORMATION NOT ADDRESSED IN THIS CCO REMAIN IN FORCE

MARK	DATE	DESCRIPTIONS	BY	CH'D	CCO#
1	02/19/08	ELECTRICAL MODIFICATIONS	MP EL	RR	42

REVISIONS

CONTRACT CHANGE ORDER NO. _____
SHEET _____ OF _____

REGISTERED PROFESSIONAL ENGINEER MARNELL FUMIO TAKAKI No. E 8651 Exp. 9/30/2008 ELECTRICAL STATE OF CALIFORNIA

FOR REVISION ONLY

CONDUIT DATA

Conduit No	Reference	Size	Type	Total Fill (mm²)	Allowable Fill (mm²)	Included Cable No.	Conductor Type
5456	E-184	53	RGS conduit	366.10	879.42	A-3036-1	1-3/C + gnd #4 , 600 V, EPR insulation
						Pull rope	Soft-Fiber Polyester
5457	E-184	53	RGS conduit	98.10	879.42	2149	1 - 2 pair, shielded #18 with IS/OA, 300 V, PVC jacket
						Pull rope	Soft-Fiber Polyester
5458	E-184	53	RGS conduit	0.00	879.42	Pull rope	Soft-Fiber Polyester
5459	E-184	41	RGS conduit	0.00	534.55	Pull rope	Soft-Fiber Polyester
5460	E-184	41	RGS conduit	227.46	534.55	Pull rope	Soft-Fiber Polyester
						UP208-2A	1-2/C + gnd #8, 600 V, EPR insulation
5461	E-184	53	RGS conduit	0.00	879.42	Pull rope	Soft-Fiber Polyester
5462	E-184	53	RGS conduit	227.46	879.42	Pull rope	Soft-Fiber Polyester
						UP208-2A	1-2/C + gnd #8, 600 V, EPR insulation
5463	E-184	53	RGS conduit	98.10	879.42	2148	1 - 2 pair, shielded #18 with IS/OA, 300 V, PVC jacket
						Pull rope	Soft-Fiber Polyester
5464	E-184	53	RGS conduit	0.00	879.42	Pull rope	Soft-Fiber Polyester
5465	E-184	53	RGS conduit	0.00	879.42	Pull rope	Soft-Fiber Polyester
5466	E-184	53	RGS conduit	0.00	879.42	Pull rope	Soft-Fiber Polyester
5471	E-184	41	RGS conduit	212.85	534.55	Pull rope	Soft-Fiber Polyester
						LP222-2,4A	3 + 1 gnd #6, #8, 600 V, RHH/RHW insulation
5472	E-184	41	RGS conduit	212.85	534.55	Pull rope	Soft-Fiber Polyester
						LP222-6,8A	3 + 1 gnd #6, #8, 600 V, RHH/RHW insulation
5473	E-184	53	RGS conduit	324.29	879.42	Pull rope	Soft-Fiber Polyester
						LP222-2,4	1-3/C + gnd #6, 600 V, EPR insulation
5474	E-184	53	RGS conduit	324.29	879.42	Pull rope	Soft-Fiber Polyester
						LP222-6,8	1-3/C + gnd #6, 600 V, EPR insulation
5475	E-184	53	RGS conduit	0.00	879.42	Pull rope	Soft-Fiber Polyester
5476	E-184	53	RGS conduit	0.00	879.42	Pull rope	Soft-Fiber Polyester
5477	E-184	41	RGS conduit	0.00	534.55	Pull rope	Soft-Fiber Polyester
5478	E-184	41	RGS conduit	0.00	534.55	Pull rope	Soft-Fiber Polyester
5479	E-184	53	RGS conduit	0.00	879.42	Pull rope	Soft-Fiber Polyester
5480	E-184	53	RGS conduit	0.00	879.42	Pull rope	Soft-Fiber Polyester
5481	E-184	53	RGS conduit	0.00	879.42	Pull rope	Soft-Fiber Polyester
5482	E-184	53	RGS conduit	0.00	879.42	Pull rope	Soft-Fiber Polyester
5483	E-184	41	RGS conduit	0.00	534.55	Pull rope	Soft-Fiber Polyester
5484	E-184	41	RGS conduit	0.00	534.55	Pull rope	Soft-Fiber Polyester
5485	E-184	53	RGS conduit	0.00	879.42	Pull rope	Soft-Fiber Polyester
5486	E-184	53	RGS conduit	0.00	879.42	Pull rope	Soft-Fiber Polyester
5487	E-184	53	RGS conduit	0.00	879.42	Pull rope	Soft-Fiber Polyester
5488	E-184	53	RGS conduit	0.00	879.42	Pull rope	Soft-Fiber Polyester
5489	E-184	41	RGS conduit	268.36	534.55	S-2031-4	3 + 1 gnd #4,#8, 600 V, RHH/RHW insulation
						Pull rope	Soft-Fiber Polyester
5490	E-184	41	RGS conduit	212.85	534.55	Pull rope	Soft-Fiber Polyester
						A-2035-4	3 + 1 gnd #6,#8, 600 V, RHH/RHW insulation
5491	E-184	53	RGS conduit	0.00 (1)	879.42	Pull rope	Soft-Fiber Polyester
5492	E-184	53	RGS conduit	0.00	879.42	Pull rope	Soft-Fiber Polyester

CONDUIT DATA

Conduit No	Reference	Size	Type	Total Fill (mm²)	Allowable Fill (mm²)	Included Cable No.	Conductor Type
5493	E-184	53	RGS conduit	0.00	879.42	Pull rope	Soft-Fiber Polyester
5494	E-184	53	RGS conduit	0.00	879.42	Pull rope	Soft-Fiber Polyester
5495	E-184	41	RGS conduit	0.00	534.55	Pull rope	Soft-Fiber Polyester
5497	E-184	53	RGS conduit	0.00	879.42	Pull rope	Soft-Fiber Polyester
5498	E-183	53	RGS conduit	0.00	879.42	Pull rope	Soft-Fiber Polyester
5501	E-185	41	RGS conduit	0.00	534.55	Pull rope	Soft-Fiber Polyester
5502	E-185	41	RGS conduit	0.00	534.55	Pull rope	Soft-Fiber Polyester
5503	E-185	53	RGS conduit	0.00	879.42	Pull rope	Soft-Fiber Polyester
5504	E-185	53	RGS conduit	0.00	879.42	Pull rope	Soft-Fiber Polyester
5505	E-185	53	RGS conduit	0.00	879.42	Pull rope	Soft-Fiber Polyester
5506	E-185	53	RGS conduit	0.00	879.42	Pull rope	Soft-Fiber Polyester
5512	E-185	41	RGS conduit	212.85	534.55	Pull rope	Soft-Fiber Polyester
						A-2014-2	3 + 1 gnd #6,#8, 600 V, RHH/RHW insulation
5513	E-185	53	RGS conduit	0.00	879.42	Pull rope	Soft-Fiber Polyester
5514	E-185	53	RGS conduit	0.00	879.42	Pull rope	Soft-Fiber Polyester
5515	E-185	53	RGS conduit	0.00	879.42	Pull rope	Soft-Fiber Polyester
5516	E-185	53	RGS conduit	0.00	879.42	Pull rope	Soft-Fiber Polyester
5517	E-185	53	RGS conduit	0.00	879.42	Pull rope	Soft-Fiber Polyester
5518	E-185	53	RGS conduit	0.00	879.42	Pull rope	Soft-Fiber Polyester
5519	E-185	41	RGS conduit	212.85	534.55	S-2032-2	3 + 1 gnd #6,#8, 600 V, RHH/RHW insulation
						Pull rope	Soft-Fiber Polyester
5520	E-185	41	RGS conduit	0.00	534.55	Pull rope	Soft-Fiber Polyester
5521	E-185	53	RGS conduit	366.10	879.42	Pull rope	Soft-Fiber Polyester
						S-2032-1	1-3/C + gnd #4, 600 V, EPR insulation
5522	E-185	53	RGS conduit	0.00	879.42	Pull rope	Soft-Fiber Polyester
5523	E-185	53	RGS conduit	0.00	879.42	Pull rope	Soft-Fiber Polyester
5524	E-185	53	RGS conduit	0.00	879.42	Pull rope	Soft-Fiber Polyester
5528	E-185	41	RGS conduit	0.00	534.55	Pull rope	Soft-Fiber Polyester

For continuation, see next sheet.

CONDUIT AND TRAY SCHEDULE

E-444

STATE OF CALIFORNIA - DEPARTMENT OF TRANSPORTATION
Caltrans

DESIGN OVERSIGHT
BEHZAD GOLEMOHAMMADI

CALCULATED/ DESIGNED BY	CHECKED BY	REVISED BY	DATE REVISED
PBP	AB	DATE 8/02	8/02

LAST REVISION 00-00-00
DATE PLOTTED => 4/4/2008
TIME PLOTTED => 5:13:22 PM

DIST	COUNTY	ROUTE	KILOMETER POST TOTAL PROJECT	SHEET No	TOTAL SHEETS
04	SF	80	13.2/13.9	407R1	1204

REQUEST FOR INFORMATION NOT ADDRESSED IN THIS CCO REMAIN IN FORCE

MARK	DATE	DESCRIPTIONS	BY	CH'D	CCO#
1	02/19/08	ELECTRICAL MODIFICATIONS	MP EL	RR	42

REVISIONS

CONTRACT CHANGE ORDER NO._____
SHEET _____ OF _____

REGISTERED PROFESSIONAL ENGINEER MAXWELL FUMIO TAKATA No. E 8651 Exp. 9/30/2008 ELECTRICAL STATE OF CALIFORNIA

FOR REVISION ONLY

Caltrans Metric

12/19/02
REGISTERED ELECTRICAL ENGINEER DATE

REGISTERED PROFESSIONAL ENGINEER JENS ERLINGSSON No. 8249 Exp. 9/30/06 ELECTRICAL STATE OF CALIFORNIA

12-6-04
PLANS APPROVAL DATE

PB POWER, Inc.
A Parsons Brinckerhoff Company
303 Second St., Suite 700N
San Francisco, CA 94107-1317

The State of California or its officers or agents shall not be responsible for the accuracy or completeness of electronic copies of this plan sheet.

Caltrans now has a web site! To get to the web site, go to http://www.dot.ca.gov

CONDUIT DATA

Conduit No	Reference	Size	Type	Total Fill (mm²)	Allowable Fill (mm²)	Included Cable No.	Conductor Type
3177A	E-264A	78	Liquidtight flex metal conduit	1853.73	1928.98	2119-B	3+1gnd, #250 kcmil, #1/0, 600V, EPR insulation
						2204-2	1-3/C #16, 600V, EPR Insulation
						1201-2	1-2/C + gnd #8, 600V, EPR Insulation
						A-3057-1	1-3/C + gnd #2, 600V, EPR Insulation
3177B	E-264A, E-182	78	RGS - PVC coated conduit	1853.73	1935.24	2119-B	3+1gnd, #250 kcmil, #1/0, 600V, EPR insulation
						2204-2	1-3/C #16, 600V, EPR Insulation
						1201-2	1-2/C + gnd #8, 600V, EPR Insulation
						A-3057-1	1-3/C + gnd #2, 600V, EPR Insulation
3278A	E-264A	78	Liquidtight flex metal conduit	1827.85	1928.98	2123-2	1-3/C + gnd #2/0, 600V, EPR Insulation
						2123-3	1-3/C + gnd #2/0, 600V, EPR Insulation
						2910-11	1-3/C #16, 600V, EPR Insulation
3278B	E-264A, E-182	78	RGS - PVC coated conduit	1827.85	1953.24	2123-2	1-3/C + gnd #2/0, 600V, EPR Insulation
						2123-3	1-3/C + gnd #2/0, 600V, EPR Insulation
						2910-11	1-3/C #16, 600V, EPR Insulation
3294A	E-264A	78	Liquidtight flex metal conduit		1928.98	Pull rope	Soft-fiber polyester
3294B	E-264A, E-182	78	RGS - PVC coated conduit		1935.24	Pull rope	Soft-fiber polyester
1 3294C	E-287	41	RGS - PVC coated conduit	170.36	534.55	2120-1	1-3/C #14, 600V, EPR Insulation
						2120-2	1-3/C #14, 600V, EPR Insulation
3319A	E-264A	78	Liquidtight flex metal conduit	1849.08	1928.98	2121	1-3/C + gnd #1/0, 600V, EPR Insulation
						2121-1	1-3/C #14, 600V, EPR Insulation
						2120	1-3/C + gnd #1/0, 600V, EPR Insulation
						2121-2	1-3/C #14, 600V, EPR Insulation
						2120-1	1-3/C #14, 600V, EPR Insulation
						2120-2	1-3/C #14, 600V, EPR Insulation
3319B	E-264A, E-182	78	RGS - PVC coated conduit	1849.08	1935.24	2121	1-3/C + gnd #1/0, 600V, EPR Insulation
						2121-1	1-3/C #14, 600V, EPR Insulation
						2120	1-3/C + gnd #1/0, 600V, EPR Insulation
						2121-2	1-3/C #14, 600V, EPR Insulation
						2120-1	1-3/C #14, 600V, EPR Insulation
						2120-2	1-3/C #14, 600V, EPR Insulation
3322A	E-264A	78	Liquidtight flex metal conduit	1853.73	1928.98	2119-A	3+1gnd, #250 kcmil, #1/0, 600V, EPR insulation
						2123	1-3/C + gnd #2, 600V, EPR Insulation
						1201-1	1-2/C + gnd #8, 600V, EPR Insulation
						2204-1	1-3/C #16, 600V, EPR Insulation
3322B	E-264A, E-182	78	RGS - PVC coated conduit	1853.73	1935.24	2119-A	3+1gnd, #250 kcmil, #1/0, 600V, EPR insulation
						2123	1-3/C + gnd #2, 600V, EPR Insulation
						1201-1	1-2/C + gnd #8, 600V, EPR Insulation
						2204-1	1-3/C #16, 600V, EPR Insulation
3330A	E-264A	78	Liquidtight flex metal conduit	552.33	1928.98	CCTVE01BA	TVP
						CCTVE01BB	TVCP
						CCTVE01AA	TVP
						CCTVE01AB	TVCP
						GND	1-#250 kcmil, bare copper
3330B	E-264A, E-182	78	RGS - PVC coated conduit	552.33	1935.24	CCTVE01BA	TVP
						CCTVE01BB	TVCP
						CCTVE01AA	TVP
						CCTVE01AB	TVCP
						GND	1-#250 kcmil, bare copper
3339A	E-264A	78	Liquidtight flex metal conduit	1432.01	1928.98	2125	3+1gnd, #250 kcmil, #1/0, 600V, EPR insulation
						1201-6	1-2/C + gnd #8, 600V, EPR Insulation
						GND	1-#250 kcmil, bare copper

CONDUIT DATA

Conduit No	Reference	Size	Type	Total Fill (mm²)	Allowable Fill (mm²)	Included Cable No.	Conductor Type
3339B	E-264A, E-182	78	RGS - PVC coated conduit	1432.01	1935.24	2125	3+1gnd, #250 kcmil, #1/0, 600V, EPR insulation
						1201-6	1-2/C + gnd #8, 600V, EPR Insulation
						GND	1-#250 kcmil, bare copper
3348A	E-264A	78	Liquidtight flex metal conduit		1928.98	Pull rope	Soft-fiber polyester
3348B	E-264A, E-182	78	RGS - PVC coated conduit		1935.24	Pull rope	Soft-fiber polyester
3349A	E-264A	78	Liquidtight flex metal conduit		1928.98	Pull rope	Soft-fiber polyester
3349B	E-264A, E-182	78	RGS - PVC coated conduit		1935.24	Pull rope	Soft-fiber polyester
3359A	E-264A	78	Liquidtight flex metal conduit	648.52	1928.98	CCTVE01AC	TVC
						CCTVE01AD	TVL
						MVDSE02A	MVDS DLC
						MVDSE03A	MVDS DLC
						CCTVE01BC	TVC
						CCTVE01BD	TVL
3359B	E-264A, E-182	78	RGS - PVC coated conduit	648.52	1935.24	CCTVE01AC	TVC
						CCTVE01AD	TVL
						MVDSE02A	MVDS DLC
						MVDSE03A	MVDS DLC
						CCTVE01BC	TVC
						CCTVE01BD	TVL
8011A	E-264A	78	Liquidtight flex metal conduit		1928.98	Pull rope	Soft-fiber polyester
8011B	E-264A, E-182	78	RGS - PVC coated conduit		1935.24	Pull rope	Soft-fiber polyester
9057A	E-264A	78	Liquidtight flex metal conduit	442.35	1928.98	2910-12	4 pair #22, shielded pairs, 300V, PE insulation
						2910-8	4 pair #22, shielded pairs, 300V, PE insulation
						2910-7	4 pair #24, overall shielded, 300V, PE insulation
						2119-2	4 pair #22, shielded pairs, 300V, PE insulation
9057B	E-264A, E-182	78	RGS - PVC coated conduit	442.35	1935.24	2910-12	4 pair #22, shielded pairs, 300V, PE insulation
						2910-8	4 pair #22, shielded pairs, 300V, PE insulation
						2910-7	4 pair #24, overall shielded, 300V, PE insulation
						2119-2	4 pair #22, shielded pairs, 300V, PE insulation
9057C	E-264A, E-366	21	RGS - PVC coated conduit	62.07	187.69	2910-11	1-3/C #16, 600V, EPR Insulation

CONDUIT AND TRAY SCHEDULE

E-449C

CALCULATED/DESIGNED BY	EJL	DATE 3/04	REVISED BY
CHECKED BY	JE	3/04	DATE REVISED

DESIGN OVERSIGHT
BEHZAD GOLEMOHAMMADI

STATE OF CALIFORNIA - DEPARTMENT OF TRANSPORTATION
Caltrans

LAST REVISION 00-00-00
DATE PLOTTED => 4/4/2008
TIME PLOTTED => 5:13:43 PM

FOR REDUCED PLANS ORIGINAL SCALE IS IN MILLIMETERS 0 20 40 60 80

DGN FILE =>T:\13103\MS\pse\SAS Struc\CCO\SAS CCO42\04-0120f1_0407R01.dgn
USERNAME =>llorico

CU 04251

EA 0120F1

DIST	COUNTY	ROUTE	KILOMETER POST TOTAL PROJECT	SHEET No	TOTAL SHEETS
04	SF	80	13.2/13.9	407S1	1204

REGISTERED ELECTRICAL ENGINEER 8/31/07 DATE

PLANS APPROVAL DATE

REGISTERED PROFESSIONAL ENGINEER MARMELL FUMIO TAKAKI No. E 8651 Exp. 9/30/2008 ELECTRICAL STATE OF CALIFORNIA

PB AMERICAS, Inc.
A Parsons Brinckerhoff Company
303 Second St., Suite 700N
San Francisco, CA 94107-1317

The State of California or its officers or agents shall not be responsible for the accuracy or completeness of electronic copies of this plan sheet.

Caltrans now has a web site! To get to the web site, go to http://www.dot.ca.gov

Caltrans Metric

REQUEST FOR INFORMATION NOT ADDRESSED IN THIS CCO REMAIN IN FORCE

MARK	DATE	DESCRIPTIONS	BY	CH'D	CCO#
0	02/19/08	ELECTRICAL MODIFICATIONS	MP EL	RR	42

REVISIONS

CONTRACT CHANGE ORDER NO. _____
SHEET _____ OF _____

CONDUIT DATA

Conduit No	Reference	Size	Type	Total Fill (mm²)	Allowable Fill (mm²)	Included Cable No.	Conductor Type
3T20H	E-270C	305	152 mm siderail ladder tray	.00	19354.80		
3T20J	E-270C	305	152 mm siderail ladder tray	.00	19354.80		
3T20K	E-270C	305	152 mm siderail ladder tray	.00	19354.80		
3T20L	E-270C	305	152 mm siderail ladder tray	.00	19354.80		
3T20M	E-270C	305	152 mm siderail ladder tray	.00	19354.80		
3T20N	E-270C	305	152 mm siderail ladder tray	.00	19354.80		
3T20P	E-270C	305	152 mm siderail ladder tray	.00	19354.80		
3T20Q	E-270C	305	152 mm siderail ladder tray	.00	19354.80		
3T20R	E-270C	305	152 mm siderail ladder tray	.00	19354.80		
3T20S	E-270C	305	152 mm siderail ladder tray	.00	19354.80		
3T21A	E-270C	305	152 mm siderail ladder tray	.00	19354.80		
3T21B	E-270C	305	152 mm siderail ladder tray	.00	19354.80		
3T21C	E-270C	305	152 mm siderail ladder tray	.00	19354.80		
3T21D	E-270C	305	152 mm siderail ladder tray	.00	19354.80		
3T21E	E-270C	305	152 mm siderail ladder tray	.00	19354.80		
3T21F	E-270C	305	152 mm siderail ladder tray	.00	19354.80		
3T21G	E-270C	305	152 mm siderail ladder tray	.00	19354.80		
3T21H	E-270C	305	152 mm siderail ladder tray	.00	19354.80		
3T21J	E-270C	305	152 mm siderail ladder tray	.00	19354.80		
3T21K	E-270C	305	152 mm siderail ladder tray	.00	19354.80		
3T21L	E-270C	305	152 mm siderail ladder tray	.00	19354.80		
3T21M	E-270C	305	152 mm siderail ladder tray	.00	19354.80		
3T21N	E-270C	305	152 mm siderail ladder tray	.00	19354.80		
3T21P	E-270C	305	152 mm siderail ladder tray	.00	19354.80		
3T21Q	E-270C	305	152 mm siderail ladder tray	.00	19354.80		
3T21R	E-270C	305	152 mm siderail ladder tray	.00	19354.80		
3T21S	E-270C	305	152 mm siderail ladder tray	.00	19354.80		
3T22A	E-270C	305	152 mm siderail ladder tray	.00	19354.80		
3T22AA	E-270C	305	152 mm siderail ladder tray	.00	19354.80		
3T22B	E-270C	305	152 mm siderail ladder tray	.00	19354.80		
3T22C	E-270C	305	152 mm siderail ladder tray	.00	19354.80		

CONDUIT DATA

Conduit No	Reference	Size	Type	Total Fill (mm²)	Allowable Fill (mm²)	Included Cable No.	Conductor Type
3T22D	E-270C	305	152 mm siderail ladder tray	.00	19354.80		
3T22E	E-270C	305	152 mm siderail ladder tray	.00	19354.80		
3T22F	E-270C	305	152 mm siderail ladder tray	.00	19354.80		
3T22G	E-270C	305	152 mm siderail ladder tray	.00	19354.80		
3T22H	E-270C	305	152 mm siderail ladder tray	.00	19354.80		
3T22J	E-270C	305	152 mm siderail ladder tray	.00	19354.80		
3T22K	E-270C	305	152 mm siderail ladder tray	.00	19354.80		
3T24A	E-270C	305	152 mm siderail ladder tray	.00	19354.80		
3T24AA	E-270C	305	152 mm siderail ladder tray	.00	19354.80		
3T24B	E-270C	305	152 mm siderail ladder tray	.00	19354.80		
3T24C	E-270C	305	152 mm siderail ladder tray	.00	19354.80		
3T24D	E-270C	305	152 mm siderail ladder tray	.00	19354.80		
3T24E	E-270C	305	152 mm siderail ladder tray	.00	19354.80		
3T24F	E-270C	305	152 mm siderail ladder tray	.00	19354.80		
3T24G	E-270C	305	152 mm siderail ladder tray	.00	19354.80		
3T24H	E-270C	305	152 mm siderail ladder tray	.00	19354.80		
3T24J	E-270C	305	152 mm siderail ladder tray	.00	19354.80		
3T24K	E-270C	305	152 mm siderail ladder tray	.00	19354.80		
3T24L	E-270C	305	152 mm siderail ladder tray	.00	19354.80		
3T24M	E-270C	305	152 mm siderail ladder tray	.00	19354.80		
3T24N	E-270C	305	152 mm siderail ladder tray	.00	19354.80		

CONDUIT AND TRAY SCHEDULE

E-449CA

REVISED BY	DATE REVISED

CALCULATED/DESIGNED BY	DATE 3/04
EJL	3/04
CHECKED BY	
JE	

DESIGN OVERSIGHT
BEHZAD GOLEMOHAMMADI

STATE OF CALIFORNIA - DEPARTMENT OF TRANSPORTATION
Caltrans

LAST REVISION 00-00-00
DATE PLOTTED => 4/4/2008
TIME PLOTTED => 5:14:11 PM

FOR REDUCED PLANS ORIGINAL SCALE IS IN MILLIMETERS 0 20 40 60 80

DGN FILE =>T:\13103\MS\pse\SAS Struc\CCO\SAS CCO42\04-0120f1_0407S01.dgn
USERNAME =>llorico

CU 04251

EA 0120F1

DIST	COUNTY	ROUTE	KILOMETER POST TOTAL PROJECT	SHEET No	TOTAL SHEETS
04	SF	80	13.2/13.9	407S2	1204

REGISTERED ELECTRICAL ENGINEER 8/31/07 DATE

PLANS APPROVAL DATE

REGISTERED PROFESSIONAL ENGINEER MARMELL FUMIO TAKAKI No. E 8651 Exp. 9/30/2008 ELECTRICAL STATE OF CALIFORNIA

PB AMERICAS, Inc.
A Parsons Brinckerhoff Company
303 Second St., Suite 700N
San Francisco, CA 94107-1317

The State of California or its officers or agents shall not be responsible for the accuracy or completeness of electronic copies of this plan sheet.

Caltrans now has a web site! To get to the web site, go to http://www.dot.ca.gov

REQUEST FOR INFORMATION NOT ADDRESSED IN THIS CCO REMAIN IN FORCE

MARK	DATE	DESCRIPTIONS	BY	CH'D	CCO#
0	02/19/08	ELECTRICAL MODIFICATIONS	MP EL	RR	42

REVISIONS

CONTRACT CHANGE ORDER NO._____
SHEET _____ OF _____

Caltrans Metric

CONDUIT DATA

Conduit No	Reference	Size	Type	Total Fill (mm2)	Allowable Fill (mm2)	Included Cable No.	Conductor Type
3T24P	E-270C	305	152 mm siderail ladder tray	.00	19354.80		
3T24Q	E-270C	305	152 mm siderail ladder tray	.00	19354.80		
3T24R	E-270C	305	152 mm siderail ladder tray	.00	19354.80		
3T24S	E-270C	305	152 mm siderail ladder tray	.00	19354.80		
3T25A	E-270C	305	152 mm siderail ladder tray	.00	19354.80		
3T25B	E-270C	305	152 mm siderail ladder tray	.00	19354.80		
3T25C	E-270C	305	152 mm siderail ladder tray	.00	19354.80		
3T25D	E-270C	305	152 mm siderail ladder tray	.00	19354.80		
3T25E	E-270C	305	152 mm siderail ladder tray	.00	19354.80		
3T25F	E-270C	305	152 mm siderail ladder tray	.00	19354.80		
3T25G	E-270C	305	152 mm siderail ladder tray	.00	19354.80		
3T25H	E-270C	305	152 mm siderail ladder tray	.00	19354.80		
3T25J	E-270C	305	152 mm siderail ladder tray	.00	19354.80		
3T25K	E-270C	305	152 mm siderail ladder tray	.00	19354.80		
3T25L	E-270C	305	152 mm siderail ladder tray	.00	19354.80		
3T25M	E-270C	305	152 mm siderail ladder tray	.00	19354.80		
3T25N	E-270C	305	152 mm siderail ladder tray	.00	19354.80		
3T25P	E-270C	305	152 mm siderail ladder tray	.00	19354.80		
3T25Q	E-270C	305	152 mm siderail ladder tray	.00	19354.80		
3T25R	E-270C	305	152 mm siderail ladder tray	.00	19354.80		
3T25S	E-270C	305	152 mm siderail ladder tray	.00	19354.80		
3T26A	E-270C	305	152 mm siderail ladder tray	.00	19354.80		
3T26AA	E-270C	305	152 mm siderail ladder tray	.00	19354.80		
3T26B	E-270C	305	152 mm siderail ladder tray	.00	19354.80		
3T26C	E-270C	305	152 mm siderail ladder tray	.00	19354.80		
3T26D	E-270C	305	152 mm siderail ladder tray	.00	19354.80		
3T26E	E-270C	305	152 mm siderail ladder tray	.00	19354.80		
3T26F	E-270C	305	152 mm siderail ladder tray	.00	19354.80		
3T26G	E-270C	305	152 mm siderail ladder tray	.00	19354.80		
3T26H	E-270C	305	152 mm siderail ladder tray	.00	19354.80		
3T26J	E-270C	305	152 mm siderail ladder tray	.00	19354.80		
3T26K	E-270C	305	152 mm siderail ladder tray	.00	19354.80		

CONDUIT DATA

Conduit No	Reference	Size	Type	Total Fill (mm2)	Allowable Fill (mm2)	Included Cable No.	Conductor Type
3T26L	E-270C	305	152 mm siderail ladder tray	.00	19354.80		
3T26M	E-270C	305	152 mm siderail ladder tray	.00	19354.80		
3T26N	E-270C	305	152 mm siderail ladder tray	.00	19354.80		
3T26P	E-270C	305	152 mm siderail ladder tray	.00	19354.80		
3T26Q	E-270C	305	152 mm siderail ladder tray	.00	19354.80		
3T26R	E-270C	305	152 mm siderail ladder tray	.00	19354.80		
3T26S	E-270C	305	152 mm siderail ladder tray	.00	19354.80		
3T27A	E-270C	305	152 mm siderail ladder tray	.00	19354.80		
3T27B	E-270C	305	152 mm siderail ladder tray	.00	19354.80		
3T27C	E-270C	305	152 mm siderail ladder tray	.00	19354.80		
3T27D	E-270C	305	152 mm siderail ladder tray	.00	19354.80		
3T27E	E-270C	305	152 mm siderail ladder tray	.00	19354.80		
3T27F	E-270C	305	152 mm siderail ladder tray	.00	19354.80		
3T27G	E-270C	305	152 mm siderail ladder tray	.00	19354.80		
3T27H	E-270C	305	152 mm siderail ladder tray	.00	19354.80		
3T27J	E-270C	305	152 mm siderail ladder tray	.00	19354.80		
3T27K	E-270C	305	152 mm siderail ladder tray	.00	19354.80		
3T27L	E-270C	305	152 mm siderail ladder tray	.00	19354.80		
3T27M	E-270C	305	152 mm siderail ladder tray	.00	19354.80		
3T27N	E-270C	305	152 mm siderail ladder tray	.00	19354.80		
3T27P	E-270C	305	152 mm siderail ladder tray	.00	19354.80		

CONDUIT AND TRAY SCHEDULE

E-449CB

REVISED BY	DATE REVISED

CALCULATED/DESIGNED BY	DATE 3/04
EJL	3/04

CHECKED BY
JE

DESIGN OVERSIGHT
BEHZAD GOLEMOHAMMADI

STATE OF CALIFORNIA - DEPARTMENT OF TRANSPORTATION
Caltrans

LAST REVISION 00-00-00
DATE PLOTTED => 4/4/2008
TIME PLOTTED => 5:14:30 PM

FOR REDUCED PLANS ORIGINAL SCALE IS IN MILLIMETERS 0 20 40 60 80

DGN FILE =>T:\13103\MS\pse\SAS Struc\CCO\SAS CCO42\04-0120f1_0407S02.dgn
USERNAME =>llorico

CU 04251

EA 0120F1

DIST	COUNTY	ROUTE	KILOMETER POST TOTAL PROJECT	SHEET No	TOTAL SHEETS
04	SF	80	13.2/13.9	407S3	1204

REGISTERED ELECTRICAL ENGINEER 8/31/07 DATE

PLANS APPROVAL DATE

REGISTERED PROFESSIONAL ENGINEER MARWELL FUMIO TAKAKI No. E 8651 Exp. 9/30/2008 ELECTRICAL STATE OF CALIFORNIA

PB AMERICAS, Inc.
A Parsons Brinckerhoff Company
303 Second St., Suite 700N
San Francisco, CA 94107-1317

The State of California or its officers or agents shall not be responsible for the accuracy or completeness of electronic copies of this plan sheet.

Caltrans now has a web site! To get to the web site, go to http://www.dot.ca.gov

REQUEST FOR INFORMATION NOT ADDRESSED IN THIS CCO REMAIN IN FORCE

MARK	DATE	DESCRIPTIONS	BY	CH'D	CCO#
0	02/19/08	ELECTRICAL MODIFICATIONS	MP EL	RR	42

REVISIONS

CONTRACT CHANGE ORDER NO._____
SHEET _____ OF _____

Caltrans Metric

CONDUIT DATA

Conduit No	Reference	Size	Type	Total Fill (mm2)	Allowable Fill (mm2)	Included Cable No.	Conductor Type
3T27Q	E-270C	305	152 mm siderail ladder tray	.00	19354.80		
3T27R	E-270C	305	152 mm siderail ladder tray	.00	19354.80		
3T27S	E-270C	305	152 mm siderail ladder tray	.00	19354.80		
3T42A	E-270C	305	152 mm siderail ladder tray	.00	19354.80		
3T42AA	E-270C	305	152 mm siderail ladder tray	.00	19354.80		
3T42B	E-270C	305	152 mm siderail ladder tray	.00	19354.80		
3T42C	E-270C	305	152 mm siderail ladder tray	.00	19354.80		
3T42D	E-270C	305	152 mm siderail ladder tray	.00	19354.80		
3T42E	E-270C	305	152 mm siderail ladder tray	.00	19354.80		
3T42F	E-270C	305	152 mm siderail ladder tray	.00	19354.80		
3T42G	E-270C	305	152 mm siderail ladder tray	.00	19354.80		
3T42H	E-270C	305	152 mm siderail ladder tray	.00	19354.80		
3T42J	E-270C	305	152 mm siderail ladder tray	.00	19354.80		
3T42K	E-270C	305	152 mm siderail ladder tray	.00	19354.80		
3T42L	E-270C	305	152 mm siderail ladder tray	.00	19354.80		
3T42M	E-270C	305	152 mm siderail ladder tray	.00	19354.80		
3T42N	E-270C	305	152 mm siderail ladder tray	.00	19354.80		
3T42P	E-270C	305	152 mm siderail ladder tray	.00	19354.80		
3T42Q	E-270C	305	152 mm siderail ladder tray	.00	19354.80		
3T42R	E-270C	305	152 mm siderail ladder tray	.00	19354.80		
3T42S	E-270C	305	152 mm siderail ladder tray	.00	19354.80		
3T43A	E-270C	305	152 mm siderail ladder tray	.00	19354.80		
3T43B	E-270C	305	152 mm siderail ladder tray	.00	19354.80		
3T43C	E-270C	305	152 mm siderail ladder tray	.00	19354.80		
3T43D	E-270C	305	152 mm siderail ladder tray	.00	19354.80		
3T43E	E-270C	305	152 mm siderail ladder tray	.00	19354.80		
3T43F	E-270C	305	152 mm siderail ladder tray	.00	19354.80		
3T43G	E-270C	305	152 mm siderail ladder tray	.00	19354.80		
3T43H	E-270C	305	152 mm siderail ladder tray	.00	19354.80		
3T43J	E-270C	305	152 mm siderail ladder tray	.00	19354.80		
3T43K	E-270C	305	152 mm siderail ladder tray	.00	19354.80		

CONDUIT DATA

Conduit No	Reference	Size	Type	Total Fill (mm2)	Allowable Fill (mm2)	Included Cable No.	Conductor Type
3T43L	E-270C	305	152 mm siderail ladder tray	.00	19354.80		
3T43M	E-270C	305	152 mm siderail ladder tray	.00	19354.80		
3T43N	E-270C	305	152 mm siderail ladder tray	.00	19354.80		
3T43P	E-270C	305	152 mm siderail ladder tray	.00	19354.80		
3T43Q	E-270C	305	152 mm siderail ladder tray	.00	19354.80		
3T43R	E-270C	305	152 mm siderail ladder tray	.00	19354.80		
3T43S	E-270C	305	152 mm siderail ladder tray	.00	19354.80		
3T44A	**E-270C**	**305**	**152 mm siderail ladder tray**	**.00**	**19354.80**		
3T44A	E-270C	305	152 mm siderail ladder tray	.00	19354.80		
3T44B	E-270C	305	152 mm siderail ladder tray	.00	19354.80		
3T44C	E-270C	305	152 mm siderail ladder tray	.00	19354.80		
3T44D	E-270C	305	152 mm siderail ladder tray	.00	19354.80		
3T44E	E-270C	305	152 mm siderail ladder tray	.00	19354.80		
3T44F	E-270C	305	152 mm siderail ladder tray	.00	19354.80		
3T44G	E-270C	305	152 mm siderail ladder tray	.00	19354.80		
3T44H	E-270C	305	152 mm siderail ladder tray	.00	19354.80		
3T44J	E-270C	305	152 mm siderail ladder tray	.00	19354.80		
3T44K	E-270C	305	152 mm siderail ladder tray	.00	19354.80		
3T44L	E-270C	305	152 mm siderail ladder tray	.00	19354.80		
3T44M	E-270C	305	152 mm siderail ladder tray	.00	19354.80		
3T44N	E-270C	305	152 mm siderail ladder tray	.00	19354.80		
3T44P	E-270C	305	152 mm siderail ladder tray	.00	19354.80		
3T44Q	E-270C	305	152 mm siderail ladder tray	.00	19354.80		

CONDUIT AND TRAY SCHEDULE

E-449CC

REVISED BY	DATE REVISED

CALCULATED/DESIGNED BY	DATE 3/04
EJL	3/04

CHECKED BY
JE

DESIGN OVERSIGHT
BEHZAD GOLEMOHAMMADI

STATE OF CALIFORNIA - DEPARTMENT OF TRANSPORTATION
Caltrans

LAST REVISION 00-00-00
DATE PLOTTED => 4/4/2008
TIME PLOTTED => 5:14:50 PM

CONDUIT DATA

Conduit No	Reference	Size	Type	Total Fill (mm2)	Allowable Fill (mm2)	Included Cable No.	Conductor Type
3T44R	E-270C	305	152 mm siderail ladder tray	.00	19354.80		
3T44S	E-270C	305	152 mm siderail ladder tray	.00	19354.80		
3T45A	E-270C	305	152 mm siderail ladder tray	.00	19354.80		
3T45B	E-270C	305	152 mm siderail ladder tray	.00	19354.80		
3T45C	E-270C	305	152 mm siderail ladder tray	.00	19354.80		
3T45D	E-270C	305	152 mm siderail ladder tray	.00	19354.80		
3T45E	E-270C	305	152 mm siderail ladder tray	.00	19354.80		
3T45F	E-270C	305	152 mm siderail ladder tray	.00	19354.80		
3T45G	E-270C	305	152 mm siderail ladder tray	.00	19354.80		
3T45H	E-270C	305	152 mm siderail ladder tray	.00	19354.80		
3T45J	E-270C	305	152 mm siderail ladder tray	.00	19354.80		
3T45K	E-270C	305	152 mm siderail ladder tray	.00	19354.80		
3T45L	E-270C	305	152 mm siderail ladder tray	.00	19354.80		
3T45M	E-270C	305	152 mm siderail ladder tray	.00	19354.80		
3T45N	E-270C	305	152 mm siderail ladder tray	.00	19354.80		
3T45P	E-270C	305	152 mm siderail ladder tray	.00	19354.80		
3T45Q	E-270C	305	152 mm siderail ladder tray	.00	19354.80		
3T45R	E-270C	305	152 mm siderail ladder tray	.00	19354.80		
3T45S	E-270C	305	152 mm siderail ladder tray	.00	19354.80		
3T46H	E-270C	305	152 mm siderail ladder tray	.00	19354.80		
3T46J	E-270C	305	152 mm siderail ladder tray	.00	19354.80		
3T46K	E-270C	305	152 mm siderail ladder tray	.00	19354.80		
3T46L	E-270C	305	152 mm siderail ladder tray	.00	19354.80		
3T46M	E-270C	305	152 mm siderail ladder tray	.00	19354.80		
3T46N	E-270C	305	152 mm siderail ladder tray	.00	19354.80		
3T46P	E-270C	305	152 mm siderail ladder tray	.00	19354.80		
3T46Q	E-270C	305	152 mm siderail ladder tray	.00	19354.80		
3T46R	E-270C	305	152 mm siderail ladder tray	.00	19354.80		
3T46S	E-270C	305	152 mm siderail ladder tray	.00	19354.80		
3T47A	E-270C	305	152 mm siderail ladder tray	.00	19354.80		

REQUEST FOR INFORMATION NOT ADDRESSED IN THIS CCO REMAIN IN FORCE

MARK	DATE	DESCRIPTIONS	BY	CH'D	CCO#
0	02/19/08	ELECTRICAL MODIFICATIONS	MP EL	RR	42

REVISIONS

CONTRACT CHANGE ORDER NO. _____
SHEET _____ OF _____

Caltrans Metric

DIST	COUNTY	ROUTE	KILOMETER POST TOTAL PROJECT	SHEET No	TOTAL SHEETS
04	SF	80	13.2/13.9	407S4	1204

REGISTERED ELECTRICAL ENGINEER 8/31/07 DATE

PLANS APPROVAL DATE

REGISTERED PROFESSIONAL ENGINEER MARMELL FUMIO TAKAKI No. E 8651 Exp. 9/30/2008 ELECTRICAL STATE OF CALIFORNIA

PB AMERICAS, Inc.
A Parsons Brinckerhoff Company
303 Second St., Suite 700N
San Francisco, CA 94107-1317

The State of California or its officers or agents shall not be responsible for the accuracy or completeness of electronic copies of this plan sheet.

Caltrans now has a web site! To get to the web site, go to http://www.dot.ca.gov

CONDUIT DATA

Conduit No	Reference	Size	Type	Total Fill (mm2)	Allowable Fill (mm2)	Included Cable No.	Conductor Type
3T47B	E-270C	305	152 mm siderail ladder tray	.00	19354.80		
3T47C	E-270C	305	152 mm siderail ladder tray	.00	19354.80		
3T47D	E-270C	305	152 mm siderail ladder tray	.00	19354.80		
3T47E	E-270C	305	152 mm siderail ladder tray	.00	19354.80		
3T47F	E-270C	305	152 mm siderail ladder tray	.00	19354.80		
3T47G	E-270C	305	152 mm siderail ladder tray	.00	19354.80		
3T47H	E-270C	305	152 mm siderail ladder tray	.00	19354.80		
3T47J	E-270C	305	152 mm siderail ladder tray	.00	19354.80		
3T47K	E-270C	305	152 mm siderail ladder tray	.00	19354.80		
3T47L	E-270C	305	152 mm siderail ladder tray	.00	19354.80		
3T47M	E-270C	305	152 mm siderail ladder tray	.00	19354.80		
3T47N	E-270C	305	152 mm siderail ladder tray	.00	19354.80		
3T47P	E-270C	305	152 mm siderail ladder tray	.00	19354.80		
3T47Q	E-270C	305	152 mm siderail ladder tray	.00	19354.80		
3T47R	E-270C	305	152 mm siderail ladder tray	.00	19354.80		
3T47S	E-270C	305	152 mm siderail ladder tray	.00	19354.80		

CONDUIT AND TRAY SCHEDULE

E-449CD

REVISED BY	DATE REVISED

CALCULATED/DESIGNED BY	CHECKED BY	DATE 3/04
EJL	JE	3/04

DESIGN OVERSIGHT
BEHZAD GOLEMOHAMMADI

STATE OF CALIFORNIA - DEPARTMENT OF TRANSPORTATION
Caltrans

LAST REVISION 00-00-00
DATE PLOTTED => 4/4/2008
TIME PLOTTED => 5:15:12 PM

FOR REDUCED PLANS ORIGINAL SCALE IS IN MILLIMETERS 0 20 40 60 80

DGN FILE =>T:\13103\MS\pse\SAS Struc\CCO\SAS CCO42\04-0120f1_0407S04.dgn
USERNAME =>llorico

CU 04251

EA 0120F1

DIST.	COUNTY	ROUTE	KILOMETER POST TOTAL PROJECT	SHEET NO.	TOTAL SHEETS
04	SF	80	13.2/13.9	577R1	1204

Caltrans Metric

REGISTERED ENGINEER - CIVIL

12-6-04

PLANS APPROVAL DATE

REGISTERED PROFESSIONAL ENGINEER Marwan N. Nader No. C 054426 Exp. 12/31/07 CIVIL STATE OF CALIFORNIA

The State of California or its officers or agents shall not be responsible for the accuracy of this sheet.

T.Y. LIN / MOFFATT & NICHOL
825 BATTERY STREET
SAN FRANCISCO, CA 94111

To get to the web site, go to: http://www.dot.ca.gov

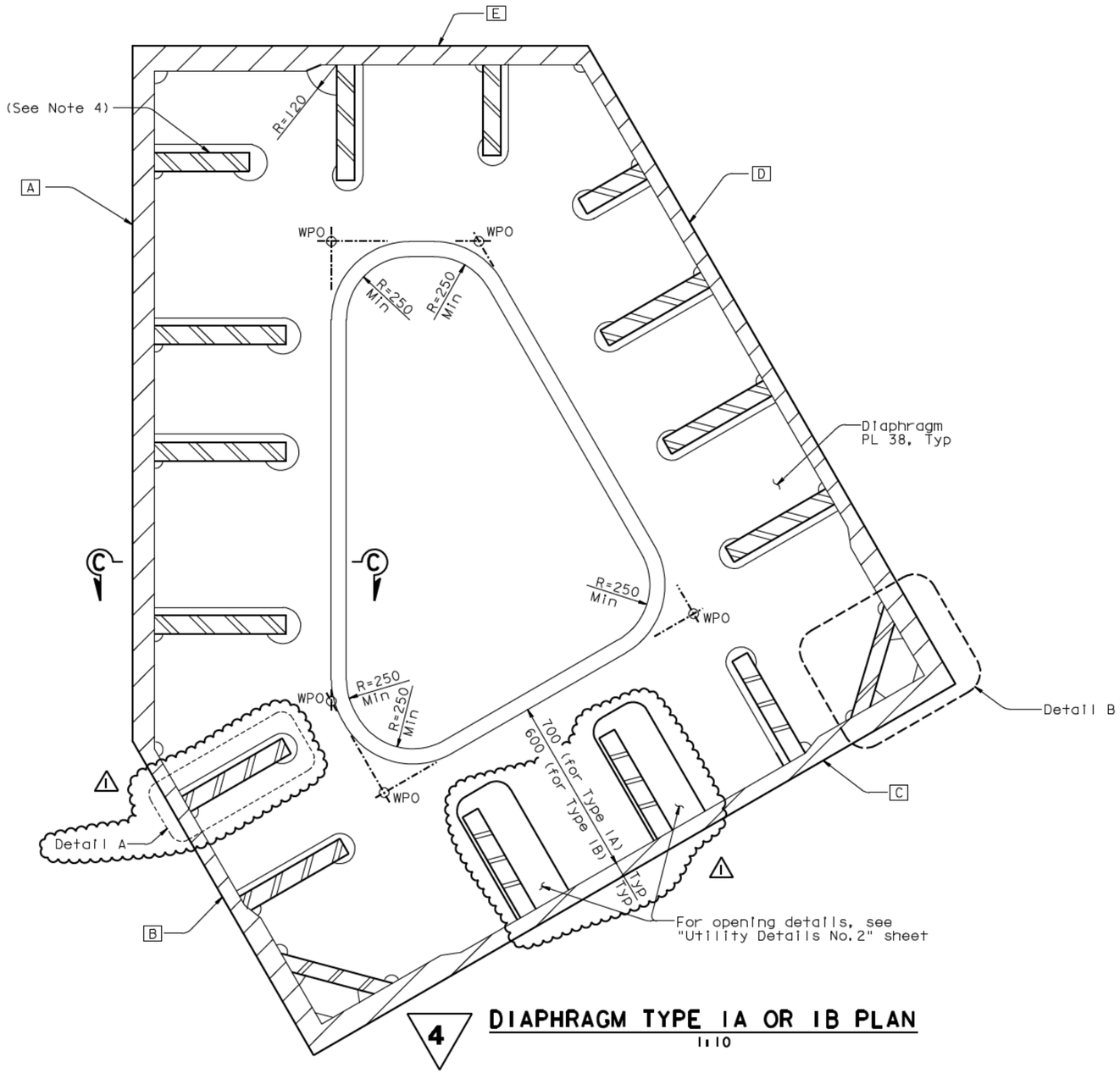

4 DIAPHRAGM TYPE IA OR IB PLAN

1:10

MARK	DATE	DESCRIPTIONS	BY	CH'D	CCO#
1	09/07/07	ELECTRICAL MODIFICATIONS	NV	MN	42

REVISIONS

CONTRACT CHANGE ORDER NO. ____
SHEET ___ OF ___

LEGEND:

- E — Skin Plate Designation
- WPO — Geometric working point for diaphragm opening
- -·-·-·- Working lines for diaphragm opening

NOTES:

1. For details of skin plate and longitudinal stiffeners, see "Tower Shaft Details No.1" sheet.
2. For Details A and B, see "Tower Diaphragm Details No.6" sheet.
3. For Section C-C, see "Tower Diaphragm Details No.8" sheet.
4. Splice of the longitudinal stiffener A1 is allowed to provide access to the diaphragm PL to tower skin plate connection for all type of diaphragms. The splice of the longitudinal stiffener A1 shall be CJP with back-up bar. For longitudinal stiffener definition, see "Tower Shaft Details" sheets.
5. For location and details of tower access, see "Tower Access Details" sheets.
6. For utilities inside tower shaft, see "Road Plans".

4 REVISED PER ADDENDUM NO. 4 DATED DECEMBER 9, 2005

ALL DIMENSIONS ARE IN MILLIMETERS UNLESS OTHERWISE SHOWN

SAN FRANCISCO OAKLAND BAY BRIDGE
EAST SPAN SEISMIC SAFETY PROJECT
SELF-ANCHORED SUSPENSION BRIDGE
(SUPERSTRUCTURE & TOWER)

TOWER DIAPHRAGM DETAILS NO.2

R. Valizadeh/V. Toan/Y.L./W.L./F.C.
DESIGN OVERSIGHT
Roya Valizadeh / Vong Toan / Y. Liu
SIGN OFF DATE 09/07/07

	BY	CHECKED
DESIGN	M. Nader	M. Gulyas
DETAILS	L. Rus	M. Gulyas
QUANTITIES	L. Rus	Y. Zhang

PREPARED FOR THE STATE OF CALIFORNIA DEPARTMENT OF TRANSPORTATION

R. Manzanarez
PROJECT ENGINEER

BRIDGE NO. 34-0006L/R
KILOMETER POST 13.2/13.9

CU 04
EA 0120F1

DISREGARD PRINTS BEARING EARLIER REVISION DATES

REVISION DATES (PRELIMINARY STAGE ONLY): 01/15/99 05/18/99 08/02/99 05/31/01 01/08/02 07/01/02 12/18/02 11/13/05

SHEET 160R1 OF

Rev. Date: 5-18-98

ORIGINAL SCALE IN MILLIMETERS FOR REDUCED PLANS 0 10 20 30 40 50 60 70 80 90 100

FILE -> I:\bb\04-012001\sas\contract plans and cco\cco\in progress\cco#42\dgn\aetdh02.dgn

100 % PS&E

DATE PLOTTED => 07 SEP 2007 TIME PLOTTED => 10:31:01

USERNAME => pfrom

MARK	DATE	DESCRIPTIONS	BY	CH'D	CCO#
2	09/07/07	ELECTRICAL MODIFICATIONS	NV	MN	42
1	06/23/06	NOTE FOR WEB PLATE LINES	MN	NV	21

REVISIONS

CONTRACT CHANGE ORDER NO. ____
SHEET ___ OF ___

Caltrans Metric

DIST.	COUNTY	ROUTE	KILOMETER POST TOTAL PROJECT	SHEET NO.	TOTAL SHEETS
04	SF	80	13.2/13.9	578R2	1204

REGISTERED ENGINEER - CIVIL
12-6-04
PLANS APPROVAL DATE

REGISTERED PROFESSIONAL ENGINEER Marwan N. Nader No. C 054426 Exp. 12/31/07 CIVIL STATE OF CALIFORNIA

The State of California or its officers or agents shall not be responsible for the accuracy or completeness of electronic copies of this plan sheet.

T.Y. LIN / MOFFATT & NICHOL
825 BATTERY STREET
SAN FRANCISCO, CA 94111

To get to the web site, go to: http://www.dot.ca.gov

4 REVISED PER ADDENDUM NO. 4 DATED DECEMBER 9, 2005

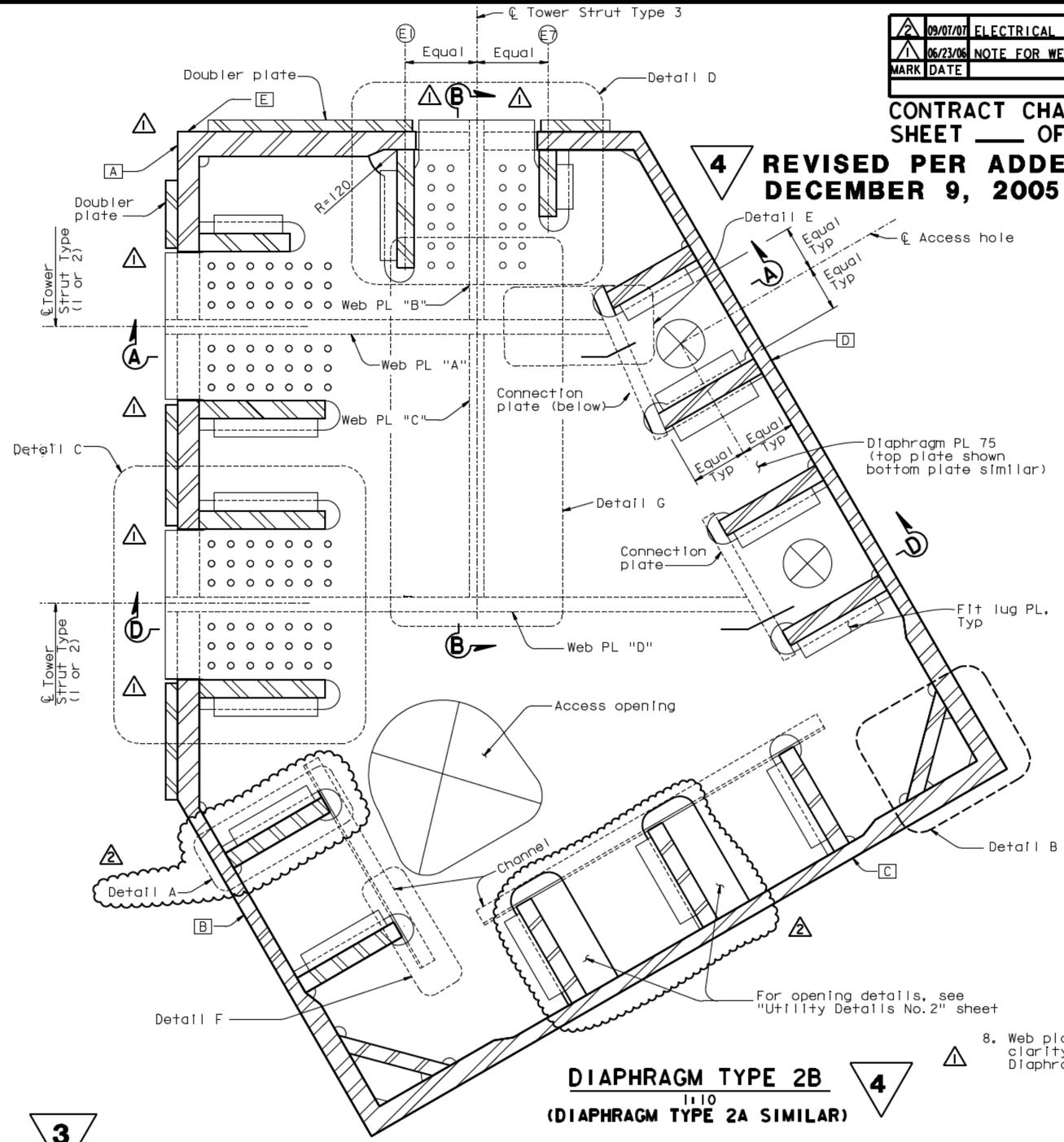

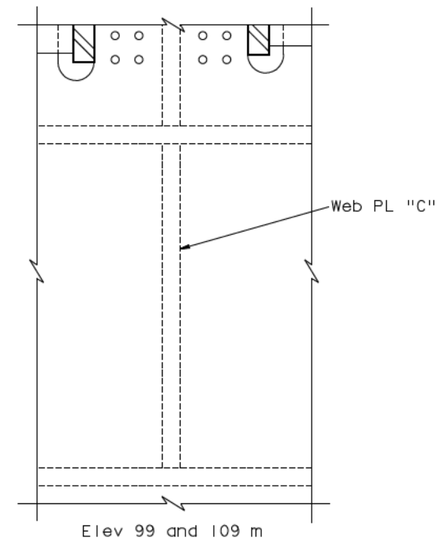

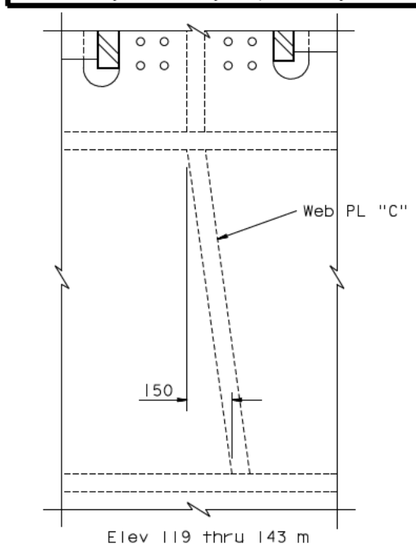

LAYOUT OF WEB PL "C"
DETAIL G
1:10

LEGEND:

- [E] Skin Plate Designation
- ⊗ Access hole 200 Dia

NOTES:

1. For Details A and B, see "Tower Diaphragm Details No. 6" sheet.
2. For Details C and D, see "Tower Diaphragm Details No. 7" sheet.
3. For Details E and F, see "Tower Diaphragm Details No. 12" sheet.
4. For Sections A-A and B-B, see "Tower Diaphragm Details No. 8" sheet.
5. For location and details of tower access, see "Tower Access Details" sheets.
6. For utilities inside tower shaft, see "Road Plans".
7. For Section D-D, see "Tower Diaphragm Details No. 10" sheet.
8. Web plates shown in dashed lines for clarity. For details, see "Tower Diaphragm Details No. 8" sheet.

3

3

DIAPHRAGM TYPE 2B
1:10
(DIAPHRAGM TYPE 2A SIMILAR)

4

3 **REVISED PER ADDENDUM NO. 3 DATED NOVEMBER 7, 2005**

ALL DIMENSIONS ARE IN MILLIMETERS UNLESS OTHERWISE SHOWN

R. Valizadeh/V. Toan/Y.L./W.L./F.C.
DESIGN OVERSIGHT
Y. Liu
SIGN OFF DATE 09/07/07

	BY	CHECKED
DESIGN	M. Nader	M. Gulyas
DETAILS	L. Rus	M. Gulyas
QUANTITIES	L. Rus	Y. Zhang

PREPARED FOR THE STATE OF CALIFORNIA DEPARTMENT OF TRANSPORTATION

R. Manzanarez
PROJECT ENGINEER

BRIDGE NO. 34-0006L/R
KILOMETER POST 13.2/13.9

SAN FRANCISCO OAKLAND BAY BRIDGE
EAST SPAN SEISMIC SAFETY PROJECT
SELF-ANCHORED SUSPENSION BRIDGE
(SUPERSTRUCTURE & TOWER)

TOWER DIAPHRAGM DETAILS NO. 3

Rev. Date: 5-18-98

ORIGINAL SCALE IN MILLIMETERS FOR REDUCED PLANS 0 10 20 30 40 50 60 70 80 90 100

CU 04
EA 0120F1

DISREGARD PRINTS BEARING EARLIER REVISION DATES

REVISION DATES (PRELIMINARY STAGE ONLY): 01/15/99 05/17/99 08/02/99 05/31/01 04/08/02 07/01/02 12/13/02 10/13/05 11/13/05

SHEET 161R2 OF

FILE -> I:\bb\04-012001\sas\contract plans and cco\cco\in progress\cco#42\dgn\aetdh03.dgn

USERNAME => vignatovsi DATE PLOTTED => 07 SEP 2007 TIME PLOTTED => 14:46:54

100 % PS&E

DIST.	COUNTY	ROUTE	KILOMETER POST TOTAL PROJECT	SHEET NO.	TOTAL SHEETS
04	SF	80	13.2/13.9	579R2	1204

REGISTERED ENGINEER - CIVIL

12-6-04

PLANS APPROVAL DATE

REGISTERED PROFESSIONAL ENGINEER Marwan N. Nader No. C 054426 Exp. 12/31/07 CIVIL STATE OF CALIFORNIA

The State of California or its officers or agents shall not be responsible for the accuracy or completeness of electronic copies of this plan sheet.

T.Y. LIN / MOFFATT & NICHOL
825 BATTERY STREET
SAN FRANCISCO, CA 94111

To get to the web site, go to: http://www.dot.ca.gov

MARK	DATE	DESCRIPTIONS	BY	CH'D	CCO#
2	09/07/07	ELECTRICAL MODIFICATIONS	NV	MN	42
1	06/23/06	NOTE FOR WEB PLATE LINES	MN	NV	21

REVISIONS

CONTRACT CHANGE ORDER NO. ____
SHEET ___ OF ___

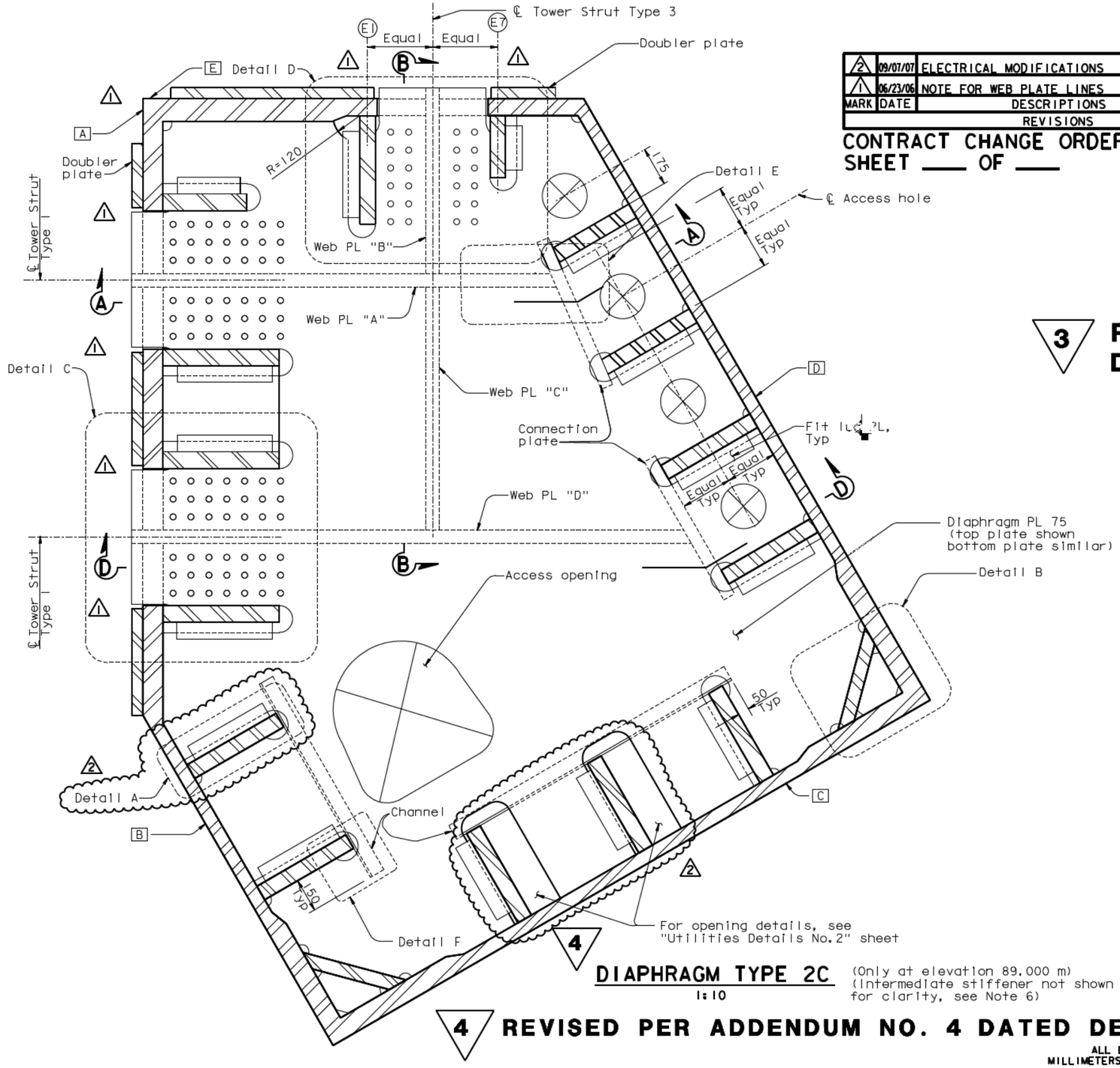

DIAPHRAGM TYPE 2C
1:10

(Only at elevation 89.000 m)
(Intermediate stiffener not shown for clarity, see Note 6)

3 **REVISED PER ADDENDUM NO. 3 DATED NOVEMBER 7, 2005**

4 **REVISED PER ADDENDUM NO. 4 DATED DECEMBER 9, 2005**

LEGEND:

- E Skin Plate Designation
- ⊗ Access hole 200 Dia

NOTES:

1. For Details A and B, see "Tower Diaphragm Details No.6" sheet.
2. For Details C and D, see "Tower Diaphragm Details No.7" sheet.
3. For Details E and F, see "Tower Diaphragm Details No.12" sheet.
4. For Sections A-A and B-B, see "Tower Diaphragm Details No.8" sheet.
5. For location and details of tower access, see "Tower Access Details" sheets.
6. For intermediate stiffener details, see "Tower Diaphragm Details No.12" sheet. (3)
7. For utilities inside tower shaft, see "Road Plans".
8. For Section D-D, see "Tower Diaphragm Details No.10" sheet. (3)
9. Web plates shown in dashed lines for clarity. For details, see "Tower Diaphragm Details No.8" sheet. (1)

ALL DIMENSIONS ARE IN MILLIMETERS UNLESS OTHERWISE SHOWN

R. Valizadeh/V. Toan/Y.L./W.L./F.C.
DESIGN OVERSIGHT
Y. Liu
SIGN OFF DATE 09/07/07

	BY	CHECKED
DESIGN	M. Nader	M. Gulyas
DETAILS	L. Rus	M. Gulyas
QUANTITIES	L. Rus	Y. Zhang

PREPARED FOR THE STATE OF CALIFORNIA DEPARTMENT OF TRANSPORTATION

R. Manzanarez
PROJECT ENGINEER

BRIDGE NO. 34-0006L/R
KILOMETER POST 13.2/13.9

SAN FRANCISCO OAKLAND BAY BRIDGE
EAST SPAN SEISMIC SAFETY PROJECT
SELF-ANCHORED SUSPENSION BRIDGE
(SUPERSTRUCTURE & TOWER)

TOWER DIAPHRAGM DETAILS NO. 4

Rev. Date: 5-18-98

ORIGINAL SCALE IN MILLIMETERS FOR REDUCED PLANS 0 10 20 30 40 50 60 70 80 90 100

CU 04
EA 0120F1

DISREGARD PRINTS BEARING EARLIER REVISION DATES

REVISION DATES (PRELIMINARY STAGE ONLY): 08/02/99 05/24/01 04/08/02 07/24/02 12/18/02 10/23/05 11/13/05

SHEET 162R2 OF

FILE -> I:\bb\04-012001\sas\contract plans and cco\cco\in progress\cco#42\dgn\aetdh04.dgn

100 % PS&E

DATE PLOTTED => 07 SEP 2007 TIME PLOTTED => 10:34:12

USERNAME => ptom

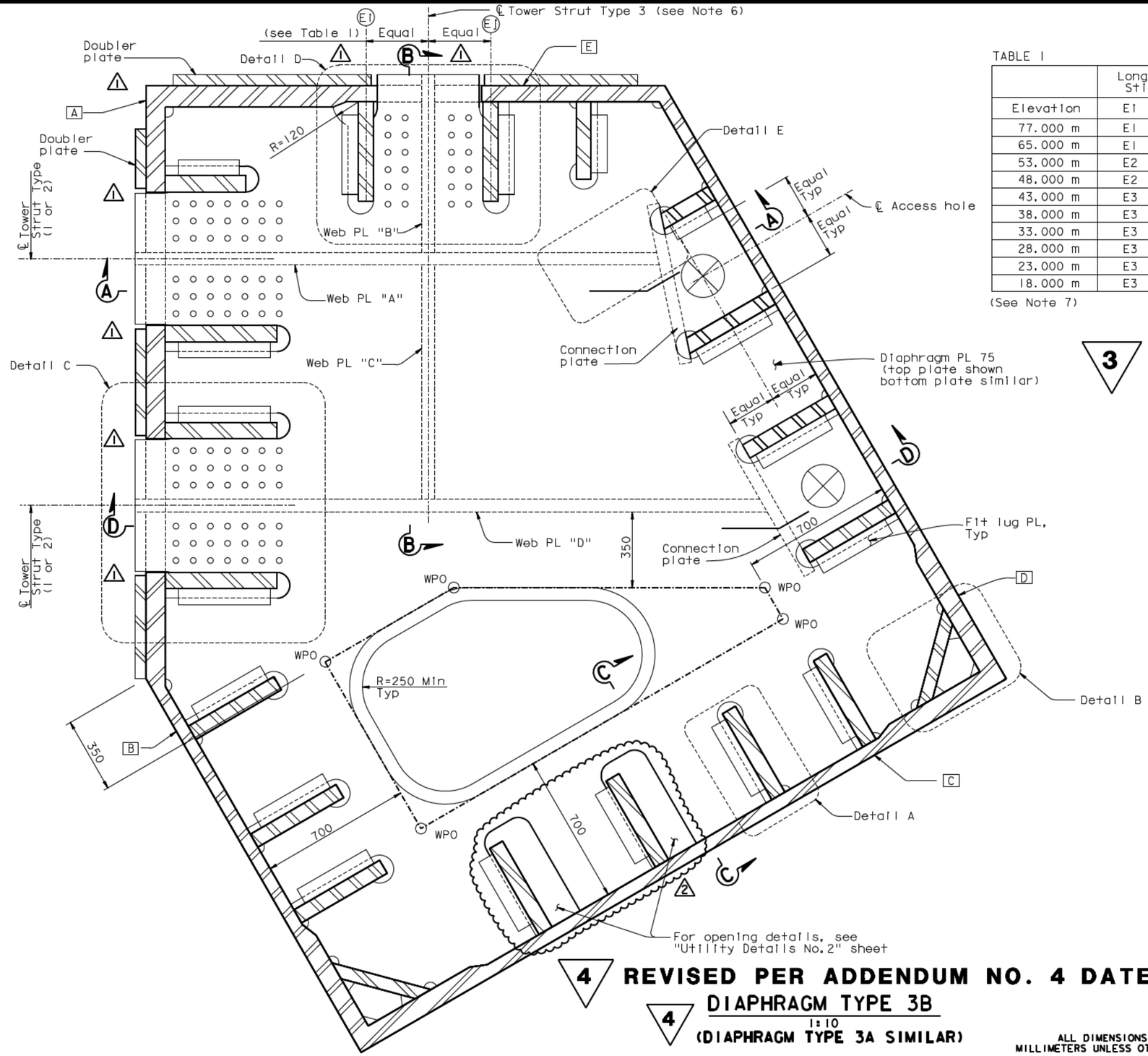

TABLE 1

	Longitudinal Stiffener	
Elevation	E1	E2
77.000 m	E1	E2
65.000 m	E1	E2
53.000 m	E2	E3
48.000 m	E2	E3
43.000 m	E3	E4
38.000 m	E3	E4
33.000 m	E3	E4
28.000 m	E3	E4
23.000 m	E3	E4
18.000 m	E3	E4

(See Note 7)

DIST.	COUNTY	ROUTE	KILOMETER POST TOTAL PROJECT	SHEET NO.	TOTAL SHEETS
04	SF	80	13.2/13.9	580R2	1204

Caltrans Metric

REGISTERED ENGINEER - CIVIL

12-6-04

PLANS APPROVAL DATE

The State of California or its officers or agents shall not be responsible for the accuracy or completeness of electronic copies of this plan sheet.

REGISTERED PROFESSIONAL ENGINEER Marwan N. Nader No. C 054426 Exp. 12/31/07 CIVIL STATE OF CALIFORNIA

T.Y. LIN / MOFFATT & NICHOL
825 BATTERY STREET
SAN FRANCISCO, CA 94111

To get to the web site, go to: http://www.dot.ca.gov

MARK	DATE	DESCRIPTIONS	BY	CH'D	CCO#
2	09/07/07	ELECTRICAL MODIFICATIONS	NV	MN	42
1	06/23/06	NOTE FOR WEB PLATE LINES	MN	NV	21

REVISIONS

CONTRACT CHANGE ORDER NO. _____
SHEET ____ OF ____

3 **REVISED PER ADDENDUM NO. 3 DATED NOVEMBER 7, 2005**

LEGEND:

- E — Skin Plate Designation
- WPO — Geometric working point for diaphragm opening
- Working lines for diaphragm opening
- Access hole 200 Dia

NOTES:

1. For Details A and B, see "Tower Diaphragm Details No.6" sheet.
2. For Details C and D, see "Tower Diaphragm Details No.7" sheet.
3. For Detail E, see "Tower Diaphragm Details No.12" sheet.
4. For Sections A-A, B-B and C-C see "Tower Diaphragm Details No.8" sheet.
5. For location and details of tower access, see "Tower Access Details" sheets.
6. For location of tower strut type 3, see "Tower Shaft Details No.7" and "Tower Strut Details No.1" sheets.
7. For utilities inside tower shaft, see "Road Plans".
8. For Section D-D, see "Tower Diaphragm Details No.10" sheet.
9. Web plates shown in dashed lines for clarity. For details, see "Tower Diaphragm Details No.8" sheet.

4 **REVISED PER ADDENDUM NO. 4 DATED DECEMBER 9, 2005**

4 DIAPHRAGM TYPE 3B
1:10
(DIAPHRAGM TYPE 3A SIMILAR)

ALL DIMENSIONS ARE IN MILLIMETERS UNLESS OTHERWISE SHOWN

SAN FRANCISCO OAKLAND BAY BRIDGE
EAST SPAN SEISMIC SAFETY PROJECT
SELF-ANCHORED SUSPENSION BRIDGE
(SUPERSTRUCTURE & TOWER)

TOWER DIAPHRAGM DETAILS NO.5

R. Valizadeh/V. Toan/Y.L./W.L./F.C.
DESIGN OVERSIGHT
Roger Valizadeh / Vong Toan / Y. Liu
SIGN OFF DATE 09/07/07

	BY	CHECKED
DESIGN	M. Nader	M. Gulyas
DETAILS	L. Rus	M. Gulyas
QUANTITIES	L. Rus	Y. Zhang

PREPARED FOR THE STATE OF CALIFORNIA DEPARTMENT OF TRANSPORTATION

R. Manzanarez
PROJECT ENGINEER

BRIDGE NO. 34-0006L/R
KILOMETER POST 13.2/13.9

Rev. Date: 5-18-98

ORIGINAL SCALE IN MILLIMETERS FOR REDUCED PLANS 0 10 20 30 40 50 60 70 80 90 100

CU 04
EA 0120F1

DISREGARD PRINTS BEARING EARLIER REVISION DATES

REVISION DATES (PRELIMINARY STAGE ONLY) 08/02/99 05/31/01 04/08/02 07/01/02 12/19/02 10/13/05 11/13/05

SHEET 163R2 OF

FILE -> I:\bb\04-012001\sas\contract plans and cco\cco\in progress\cco#42\dgn\aetdh05.dgn

100 % PS&E

DATE PLOTTED => 07 SEP 2007 TIME PLOTTED => 10:35:12

USERNAME => ptom

DIST.	COUNTY	ROUTE	KILOMETER POST TOTAL PROJECT	SHEET NO.	TOTAL SHEETS
04	SF	80	13.2/13.9	586R2	1204

REGISTERED ENGINEER - CIVIL

12-6-04

PLANS APPROVAL DATE

REGISTERED PROFESSIONAL ENGINEER Marwan N. Nader No. C 054426 Exp. 12/31/07 CIVIL STATE OF CALIFORNIA

The State of California or its officers or agents shall not be responsible for the accuracy or completeness of electronic copies of this plan sheet.

T.Y. LIN / MOFFATT & NICHOL
825 BATTERY STREET
SAN FRANCISCO, CA 94111

Caltrans now has a web site! To get to the web site, go to: http://www.dot.ca.gov

Caltrans Metric

4

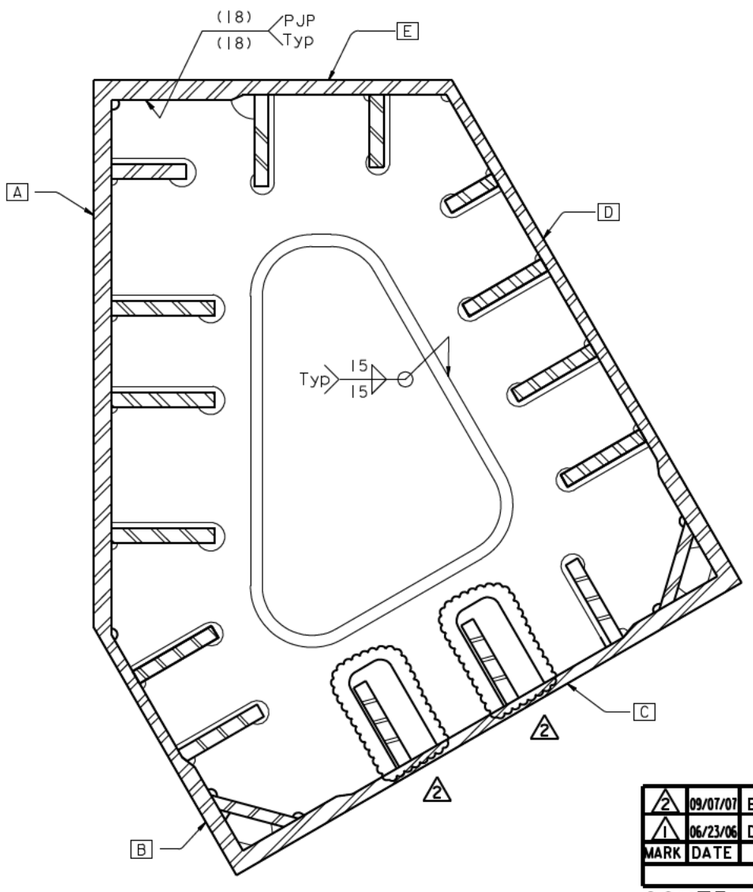

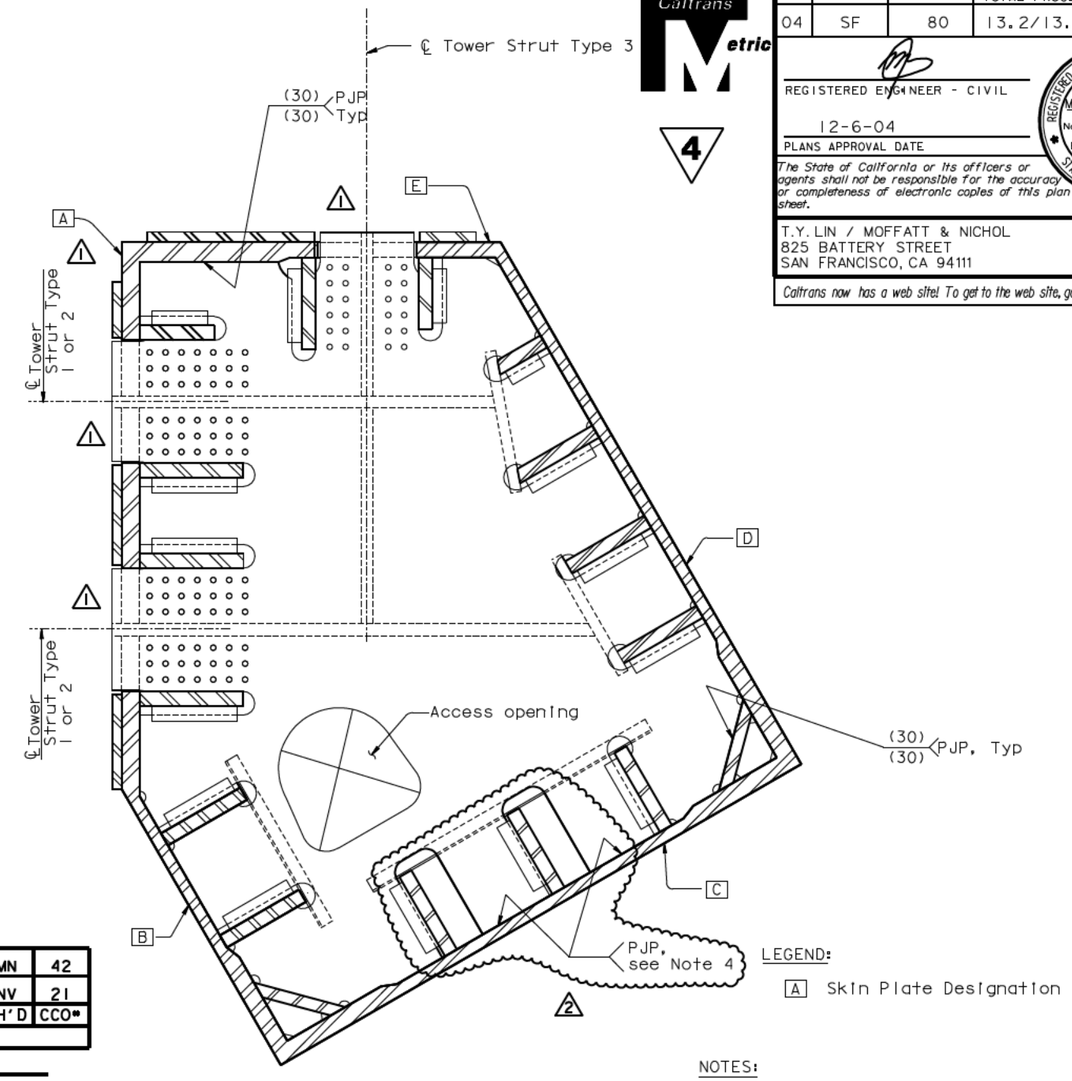

MARK	DATE	DESCRIPTIONS	BY	CH'D	CCO#
2	09/07/07	ELECTRICAL MODIFICATIONS	NV	MN	42
1	06/23/06	DELETE OVERMATCHING METAL NOTE	MN	NV	21

REVISIONS

CONTRACT CHANGE ORDER NO. _____
SHEET ____ OF ____

LEGEND:

A Skin Plate Designation

NOTES:

1. For weld size not shown, see "Tower Diaphragm Details No.6" sheet.
2. An equivalent PJP weld from one side is an acceptable alternate. (1)
3. Web plates shown in dashed lines for clarity. For details, see "Tower Diaphragm Details No.8" sheet. (1)
4. For weld size between stiffeners C1 and C2 and between C2 and C3, see "Utility Details No.2" sheet. (2)

4 REVISED PER ADDENDUM NO. 4 DATED DECEMBER 9, 2005

FOR DIAPHRAGM TYPE 1

FOR DIAPHRAGM TYPE 2 AND 3

(Diaphragm type 2 shown, diaphragm type 3 similar) 1

DIAPHRAGM TO TOWER SHAFT SKIN PLATE

WELD SIZE AND LOCATION

NTS

ALL DIMENSIONS ARE IN MILLIMETERS UNLESS OTHERWISE SHOWN

SAN FRANCISCO OAKLAND BAY BRIDGE
EAST SPAN SEISMIC SAFETY PROJECT
SELF-ANCHORED SUSPENSION BRIDGE
(SUPERSTRUCTURE & TOWER)

TOWER DIAPHRAGM DETAILS NO. 11

R. Valizadeh/V. Toan/Y.L./W.L./F.C.
DESIGN OVERSIGHT
Roger Valizadeh / Vong Toan / Y. Liu
SIGN OFF DATE 09/07/07

	BY	CHECKED
DESIGN	M. Nader	M. Gulyas
DETAILS	L. Rus	M. Gulyas
QUANTITIES	L. Rus	Y. Zhang

PREPARED FOR THE STATE OF CALIFORNIA DEPARTMENT OF TRANSPORTATION

R. Manzanarez
PROJECT ENGINEER

BRIDGE NO. 34-0006L/R
KILOMETER POST 13.2/13.9

Rev. Date: 5-18-98

ORIGINAL SCALE IN MILLIMETERS FOR REDUCED PLANS 0 10 20 30 40 50 60 70 80 90 100

CU 04
EA 0120F1

DISREGARD PRINTS BEARING EARLIER REVISION DATES

REVISION DATES (PRELIMINARY STAGE ONLY) 08/02/99 05/31/01 04/08/02 07/01/02 12/19/02 11/13/05

SHEET 169R2 OF

FILE -> I:\bb\04-012001\sas\contract plans and cco\cco\in progress\cco#42\dgn\aetdh08a.dgn

100 % PS&E

USERNAME => vignatovs DATE PLOTTED => 07 SEP 2007 TIME PLOTTED => 14:51:37

DIST.	COUNTY	ROUTE	KILOMETER POST TOTAL PROJECT	SHEET NO.	TOTAL SHEETS
04	SF	80	13.2/13.9	587R2	1204

Caltrans Metric

4

REGISTERED ENGINEER - CIVIL

12-6-04
PLANS APPROVAL DATE

REGISTERED PROFESSIONAL ENGINEER Marwan N. Nader No. C 054426 Exp. 12/31/07 CIVIL STATE OF CALIFORNIA

The State of California or its officers or agents shall not be responsible for the accuracy or completeness of electronic copies of this plan sheet.

T.Y. LIN / MOFFATT & NICHOL
825 BATTERY STREET
SAN FRANCISCO, CA 94111

Caltrans now has a web site! To get to the web site, go to: http://www.dot.ca.gov

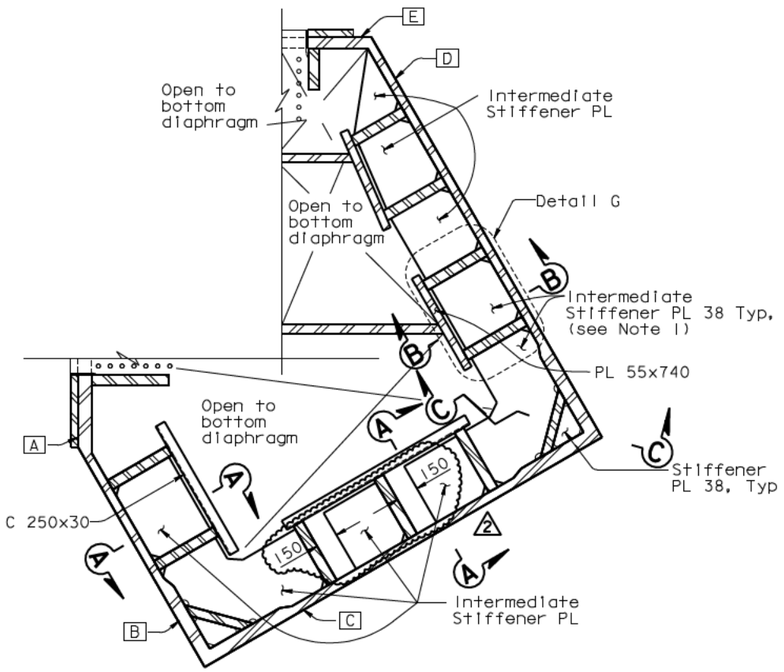

1 **INTERMEDIATE STIFFENER PLATE PLAN** (see Note 1)
1:20
(Diaphragm type 2C only, diaphragm not shown for clarity)

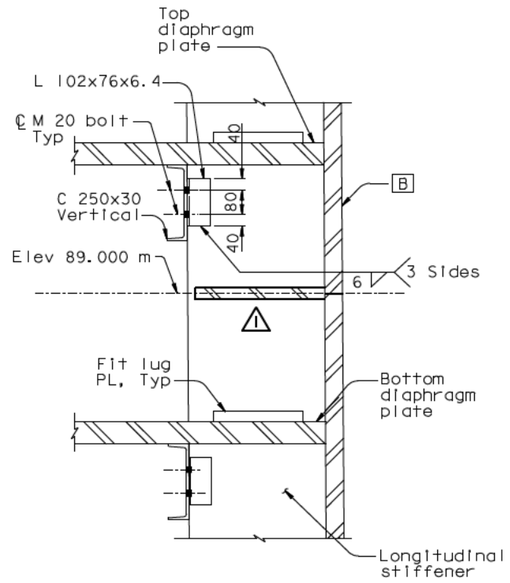

SECTION A-A (see Note 3)
1:10

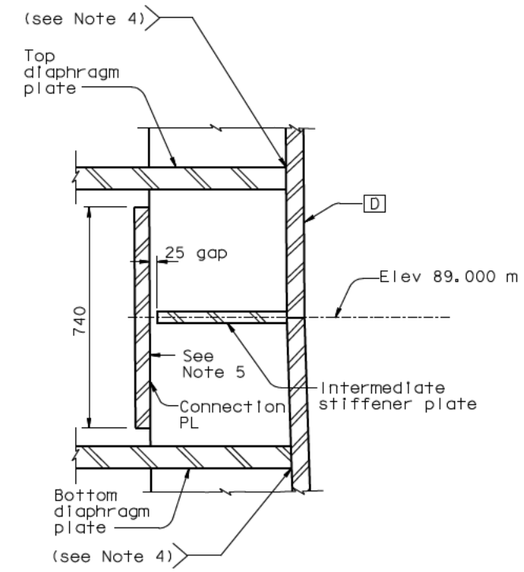

1 **SECTION B-B**
1:10

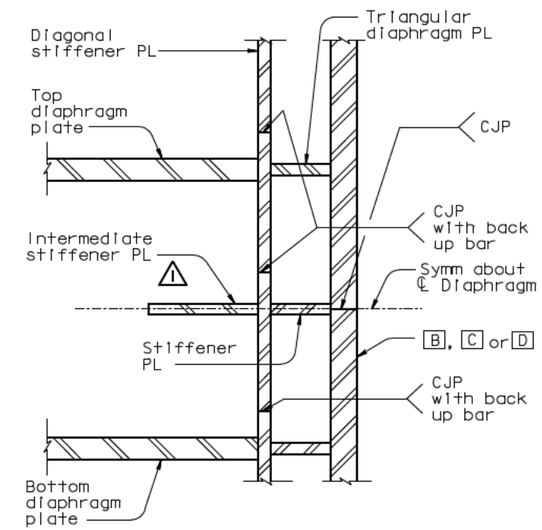

SECTION C-C
1:10

MARK	DATE	DESCRIPTIONS	BY	CH'D	CCO#
2	09/07/07	ELECTRICAL MODIFICATIONS	NV	MN	42
1	06/23/06	INTERMEDIATE STIFFENER PLATE & MISC.	MN	NV	21

REVISIONS

CONTRACT CHANGE ORDER NO. ____
SHEET ___ OF ___

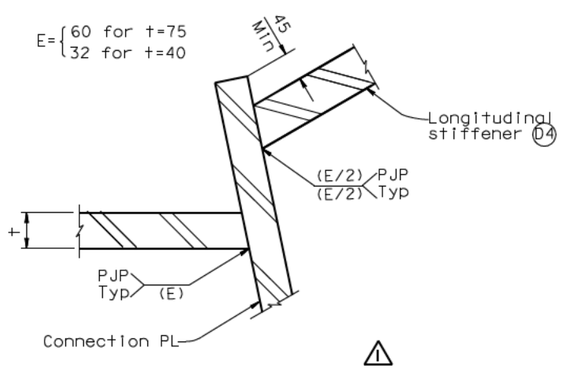

1 **DETAIL E** (Diaphragm not shown for clarity)
1:5

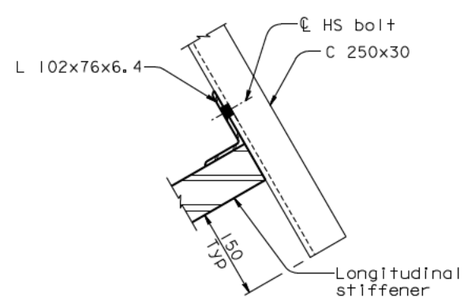

DETAIL F (Diaphragm not shown for clarity)
1:5

1

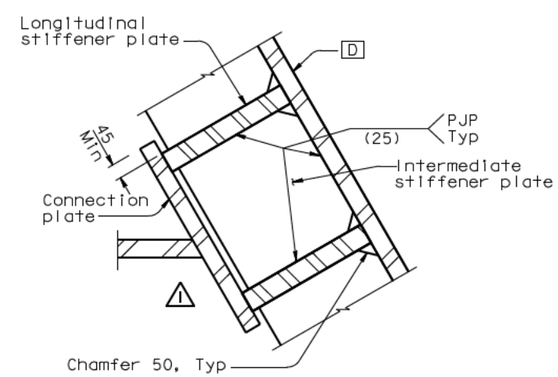

DETAIL G
1:10

NOTES:

1. Intermediate stiffener plate shall be located at elevation 89.000 m for tower skin wall C and D, and part of skin walls B.
2. For skin plate slope, see "Tower Shaft Details" sheets.
3. Details in Section A-A shall apply to similar details in all other diaphragm, unless noted otherwise.
4. The PJP and fillet welds between the diaphragm and skin plate may be made with an equivalent PJP weld from one side only. The back-up bar for CJP weld between the diaphragm and the skin plate may remain in place.
5. 1 At stiffener kink at elevation 89.000 m cut flat surface for attachment of connection plate.

4 **REVISED PER ADDENDUM NO. 4 DATED DECEMBER 9, 2005**

ALL DIMENSIONS ARE IN MILLIMETERS UNLESS OTHERWISE SHOWN

R. Valizadeh/V. Toan/Y.L./W.L./F.C.
DESIGN OVERSIGHT
Roya Valizadeh / Vong Toan / Y. Liu
SIGN OFF DATE 09/07/07

	BY	CHECKED
DESIGN	M. Nader	M. Gulyas
DETAILS	L. Rus	M. Gulyas
QUANTITIES	L. Rus	Y. Zhang

PREPARED FOR THE STATE OF CALIFORNIA DEPARTMENT OF TRANSPORTATION

R. Manzanarez
PROJECT ENGINEER

BRIDGE NO. 34-0006L/R
KILOMETER POST 13.2/13.9

SAN FRANCISCO OAKLAND BAY BRIDGE
EAST SPAN SEISMIC SAFETY PROJECT
SELF-ANCHORED SUSPENSION BRIDGE
(SUPERSTRUCTURE & TOWER)

TOWER DIAPHRAGM DETAILS NO. 12

Rev. Date: 5-18-98

ORIGINAL SCALE IN MILLIMETERS FOR REDUCED PLANS 0 10 20 30 40 50 60 70 80 90 100

CU 04
EA 0120F1

DISREGARD PRINTS BEARING EARLIER REVISION DATES

REVISION DATES (PRELIMINARY STAGE ONLY) 05/24/01 04/08/02 07/09/02 12/04/02 11/13/05

SHEET 70R2 OF

FILE -> I:\bb\04-0120f1\sas\contract plans and cco\cco\in progress\cco#42\dgn\aetdh09.dgn

100% PS&E

USERNAME => vignatovs DATE PLOTTED => 07 SEP 2007 TIME PLOTTED => 13:23:05

DIST.	COUNTY	ROUTE	KILOMETER POST TOTAL PROJECT	SHEET NO.	TOTAL SHEETS
04	SF	80	13.2/13.9	588R2	1204

REGISTERED ENGINEER - CIVIL

12-6-04
PLANS APPROVAL DATE

REGISTERED PROFESSIONAL ENGINEER
Marwan N. Nader
No. C 054426
Exp. 12/31/07
CIVIL
STATE OF CALIFORNIA

The State of California or its officers or agents shall not be responsible for the accuracy or completeness of electronic copies of this plan sheet.

T.Y. LIN / MOFFATT & NICHOL
825 BATTERY STREET
SAN FRANCISCO, CA 94111

Caltrans now has a web site! To get to the web site, go to: http://www.dot.ca.gov

Caltrans Metric

4

MARK	DATE	DESCRIPTIONS	BY	CH'D	CCO#
2	09/07/07	ELECTRICAL MODIFICATIONS	NV	MN	42
1	06/23/06	LIMITS OF PJP WELD	MN	NV	21

REVISIONS

CONTRACT CHANGE ORDER NO. ____
SHEET ____ OF ____

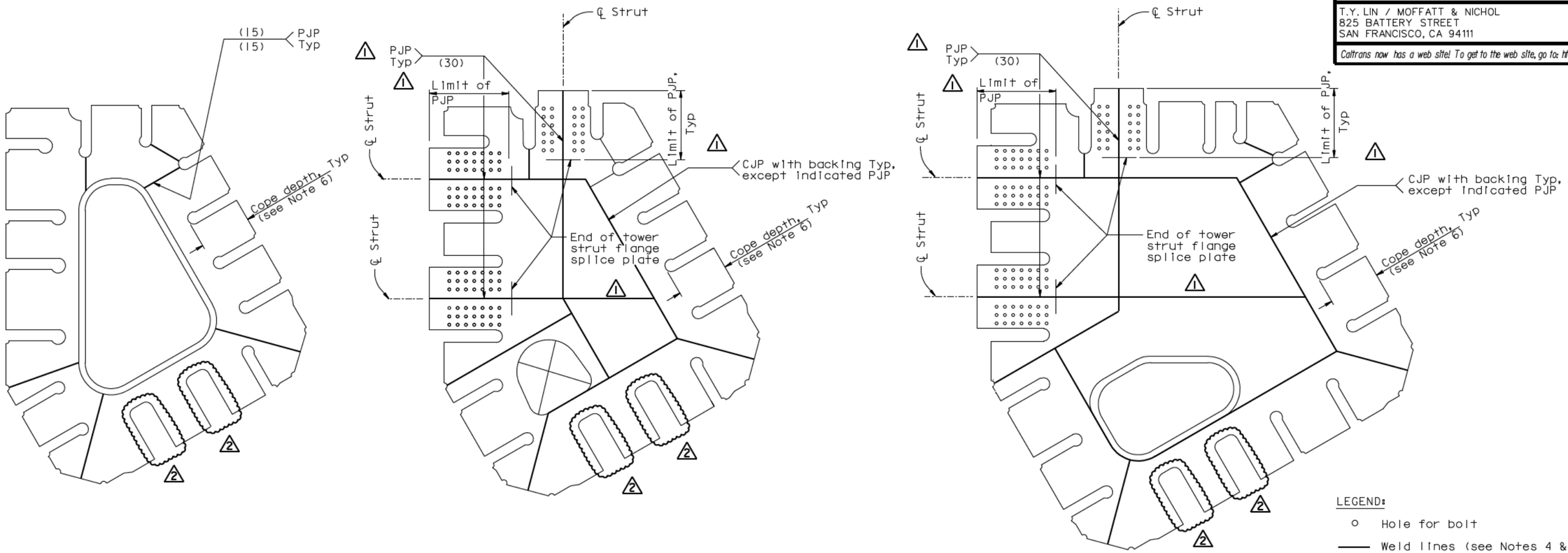

TYPE 1

TYPE 2

TYPE 3

LEGEND:

o Hole for bolt

—— Weld lines (see Notes 4 & 5)

NOTES:

1. For tower strut type 1 details, see "Tower Strut Details No.3" sheet.
2. For tower strut type 2 details, see "Tower Strut Details No.5" sheet.
3. For tower strut type 3 details, see "Tower Strut Details No.7" sheet.
4. Weld lines consist of a single weld or two welds as required.
5. This plate assembly is for information only. The Contractor shall submit a layout consistent with his means and methods for review and approval by the Engineer.
6. Cope depth for stiffeners shall be adjusted at bolted splice location as required.

TOWER DIAPHRAGM PLATE ASSEMBLY (For information only, see Note 5)

(Access holes not shown for clarity)

4 REVISED PER ADDENDUM NO. 4 DATED DECEMBER 9, 2005

ALL DIMENSIONS ARE IN MILLIMETERS UNLESS OTHERWISE SHOWN

R. Valizadeh/V. Toan/Y.L./W.L./F.C.
DESIGN OVERSIGHT
Roger Valizadeh / Vong Toan / Y. Liu
SIGN OFF DATE 09/07/07

	BY	CHECKED
DESIGN	M. Nader	M. Gulyas
DETAILS	L. Rus	M. Gulyas
QUANTITIES	L. Rus	Y. Zhang

PREPARED FOR THE STATE OF CALIFORNIA DEPARTMENT OF TRANSPORTATION

R. Manzanarez
PROJECT ENGINEER

BRIDGE NO. 34-0006L/R
KILOMETER POST 13.2/13.9

SAN FRANCISCO OAKLAND BAY BRIDGE
EAST SPAN SEISMIC SAFETY PROJECT
SELF-ANCHORED SUSPENSION BRIDGE
(SUPERSTRUCTURE & TOWER)

TOWER DIAPHRAGM DETAILS NO. 13

Rev. Date: 5-18-98

ORIGINAL SCALE IN MILLIMETERS FOR REDUCED PLANS 0 10 20 30 40 50 60 70 80 90 100

CU 04
EA 0120F1

DISREGARD PRINTS BEARING EARLIER REVISION DATES

REVISION DATES (PRELIMINARY STAGE ONLY) 05/31/01 04/08/02 07/01/02 12/19/02 11/13/05

SHEET 171R2 OF

FILE -> I:\bb\04-012001\sas\contract plans and cco\cco\in progress\cco#42\dgn\aetdh10.dgn

100 % PS&E

USERNAME => vignotovsk DATE PLOTTED => 07 SEP 2007 TIME PLOTTED => 13:22:06

DIST.	COUNTY	ROUTE	KILOMETER POST TOTAL PROJECT	SHEET NO.	TOTAL SHEETS
04	SF	80	13.2/13.9	592R1	1204

REGISTERED ENGINEER - CIVIL

12-6-04
PLANS APPROVAL DATE

REGISTERED PROFESSIONAL ENGINEER Marwan N. Nader No. C 054426 Exp. 12/31/07 CIVIL STATE OF CALIFORNIA

The State of California or its officers or agents shall not be responsible for the accuracy or completeness of electronic copies of this plan sheet.

T.Y. LIN / MOFFATT & NICHOL
825 BATTERY STREET
SAN FRANCISCO, CA 94111

Caltrans now has a web site! To get to the web site, go to: http://www.dot.ca.gov

4 **REVISED PER ADDENDUM NO. 4 DATED DECEMBER 9, 2005**

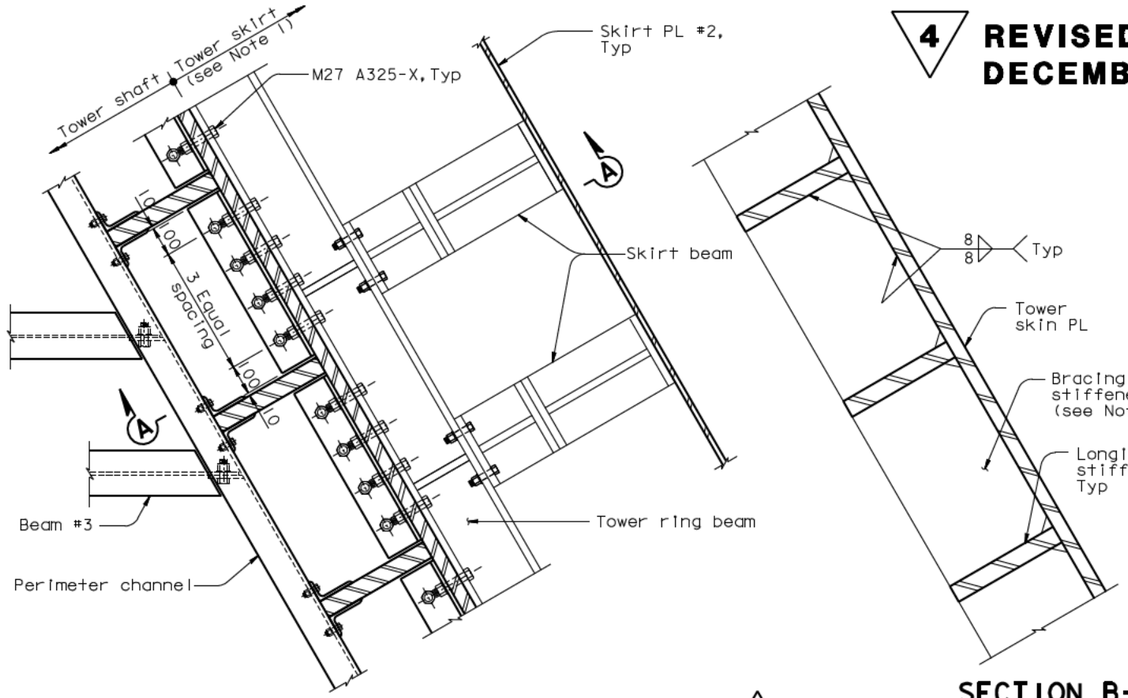

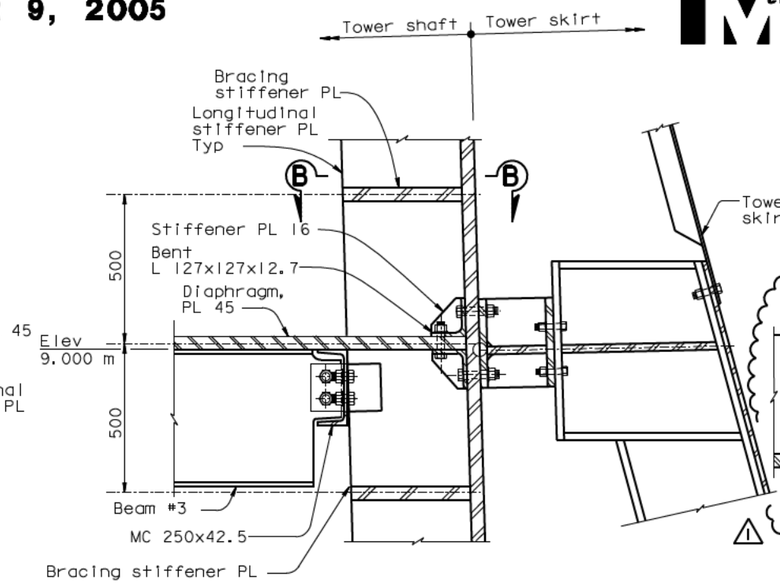

SECTION A-A (A'-A' Sim) 1
1:10

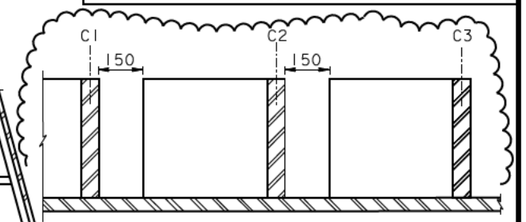

SECTION B-B (at Detail M) 1
1:10

DETAIL C' (Diaphragm plate not shown for clarity) (Detail at elevation 9.000 m only) 1
1:10

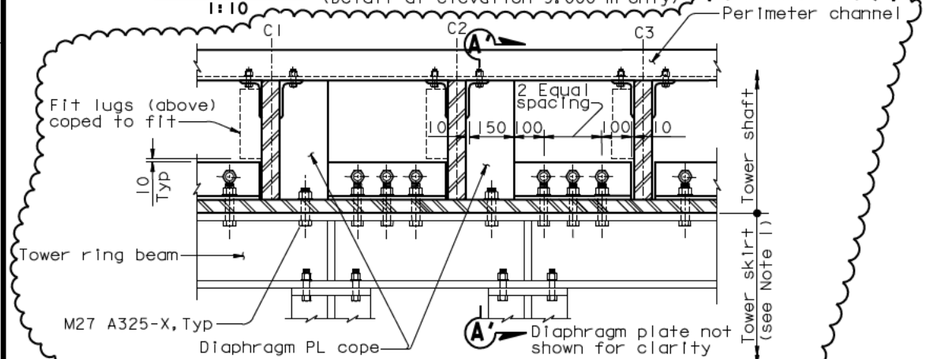

DETAIL M (Detail at elevation 9.000 m only)
1:10

SECTION B-B
1:10

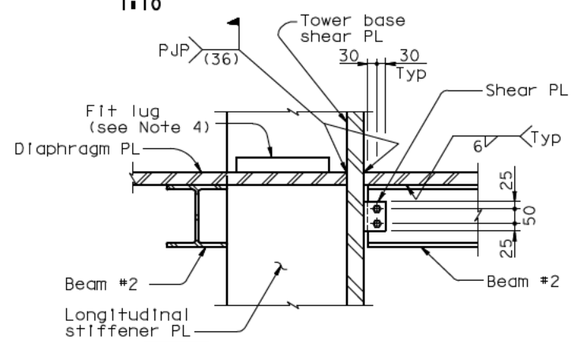

4 **SECTION H'-H'**
1:10
(Detail at elevation 9.000 m only)

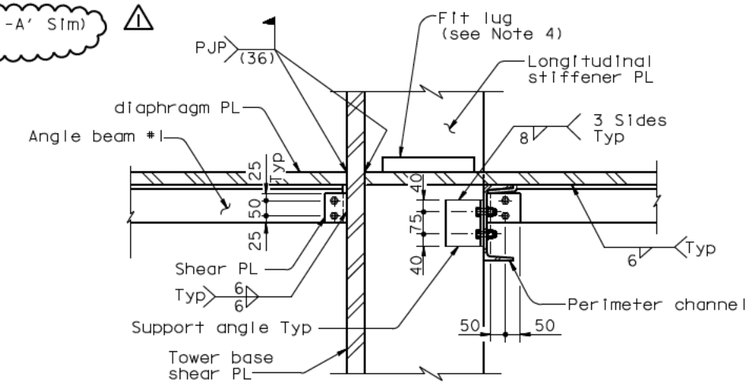

4 **SECTION E'-E'**
1:10
(Detail at elevation 9.000 m only)

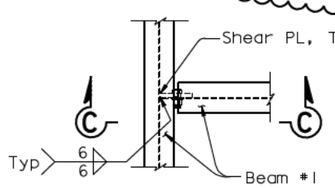

DETAIL K
1:10

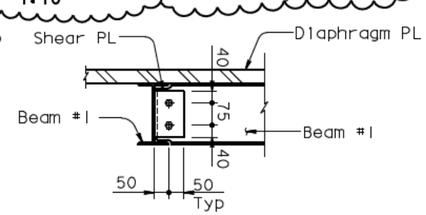

SECTION C-C
1:10

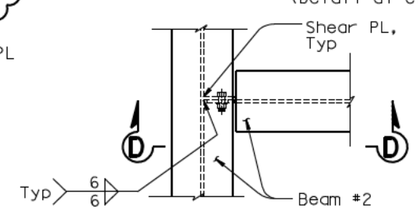

DETAIL L
1:10

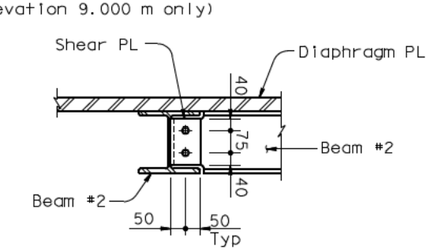

SECTION D-D
1:10

ALL DIMENSIONS ARE IN MILLIMETERS UNLESS OTHERWISE SHOWN

NOTES:

1. For tower skirt details, see "Tower Skirt Details No. 1" sheet.
2. For typical diaphragm cutout around tower longitudinal stiffeners, see "Tower Diaphragm Details No. 6" sheet.
3. Bracing stiffener plates shall be located along tower skin PL [C] and [D], and tower base shear plates [d] and [c].
4. Fit lugs for shear plates may be field welded. For fit lug details, see "Tower Diaphragm Details No. 6" sheet.

MARK	DATE	DESCRIPTIONS	BY	CH'D	CCO#
1	09/07/07	ELECTRICAL MODIFICATIONS	NV	MN	42

REVISIONS

CONTRACT CHANGE ORDER NO. ____
SHEET ___ OF ___

R. Valizadeh/V. Toan/Y.L./W.L./F.C.
DESIGN OVERSIGHT
Rezan Valizadeh / Vonn Toan / Y. Liu
SIGN OFF DATE 09/07/07

Rev. Date: 5-18-98

DESIGN	BY M. Nader	CHECKED M. Gulyas	
DETAILS	BY L. Rus	CHECKED M. Gulyas	
QUANTITIES	BY L. Rus	CHECKED Y. Zhang	

PREPARED FOR THE STATE OF CALIFORNIA DEPARTMENT OF TRANSPORTATION

R. Manzanarez
PROJECT ENGINEER

CU 04
EA 0120F1

BRIDGE NO. 34-0006L/R
KILOMETER POST 13.2/13.9

ORIGINAL SCALE IN MILLIMETERS FOR REDUCED PLANS 0 10 20 30 40 50 60 70 80 90 100

DISREGARD PRINTS BEARING EARLIER REVISION DATES 05/24/01 04/26/02 07/24/02 12/14/02 11/13/05

SAN FRANCISCO OAKLAND BAY BRIDGE
EAST SPAN SEISMIC SAFETY PROJECT
SELF-ANCHORED SUSPENSION BRIDGE
(SUPERSTRUCTURE & TOWER)

TOWER DIAPHRAGM DETAILS NO. 17

SHEET 175R1 OF

FILE -> I:\bb\04-012001\sas\contract plans and cco\cco\in progress\cco#42\dgn\detdh14.dgn

100% PS&E
DATE PLOTTED => 07 SEP 2007 TIME PLOTTED => 10:39:19
USERNAME => ptom

DIST.	COUNTY	ROUTE	KILOMETER POST TOTAL PROJECT	SHEET NO.	TOTAL SHEETS
04	SF	80	13.2/13.9	966R3	1204

REGISTERED ENGINEER - CIVIL

1-27-03
PLANS APPROVAL DATE

REGISTERED PROFESSIONAL ENGINEER Marwan N. Nader No. C 054426 Exp. 12/31/09 CIVIL STATE OF CALIFORNIA

The State of California or its officers or agents shall not be responsible for the accuracy or completeness of electronic copies of this plan sheet.

T.Y. LIN / MOFFATT & NICHOL
825 BATTERY STREET
SAN FRANCISCO, CA 94111

To get to the web site, go to: http://www.dot.ca.gov

Caltrans Metric

PLATE AND WELD THICKNESS TABLE

DIAPHRAGM	A (mm)	B (mm)	N (mm)
TYPE 1	35	30	18*
TYPES 2 & 3	45	40	35

* PJP not modified for Type 1 diaphragms

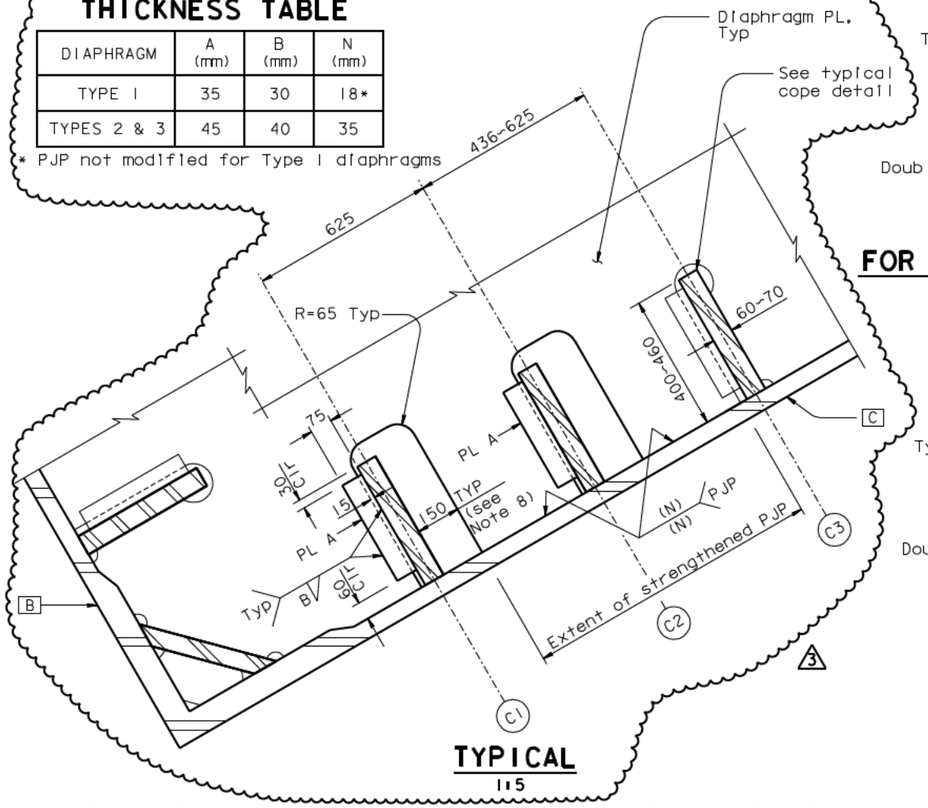

TYPICAL
1:5

DIAPHRAGM COPE DETAIL FOR UTILITY CONDUITS

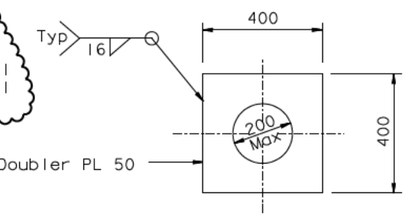

FOR DEHUMIDIFICATION CONDUITS (see Note 3)
1:10

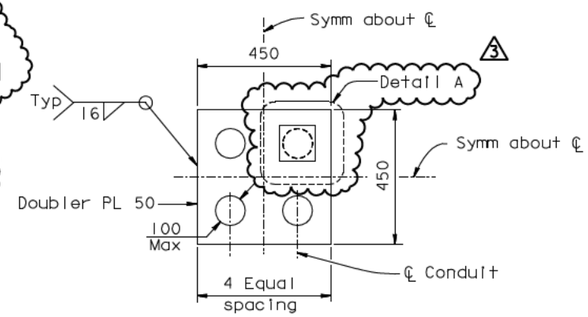

FOR ELECTRIC CONDUITS (see Note 1)
1:10

HOLE STIFFENING DETAIL FOR UTILITY CONDUITS

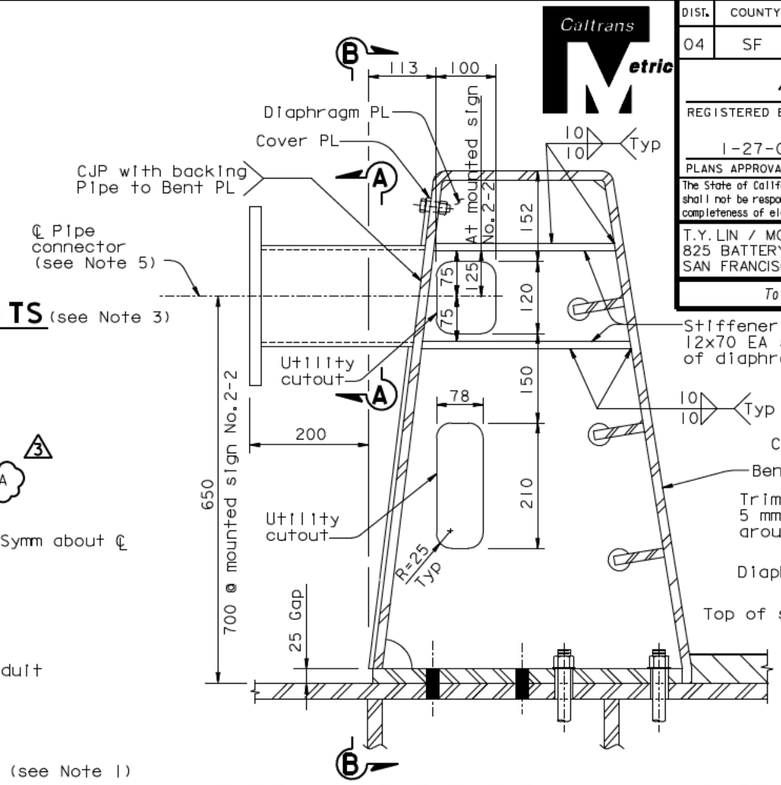

PIPE CONNECTOR FOR SIGN ON BARRIER
1:5

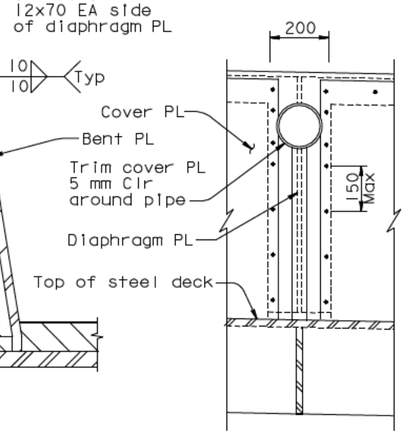

SECTION B-B
1:10

LEGEND:

(C1) Tower longitudinal stiffener designation (see Note 4)

NOTES:

1. Drill holes (100 Dia Max) as required up to 4 maximum. Seal around conduits with silicone caulk with backing rods.
2. For utility layout and details, see "Road Plans".
3. Drill hole and seal to conduits as required for dehumidification conduits. For other duct penetrations, see similar "Duct Opening Detail" on "Dehumidification Support Details No.5" sheet.
4. For tower longitudinal stiffener locations, see "Tower Shaft Details" sheets.
5. Pipe connector must line up with barrier diaphragm. Sign location shall be moved to the nearest diaphragm. See "Barrier Details" sheets for barrier details. See Road Plans for sign details.
6. For each Doubler PL the Contractor shall provide four penetrations of the doubler and tower skin plates. For conduits installed under this contract the Contractor shall determine a hole size suitable to the installed conduit. The remaining penetrations shall be 100 mm diameter and shall be sealed. See Detail A. 3
7. For mounting screw and openings in mounting PL see "Road Plans."
8. Dimension shall be 170 at Elev 80.75, 85.25, 111.67 and 117.33.
9. For conduit and box support details, see "Road Plans".

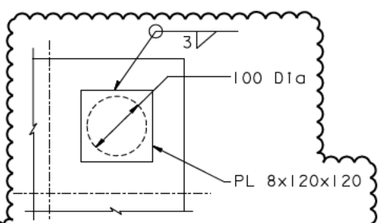

DETAIL A
SPARE PENETRATIONS SEALING DETAIL
(As required, see Note 6)
1:2.5

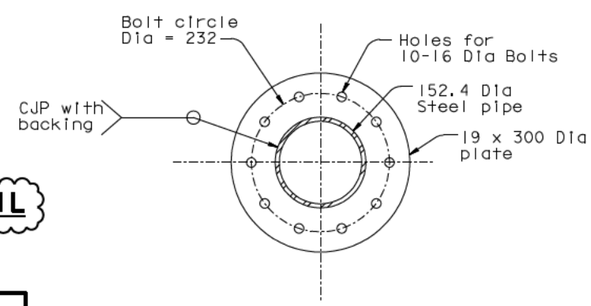

SECTION A-A
1:5

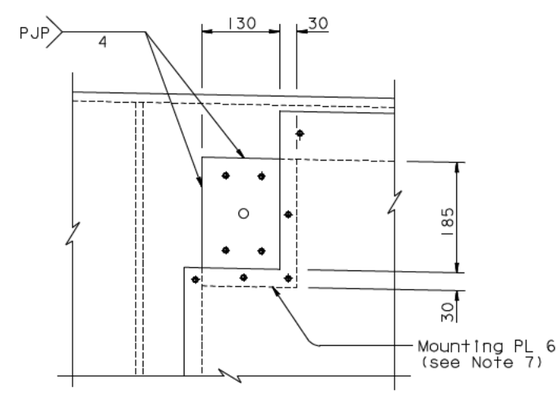

RECEPTACLE MOUNTING
1:5

3

ALL DIMENSIONS ARE IN MILLIMETERS UNLESS OTHERWISE SHOWN

REQUESTS FOR INFORMATION NOT ADDRESSED IN THIS CCO REMAIN IN FORCE

MARK	DATE	DESCRIPTIONS	BY	CH'D	CCO#
3	04/25/08	ELECTRICAL MODIFICATIONS	AS	MN	42
2	04/18/08	BARRIER MODIFICATIONS	AS	MN	44
1	08/24/07	BARRIER MODIFICATIONS	GB	MN	44

REVISIONS

CONTRACT CHANGE ORDER NO. ____
SHEET ___ OF ___

R. Vallizadeh/V. Toan/Y.L./W.L./F.C.
DESIGN OVERSIGHT
SIGN OFF DATE 04/25/08

	BY	CHECKED
DESIGN	M. Nader	T. Ho
DETAILS	L. Rus	T. Ho
QUANTITIES	L. Rus	D. Harrison

PREPARED FOR THE STATE OF CALIFORNIA DEPARTMENT OF TRANSPORTATION

R. Manzanarez
PROJECT ENGINEER

BRIDGE NO. 34-0006L/R
KILOMETER POST 13.2/13.9

SAN FRANCISCO OAKLAND BAY BRIDGE
EAST SPAN SEISMIC SAFETY PROJECT
SELF-ANCHORED SUSPENSION BRIDGE
(SUPERSTRUCTURE & TOWER)

UTILITY DETAILS NO. 2

Rev. Date: 5-18-98

ORIGINAL SCALE IN MILLIMETERS FOR REDUCED PLANS 0 10 20 30 40 50 60 70 80 90 100

CU 04
EA 0120F1

DISREGARD PRINTS BEARING EARLIER REVISION DATES

REVISION DATES (PRELIMINARY STAGE ONLY) 04/08/02 07/01/02 12/19/02 11/13/05

SHEET 549R3 OF

FILE -> L:\BB\04-012001\SAS\Contract Plans and CCO\CCO\In Progress\CCO#42\Update 04-25-08\DGN\akmsc14.dgn

100% PS&E

USERNAME => vlgnatovsk DATE PLOTTED => 25 APR 2008 TIME=5:14:02 PM

CONTRACT CHANGE ORDER

Change Requested by: Engineer

CCO: 42 **Suppl. No. 1** **Contract No. 04 – 0120F4** **Road** SF-80-13.2/13.9 **FED. AID LOC.:**

To: **AMERICAN BRIDGE/FLUOR ENTERPRISES INC A JOINT VENTURE**

You are directed to make the following changes from the plans and specifications or do the following described work not included in the plans and specifications for this contract. ***NOTE: This change order is not effective until approved by the Engineer.***

Description of work to be done, estimate of quantities and prices to be paid. (Segregate between additional work at contract price, agreed price and force account.) Unless otherwise stated, rates for rental of equipment cover only such time as equipment is actually used and no allowance will be made for idle time. This last percentage shown is the net accumulated increase or decrease from the original quantity in the Engineer's Estimate.

Adjustment of Compensation at Lump Sum Price:

ITEM 1.

Revise the Special Provisions Section 10-3.08 " SUPPORT HARDWARE FOR CONDUITS, CABLE TRAYS AND WIREWAYS STAINLESS STEEL POWER-STUD ANCHOR-THREADED VERSION", as shown on sheet 3 of this change order.

Incorporate into the work the Cable Tray Changes shown on sheets 4 through 109 of this change order.

The following revised contract plan sheets and added supplemental plan sheets detail all changes: 77R1, 80R1, 81R1, 84R1, 85R1, 86R1, 86S1, 86S2, 86S3, 86S4, 86S5, 86S6, 86S7, 86S8, 86S9, 86S10, 86S11, 86S12, 86S13, 86S14, 86S15, 86S16, 93R2, 103R1, 103S1, 103S2, 103S3, 103S4, 103S5, 103S6, 104R1, 104S1, 104S2, 104S3, 104S4, 104S5, 104S6, 106R1, 140R1, 149R2, 154R2, 155R1, 174R1, 174S1, 175R1, 176R1, 176S1, 176S2, 176S3, 177R1, 178R1, 178S1, 178S2, 178S3, 179R1, 180R1, 181R1, 181S1, 183R1, 184R1, 187R1, 215R2, 216R1, 220R1, 221R1, 230R1, 230S1, 231R1, 232R1, 232S1, 232S2, 232S3, 232S4, 233R2, 234R1, 235R1, 235S1, 235S2, 235S3, 236R1, 237R1, 237S1, 239R1, 240R1, 243R1, 271R2, 357S1, 357S2, 357S3, 357S4, 361R3, 362R2, 363R2, 363S1, 364R2, 373R2, 374R2, 375R2, 376R2, 376S1, 407R2, 452R1, 452S1, 631S1, 706R1 and 964R1 (of 1204).

This change order resolves the costs associated with Contractor Request For Information (RFI) Nos. 375, 460R0, 460R1, 584R0, 584R1, 675, 790R0, 790R1, 793, 811R0, 811R1, 814, 845, 857R0, 857R1, 861, 919R0, 919R1, 1338R0, 1338R1, and 1439 with respect to changes listed above.

Adjustment of Compensation at Lump Sum $250,000.00

ITEM 2.

The items identified above in this change order have been paid as part of CCO 108S1 resolution. Therefore, the amount due under this change order will be adjusted by the amount paid under CCO 108S1 to prevent a double payment. Total amount paid under CCO 108S1, and to be credited to this change, is $250,000.00.

Adjustment of Compensation at Lump Sum .....<$250,000.00>

CHANGE ORDER COST AND TIME SUMMARY

(ITEM 1) Adjustment of Compensation for work pursuant to this change order	$250,000.00
(ITEM 2) Amount paid under CCO 108S1 for this change order	<$250,000.00>
Total net pay for this change order	$0.00

Contract time is not addressed in CCO 108S1 for work identified in this change order. Therefore, consideration of a time adjustment will be deferred. Determination of a commensurate time adjustment will be made in accordance with Section 10-1.13, "PROGRESS SCHEDULE (CRITICAL PATH METHOD)" and Section 10-1.14, "TIME-RELATED OVERHEAD" of the Special Provisions, as well as Section 8-1.07, "LIQUIDATED DAMAGES", of the Standard Specifications.

CONTRACT CHANGE ORDER

Change Requested by: Engineer

CCO: 42 **Suppl. No. 1** **Contract No. 04 – 0120F4** **Road** SF-80-13.2/13.9 **FED. AID LOC.:**

Estimated Cost: Increase ☐ Decrease ☐ $0

By reason of this order the time of completion will be adjusted as follows: **Deferred**

Submitted by

Signature	**Resident Engineer** William Shedd, Senior T.E.	**Date** 7-15-10

Approval Recommended by

Signature	**Supervising Bridge Engineer** Brian Boal, Sup. T.E.	**Date** 7/15/10

Engineer Approval by

Signature	~~**Principal**~~ **Transportation Engineer** for Gary Pursell, Sup. T.E.	**Date** 8/9/10

We the undersigned contractor, have given careful consideration to the change proposed and agree, if this proposal is approved, that we will provide all equipment, furnish the materials, except as otherwise be noted above, and perform all services necessary for the work above specified, and will accept as full payment therefor the prices shown above.

NOTE: If you, the contractor, do not sign acceptance of this order, your attention is directed to the requirements of the specifications as to proceeding with the ordered work and filing a written protest within the time therein specified.

Contractor Acceptance by

Signature	(Print name and title) Michael D. Flowers Project Director	**Date** 8-5-10

STATE OF CALIFORNIA
DEPARTMENT OF TRANSPORTATION

HC-5 (Rev. 5/93)

CONTRACT CHANGE ORDER NO. 42 SUPPL. NO. 1

ROAD 04-SF-80-13.2, 13.9 SHEET 3 OF 109 SHEETS
FEDERAL NO.(S) CONTRACT NO.: 04-0120F4

Special Provisions changes:

1. In the Special Provisions, Section 10-3.08 " SUPPORT HARDWARE FOR CONDUITS, CABLE TRAYS AND WIREWAYS STAINLESS STEEL POWER-STUD ANCHOR-THREADED VERSION", Subsection "CABLE TRAY LADDER TYPE" is revised as follows:

   CABLE TRAY LADDER TYPE
   Cable tray systems are defined to include, but are not limited to straight sections of ladder type cable trays, bends, tees, elbows, dropouts, supports and accessories or as shown on plans.

2. In the Special Provisions, Section 10-3.08 " SUPPORT HARDWARE FOR CONDUITS, CABLE TRAYS AND WIREWAYS STAINLESS STEEL POWER-STUD ANCHOR-THREADED VERSION", Subsection "CABLE TRAY LADDER TYPE", Subsection "Cable Tray Sections and Components" is revised as follows:

   Cable Tray Sections and Components
   Straight section and fitting side rails and rungs shall be made of ASTM Designation: A 570 and A 611 steel. The cable tray system shall be hot-dip galvanized after fabrication in conformance with the requirements in ASTM Designation: A 123. The cable tray side rails shall be stamped with the manufacturer's name, part number and material type. Transverse members (rungs) or corrugated bottoms shall be welded to the side rails with steel welding wire.
   Ladder type trays shall consist of two longitudinal members (side rails) with transverse members (rungs) welded to the side rails. Rungs shall be spaced 229 mm on center. Rung spacing in fittings shall be 229 mm and measured at the center of the tray's width. Rungs shall have a minimum cable-bearing surface radius edge of 25 mm. Each rung must be capable of supporting 91 kg concentrated load above the cable load at the center of the cable tray with a safety factor of 1.5. Tray sizes shall have 127-mm minimum usable load depth or as noted on the plans.
   Straight tray sections shall have side rails fabricated as ~~I-beams~~ C-Channels or as authorized by the Engineer. Tray widths shall be as shown on plans. Tray fittings shall include all reducers, and vertical and horizontal bends. All fittings must have a minimum radius of 610 mm. Splice plates shall be the bolted type made as indicated below for each tray type. The resistance of fixed splice connections between an adjacent section of tray shall not exceed 330 $\mu\Omega$. Splice plate construction shall be such that a splice may be located anywhere within the support span without diminishing rated loading capacity of the cable tray. (The splice plate shall be able to support the full load of the tray). Splice plates shall be manufactured of high strength steel. All hardware shall be stainless steel. Cable tray shall be supported at intervals of not more than 4.74 m. All conduit terminating at trays shall provide a continuous cable route by using bushings specifically suited for attaching conduit to the tray rail and for providing ground continuity.
   Cable trays shall meet NEMA Class Designations 16B. The cable trays shall be manufactured by B-Line Systems, Chalfant, or other approved manufacturer.

REGISTERED PROFESSIONAL ENGINEER
FADI WALIEDDINE
No. 11465
Exp. 12-31-09
ELECTRICAL
STATE OF CALIFORNIA

STATE OF CALIFORNIA - DEPARTMENT OF TRANSPORTATION

CONTRACT CHANGE ORDER MEMORANDUM

TO: Pete Siegenthaler, Prin TE /	FILE: E.A. 04 - 0120F4
FROM: Gary Pursell, Sup. TE	CO-RTE-PM SF-80-13.2/13.9
	FED. NO.
CCO#: 42 SUPPLEMENT#: 1 Category Code: CBSA	CONTINGENCY BALANCE (incl. this change) $138,518,462.40
COST: $0.00 INCREASE ☐ DECREASE ☐	HEADQUARTERS APPROVAL REQUIRED? ☐ YES ☑ NO
SUPPLEMENTAL FUNDS PROVIDED: $0.00	IS THIS REQUEST IN ACCORDANCE WITH ENVIRONMENTAL DOCUMENTS? ☑ YES ☐ NO
CCO DESCRIPTION: Cable Tray Changes	**PROJECT DESCRIPTION:** CONSTRUCT SELF-ANCHORED SUSPENSION BRIDGE

Original Contract Time:	Time Adj. This Change:	Previously Approved CCO Time Adjustments:	Percentage Time Adjusted: (including this change)	Total # of Unreconciled Deferred Time CCO(s): (including this change)
2490 Day(s)	0 Day(s)	- 30 Day(s)	1 %	2

THIS CHANGE ORDER PROVIDES FOR:

Incorporating revisions to Cable Trays as identified in the responses to Contractor's Request For Information (RFI) numbers 375, 460R0, 460R1, 584R0, 584R1, 675, 790R0, 790R1, 793, 811R0, 811R1, 814, 845, 857R0, 857R1, 861, 919R0, 919R1, 1338R0, 1338R1, and 1439.

These revisions include, but are not limited to the following changes:
- Replace portions of cable trays with flexible metal conduits at Piers W2W and W2E.
- Modify cable tray supports, configurations, and locations at W2 Pier Cap, Catwalks, and Orthotropic Box Girder (OBG).
- Correct the location of bolt hole conflicts in the rib stiffners so that cable tray supports can be attached.
- Use cable trays in lieu of conduits running through slot in longitudinal shear plate at PP14.

The reasons for these changes include constructibility issues with the cable trays requiring different types of support, changes in location, and different tray sizes. Relocating cable trays and supports will ease construction and prevent potential interference. Cable trays that are located near the expansion joints had portions replaced with flexible conduits to provide offset and expansion flexibility during a seismic event.

Since the cost, of $250,000.00 in this change, is included in Contract Change Order 108 Supplement 1 (CCO 108S1) Claim Settlement Report No. 1 resolution costs the net payment in this change order is zero.

Contract time is not addressed in CCO 108 for work identified in this change order. Therefore, consideration of a time adjustment will be deferred until completion of the work specified herein. Determination of a commensurate time adjustment will be made in accordance with Section 10-1.13, "PROGRESS SCHEDULE (CRITICAL PATH METHOD)" and Section 10-1.14, "TIME-RELATED OVERHEAD" of the Special Provisions, as well as Section 8-1.07, "LIQUIDATED DAMAGES", of the Standard Specifications.

This change order received concurrence from Gary Pursell (Resident Engineer), Rick Morrow (Sup. Structure Rep), Mike Forner (Principal TE), Rich Foley (HQ Oversight), Ken Terpstra (Project Manager), Richard Land (Chief Engineer), Jon Tapping (HQ Coordinator), Tony Anziano (Toll Bridge Program Manager), Brian Maroney (Project Engineer), Wenyi Long (Design Oversight), and Lina Ellis (Structure Maintenance).

Claims Settlement Report (CSR) No. 1, for this project, revises the authority to "Issue and Approve" the changes listed in CCO 108S1 Appendices A & B. The authority to "Issue and Approve" the changes listed in Appendices A & B for the values of time and money contemplated therein has been delegated to the District for approval, therefore approval of this change order by the Headquarters CCO Desk will not be required. Since this change order is included in CCO 108S1 no Headquarters CCO Desk "Issue and Approve" is required, a copy of CCO 108S1 is attached for reference

ADA Notice: For individuals with sensory disabilities, this document is available in alternate formats. For information call: (916) 654-6410 or TDD (916) 654-3880 or write Records and Forms Management, 1120 N Street, MS-89, Sacramento, CA 95814

CONCURRED BY:			
Construction Engineer:	Res. Eng., Gary Pursell, Sup. TE	Date	12/4/07
Bridge Engineer:	Struct Rep, Rick Morrow, Sup TE	Date	12/4/07
Project Engineer:	CT Oversight, Wenyi Long, P.E.	Date	5/23/08
Project Manager:	Proj Manager, Ken Terpstra	Date	6/2/08
FHWA Rep.:	HQ, Rob Kobal	Date	12/7/07
Environmental:	SMI Tollbridges, Lina Ellis	Date	5/28/08
Other (specify):	PCE, Mike Forner, Prin TE	Date	12/6/07
Other (specify):	Toll Bridge Design, Jing Chen	Date	5/27/08
District Prior Approval By:		Date	
HQ (Issue Approve) By:		Date	
Resident Engineer's Signature:	Gary Pursell	Date	6/29/10

ESTIMATE OF COST

	THIS REQUEST	TOTAL TO DATE
ITEMS	$0.00	$0.00
FORCE ACCOUNT	$0.00	$0.00
AGREED PRICE	$0.00	$0.00
ADJUSTMENT	$0.00	$0.00
TOTAL	$0.00	$0.00

FEDERAL PARTICIPATION

☐ PARTICIPATING ☐ PARTICIPATING IN PART ☑ NONE
☐ NON-PARTICIPATING (MAINTENANCE) ☐ NON-PARTICIPATING

FEDERAL SEGREGATION (if more than one Funding Source or P.I.P. type)
☑ CCO FUNDED PER CONTRACT ☐ CCO FUNDED AS FOLLOWS

FEDERAL FUNDING SOURCE	PERCENT

ADA Notice: For individuals with sensory disabilities, this document is available in alternate formats. For information call: (916) 654-6410 or TDD (916) 654-3880 or write Records and Forms Management, 1120 N Street, MS-89, Sacramento, CA 95814.

MARK	DATE	DESCRIPTIONS	BY	CH'D	CCO#
1	01/09/08	CABLE TRAY CHANGES	GB	DT	42S1

REVISIONS

CONTRACT CHANGE ORDER NO. ____
SHEET ___ OF ___

FOR REVISIONS ONLY

Daniel J. Turner
REGISTERED PROFESSIONAL ENGINEER
Daniel J. Turner
No. C 65033
Exp. 06/30/09
CIVIL
STATE OF CALIFORNIA

Caltrans Metric

DIST.	COUNTY	ROUTE	KILOMETER POST TOTAL PROJECT	SHEET NO.	TOTAL SHEETS
04	SF	80	13.2/13.9	706R1	1204

George Baker
REGISTERED ENGINEER - CIVIL
12-6-04
PLANS APPROVAL DATE

REGISTERED PROFESSIONAL ENGINEER
George S. Baker
No. C 57112
Exp. 12/31/05
CIVIL
STATE OF CALIFORNIA

The State of California or its officers or agents shall not be responsible for the accuracy or completeness of electronic copies of this plan sheet.

T.Y. LIN / MOFFATT & NICHOL
825 BATTERY STREET
SAN FRANCISCO, CA 94111

Caltrans now has a web site! To get to the web site, go to: http://www.dot.ca.gov

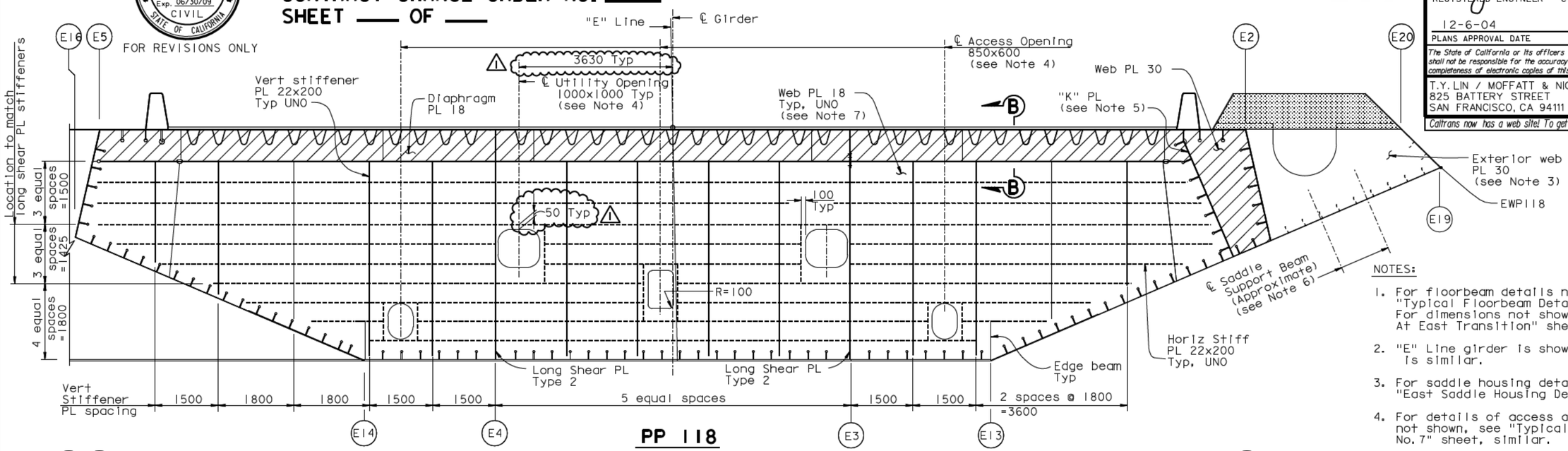

PP 118

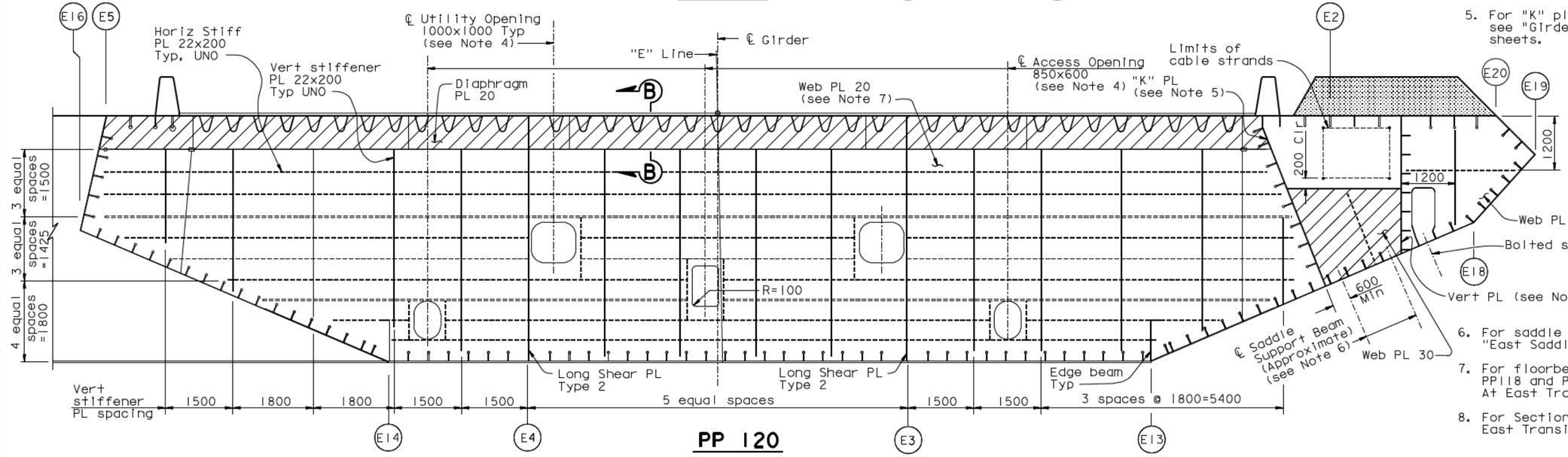

PP 120

"E" LINE SECTION (see Note 2)

1:50

NOTES:

1. For floorbeam details not shown, see "Typical Floorbeam Details No.1" sheet. For dimensions not shown, see "Girder At East Transition" sheets.
2. "E" Line girder is shown, "W" Line girder is similar.
3. For saddle housing details, see "East Saddle Housing Details" sheets.
4. For details of access and utility opening not shown, see "Typical Girder Details No.7" sheet, similar.
5. For "K" plate and vertical plate details, see "Girder At East Transition Details" sheets.
6. For saddle support beams details, see "East Saddle Details No.7" sheet.
7. For floorbeam web plate details at PP118 and PP120, see "Floorbeam At East Transition Details No.2" sheet.
8. For Section B-B, see "Floorbeam At East Transition Details No.1" sheet.

LEGEND:

Saddle Housing (see Note 3)

"Indicates SPCM web plate"

ALL DIMENSIONS ARE IN MILLIMETERS UNLESS OTHERWISE SHOWN

R. Valizadeh/V. Toan/Y.L./W.L./F.C.
DESIGN OVERSIGHT
SIGN OFF DATE 01/09/08

	BY	CHECKED
DESIGN	G. Baker	P. Ritchie
DETAILS	S. Camo	T. McMeans
QUANTITIES	C. Mauch	M. Roberts

PREPARED FOR THE STATE OF CALIFORNIA DEPARTMENT OF TRANSPORTATION

R. Manzanarez
PROJECT ENGINEER

BRIDGE NO. 34-0006L/R
KILOMETER POST 13.2/13.9

SAN FRANCISCO OAKLAND BAY BRIDGE
EAST SPAN SEISMIC SAFETY PROJECT
SELF-ANCHORED SUSPENSION BRIDGE (SUPERSTRUCTURE & TOWER)

FLOORBEAM AT EAST TRANSITION NO.2

Rev. Date: 5-18-98

ORIGINAL SCALE IN MILLIMETERS FOR REDUCED PLANS 0 10 20 30 40 50 60 70 80 90 100

CU 04
EA 0120F1

DISREGARD PRINTS BEARING EARLIER REVISION DATES

REVISION DATES (PRELIMINARY STAGE ONLY) 01/15/99 05/15/99 08/02/99 05/31/01 04/08/02 07/09/02 12/19/02

SHEET 289R1 OF

FILE -> I:\bb\04-0120F1\sas\contract plans and cco\cco\in progress\cco#42s1\dgn\agefd02.dgn

USERNAME => pfram DATE PLOTTED => 09 JAN 2008 TIME PLOTTED => 09:36:20

100 % PS&E

DIST	COUNTY	ROUTE	KILOMETER POST TOTAL PROJECT	SHEET No	TOTAL SHEETS
04	SF	80	13.2/13.9	77R1	1204

REGISTERED CIVIL ENGINEER 12/19/02 DATE

12-6-04
PLANS APPROVAL DATE

REGISTERED PROFESSIONAL ENGINEER Mee Shing Owyong No. 24960 Exp. 12/31/05 CIVIL STATE OF CALIFORNIA

The State of California or its officers or agents shall not be responsible for the accuracy or completeness of electronic copies of this plan sheet.

Parsons Brinckerhoff Quade & Douglas, Inc.
303 Second Street, Suite 700N
San Francisco, CA 94107

Caltrans now has a web site! To get to the web site, go to: http://www.dot.ca.gov

Caltrans Metric

NOTES:

1. The Contractor shall verify all controlling dimensions before ordering or fabricating any material.
2. All structural steel shall be AASHTO M270M Grade 36.
3. All welded connections shall conform to the requirements of AASHTO/AWS D1.5 Bridge Welding Code. Weld electrodes shall be E70XX.
4. All structural steel shall be hot-dipped galvanized.
5. See electrical plans for locations. Adjust locations to clear the stiffeners in bridge girder as needed.
6. To accommodate roadway slopes, support height may be adjusted by shimming to maintain the same horizontal elevation of cable tray when more than one support is required.
7. Detail is typical for Westbound and Eastbound
8. For cable tray installation and layout, see sheets E-126, E-126A, E-212 and E-212A. except as noted.

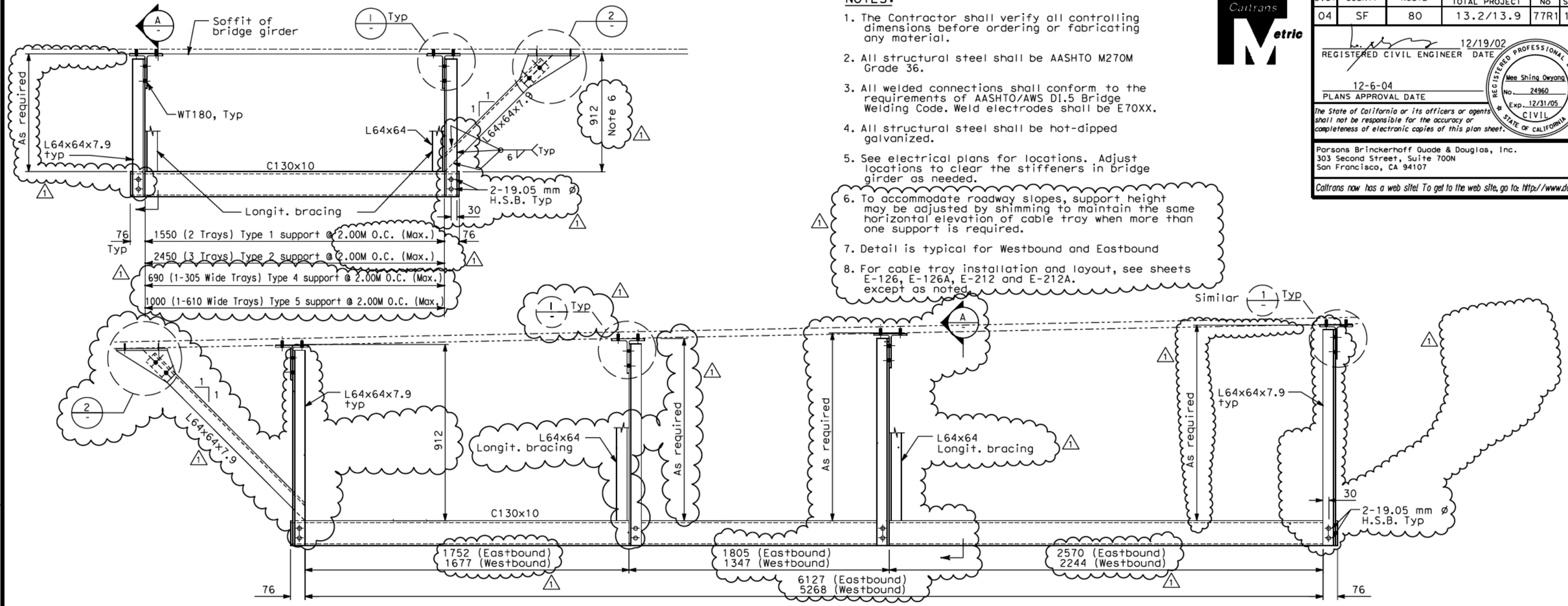

TYPICAL CABLE TRAY SUPPORT BELOW BRIDGE GIRDER (TYPE 3)

SCALE: 1:10

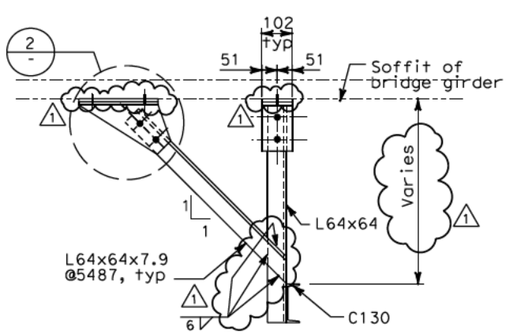

LONGITUDINAL BRACING

SECTION A
SCALE: 1:10

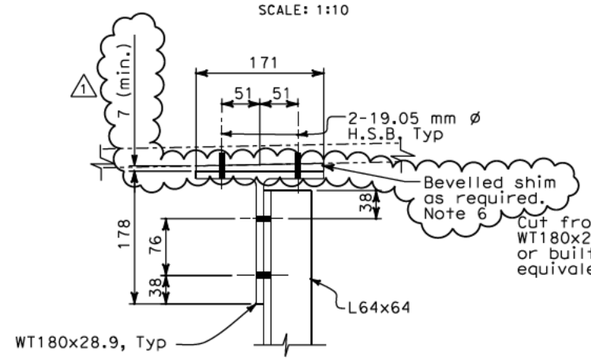

DETAIL 1
SCALE: 1:4

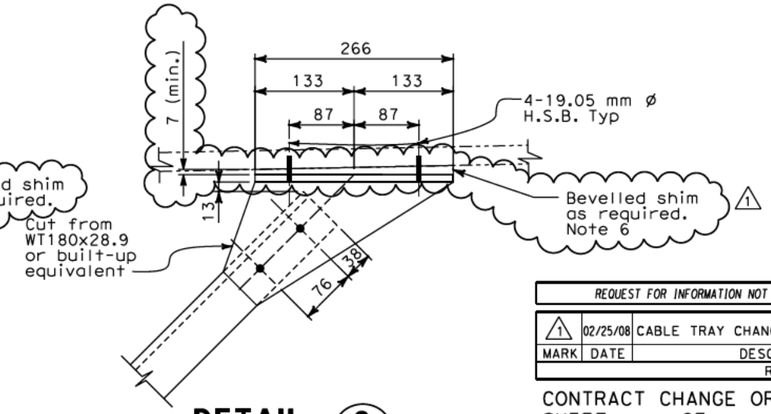

DETAIL 2
SCALE: 1:4

REGISTERED PROFESSIONAL ENGINEER Mee Shing Owyong No. 24960 Exp. 12/31/09 CIVIL STATE OF CALIFORNIA

FOR REVISION ONLY

REQUEST FOR INFORMATION NOT ADDRESSED IN THIS CCO REMAIN IN FORCE					
1	02/25/08	CABLE TRAY CHANGES	RG	MSO	42S1
MARK	DATE	DESCRIPTIONS	BY	CH'D	CCO#
		REVISIONS			

CONTRACT CHANGE ORDER NO._____
SHEET _____ OF _____

ALL DIMENSIONS ARE IN MILLIMETERS UNLESS OTHERWISE SHOWN

Bob Zandipour
DESIGN OVERSIGHT
4/4/04
SIGN OFF DATE

	BY	CHECKED
DESIGN	I. Horton	M. S. Owyang
DETAILS	D. Chin	M. S. Owyang
QUANTITIES	M. S. Owyang	L. Johnson

PREPARED FOR THE STATE OF CALIFORNIA DEPARTMENT OF TRANSPORTATION

Gene Lusherovich
PROJECT ENGINEER

BRIDGE NO. 34-0006
KILOMETER POST 13.2/13.9

SAS SUPERSTRUCTURE

MISCELLANEOUS SECTIONS AND DETAILS SHEET 2 OF 2

AS-7

DESIGN DETAIL SHEET (METRIC) (REV. 3/1/98)

ORIGINAL SCALE IN MILLIMETERS FOR REDUCED PLANS 0 10 20 30 40 50 60 70 80 90 100

DISREGARD PRINTS BEARING EARLIER REVISION DATES

REVISION DATES (PRELIMINARY STAGE ONLY)

SHEET 7 OF 16

CU 04251
EA 0120F1

FILE => T:\13103\MS\pse\SAS Struc\CCO\SAS CCO42S1\CCO 42S1 Final Submittal 2008-07-11\04-0120f1_0077R01.dgn

USERNAME => garcior DATE PLOTTED => 8/28/2008 TIME PLOTTED => 3:13:11 PM

$FREQUEST

DIST	COUNTY	ROUTE	KILOMETER POST TOTAL PROJECT	SHEET No	TOTAL SHEETS
04	SF	80	13.2/13.9	80R1	1204

REGISTERED CIVIL ENGINEER 4/2/04

12-6-04
PLANS APPROVAL DATE

REGISTERED PROFESSIONAL ENGINEER Mee Shing Owyang No. 24960 Exp. 12/31/07 CIVIL STATE OF CALIFORNIA

The State of California or its officers or agents shall not be responsible for the accuracy or completeness of electronic copies of this plan sheet.

Parsons Brinckerhoff Quade & Douglas, Inc.
303 Second Street, Suite 700N
San Francisco, CA 94107

Caltrans now has a web site! To get to the web site, go to: http://www.dot.ca.gov

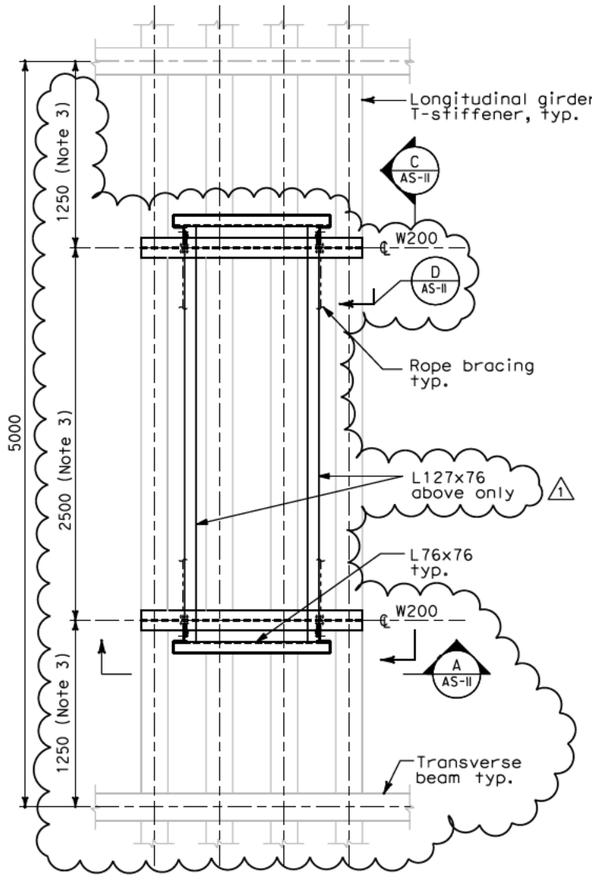

AT T-STIFFENERS

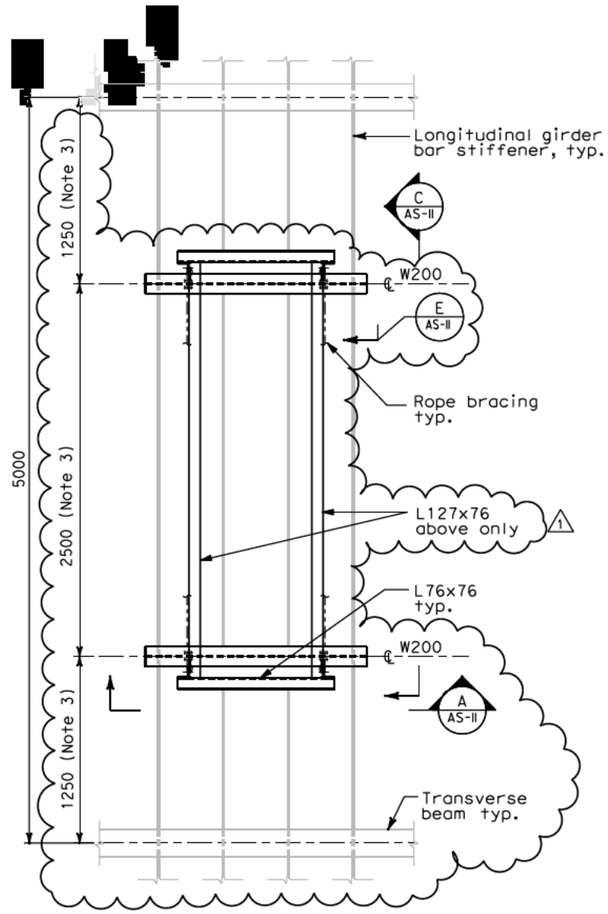

AT BAR-STIFFENERS

CABLE TRAY SUPPORT PLAN (TYPE I AND II) 1

SCALE 1:20

NOTES:

1. The contractor shall verify all controlling field dimensions before ordering or fabricating any material.
2. For structural notes, see sheet AS-1.
3. For cable tray support locations, see electrical plans and dwgs AS-16K 1 through AS-16R. 1
4. For longitudinal girder stiffener sizes and locations, see SAS superstructure plan.

REGISTERED PROFESSIONAL ENGINEER Mee Shing Owyang No. 24960 Exp. 12/31/09 CIVIL STATE OF CALIFORNIA

FOR REVISION ONLY

REQUEST FOR INFORMATION NOT ADDRESSED IN THIS CCO REMAIN IN FORCE

MARK	DATE	DESCRIPTIONS	BY	CH'D	CCO#
1	02/25/08	CABLE TRAY CHANGES	RG	MSO	42S1

REVISIONS

CONTRACT CHANGE ORDER NO. _____
SHEET _____ OF _____

ALL DIMENSIONS ARE IN MILLIMETERS UNLESS OTHERWISE SHOWN

Bob Zandipour
DESIGN OVERSIGHT

SIGN OFF DATE

	BY	CHECKED
DESIGN	M. S. Owyang	R. Howell
DETAILS	D. Chin	M. S. Owyang
QUANTITIES	I. Horton	P. McNamee

PREPARED FOR THE STATE OF CALIFORNIA DEPARTMENT OF TRANSPORTATION

Gene Lusherovich
PROJECT ENGINEER

BRIDGE NO. 34-0006
KILOMETER POST 13.2/13.9

SAS SUPERSTRUCTURE
CABLE TRAY SUPPORT PLAN

AS-10

SHEET 10 OF 16

DESIGN DETAIL SHEET (METRIC) (REV. 3/1/98)

ORIGINAL SCALE IN MILLIMETERS FOR REDUCED PLANS 0 10 20 30 40 50 60 70 80 90 100

CU 04251
EA 0120F1

DISREGARD PRINTS BEARING EARLIER REVISION DATES

REVISION DATES (PRELIMINARY STAGE ONLY)

FILE => T:\13103\MS\pse\SAS Struc\CCO\SAS CCO42S1\CCO 42S1 Final Submittal 2008-07-11\04-0120f1_0080R01.dgn

$FREQUEST

USERNAME => garcior DATE PLOTTED => 8/28/2008 TIME PLOTTED => 3:15:36 PM

DIST	COUNTY	ROUTE	KILOMETER POST TOTAL PROJECT	SHEET No	TOTAL SHEETS
04	SF	80	13.2/13.9	81R1	1204

REGISTERED CIVIL ENGINEER 4/2/04 DATE

12-6-04
PLANS APPROVAL DATE

REGISTERED PROFESSIONAL ENGINEER Mee Shing Owyong No. 24960 Exp. 12/31/05 CIVIL STATE OF CALIFORNIA

The State of California or its officers or agents shall not be responsible for the accuracy or completeness of electronic copies of this plan sheet.

Parsons Brinckerhoff Quade & Douglas, Inc.
303 Second Street, Suite 700N
San Francisco, CA 94107

Caltrans now has a web site! To get to the web site, go to: http://www.dot.ca.gov

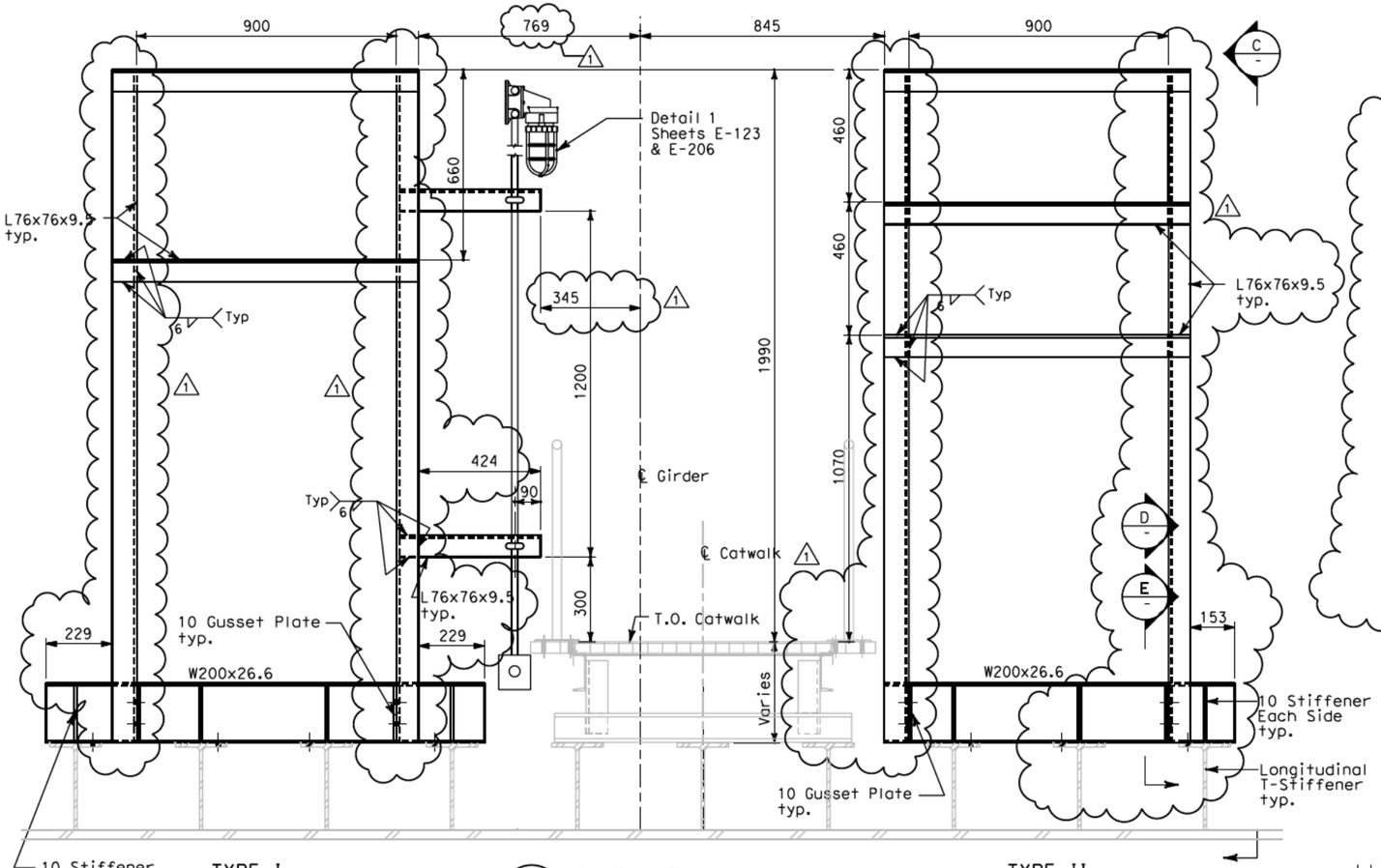

A SECTION (AS-10)
SCALE: 1:10

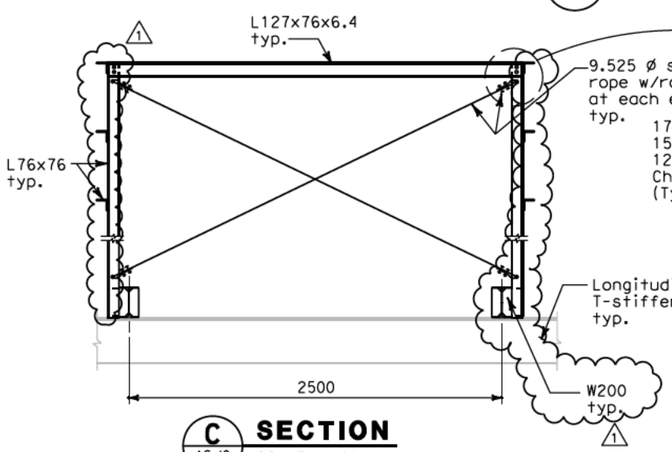

C SECTION (AS-10)
SCALE: 1:20

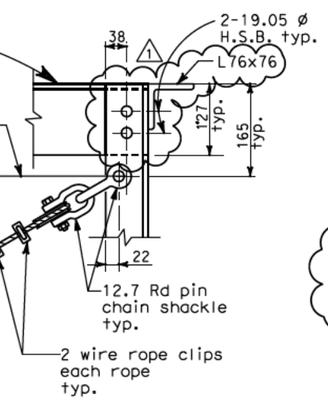

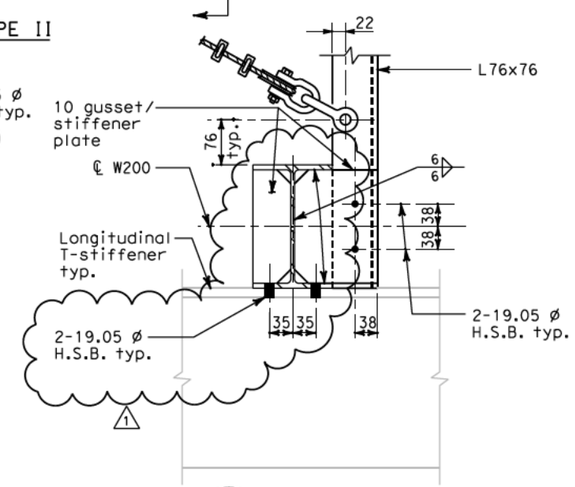

D SECTION (AS-10)
SCALE: 1:5
(T-Stiffener)

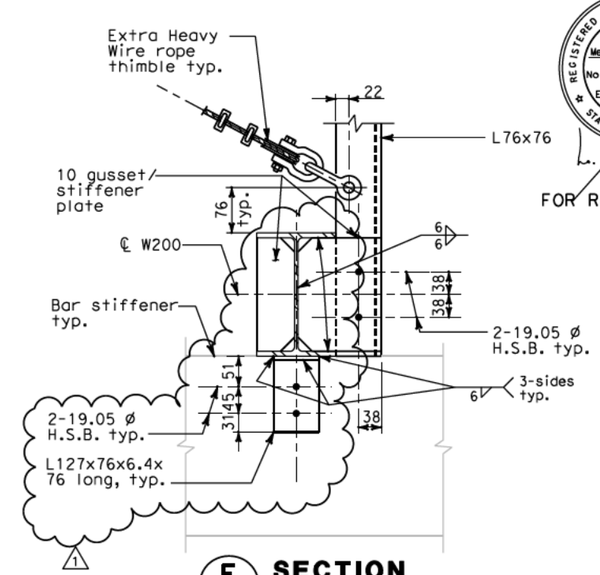

E SECTION (AS-10)
SCALE: 1:5
(Bar Stiffener)

NOTES:

1. The contractor shall verify all controlling field dimensions before ordering or fabricating any material.
2. For structural notes, see sheet AS-1.
3. For cable tray support locations, see electrical plans and dwgs AS-16K through AS-16R.

REQUEST FOR INFORMATION NOT ADDRESSED IN THIS CCO REMAIN IN FORCE					
1	02/25/08	CABLE TRAY CHANGES	RG	MSO	42S1
MARK	DATE	DESCRIPTIONS	BY	CH'D	CCO#
		REVISIONS			

CONTRACT CHANGE ORDER NO._____
SHEET_____ OF _____

REGISTERED PROFESSIONAL ENGINEER Mee Shing Owyong No. 24960 Exp. 12/31/09 CIVIL STATE OF CALIFORNIA

FOR REVISION ONLY

ALL DIMENSIONS ARE IN
MILLIMETERS UNLESS OTHERWISE SHOWN

Bob Zandipour
DESIGN OVERSIGHT

SIGN OFF DATE

	BY	CHECKED
DESIGN	I. Horton	M. S. Owyang
DETAILS	D. Chin	M. S. Owyang
QUANTITIES	I. Horton	P. McNamee

PREPARED FOR THE
STATE OF CALIFORNIA
DEPARTMENT OF TRANSPORTATION

Gene Lusherovich
PROJECT ENGINEER

BRIDGE NO. 34-0006
KILOMETER POST 13.2/13.9

SAS SUPERSTRUCTURE
CABLE TRAY SUPPORT DETAIL

AS-11

SHEET 11 OF 16

DESIGN DETAIL SHEET (METRIC) (REV. 3/1/98)

ORIGINAL SCALE IN MILLIMETERS FOR REDUCED PLANS 0 10 20 30 40 50 60 70 80 90 100

CU 04251
EA 0120F1

DISREGARD PRINTS BEARING EARLIER REVISION DATES

REVISION DATES (PRELIMINARY STAGE ONLY)

FILE => T:\13103\MS\pse\SAS Struc\CCO\SAS CCO42S1\CCO 42S1 Final Submittal 2008-07-11\04-0120f1_0081R01.dgn

USERNAME => gorcior DATE PLOTTED => 8/28/2008 TIME PLOTTED => 3:18:05 PM

#FREQUEST

DIST	COUNTY	ROUTE	KILOMETER POST TOTAL PROJECT	SHEET No	TOTAL SHEETS
04	SF	80	13.2/13.9	84R1	1204

REGISTERED CIVIL ENGINEER 4/2/04 DATE

12-6-04
PLANS APPROVAL DATE

REGISTERED PROFESSIONAL ENGINEER Mee Shing Owyang No. 24960 Exp. 12/31/05 CIVIL STATE OF CALIFORNIA

The State of California or its officers or agents shall not be responsible for the accuracy or completeness of electronic copies of this plan sheet.

Parsons Brinckerhoff Quade & Douglas, Inc.
303 Second Street, Suite 700N
San Francisco, CA 94107

Caltrans now has a web site! To get to the web site, go to: http://www.dot.ca.gov

REQUEST FOR INFORMATION NOT ADDRESSED IN THIS CCO REMAIN IN FORCE

MARK	DATE	DESCRIPTIONS	BY	CH'D	CCO#
1	02/25/08	CABLE TRAY CHANGES	RG	MSO	42S1

REVISIONS

CONTRACT CHANGE ORDER NO._____
SHEET _____ OF _____

REGISTERED PROFESSIONAL ENGINEER Mee Shing Owyang No. 24960 Exp. 12/31/09 CIVIL STATE OF CALIFORNIA

FOR REVISION ONLY

NOTES:

1. The contractor shall verify all controlling field dimensions before ordering or fabricating any material.
2. For structural notes, see sheet AS-1.
3. For cable tray support locations, see electrical plans and dwgs AS-16K through AS-16R.
4. For details not shown, see sheet AS-11.
5. For cable tray installation and layout, see sheets E124A, E-124B, E-207A, E-207B and E-207C.
6. Type V W200 are mounted on 3 longitudinal stiffeners at PP41 and on 2 longitudinal stiffeners at PP14, PP32, PP50, PP80 and PP110.

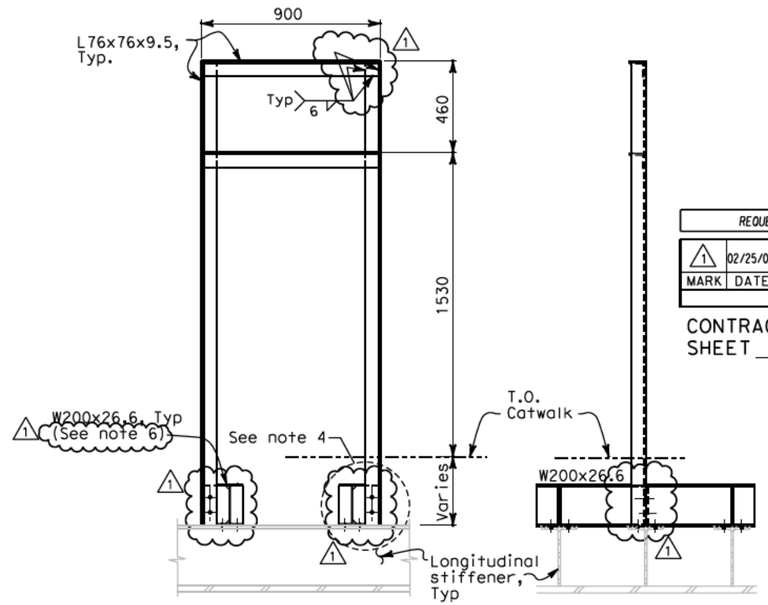

FRONT VIEW SIDE VIEW

TYPE V
SCALE: 1:15

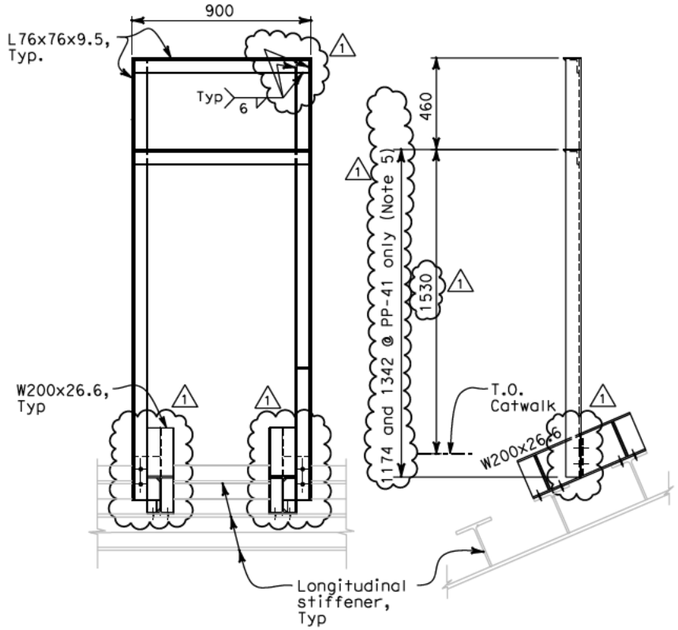

FRONT VIEW SIDE VIEW

TYPE VI
SCALE: 1:15

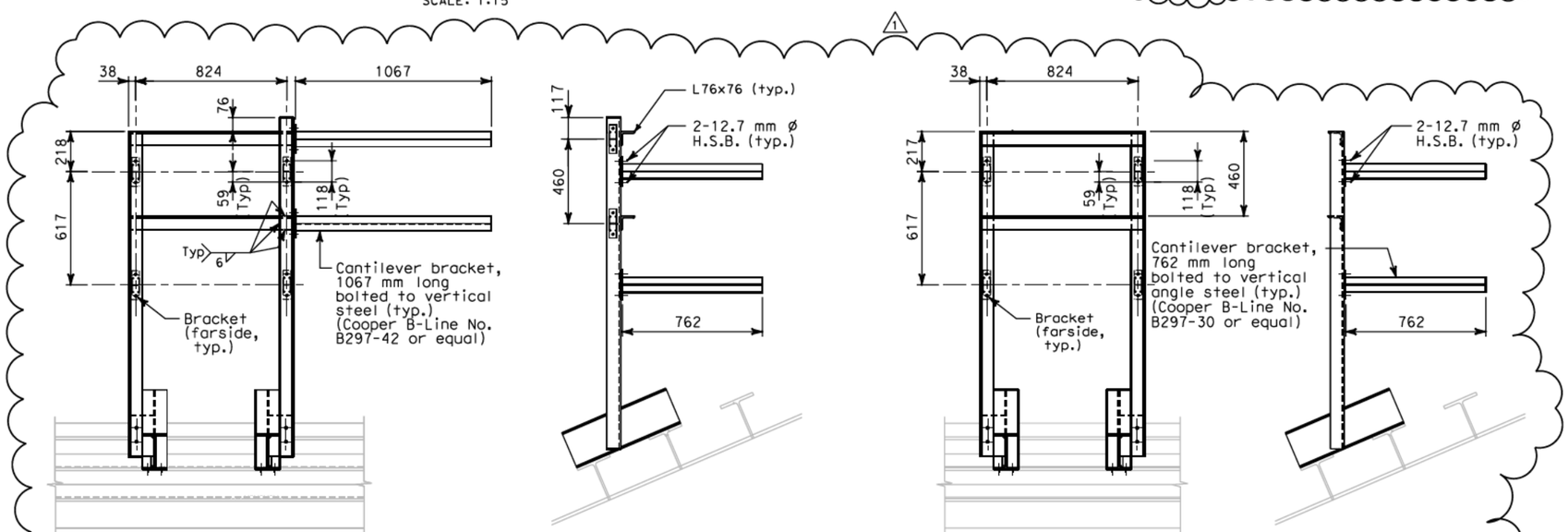

FRONT VIEW SIDE VIEW

TYPE VI (MODIFIED)
PP 14 ONLY
SCALE: 1:15

FRONT VIEW SIDE VIEW

TYPE VI
PP 32, PP 50, PP 80 AND PP 110
SCALE: 1:15

ALL DIMENSIONS ARE IN MILLIMETERS UNLESS OTHERWISE SHOWN

Bob Zandipour
DESIGN OVERSIGHT

SIGN OFF DATE

	BY	CHECKED
DESIGN	I. Horton	M. S. Owyang
DETAILS	D. Chin	M. S. Owyang
QUANTITIES	I. Horton	P. McNamee

PREPARED FOR THE STATE OF CALIFORNIA DEPARTMENT OF TRANSPORTATION

Gene Lusherovich
PROJECT ENGINEER

BRIDGE NO. 34-0006
KILOMETER POST 13.2/13.9

SAS SUPERSTRUCTURE
CABLE TRAY SUPPORT DETAIL

AS-14

SHEET 14 OF 16

DESIGN DETAIL SHEET (METRIC) (REV. 3/1/98)

ORIGINAL SCALE IN MILLIMETERS FOR REDUCED PLANS 0 10 20 30 40 50 60 70 80 90 100

CU 04251
EA 0120F1

DISREGARD PRINTS BEARING EARLIER REVISION DATES

REVISION DATES (PRELIMINARY STAGE ONLY)

FILE => T:\13103\MS\pse\SAS Struc\CCO\SAS CCO42S1\CCO 42S1 Final Submittal 2008-07-11\04-0120f1_0084R01.dgn

USERNAME => garcior DATE PLOTTED => 8/28/2008 TIME PLOTTED => 3:20:14 PM

#FREQUEST

DIST	COUNTY	ROUTE	KILOMETER POST TOTAL PROJECT	SHEET No	TOTAL SHEETS
04	SF	80	13.2/13.9	85R1	1204

REGISTERED CIVIL ENGINEER 4/2/04 DATE

12-6-04
PLANS APPROVAL DATE

REGISTERED PROFESSIONAL ENGINEER Mee Shing Owyang No. 24960 Exp. 12/31/07 CIVIL STATE OF CALIFORNIA

The State of California or its officers or agents shall not be responsible for the accuracy or completeness of electronic copies of this plan sheet.

Parsons Brinckerhoff Quade & Douglas, Inc.
303 Second Street, Suite 700N
San Francisco, CA 94107

Caltrans now has a web site! To get to the web site, go to: http://www.dot.ca.gov

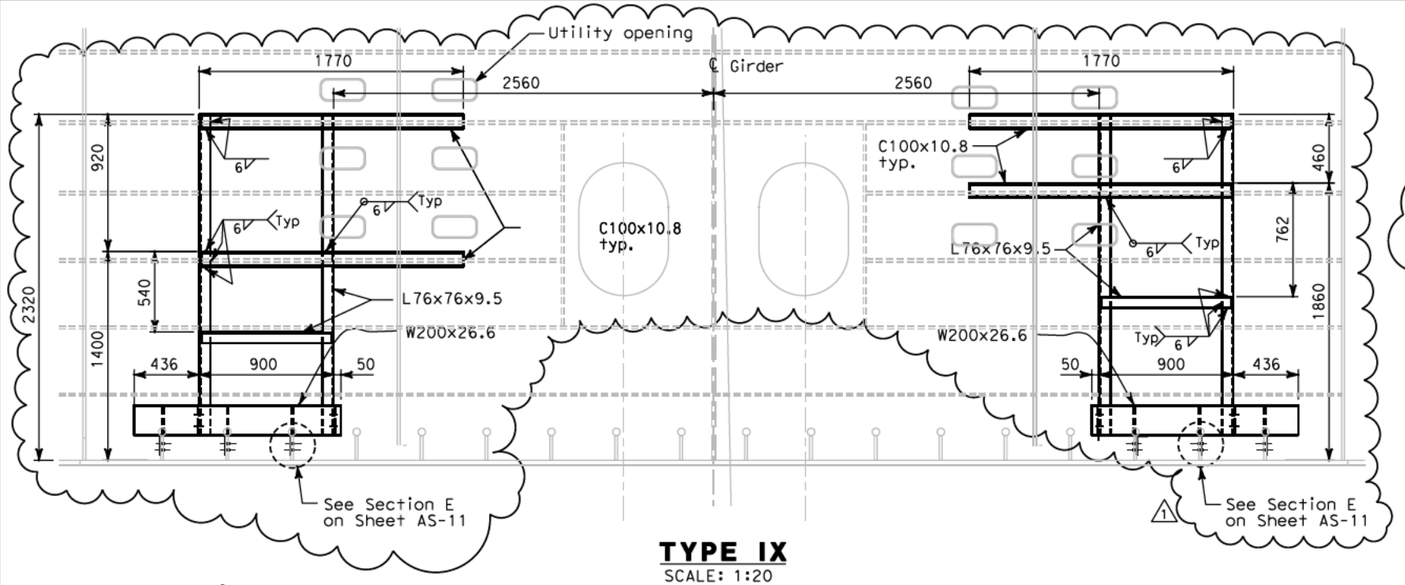

TYPE IX
SCALE: 1:20

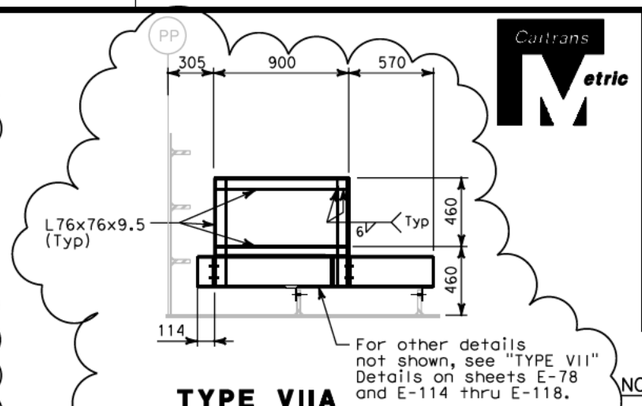

TYPE VIIA
SCALE: 1:20

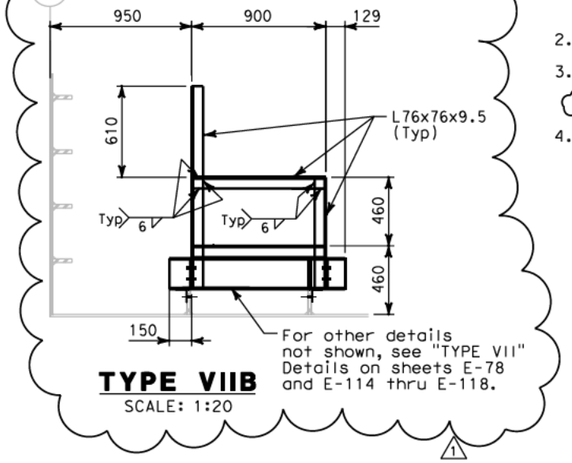

TYPE VIIB
SCALE: 1:20

NOTES:

1. The contractor shall verify all controlling field dimensions before ordering or fabricating any material.
2. For structural notes, see sheet AS-1.
3. For cable tray support locations, see electrical plans and dwgs AS-16K through AS-16R.
4. For details not shown, see sheet AS-11.

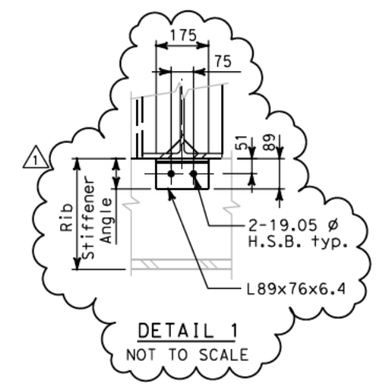

DETAIL 1
NOT TO SCALE

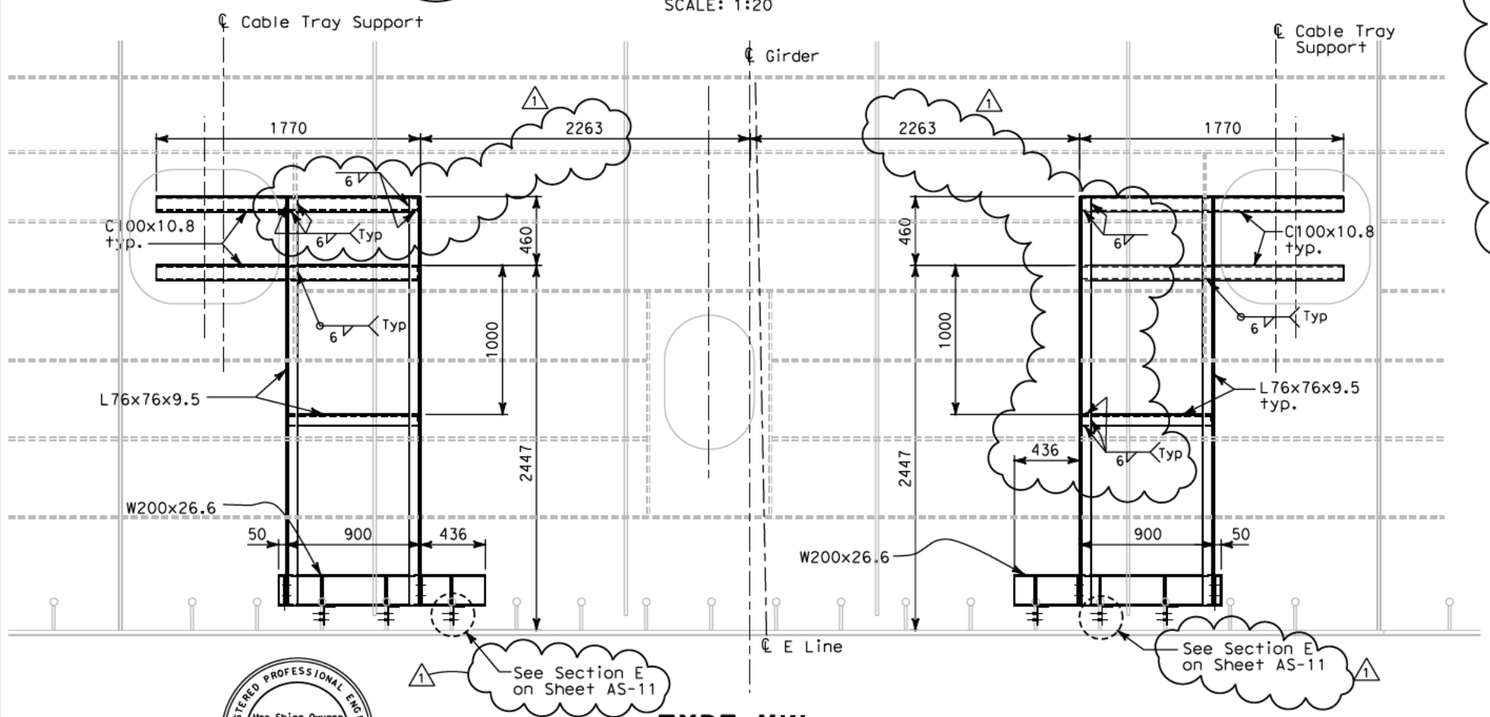

TYPE VIII
SCALE: 1:20

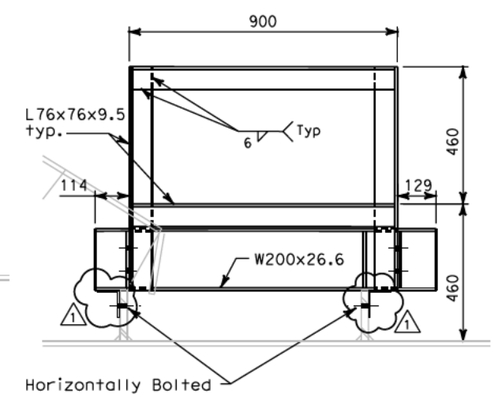

FRONT VIEW

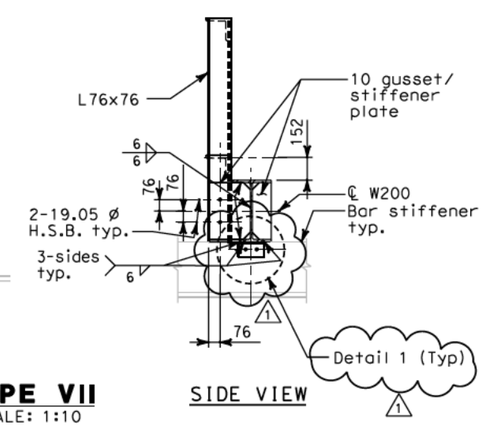

SIDE VIEW

TYPE VII
SCALE: 1:10

ALL DIMENSIONS ARE IN MILLIMETERS UNLESS OTHERWISE SHOWN

REGISTERED PROFESSIONAL ENGINEER Mee Shing Owyang No. 24960 Exp. 12/31/09 CIVIL STATE OF CALIFORNIA

FOR REVISION ONLY

REQUEST FOR INFORMATION NOT ADDRESSED IN THIS CCO REMAIN IN FORCE

MARK	DATE	DESCRIPTIONS	BY	CH'D	CCO#
1	02/25/08	CABLE TRAY CHANGES	TW	MSO	42S1

REVISIONS

CONTRACT CHANGE ORDER NO._____
SHEET _____ OF _____

Bob Zandipour
DESIGN OVERSIGHT
4-14-04
SIGN OFF DATE

	BY	CHECKED
DESIGN	I. Horton	M. S. Owyang
DETAILS	D. Chin	M. S. Owyang
QUANTITIES	I. Horton	P. McNamee

PREPARED FOR THE STATE OF CALIFORNIA DEPARTMENT OF TRANSPORTATION

Gene Lusherovich
PROJECT ENGINEER

BRIDGE NO. 34-0006
KILOMETER POST 13.2/13.9

SAS SUPERSTRUCTURE
CABLE TRAY SUPPORT DETAIL

AS-15

SHEET 15 OF 16

DISREGARD PRINTS BEARING EARLIER REVISION DATES

REVISION DATES (PRELIMINARY STAGE ONLY)

DESIGN DETAIL SHEET (METRIC) (REV. 3/1/98)

ORIGINAL SCALE IN MILLIMETERS FOR REDUCED PLANS 0 10 20 30 40 50 60 70 80 90 100

CU 04251
EA 0120F1

FILE => T:\13103\MS\pse\SAS Struc\CCO\SAS CCO42S1\CCO 42S1 Final Submittal 2008-07-11\04-0120f1_0085R01.dgn

USERNAME => gorclar DATE PLOTTED => 8/28/2008 TIME PLOTTED => 3:22:34 PM

#REQUEST

DIST	COUNTY	ROUTE	KILOMETER POST TOTAL PROJECT	SHEET No	TOTAL SHEETS
04	SF	80	13.2/13.9	86R1	1204

REGISTERED CIVIL ENGINEER 4/2/04 DATE

12-6-04
PLANS APPROVAL DATE

REGISTERED PROFESSIONAL ENGINEER Mee Shing Owyang No. 24960 Exp. 12/31/07 CIVIL STATE OF CALIFORNIA

The State of California or its officers or agents shall not be responsible for the accuracy or completeness of electronic copies of this plan sheet.

Parsons Brinckerhoff Quade & Douglas, Inc.
303 Second Street, Suite 700N
San Francisco, CA 94107

Caltrans now has a web site! To get to the web site, go to http://www.dot.ca.gov

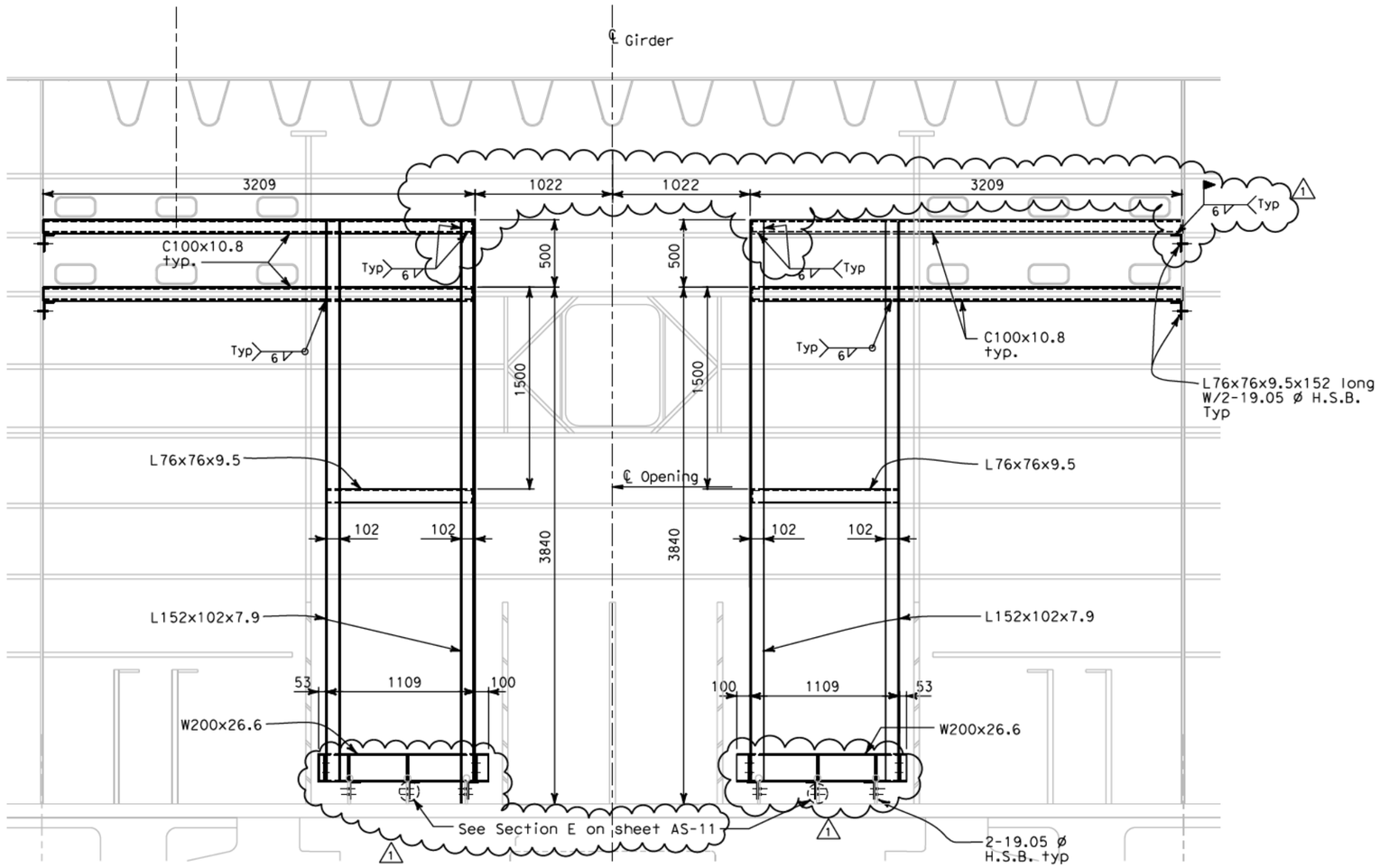

TYPE X
SCALE: 1:20

NOTES:

1. The contractor shall verify all controlling field dimensions before ordering or fabricating any material.
2. For structural notes, see sheet AS-1.
3. For cable tray support locations, see electrical plans and drawings AS-16K through AS-16R. (1)
4. For details not shown, see sheet AS-11.

REGISTERED PROFESSIONAL ENGINEER Mee Shing Owyang No. 24960 Exp. 12/31/09 CIVIL STATE OF CALIFORNIA

FOR REVISION ONLY

REQUEST FOR INFORMATION NOT ADDRESSED IN THIS CCO REMAIN IN FORCE

MARK	DATE	DESCRIPTIONS	BY	CH'D	CCO#
1	02/25/08	CABLE TRAY CHANGES	TW	MSO	42S1

REVISIONS

CONTRACT CHANGE ORDER NO. _____
SHEET _____ OF _____

ALL DIMENSIONS ARE IN MILLIMETERS UNLESS OTHERWISE SHOWN

DESIGN OVERSIGHT
SIGN OFF DATE

	BY	CHECKED
DESIGN	I. Horton	M. S. Owyang
DETAILS	D. Chin	M. S. Owyang
QUANTITIES	I. Horton	P. McNamee

PREPARED FOR THE STATE OF CALIFORNIA DEPARTMENT OF TRANSPORTATION

PROJECT ENGINEER

BRIDGE NO.
KILOMETER POST

SAS SUPERSTRUCTURE
CABLE TRAY SUPPORT DETAIL
AS-16

DESIGN DETAIL SHEET (METRIC) (REV. 3/1/98)

ORIGINAL SCALE IN MILLIMETERS FOR REDUCED PLANS 0 10 20 30 40 50 60 70 80 90 100

CU 04251
EA 0120F1

DISREGARD PRINTS BEARING EARLIER REVISION DATES

REVISION DATES (PRELIMINARY STAGE ONLY)

SHEET 16 OF 16

FILE => T:\13103\MS\pse\SAS Struc\CCO\SAS CCO42S1\CCO 42S1 Final Submittal 2008-07-11\04-0120f1_0086R01.dgn

USERNAME => garclar DATE PLOTTED => 8/28/2008 TIME PLOTTED => 3:24:27 PM

#FREQUEST

DIST	COUNTY	ROUTE	KILOMETER POST TOTAL PROJECT	SHEET No	TOTAL SHEETS
04	SF	80	13.2/13.9	86S1	1204

REGISTERED CIVIL ENGINEER 2/22/08 DATE

PLANS APPROVAL DATE

REGISTERED PROFESSIONAL ENGINEER Lawrence M. Johnson No. C 44006 Exp. 6/30/09 CIVIL STATE OF CALIFORNIA

The State of California or its officers or agents shall not be responsible for the accuracy or completeness of electronic copies of this plan sheet.

Parsons Brinckerhoff Quade & Douglas, Inc.
303 Second Street, Suite 700N
San Francisco, CA 94107

Caltrans now has a web site! To get to the web site, go to: http://www.dot.ca.gov

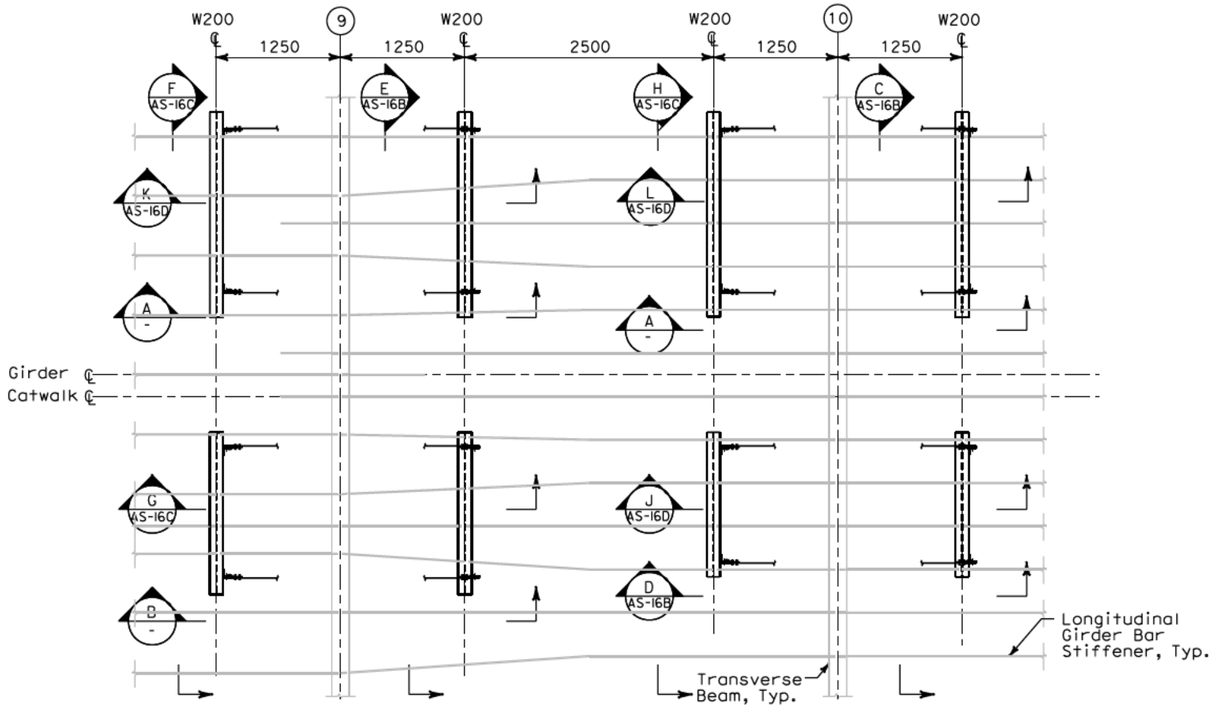

WESTBOUND CABLE SUPPORT PLAN - PANEL POINTS 9 AND 10

SCALE: 1:30

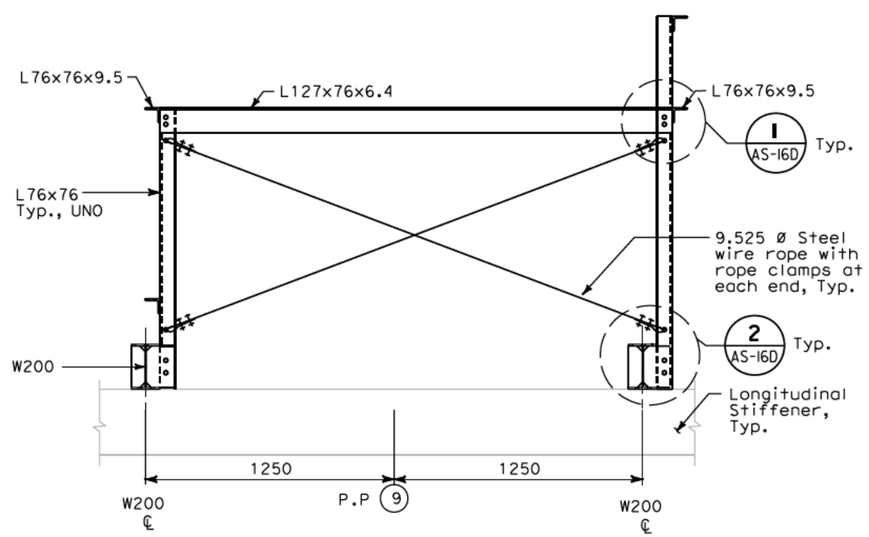

B - SECTION
SCALE: 1:15

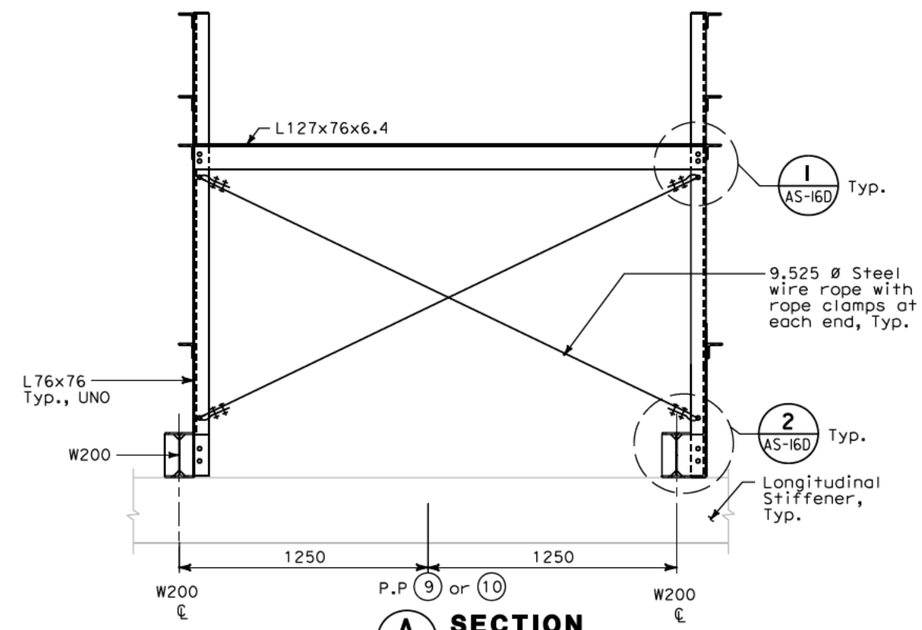

A - SECTION
SCALE: 1:15

ALL DIMENSIONS ARE IN MILLIMETERS UNLESS OTHERWISE SHOWN

NOTES:

1. For structural notes, see sheet AS-1.
2. For cable tray support locations, see electrical plans and dwgs AS-16K and AS-16R.

REQUEST FOR INFORMATION NOT ADDRESSED IN THIS CCO REMAIN IN FORCE

MARK	DATE	DESCRIPTIONS	BY	CH'D	CCO#
0	02/25/08	CABLE TRAY CHANGES	TW	LMJ	42S1

REVISIONS

CONTRACT CHANGE ORDER NO._____
SHEET _____ OF _____

Bob Zandipour
DESIGN OVERSIGHT
SIGN OFF DATE

	BY	CHECKED
DESIGN	L. Johnson	M. S. Owyang
DETAILS	A. Antonio	L. Johnson
QUANTITIES	L. Johnson	P. McNamee

PREPARED FOR THE STATE OF CALIFORNIA DEPARTMENT OF TRANSPORTATION

Gene Lusherovich
PROJECT ENGINEER

BRIDGE NO. 34-0006
KILOMETER POST 13.2/13.9

SAS SUPERSTRUCTURE

WESTBOUND CABLE TRAY SUPPORT DETAILS AT PP 9 AND PP 10 - SHEET 1 OF 4

AS-16A

DESIGN DETAIL SHEET (METRIC) (REV. 3/1/98)

ORIGINAL SCALE IN MILLIMETERS FOR REDUCED PLANS 0 10 20 30 40 50 60 70 80 90 100

CU 04251
EA 0120F1

DISREGARD PRINTS BEARING EARLIER REVISION DATES

REVISION DATES (PRELIMINARY STAGE ONLY)

SHEET 16A OF 16

FILE => T:\13103\MS\pse\SAS Struc\CCO\SAS CCO42S1\CCO 42S1 Final Submittal 2008-07-11\04-0120f1_0086S01.dgn

USERNAME => tiorfco DATE PLOTTED => 7/21/2008 TIME PLOTTED => 2:56:40 PM

$FREQUEST

DIST	COUNTY	ROUTE	KILOMETER POST TOTAL PROJECT	SHEET No	TOTAL SHEETS
04	SF	80	13.2/13.9	86S2	1204

REGISTERED CIVIL ENGINEER 2/22/08 DATE

PLANS APPROVAL DATE

The State of California or its officers or agents shall not be responsible for the accuracy or completeness of electronic copies of this plan sheet.

REGISTERED PROFESSIONAL ENGINEER Lawrence M. Johnson No. C 44006 Exp. 6/30/09 CIVIL STATE OF CALIFORNIA

Parsons Brinckerhoff Quade & Douglas, Inc.
303 Second Street, Suite 700N
San Francisco, CA 94107

Caltrans now has a web site! To get to the web site, go to: http://www.dot.ca.gov

REQUEST FOR INFORMATION NOT ADDRESSED IN THIS CCO REMAIN IN FORCE					
0	02/25/08	CABLE TRAY CHANGES	TW	LMJ	42S1
MARK	DATE	DESCRIPTIONS	BY	CH'D	CCO#
		REVISIONS			

CONTRACT CHANGE ORDER NO._____
SHEET _____ OF _____

NOTES:

1. For structural notes, see sheet AS-1.
2. For cable tray support locations, see electrical plans and dwgs AS-16K and AS-R.

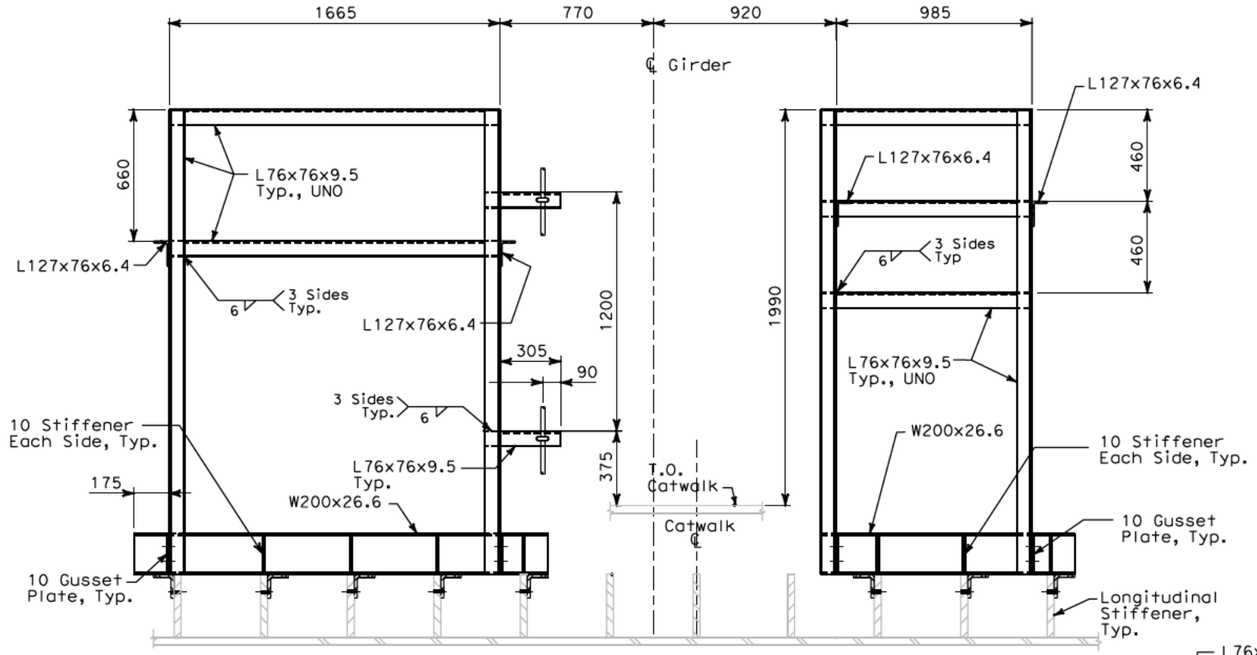

C / AS-16A **SECTION**
SCALE: 1:15

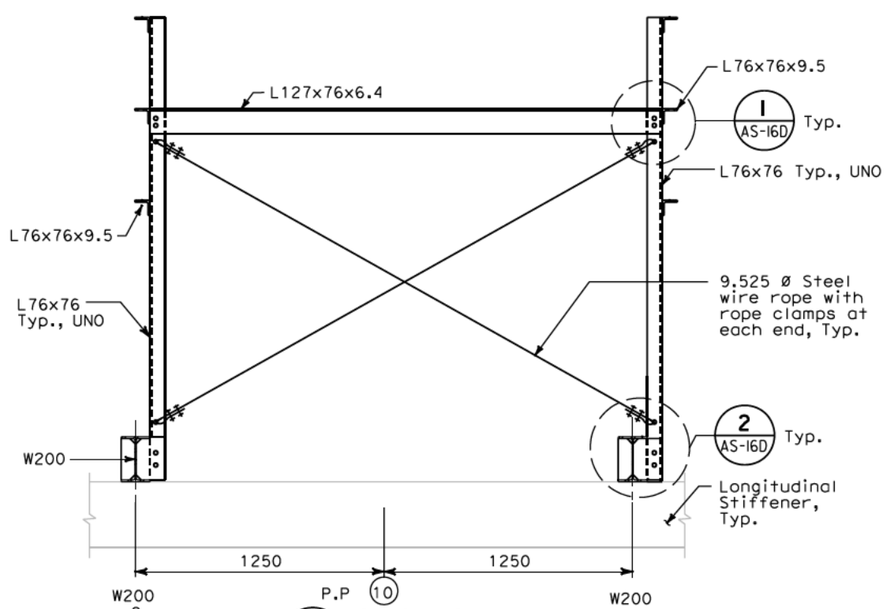

D / AS-16A **SECTION**
SCALE: 1:15

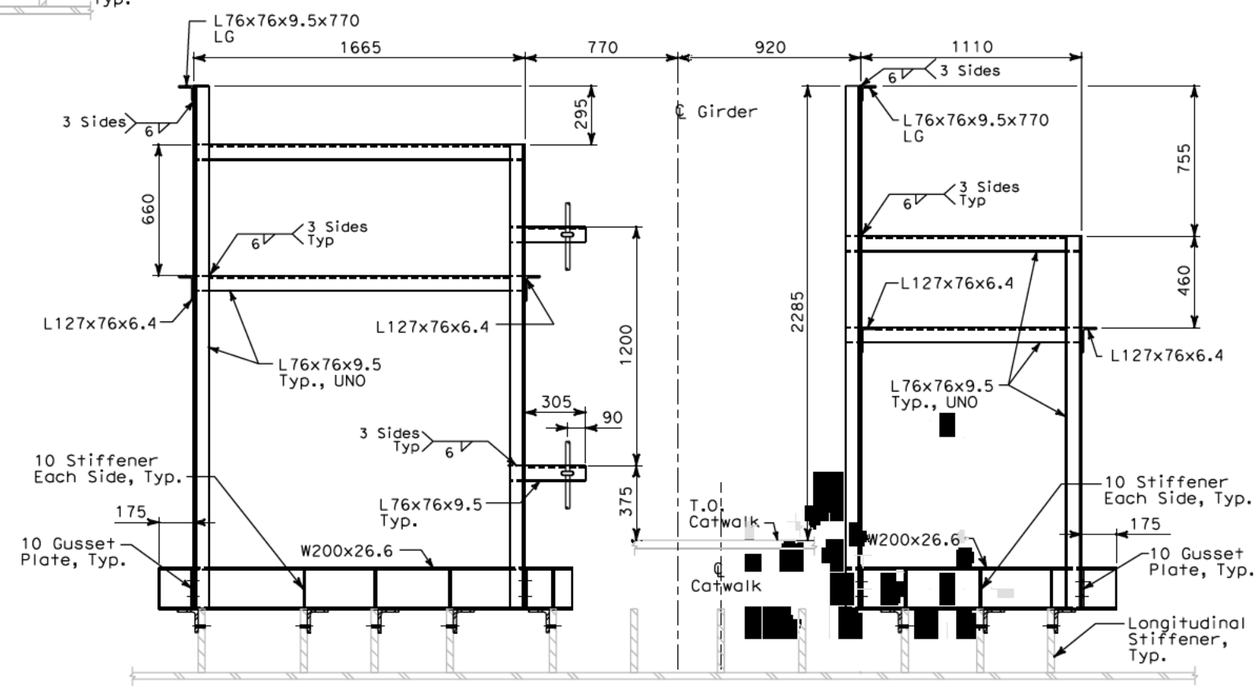

E / AS-16A **SECTION**
SCALE: 1:15

ALL DIMENSIONS ARE IN MILLIMETERS UNLESS OTHERWISE SHOWN

Bob Zandipour
DESIGN OVERSIGHT

SIGN OFF DATE

	BY	CHECKED
DESIGN	L. Johnson	M. S. Owyang
DETAILS	A. Antonio	L. Johnson
QUANTITIES	L. Johnson	P. McNamee

PREPARED FOR THE STATE OF CALIFORNIA DEPARTMENT OF TRANSPORTATION

Brady Nadell
PROJECT ENGINEER

BRIDGE NO. 34-0006
KILOMETER POST 13.2/13.9

SAS SUPERSTRUCTURE

WESTBOUND CABLE TRAY SUPPORT DETAILS AT PP 9 AND PP 10 - SHEET 2 OF 4

AS-16B

DESIGN DETAIL SHEET (METRIC) (REV. 3/1/98)

ORIGINAL SCALE IN MILLIMETERS FOR REDUCED PLANS 0 10 20 30 40 50 60 70 80 90 100

CU 04251
EA 0120F1

DISREGARD PRINTS BEARING EARLIER REVISION DATES

REVISION DATES (PRELIMINARY STAGE ONLY)

SHEET 16B OF 16

FILE => T:\13103\MS\pse\SAS Struc\CCO\SAS CCO42S1\CCO 42S1 Final Submittal 2008-07-11\04-0120f1_0086S02.dgn

$FREQUEST

USERNAME => tlorfco DATE PLOTTED => 7/21/2008 TIME PLOTTED => 2:57:42 PM

DIST	COUNTY	ROUTE	KILOMETER POST TOTAL PROJECT	SHEET No	TOTAL SHEETS
04	SF	80	13.2/13.9	86S3	1204

REGISTERED CIVIL ENGINEER 2/22/08 DATE

PLANS APPROVAL DATE

REGISTERED PROFESSIONAL ENGINEER Lawrence M. Johnson No. C 44006 Exp. 6/30/09 CIVIL STATE OF CALIFORNIA

The State of California or its officers or agents shall not be responsible for the accuracy or completeness of electronic copies of this plan sheet.

Parsons Brinckerhoff Quade & Douglas, Inc.
303 Second Street, Suite 700N
San Francisco, CA 94107

Caltrans now has a web site! To get to the web site, go to: http://www.dot.ca.gov

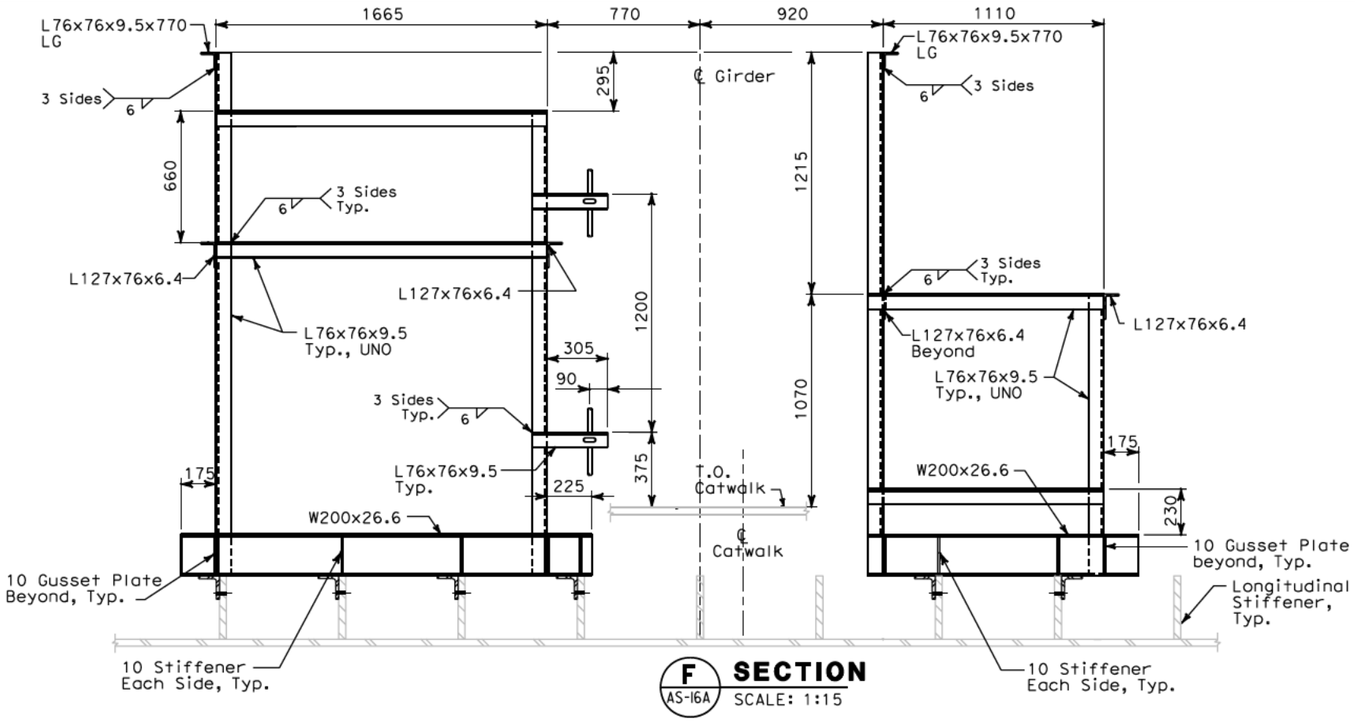

F AS-16A **SECTION**
SCALE: 1:15

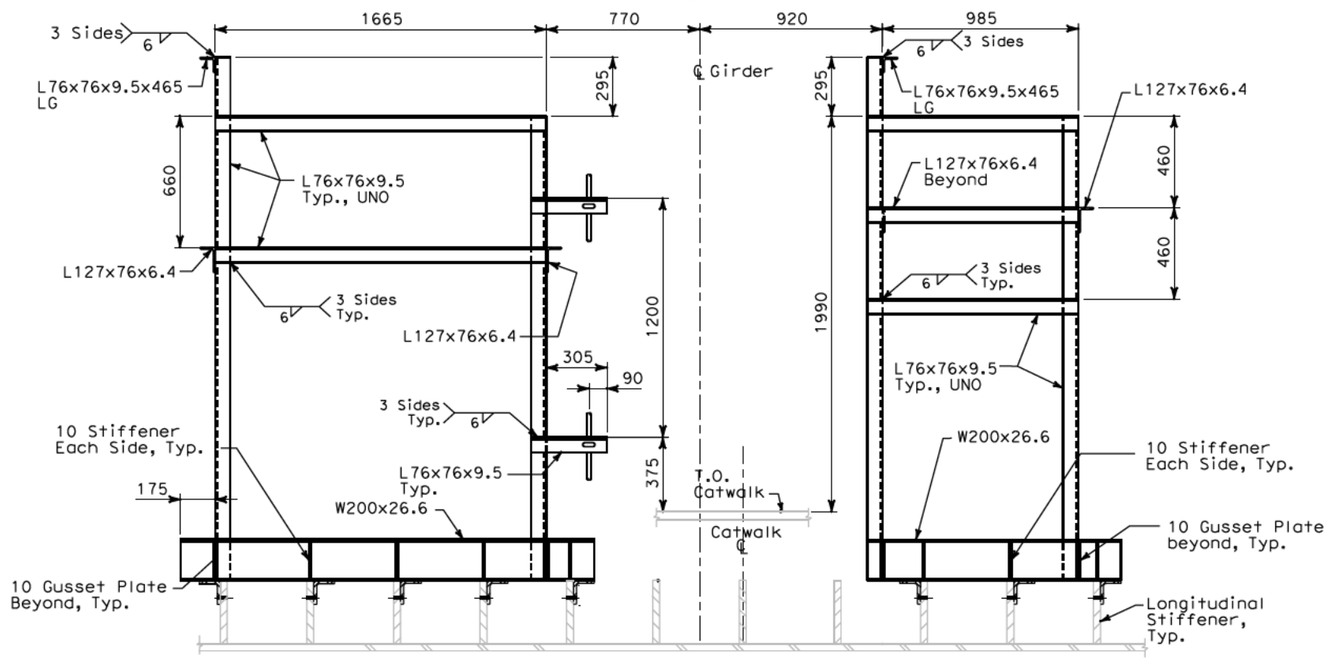

H AS-16A **SECTION**
SCALE: 1:15

ALL DIMENSIONS ARE IN MILLIMETERS UNLESS OTHERWISE SHOWN

REQUEST FOR INFORMATION NOT ADDRESSED IN THIS CCO REMAIN IN FORCE					
0	02/25/08	CABLE TRAY CHANGES	TW	LMJ	42S1
MARK	DATE	DESCRIPTIONS	BY	CH'D	CCO#
REVISIONS					

CONTRACT CHANGE ORDER NO._____
SHEET _____ OF _____

NOTES:

1. For structural notes, see sheet AS-1.
2. For cable tray support locations, see electrical plans and dwgs AS-16K and AS-16R.

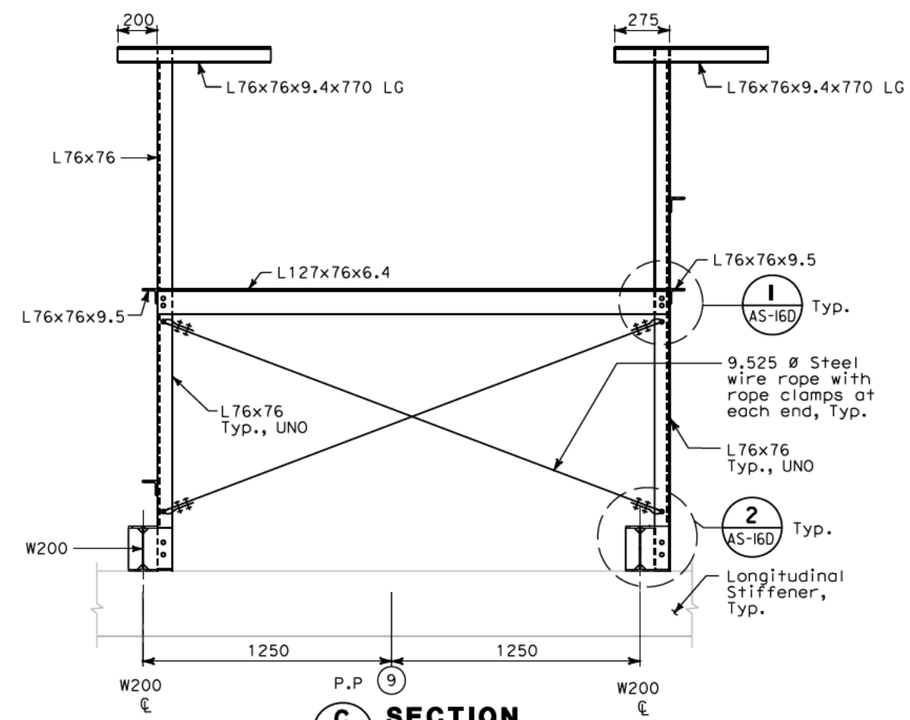

G AS-16A **SECTION**
SCALE: 1:15

Bob Zandipour
DESIGN OVERSIGHT

SIGN OFF DATE

	BY	CHECKED
DESIGN	L. Johnson	W. S. Owyang
DETAILS	A. Antonio	L. Johnson
QUANTITIES	L. Johnson	P. McNamee

PREPARED FOR THE STATE OF CALIFORNIA DEPARTMENT OF TRANSPORTATION

Brady Nadell
PROJECT ENGINEER

BRIDGE NO. 34-0006
KILOMETER POST 13.2/13.9

SAS SUPERSTRUCTURE

WESTBOUND CABLE TRAY SUPPORT DETAILS AT PP 9 AND PP 10 - SHEET 3 OF 4

AS-16C

DISREGARD PRINTS BEARING EARLIER REVISION DATES

REVISION DATES (PRELIMINARY STAGE ONLY)

SHEET 16C OF 16

DESIGN DETAIL SHEET (METRIC) (REV. 3/1/98)

ORIGINAL SCALE IN MILLIMETERS FOR REDUCED PLANS 0 10 20 30 40 50 60 70 80 90 100

CU 04251
EA 0120F1

FILE => T:\13103\MS\pse\SAS Struc\CCO\SAS CCO42S1\CCO 42S1 Final Submittal 2008-07-11\04-0120f1_0086S03.dgn

USERNAME => llorfco DATE PLOTTED => 7/21/2008 TIME PLOTTED => 2:58:44 PM

$FREQUEST

DIST	COUNTY	ROUTE	KILOMETER POST TOTAL PROJECT	SHEET No	TOTAL SHEETS
04	SF	80	13.2/13.9	86S4	1204

REGISTERED CIVIL ENGINEER 2/22/08 DATE

PLANS APPROVAL DATE

REGISTERED PROFESSIONAL ENGINEER Lawrence M. Johnson No. C 44006 Exp. 6/30/09 CIVIL STATE OF CALIFORNIA

The State of California or its officers or agents shall not be responsible for the accuracy or completeness of electronic copies of this plan sheet.

Parsons Brinckerhoff Quade & Douglas, Inc.
303 Second Street, Suite 700N
San Francisco, CA 94107

Caltrans now has a web site! To get to the web site, go to: http://www.dot.ca.gov

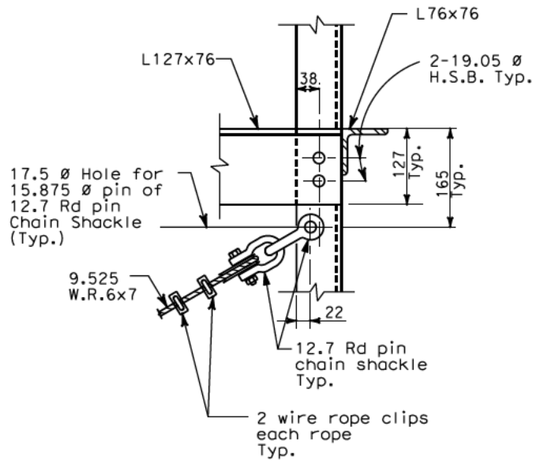

I / AS-16A DETAIL SCALE: 1:5
AS-16B
AS-16C

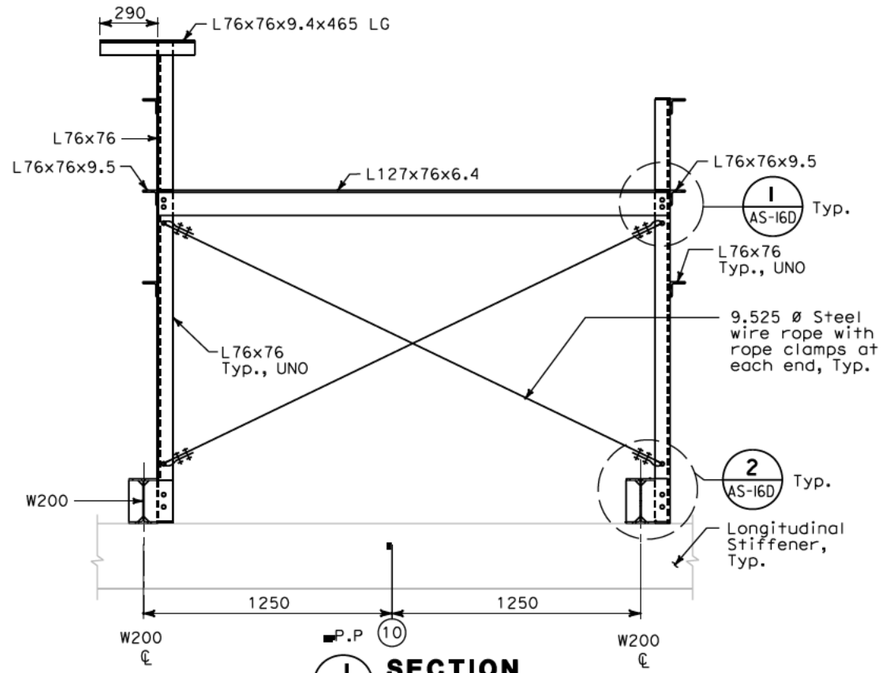

J / AS-16A SECTION SCALE: 1:15

NOTES:

1. For structural notes, see sheet AS-1.
2. For cable tray support locations, see electrical plans and dwgs. AS-16K and AS-16R.

REQUEST FOR INFORMATION NOT ADDRESSED IN THIS CCO REMAIN IN FORCE

MARK	DATE	DESCRIPTIONS	BY	CH'D	CCO#
0	02/25/08	CABLE TRAY CHANGES	TW	LMJ	42S1

REVISIONS

CONTRACT CHANGE ORDER NO._____
SHEET _____ OF _____

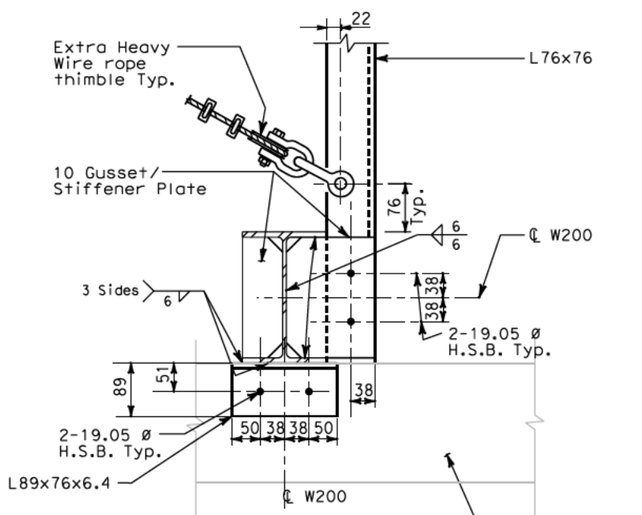

2 / AS-16A DETAIL SCALE: 1:5
AS-16B
AS-16C

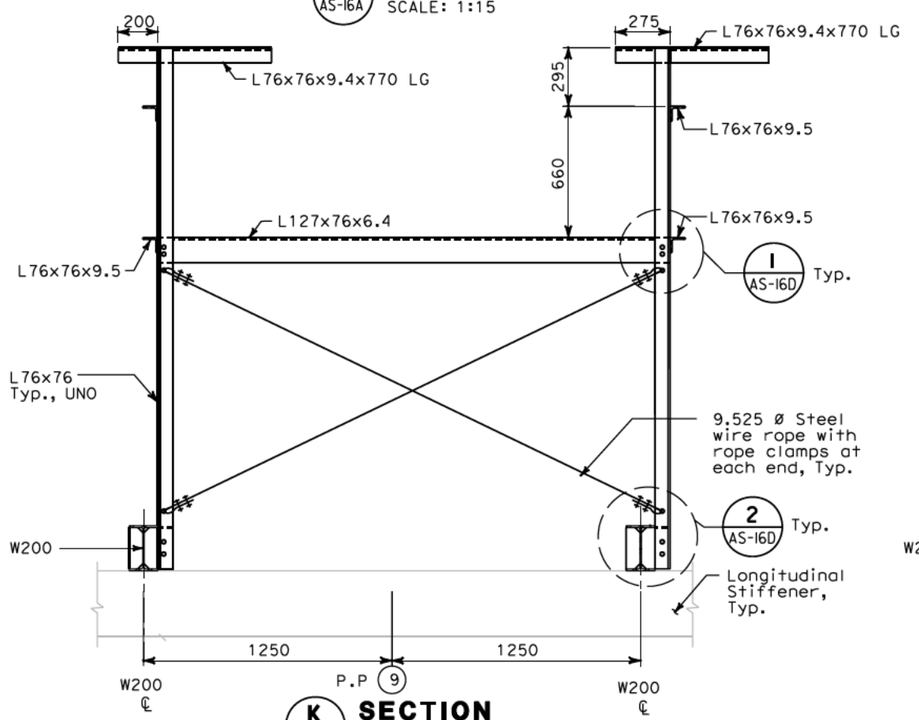

K / AS-16A SECTION SCALE: 1:15

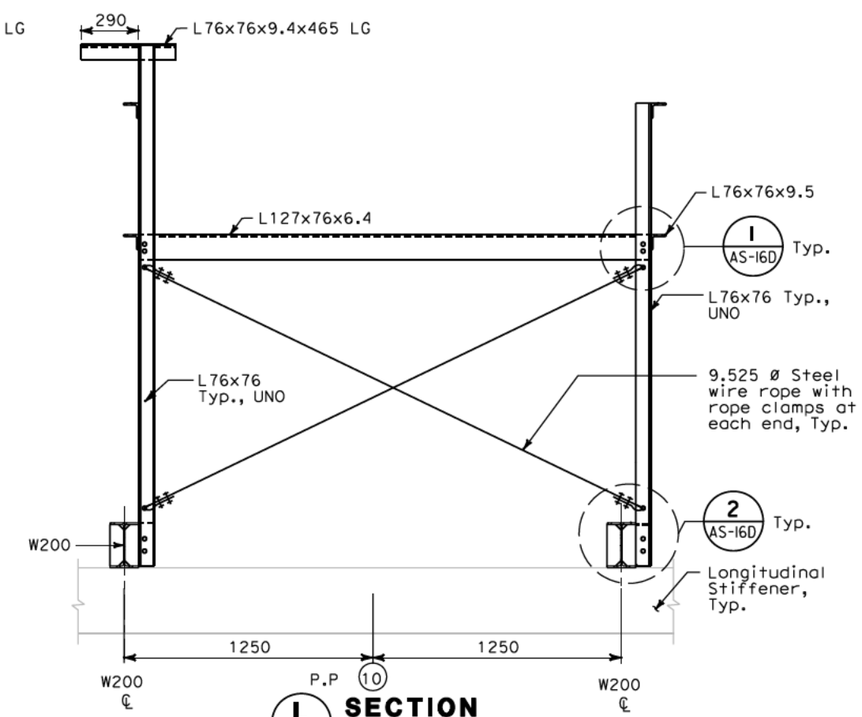

L / AS-16A SECTION SCALE: 1:15

ALL DIMENSIONS ARE IN MILLIMETERS UNLESS OTHERWISE SHOWN

Bob Zandipour
DESIGN OVERSIGHT

SIGN OFF DATE

	BY	CHECKED
DESIGN	L. Johnson	M. S. Owyang
DETAILS	A. Antonio	L. Johnson
QUANTITIES	L. Johnson	P. McNamee

PREPARED FOR THE STATE OF CALIFORNIA DEPARTMENT OF TRANSPORTATION

Brady Nadell
PROJECT ENGINEER

BRIDGE NO. 34-0006
KILOMETER POST 13.2/13.9

SAS SUPERSTRUCTURE

WESTBOUND CABLE TRAY SUPPORT DETAILS AT PP 9 AND PP 10 - SHEET 4 OF 4

AS-16D

DESIGN DETAIL SHEET (METRIC) (REV. 3/1/98)

ORIGINAL SCALE IN MILLIMETERS FOR REDUCED PLANS 0 10 20 30 40 50 60 70 80 90 100

CU 04251
EA 0120F1

DISREGARD PRINTS BEARING EARLIER REVISION DATES

REVISION DATES (PRELIMINARY STAGE ONLY)

SHEET 16D OF 16

FILE => T:\13103\MS\pse\SAS Struc\CCO\SAS CCO42S1\CCO 42S1 Final Submittal 2008-07-11\04-0120f1_0086S04.dgn

USERNAME => llorrco DATE PLOTTED => 7/11/2008 TIME PLOTTED => 11:50:43 PM

#FREQUEST

DIST	COUNTY	ROUTE	KILOMETER POST TOTAL PROJECT	SHEET No	TOTAL SHEETS
04	SF	80	13.2/13.9	86S5	1204

REGISTERED CIVIL ENGINEER DATE 7/22/08

PLANS APPROVAL DATE

REGISTERED PROFESSIONAL ENGINEER Lawrence M. Johnson No. C 44006 Exp. 6/30/09 CIVIL STATE OF CALIFORNIA

The State of California or its officers or agents shall not be responsible for the accuracy or completeness of electronic copies of this plan sheet.

Parsons Brinckerhoff Quade & Douglas, Inc.
303 Second Street, Suite 700N
San Francisco, CA 94107

Caltrans now has a web site! To get to the web site, go to: http://www.dot.ca.gov

Caltrans Metric

REQUEST FOR INFORMATION NOT ADDRESSED IN THIS CCO REMAIN IN FORCE					
0	02/25/08	CABLE TRAY CHANGES	TW	LMJ	42S1
MARK	DATE	DESCRIPTIONS	BY	CH'D	CCO#
REVISIONS					

CONTRACT CHANGE ORDER NO._____
SHEET _____ OF _____

NOTES:

1. For structural notes, see sheet AS-1.
2. For cable tray support locations, see electrical plans and dwgs AS-16K and AS-16R.

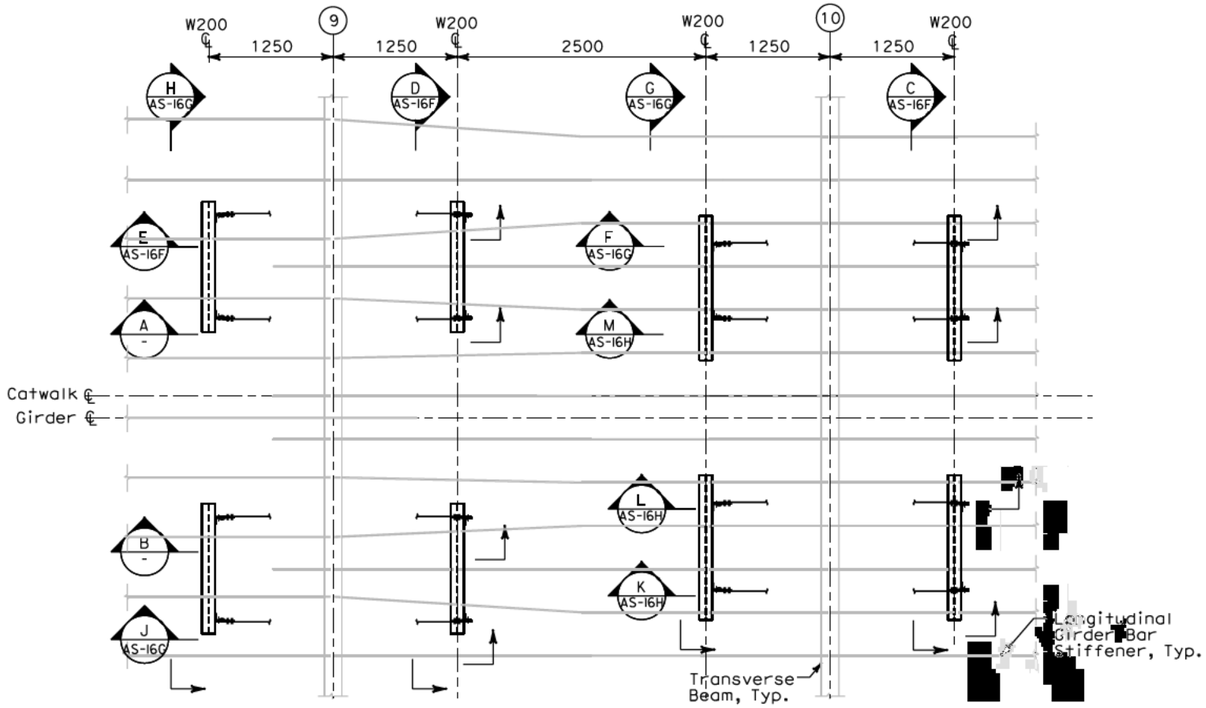

EASTBOUND CABLE SUPPORT PLAN - PANEL POINTS 9 AND 10

SCALE: 1:30

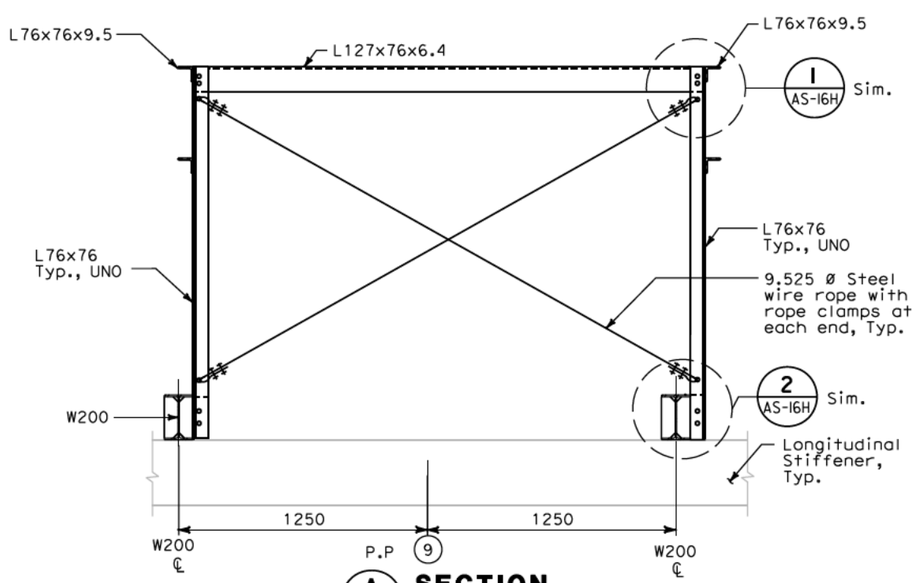

A - SECTION
SCALE: 1:15

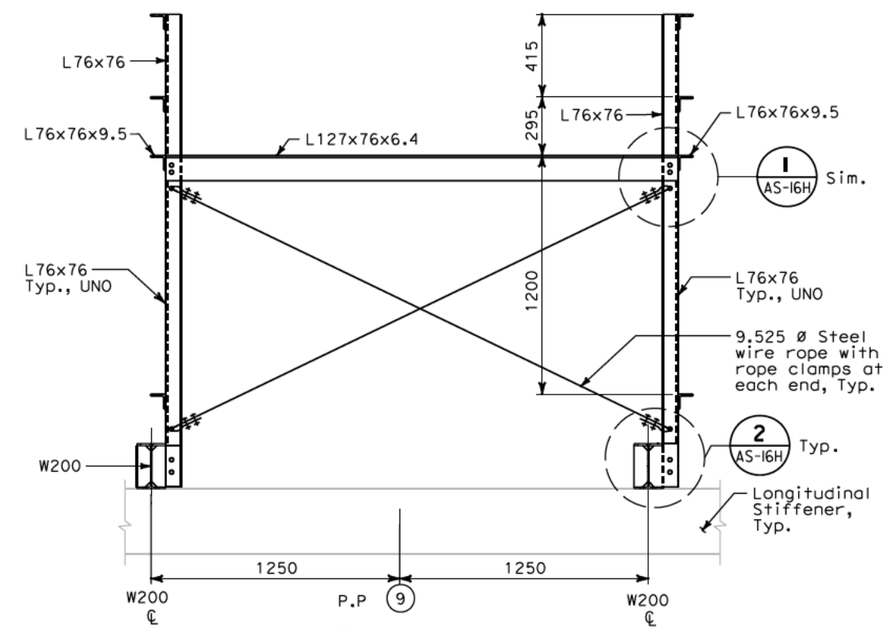

B - SECTION
SCALE: 1:15

ALL DIMENSIONS ARE IN MILLIMETERS UNLESS OTHERWISE SHOWN

Bob Zandipour
DESIGN OVERSIGHT

SIGN OFF DATE

	BY	CHECKED
DESIGN	L. Johnson	M. S. Owyang
DETAILS	A. Antonio	L. Johnson
QUANTITIES	L. Johnson	P. McNamee

PREPARED FOR THE STATE OF CALIFORNIA DEPARTMENT OF TRANSPORTATION

Brady Nadell
PROJECT ENGINEER

BRIDGE NO. 34-0006
KILOMETER POST 13.2/13.9

SAS SUPERSTRUCTURE

EASTBOUND CABLE TRAY SUPPORT DETAILS AT PP 9 AND PP 10 - SHEET 1 OF 4

AS-16E

DESIGN DETAIL SHEET (METRIC) (REV. 3/1/98)

ORIGINAL SCALE IN MILLIMETERS FOR REDUCED PLANS 0 10 20 30 40 50 60 70 80 90 100

CU 04251
EA 0120F1

DISREGARD PRINTS BEARING EARLIER REVISION DATES

REVISION DATES (PRELIMINARY STAGE ONLY)

SHEET 16E OF 16

FILE => T:\13103\MS\pse\SAS Struc\CCO\SAS CCO42S1\CCO 42S1 Final Submittal 2008-07-11\04-0120f1_0086S05.dgn

$FREQUEST

USERNAME => lloricco DATE PLOTTED => 7/21/2008 TIME PLOTTED => 2:59:19 PM

DIST	COUNTY	ROUTE	KILOMETER POST TOTAL PROJECT	SHEET No	TOTAL SHEETS
04	SF	80	13.2/13.9	86S6	1204

REGISTERED CIVIL ENGINEER DATE 2/22/08

PLANS APPROVAL DATE

REGISTERED PROFESSIONAL ENGINEER Lawrence M. Johnson No. C 44006 Exp. 6/30/09 CIVIL STATE OF CALIFORNIA

The State of California or its officers or agents shall not be responsible for the accuracy or completeness of electronic copies of this plan sheet.

Parsons Brinckerhoff Quade & Douglas, Inc.
303 Second Street, Suite 700N
San Francisco, CA 94107

Caltrans now has a web site! To get to the web site, go to: http://www.dot.ca.gov

REQUEST FOR INFORMATION NOT ADDRESSED IN THIS CCO REMAIN IN FORCE

MARK	DATE	DESCRIPTIONS	BY	CH'D	CCO#
0	02/25/08	CABLE TRAY CHANGES	TW	LMJ	42S1

REVISIONS

CONTRACT CHANGE ORDER NO._____
SHEET _____ OF _____

NOTES:

1. For structural notes, see sheet AS-1.
2. For cable tray support locations, see electrical plans and dwgs AS-16K and AS-16R.

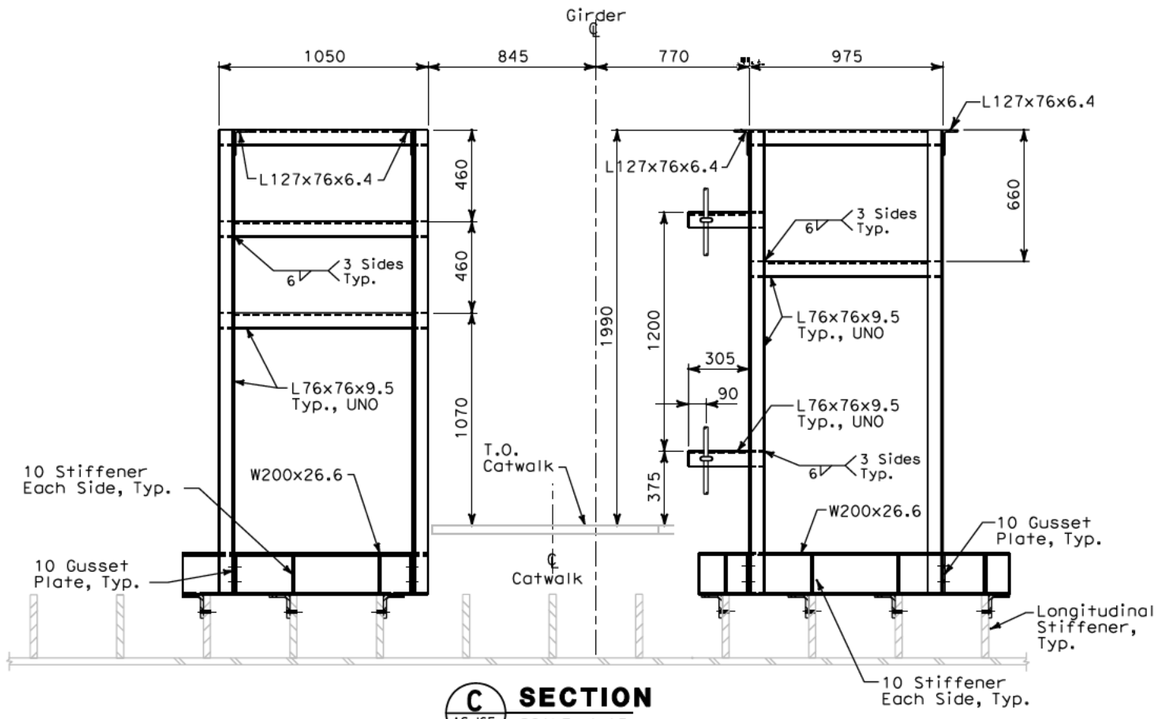

C AS-16E **SECTION** SCALE: 1:15

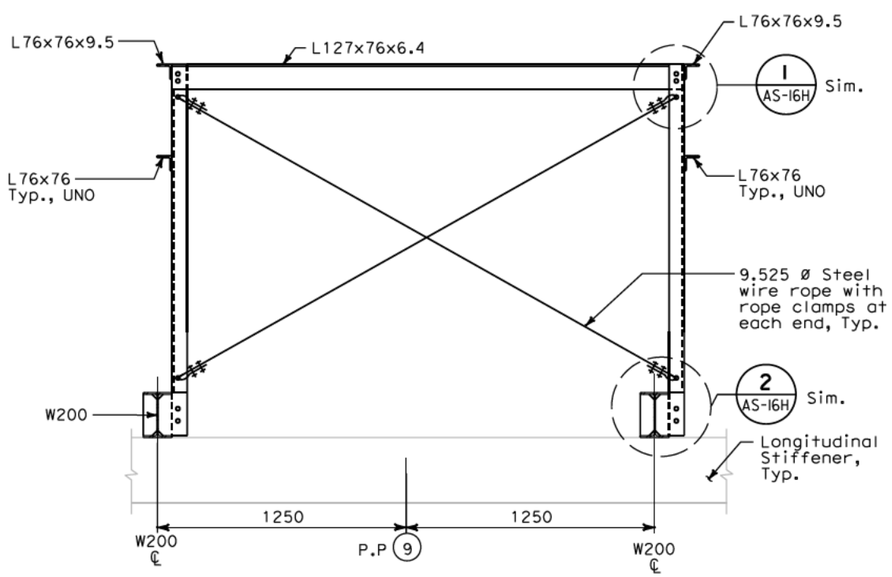

E AS-16E **SECTION** SCALE: 1:15

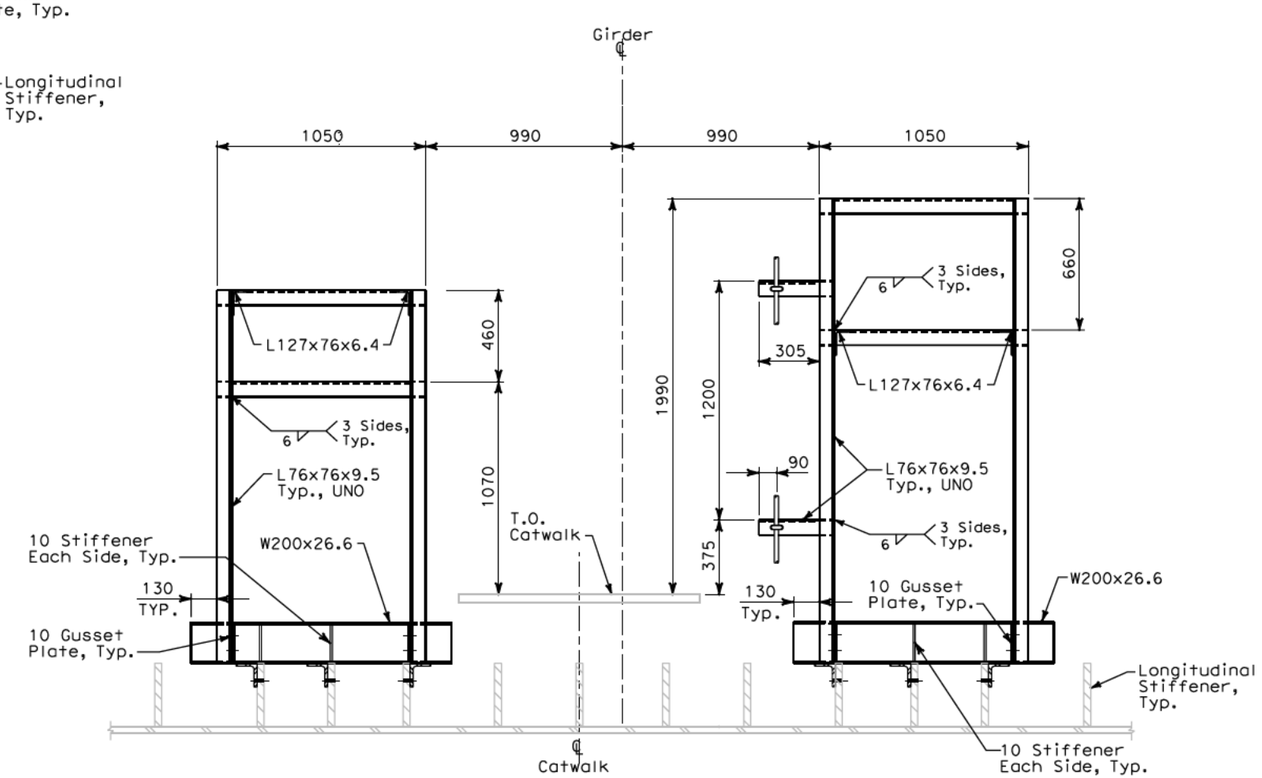

D AS-16E **SECTION** SCALE: 1:15

ALL DIMENSIONS ARE IN MILLIMETERS UNLESS OTHERWISE SHOWN

Bob Zandipour
DESIGN OVERSIGHT

SIGN OFF DATE

DESIGN	BY L. Johnson	CHECKED M. S. Owyang	
DETAILS	BY A. Antonio	CHECKED L. Johnson	
QUANTITIES	BY L. Johnson	CHECKED P. McNamee	

PREPARED FOR THE STATE OF CALIFORNIA DEPARTMENT OF TRANSPORTATION

Brady Nadell
PROJECT ENGINEER

BRIDGE NO. 34-0006
KILOMETER POST 13.2/13.9

SAS SUPERSTRUCTURE

EASTBOUND - CABLE TRAY SUPPORT DETAILS AT PP 9 AND PP 10 - SHEET 2 OF 4

AS-16F

DESIGN DETAIL SHEET (METRIC) (REV. 3/1/98)

ORIGINAL SCALE IN MILLIMETERS FOR REDUCED PLANS 0 10 20 30 40 50 60 70 80 90 100

CU 04251
EA 0120F1

DISREGARD PRINTS BEARING EARLIER REVISION DATES

REVISION DATES (PRELIMINARY STAGE ONLY)

SHEET 16F OF 16

FILE => T:\13103\MS\pse\SAS Struc\CCO\SAS CCO42S1\CCO 42S1 Final Submittal 2008-07-11\04-0120f1_0086S06.dgn

USERNAME => llorico DATE PLOTTED => 7/21/2008 TIME PLOTTED => 2:59:43 PM

#FREQUEST

DIST	COUNTY	ROUTE	KILOMETER POST TOTAL PROJECT	SHEET No	TOTAL SHEETS
04	SF	80	13.2/13.9	86S7	1204

REGISTERED CIVIL ENGINEER DATE 2/22/08

PLANS APPROVAL DATE

REGISTERED PROFESSIONAL ENGINEER Lawrence M. Johnson No. C 44006 Exp. 6/30/09 CIVIL STATE OF CALIFORNIA

The State of California or its officers or agents shall not be responsible for the accuracy or completeness of electronic copies of this plan sheet.

Parsons Brinckerhoff Quade & Douglas, Inc.
303 Second Street, Suite 700N
San Francisco, CA 94107

Caltrans now has a web site! To get to the web site, go to: http://www.dot.ca.gov

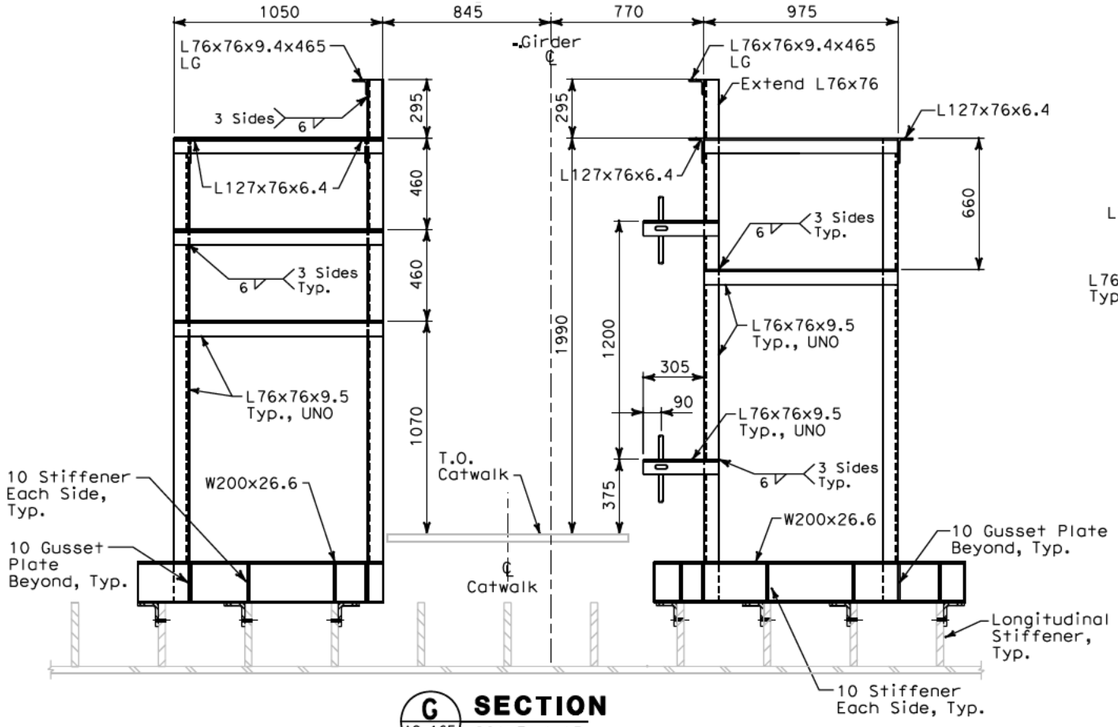

G AS-16E **SECTION** SCALE: 1:15

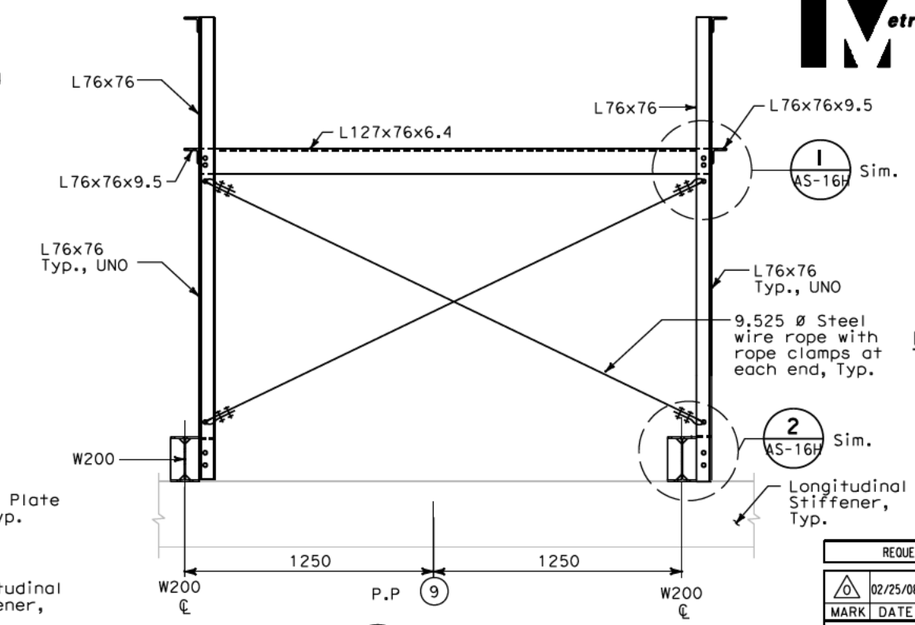

J AS-16E **SECTION** SCALE: 1:15

NOTES:

1. For structural notes, see sheet AS-1.
2. For cable tray support locations, see electrical plans and dwgs. AS-16K and AS-16R.

REQUEST FOR INFORMATION NOT ADDRESSED IN THIS CCO REMAIN IN FORCE

MARK	DATE	DESCRIPTIONS	BY	CH'D	CCO#
0	02/25/08	CABLE TRAY CHANGES	TW	LMJ	42S1

REVISIONS

CONTRACT CHANGE ORDER NO._____
SHEET _____ OF _____

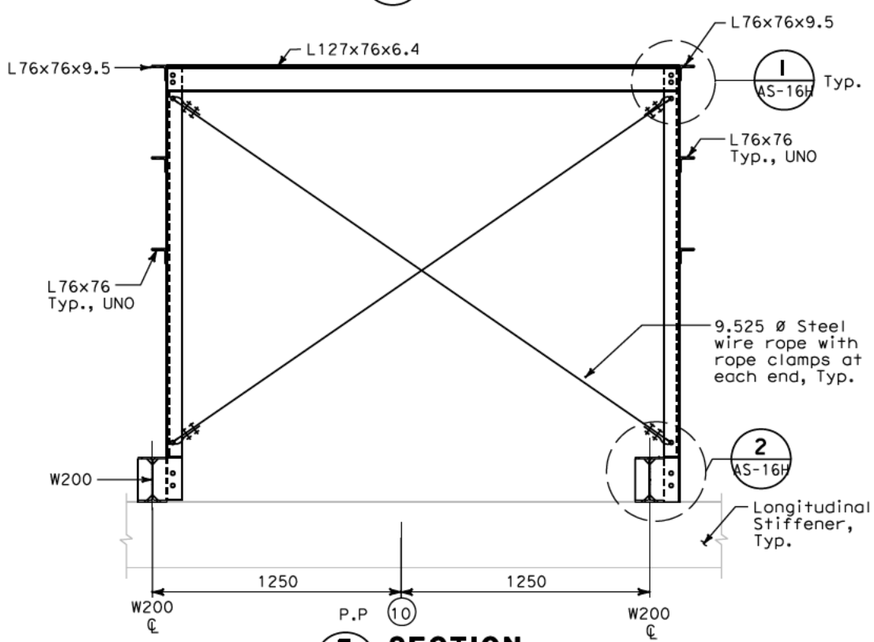

F AS-16E **SECTION** SCALE: 1:15

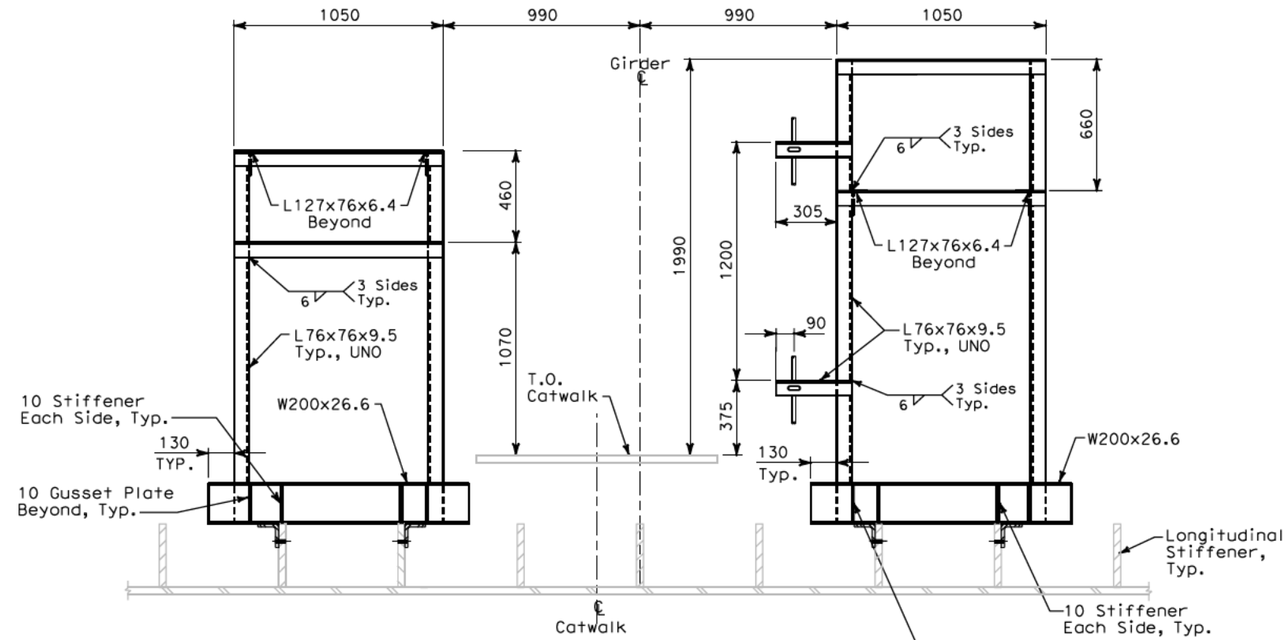

H AS-16E **SECTION** SCALE: 1:15

ALL DIMENSIONS ARE IN MILLIMETERS UNLESS OTHERWISE SHOWN

Bob Zandipour
DESIGN OVERSIGHT

SIGN OFF DATE

	BY	CHECKED
DESIGN	L. Johnson	M. S. Owyang
DETAILS	A. Antonio	L. Johnson
QUANTITIES	L. Johnson	P. McNamee

PREPARED FOR THE STATE OF CALIFORNIA DEPARTMENT OF TRANSPORTATION

Brady Nadell
PROJECT ENGINEER

BRIDGE NO. 34-0006
KILOMETER POST 13.2/13.9

SAS SUPERSTRUCTURE

EASTBOUND CABLE TRAY SUPPORT DETAILS AT PP 9 AND PP 10 - SHEET 3 OF 4

AS-16G

DESIGN DETAIL SHEET (METRIC) (REV. 3/1/98)

ORIGINAL SCALE IN MILLIMETERS FOR REDUCED PLANS 0 10 20 30 40 50 60 70 80 90 100

CU 04251
EA 0120F1

DISREGARD PRINTS BEARING EARLIER REVISION DATES

REVISION DATES (PRELIMINARY STAGE ONLY)

SHEET 16G OF 16

FILE => T:\13103\MS\pse\SAS Struc\CCO\SAS CCO42S1\CCO 42S1 Final Submittal 2008-07-11\04-0120f1_0086S07.dgn

USERNAME => llorico DATE PLOTTED => 7/21/2008 TIME PLOTTED => 3:00:11 PM

#REQUEST

DIST	COUNTY	ROUTE	KILOMETER POST TOTAL PROJECT	SHEET No	TOTAL SHEETS
04	SF	80	13.2/13.9	86S8	1204

REGISTERED CIVIL ENGINEER DATE 2/22/08

PLANS APPROVAL DATE

REGISTERED PROFESSIONAL ENGINEER Lawrence M. Johnson No. C 44006 Exp. 6/30/09 CIVIL STATE OF CALIFORNIA

The State of California or its officers or agents shall not be responsible for the accuracy or completeness of electronic copies of this plan sheet.

Parsons Brinckerhoff Quade & Douglas, Inc.
303 Second Street, Suite 700N
San Francisco, CA 94107

Caltrans now has a web site! To get to the web site, go to: http://www.dot.ca.gov

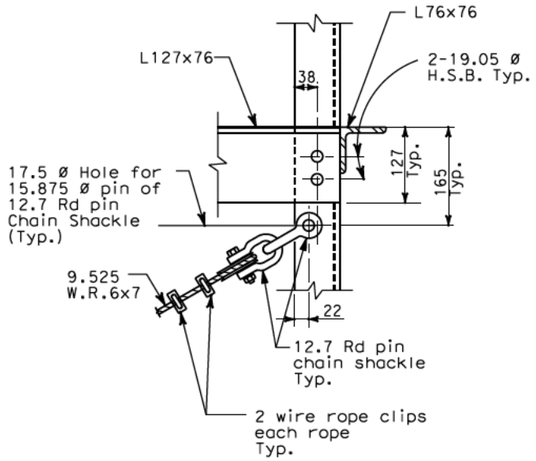

1 AS-16E DETAIL SCALE: 1:5

AS-16F
AS-16G

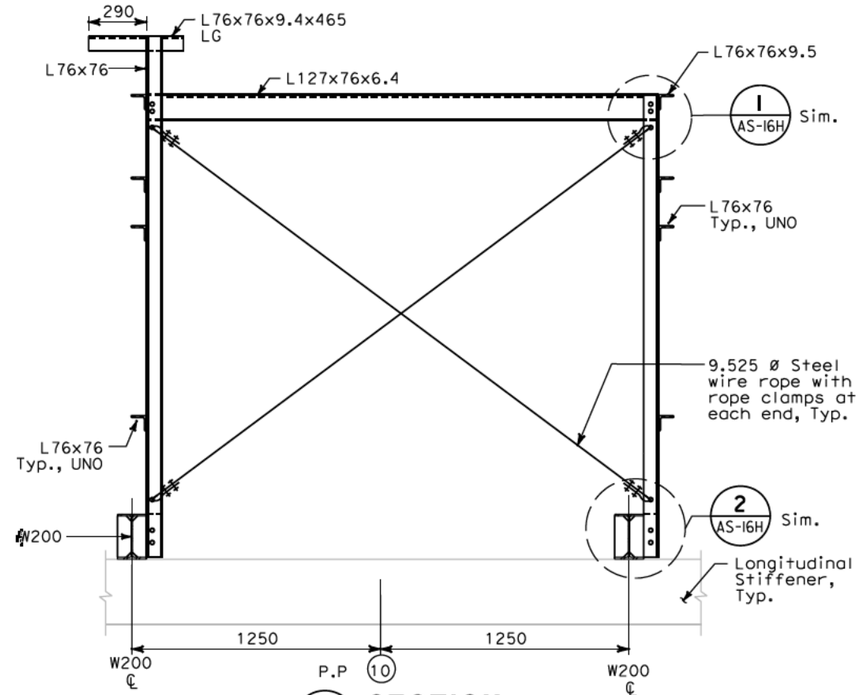

L AS-16E SECTION SCALE: 1:15

NOTES:

1. For structural notes, see sheet AS-1.
2. For cable tray support locations, see electrical plans and dwgs. AS-16K and AS-16R.

REQUEST FOR INFORMATION NOT ADDRESSED IN THIS CCO REMAIN IN FORCE

MARK	DATE	DESCRIPTIONS	BY	CH'D	CCO#
0	02/25/08	CABLE TRAY CHANGES	TW	LMJ	42S1

REVISIONS

CONTRACT CHANGE ORDER NO._____
SHEET _____ OF _____

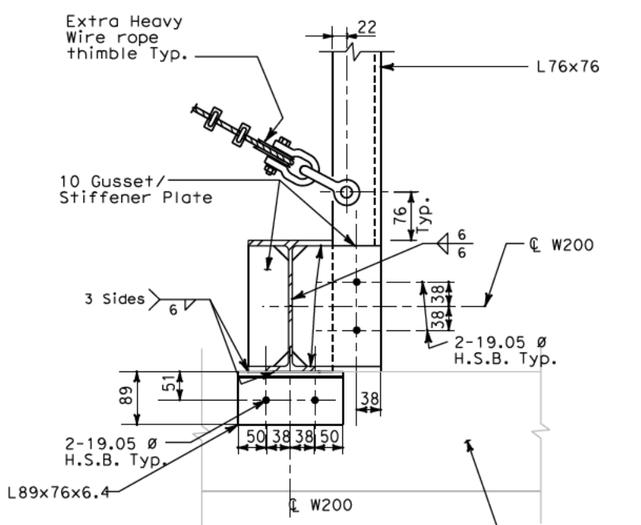

2 AS-16E DETAIL SCALE: 1:5

AS-16F
AS-15G

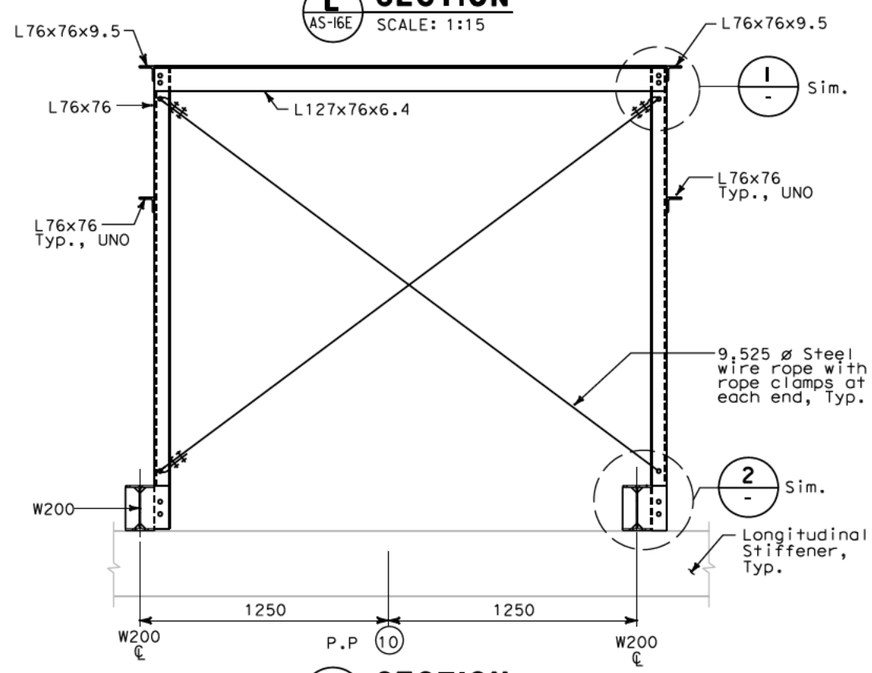

K AS-16E SECTION SCALE: 1:15

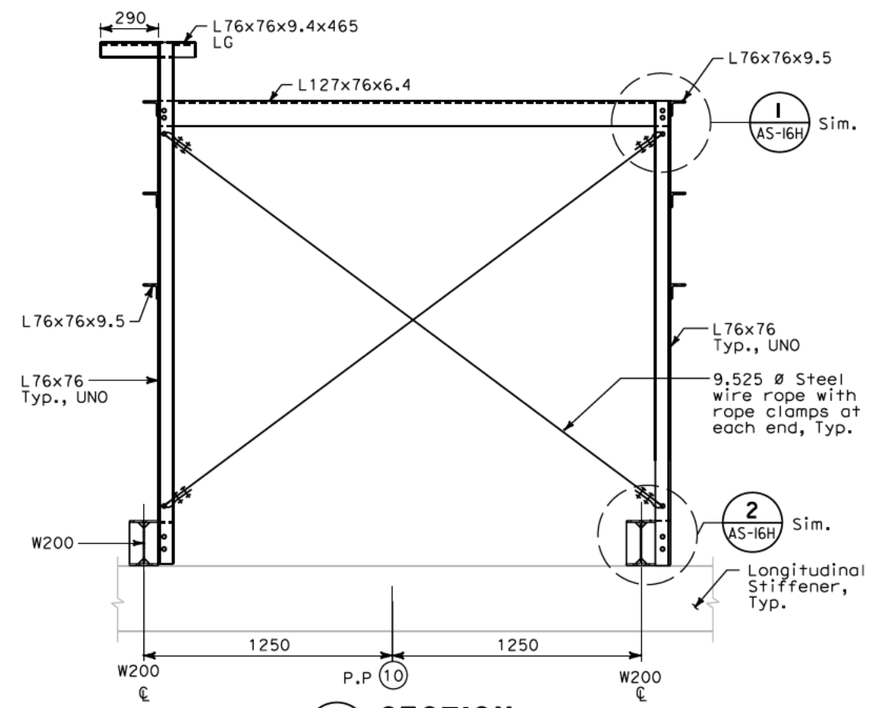

M AS-16E SECTION SCALE: 1:15

ALL DIMENSIONS ARE IN MILLIMETERS UNLESS OTHERWISE SHOWN

Bob Zandipour
DESIGN OVERSIGHT

SIGN OFF DATE

	BY	CHECKED
DESIGN	L. Johnson	M. S. Owyang
DETAILS	A. Antonio	L. Johnson
QUANTITIES	L. Johnson	P. McNamee

PREPARED FOR THE STATE OF CALIFORNIA DEPARTMENT OF TRANSPORTATION

Brady Nadell
PROJECT ENGINEER

BRIDGE NO. 34-0006
KILOMETER POST 13.2/13.9

SAS SUPERSTRUCTURE

EASTBOUND CABLE TRAY SUPPORT DETAILS AT PP 9 AND PP 10 - SHEET 4 OF 4

AS-16H

SHEET 16H OF 16

DISREGARD PRINTS BEARING EARLIER REVISION DATES

REVISION DATES (PRELIMINARY STAGE ONLY)

DESIGN DETAIL SHEET (METRIC) (REV. 3/1/98)

ORIGINAL SCALE IN MILLIMETERS FOR REDUCED PLANS 0 10 20 30 40 50 60 70 80 90 100

CU 04251
EA 0120F1

FILE => T:\13103\MS\pse\SAS Struc\CCO\SAS CCO42S1\CCO 42S1 Final Submittal 2008-07-11\04-0120f1_0086S08.dgn

USERNAME => llorco DATE PLOTTED => 7/11/2008 TIME PLOTTED => 1:53:27 PM

#FREQUEST

DIST	COUNTY	ROUTE	KILOMETER POST TOTAL PROJECT	SHEET No	TOTAL SHEETS
04	SF	80	13.2/13.9	86S9	1204

REGISTERED CIVIL ENGINEER 2/22/08 DATE

PLANS APPROVAL DATE

REGISTERED PROFESSIONAL ENGINEER Mee Shing Owyang No. 24960 Exp. 12/31/09 CIVIL STATE OF CALIFORNIA

The State of California or its officers or agents shall not be responsible for the accuracy or completeness of electronic copies of this plan sheet.

Parsons Brinckerhoff Quade & Douglas, Inc.
303 Second Street, Suite 700N
San Francisco, CA 94107

Caltrans now has a web site! To get to the web site, go to: http://www.dot.ca.gov

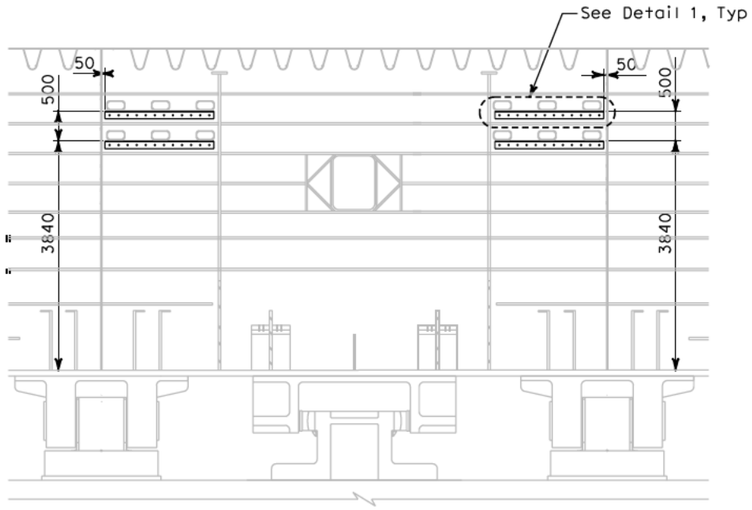

TYPE XI
Side E2 Web Plates
SCALE: 1:50

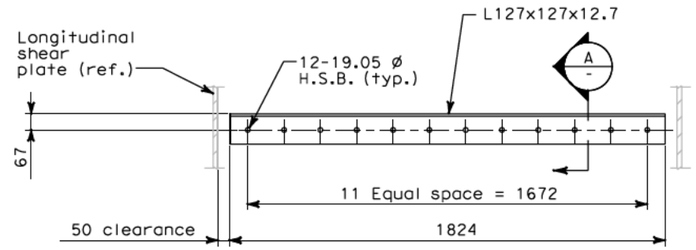

DETAIL 1
NO SCALE

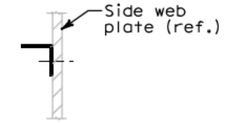

A / - SECTION
NO SCALE

NOTES:

1 For cable tray installation and layout, see sheets E-131 and E-220.

REQUEST FOR INFORMATION NOT ADDRESSED IN THIS CCO REMAIN IN FORCE

MARK	DATE	DESCRIPTIONS	BY	CH'D	CCO#
0	02/25/08	CABLE TRAY CHANGES	TW	MSO	42S1

REVISIONS

CONTRACT CHANGE ORDER NO._____
SHEET _____ OF _____

ALL DIMENSIONS ARE IN MILLIMETERS UNLESS OTHERWISE SHOWN

Bob Zandipour
DESIGN OVERSIGHT

SIGN OFF DATE

	BY	CHECKED
DESIGN	E. Sugiyama	M. S. Owyang
DETAILS	E. Sugiyama	M. S. Owyang
QUANTITIES	E. Sugiyama	M. S. Owyang

PREPARED FOR THE STATE OF CALIFORNIA DEPARTMENT OF TRANSPORTATION

Brady Nadell
PROJECT ENGINEER

BRIDGE NO. 34-0006
KILOMETER POST 13.2/13.9

SAS SUPERSTRUCTURE
CABLE TRAY SUPPORT DETAIL

AS-16J

DESIGN DETAIL SHEET (METRIC) (REV. 3/1/98)

ORIGINAL SCALE IN MILLIMETERS FOR REDUCED PLANS 0 10 20 30 40 50 60 70 80 90 100

CU 04251
EA 0120F1

DISREGARD PRINTS BEARING EARLIER REVISION DATES

REVISION DATES (PRELIMINARY STAGE ONLY)

SHEET 16J OF 16

FILE => T:\13103\MS\pse\SAS Struc\CCO\SAS CCO42S1\CCO 42S1 Final Submittal 2008-07-11\04-0120f1_0086S09.dgn

USERNAME => gorclor DATE PLOTTED => 8/28/2008 TIME PLOTTED => 3:30:51 PM

$$REQUEST

DIST	COUNTY	ROUTE	KILOMETER POST TOTAL PROJECT	SHEET No	TOTAL SHEETS
04	SF	80	13.2/13.9	86 S10	1204

REGISTERED CIVIL ENGINEER 2/22/08 DATE

PLANS APPROVAL DATE

REGISTERED PROFESSIONAL ENGINEER Mee Shing Owyang No. 24960 Exp. 12/31/08 CIVIL STATE OF CALIFORNIA

The State of California or its officers or agents shall not be responsible for the accuracy or completeness of electronic copies of this plan sheet.

Parsons Brinckerhoff Quade & Douglas, Inc.
303 Second Street, Suite 700N
San Francisco, CA 94107

Caltrans now has a web site! To get to the web site, go to: http://www.dot.ca.gov

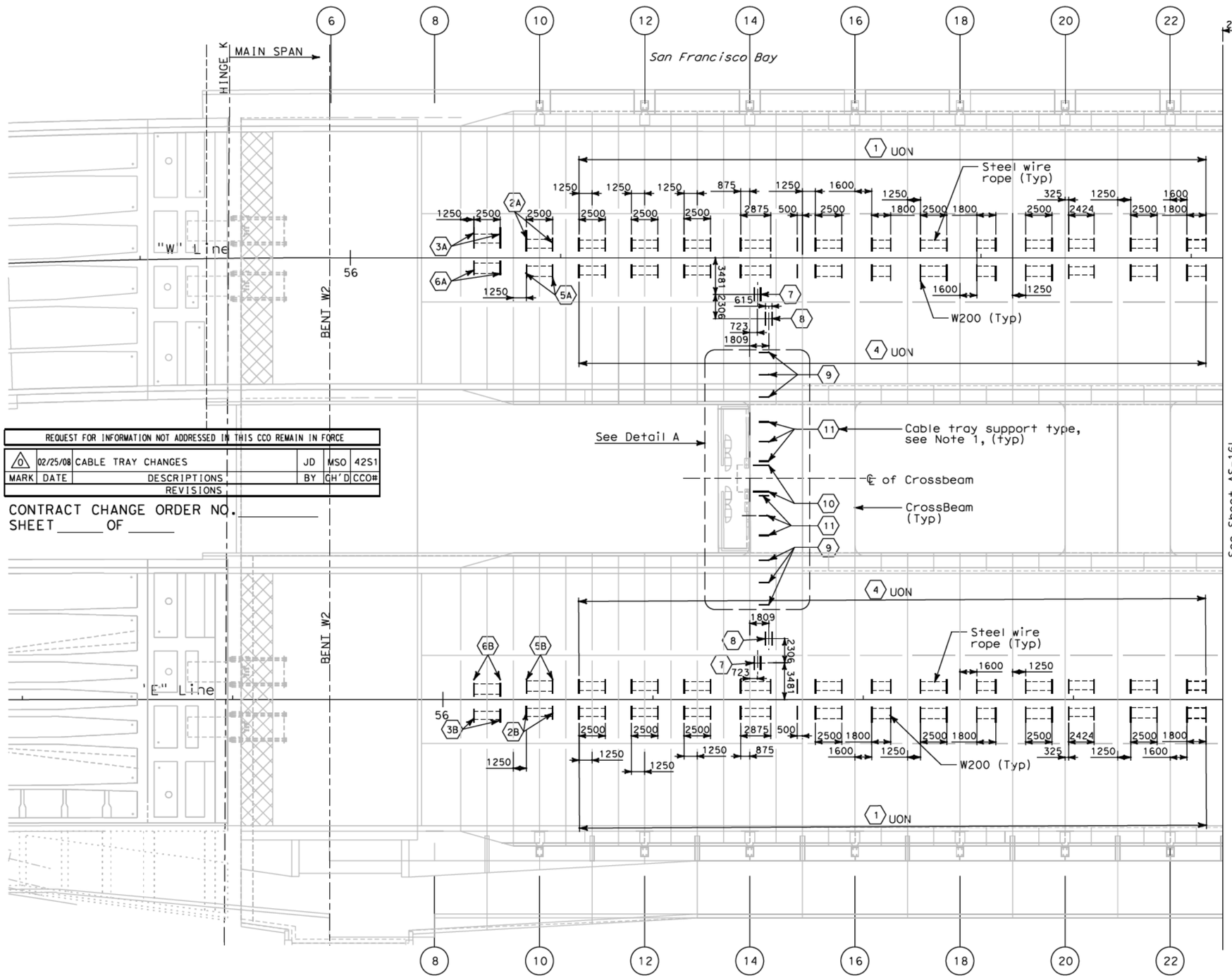

PLAN
SCALE: 1:200

ALL DIMENSIONS ARE IN MILLIMETERS UNLESS OTHERWISE SHOWN

NOTE:

1. For cable tray support type, see Table A sheet AS-16R.

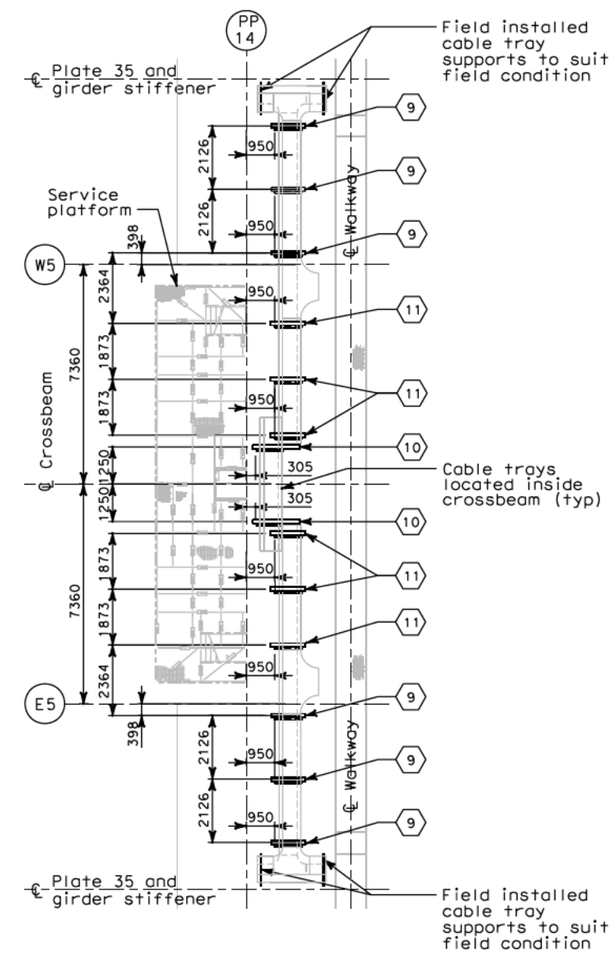

CABLE TRAY SUPPORT INSIDE CROSSBEAM

A DETAIL
SCALE: 1:100

REQUEST FOR INFORMATION NOT ADDRESSED IN THIS CCO REMAIN IN FORCE					
MARK	DATE	DESCRIPTIONS	BY	CH'D	CCO#
0	02/25/08	CABLE TRAY CHANGES	JD	MSO	42S1
		REVISIONS			

CONTRACT CHANGE ORDER NO. _____
SHEET _____ OF _____

Bob Zandipour
DESIGN OVERSIGHT

SIGN OFF DATE

DESIGN DETAIL SHEET (METRIC) (REV. 3/1/98)

	BY	CHECKED
DESIGN	J. Dones	M. S. Owyang
DETAILS	L. Reyes	J. Dones
QUANTITIES	J. Dones	P. Mcnamee

ORIGINAL SCALE IN MILLIMETERS FOR REDUCED PLANS 0 10 20 30 40 50 60 70 80 90 100

PREPARED FOR THE STATE OF CALIFORNIA DEPARTMENT OF TRANSPORTATION

Brady Nadell
PROJECT ENGINEER

CU 04251
EA 0120F1

BRIDGE NO. 34-0006
KILOMETER POST 13.2/13.9

DISREGARD PRINTS BEARING EARLIER REVISION DATES

SAS SUPERSTRUCTURE

OVERALL CABLE TRAY SUPPORT LOCATION PLAN HINGE K TO PP 22 - SHEET 1 OF 6

AS-16K

REVISION DATES (PRELIMINARY STAGE ONLY)

SHEET 16K OF 16

FILE => T:\13103\MS\pse\SAS Struc\CCO\SAS CCO42S1\CCO 42S1 Final Submittal 2008-07-11\04-0120f1_0086S10.dgn

USERNAME => llorico DATE PLOTTED => 7/11/2008 TIME PLOTTED => 11:55:34 PM

#FREQUEST

DIST	COUNTY	ROUTE	KILOMETER POST TOTAL PROJECT	SHEET No	TOTAL SHEETS
04	SF	80	13.2/13.9	86 S11	1204

REGISTERED CIVIL ENGINEER 2/22/08 DATE

PLANS APPROVAL DATE

REGISTERED PROFESSIONAL ENGINEER Mee Shing Owyang No. 24960 Exp. 12/31/08 CIVIL STATE OF CALIFORNIA

The State of California or its officers or agents shall not be responsible for the accuracy or completeness of electronic copies of this plan sheet.

Parsons Brinckerhoff Quade & Douglas, Inc.
303 Second Street, Suite 700N
San Francisco, CA 94107

Caltrans now has a web site! To get to the web site, go to: http://www.dot.ca.gov

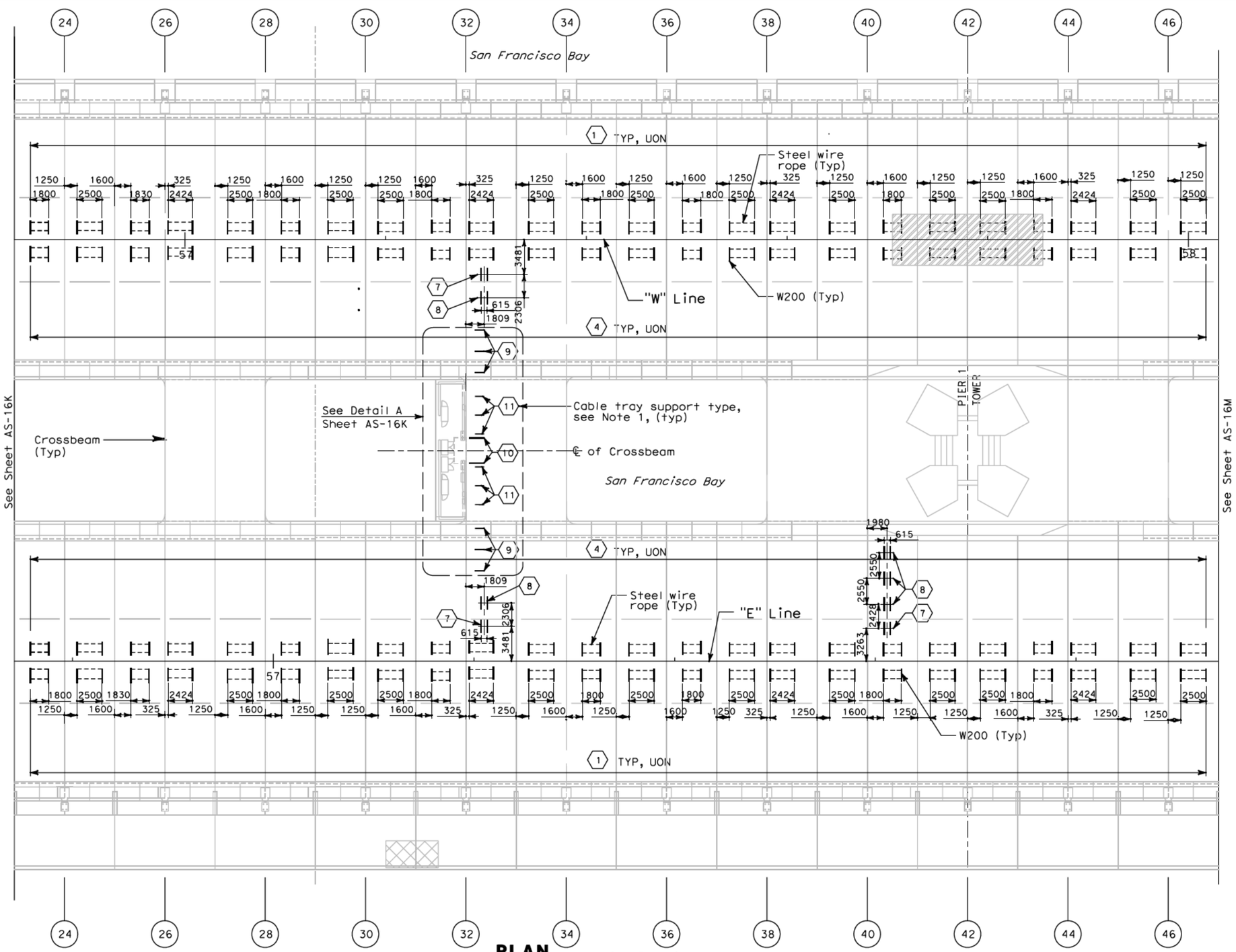

PLAN
SCALE: 1:200

ALL DIMENSIONS ARE IN MILLIMETERS UNLESS OTHERWISE SHOWN

NOTE:

1. For cable tray support type, see Table A sheet AS-16R.

REQUEST FOR INFORMATION NOT ADDRESSED IN THIS CCO REMAIN IN FORCE

MARK	DATE	DESCRIPTIONS	BY	CH'D	CCO#
0	02/25/08	CABLE TRAY CHANGES	JD	MSO	42S1

REVISIONS

CONTRACT CHANGE ORDER NO._____
SHEET _____ OF _____

Bob Zandipour
DESIGN OVERSIGHT

SIGN OFF DATE

DESIGN	BY J. Dones	CHECKED M. S. Owyang
DETAILS	BY L. Reyes	CHECKED J. Dones
QUANTITIES	BY J. Dones	CHECKED P. McNamee

PREPARED FOR THE STATE OF CALIFORNIA DEPARTMENT OF TRANSPORTATION

Brady Nadell
PROJECT ENGINEER

BRIDGE NO. 34-0006
KILOMETER POST 13.2/13.9

SAS SUPERSTRUCTURE

OVERALL CABLE TRAY SUPPORT LOCATION PLAN PP 23 TO PP 46 - SHEET 2 OF 6

AS-16L

DESIGN DETAIL SHEET (METRIC) (REV. 3/1/98)

ORIGINAL SCALE IN MILLIMETERS FOR REDUCED PLANS 0 10 20 30 40 50 60 70 80 90 100

CU 04251
EA 0120F1

DISREGARD PRINTS BEARING EARLIER REVISION DATES

REVISION DATES (PRELIMINARY STAGE ONLY)

SHEET 16L OF 16

FILE => T:\13103\MS\pse\SAS Struc\CCO\SAS CCO42S1\CCO 42S1 Final Submittal 2008-07-11\04-0120f1_0086S11.dgn

USERNAME => jilorrco DATE PLOTTED => 7/11/2008 TIME PLOTTED => 11:56:38 PM

#FREQUEST

DIST	COUNTY	ROUTE	KILOMETER POST TOTAL PROJECT	SHEET No	TOTAL SHEETS
04	SF	80	13.2/13.9	86 S12	1204

REGISTERED CIVIL ENGINEER 2/22/08 DATE

PLANS APPROVAL DATE

REGISTERED PROFESSIONAL ENGINEER Mee Shing Owyang No. 24960 Exp. 12/31/08 CIVIL STATE OF CALIFORNIA

The State of California or its officers or agents shall not be responsible for the accuracy or completeness of electronic copies of this plan sheet.

Parsons Brinckerhoff Quade & Douglas, Inc.
303 Second Street, Suite 700N
San Francisco, CA 94107

Caltrans now has a web site! To get to the web site, go to: http://www.dot.ca.gov

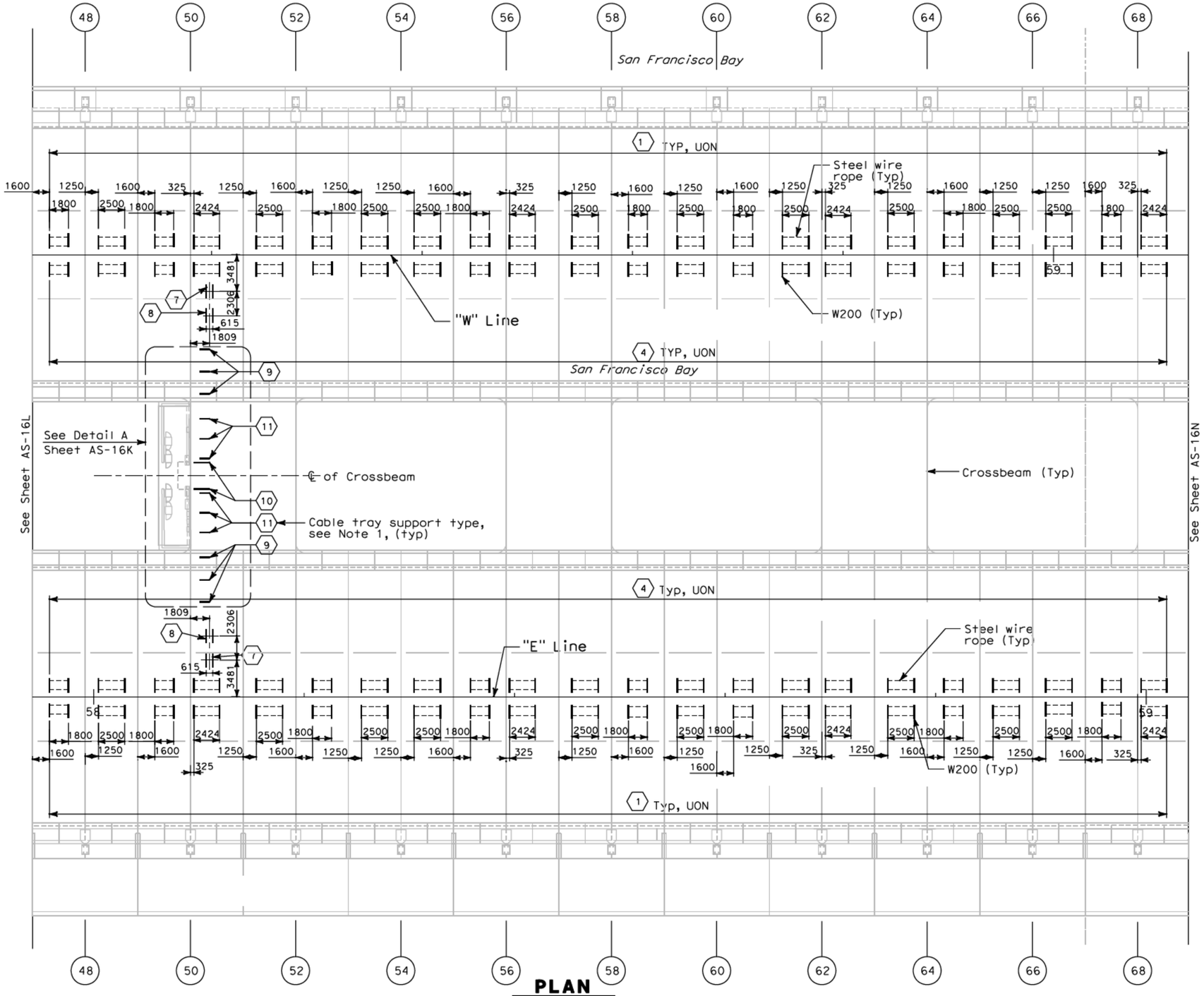

PLAN
SCALE: 1:200

ALL DIMENSIONS ARE IN MILLIMETERS UNLESS OTHERWISE SHOWN

NOTE:

1. For cable tray support type, see Table A sheet AS-16R.

REQUEST FOR INFORMATION NOT ADDRESSED IN THIS CCO REMAIN IN FORCE

MARK	DATE	DESCRIPTIONS	BY	CH'D	CCO#
0	02/25/08	CABLE TRAY CHANGES	JD	MSO	42S1

REVISIONS

CONTRACT CHANGE ORDER NO. _____
SHEET _____ OF _____

Bob Zandipour
DESIGN OVERSIGHT

SIGN OFF DATE

	BY	CHECKED
DESIGN	J. Dones	M. S. Owyang
DETAILS	L. Reyes	J. Dones
QUANTITIES	J. Dones	P. McNamee

PREPARED FOR THE STATE OF CALIFORNIA DEPARTMENT OF TRANSPORTATION

Brady Nadell
PROJECT ENGINEER

BRIDGE NO. 34-0006
KILOMETER POST 13.2/13.9

SAS SUPERSTRUCTURE

OVERALL CABLE TRAY SUPPORT LOCATION PLAN PP 47 TO PP 68 - SHEET 3 OF 6

AS-16M

DESIGN DETAIL SHEET (METRIC) (REV. 3/1/98)

ORIGINAL SCALE IN MILLIMETERS FOR REDUCED PLANS 0 10 20 30 40 50 60 70 80 90 100

CU 04251
EA 0120F1

DISREGARD PRINTS BEARING EARLIER REVISION DATES

REVISION DATES (PRELIMINARY STAGE ONLY)

SHEET 16M OF 16

FILE => T:\13103\MS\pse\SAS Struc\CCO\SAS CCO42S1\CCO 42S1 Final Submittal 2008-07-11\04-0120f1_0086S12.dgn

$FREQUEST

USERNAME => llorico DATE PLOTTED => 7/11/2008 TIME PLOTTED => 1:57:00 PM

DIST	COUNTY	ROUTE	KILOMETER POST TOTAL PROJECT	SHEET No	TOTAL SHEETS
04	SF	80	13.2/13.9	86 S13	1204

REGISTERED CIVIL ENGINEER 2/22/08 DATE

PLANS APPROVAL DATE

REGISTERED PROFESSIONAL ENGINEER Mee Shing Owyang No. 24960 Exp. 12/31/08 CIVIL STATE OF CALIFORNIA

The State of California or its officers or agents shall not be responsible for the accuracy or completeness of electronic copies of this plan sheet.

Parsons Brinckerhoff Quade & Douglas, Inc.
303 Second Street, Suite 700N
San Francisco, CA 94107

Caltrans now has a web site! To get to the web site, go to: http://www.dot.ca.gov

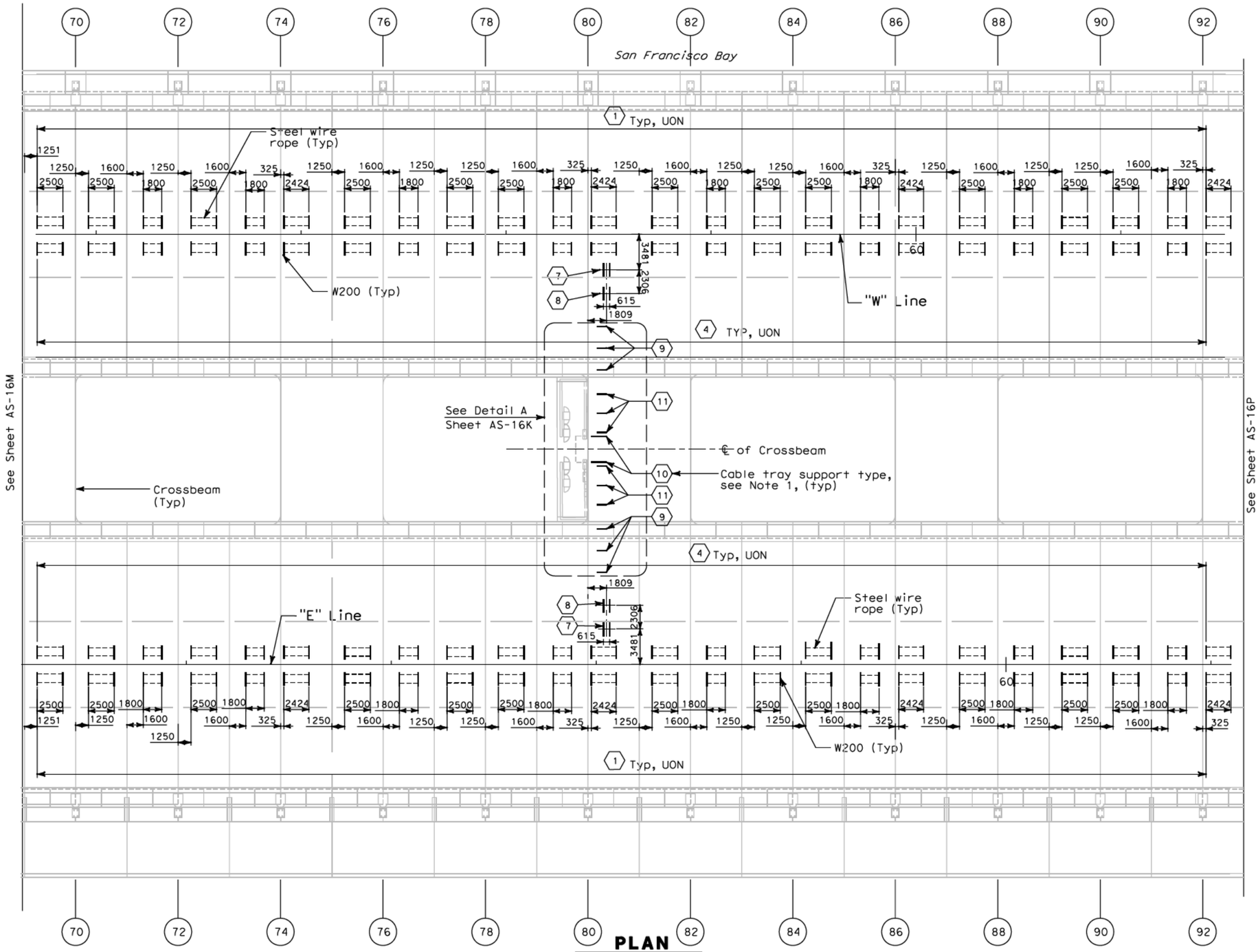

PLAN
SCALE: 1:200

ALL DIMENSIONS ARE IN MILLIMETERS UNLESS OTHERWISE SHOWN

NOTE:

1. For cable tray support type, see Table A sheet AS-16R.

REQUEST FOR INFORMATION NOT ADDRESSED IN THIS CCO REMAIN IN FORCE

MARK	DATE	DESCRIPTIONS	BY	CH'D	CCO#
0	02/25/08	CABLE TRAY CHANGES	JD	MSO	42S1

REVISIONS

CONTRACT CHANGE ORDER NO._____
SHEET _____ OF _____

Bob Zandipour
DESIGN OVERSIGHT

SIGN OFF DATE

	BY	CHECKED
DESIGN	J. Dones	M. S. Owyang
DETAILS	L. Reyes	J. Dones
QUANTITIES	J. Dones	P. McNamee

PREPARED FOR THE STATE OF CALIFORNIA DEPARTMENT OF TRANSPORTATION

Brady Nadell
PROJECT ENGINEER

BRIDGE NO. 34-0006
KILOMETER POST 13.2/13.9

SAS SUPERSTRUCTURE

OVERALL CABLE TRAY SUPPORT LOCATION PLAN PP 69 TO PP 92 - SHEET 4 OF 6

AS-16N

DESIGN DETAIL SHEET (METRIC) (REV. 3/1/98)

ORIGINAL SCALE IN MILLIMETERS FOR REDUCED PLANS 0 10 20 30 40 50 60 70 80 90 100

CU 04251
EA 0120F1

DISREGARD PRINTS BEARING EARLIER REVISION DATES

REVISION DATES (PRELIMINARY STAGE ONLY)

SHEET 16N OF 16

FILE => T:\13103\MS\pse\SAS Struc\CCO\SAS CCO42S1\CCO 42S1 Final Submittal 2008-07-11\04-0120f1_0086S13.dgn

USERNAME => llorrco DATE PLOTTED => 7/11/2008 TIME PLOTTED => 1:57:22 PM

#FREQUEST

DIST	COUNTY	ROUTE	KILOMETER POST TOTAL PROJECT	SHEET No	TOTAL SHEETS
04	SF	80	13.2/13.9	86 S14	1204

REGISTERED CIVIL ENGINEER 2/22/08 DATE

PLANS APPROVAL DATE

REGISTERED PROFESSIONAL ENGINEER Mee Shing Owyang No. 24960 Exp. 12/31/08 CIVIL STATE OF CALIFORNIA

The State of California or its officers or agents shall not be responsible for the accuracy or completeness of electronic copies of this plan sheet.

Parsons Brinckerhoff Quade & Douglas, Inc.
303 Second Street, Suite 700N
San Francisco, CA 94107

Caltrans now has a web site! To get to the web site, go to: http://www.dot.ca.gov

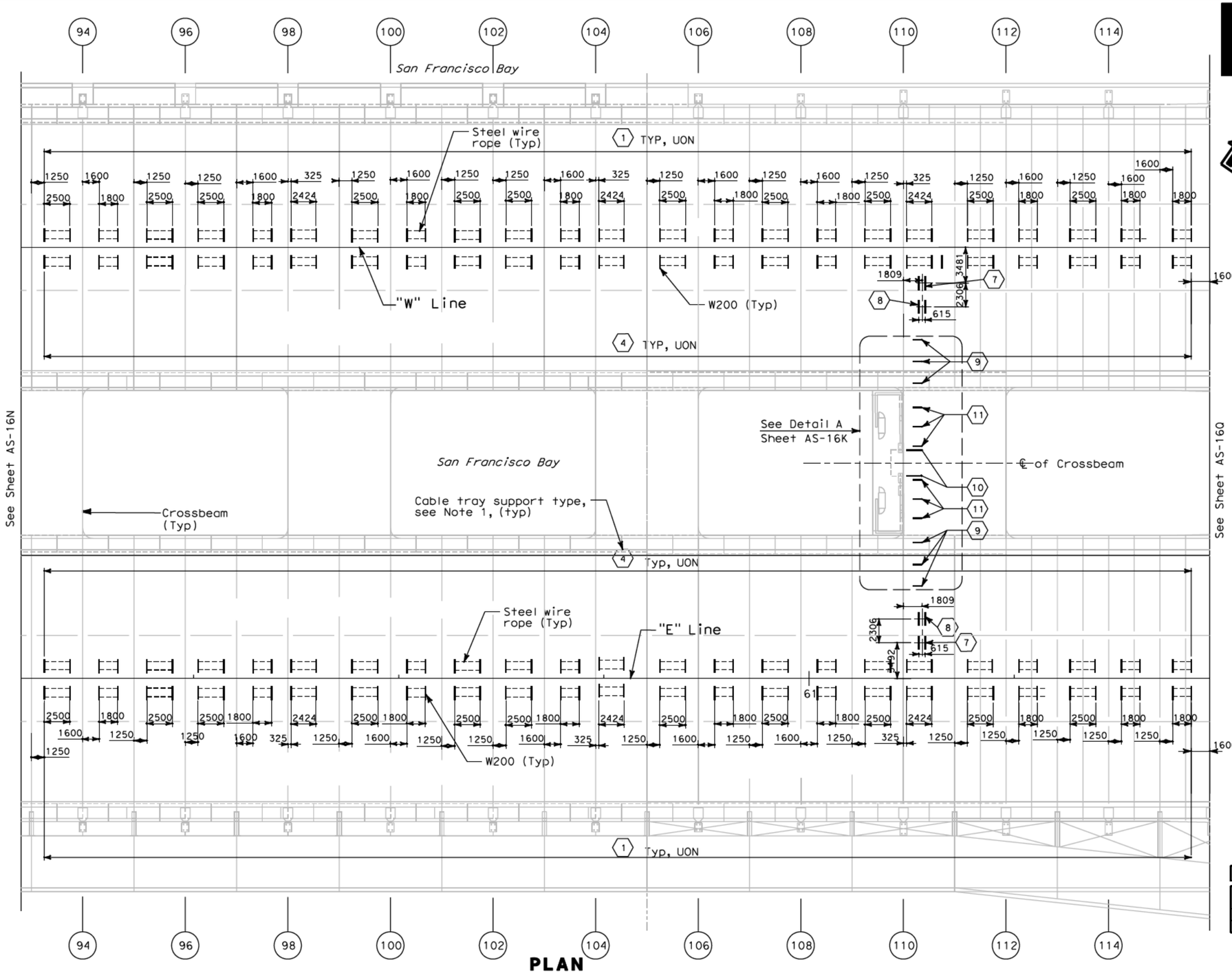

PLAN
SCALE: 1:200

ALL DIMENSIONS ARE IN MILLIMETERS UNLESS OTHERWISE SHOWN

NOTE:

1. For cable tray support type, see Table A sheet AS-16R.

REQUEST FOR INFORMATION NOT ADDRESSED IN THIS CCO REMAIN IN FORCE

MARK	DATE	DESCRIPTIONS	BY	CH'D	CCO#
0	02/25/08	CABLE TRAY CHANGES	JD	MSO	42S1

REVISIONS

CONTRACT CHANGE ORDER NO._____
SHEET _____ OF _____

Bob Zandipour
DESIGN OVERSIGHT

SIGN OFF DATE

DESIGN	BY D. Dones	CHECKED M. S. Owyang
DETAILS	BY L. Reyes	CHECKED J. Dones
QUANTITIES	BY J. Dones	CHECKED P. McNamee

PREPARED FOR THE STATE OF CALIFORNIA DEPARTMENT OF TRANSPORTATION

Brady Nadell
PROJECT ENGINEER

BRIDGE NO. 34-0006
KILOMETER POST 13.2/13.9

SAS SUPERSTRUCTURE

OVERALL CABLE TRAY SUPPORT LOCATION PLAN PP 93 TO PP 115 - SHEET 5 OF 6

AS-16P

DESIGN DETAIL SHEET (METRIC) (REV. 3/1/98)

ORIGINAL SCALE IN MILLIMETERS FOR REDUCED PLANS 0 10 20 30 40 50 60 70 80 90 100

CU 04251
EA 0120F1

DISREGARD PRINTS BEARING EARLIER REVISION DATES

REVISION DATES (PRELIMINARY STAGE ONLY)

SHEET 16P OF 16

FILE => T:\13103\MS\pse\SAS Struc\CCO\SAS CCO42S1\CCO 42S1 Final Submittal 2008-07-11\04-0120f1_0086S14.dgn

USERNAME => llorico DATE PLOTTED => 7/11/2008 TIME PLOTTED => 1:57:44 PM

$FREQUEST

DIST	COUNTY	ROUTE	KILOMETER POST TOTAL PROJECT	SHEET No	TOTAL SHEETS
04	SF	80	13.2/13.9	86 S15	1204

REGISTERED CIVIL ENGINEER 2/22/08 DATE

PLANS APPROVAL DATE

REGISTERED PROFESSIONAL ENGINEER Mee Shing Owyang No. 24960 Exp. 12/31/08 CIVIL STATE OF CALIFORNIA

The State of California or its officers or agents shall not be responsible for the accuracy or completeness of electronic copies of this plan sheet.

Parsons Brinckerhoff Quade & Douglas, Inc.
303 Second Street, Suite 700N
San Francisco, CA 94107

Caltrans now has a web site! To get to the web site, go to: http://www.dot.ca.gov

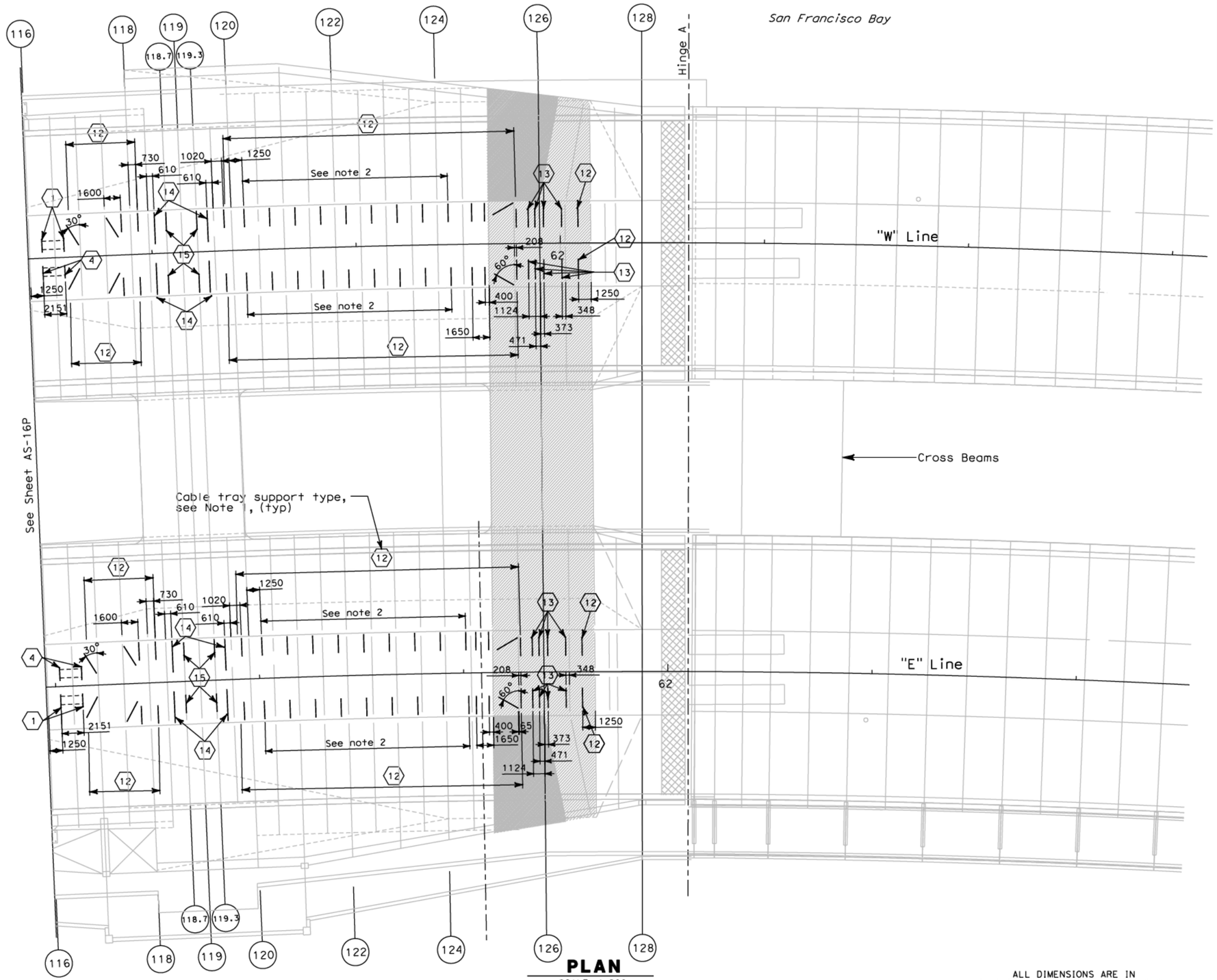

PLAN

SCALE: 1:200

ALL DIMENSIONS ARE IN MILLIMETERS UNLESS OTHERWISE SHOWN

NOTES:

1. For cable tray support type, see Table A sheet AS-16R.
2. Center one cable tray support in each space between floor beams.

REQUEST FOR INFORMATION NOT ADDRESSED IN THIS CCO REMAIN IN FORCE

MARK	DATE	DESCRIPTIONS	BY	CH'D	CCO#
0	02/25/08	CABLE TRAY CHANGES	JD	MSO	42S1

REVISIONS

CONTRACT CHANGE ORDER NO._____
SHEET_____ OF _____

Bob Zandipour
DESIGN OVERSIGHT

SIGN OFF DATE

DESIGN DETAIL SHEET (METRIC) (REV. 3/1/98)

	BY	CHECKED
DESIGN	J. Dones	M. S. Owyang
DETAILS	L. Reyes	J. Dones
QUANTITIES	J. Dones	P. McNamee

PREPARED FOR THE STATE OF CALIFORNIA DEPARTMENT OF TRANSPORTATION

Brady Nadell
PROJECT ENGINEER

BRIDGE NO. 34-0006
KILOMETER POST 13.2/13.9

SAS SUPERSTRUCTURE

OVERALL CABLE TRAY SUPPORT LOCATION PLAN PP 93 TO HINGE A - SHEET 6 OF 6

AS-16Q

ORIGINAL SCALE IN MILLIMETERS FOR REDUCED PLANS 0 10 20 30 40 50 60 70 80 90 100

CU 04251
EA 0120F1

DISREGARD PRINTS BEARING EARLIER REVISION DATES

REVISION DATES (PRELIMINARY STAGE ONLY)

SHEET 16Q OF 16

FILE => T:\13103\MS\pse\SAS Struc\CCO\SAS CCO42S1\CCO 42S1 Final Submittal 2008-07-11\04-0120f1_0086S15.dgn

USERNAME => llorico DATE PLOTTED => 7/11/2008 TIME PLOTTED => 11:58:06 PM

#REQUEST

DIST	COUNTY	ROUTE	KILOMETER POST TOTAL PROJECT	SHEET No	TOTAL SHEETS
04	SF	80	13.2/13.9	86 S16	1204

REGISTERED CIVIL ENGINEER 2/22/08 DATE

PLANS APPROVAL DATE

REGISTERED PROFESSIONAL ENGINEER Mee Shing Owyang No. 24960 Exp. 12/31/08 CIVIL STATE OF CALIFORNIA

The State of California or its officers or agents shall not be responsible for the accuracy or completeness of electronic copies of this plan sheet.

Parsons Brinckerhoff Quade & Douglas, Inc.
303 Second Street, Suite 700N
San Francisco, CA 94107

Caltrans now has a web site! To get to the web site, go to: http://www.dot.ca.gov

Caltrans Metric

TABLE A

ITEM	DESCRIPTION	DETAIL SHEET	REMARKS
1	TYPE I	AS-11	
2A	TYPE I MODIFIED	AS-16A/SECTION A AS-16B/SECTION C AS-16C/SECTION H AS-16D/SECTION L	WESTBOUND
2B	TYPE I MODIFIED	AS-16F/SECTION C AS-16G/SECTION G AS-16H/SECTION K AS-16H/SECTION L	EASTBOUND
3A		AS-16A/SECTION A AS-16B/SECTION E AS-16C/SECTION F AS-16D/SECTION K	
3B	TYPE I MODIFIED	AS-16E/SECTION B AS-16F/SECTION D AS-16G/SECTION H AS-16G/SECTION J	EASTBOUND
4	TYPE II	AS-11	
5A	TYPE II MODIFIED	AS-16B/SECTION D AS-16B/SECTION C AS-16C/SECTION H AS-16D/SECTION J	WESTBOUND
5B	TYPE II MODIFIED	AS-16F/SECTION C AS-16G/SECTION F AS-16G/SECTION G AS-16H/SECTION M	EASTBOUND
6A	TYPE II MODIFIED	AS-16A/SECTION B AS-16B/SECTION E AS-16C/SECTION F AS-16C/SECTION G	WESTBOUND
6B	TYPE II MODIFIED	AS-16E/SECTION A AS-16F/SECTION D AS-16F/SECTION E AS-16G/SECTION H	EASTBOUND
7	TYPE V	AS-14	
8	TYPE VI	AS-14	
9	TYPE VII	AS-15	
10	TYPE VIIA	AS-15	
11	TYPE VIIB	AS-15	
12	TYPE VIII	AS-15	
13	TYPE IX	AS-15	
14	TYPE X	AS-16	
15	TYPE XI	AS-16J	

REQUEST FOR INFORMATION NOT ADDRESSED IN THIS CCO REMAIN IN FORCE

MARK	DATE	DESCRIPTIONS	BY	CH'D	CCO#
0	02/25/08	CABLE TRAY CHANGES	JD	MSO	42S1

REVISIONS

CONTRACT CHANGE ORDER NO._____
SHEET _____ OF _____

ALL DIMENSIONS ARE IN MILLIMETERS UNLESS OTHERWISE SHOWN

Bob Zandipour
DESIGN OVERSIGHT

SIGN OFF DATE

	BY	CHECKED
DESIGN	J. Dones	M. S. Owyang
DETAILS		
QUANTITIES		

PREPARED FOR THE STATE OF CALIFORNIA DEPARTMENT OF TRANSPORTATION

Brady Nadell
PROJECT ENGINEER

BRIDGE NO. 34-0006
KILOMETER POST 13.2/13.9

SAS SUPERSTRUCTURE

OVERALL CABLE TRAY SUPPORT LOCATIONS TABLE A

AS-16R

DISREGARD PRINTS BEARING EARLIER REVISION DATES

REVISION DATES (PRELIMINARY STAGE ONLY)

SHEET 16R OF 16

DESIGN DETAIL SHEET (METRIC) (REV. 3/1/98)

ORIGINAL SCALE IN MILLIMETERS FOR REDUCED PLANS 0 10 20 30 40 50 60 70 80 90 100

CU 04251
EA 0120F1

FILE => T:\13103\MS\pse\SAS Struc\CCO\SAS CCO42S1\CCO 42S1 Final Submittal 2008-07-11\04-0120f1_0086S16.dgn

USERNAME => ilorfco DATE PLOTTED => 7/11/2008 TIME PLOTTED => 1:58:40 PM

$FREQUEST

DIST	COUNTY	ROUTE	KILOMETER POST TOTAL PROJECT	SHEET No	TOTAL SHEETS
04	SF	80	13.2/13.9	93R2	1204

REGISTERED ELECTRICAL ENGINEER 12/19/02 DATE

12-6-04
PLANS APPROVAL DATE

REGISTERED PROFESSIONAL ENGINEER JENS ERLINGSSON No. 8249 Exp. 9/30/06 ELECTRICAL STATE OF CALIFORNIA

PB POWER, Inc.
A Parsons Brinckerhoff Company
303 Second St., Suite 700N
San Francisco, CA 94107-1317

The State of California or its officers or agents shall not be responsible for the accuracy or completeness of electronic copies of this plan sheet.

Caltrans now has a web site! To get to the web site, go to http://www.dot.ca.gov

Caltrans Metric

REGISTERED PROFESSIONAL ENGINEER S. A. ESTOQUE, JR. No. E-10151 Exp. 12/31/2008 ELECTRICAL STATE OF CALIFORNIA

FOR REVISION ONLY

REQUEST FOR INFORMATION NOT ADDRESSED IN THIS CCO REMAIN IN FORCE

MARK	DATE	DESCRIPTIONS	BY	CH'D	CCO#
2	02/25/08	CABLE TRAY CHANGES	RG	SE	42S1
1	02/19/08	ELECTRICAL MODIFICATIONS	MP EL	RR	42

REVISIONS

CONTRACT CHANGE ORDER NO._____
SHEET _____ OF _____

TRAFFIC OPERATIONS SYSTEMS (TOS)

AVO	Analog Video Output
CCR	Camera Control Receiver
CCU	Camera Control Unit
CIA	Controller Interface Assembly
COMM	Communication
FDU	Fiber Distribution Unit
F/O	Fiber Optic
FODM	Fiber Optic Data Modem
FDC	Fiber Optic Drop Cable
FPC	Fiber Optic Pigtail Cable
FSC	Fiber Splice Closure
FTC	Fiber Optic Trunkline Cable
IF	Input File
MVDS	Microwave Vehicle Detection Sensor
PDA	Power Distribution Assembly
PL	Preformed Loop Detection Station
SCA	Serial Cable Assembly
SMFO	Single Mode Fiber Optic
TB	Terminal Box
TSC	Trunkline Splice Closure
TVCP	CCTV Camera Control Power Cable
TVC	CCTV Camera Control Cable
TVL	CCTV Camera Video Cable
TVP	CCTV Camera Power Cable
VTDD	Video Transmitter Duplex Data

PROJECT NOTES

1. 27C, 2#12 + #12 G.
2. 27C, 2#10 + #10 G.
3. 27C, 4#10 + #10 G.
4. 27C, 3#10 + #10 G.
5. 27C (Type 4), 2#12 + #12 G.
6. 27C (Type 4), 2#10 + #10 G.
7. 41C, 2-6 pairs #18, IS/OA.
8. 78C, 50 Pairs #18, IS/OA.
9. 27C, 3/C #6 + #8G.
10. 21C, 2-1 pair #18 (for Call Box signal) shielded pairs and overall shield.
11. 21C, 3#12 (for Call Box power).
12. 21C, (4) 1 pair #18 (for Call Box signal). Part of (2) 1-2 pairs #18, shielded pairs and overall shield.
13. 78C, 2#2 + #6 G and 2#10 + #10 G (for CMS Power).
14. 78C, Harness #4 and Harness #5 (for CMS Signal).
15. 41C, Cable type TVP and TVCP (for CCTV Power).
16. 41C, Cable type TVC and TVL (for CCTV Control Signal).
18. 41C, Cable type MVDS DLC (for MVDS Signal).
20. 78C, Cable type 10 DLC (for Preformed Loop Signal).
21. 27C (Flexible Conduit) 6#10 + #10 G.
22. 27C (Flexible Conduit) 3#10 + #10 G.
23. 27C, 7#10 + #10 G.
24. 27C, 6#10 + #10 G.

PROJECT NOTES (Continuation)

25. 27C, 7#10 + #10 G.
26. 41C, 3#6 + #8 G.
27. 41C, 3#8 + #10 G.
28. 21C, PVC coated - 2#10 + #10 G.
29. 21C, PVC coated, 3#12 (for Call Box Power).
30. 500 kcmil Bare Copper Wire.
31. 250 kcmil Bare Copper Wire.
32. #4/0 Bare Copper Wire.
33. #2 Bare Copper Wire.
34. 41C, 3#6 + #8 G, 3#8 + #10 G.
35. 41C, 6#8 + #10 G.
36. 21C, PVC coated, 1-2 pairs #18 (For Call Box signal).
37. Metal clad type cable with PVC overall jacket 3/C #10 (for Bike Path lighting).
38. Metal clad type cable with PVC overall jacket 1-2 pairs #18, shielded pairs and overall shield (for Call Box signal).
39. Metal clad type cable with PVC overall jacket 3/C #12 (for Call Box signal).
40. 78C, Cable Type A Fiber Optic.
41. 21C, (Flexible Conduit) 2#10 + 10 G.
42. 27C, 2#12 + #12G, 2#10 + #10G.
43. 21C, (Flexible conduit) 2#12 + 12 G.
44. 41C, 2#12 + #12 G, 6#10 + #10 G.
45. 27C, 2#12 + #12 G, 4#10 + #10 G.
46. 27C, Liquidtight flexible metal conduit, 4#10 + #10G.
47. 41C, Liquidtight flexible metal conduit, (MVDS DLC).
48. 27C, 3#6 + #8G. Liquidtight flexible metal conduit.

GENERAL NOTES

1. Conduit routing is diagrammatic. Pull box locations shall be located as shown on plan drawings. The Contractor shall provide additional pull boxes as required. Exact locations of equipment and devices may be adjusted depending on field conditions or by the Engineer.
2. Minimum size of conduits shall be 21 mm. Exposed conduits shall be PVC coated rigid galvanized steel, and conduits located inside girder shall be rigid galvanized steel.
3. Conduit fittings for 78 mm conduits and larger shall have a 610 mm minimum bending radius.
4. All conduits, including spares, shall be provided with pull wires prior to cable installations.
5. All equipment and devices shall be provided with nameplate tags per drawings.
6. All feeders and branch circuits shall be provided with ground wire.
7. 15 kV splice boxes shall be installed as shown and permanently marked "DANGER-HIGH VOLTAGE-KEEP OUT". The letters shall be block type and at least 50 mm in height.
8. The Contractor shall label all conductors and cables per wiring diagrams.
9. Padlocks shall be installed on all cabinets located on the platforms to prevent unauthorized access.
10. Call boxes will be State-furnished. (The Contractor shall install and terminate conductors per wiring diagram.
11. Ladder type cable trays shall be installed for each 15 kV and 600 V systems.
12. Solid bottom cable trays shall be installed for each low level signals, CALTRANS communications, fiber optic systems, and for Non-Caltrans utilities.
13. For Strong Motion Detection System general notes, see sheet E-361.
14. All E sheets are accurate for electrical work only.
15. All dimensions are in millimeters unless otherwise shown.
16. All unused conductors inside pull boxes shall be taped and coiled.
17. "Similar" when shown on the plans means this detail is applicable to different structure and conduit sizes.
18. Electrical fixtures shall not be field welded to the box girders or crossbeams. All welding to the box girders and crossbeams shall be shown on the box girder and crossbeam shop drawings for review and approval by the Engineer.
19. All welding of electrical fixtures to the tower shall be shown on the tower shop drawings for review and approval by the Engineer.
20. All connections to steel elements of the self-anchored suspension bridge superstructure of electrical equipment and fixtures, including conduits, pull boxes, lighting fixtures, messenger cables and others, shall be shop welded or bolted. All connection details shall appear on the working drawings for review and approval by the Engineer.
21. Prior to ordering any cable tray support structures, the Contractor shall:
    - Refer to Structural sheets to determine the locations of cable tray support structures.
    - Determine, based upon field conditions, when and where to use cable tray vertical or horizontal bends, horizontal tees or reducers.
    - Refer to AS-sheets to determine the type of cable tray support to use based on field conditions.
    - Cable tray support structures shown on the AS-sheets are generic and may have to be adapted to suit field conditions.
    - All modifications to the cable tray support structures as shown on the AS-sheets shall be approved by the Resident Engineer.
22. All installation of electrical conduit, equipment or pull boxes shall be either shop welded or bolted.
23. (2) All cable trays shall be securely anchored to support. Appropriate type of anchors (hold down brackets, hold down clamps or guides) shall be used to suit the cable tray type, location and supports. For similar attachment details, see TYPE I & II on E-122A and E-205A.

ELECTRICAL NOTES AND ABBREVIATIONS

E-8

STATE OF CALIFORNIA - DEPARTMENT OF TRANSPORTATION
Caltrans

DESIGN OVERSIGHT
BEHZAD GOLEMOHAMMADI

CALCULATED/ DESIGNED BY	AB	DATE 08/02	REVISED BY	IAH	3/04
CHECKED BY	JW	09/02	DATE REVISED		

LAST REVISION 00-00-00
DATE PLOTTED => 7/11/2008
TIME PLOTTED => 1:59:32 PM

FOR REDUCED PLANS ORIGINAL SCALE IS IN MILLIMETERS 0 20 40 60 80

DGN FILE =>T:\13103\MS\pse\SAS Struc\CCO\SAS CCO42S1\CCO 42S1 Final Submittal 2008-07-11\04-0120f1_0093R02.dgn
USERNAME =>llorico

CU 04251 EA 0120F1

DIST	COUNTY	ROUTE	KILOMETER POST TOTAL PROJECT	SHEET No	TOTAL SHEETS
04	SF	80	13.2/13.9	103 R1	1204

Jens Erlingsson 12/19/02
REGISTERED ELECTRICAL ENGINEER DATE

12-6-04
PLANS APPROVAL DATE

REGISTERED PROFESSIONAL ENGINEER JENS ERLINGSSON No. 8249 Exp. 9/30/06 ELECTRICAL STATE OF CALIFORNIA

PB POWER, Inc.
A Parsons Brinckerhoff Company
303 Second St., Suite 700N
San Francisco, CA 94107-1317

The State of California or its officers or agents shall not be responsible for the accuracy or completeness of electronic copies of this plan sheet.

Caltrans now has a web site! To get to the web site, go to http://www.dot.ca.gov

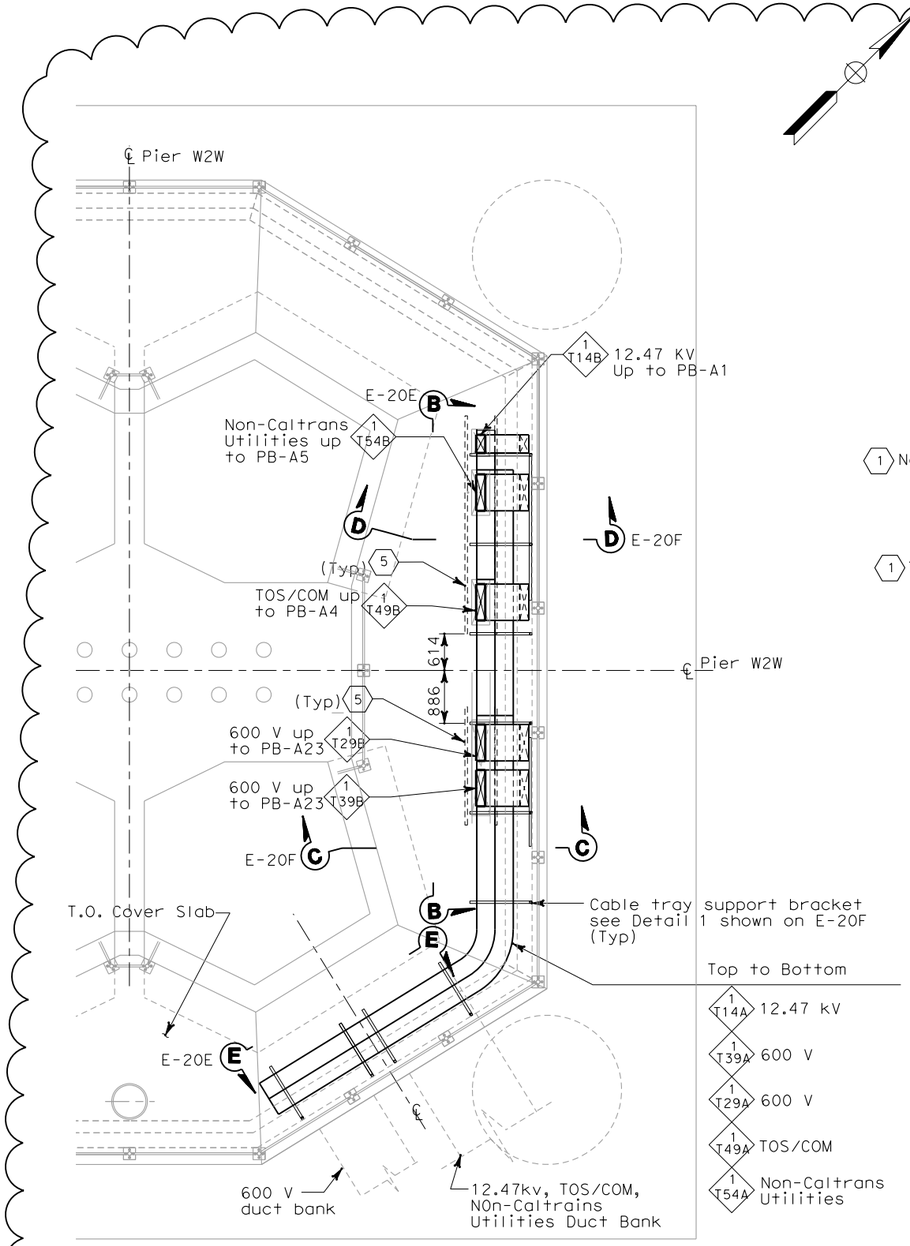

PLAN AT BELOW COVER PIER W2W

SCALE: 1:20

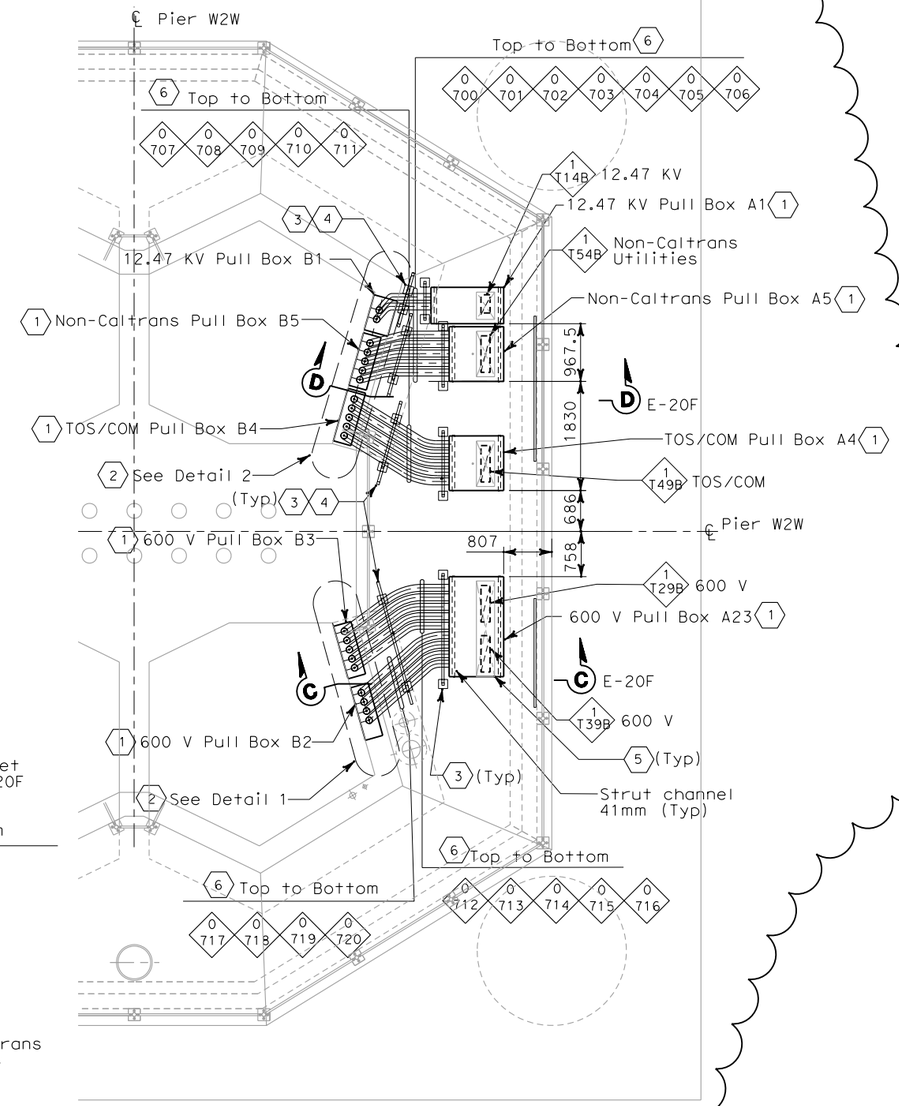

PLAN AT GRADE PIER W2W

SCALE: 1:20

NOTES:

1. References:
   - For duct bank and manhole plan, see sheet E-11.
   - For duct bank section, see sheet E-19.
   - For circuit and conduit/cable tray schedules, see sheets starting at E-401.
   - For foundation grounding, see sheet E-22.
   - For grounding interface, see sheet E-18.
   - For SAS Superstructure girder westbound grounding plan, see sheets E-111 and E-18.
   - For duct bank elevations at W2W, see sheet E-23.

SHEET NOTES:

1. For pull box sizes, opening and type see sheet E-20C.
2. For Details 1 and 2 see sheet E-20B.
3. For conduit support details see sheet E-20D.
4. Do not secure liquid tight metal flexible conduit at this support location.
5. For embedded strut channel and cable tray opening locations at pier W2 cover slab see E-20E.
6. Length of flexible conduits shall be provided for seismic movement. The maximum expansion displacement is 400mm.

REGISTERED PROFESSIONAL ENGINEER S. A. ESTOQUE, JR. No. E-10151 Exp. 12/31/2008 ELECTRICAL STATE OF CALIFORNIA

FOR REVISION ONLY

REQUEST FOR INFORMATION NOT ADDRESSED IN THIS CCO REMAIN IN FORCE

MARK	DATE	DESCRIPTIONS	BY	CH'D	CCO#
1	02/25/08	CABLE TRAY CHANGES	TW	RG SE	42S1

REVISIONS

CONTRACT CHANGE ORDER NO._____
SHEET _____ OF _____

DETAILS
UNDERGROUND
PIER W2W PLAN AND SECTIONS

SCALE AS NOTED

E-20

REVISED BY	DATE REVISED
IAH	02/07
AB	02/07

CALCULATED/DESIGNED BY
CHECKED BY

DESIGN OVERSIGHT
BEHZAD GOLEMOHAMMADI

STATE OF CALIFORNIA - DEPARTMENT OF TRANSPORTATION
Caltrans

THIS PLAN IS ACCURATE FOR ELECTRICAL WORK ONLY.

ALL DIMENSIONS ARE IN MILLIMETERS UNLESS OTHERWISE SHOWN.

FOR REDUCED PLANS ORIGINAL SCALE IS IN MILLIMETERS 0 20 40 60 80

DGN FILE =>T:\13103\MS\pse\SAS Struc\CCO\SAS CCO42S1\CCO 42S1 Final Submittal 2008-07-11\04-0120f1_0103R01.dgn
USERNAME =>llorico

CU 04251 | EA 0120F1

LAST REVISION 00-00-00
DATE PLOTTED => 7/11/2008
TIME PLOTTED => 2:01:29 PM

DIST	COUNTY	ROUTE	KILOMETER POST TOTAL PROJECT	SHEET No	TOTAL SHEETS
04	SF	80	13.2/13.9	103 S1	1204

REGISTERED ELECTRICAL ENGINEER — DATE 2/22/08

REGISTERED PROFESSIONAL ENGINEER S. A. ESTOQUE, JR. No. E-10151 Exp. 12/31/2008 ELECTRICAL STATE OF CALIFORNIA

PLANS APPROVAL DATE

PB AMERICAS, Inc.
A Parsons Brinckerhoff Company
303 Second St., Suite 700N
San Francisco, CA 94107-1317

The State of California or its officers or agents shall not be responsible for the accuracy or completeness of electronic copies of this plan sheet.

Caltrans now has a web site! To get to the web site, go to http://www.dot.ca.gov

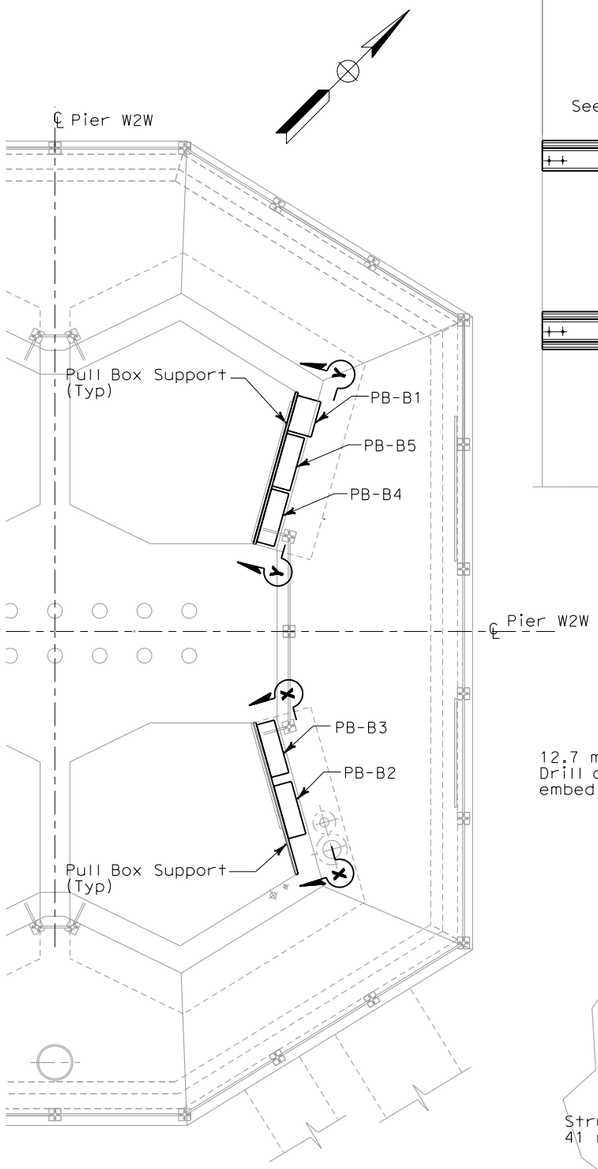

PLAN AT PIER W2W

PULL BOX MOUNTING AT FACE OF COLUMN
SCALE: 1:20

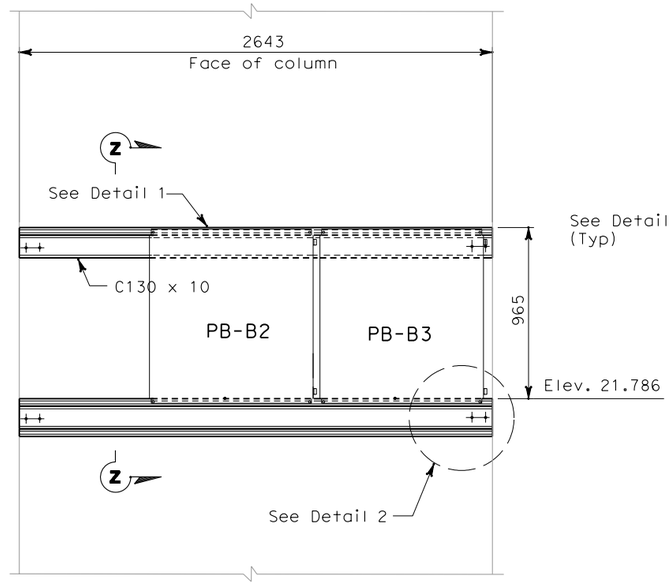

SECTION X-X (1)

PULL BOX SUPPORT
NO SCALE

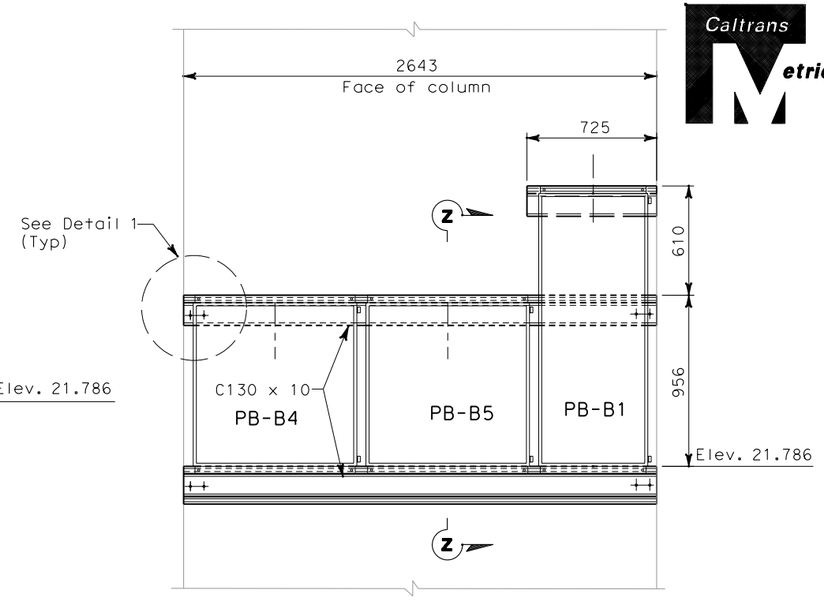

SECTION Y-Y (1)

PULL BOX SUPPORT
NO SCALE

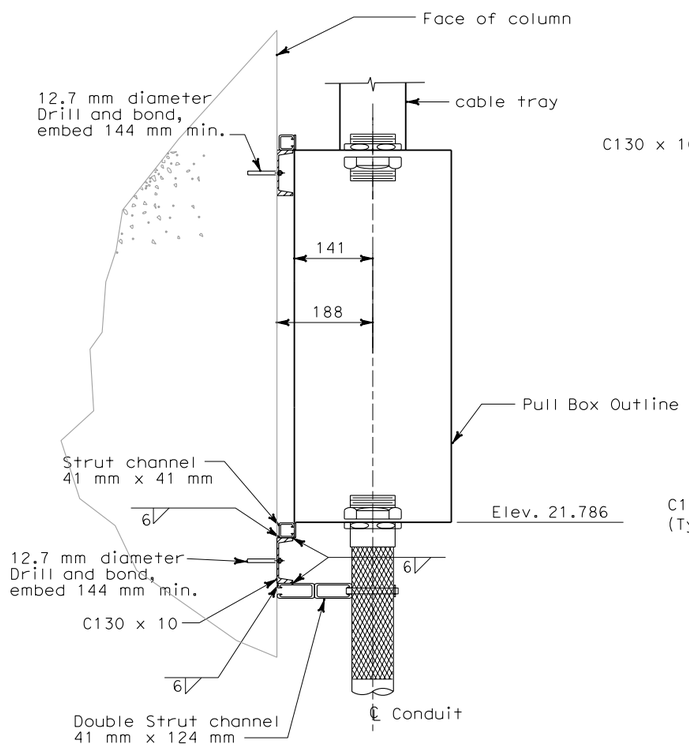

SECTION Z-Z

NO SCALE

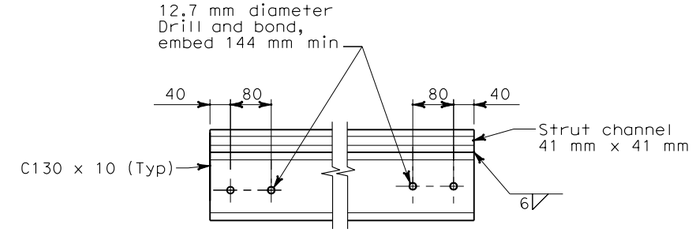

DETAIL 1

NO SCALE

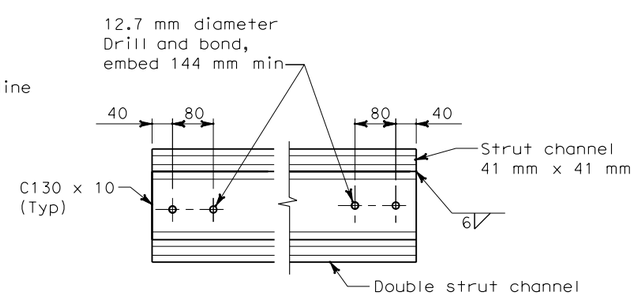

DETAIL 2

NO SCALE

NOTE:

1. Contractor shall verify all dimensions prior to start of work.

SHEET NOTES:

(1) For pull box sizes, location, opening and type, see E-20, E-20B, E-20C, and E-20D.

REQUEST FOR INFORMATION NOT ADDRESSED IN THIS CCO REMAIN IN FORCE

MARK	DATE	DESCRIPTIONS	BY	CH'D	CCO#
0	02/25/08	CABLE TRAY CHANGES	TW	RG SE	42S1

REVISIONS

CONTRACT CHANGE ORDER NO._____
SHEET _____ OF _____

DETAILS
UNDERGROUND
PIER W2W PLANS AND SECTIONS

SCALE AS NOTED

E-20A

THIS PLAN IS ACCURATE FOR ELECTRICAL WORK ONLY.

ALL DIMENSIONS ARE IN MILLIMETERS UNLESS OTHERWISE SHOWN.

FOR REDUCED PLANS ORIGINAL SCALE IS IN MILLIMETERS 0 20 40 60 80

DGN FILE =>T:\13103\MS\pse\SAS Struc\CCO\SAS CCO42S1\CCO 42S1 Final Submittal 2008-07-11\04-0120f1_0103S01.dgn
USERNAME =>llorico

CU 04251 | EA 0120F1

LAST REVISION 00-00-00 | DATE PLOTTED => 7/11/2008 TIME PLOTTED => 2:01:53 PM

STATE OF CALIFORNIA - DEPARTMENT OF TRANSPORTATION

DESIGN OVERSIGHT BEHZAD GOLEMOHAMMADI

CALCULATED/DESIGNED BY TW | DATE 7/07 | REVISED BY
CHECKED BY EJL 7/07 | DATE REVISED

DIST	COUNTY	ROUTE	KILOMETER POST TOTAL PROJECT	SHEET No	TOTAL SHEETS
04	SF	80	13.2/13.9	103 S2	1204

REGISTERED ELECTRICAL ENGINEER — DATE 2/22/08

REGISTERED PROFESSIONAL ENGINEER S. A. ESTOQUE, JR. No. E-10151 Exp. 12/31/2008 STATE OF CALIFORNIA

PLANS APPROVAL DATE

PB AMERICAS, Inc.
A Parsons Brinckerhoff Company
303 Second St., Suite 700N
San Francisco, CA 94107-1317

The State of California or its officers or agents shall not be responsible for the accuracy or completeness of electronic copies of this plan sheet.

Caltrans now has a web site! To get to the web site, go to http://www.dot.ca.gov

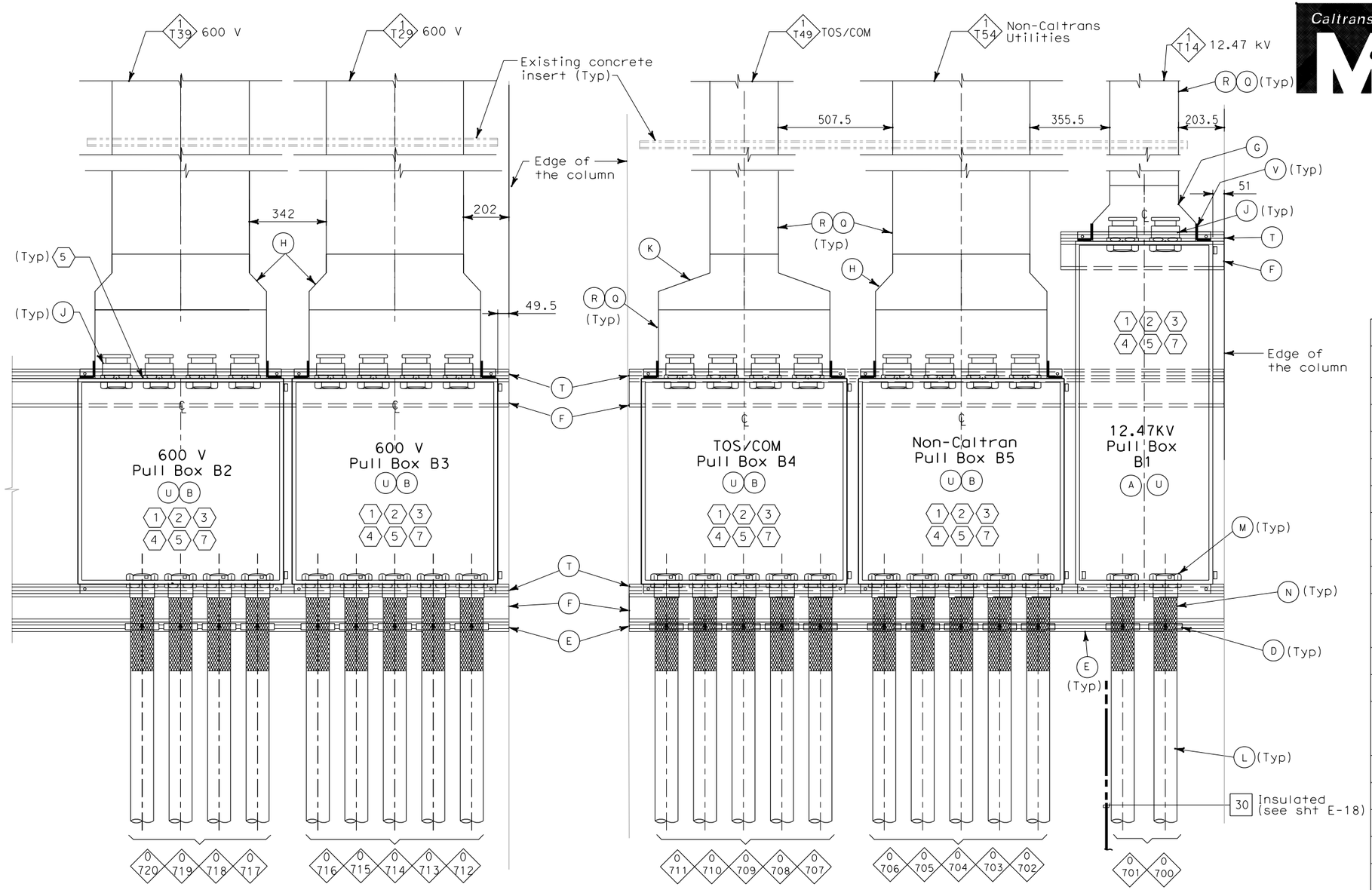

DETAIL 1 (6)
NO SCALE

DETAIL 2 (6)
NO SCALE

MATERIAL LIST

Item No.	Description
A	Pull Box, Nema 4X 1524 mm x 610 mm x 406 mm
B	Pull Box, Nema 4X 914 mm x 914 mm x 305 mm
C	Not used
D	Strut channel conduit clamp for 103 mm
E	Double strut channel 41 mm x 124 mm
F	Channel C130x10
G	Cable tray straight reducer (547 mm to 305 mm)
H	Cable tray straight reducer (762 mm to 610 mm)
J	103 mm conduit hub, 53 mm long nipple and insulated bushing
K	Cable tray straight reducer (762 mm to 305 mm)
L	Liquidtight flexible metal conduit, 103 mm
M	Liquidtight Insulated flexible metal conduit connector with insulated grounding bushing for 103 mm conduit
N	Strain relief grips for flexible conduit, 103 mm
P	Not used
Q	Cable tray, ladder type
R	Cable tray peaked cover and cover clamp
T	Strut channel 41 mm x 41 mm
U	Breather and Drain Hole
V	Tray to box connector plates

SHEET NOTES:

1. For Pull Boxes location see E-20.
2. For Pull Box sizes and opening see E-20C.
3. For Pull Box mounting and support see E-20A.
4. Contractor shall verify all the dimensions prior to start the work.
5. To prevent moisture and water from entering enclosures, Contractor to provide sealant after all cables are pulled. Conduits and nipples without cables shall be capped for future use.
6. Detail 1 & Detail 2 see sheet E-20.
7. All liquidtight flexible metal conduit shall have integral continuous copper ground whether shown on the drawings or not. Bond conduit bushings together and to the metallic enclosures.

NOTE:

1. All cable/cables entering the liquidtight conduits from the pull box shall be provided with strain relief cable/cables grips attached from the vertical cable tray rungs.

REGISTERED PROFESSIONAL ENGINEER FADI WALIEDDINE No. 11465 Exp. 12/31/2009 ELECTRICAL STATE OF CALIFORNIA

FOR REVISION ONLY

REQUEST FOR INFORMATION NOT ADDRESSED IN THIS CCO REMAIN IN FORCE

MARK	DATE	DESCRIPTIONS	BY	CH'D	CCO#
0	02/25/08	CABLE TRAY CHANGES	TW	RG SE	42S1

REVISIONS

CONTRACT CHANGE ORDER NO. _____
SHEET _____ OF _____

DETAILS
UNDERGROUND
PIER W2W PLANS AND SECTIONS

SCALE AS NOTED

E-20B

DATE	REVISED BY	DATE	REVISED
7/07	TW	7/07	EJL

CALCULATED/DESIGNED BY — CHECKED BY

DESIGN OVERSIGHT — BEHZAD GOLEMOHAMMADI

STATE OF CALIFORNIA - DEPARTMENT OF TRANSPORTATION — Caltrans

THIS PLAN IS ACCURATE FOR ELECTRICAL WORK ONLY.

ALL DIMENSIONS ARE IN MILLIMETERS UNLESS OTHERWISE SHOWN.

FOR REDUCED PLANS ORIGINAL SCALE IS IN MILLIMETERS 0 20 40 60 80

DGN FILE =>T:\13103\MS\pse\SAS Struc\CCO\SAS CCO42S1\CCO 42S1 Final Submittal 2008-07-11\04-0120f1_0103S02.dgn
USERNAME =>garciar

CU 04251 — EA 0120F1

LAST REVISION 00-00-00 — DATE PLOTTED => 8/5/2008 TIME PLOTTED => 10:42:23 AM

DIST	COUNTY	ROUTE	KILOMETER POST TOTAL PROJECT	SHEET No	TOTAL SHEETS
04	SF	80	13.2/13.9	103 S3	1204

REGISTERED ELECTRICAL ENGINEER 2/22/08 DATE

PLANS APPROVAL DATE

REGISTERED PROFESSIONAL ENGINEER S. A. ESTOQUE, JR. No. E-10151 Exp. 12/31/2008 ELECTRICAL STATE OF CALIFORNIA

PB AMERICAS, Inc.
A Parsons Brinckerhoff Company
303 Second St., Suite 700N
San Francisco, CA 94107-1317

The State of California or its officers or agents shall not be responsible for the accuracy or completeness of electronic copies of this plan sheet.

Caltrans now has a web site! To get to the web site, go to http://www.dot.ca.gov

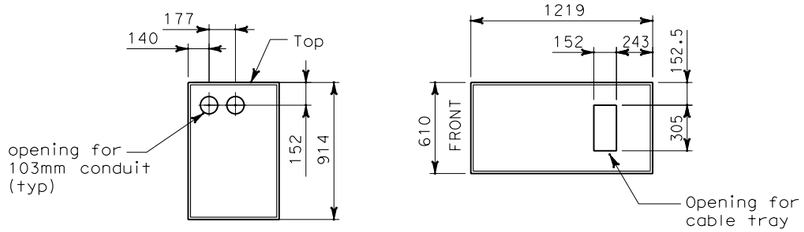

FRONT ELEVATION BOTTOM PLAN

12.47 KV PULL BOX A1 (1)(2)(3)

TOP ACCESS
SCALE 1:20

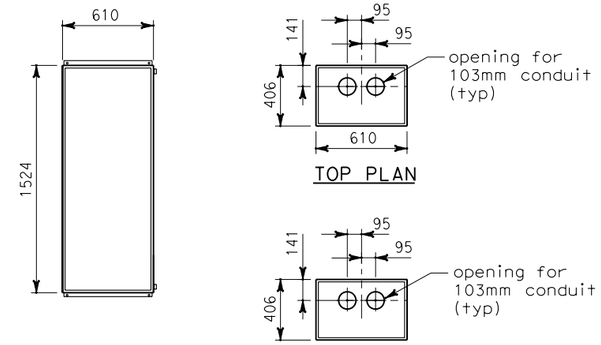

FRONT ELEVATION BOTTOM PLAN

TOP PLAN

12.47 KV PULL BOX B1 (1)(2)(3)

FRONT ACCESS
SCALE 1:20

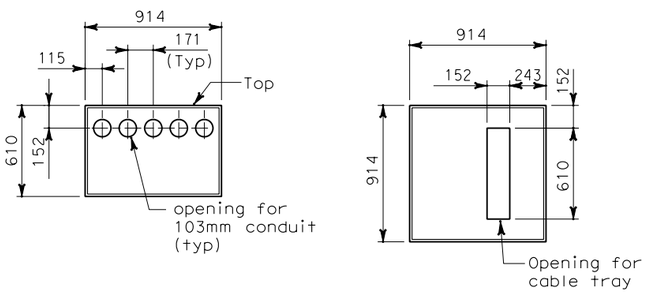

FRONT ELEVATION BOTTOM PLAN

NON-CALTRANS PULL BOX A5 (1)(2)(3)

(FOR TOS/COM PULL BOX A4)
TOP ACCESS
SCALE 1:20

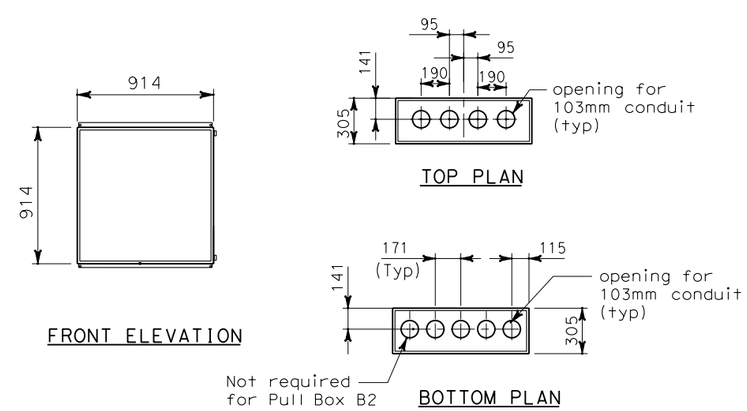

FRONT ELEVATION BOTTOM PLAN

TOP PLAN

NON-CALTRANS PULL BOX B5 (1)(2)(3)

(FOR 600 V PULL BOX B2)
(FOR 600 V PULL BOX B3)
(FOR TOS/COM PULL BOX B4)
FRONT ACCESS
SCALE 1:20

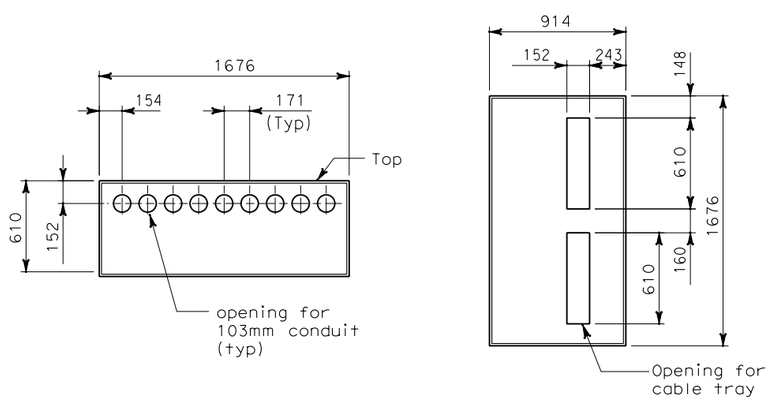

FRONT ELEVATION BOTTOM PLAN

600 PULL BOX A23 (1)(2)(3)

TOP ACCESS
SCALE 1:20

NOTES:

1. Pull Box shall be fabricated of Nema 4X stainless steel, type 304.
2. Provide pad lock for each pull box.
3. Provide nameplate description.

SHEET NOTES:

(1) For pull box location see drawings E-20 E-20A, E-20B and E-20F.

(2) Contractor shall verify all the dimensions prior to start work.

(3) Provide breather and drain fitting at the bottom of each pull box.

REQUEST FOR INFORMATION NOT ADDRESSED IN THIS CCO REMAIN IN FORCE

MARK	DATE	DESCRIPTIONS	BY	CH'D	CCO#
0	02/25/08	CABLE TRAY CHANGES	TW	RG SE	42S1

REVISIONS

CONTRACT CHANGE ORDER NO._____
SHEET _____ OF _____

DETAILS
UNDERGROUND
PIER W2W PLANS AND SECTIONS

SCALE AS NOTED

E-20C

THIS PLAN IS ACCURATE FOR ELECTRICAL WORK ONLY.

ALL DIMENSIONS ARE IN MILLIMETERS UNLESS OTHERWISE SHOWN.

FOR REDUCED PLANS ORIGINAL SCALE IS IN MILLIMETERS 0 20 40 60 80

DGN FILE =>T:\13103\MS\pse\SAS Struc\CCO\SAS CCO42S1\CCO 42S1 Final Submittal 2008-07-11\04-0120f1_0103S03.dgn
USERNAME =>llorico

CU 04251 EA 0120F1

STATE OF CALIFORNIA - DEPARTMENT OF TRANSPORTATION
Caltrans

DESIGN OVERSIGHT BEHZAD GOLEMOHAMMADI

CALCULATED/DESIGNED BY TW DATE 7/07 REVISED BY
CHECKED BY EL 7/07 DATE REVISED

LAST REVISION 00-00-00
DATE PLOTTED => 7/11/2008
TIME PLOTTED => 2:02:49 PM

DIST	COUNTY	ROUTE	KILOMETER POST TOTAL PROJECT	SHEET No	TOTAL SHEETS
04	SF	80	13.2/13.9	103 S4	1204

REGISTERED ELECTRICAL ENGINEER 2/22/08 DATE

PLANS APPROVAL DATE

REGISTERED PROFESSIONAL ENGINEER S. A. ESTOQUE, JR. No. E-10151 Exp. 12/31/2008 ELECTRICAL STATE OF CALIFORNIA

PB AMERICAS, Inc.
A Parsons Brinckerhoff Company
303 Second St., Suite 700N
San Francisco, CA 94107-1317

The State of California or its officers or agents shall not be responsible for the accuracy or completeness of electronic copies of this plan sheet.

Caltrans now has a web site! To get to the web site, go to http://www.dot.ca.gov

Caltrans Metric

SHEET NOTES:

1. For pull box sizes and opening see E-20C.
2. For pull box location see E-20.
3. Do not secure flexible conduit at this location.
4. Hardwares and conponents are for strut channels.

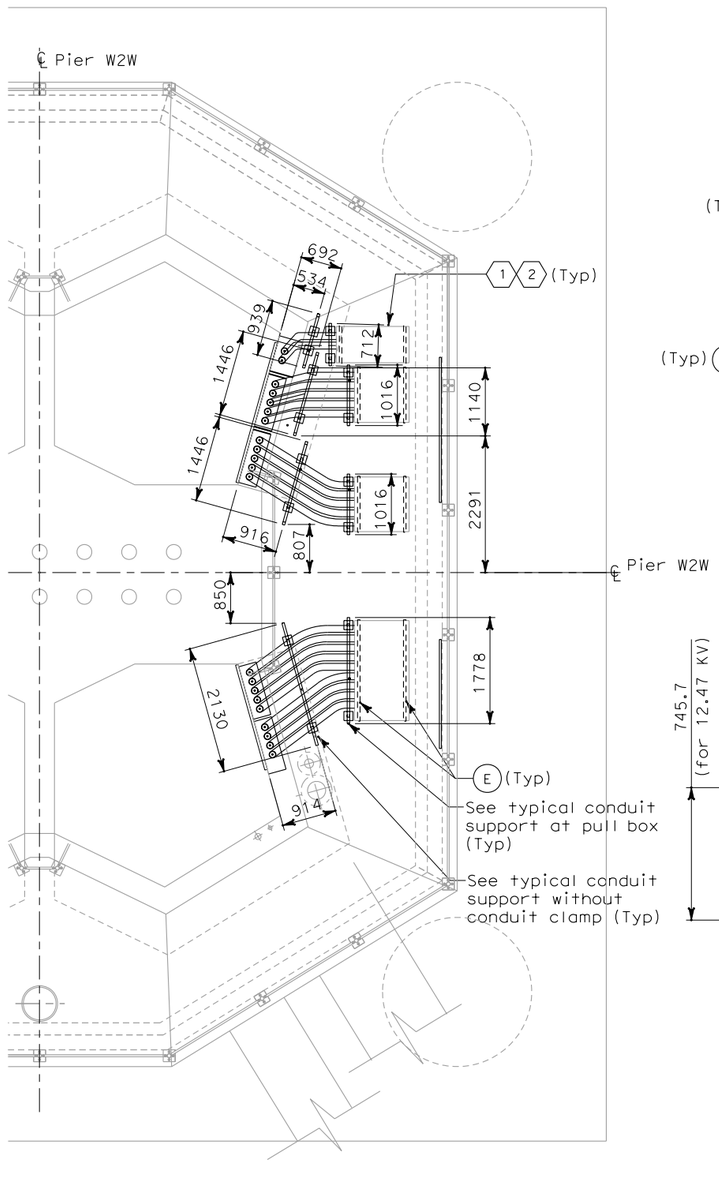

CONDUIT SUPPORT AT GRADE

PLAN AT PIER W2W
SCALE 1:50

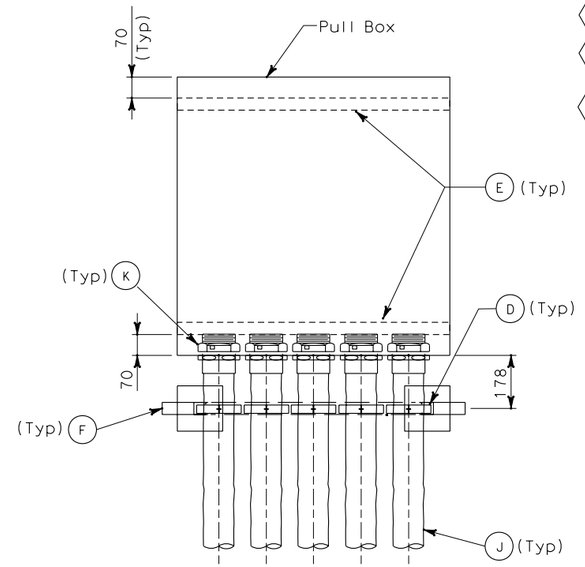

TOP VIEW

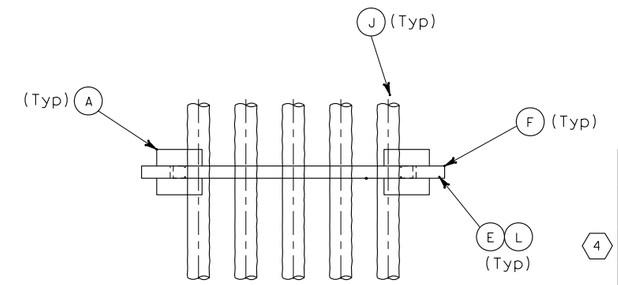

TOP VIEW

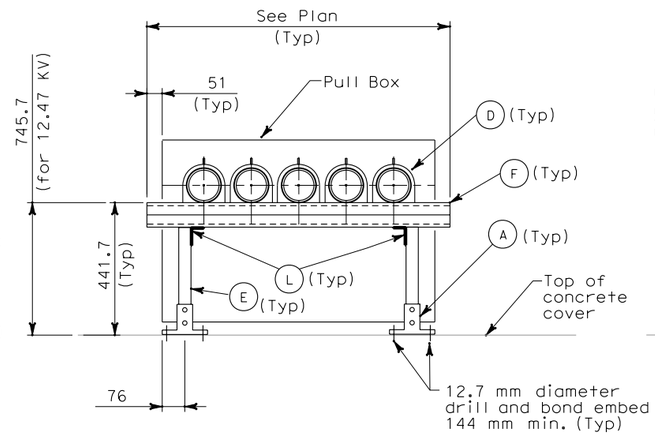

FRONT VIEW

TYPICAL CONDUIT SUPPORT AT PULL BOX

NO SCALE

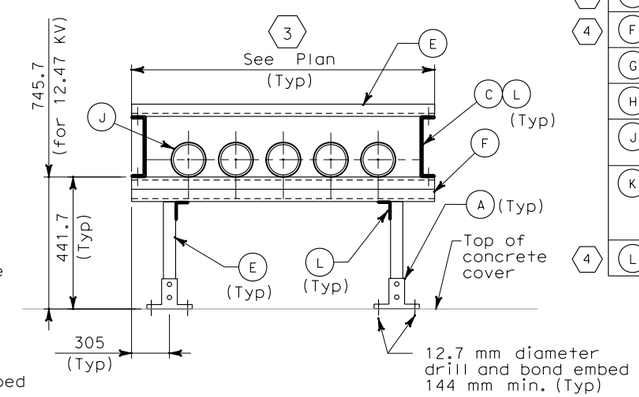

FRONT VIEW

TYPICAL CONDUIT SUPPORT WITHOUT CONDUIT CLAMP

NO SCALE

MATERIAL LIST

	Item No.	Description
4	A	Strut Post Base 152 mm x 152 mm.
	B	Not used
4	C	Strut channel spring nut, lockwasher and hex bolt (41 mm)
4	D	Strut channel conduit clamp for 103 mm
4	E	Strut channel 41 mm x 41 mm
4	F	Double strut channel 41.3 mm x 82.6 mm
	G	Not used
	H	Not used
	J	Liquidtight flexible metal conduit, 103 mm
	K	Liquidtight Insulated flexible metal conduit connector with insulated grounding bushing for 103 mm conduit
4	L	203 mm U-shape fitting

MARK	DATE	DESCRIPTIONS	BY	CH'D	CCO#
0	02/25/08	CABLE TRAY CHANGES	TW	RG SE	42S1

REQUEST FOR INFORMATION NOT ADDRESSED IN THIS CCO REMAIN IN FORCE

REVISIONS

CONTRACT CHANGE ORDER NO._____
SHEET _____ OF _____

DETAILS
UNDERGROUND
PIER W2W PLANS AND SECTIONS

SCALE AS NOTED

E-20D

THIS PLAN IS ACCURATE FOR ELECTRICAL WORK ONLY.

STATE OF CALIFORNIA - DEPARTMENT OF TRANSPORTATION

Caltrans

DESIGN OVERSIGHT: BEHZAD GOLEMOHAMMADI

CALCULATED/DESIGNED BY: TW — DATE 7/07 — REVISED BY
CHECKED BY: EJL — 7/07 — DATE REVISED

FOR REDUCED PLANS ORIGINAL SCALE IS IN MILLIMETERS: 0 20 40 60 80

DGN FILE =>T:\13103\MS\pse\SAS Struc\CCO\SAS CC042S1\CCO 42S1 Final Submittal 2008-07-11\04-0120f1_0103S04.dgn
USERNAME =>llorico

CU 04251 EA 0120F1

LAST REVISION 00-00-00 DATE PLOTTED => 7/11/2008 TIME PLOTTED => 2:03:11 PM

DIST	COUNTY	ROUTE	KILOMETER POST TOTAL PROJECT	SHEET No	TOTAL SHEETS
04	SF	80	13.2/13.9	103 S5	1204

REGISTERED ELECTRICAL ENGINEER — DATE 2/22/08

REGISTERED PROFESSIONAL ENGINEER S. A. ESTOQUE, JR. No. E-10151 Exp. 12/31/2008 ELECTRICAL STATE OF CALIFORNIA

PLANS APPROVAL DATE

PB AMERICAS, Inc.
A Parsons Brinckerhoff Company
303 Second St., Suite 700N
San Francisco, CA 94107-1317

The State of California or its officers or agents shall not be responsible for the accuracy or completeness of electronic copies of this plan sheet.

Caltrans now has a web site! To get to the web site, go to http://www.dot.ca.gov

Caltrans Metric

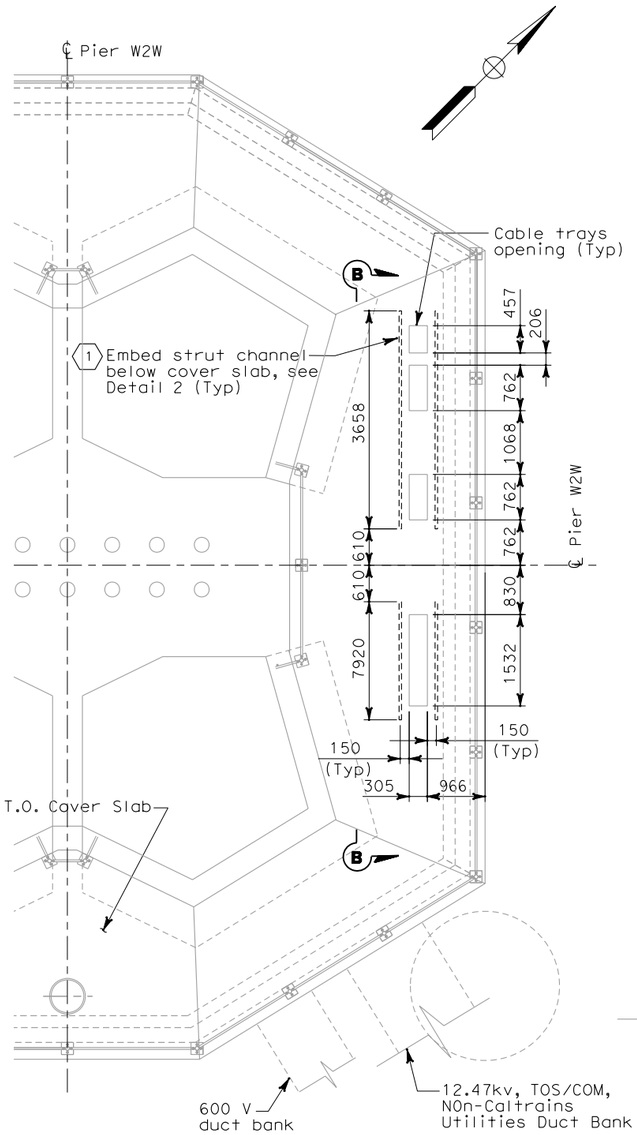

CABLE TRAY OPENING AND CONCRETE INSERT CHANNEL

PLAN AT PIER W2W
SCALE: 1:20

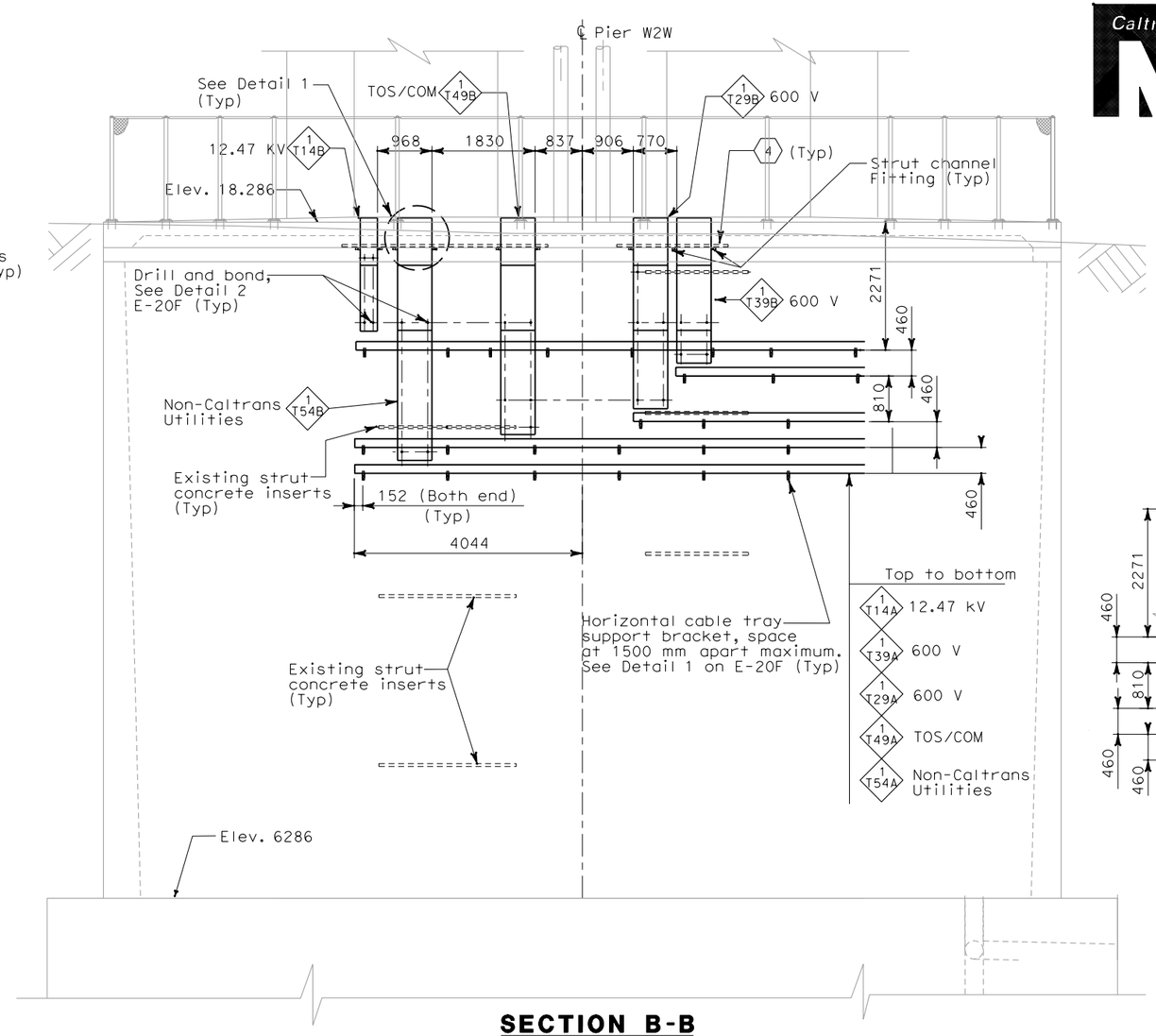

SECTION B-B

SCALE: 1:50

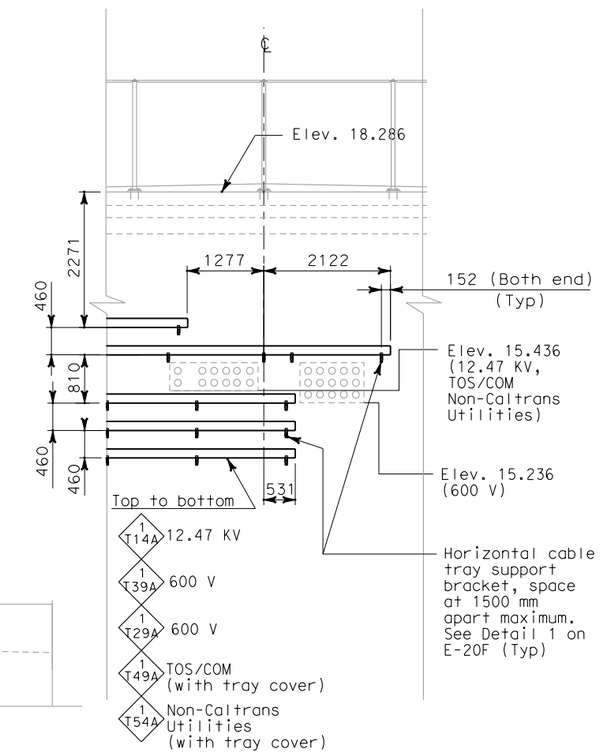

SECTION E-E

2

SCALE: 1:50

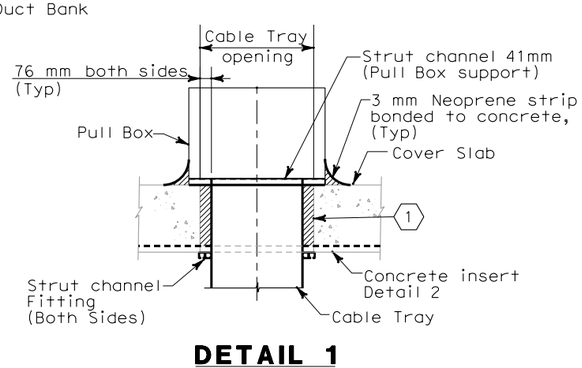

DETAIL 1

SCALE: 1:20

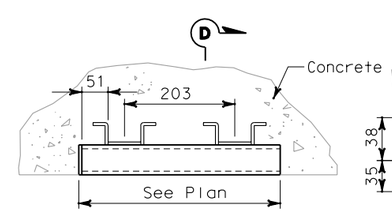

DETAIL 2 CEILING MOUNT

NO SCALE

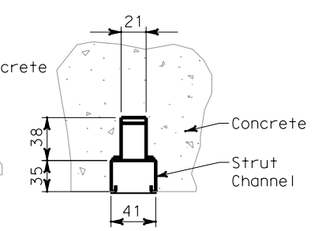

SECTION D-D

NO SCALE

REQUEST FOR INFORMATION NOT ADDRESSED IN THIS CCO REMAIN IN FORCE

MARK	DATE	DESCRIPTIONS	BY	CH'D	CCO#
0	02/25/08	CABLE TRAY CHANGES	TW	RG SE	42S1

REVISIONS

CONTRACT CHANGE ORDER NO. _____
SHEET _____ OF _____

DETAILS
UNDERGROUND
PIER W2W PLANS AND SECTIONS

SCALE AS NOTED

SHEET NOTES:

1. For fill-in material between cable tray and concrete, See Structures.
2. Section E-E see sheet E-20.

THIS PLAN IS ACCURATE FOR ELECTRICAL WORK ONLY.

ALL DIMENSIONS ARE IN MILLIMETERS UNLESS OTHERWISE SHOWN.

FOR REDUCED PLANS ORIGINAL SCALE IS IN MILLIMETERS 0 20 40 60 80

DGN FILE =>T:\13103\MS\pse\SAS Struc\CCO\SAS CCO42S1\CCO 42S1 Final Submittal 2008-07-11\04-0120F1_0103S05.dgn
USERNAME =>llorico

CU 04251 | EA 0120F1

E-20E

CALCULATED/ DESIGNED BY	TW	DATE 07/07	REVISED BY
CHECKED BY	EJL	07/07	DATE REVISED

DESIGN OVERSIGHT
BEHZAD GOLEMOHAMMADI

STATE OF CALIFORNIA - DEPARTMENT OF TRANSPORTATION
Caltrans

LAST REVISION 00-00-00

DATE PLOTTED => 7/11/2008
TIME PLOTTED => 2:03:29 PM

DIST	COUNTY	ROUTE	KILOMETER POST TOTAL PROJECT	SHEET No	TOTAL SHEETS
04	SF	80	13.2/13.9	103 S6	1204

REGISTERED ELECTRICAL ENGINEER — DATE 2/22/08

REGISTERED PROFESSIONAL ENGINEER S. A. ESTOQUE, JR. No. E-10151 Exp. 12/31/2008 ELECTRICAL STATE OF CALIFORNIA

PLANS APPROVAL DATE

PB AMERICAS, Inc.
A Parsons Brinckerhoff Company
303 Second St., Suite 700N
San Francisco, CA 94107-1317

The State of California or its officers or agents shall not be responsible for the accuracy or completeness of electronic copies of this plan sheet.

Caltrans now has a web site! To get to the web site, go to http://www.dot.ca.gov

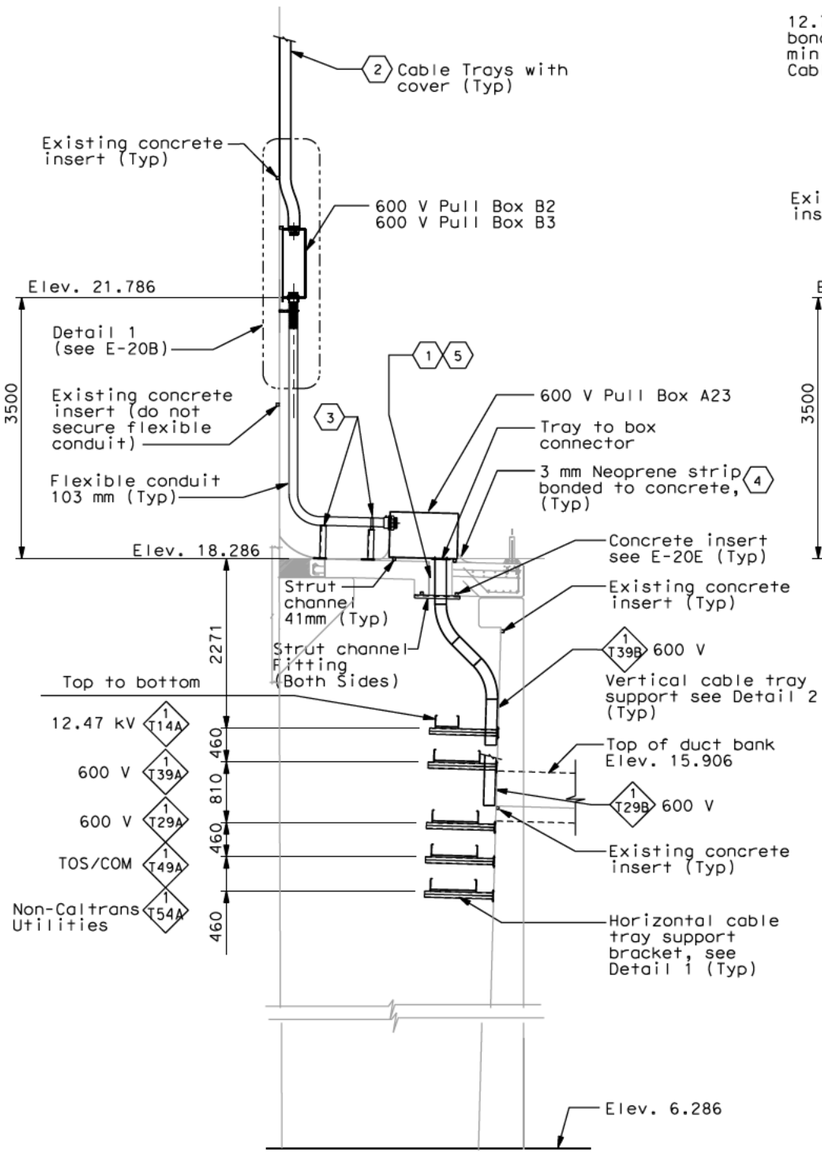

SECTION C-C 6

SCALE: 1:20

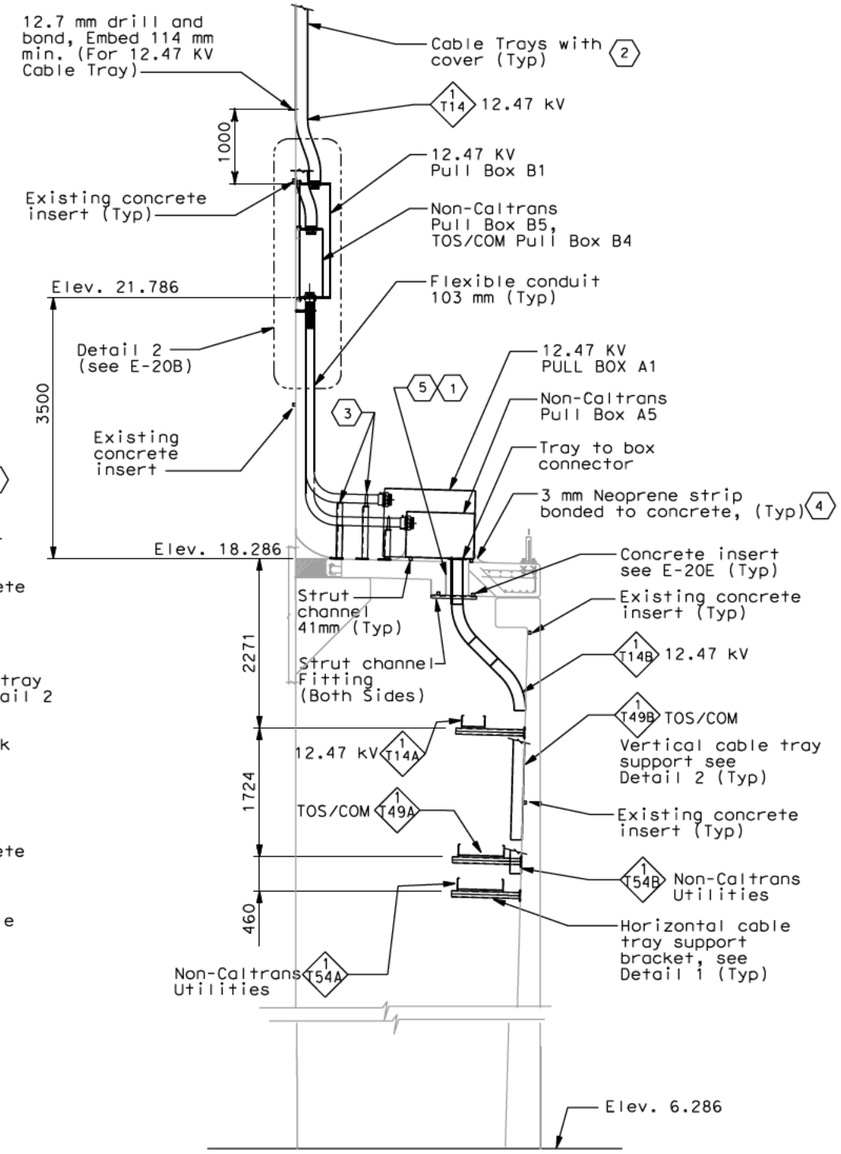

SECTION D-D 6

SCALE: 1:20

NOTES:

1. References:
   - For duct bank and manhole plan, see sheet E-11.
   - For duct bank section, see sheet E-19.
   - For circuit and conduit/cable tray schedules, see sheets starting at E-401.
   - For foundation grounding, see sheet E-22.
   - For grounding interface, see sheet E-18.
   - For duct bank elevations at W2W, see sheet E-23.

SHEET NOTES:

1. For fill-in material between cable tray and concrete, see Structures.
2. For continuation see E-128.
3. For conduit support see E-20D.
4. The contractor to provide water tight seal after cables are pulled.
5. For embed strut channel and cable tray opening location at pier W2 cover slab see E-20E.
6. Section C-C and Section D-D see sheet E-20.

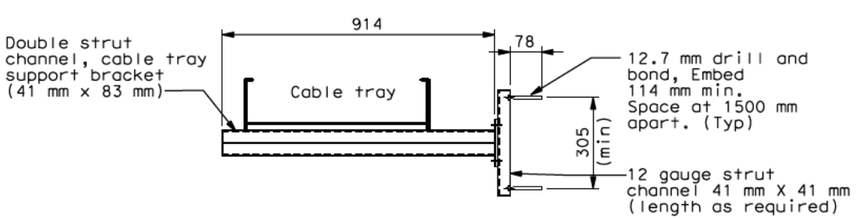

HORIZONTAL CABLE TRAY SUPPORT BRACKET

DETAIL 1

NO SCALE

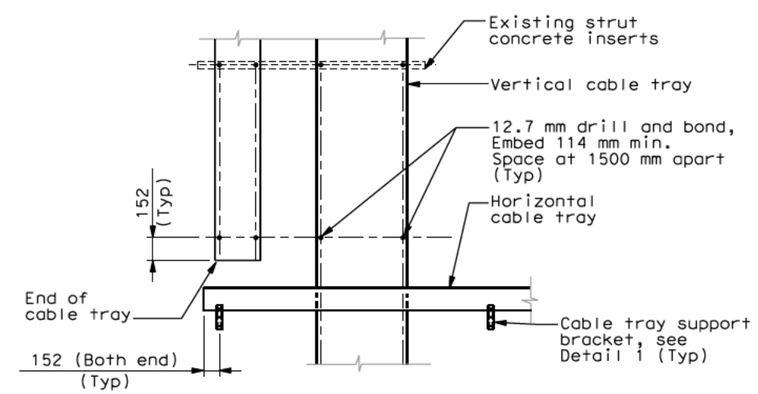

VERTICAL CABLE TRAY SUPPORT

DETAIL 2

NO SCALE

REQUEST FOR INFORMATION NOT ADDRESSED IN THIS CCO REMAIN IN FORCE					
0	02/25/08	CABLE TRAY CHANGES	RG	SE	42S1
MARK	DATE	DESCRIPTIONS	BY	CH'D	CCO#
		REVISIONS			

CONTRACT CHANGE ORDER NO._____
SHEET _____ OF _____

DETAILS
UNDERGROUND
PIER W2W SECTIONS AND DETAIL

SCALE AS NOTED

E-20F

ALL DIMENSIONS ARE IN MILLIMETERS UNLESS OTHERWISE SHOWN.

FOR REDUCED PLANS ORIGINAL SCALE IS IN MILLIMETERS 0 20 40 60 80

DGN FILE =>T:\13103\MS\pse\SAS Struc\CCO\SAS CC042S1\04-0120f1_0103S06.dgn
USERNAME =>llorico

CU 04251 | EA 0120F1

DATE PLOTTED => 7/11/2008
TIME PLOTTED => 2:05:26 PM

LAST REVISION 00-00-00

CALCULATED/ DESIGNED BY	TW	DATE 7/07	REVISED BY
CHECKED BY	EJL	07/07	DATE REVISED

DESIGN OVERSIGHT
BEHZAD GOLEMOHAMMADI

STATE OF CALIFORNIA - DEPARTMENT OF TRANSPORTATION
Caltrans

DIST	COUNTY	ROUTE	KILOMETER POST TOTAL PROJECT	SHEET No	TOTAL SHEETS
04	SF	80	13.2/13.9	104 R1	1204

Caltrans Metric

REGISTERED ELECTRICAL ENGINEER 12/19/02 DATE

12-6-04
PLANS APPROVAL DATE

REGISTERED PROFESSIONAL ENGINEER JENS ERLINGSSON No. 8249 Exp. 9/30/06 ELECTRICAL STATE OF CALIFORNIA

PB POWER, Inc.
A Parsons Brinckerhoff Company
303 Second St., Suite 700N
San Francisco, CA 94107-1317

The State of California or its officers or agents shall not be responsible for the accuracy or completeness of electronic copies of this plan sheet.

Caltrans now has a web site! To get to the web site, go to http://www.dot.ca.gov

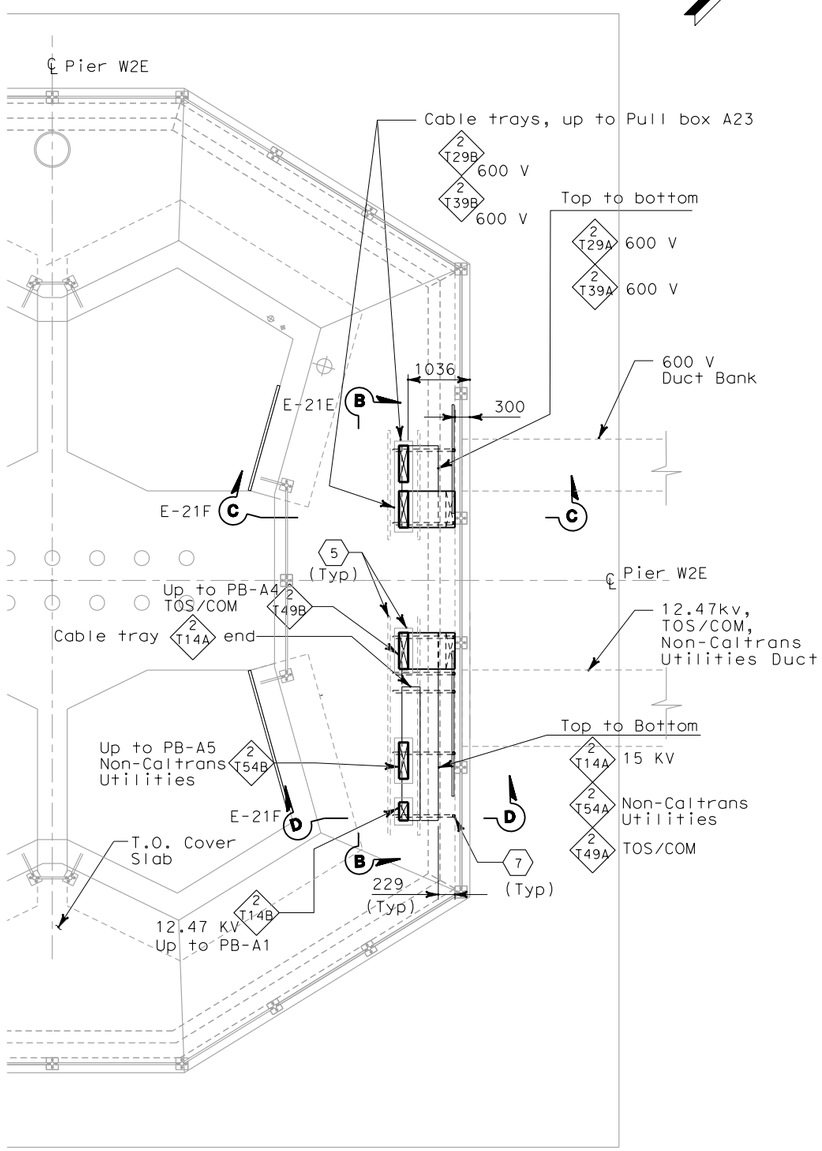

PLAN AT BELOW COVER PIER W2E

SCALE: 1:20

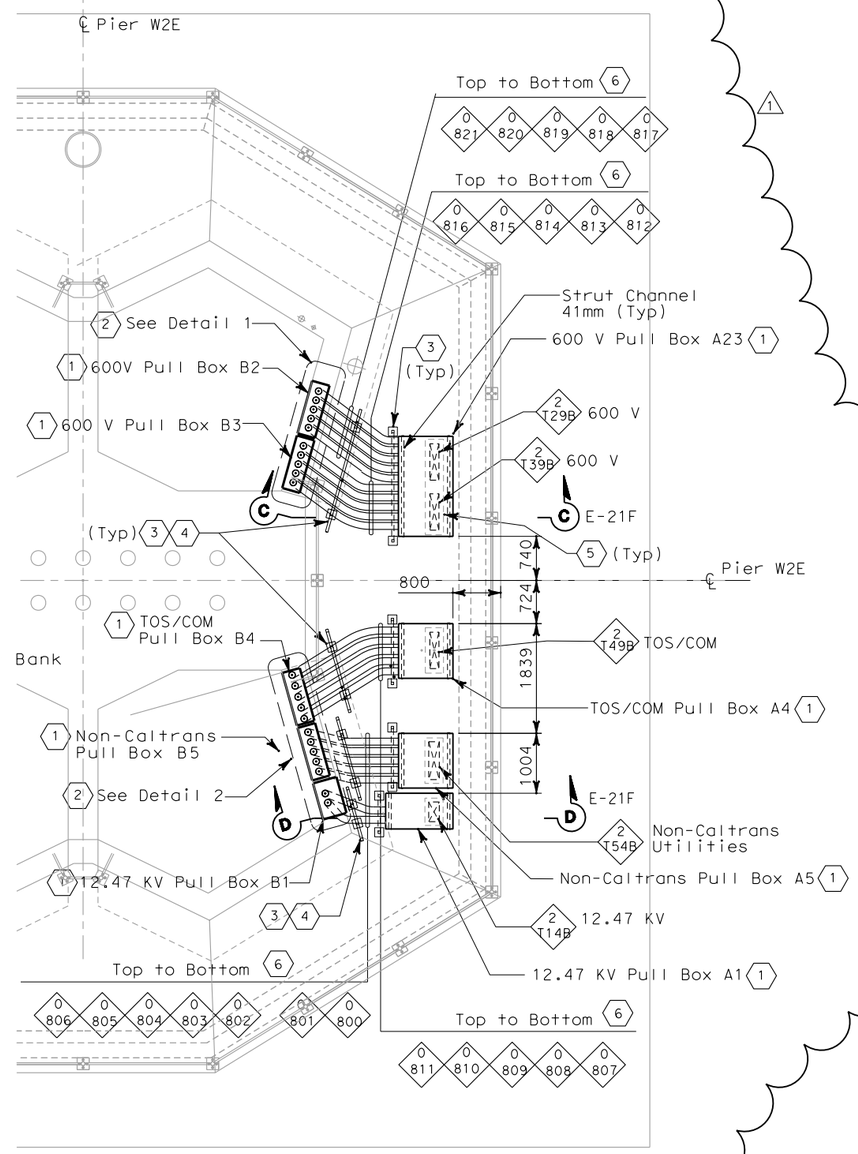

PLAN AT GRADE PIER W2E

SCALE: 1:20

NOTES:

1. References:
   - For duct banks and manholes, see sheet E-11.
   - For duct bank sections, see sheet E-19.
   - For circuit and conduit/cable tray schedules, see sheets starting at E-401.
   - For grounding interface, see sheet E-18.
   - For foundation grounding, see sheet E-22.
   - For SAS Superstructure girder eastbound grounding plan, see sheets E-196 and E-18.
   - For duct banks elevations at W2E, see sheet E-23.

SHEET NOTES:

1. For pull box sizes, opening and type see sheet E-21C.
2. For Details 1 and 2, see sheet E-21B.
3. For conduit support details, see E-21D.
4. Do not secure liquidtight metal flexible conduit at this support location.
5. For embed strut channel and cable tray opening location at pier W2 cover slab see E-21E.
6. Length of flexible conduits shall be provided for seismic movement. The maximum expansion displacement is 400 mm.
7. Cable tray support bracket, see Detail 1, Sheet E-21F.

REGISTERED PROFESSIONAL ENGINEER S. A. ESTOQUE, JR No. E-10151 Exp. 12/31/2008 ELECTRICAL STATE OF CALIFORNIA

FOR REVISION ONLY

REQUEST FOR INFORMATION NOT ADDRESSED IN THIS CCO REMAIN IN FORCE

MARK	DATE	DESCRIPTIONS	BY	CH'D	CCO#
1	02/25/08	CABLE TRAY CHANGES	TW	RG SE	42S1

REVISIONS

CONTRACT CHANGE ORDER NO._____
SHEET _____ OF _____

DETAILS
UNDERGROUND
PIER W2E PLANS AND SECTIONS

SCALE AS NOTED

E-21

STATE OF CALIFORNIA - DEPARTMENT OF TRANSPORTATION
Caltrans

DESIGN OVERSIGHT: BEHZAD GOLEMOHAMMADI
CALCULATED/DESIGNED BY: FK DATE 07/07 REVISED BY
CHECKED BY: IAH 07/07 DATE REVISED

THIS PLAN IS ACCURATE FOR ELECTRICAL WORK ONLY.

ALL DIMENSIONS ARE IN MILLIMETERS UNLESS OTHERWISE SHOWN.

FOR REDUCED PLANS ORIGINAL SCALE IS IN MILLIMETERS 0 20 40 60 80

DGN FILE =>T:\13103\MS\pse\SAS Struc\CCO\SAS CCO42S1\04-0120f1_0104R01.dgn
USERNAME =>llorico

CU 04251

EA 0120F1

LAST REVISION 00-00-00
DATE PLOTTED => 7/11/2008
TIME PLOTTED => 2:05:47 PM

DIST	COUNTY	ROUTE	KILOMETER POST TOTAL PROJECT	SHEET No	TOTAL SHEETS
04	SF	80	13.2/13.9	104 S1	1204

REGISTERED ELECTRICAL ENGINEER — DATE 2/22/08

PLANS APPROVAL DATE

REGISTERED PROFESSIONAL ENGINEER S. A. ESTOQUE, JR. No. E-10151 Exp. 12/31/2008 ELECTRICAL STATE OF CALIFORNIA

PB AMERICAS, Inc.
A Parsons Brinckerhoff Company
303 Second St., Suite 700N
San Francisco, CA 94107-1317

The State of California or its officers or agents shall not be responsible for the accuracy or completeness of electronic copies of this plan sheet.

Caltrans now has a web site! To get to the web site, go to http://www.dot.ca.gov

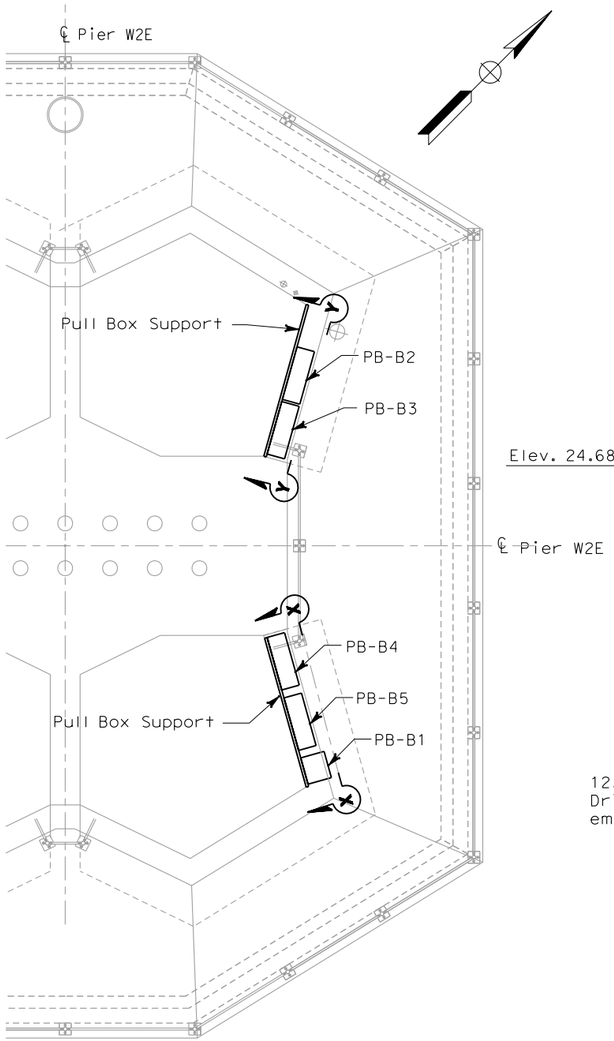

PLAN AT PIER W2E

PULL BOX MOUNTING AT FACE OF COLUMN
SCALE 1:20

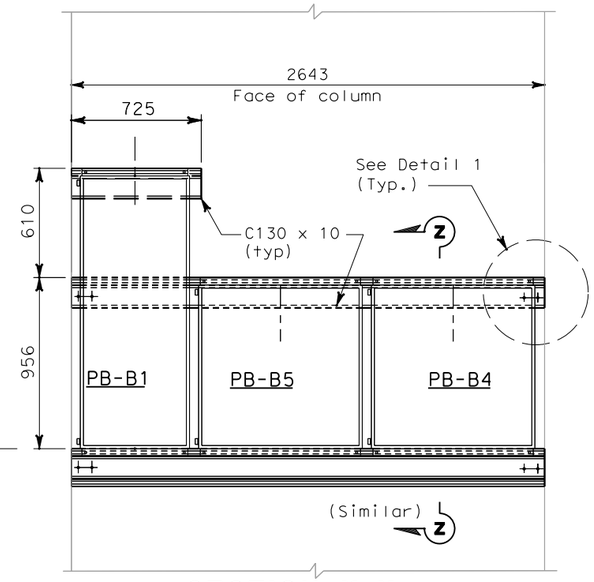

SECTION X-X (1)

PULL BOX SUPPORT
NO SCALE

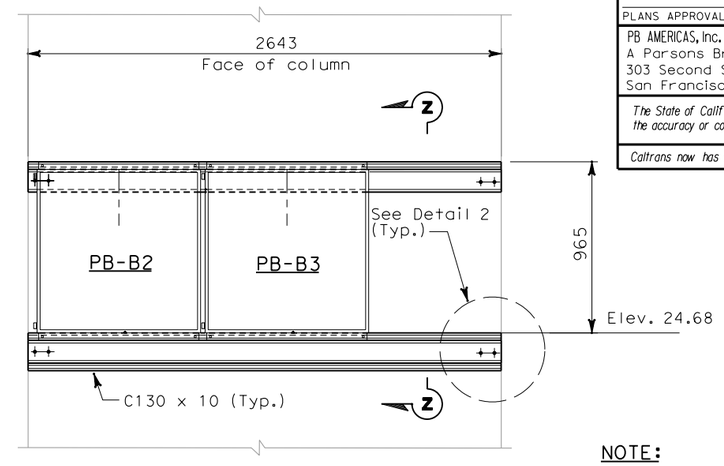

SECTION Y-Y (1)

PULL BOX SUPPORT
NO SCALE

NOTE:

1. Contractor shall verify all dimensions prior to start of work.

SHEET NOTE:

(1) For pull box sizes, location, opening and type, see E-21, E-21B, E-21C, and E-21D.

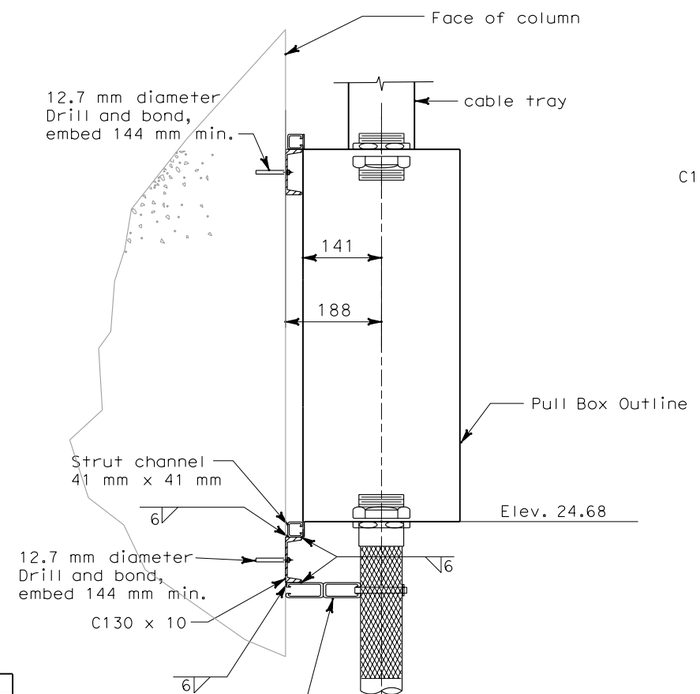

SECTION Z-Z

NO SCALE

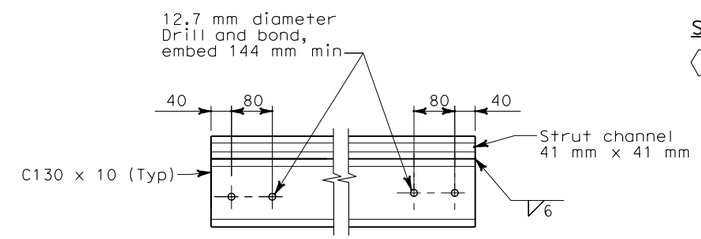

DETAIL 1

NO SCALE

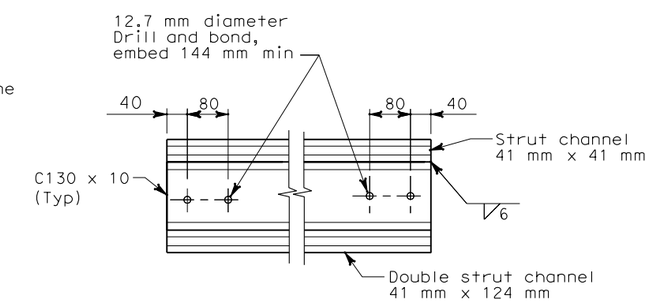

DETAIL 2

NO SCALE

DETAILS
UNDERGROUND
PIER W2E PLANS AND SECTIONS

SCALE AS NOTED

REQUEST FOR INFORMATION NOT ADDRESSED IN THIS CCO REMAIN IN FORCE					
0	02/25/08	CABLE TRAY CHANGES	TW	RG SE	42S1
MARK	DATE	DESCRIPTIONS	BY	CH'D	CCO#
REVISIONS					

CONTRACT CHANGE ORDER NO._____
SHEET _____ OF _____

THIS PLAN ACCURATE FOR ELECTRICAL WORK ONLY.

ALL DIMENSIONS ARE IN MILLIMETERS UNLESS OTHERWISE SHOWN.

DATE	REVISED BY
7/07	DATE REVISED

CALCULATED/DESIGNED BY: TW — DATE 7/07
CHECKED BY: EJL — 7/07

DESIGN OVERSIGHT: BEHZAD GOLEMOHAMMADI

STATE OF CALIFORNIA - DEPARTMENT OF TRANSPORTATION

Caltrans

FOR REDUCED PLANS ORIGINAL SCALE IS IN MILLIMETERS: 0 20 40 60 80

DGN FILE =>T:\13103\MS\pse\SAS Struc\CCO\SAS CCO42S1\04-0120f1_0104S01.dgn
USERNAME =>llorico

CU 04251 — EA 0120F1

LAST REVISION 00-00-00 — DATE PLOTTED => 7/11/2008 TIME PLOTTED => 2:06:20 PM

E-21A

DIST	COUNTY	ROUTE	KILOMETER POST TOTAL PROJECT	SHEET No	TOTAL SHEETS
04	SF	80	13.2/13.9	104 S2	1204

REGISTERED ELECTRICAL ENGINEER — DATE 2/22/08

PLANS APPROVAL DATE

REGISTERED PROFESSIONAL ENGINEER S. A. ESTOQUE, JR. No. E-10151 Exp. 12/31/2008 ELECTRICAL STATE OF CALIFORNIA

PB AMERICAS, Inc.
A Parsons Brinckerhoff Company
303 Second St., Suite 700N
San Francisco, CA 94107-1317

The State of California or its officers or agents shall not be responsible for the accuracy or completeness of electronic copies of this plan sheet.

Caltrans now has a web site! To get to the web site, go to http://www.dot.ca.gov

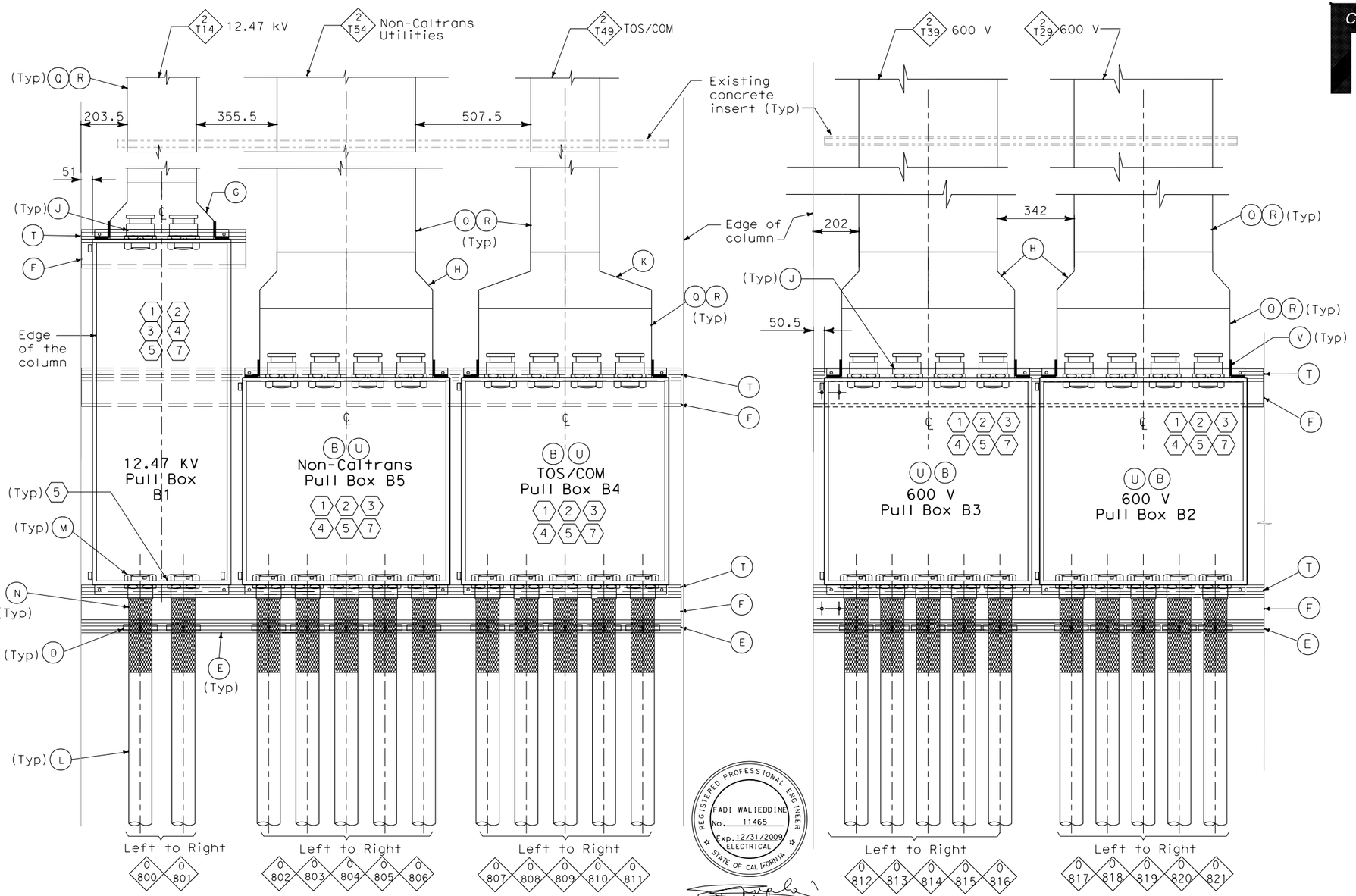

DETAIL 2 (6)
NO SCALE

DETAIL 1 (6)
NO SCALE

REGISTERED PROFESSIONAL ENGINEER FADI WALIEDDINE No. 11465 Exp. 12/31/2009 ELECTRICAL STATE OF CALIFORNIA

FOR REVISION ONLY

MATERIAL LIST

Item No.	Description
A	Pull Box, Nema 4X 1524 mm x 610 mm x 406 mm
B	Pull Box, Nema 4X 914 mm x 914 mm x 305 mm
C	Not used
D	Strut channel conduit clamp for 103 mm
E	Double strut channel 41 mm x 124 mm
F	Channel C130x10
G	Cable tray straight reducer (547 mm to 305 mm)
H	Cable tray straight reducer (762 mm to 610 mm)
J	103 mm conduit hub, 53 mm long nipple and insulated bushing
K	Cable tray straight reducer (762 mm to 305 mm)
L	Liquidtight flexible metal conduit, 103 mm
M	Liquidtight Insulated flexible metal conduit connector with insulated grounding bushing lug for 103mm conduit
N	Strain relief grips for flexible conduit, 103 mm
P	Not used
Q	Cable tray, ladder type
R	Cable tray peaked cover and cover clamp
T	Strut channel 41 mm x 41 mm
U	Breather and Drain Hole
V	Tray to box connector plates

NOTE:

1. All cable/cables entering the liquidtight conduits from the pull box shall be provided with strain relief cable/cables grips attached from inside the pull box.

SHEET NOTES:

(1) For Pull Boxes location see E-21.

(2) For Pull Box sizes and opening see E-21C.

(3) For Pull Box mounting and support see E-21A.

(4) Contractor shall verify all the dimensions prior to start the work.

(5) To prevent moisture and water from entering enclosures, Contractor to provide sealant after all cables are pulled. Conduit and nipples without cables shall be capped for future use.

(6) Detail 1 and Detail 2 see sheet E-21.

(7) All liquidtight flexible metallic conduit shall have integral continuous copper ground whether shown on the drawings or not. Bond conduit bushings together and to the metallic enclosures

REQUEST FOR INFORMATION NOT ADDRESSED IN THIS CCO REMAIN IN FORCE

MARK	DATE	DESCRIPTIONS	BY	CH'D	CCO#
0	02/25/08	CABLE TRAY CHANGES	TW	RG SE	42S1

REVISIONS

CONTRACT CHANGE ORDER NO._____
SHEET _____ OF _____

DETAILS
UNDERGROUND
PIER W2E PLANS AND SECTIONS
SCALE AS NOTED

E-21B

REVISED BY	DATE REVISED
TW	7/07

CALCULATED/DESIGNED BY	CHECKED BY
EJL	

DESIGN OVERSIGHT
BEHZAD GOLEMOHAMMADI

STATE OF CALIFORNIA - DEPARTMENT OF TRANSPORTATION
Caltrans

THIS PLAN IS ACCURATE FOR ELECTRICAL WORK ONLY.

ALL DIMENSIONS ARE IN MILLIMETERS UNLESS OTHERWISE SHOWN.

FOR REDUCED PLANS ORIGINAL SCALE IS IN MILLIMETERS 0 20 40 60 80

DGN FILE =>T:\13103\MS\pse\SAS Struc\CCO\SAS CCO42S1\CCO 42S1 Final Submittal 2008-07-11\04-0120f1_0104S02.dgn
USERNAME =>garciar

CU 04251 | EA 0120F1

LAST REVISION 00-00-00 | DATE PLOTTED => 8/5/2008 TIME PLOTTED => 10:43:25 AM

DIST	COUNTY	ROUTE	KILOMETER POST TOTAL PROJECT	SHEET No	TOTAL SHEETS
04	SF	80	13.2/13.9	104 S3	1204

REGISTERED ELECTRICAL ENGINEER 2/22/08 DATE

PLANS APPROVAL DATE

REGISTERED PROFESSIONAL ENGINEER S. A. ESTOQUE, JR. No. E-10151 Exp. 12/31/2008 ELECTRICAL STATE OF CALIFORNIA

PB AMERICAS, Inc.
A Parsons Brinckerhoff Company
303 Second St., Suite 700N
San Francisco, CA 94107-1317

The State of California or its officers or agents shall not be responsible for the accuracy or completeness of electronic copies of this plan sheet.

Caltrans now has a web site! To get to the web site, go to http://www.dot.ca.gov

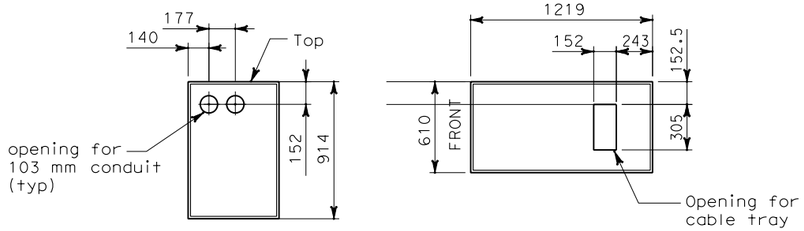

FRONT ELEVATION BOTTOM PLAN

12.47 KV PULL BOX A1 (1)(2)(3)

TOP ACCESS
SCALE 1:20

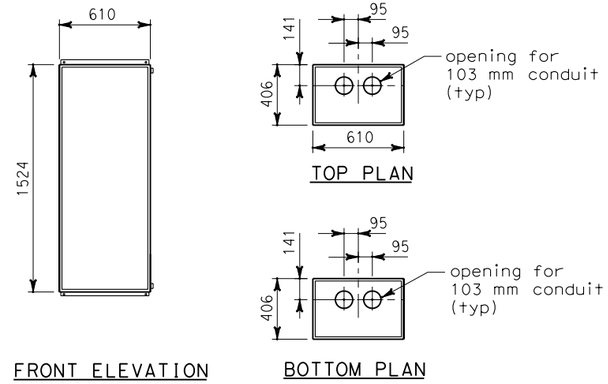

FRONT ELEVATION BOTTOM PLAN

TOP PLAN

12.47 KV PULL BOX B1 (1)(2)(3)

FRONT ACCESS
SCALE 1:20

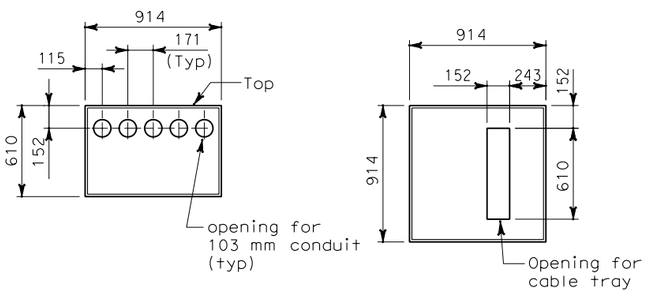

FRONT ELEVATION BOTTOM PLAN

NON-CALTRANS PULL BOX A5 (1)(2)(3)

(FOR TOS/COM PULL BOX A4)
TOP ACCESS
SCALE 1:20

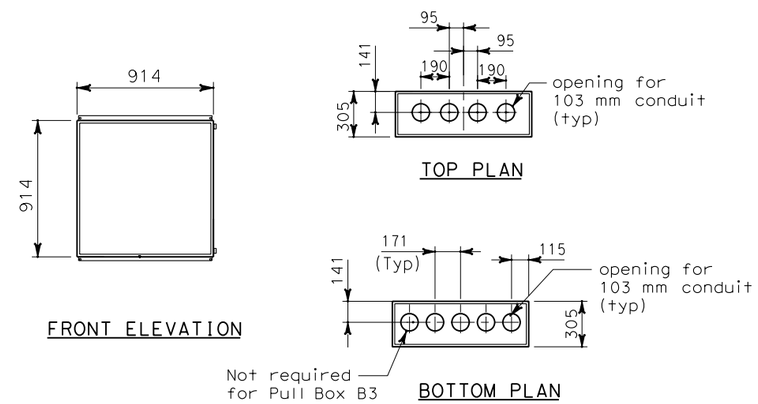

TOP PLAN

FRONT ELEVATION BOTTOM PLAN

NON-CALTRANS PULL BOX B5 (1)(2)(3)

(FOR 600 V PULL BOX B2)
(FOR 600 V PULL BOX B3)
(FOR TOS/COM PULL BOX B4)
FRONT ACCESS
SCALE 1:20

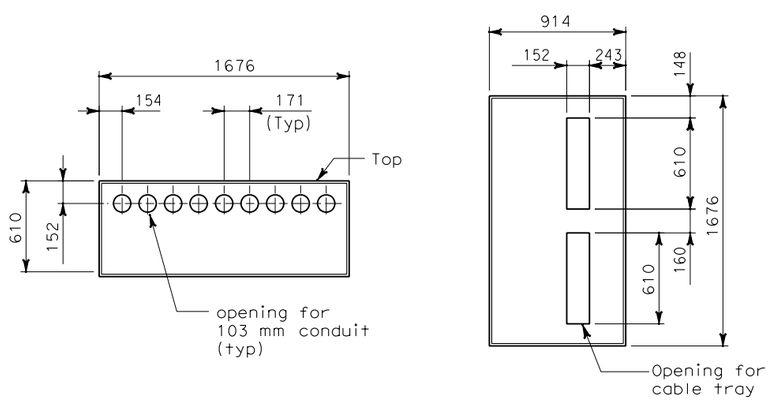

FRONT ELEVATION BOTTOM PLAN

600 PULL BOX A23 (1)(2)(3)

TOP ACCESS
SCALE 1:20

NOTES:

1. Pull Box shall be fabricated of Nema 4X stainless steel, type 304.
2. Provide pad lock for each pull box.
3. Provide nameplate description.

SHEET NOTES:

(1) For pull box location see drawings E-21, E-21A, E-21B & E-21F.

(2) Contractor shall verify all the dimensions prior to start work.

(3) Provide breather and drain fitting at the bottom of each pull box.

REQUEST FOR INFORMATION NOT ADDRESSED IN THIS CCO REMAIN IN FORCE

MARK	DATE	DESCRIPTIONS	BY	CH'D	CCO#
0	02/25/08	CABLE TRAY CHANGES	TW	RG SE	42S1

REVISIONS

CONTRACT CHANGE ORDER NO._____
SHEET _____ OF _____

DETAILS
UNDERGROUND
PIER W2E PLANS AND SECTIONS

SCALE AS NOTED

E-21C

THIS PLAN IS ACCURATE FOR ELECTRICAL WORK ONLY.

ALL DIMENSIONS ARE IN MILLIMETERS UNLESS OTHERWISE SHOWN.

FOR REDUCED PLANS ORIGINAL SCALE IS IN MILLIMETERS 0 20 40 60 80

DGN FILE =>T:\13103\MS\pse\SAS Struc\CCO\SAS CC042S1\04-0120f1_d104S03.dgn
USERNAME =>llorico

CU 04251 EA 0120F1

LAST REVISION 00-00-00 DATE PLOTTED => 7/11/2008 TIME PLOTTED => 2:06:57 PM

STATE OF CALIFORNIA - DEPARTMENT OF TRANSPORTATION

DESIGN OVERSIGHT BEHZAD GOLEMOHAMMADI

CALCULATED/DESIGNED BY TW DATE 7/07 REVISED BY
CHECKED BY EL 7/07 DATE REVISED

DIST	COUNTY	ROUTE	KILOMETER POST TOTAL PROJECT	SHEET No	TOTAL SHEETS
04	SF	80	13.2/13.9	104 S4	1204

REGISTERED ELECTRICAL ENGINEER 2/22/08 DATE

REGISTERED PROFESSIONAL ENGINEER S. A. ESTOQUE, JR. No. E-10151 Exp. 12/31/2008 ELECTRICAL STATE OF CALIFORNIA

PLANS APPROVAL DATE

PB AMERICAS, Inc.
A Parsons Brinckerhoff Company
303 Second St., Suite 700N
San Francisco, CA 94107-1317

The State of California or its officers or agents shall not be responsible for the accuracy or completeness of electronic copies of this plan sheet.

Caltrans now has a web site! To get to the web site, go to http://www.dot.ca.gov

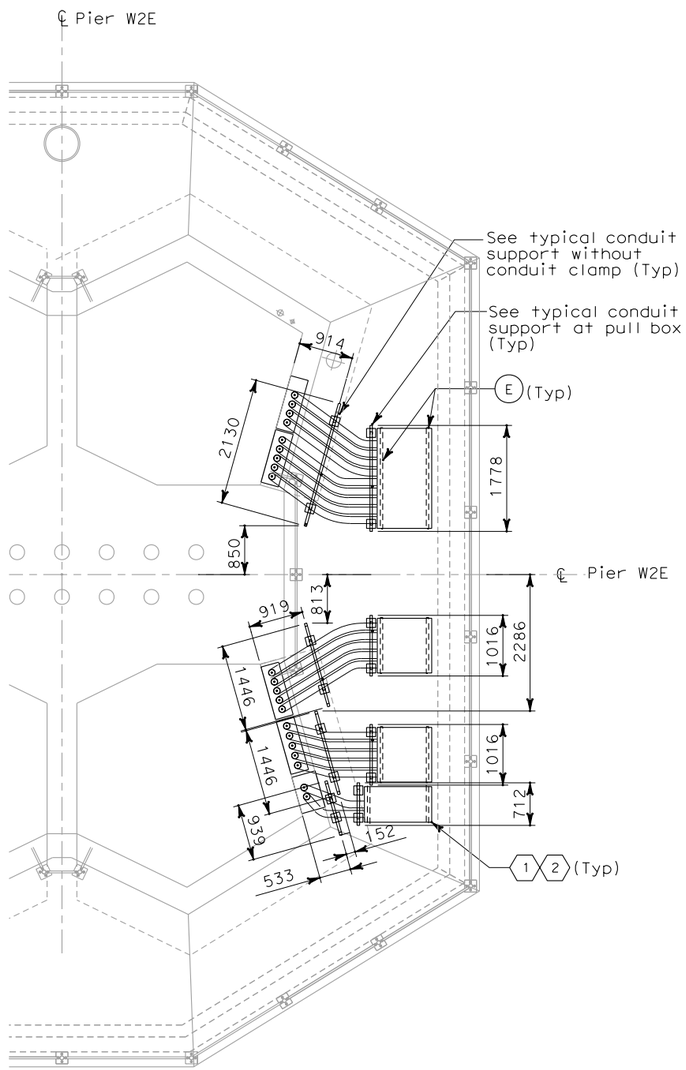

CONDUIT SUPPORT AT GRADE

PLAN AT PIER W2E
SCALE 1:50

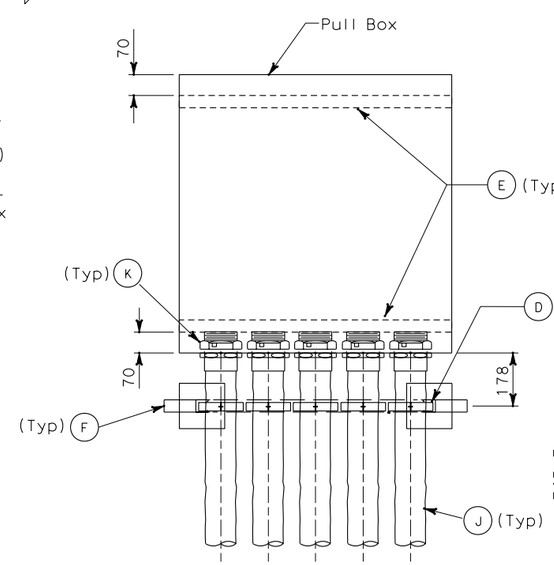

TOP VIEW

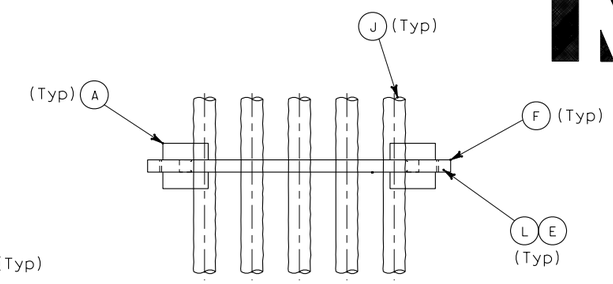

TOP VIEW

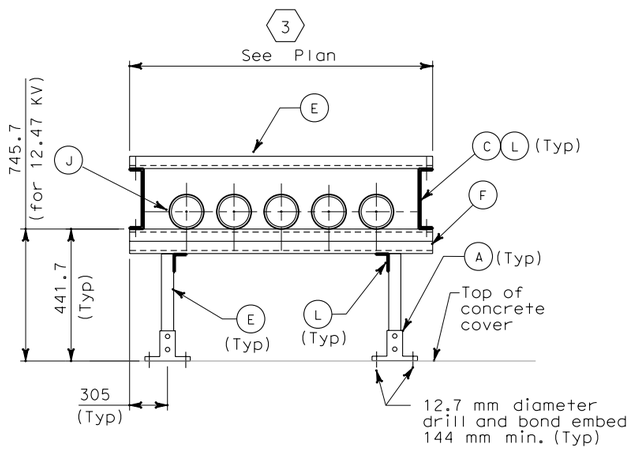

FRONT VIEW

TYPICAL CONDUIT SUPPORT WITHOUT CONDUIT CLAMP

NO SCALE

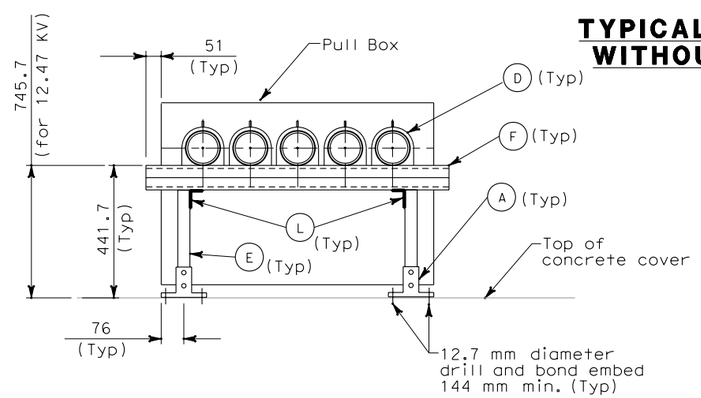

FRONT VIEW

TYPICAL CONDUIT SUPPORT AT PULL BOX

NO SCALE

SHEET NOTES:

1. For pull box sizes and opening see E-21C.
2. For pull box location see E-21.
3. Do not secure flexible conduit at this location.
4. Hardwares and components are for strut channels.

MATERIAL LIST

	Item No.	Description
4	A	Strut Post Base 152 mm x 152 mm.
	B	Not used
4	C	Strut channel spring nut, lockwasher and hex bolt (41mm)
4	D	Strut channel conduit clamp for 103 mm
4	E	Strut channel 41 mm x 41 mm
4	F	Double strut channel 41.3 mm x 82.6 mm
	G	Not used
	H	Not used
	J	Liquidtight flexible metal conduit, 103 mm
	K	Liquidtight Insulated flexible metal conduit connector with insulated grounding bushing for 103 mm conduit
4	L	203 mm U-shape fitting

REQUEST FOR INFORMATION NOT ADDRESSED IN THIS CCO REMAIN IN FORCE

MARK	DATE	DESCRIPTIONS	BY	CH'D	CCO#
0	02/25/08	CABLE TRAY CHANGES	TW	RG SE	42S1

REVISIONS

CONTRACT CHANGE ORDER NO._____
SHEET _____ OF _____

DETAILS
UNDERGROUND
PIER W2E PLANS AND SECTIONS

SCALE AS NOTED

E-21D

DESIGN OVERSIGHT	CALCULATED/ DESIGNED BY	DATE 07/07	REVISED BY	DATE REVISED
BEHZAD GOLEMOHAMMADI	CHECKED BY	TW	EJL	07/07

STATE OF CALIFORNIA - DEPARTMENT OF TRANSPORTATION

Caltrans

THIS PLAN IS ACCURATE FOR ELECTRICAL WORK ONLY.

ALL DIMENSIONS ARE IN MILLIMETERS UNLESS OTHERWISE SHOWN.

FOR REDUCED PLANS ORIGINAL SCALE IS IN MILLIMETERS 0 20 40 60 80

DGN FILE =>T:\13103\MS\pse\SAS Struc\CCO\SAS CCO42S1\04-0120f1_0104S04.dgn
USERNAME =>llorico

CU 04251

EA 0120F1

LAST REVISION 00-00-00

DATE PLOTTED => 7/11/2008
TIME PLOTTED => 2:09:07 PM

DIST	COUNTY	ROUTE	KILOMETER POST TOTAL PROJECT	SHEET No	TOTAL SHEETS
04	SF	80	13.2/13.9	104 S5	1204

REGISTERED ELECTRICAL ENGINEER 2/22/08 DATE

PLANS APPROVAL DATE

REGISTERED PROFESSIONAL ENGINEER S. A. ESTOQUE, JR. No. E-10151 Exp. 12/31/2008 ELECTRICAL STATE OF CALIFORNIA

PB AMERICAS, Inc.
A Parsons Brinckerhoff Company
303 Second St., Suite 700N
San Francisco, CA 94107-1317

The State of California or its officers or agents shall not be responsible for the accuracy or completeness of electronic copies of this plan sheet.

Caltrans now has a web site! To get to the web site, go to http://www.dot.ca.gov

Caltrans Metric

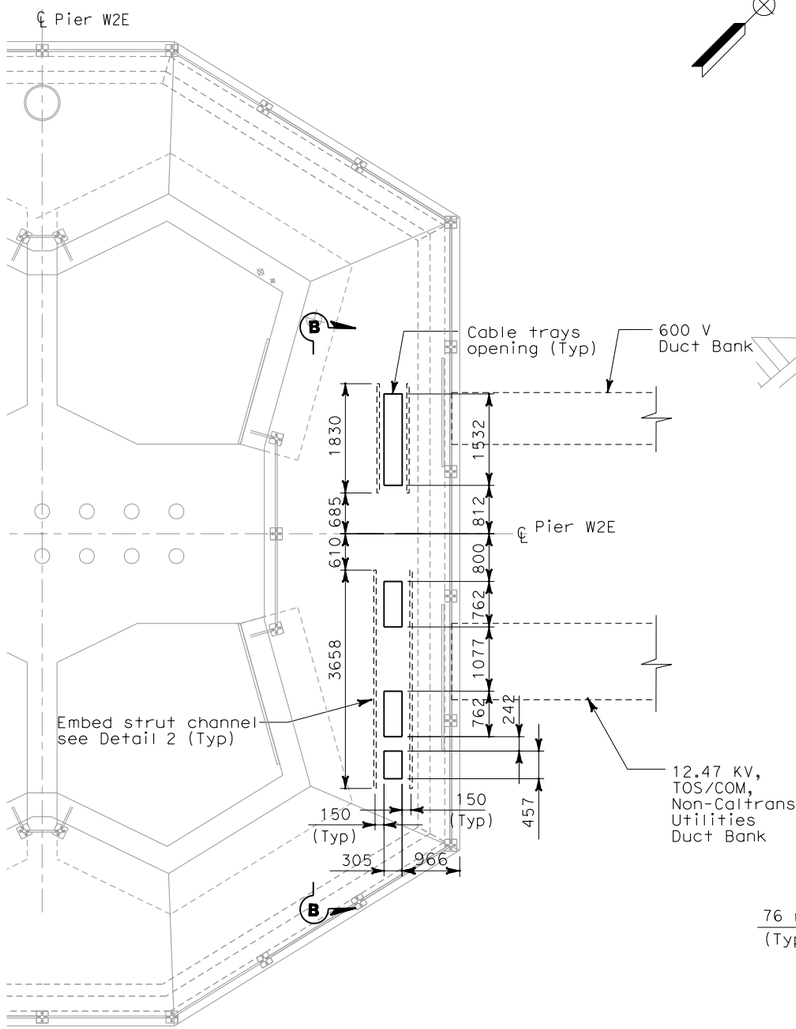

CABLE TRAY OPENING AND CONCRETE INSERT CHANNEL

PLAN AT PIER W2E
SCALE: 1:50

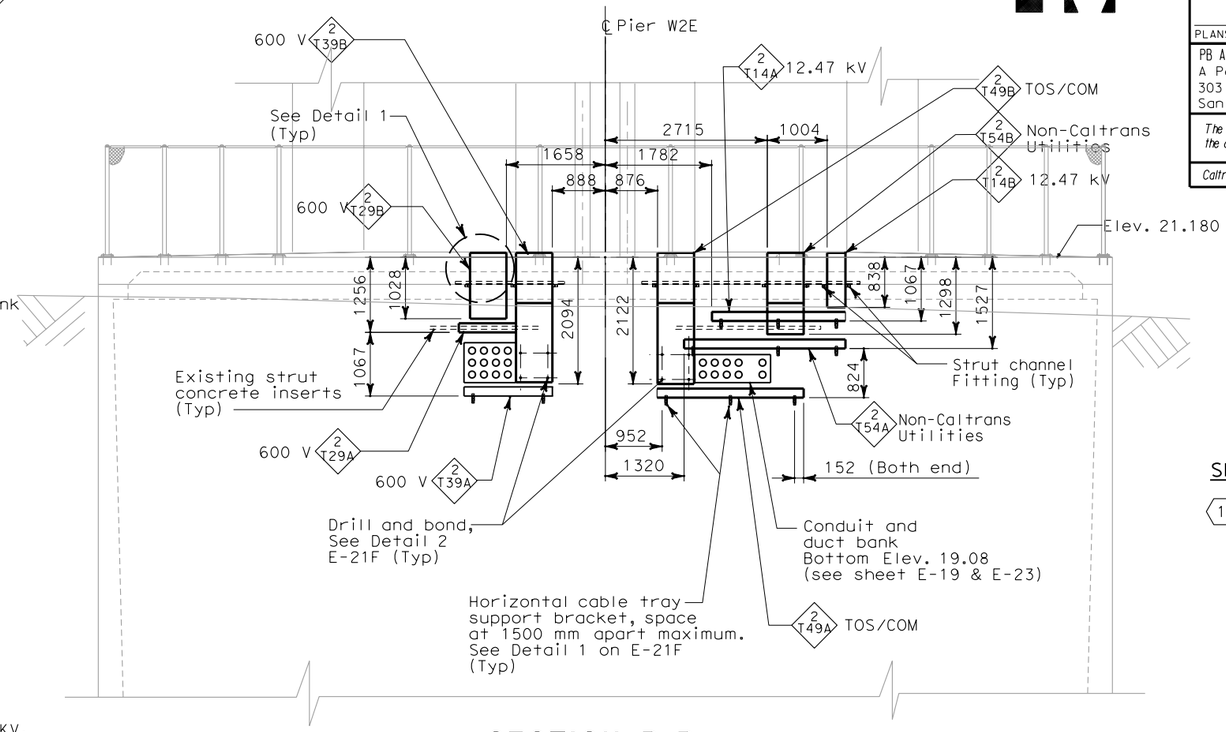

SECTION B-B

SCALE: 1:50

SHEET NOTE:

(1) For fill-in material between cable tray and concrete, See Structures.

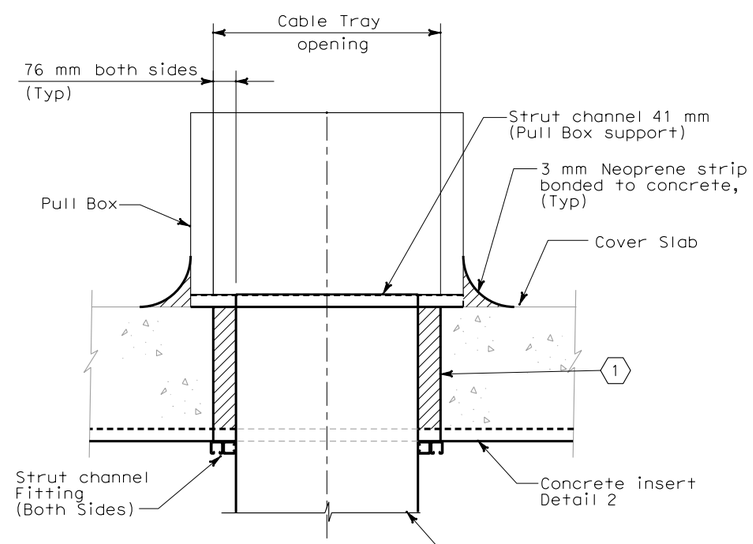

DETAIL 1

SCALE: 1:10

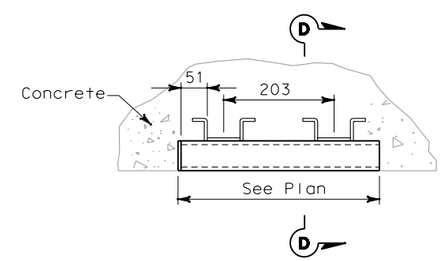

DETAIL 2 CEILING MOUNT

NO SCALE

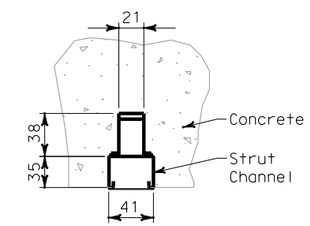

SECTION D-D

NO SCALE

DETAILS
UNDERGROUND
PIER W2E PLANS AND SECTIONS

SCALE AS NOTED

REQUEST FOR INFORMATION NOT ADDRESSED IN THIS CCO REMAIN IN FORCE					
0	02/25/08	CABLE TRAY CHANGES	TW	RG SE	42S1
MARK	DATE	DESCRIPTIONS	BY	CH'D	CCO#
REVISIONS					

CONTRACT CHANGE ORDER NO. _____
SHEET _____ OF _____

THIS PLAN IS ACCURATE FOR ELECTRICAL WORK ONLY.

ALL DIMENSIONS ARE IN MILLIMETERS UNLESS OTHERWISE SHOWN.

DATE	REVISED BY
07/07	TW
07/07	EJL

CALCULATED/DESIGNED BY
CHECKED BY

DESIGN OVERSIGHT
BEHZAD GOLEMOHAMMADI

STATE OF CALIFORNIA - DEPARTMENT OF TRANSPORTATION
Caltrans

E-21E

LAST REVISION 00-00-00
DATE PLOTTED => 7/11/2008
TIME PLOTTED => 2:09:27 PM

FOR REDUCED PLANS ORIGINAL SCALE IS IN MILLIMETERS 0 20 40 60 80

DGN FILE =>T:\13103\MS\pse\SAS Struc\CCO\SAS CCO42S1\04-0120f1_0104S05.dgn
USERNAME =>llorico

CU 04251

EA 0120F1

DIST	COUNTY	ROUTE	KILOMETER POST TOTAL PROJECT	SHEET No	TOTAL SHEETS
04	SF	80	13.2/13.9	104 S6	1204

REGISTERED ELECTRICAL ENGINEER — DATE 2/22/08

PLANS APPROVAL DATE

REGISTERED PROFESSIONAL ENGINEER S. A. ESTOQUE, JR. No. E-10151 Exp. 12/31/2008 ELECTRICAL STATE OF CALIFORNIA

PB AMERICAS, Inc.
A Parsons Brinckerhoff Company
303 Second St., Suite 700N
San Francisco, CA 94107-1317

The State of California or its officers or agents shall not be responsible for the accuracy or completeness of electronic copies of this plan sheet.

Caltrans now has a web site! To get to the web site, go to http://www.dot.ca.gov

Caltrans Metric

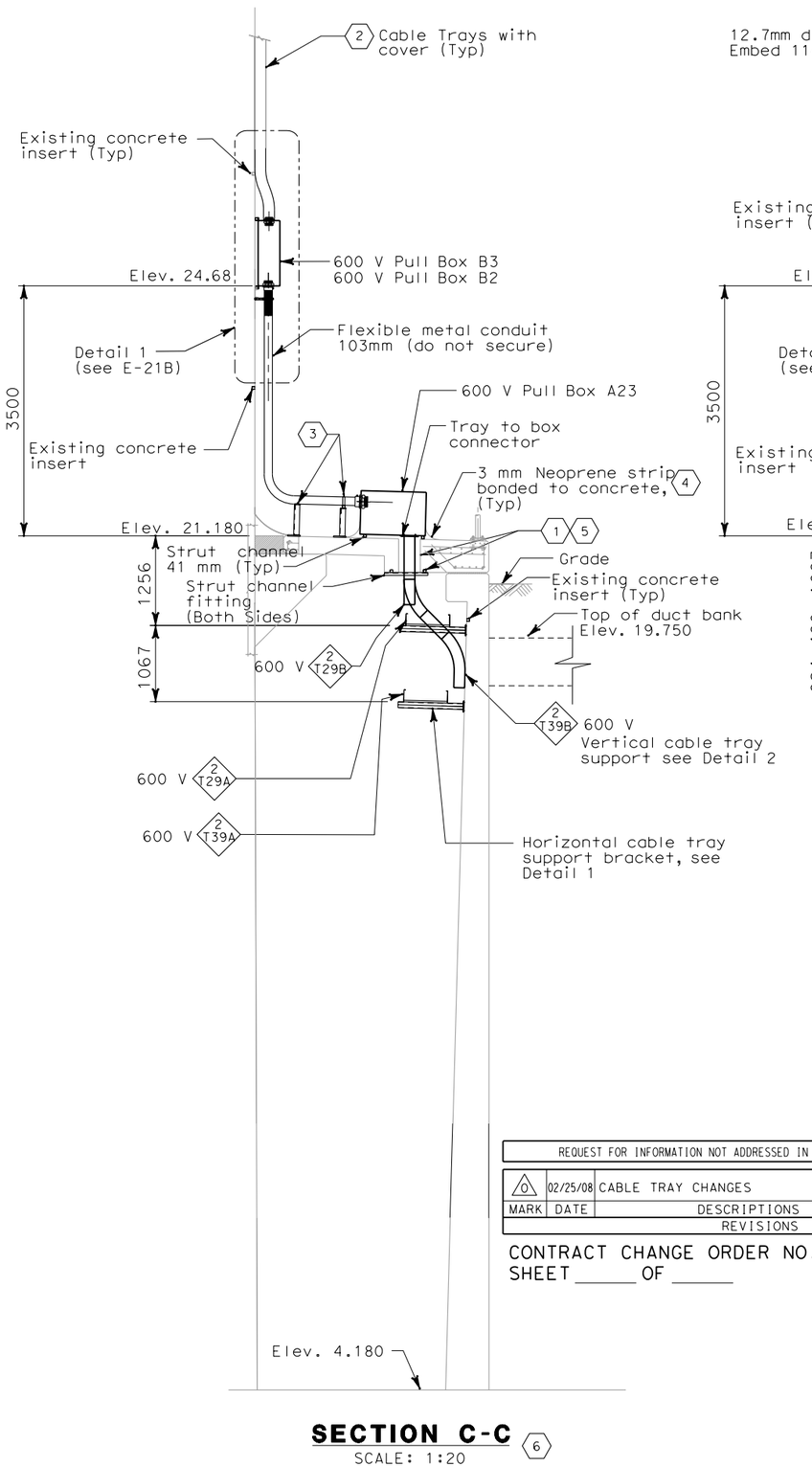

SECTION C-C 6

SCALE: 1:20

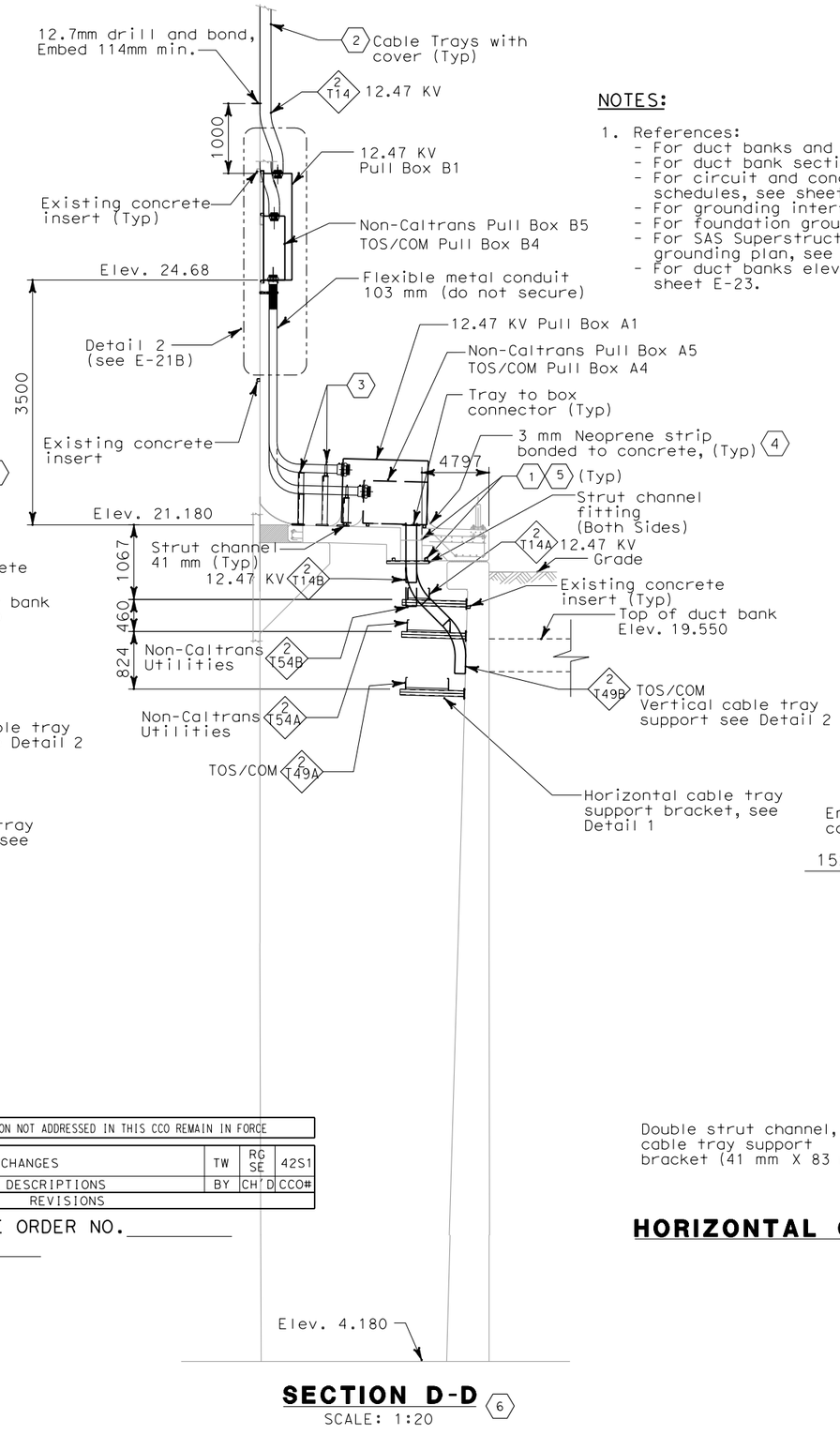

SECTION D-D 6

SCALE: 1:20

NOTES:

1. References:
   - For duct banks and manholes, see sheet E-11.
   - For duct bank sections, see sheet E-19.
   - For circuit and conduit/cable tray schedules, see sheets starting at E-401.
   - For grounding interface, see sheet E-18.
   - For foundation grounding, see sheet E-22.
   - For SAS Superstructure girder eastbound grounding plan, see sheet E-196.
   - For duct banks elevations at W2E, see sheet E-23.

SHEET NOTES:

1. For fill-in material between cable tray and concrete, see Structures.
2. For continuation see E-213.
3. For conduit support see E-21D.
4. The contractor to provide water tight seal after cables are pulled.
5. For embed strut channel and cable tray opening location at pier W2 cover slab see E-21E.
6. Section C-C and D-D see sheet E-21.

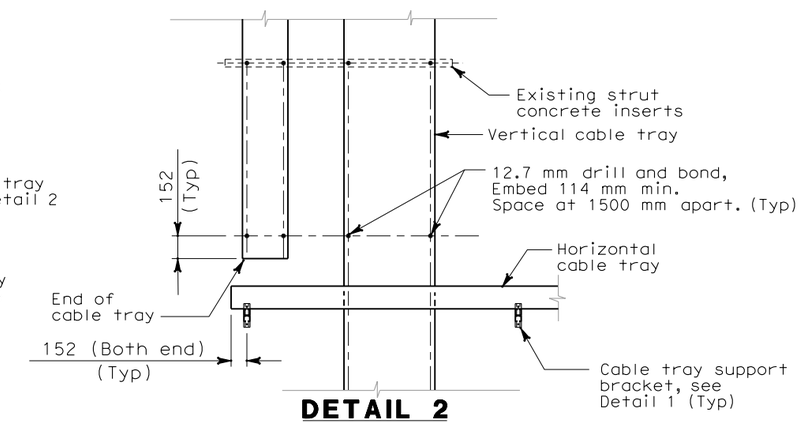

DETAIL 2
VERTICAL CABLE TRAY SUPPORT

NO SCALE

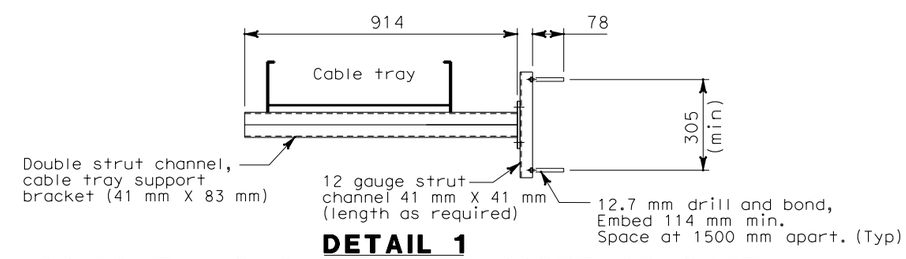

DETAIL 1
HORIZONTAL CABLE TRAY SUPPORT BRACKET

NO SCALE

REQUEST FOR INFORMATION NOT ADDRESSED IN THIS CCO REMAIN IN FORCE					
0	02/25/08	CABLE TRAY CHANGES	TW	RG SE	42S1
MARK	DATE	DESCRIPTIONS	BY	CH'D	CCO#
REVISIONS					

CONTRACT CHANGE ORDER NO._____
SHEET _____ OF _____

DETAILS
UNDERGROUND
PIER W2E PLANS AND SECTIONS

SCALE AS NOTED

E-21F

THIS PLAN IS ACCURATE FOR ELECTRICAL WORK ONLY.

ALL DIMENSIONS ARE IN MILLIMETERS UNLESS OTHERWISE SHOWN.

DATE	BY	REVISED BY	DATE	BY	REVISED
DATE	TW		DATE	EJL	

CALCULATED/DESIGNED BY — CHECKED BY

DESIGN OVERSIGHT — BEHZAD GOLEMOHAMMADI

STATE OF CALIFORNIA - DEPARTMENT OF TRANSPORTATION — Caltrans

LAST REVISION 00-00-00 — DATE PLOTTED => 7/11/2008 — TIME PLOTTED => 2:09:49 PM

DIST	COUNTY	ROUTE	KILOMETER POST TOTAL PROJECT	SHEET No	TOTAL SHEETS
04	SF	80	13.2/13.9	106 R1	1204

12/19/02
REGISTERED ELECTRICAL ENGINEER DATE

12-6-04
PLANS APPROVAL DATE

REGISTERED PROFESSIONAL ENGINEER JENS ERLINGSSON No. 8249 Exp. 9/30/06 ELECTRICAL STATE OF CALIFORNIA

PB POWER, Inc.
A Parsons Brinckerhoff Company
303 Second St., Suite 700N
San Francisco, CA 94107-1317

The State of California or its officers or agents shall not be responsible for the accuracy or completeness of electronic copies of this plan sheet.

Caltrans now has a web site! To get to the web site, go to http://www.dot.ca.gov

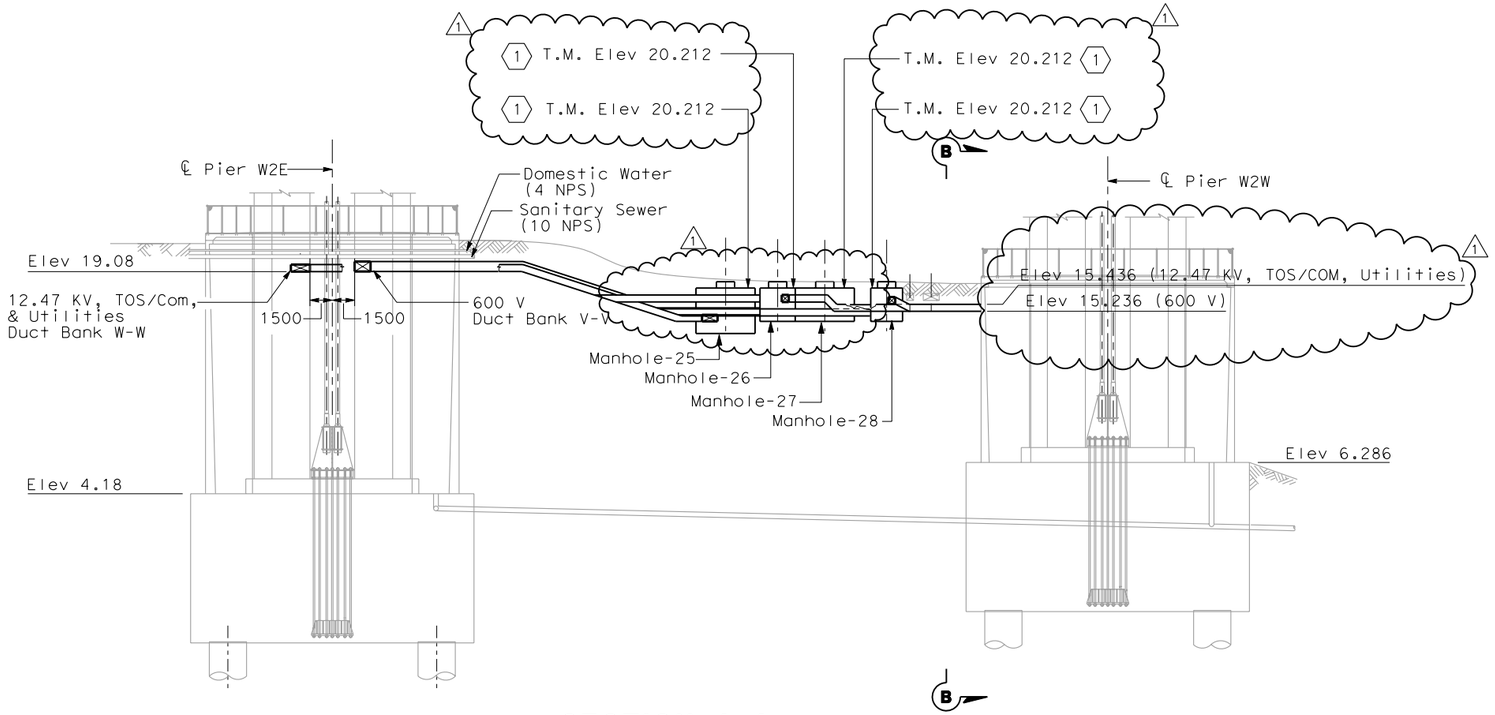

SECTION A-A

(Reference E-11)
SCALE 1:200

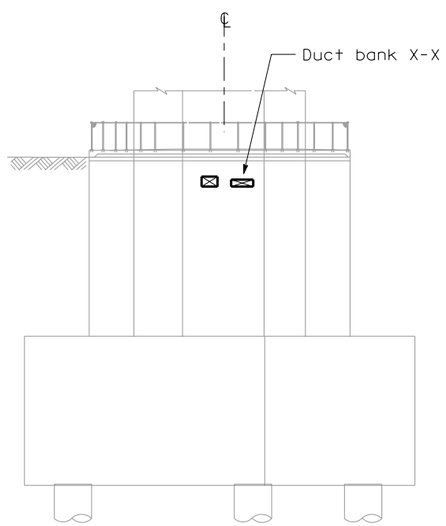

SECTION B-B

SCALE 1:200

SHEET NOTES:

1. Contractor to verify finished grade and may make necessary adjustment to the specified top of manhole elevations and ductbanks to suit field condition.

NOTES:

1. References:
   - For duct banks and sections, see sheet E-11.
   - For typical manhole and duct bank details, see sheet E-17
   - For duct bank sections see sheet E-19
   - For pier W2W sections and plans, see sheet E-20F
   - For pier W2E sections and plans, see sheet E-21F
   - For circuit and conduit/cable tray schedules, see sheets starting at E-401.
2. For other related work, not shown on this sheet, see Electrical Special Provisions.

ABBREVIATION:

T.M. - Top of Manhole

REGISTERED PROFESSIONAL ENGINEER S. A. ESTOQUE, JR. No. E-10151 Exp. 12/31/2008 ELECTRICAL STATE OF CALIFORNIA

FOR REVISION ONLY

REQUEST FOR INFORMATION NOT ADDRESSED IN THIS CCO REMAIN IN FORCE

MARK	DATE	DESCRIPTIONS	BY	CH'D	CCO#
1	02/25/08	CABLE TRAY CHANGES	TW	RG SE	42S1

REVISIONS

CONTRACT CHANGE ORDER NO._____
SHEET _____ OF _____

DETAILS
UNDERGROUND DUCT BANK SECTIONS

SCALE 1:200

E-23

THIS PLAN IS ACCURATE FOR ELECTRICAL WORK ONLY.

ALL DIMENSIONS ARE IN MILLIMETERS UNLESS OTHERWISE SHOWN

DATE	REVISED BY	CALCULATED/ DESIGNED BY	DESIGN OVERSIGHT
11/04	AB	CHECKED BY	BEHZAD GOLEMOHAMMADI
--/--	--		

DATE REVISED

STATE OF CALIFORNIA - DEPARTMENT OF TRANSPORTATION
Caltrans

FOR REDUCED PLANS ORIGINAL SCALE IS IN MILLIMETERS 0 20 40 60 80

DGN FILE =>T:\13103\MS\pse\SAS Struc\CCO\SAS CCO42S1\04-0120f1_0106R01.dgn
USERNAME =>llorico

CU 04251

EA 0120F1

LAST REVISION 00-00-00
DATE PLOTTED => 7/11/2008
TIME PLOTTED => 2:10:18 PM

DIST	COUNTY	ROUTE	KILOMETER POST TOTAL PROJECT	SHEET No	TOTAL SHEETS
04	SF	80	13.2/13.9	140 R1	1204

Jens Erlingsson 12/19/02
REGISTERED ELECTRICAL ENGINEER DATE

12-6-04
PLANS APPROVAL DATE

REGISTERED PROFESSIONAL ENGINEER JENS ERLINGSSON No. 8249 Exp. 9/30/06 ELECTRICAL STATE OF CALIFORNIA

PB POWER, Inc.
A Parsons Brinckerhoff Company
303 Second St., Suite 700N
San Francisco, CA 94107-1317

The State of California or its officers or agents shall not be responsible for the accuracy or completeness of electronic copies of this plan sheet.

Caltrans now has a web site! To get to the web site, go to http://www.dot.ca.gov

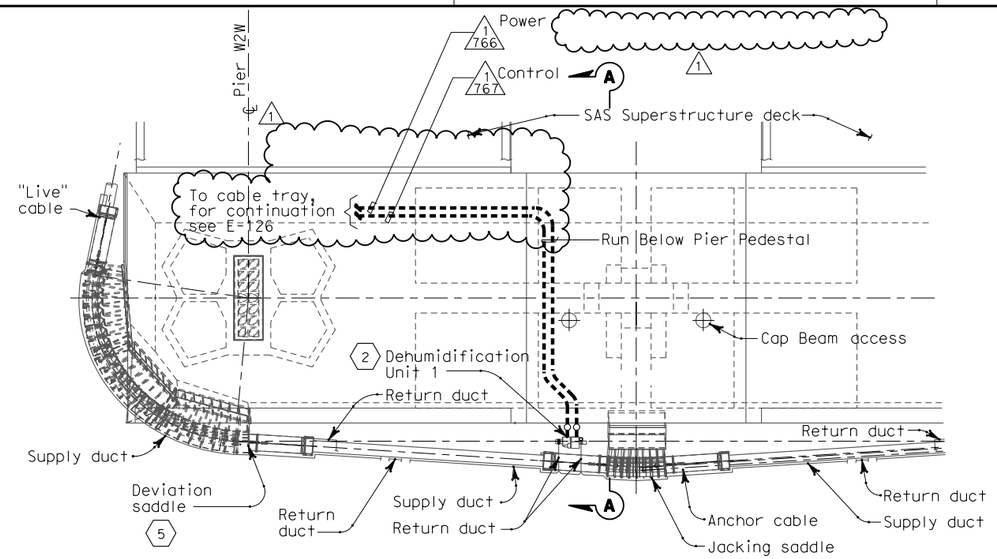

DEHUMIDIFICATION PLAN
NO SCALE

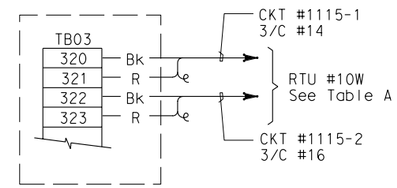

DEHUMIDIFICATION CONTROLLER
SHOWN FOR DEHUMIDIFICATION UNIT #1
FOR OTHER UNITS, SEE TABLE A

REGISTERED PROFESSIONAL ENGINEER S. A. ESTOQUE, JR. No. E-10151 Exp. 12/31/2008 ELECTRICAL STATE OF CALIFORNIA

FOR REVISION ONLY

REQUEST FOR INFORMATION NOT ADDRESSED IN THIS CCO REMAIN IN FORCE

MARK	DATE	DESCRIPTIONS	BY	CH'D	CCO#
1	02/25/08	CABLE TRAY CHANGES	TW	RG SE	42S1

REVISIONS

CONTRACT CHANGE ORDER NO._____
SHEET _____ OF _____

SHEET NOTES:

1. Route power and control conduits and cables from dehumidifier to 600 V cable tray #1T29 for circuits #1115, 1115-1 and 1115-2.
2. Dehumidification Unit 1 is 480 V, 3 phase, 16 kW (estimated load) with integral circuit breaker disconnect.
3. Final connections to dehumidifier shall be liquid tight flexible metal conduit.
4. Type PB-2E junction box (203 x 203 x 102) see pull box schedule sheet E-83.
5. Views of Deviation Saddle are for illustration only. For Deviation Saddle details, see "West Deviation Saddle Details" sheets.

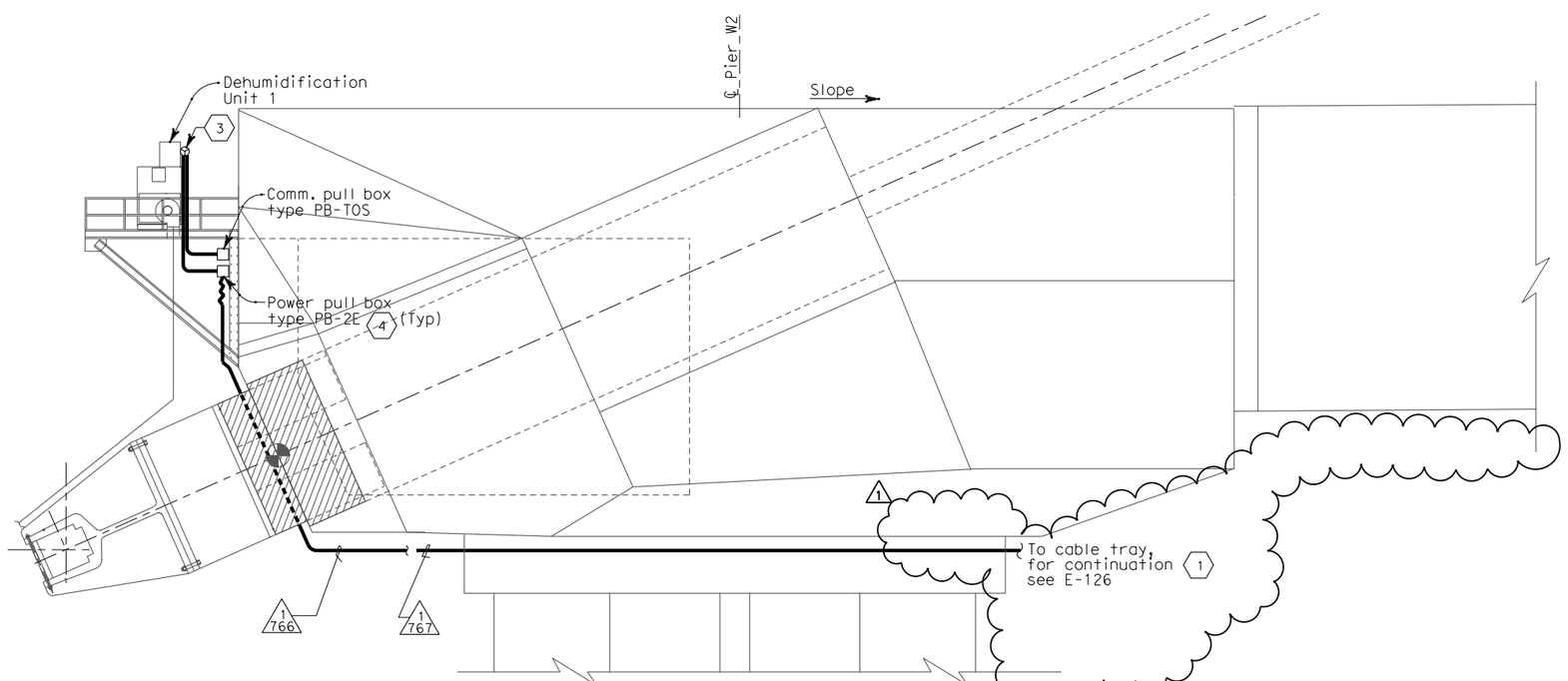

SECTION A-A
NO SCALE

NOTES:

1. References:
   - See sheets M001 through M011 for dehumidifier plans and details.
   - See sheet E-29 for dehumidifier single line diagram (circuit #1115).

TABLE A

EQUIPMENT	CIRCUIT NO.	RTU CAB.	DWG NO.
Dehumidification Unit #1	1115-1 1115-2	RTU #10W RTU #10W	E-330 E-330
Dehumidification Unit #2	2120-1 2120-2	RTU #10E RTU #10E	E-331 E-331
Dehumidification Unit #3	1117-1 1117-2	RTU #11W RTU #11W	E-332 E-332
Dehumidification Unit #4	1118-1 1118-2	RTU #11W RTU #11W	E-332 E-332
Dehumidification Unit #5	2121-1 2121-2	RTU #10E RTU #10E	E-331 E-331

DETAILS
SAS SUPERSTRUCTURE ROADWAY WESTBOUND DEHUMIDIFIER UNIT 1
SCALE AS NOTED

E-79

REVISED BY	DATE REVISED
KG	12/01
FK	12/01

CALCULATED/DESIGNED BY
CHECKED BY

DESIGN OVERSIGHT
BEHZAD GOLEMOHAMMADI

STATE OF CALIFORNIA - DEPARTMENT OF TRANSPORTATION
Caltrans

THIS PLAN ACCURATE FOR ELECTRICAL WORK ONLY.

LAST REVISION 00-00-00
DATE PLOTTED => 7/11/2008
TIME PLOTTED => 2:30:10 PM

FOR REDUCED PLANS ORIGINAL SCALE IS IN MILLIMETERS 0 20 40 60 80

DGN FILE =>T:\13103\MS\pse\SAS Struc\CCO\SAS CCO42S1\04-0120f1_0140R01.dgn
USERNAME =>llorico

CU 04251

EA 0120F1

DIST	COUNTY	ROUTE	KILOMETER POST TOTAL PROJECT	SHEET No.	TOTAL SHEETS
04	SF	80	13.2/13.9	149 R2	1204

REGISTERED ELECTRICAL ENGINEER 12/19/02 DATE

12-6-04
PLANS APPROVAL DATE

PB POWER, Inc.
A Parsons Brinckerhoff Company
303 Second St., Suite 700N
San Francisco, CA 94107-1317

REGISTERED PROFESSIONAL ENGINEER JENS ERLINGSSON No. 8249 Exp. 9/30/06 ELECTRICAL STATE OF CALIFORNIA

The State of California or its officers or agents shall not be responsible for the accuracy or completeness of electronic copies of this plan sheet.

Caltrans now has a web site! To get to the web site, go to http://www.dot.ca.gov

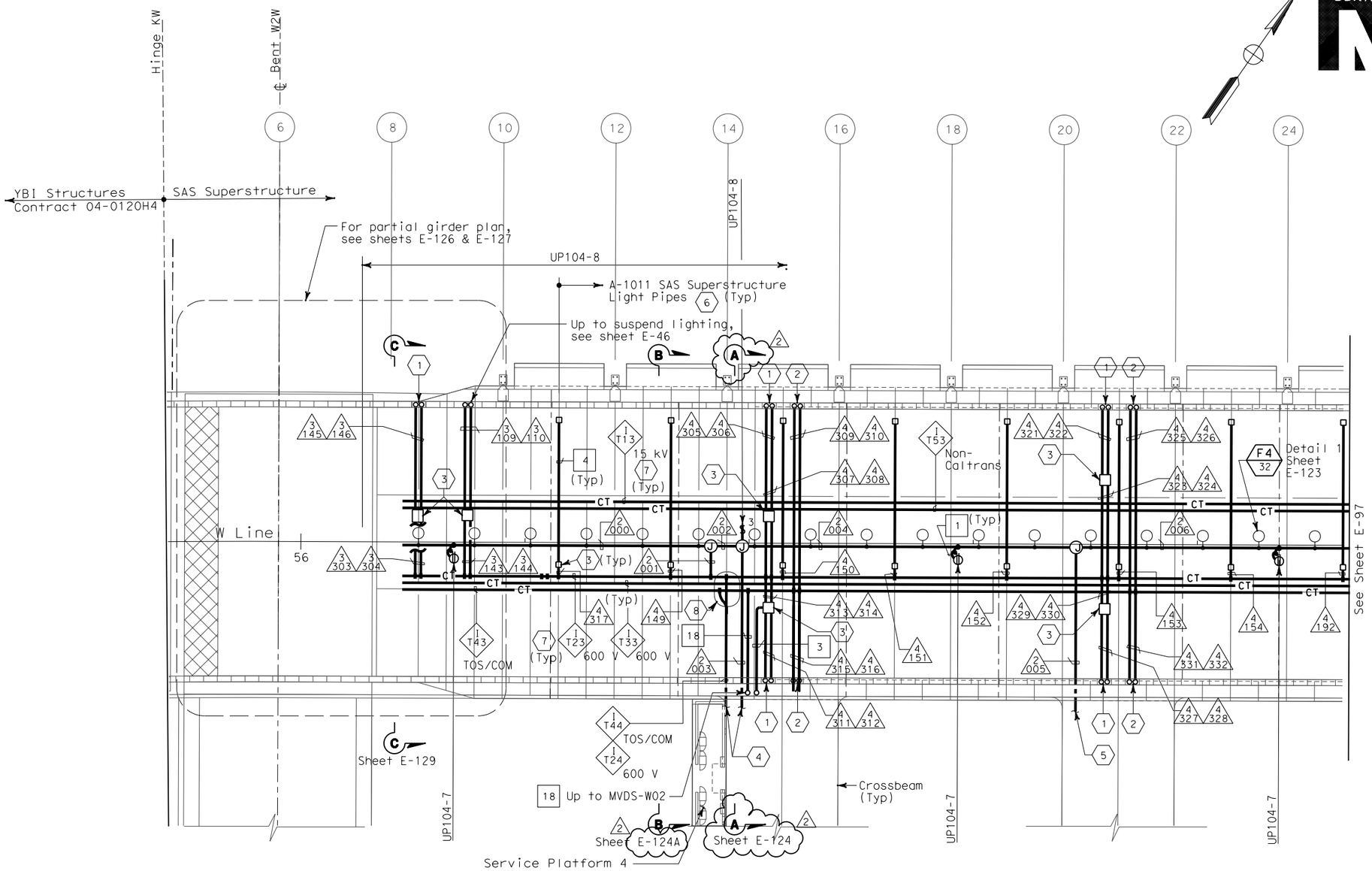

SAS SUPERSTRUCTURE - CONDUIT AND CABLE TRAY PLAN

SHEET NOTES:

1. Conduit up to PB-LTG located in barrier, see sheet E-46.
2. Conduit up to PB-COM located in barrier, see sheet E-46.
3. PB-2A locate on top of floor.
4. For cable tray run and lighting inside crossbeam, see sheet E-114.
5. For lighting inside crossbeam, see sheet E-119.
6. PB-2L with circuit for future light pipes. See sheet E-121 for installation details and E-130 for lighting schedule.
7. For cable tray & ground bar support, refer to sheet E-125.
8. For fiber splice tray detail, refer to sheet E-356.

NOTES:

1. References:
   - TOS equipment is shown for conduit routing only. For typical details of TOS controller and devices, see sheets E-344 through E-357.
   - For types of pull boxes, splice boxes and enclosures, see sheet E-83.
   - For bridge grounding plan, see sheet E-111.
   - For circuit and conduit/cable tray schedules, see sheets starting at E-401.
2. For other work related to Hinge KW and items not shown on this sheet, see Electrical Special Provisions.
3. The girder lighting fixtures are shown diagrammatically.Contractor shall install fixtures at railing posts with a maximum of 8000 mm between fixtures. For types and typical lighting fixture installation details, see sheet E-123.
4. The cable trays are shown diagrammatically. For typical girder cable tray plans and sections, see sheets E-124 and E-125.

REGISTERED PROFESSIONAL ENGINEER FADI WALIEDDINE No. 11465 Exp. 12/31/2009 ELECTRICAL STATE OF CALIFORNIA

FOR REVISION ONLY

REQUEST FOR INFORMATION NOT ADDRESSED IN THIS CCO REMAIN IN FORCE

MARK	DATE	DESCRIPTIONS	BY	CH'D	CCO#
2	02/25/08	CABLE TRAY CHANGES	RG	FW	42S1
1	02/19/08	ELECTRICAL MODIFICATIONS	MP EL	RR	42

REVISIONS

CONTRACT CHANGE ORDER NO._____
SHEET _____ OF _____

SAS SUPERSTRUCTURE GIRDER WESTBOUND
LIGHTING AND ELECTRICAL SYSTEMS

SCALE 1:200

THIS PLAN IS ACCURATE FOR ELECTRICAL WORK ONLY.

ALL DIMENSIONS ARE IN MILLIMETERS UNLESS OTHERWISE SHOWN.

E-96

DATE	REVISED BY	DATE	REVISED
8/02	FK	8/02	IAH

CALCULATED/DESIGNED BY — CHECKED BY

DESIGN OVERSIGHT — BEHZAD GOLEMOHAMMADI

STATE OF CALIFORNIA - DEPARTMENT OF TRANSPORTATION — Caltrans

LAST REVISION 00-00-00 — DATE PLOTTED => 7/11/2008 TIME PLOTTED => 2:30:38 PM

FOR REDUCED PLANS ORIGINAL SCALE IS IN MILLIMETERS 0 20 40 60 80

DGN FILE =>T:\13103\MS\pse\SAS Struc\CCO\SAS CCO42S1\04-0120f1_0149R02.dgn
USERNAME =>llorico

CU 04251 — EA 0120F1

DIST	COUNTY	ROUTE	KILOMETER POST TOTAL PROJECT	SHEET No	TOTAL SHEETS
04	SF	80	13.2/13.9	154 R2	1204

REGISTERED ELECTRICAL ENGINEER 12/19/02 DATE

12-6-04
PLANS APPROVAL DATE

REGISTERED PROFESSIONAL ENGINEER JENS ERLINGSSON No. 8249 Exp. 9/30/06 ELECTRICAL STATE OF CALIFORNIA

PB POWER, Inc.
A Parsons Brinckerhoff Company
303 Second St., Suite 700N
San Francisco, CA 94107-1317

The State of California or its officers or agents shall not be responsible for the accuracy or completeness of electronic copies of this plan sheet.

Caltrans now has a web site! To get to the web site, go to http://www.dot.ca.gov

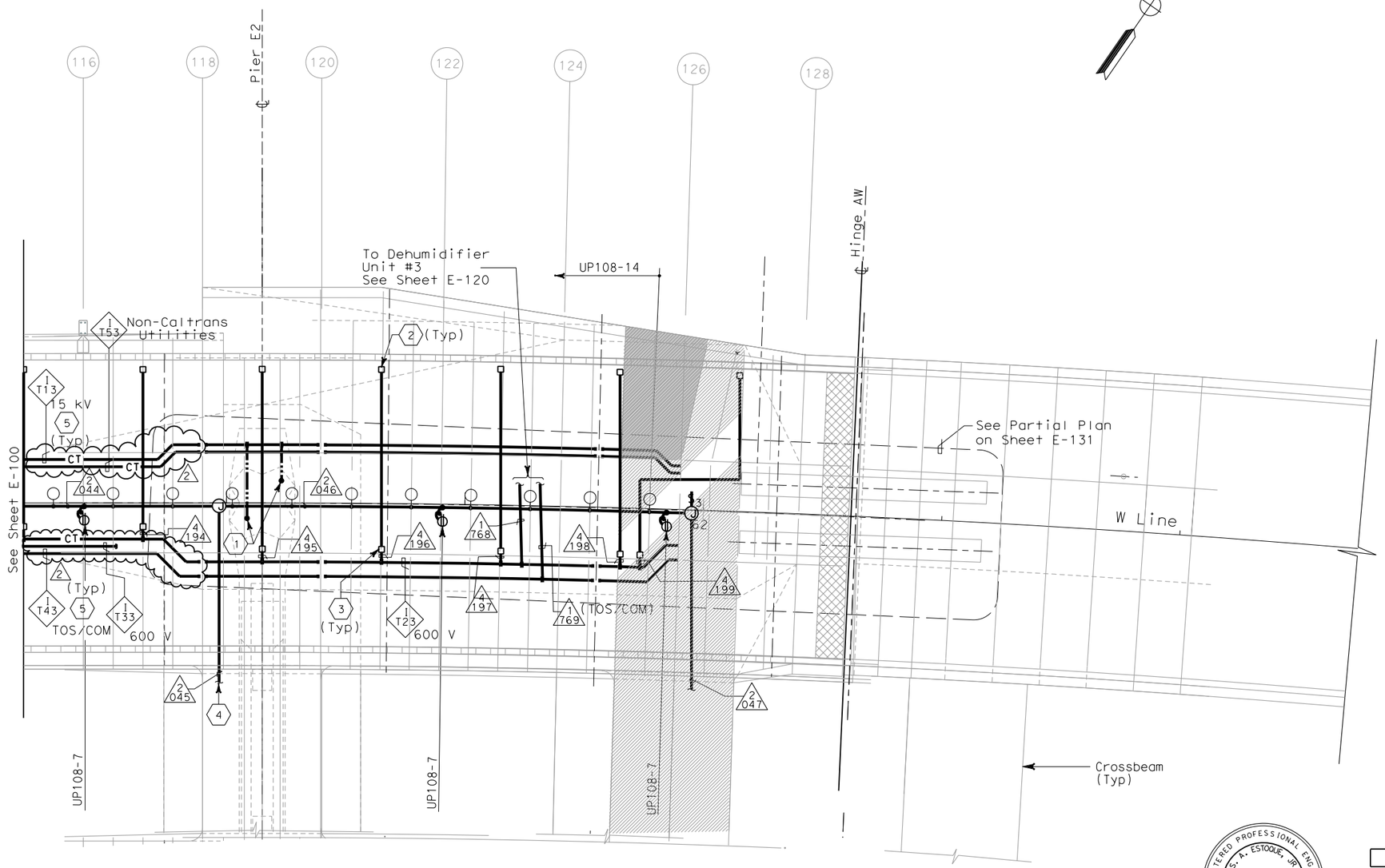

SHEET NOTES:

1. 250 kcmil bare copper grounding conductor exothermically welded to 500 kcmil system ground conductor. See E2/T1 structures EA-0120E1 for limit of work.
2. PB-2L with circuit for future light pipes.
3. PB-2A, locate on top of floor.
4. For lighting inside crossbeam, see sheet E-119.
5. For cable tray & ground bar support, refer to sheet E-125.

NOTES:

1. References:
   - TOS equipment is shown for conduit routing only. For typical details of TOS controller and devices, see sheets E-344 through E-361.
   - For types of pull boxes, splice boxes and enclosures, see sheet E-83.
   - For bridge grounding plan, see sheet E-111.
   - For circuit and conduit/cable tray schedules, see sheets starting at E-401.
2. For other work related to Hinge AW and items not shown on this sheet, see Electrical Special Provisions.
3. The girder lighting fixtures are shown diagrammatically. Contractor shall install fixtures at railing posts with a maximum of 8000 mm between fixtures. For types and typical lighting fixture installation details, see sheet E-123.
4. The cable trays are shown diagrammatically. For typical girder cable tray plans and sections, see sheets E-124 and E-125.

REGISTERED PROFESSIONAL ENGINEER S. A. ESTOQUE, JR. No. E-10151 Exp. 12/31/2008 ELECTRICAL STATE OF CALIFORNIA

FOR REVISION ONLY

REQUEST FOR INFORMATION NOT ADDRESSED IN THIS CCO REMAIN IN FORCE

MARK	DATE	DESCRIPTIONS	BY	CH'D	CCO#
2	02/25/08	CABLE TRAY CHANGES	MP	RG SE	42S1
1	02/19/08	ELECTRICAL MODIFICATIONS	MP EL	RR	42

REVISIONS

CONTRACT CHANGE ORDER NO. _____
SHEET _____ OF _____

SAS SUPERSTRUCTURE - CONDUIT AND CABLE TRAY PLAN

SAS SUPERSTRUCTURE GIRDER WESTBOUND
LIGHTING AND ELECTRICAL SYSTEMS

SCALE 1:200

E-101

THIS PLAN IS ACCURATE FOR ELECTRICAL WORK ONLY.

STATE OF CALIFORNIA - DEPARTMENT OF TRANSPORTATION
Caltrans

DESIGN OVERSIGHT: BEHZAD GOLEMOHAMMADI

CALCULATED/DESIGNED BY: FK
CHECKED BY: IAH
DATE: REVISED BY: DATE REVISED:

LAST REVISION 00-00-00
DATE PLOTTED => 7/11/2008
TIME PLOTTED => 2:36:27 PM

FOR REDUCED PLANS ORIGINAL SCALE IS IN MILLIMETERS 0 20 40 60 80

DGN FILE =>T:\13103\MS\pse\SAS Struc\CCO\SAS CCO42S1\CCO 42S1 Final Submittal 2008-07-11\04-0120F1_0154R02.dgn
USERNAME =>llorico

CU 04251 EA 0120F1

DIST	COUNTY	ROUTE	KILOMETER POST TOTAL PROJECT	SHEET No	TOTAL SHEETS
04	SF	80	13.2/13.9	155 R1	1204

Caltrans Metric

2/6/04
REGISTERED ELECTRICAL ENGINEER DATE

12-6-04
PLANS APPROVAL DATE

REGISTERED PROFESSIONAL ENGINEER
JENS ERLINGSSON
No. 8249
Exp. 9/30/06
ELECTRICAL
STATE OF CALIFORNIA

PB POWER, Inc.
A Parsons Brinckerhoff Company
303 Second St., Suite 700N
San Francisco, CA 94107-1317

The State of California or its officers or agents shall not be responsible for the accuracy or completeness of electronic copies of this plan sheet.

Caltrans now has a web site! To get to the web site, go to http://www.dot.ca.gov

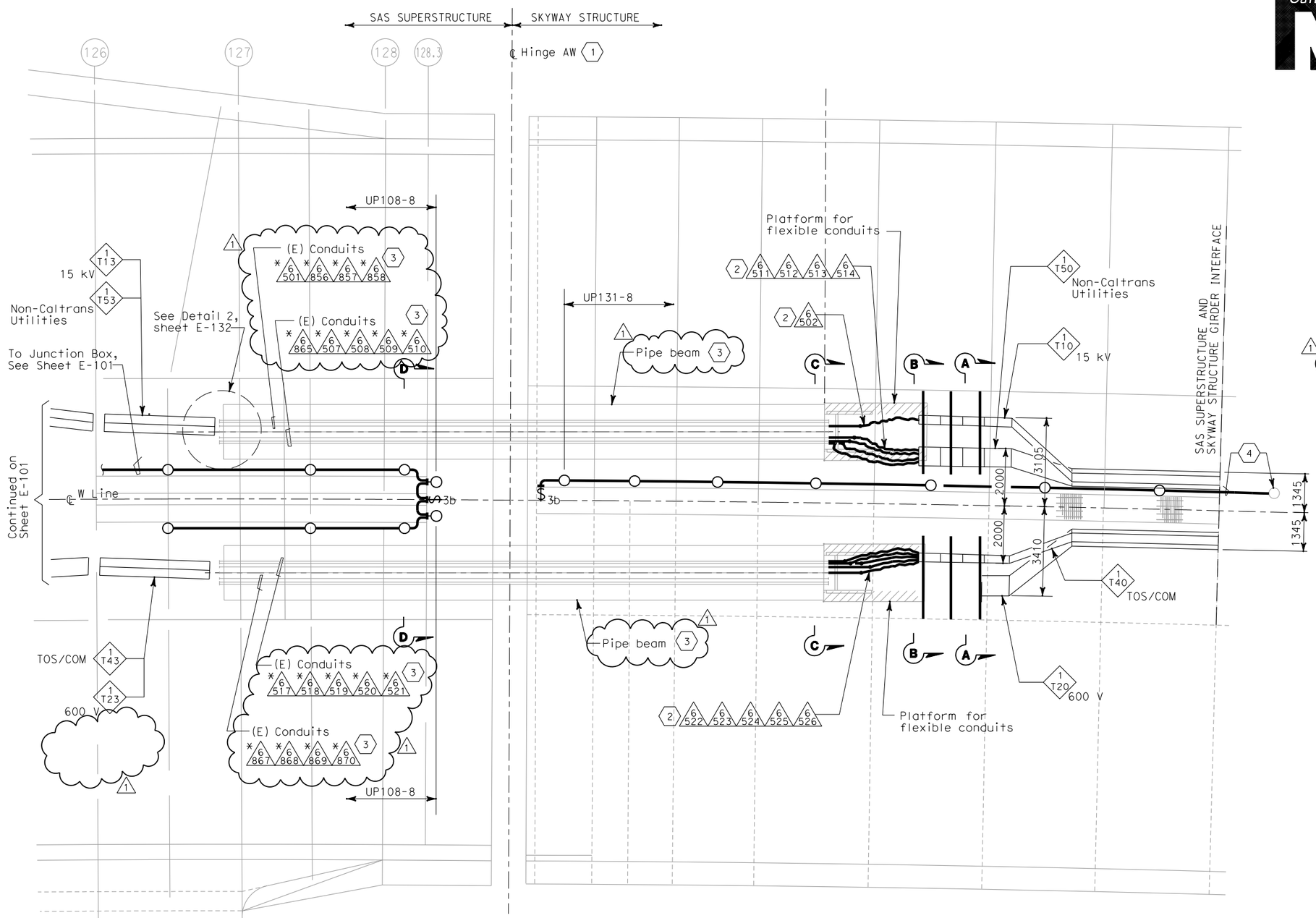

SHEET NOTES:

1. Hinge AW electrical design is based on the maximum expansion joint movement opening of 1243 mm.
2. Arrange and group the flexible 103 mm conduits to maintain a minimum voltage level separation of 460 mm between systems.
3. Existing conduits (*) inside pipe beam are supplied in Skyway contract.
4. Terminate conduit to the next lighting fixture and splice wiring to circuit UP131-8 of Skyway Structure. Contractor to adjust as required.

NOTES:

1. Minimum radius of cable tray fittings shall be 610 mm.
2. Minimum radius of 103 mm conduit bends shall be 610 mm.
3. Cables/circuits passing through the hinge locations shall be provided with cable identification tag at both ends of Hinge.
4. For additional work related not shown on this drawing, see Electrical Special Provisions.
5. Section A-A and B-B see sheet E-132B.
6. Section C-C and Section D-D, see sheet E-132C.

PLAN

SCALE: 1:75

REGISTERED PROFESSIONAL ENGINEER
S. A. ESTOQUE, JR
No. E-10151
Exp. 12/31/2008
ELECTRICAL
STATE OF CALIFORNIA

FOR REVISION ONLY

REQUEST FOR INFORMATION NOT ADDRESSED IN THIS CCO REMAIN IN FORCE

MARK	DATE	DESCRIPTIONS	BY	CH'D	CCO#
1	02/25/08	CABLE TRAY CHANGES	JD	RG SE	42S1

REVISIONS

CONTRACT CHANGE ORDER NO._____
SHEET _____ OF _____

SAS SUPERSTRUCTURE AND SKYWAY STRUCTURE
GIRDER INTERFACE WESTBOUND

AS NOTED

E-101A

THIS PLAN IS ACCURATE FOR ELECTRICAL WORK ONLY.

ALL DIMENSIONS ARE IN MILLIMETERS UNLESS OTHERWISE SHOWN

FOR REDUCED PLANS ORIGINAL SCALE IS IN MILLIMETERS 0 20 40 60 80

DGN FILE =>T:\13103\MS\pse\SAS Struc\CCO\SAS CC042S1\CCO 42S1 Final Submittal 2008-07-11\04-0120f1_0155R01.dgn
USERNAME =>llorico
CU 04251
EA 0120F1

STATE OF CALIFORNIA - DEPARTMENT OF TRANSPORTATION
Caltrans

DESIGN OVERSIGHT: BEHZAD GOLEMOHAMMADI

CALCULATED/ DESIGNED BY	CYF	DATE 12/03	REVISED BY	EJL
CHECKED BY	EJL	1/04	DATE REVISED	2/04

LAST REVISION 00-00-00
DATE PLOTTED => 7/11/2008
TIME PLOTTED => 2:43:02 PM

DIST	COUNTY	ROUTE	KILOMETER POST TOTAL PROJECT	SHEET No	TOTAL SHEETS
04	SF	80	13.2/13.9	174 R1	1204

12/19/02
REGISTERED ELECTRICAL ENGINEER DATE

12-6-04
PLANS APPROVAL DATE

REGISTERED PROFESSIONAL ENGINEER JENS ERLINGSSON No. 8249 Exp. 9/30/06 ELECTRICAL STATE OF CALIFORNIA

PB POWER, Inc.
A Parsons Brinckerhoff Company
303 Second St., Suite 700N
San Francisco, CA 94107-1317

The State of California or its officers or agents shall not be responsible for the accuracy or completeness of electronic copies of this plan sheet.

Caltrans now has a web site! To get to the web site, go to http://www.dot.ca.gov

REGISTERED PROFESSIONAL ENGINEER S. A. ESTOQUE, JR No. E-10151 Exp. 12/31/2008 ELECTRICAL STATE OF CALIFORNIA

FOR REVISION ONLY

REQUEST FOR INFORMATION NOT ADDRESSED IN THIS CCO REMAIN IN FORCE

MARK	DATE	DESCRIPTIONS	BY	CH'D	CCO#
1	02/25/08	CABLE TRAY CHANGES	RG	SE	42S1

REVISIONS

CONTRACT CHANGE ORDER NO._____
SHEET _____ OF _____

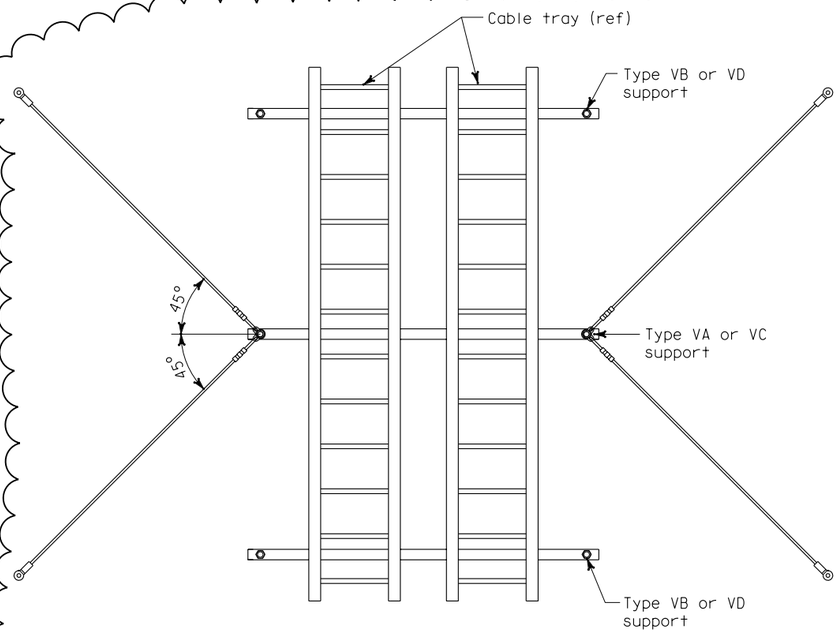

PLAN VIEW - CABLE TRAY SUPPORTS

MATERIAL LIST

Item No.	Description	Type VA thru VE
A	Deleted	
B	Deleted	
C	Threaded steel hanger rod, 13 mm diameter	X
D	Strut channel spring nut, lock washer and hex bolt	X
E	Hold down clamp Cooper B-Line #9SS6-1205 or equal	X
F	Strut hanger trapeze hardware kit	X
G	Heavy duty hold down clamp Cooper B-Line #9SS6-1241 or equal	
H	Deleted	
J	Rod hanger expansion anchor, 13 mm dia, 100 mm minimum depth embedment and allowable load (in tension) of 4.45 kN	X
K	Deleted	
L	Deleted	
M	Rod hanger seismic bracing kit (includes 4-stake eyes, 4-oval sleeves, 4-URC clips and 4-3048mm long wire cables) PW Industries part no. PW18-C26-10/C-SP-316SS or equal	X
N	Strut channel, 41 mm x 82 mm (Double)	X
P	Expansion/sleeve anchors 13 mm dia x 76 mm long hex type	X
Q	Flat washer 13 mm dia bolt size	X
R	Deleted	
S	Threaded rod (13 mm) with stiffener & stiffener clips	X
T	Rod coupler, hex nut and washer for expansion anchor	X
U	Deleted	
V	Deleted	
W	Deleted	

NOTES:

- For typical cable tray attachment details, see E-122A.

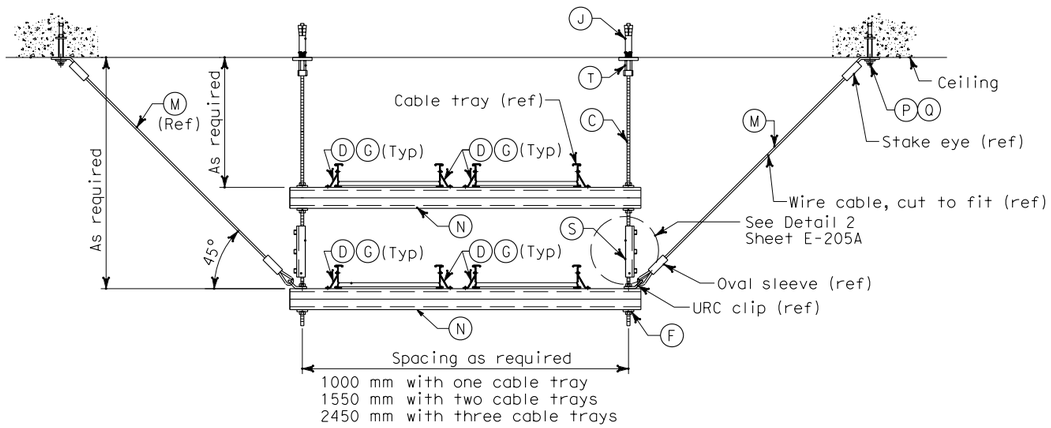

TYPE VC CABLE TRAY SUPPORT ELEVATION

TYPE VD CABLE TRAY SUPPORT ELEVATION WITHOUT (ITEM M) SEISMIC BRACING KIT

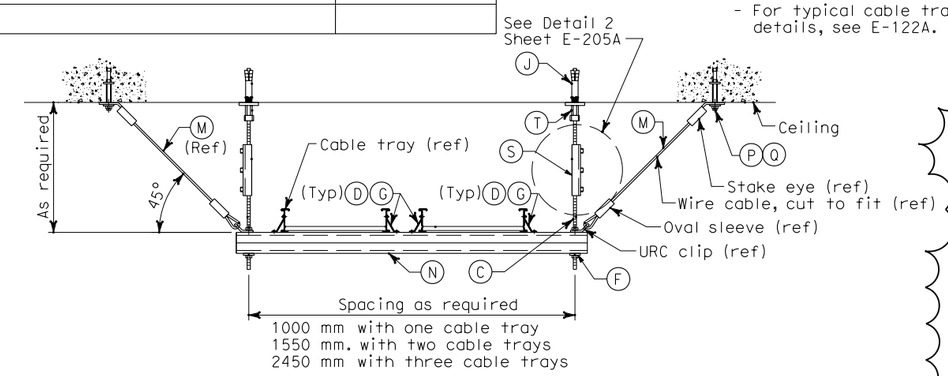

TYPE VA CABLE TRAY SUPPORT ELEVATION

TYPE VB CABLE TRAY SUPPORT ELEVATION WITHOUT (ITEM M) SEISMIC BRACING KIT

DETAILS
SAS SUPERSTRUCTURE GIRDER WESTBOUND TYPICAL TRAY SUPPORTS
NO SCALE

E-122

THIS PLAN ACCURATE FOR ELECTRICAL WORK ONLY.

ALL DIMENSIONS ARE IN MILLIMETERS UNLESS OTHERWISE SHOWN

FOR REDUCED PLANS ORIGINAL SCALE IS IN MILLIMETERS 0 20 40 60 80

DGN FILE =>T:\13103\MS\pse\SAS Struc\CCO\SAS CCO42S1\CCO 42S1 Final Submittal 2008-07-11\04-0120f1_0174R01.dgn
USERNAME =>llorico

CU 04251 | EA 0120F1

LAST REVISION 00-00-00 | DATE PLOTTED => 7/11/2008 TIME PLOTTED => 2:43:24 PM

STATE OF CALIFORNIA - DEPARTMENT OF TRANSPORTATION
Caltrans

DESIGN OVERSIGHT
BEHZAD GOLEMOHAMMADI

CALCULATED/DESIGNED BY RG DATE 07/07 REVISED BY
CHECKED BY ES 07/07 DATE REVISED

FILE: T:\403\ms\pse\electrical\con19\03es1680.dgn
DATE: 3/12/2008 15:36

DIST	COUNTY	ROUTE	KILOMETER POST TOTAL PROJECT	SHEET No	TOTAL SHEETS
04	SF	80	13.2/13.9	174 S1	1204

REGISTERED ELECTRICAL ENGINEER — DATE 2/20/08

PLANS APPROVAL DATE

REGISTERED PROFESSIONAL ENGINEER S. A. ESTOQUE, JR. No. E-10151 Exp. 12/31/2008 ELECTRICAL STATE OF CALIFORNIA

PB AMERICAS, Inc.
A Parsons Brinckerhoff Company
303 Second St., Suite 700N
San Francisco, CA 94107-1317

The State of California or its officers or agents shall not be responsible for the accuracy or completeness of electronic copies of this plan sheet.

Caltrans now has a web site! To get to the web site, go to http://www.dot.ca.gov

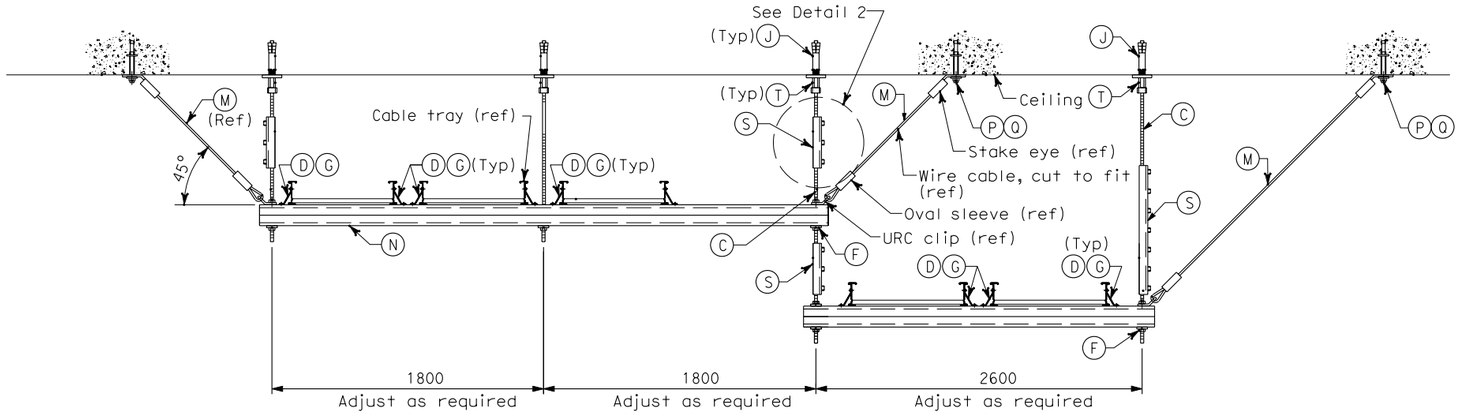

TYPE VE CABLE TRAY SUPPORT ELEVATION

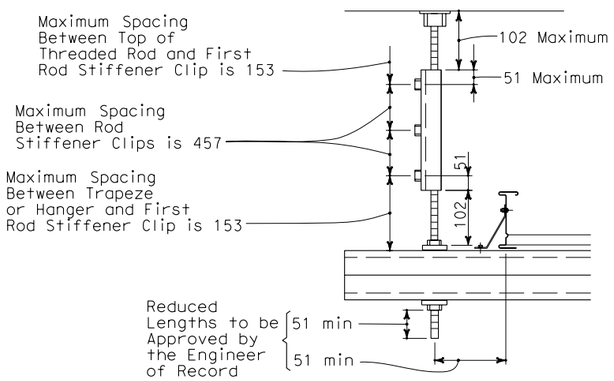

DETAIL 2

REQUEST FOR INFORMATION NOT ADDRESSED IN THIS CCO REMAIN IN FORCE					
1	02/25/08	CABLE TRAY CHANGES	RG	SE	42S1
MARK	DATE	DESCRIPTIONS	BY	CH'D	CCO#
REVISIONS					

CONTRACT CHANGE ORDER NO._____
SHEET _____ OF _____

MATERIAL LIST

Item No.	Description	Type VA thru VE
(A)	Deleted	
(B)	Deleted	
(C)	Threaded steel hanger rod, 13 mm diameter	X
(D)	Strut channel spring nut, lock washer and hex bolt	X
(E)	Hold down clamp Cooper B-Line #9SS6-1205 or equal	X
(F)	Strut hanger trapeze hardware kit	X
(G)	Heavy duty hold down clamp Cooper B-Line #9SS6-1241 or equal	
(H)	Deleted	
(J)	Rod hanger expansion anchor, 13 mm dia, 100 mm minimum depth embedment and allowable load (in tension) of 4.45 kN	X
(K)	Deleted	
(L)	Deleted	
(M)	Rod hanger seismic bracing kit (includes 4-stake eyes, 4-oval sleeves, 4-URC clips and 4-3048mm long wire cables) PW Industries part no. PW18-C26-10/C-SP-316SS or equal	X
(N)	Strut channel, 41 mm x 82 mm (Double)	X
(P)	Expansion/sleeve anchors 13 mm dia x 76 mm long hex type	X
(Q)	Flat washer 13 mm dia bolt size	X
(R)	Deleted	
(S)	Threaded rod (13 mm) with stiffener & stiffener clips	X
(T)	Rod coupler, hex nut and washer for expansion anchor	X
(U)	Deleted	
(V)	Deleted	
(W)	Deleted	

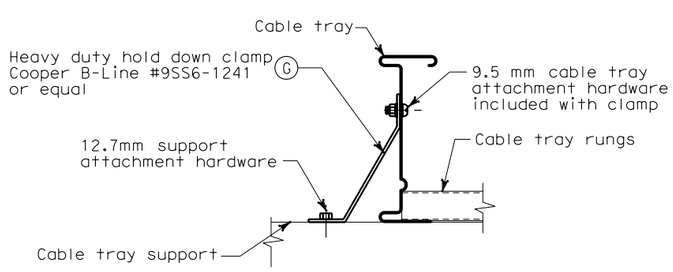

TYPE I

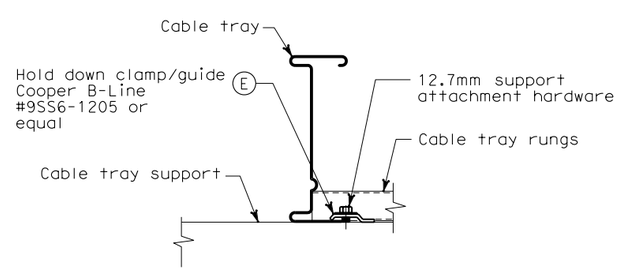

TYPE II
(OPTIONAL)

TYPICAL CABLE TRAY ATTACHMENT

DETAILS
SAS SUPERSTRUCTURE GIRDER WESTBOUND
TYPICAL TRAY SUPPORTS
NO SCALE

E-122A

THIS PLAN ACCURATE FOR ELECTRICAL WORK ONLY.

ALL DIMENSIONS ARE IN MILLIMETERS UNLESS OTHERWISE SHOWN

FOR REDUCED PLANS ORIGINAL SCALE IS IN MILLIMETERS 0 20 40 60 80

DGN FILE =>T:\13103\MS\pse\SAS Struc\CCO\SAS CCO42S1\CCO 42S1 Final Submittal 2008-07-11\04-0120f1_0174S01.dgn
USERNAME =>llorico

CU 04251 | EA 0120F1

DESIGN OVERSIGHT — BEHZAD GOLEMOHAMMADI

CALCULATED/DESIGNED BY — RG — DATE 07/07
CHECKED BY — ES — 07/07

REVISED BY	DATE REVISED

STATE OF CALIFORNIA - DEPARTMENT OF TRANSPORTATION — Caltrans

LAST REVISION 00-00-00 — DATE PLOTTED => 7/11/2008 TIME PLOTTED => 2:43:45 PM

DIST	COUNTY	ROUTE	KILOMETER POST TOTAL PROJECT	SHEET No	TOTAL SHEETS
04	SF	80	13.2/13.9	175 R1	1204

REGISTERED ELECTRICAL ENGINEER 12/19/02 DATE

12-6-04
PLANS APPROVAL DATE

REGISTERED PROFESSIONAL ENGINEER JENS ERLINGSSON No. C54338 Exp. 12/31/03 ELECTRICAL STATE OF CALIFORNIA

PB POWER, Inc.
A Parsons Brinckerhoff Company
303 Second St., Suite 700N
San Francisco, CA 94107-1317

The State of California or its officers or agents shall not be responsible for the accuracy or completeness of electronic copies of this plan sheet.

Caltrans now has a web site! To get to the web site, go to http://www.dot.ca.gov

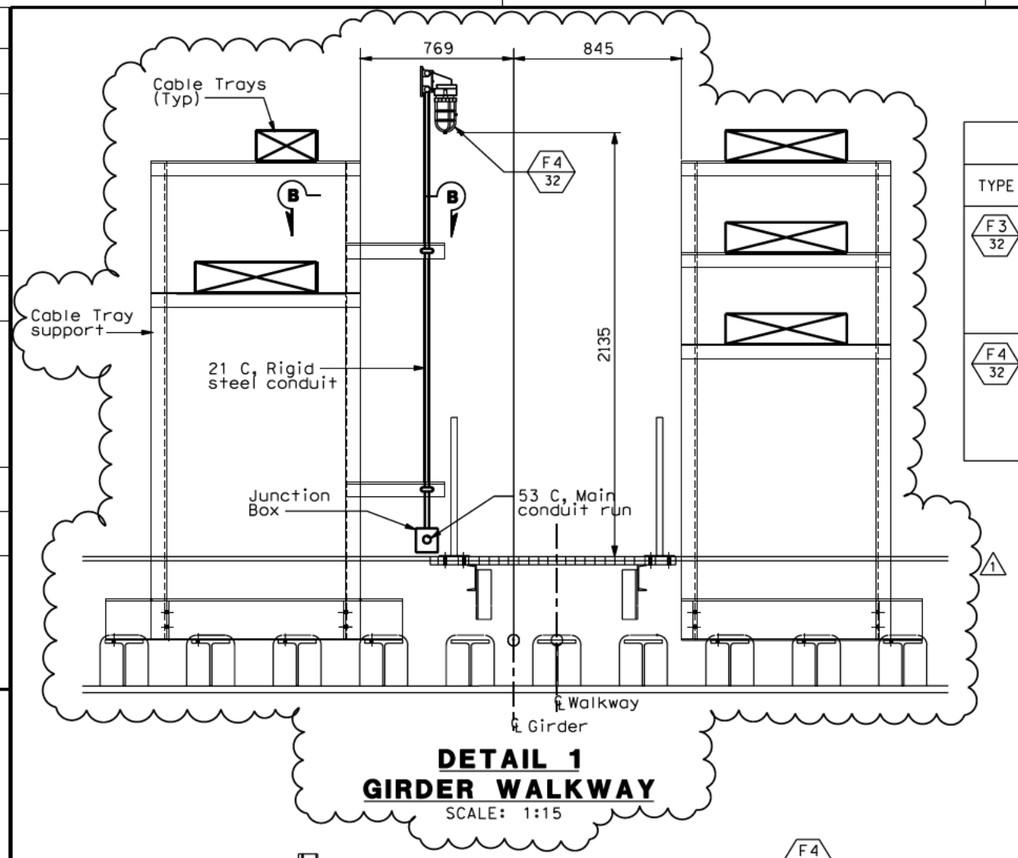

DETAIL 1
GIRDER WALKWAY
SCALE: 1:15

LIGHTING FIXTURE SCHEDULE

TYPE	INPUT VOLT-AMP	DESCRIPTION	REMARKS
F3 32	41	Compact fluorescent fixture, non metallic vaportight housing with guard and clear glass globe, U.L. listed for wet and marine environment, 120 VAC, high frequency ballast and (1) 32 watt CFM32/GX24Q lamp. Suitable for wall mounting.	
F4 32	41	Compact fluorescent fixture, non metallic vaportight housing with guard and clear glass globe, U.L. listed for wet and marine environment, 120 VAC, high frequency ballast and (1) 32 watt CFM32/GX24Q lamp. Suitable for stanchion mounting.	

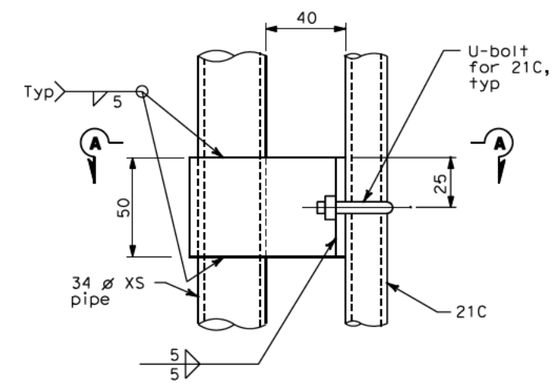

DETAIL 4
NO SCALE

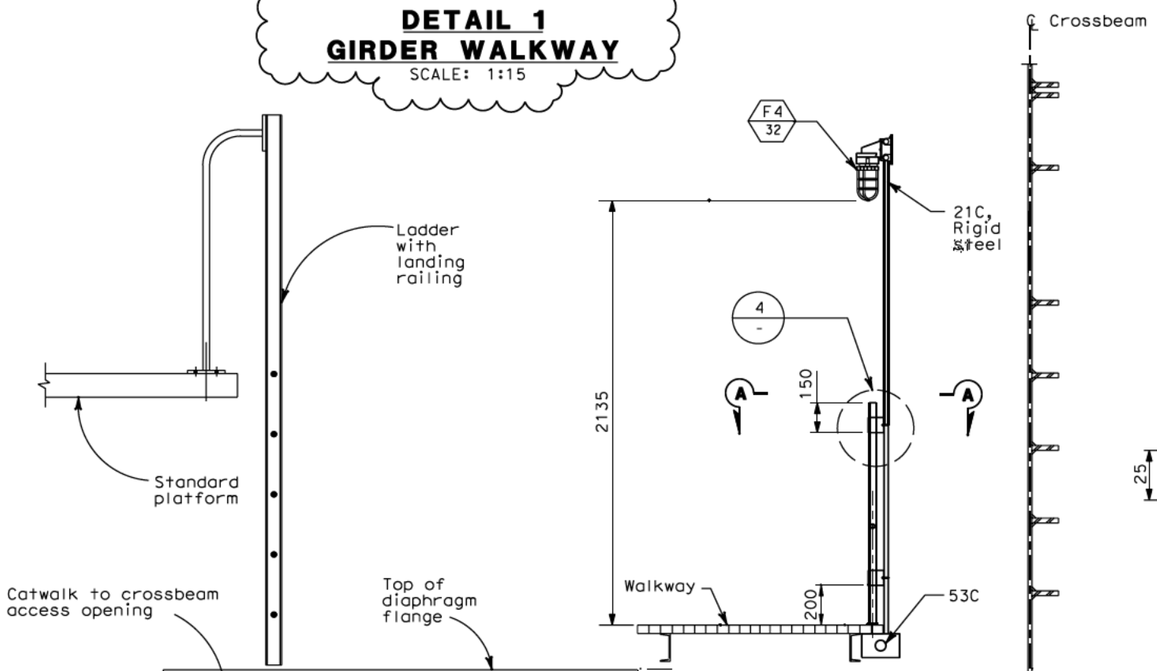

DETAIL 3
CROSSBEAM WALKWAY LIGHTING
STANCHION MOUNTED
SCALE: 1:15

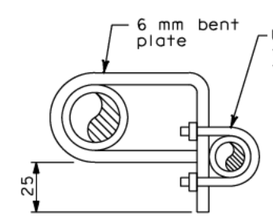

SECTION A-A
NO SCALE

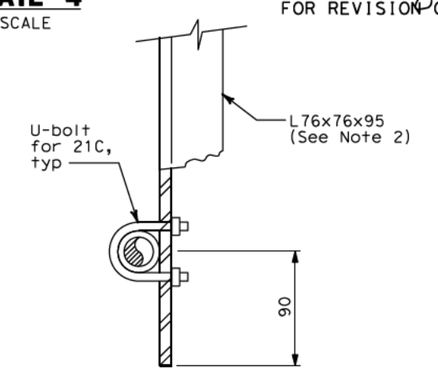

SECTION B-B
NO SCALE

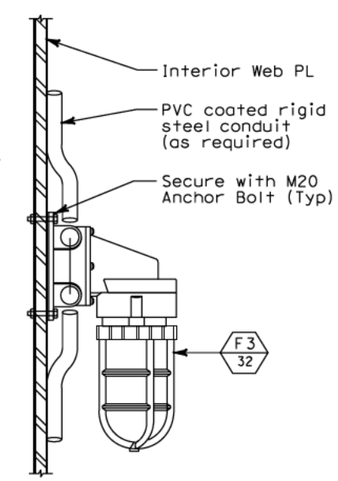

DETAIL 2
ACCESS LIGHTING
WALL MOUNTED
NO SCALE

NOTES:

1. Fittings and mounting hardware shall be stainless steel. For additional requirements, see Electrical Special Provisions.
2. For stanchion mounted light support detail on cable tray support structure, see sheet AS-11. 1

REQUEST FOR INFORMATION NOT ADDRESSED IN THIS CCO REMAIN IN FORCE

MARK	DATE	DESCRIPTIONS	BY	CH'D	CCO#
1	02/25/08	CABLE TRAY CHANGES	TW	RG SE	42S1

REVISIONS

CONTRACT CHANGE ORDER NO._____
SHEET _____ OF _____

REGISTERED PROFESSIONAL ENGINEER S. A. ESTOQUE, JR. No. E-10151 Exp. 12/31/2008 ELECTRICAL STATE OF CALIFORNIA

FOR REVISION ONLY

DETAILS
SAS SUPERSTRUCTURE GIRDER WESTBOUND
TYPICAL LIGHTING INSTALLATION
SCALE AS NOTED

ALL DIMENSIONS ARE IN MILLIMETERS UNLESS OTHERWISE SHOWN

THIS PLAN IS ACCURATE FOR ELECTRICAL WORK ONLY.

E-123

CALCULATED/DESIGNED BY	FK	DATE 08/02	REVISED BY
CHECKED BY	IAH	08/02	DATE REVISED
			IAH 03/04

DESIGN OVERSIGHT
Bob Zandipour

STATE OF CALIFORNIA - DEPARTMENT OF TRANSPORTATION
Caltrans

LAST REVISION 00-00-00
DATE PLOTTED => 7/11/2008
TIME PLOTTED => 2:44:08 PM

FOR REDUCED PLANS ORIGINAL SCALE IS IN MILLIMETERS 0 20 40 60 80

DGN FILE =>T:\13103\MS\pse\SAS Struc\CCO\SAS CCO42S1\CCO 42S1 Final Submittal 2008-07-11\04-0120f1_0175R01.dgn
USERNAME =>llorico
CU 04251 EA 0120F1

DIST	COUNTY	ROUTE	KILOMETER POST TOTAL PROJECT	SHEET No	TOTAL SHEETS
04	SF	80	13.2/13.9	176 R1	1204

Caltrans Metric

12/19/02
REGISTERED ELECTRICAL ENGINEER DATE

12/6/04
PLANS APPROVAL DATE

REGISTERED PROFESSIONAL ENGINEER JENS ERLINGSSON No. 8249 Exp. 9/30/06 ELECTRICAL STATE OF CALIFORNIA

PB POWER, Inc.
A Parsons Brinckerhoff Company
303 Second St., Suite 700N
San Francisco, CA 94107-1317

The State of California or its officers or agents shall not be responsible for the accuracy or completeness of electronic copies of this plan sheet.

To get to the web site, go to: http://www.dot.ca.gov

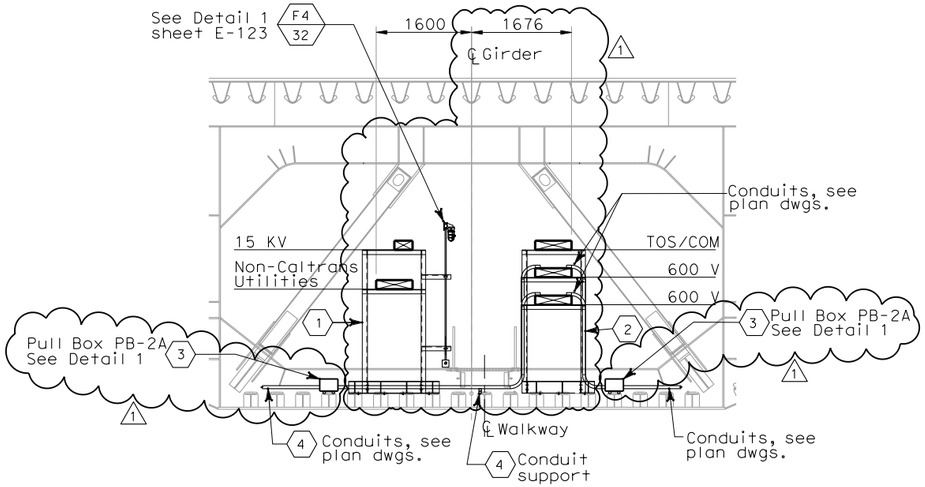

DETAIL-TYPICAL CABLE TRAY SUPPORT AND PULL BOX LOCATION

SECTION A-A

SCALE 1:50
(E-96, E-124A, E-124B)

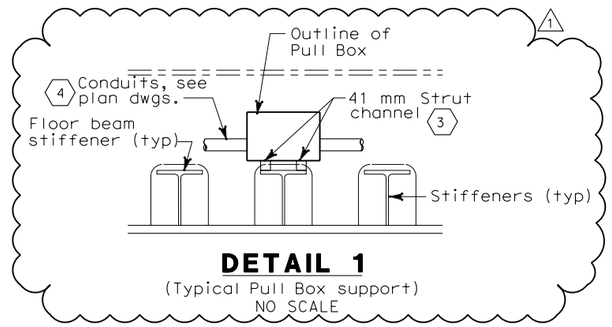

DETAIL 1

(Typical Pull Box support)
NO SCALE

REGISTERED PROFESSIONAL ENGINEER S. A. ESTOQUE, JR No. E-10151 Exp. 12/31/2008 ELECTRICAL STATE OF CALIFORNIA

FOR REVISION ONLY

REQUEST FOR INFORMATION NOT ADDRESSED IN THIS CCO REMAIN IN FORCE					
1	02/25/08	CABLE TRAY CHANGES	TW	RG SE	42S1
MARK	DATE	DESCRIPTIONS	BY	CH'D	CCO#
REVISIONS					

CONTRACT CHANGE ORDER NO._____
SHEET _____ OF _____

SHEET NOTES:

1. Type I, for cable tray supports details, see AS sheets.
2. Type II, for cable tray supports details, see AS sheets.
3. Pull Box PB-2A shall be located on top of stiffener. The Contractor shall provide strut channel for support installed in field.
4. The Contractor shall install in the field strut channel on top of stiffener for conduit support.

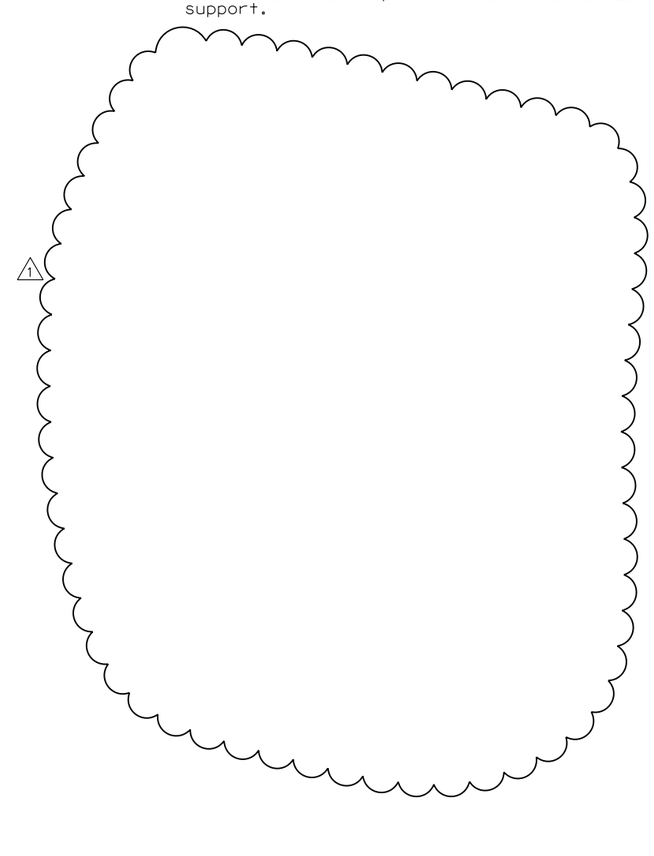

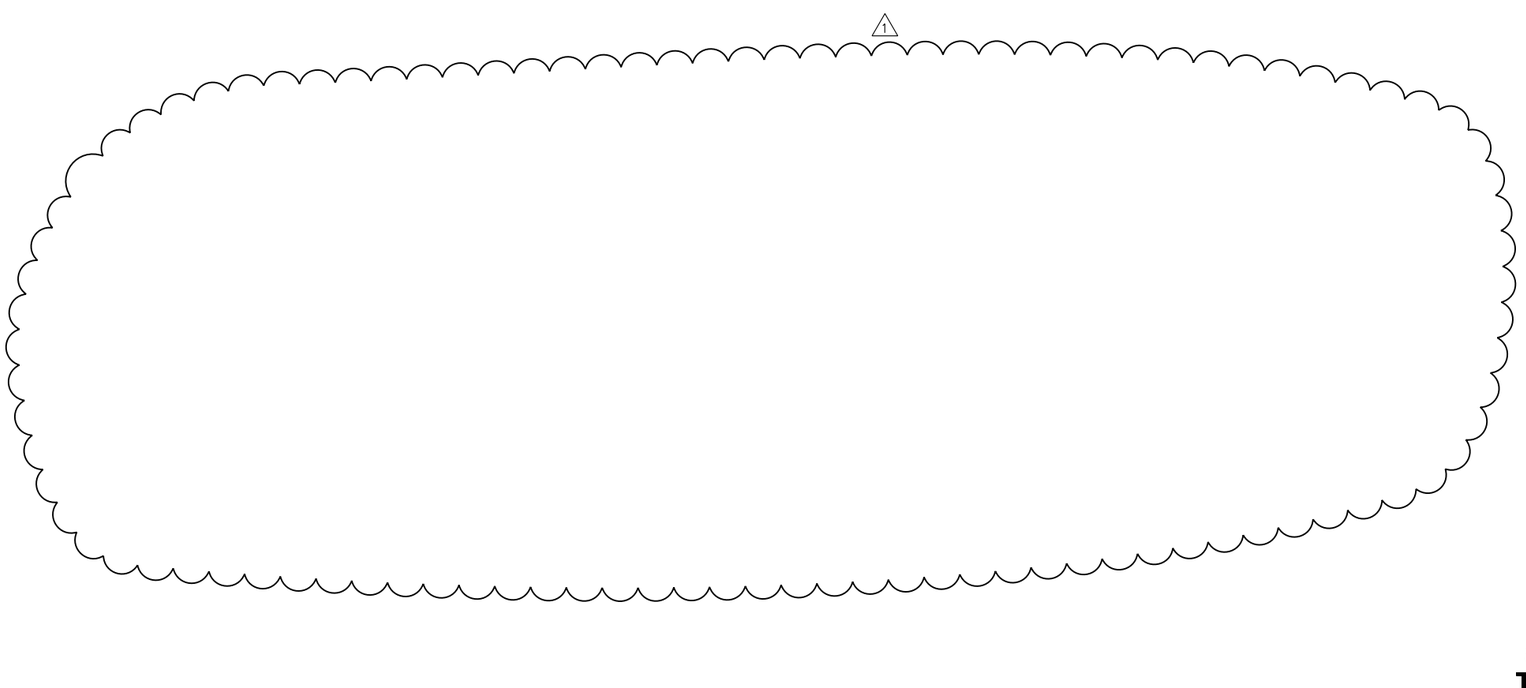

DETAILS
SAS SUPERSTRUCTURE GIRDER WESTBOUND TYPICAL TRAY AND CONDUIT INSTALLATION

SCALE AS NOTED

E-124

THIS PLAN ACCURATE FOR ELECTRICAL WORK ONLY.

ALL DIMENSIONS ARE IN MILLIMETERS UNLESS OTHERWISE SHOWN

STATE OF CALIFORNIA - DEPARTMENT OF TRANSPORTATION
Caltrans

DESIGN OVERSIGHT: BEHZAD GOLEMOHAMMADI

CALCULATED/ DESIGNED BY	FK	DATE 08/02	REVISED BY	IAH
CHECKED BY	IAH	08/02	DATE REVISED	3/04

FOR REDUCED PLANS ORIGINAL SCALE IS IN MILLIMETERS 0 20 40 60 80

DGN FILE =>T:\13103\MS\pse\SAS Struc\CCO\SAS CC042S1\CCO 42S1 Final Submittal 2008-07-11\04-0120f1_0176R01.dgn
USERNAME =>llorico
CU 04251
EA 0120F1

LAST REVISION 00-00-00
DATE PLOTTED => 7/11/2008
TIME PLOTTED => 2:44:24 PM

DIST	COUNTY	ROUTE	KILOMETER POST TOTAL PROJECT	SHEET No	TOTAL SHEETS
04	SF	80	13.2/13.9	176 S1	1204

REGISTERED ELECTRICAL ENGINEER 2/22/08 DATE

PLANS APPROVAL DATE

REGISTERED PROFESSIONAL ENGINEER S. A. ESTOQUE, JR. No. E-10151 Exp. 12/31/2008 STATE OF CALIFORNIA

PB AMERICAS, Inc.
A Parsons Brinckerhoff Company
303 Second St., Suite 700N
San Francisco, CA 94107-1317

The State of California or its officers or agents shall not be responsible for the accuracy or completeness of electronic copies of this plan sheet.

Caltrans now has a web site! To get to the web site, go to http://www.dot.ca.gov

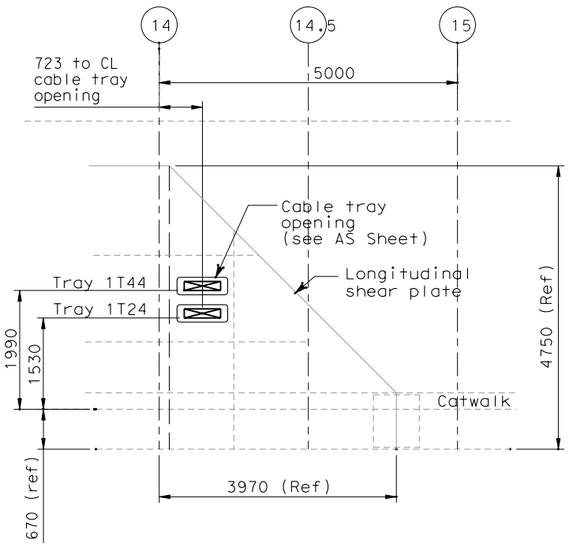

DETAIL 1

Cable penetration thru longitudinal shear plate
Scale 1:50

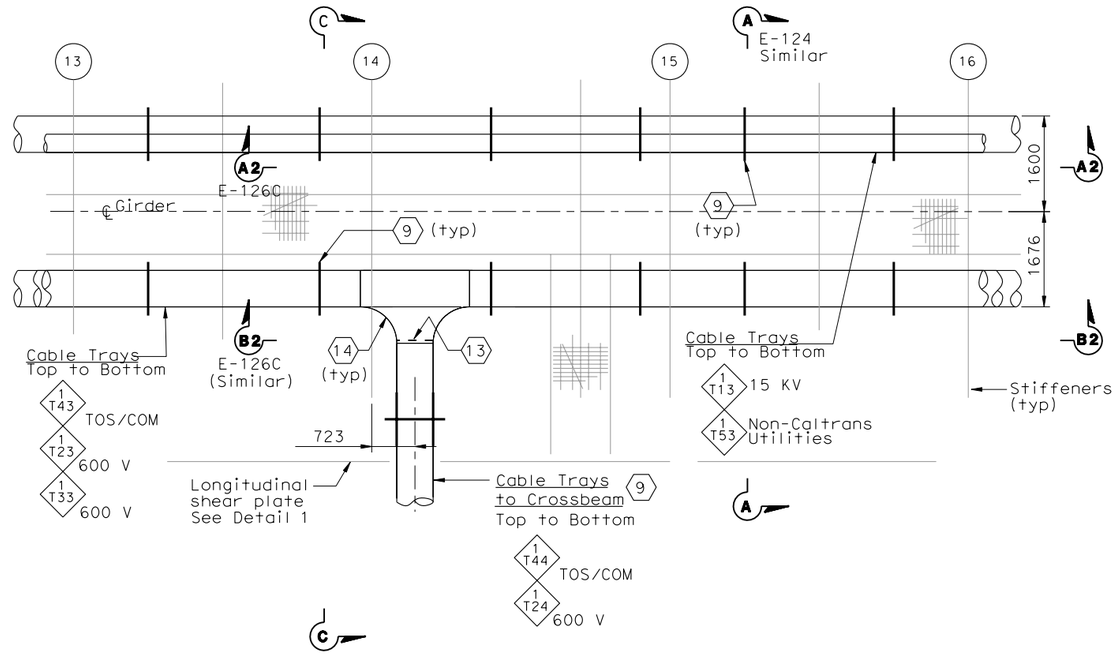

PLAN- CABLE TRAY AT PP-14

Scale 1:50

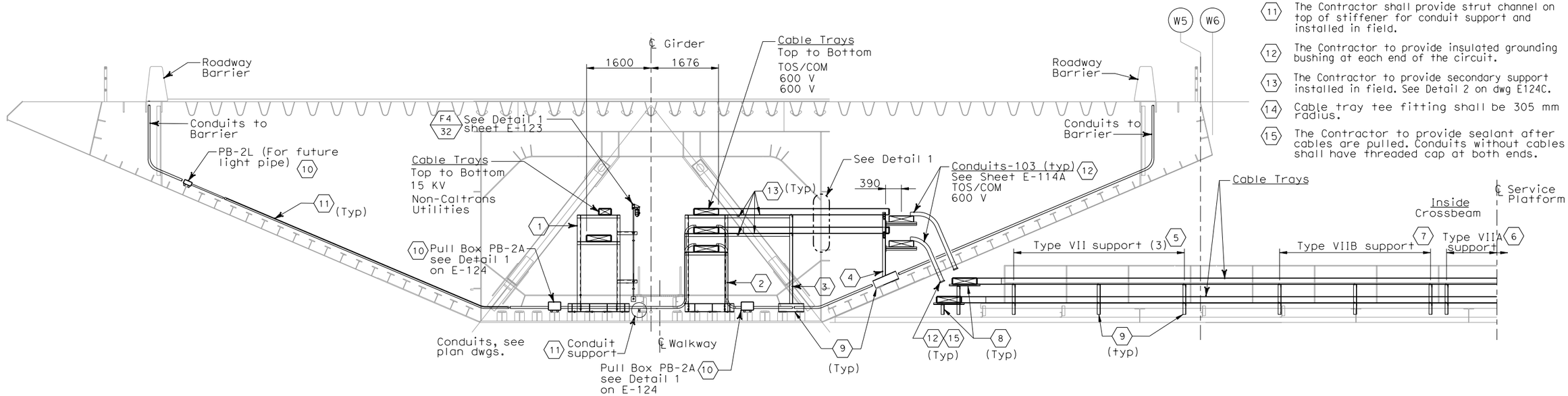

SECTION C - C

(Cable Tray and Support to Crossbeam
Panel Point PP-14)
Scale 1:50

SHEET NOTES:

1. Type I, for cable tray supports details, see AS sheets.
2. Type II, for cable tray supports details, see AS sheets.
3. Type V, for cable tray supports details, see AS sheets.
4. Type VI, for cable tray supports details, see AS sheets.
5. Type VII, for cable tray supports details, see AS sheets.
6. Type VIIA, for cable tray supports details, see AS sheets.
7. Type VIIB, for cable tray supports details, see AS sheets.
8. The Contractor to provide cable tray support at each ends of cable tray fitting as required.
9. For cable tray support see AS-Sheets.
10. Pull Box PB-2A and PB-2L shall be located on top of stiffener. The Contractor shall provide strut channel for support installed in field.
11. The Contractor shall provide strut channel on top of stiffener for conduit support and installed in field.
12. The Contractor to provide insulated grounding bushing at each end of the circuit.
13. The Contractor to provide secondary support installed in field. See Detail 2 on dwg E124C.
14. Cable tray tee fitting shall be 305 mm radius.
15. The Contractor to provide sealant after cables are pulled. Conduits without cables shall have threaded cap at both ends.

REQUEST FOR INFORMATION NOT ADDRESSED IN THIS CCO REMAIN IN FORCE					
0	02/25/08	CABLE TRAY CHANGES	TW	RG SE	42S1
MARK	DATE	DESCRIPTIONS	BY	CH'D	CCO#
REVISIONS					

CONTRACT CHANGE ORDER NO._____
SHEET _____ OF _____

DETAILS
SAS SUPERSTRUCTURE GIRDER WESTBOUND TYPICAL TRAY AND CONDUIT INSTALLATION

SCALE AS NOTED

E-124A

THIS PLAN IS ACCURATE FOR ELECTRICAL WORK ONLY.

ALL DIMENSIONS ARE IN MILLIMETERS UNLESS OTHERWISE SHOWN

FOR REDUCED PLANS ORIGINAL SCALE IS IN MILLIMETERS 0 20 40 60 80

DGN FILE =>T:\13103\MS\pse\SAS Struc\CCO\SAS CCO42S1\CCO 42S1 Final Submittal 2008-07-11\04-0120F1_0176S01.dgn
USERNAME =>llorico

CU 04251 EA 0120F1

DATE PLOTTED => 7/11/2008
TIME PLOTTED => 2:44:48 PM

LAST REVISION 00-00-00

STATE OF CALIFORNIA - DEPARTMENT OF TRANSPORTATION

DESIGN OVERSIGHT BEHZAD GOLEMOHAMMADI

CALCULATED/DESIGNED BY | CHECKED BY | DATE | REVISED BY | DATE REVISED

DIST	COUNTY	ROUTE	KILOMETER POST TOTAL PROJECT	SHEET No	TOTAL SHEETS
04	SF	80	13.2/13.9	176 S2	1204

REGISTERED ELECTRICAL ENGINEER — DATE 2/22/08

PLANS APPROVAL DATE

REGISTERED PROFESSIONAL ENGINEER S. A. ESTOQUE, JR. No. E-10151 Exp. 12/31/2008 ELECTRICAL STATE OF CALIFORNIA

PB AMERICAS, Inc.
A Parsons Brinckerhoff Company
303 Second St., Suite 700N
San Francisco, CA 94107-1317

The State of California or its officers or agents shall not be responsible for the accuracy or completeness of electronic copies of this plan sheet.

Caltrans now has a web site! To get to the web site, go to http://www.dot.ca.gov

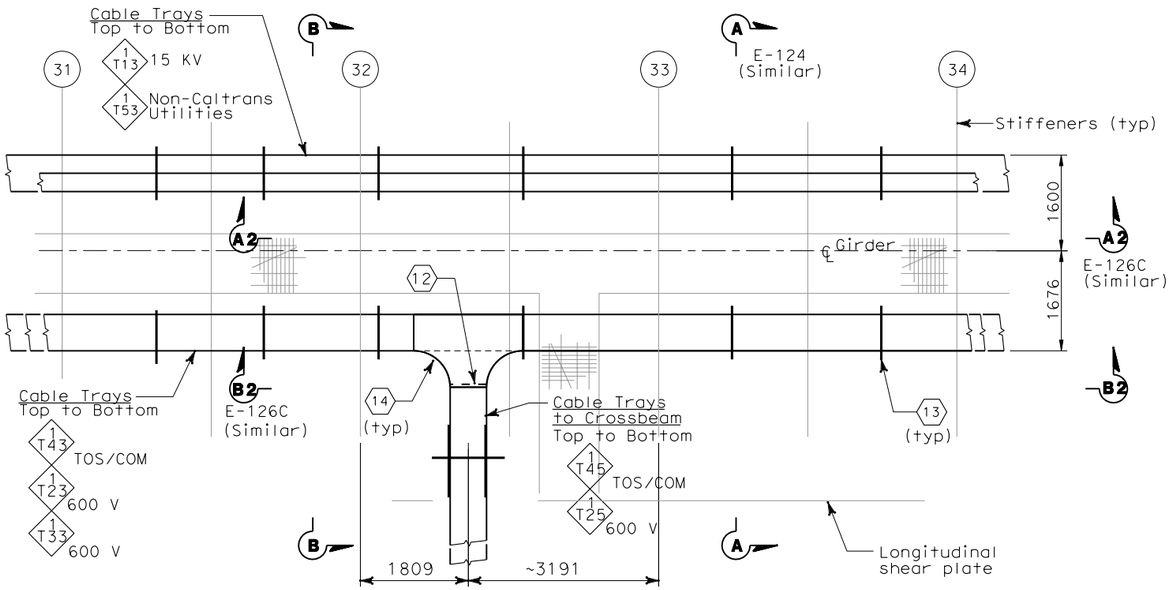

PLAN- CABLE TRAY AT PP 32

(SIMILAR FOR LOCATION AT PP 50, PP80 and PP-110)
SCALE 1:50

SHEET NOTES:

1. Type I, for cable tray supports details, see AS sheets.
2. Type II, for cable tray supports details, see AS sheets.
3. Type V, for cable tray supports details, see AS sheets.
4. Type VI, for cable tray supports details, see AS sheets.
5. Type VII, for cable tray supports details, see AS sheets.
6. Type VIIA, for cable tray supports details, see AS sheets.
7. Type VIIB, for cable tray supports details, see AS sheets.
8. The Contractor to provide cable tray support at each ends of cable tray fitting as required.
9. Pull Box PB-2A and PB-2L shall be located on top of stiffener. The Contractor shall provide strut channel for support installed in field.
10. The Contractor shall provide strut channel on top of stiffener for conduit support and installed in field.
11. The Contractor to provide grounding bushing at each end of the conduit.
12. The Contractor to provide suitable secondary tray support installed in field. See Detail 3 on drawing E-124C.
13. For cable tray support see AS-Sheets.
14. Cable tray tee fitting shall have 305 mm radius.

REQUEST FOR INFORMATION NOT ADDRESSED IN THIS CCO REMAIN IN FORCE

MARK	DATE	DESCRIPTIONS	BY	CH'D	CCO#
0	02/25/08	CABLE TRAY CHANGES	TW	RG SE	42S1

REVISIONS

CONTRACT CHANGE ORDER NO._____
SHEET _____ OF _____

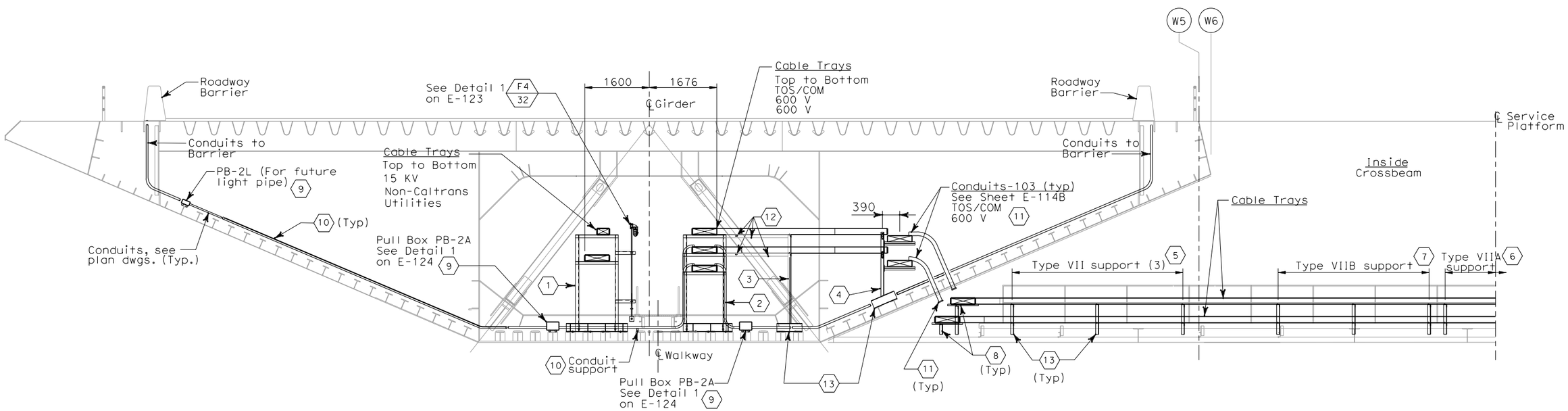

SECTION B-B

(TYPICAL CABLE TRAY AND SUPPORT TO CROSSBEAM
PP-32, PP-50, PP-80 AND PP-110)
SCALE 1:50

DETAILS
SAS SUPERSTRUCTURE GIRDER WESTBOUND
TYPICAL TRAY AND CONDUIT INSTALLATION

SCALE AS NOTED

E-124B

THIS PLAN IS ACCURATE FOR ELECTRICAL WORK ONLY.

ALL DIMENSIONS ARE IN MILLIMETERS UNLESS OTHERWISE SHOWN

CALCULATED/DESIGNED BY	FK	DATE 08/02	REVISED BY
CHECKED BY	IAH	08/02	DATE REVISED
DESIGN OVERSIGHT	BEHZAD GOLEMOHAMMADI		IAH 3/04

STATE OF CALIFORNIA - DEPARTMENT OF TRANSPORTATION

Caltrans

FOR REDUCED PLANS ORIGINAL SCALE IS IN MILLIMETERS 0 20 40 60 80

DGN FILE =>T:\13103\MS\pse\SAS Struc\CCO\SAS CCO42S1\CCO 42S1 Final Submittal 2008-07-11\04-0120f1_0176S02.dgn
USERNAME =>llorico

CU 04251 EA 0120F1

LAST REVISION 00-00-00 DATE PLOTTED => 7/11/2008 TIME PLOTTED => 2:45:08 PM

DIST	COUNTY	ROUTE	KILOMETER POST TOTAL PROJECT	SHEET No	TOTAL SHEETS
04	SF	80	13.2/13.9	176 S3	1204

REGISTERED ELECTRICAL ENGINEER 2/22/08 DATE

PLANS APPROVAL DATE

REGISTERED PROFESSIONAL ENGINEER S. A. ESTOQUE, JR. No. E-10151 Exp. 12/31/2008 ELECTRICAL STATE OF CALIFORNIA

PB AMERICAS, Inc.
A Parsons Brinckerhoff Company
303 Second St., Suite 700N
San Francisco, CA 94107-1317

The State of California or its officers or agents shall not be responsible for the accuracy or completeness of electronic copies of this plan sheet.

Caltrans now has a web site! To get to the web site, go to http://www.dot.ca.gov

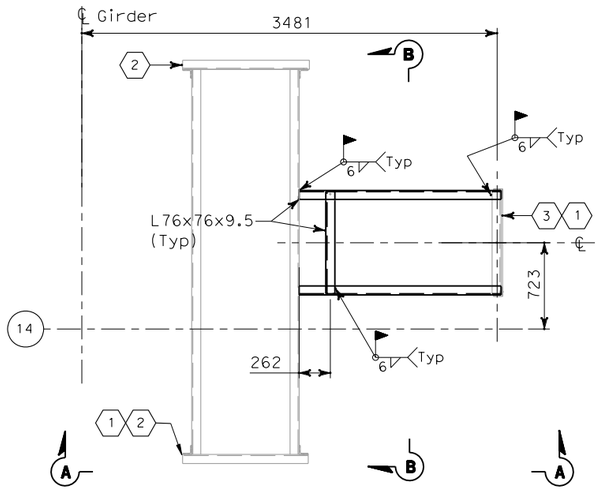

DETAIL 2

(Field Cable tray Support to Crossbeam PP-14)
Scale 1:50

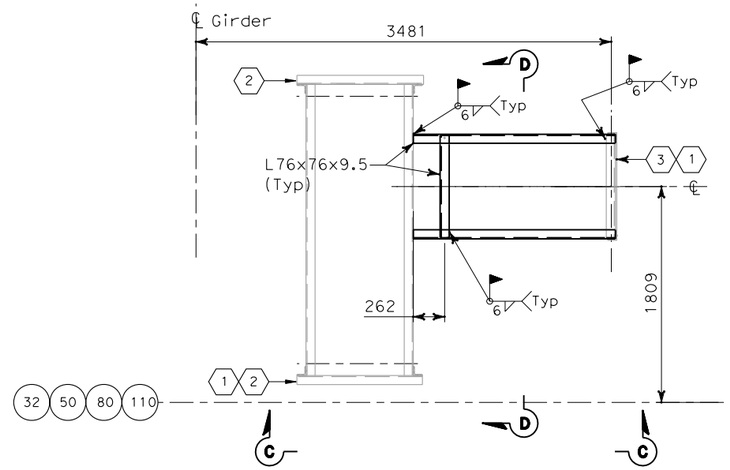

DETAIL 3

(Typical Field Cable tray Support to Crossbeam PP-32, PP-50, PP-80 and PP-110)
Scale 1:50

SHEET NOTES:

1. For cable tray support see AS-16K, AS-16L, AS-16M, AS-16N AND AS-16P.
2. Type II, for cable tray supports details, see AS-11.
3. Type V, for cable tray supports details, see AS-14.

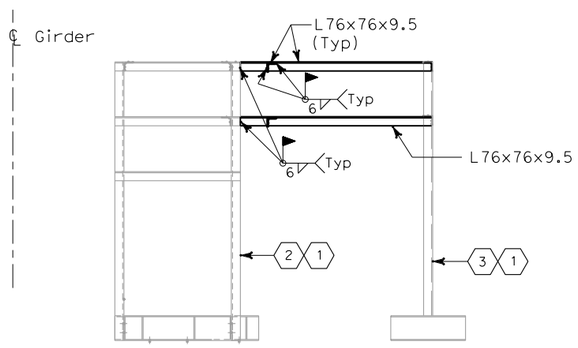

SECTION A-A

Scale 1:50

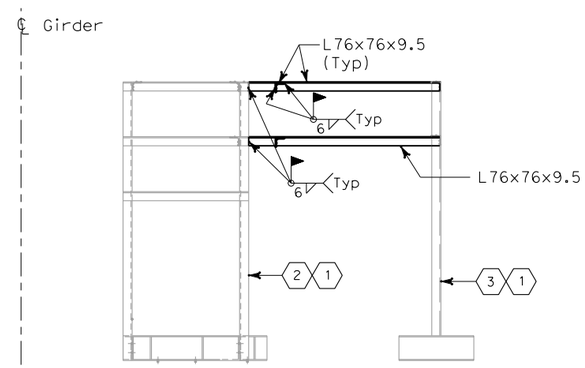

SECTION C-C

Scale 1:50

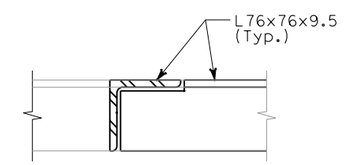

DETAIL 4

No Scale

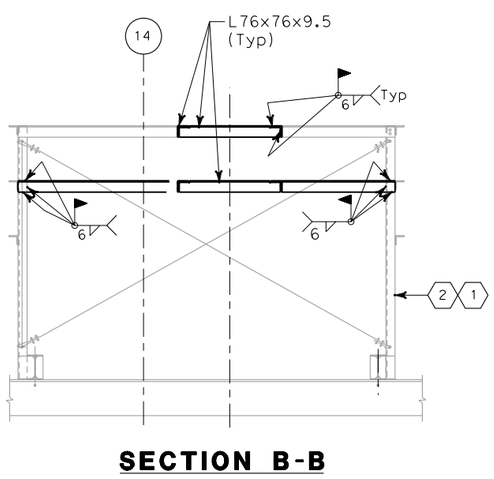

SECTION B-B

Scale 1:50

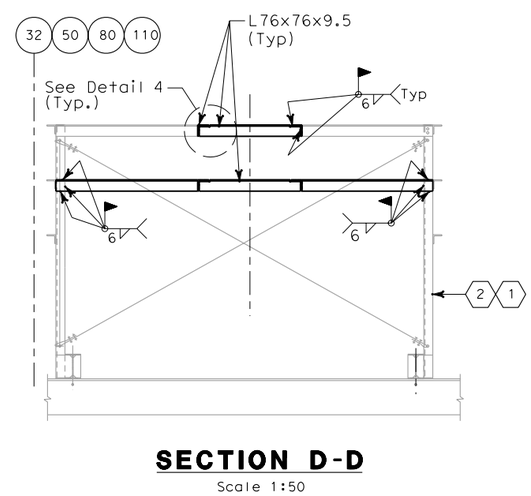

SECTION D-D

Scale 1:50

REQUEST FOR INFORMATION NOT ADDRESSED IN THIS CCO REMAIN IN FORCE					
0	02/25/08	CABLE TRAY CHANGES	TW	RG SE	42S1
MARK	DATE	DESCRIPTIONS	BY	CH'D	CCO#
REVISIONS					

CONTRACT CHANGE ORDER NO._____
SHEET _____ OF _____

DETAILS
SAS SUPERSTRUCTURE GIRDER WESTBOUND TYPICAL TRAY AND CONDUIT INSTALLATION

SCALE AS NOTED

E-124C

DESIGN OVERSIGHT: BEHZAD GOLEMOHAMMADI

CALCULATED/DESIGNED BY | CHECKED BY | DATE | REVISED BY | DATE REVISED

STATE OF CALIFORNIA - DEPARTMENT OF TRANSPORTATION

Caltrans

THIS PLAN ACCURATE FOR ELECTRICAL WORK ONLY.

ALL DIMENSIONS ARE IN MILLIMETERS UNLESS OTHERWISE SHOWN

FOR REDUCED PLANS ORIGINAL SCALE IS IN MILLIMETERS 0 20 40 60 80

DGN FILE =>T:\13103\MS\pse\SAS Struc\CCO\SAS CCO42S1\CCO 42S1 Final Submittal 2008-07-11\04-0120F1_0176S03.dgn
USERNAME =>llorico

CU 04251 | EA 0120F1

LAST REVISION 00-00-00 | DATE PLOTTED => 7/11/2008 TIME PLOTTED => 2:45:37 PM

DIST	COUNTY	ROUTE	KILOMETER POST TOTAL PROJECT	SHEET No	TOTAL SHEETS
04	SF	80	13.2/13.9	177 R1	1204

12/19/02
REGISTERED ELECTRICAL ENGINEER DATE

12-6-04
PLANS APPROVAL DATE

REGISTERED PROFESSIONAL ENGINEER JENS ERLINGSSON No. 8249 Exp. 9/30/06 ELECTRICAL STATE OF CALIFORNIA

PB POWER, Inc.
A Parsons Brinckerhoff Company
303 Second St., Suite 700N
San Francisco, CA 94107-1317

The State of California or its officers or agents shall not be responsible for the accuracy or completeness of electronic copies of this plan sheet.

Caltrans now has a web site! To get to the web site, go to http://www.dot.ca.gov

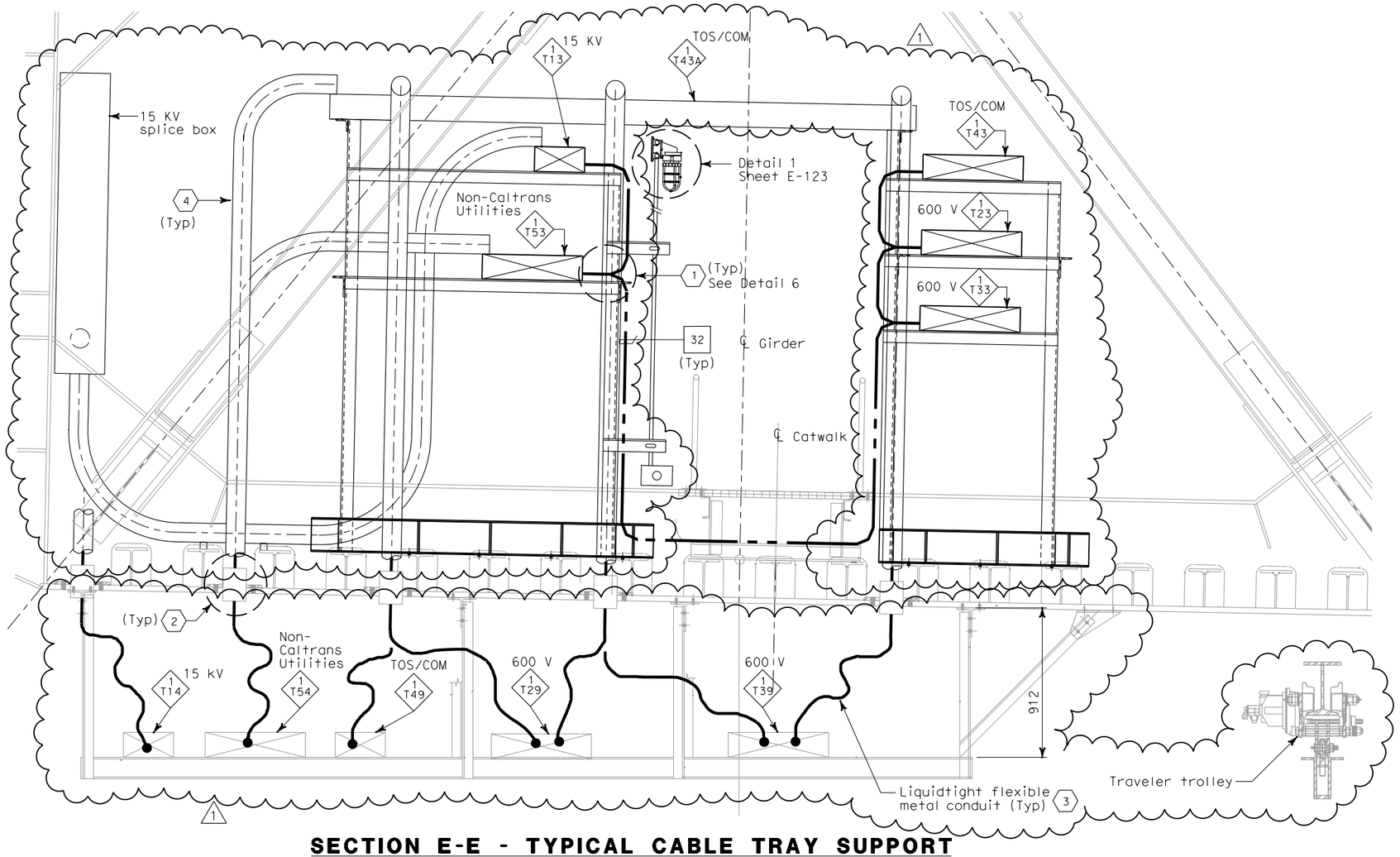

SECTION E-E - TYPICAL CABLE TRAY SUPPORT

SCALE: 1:15

SHEET NOTES:

1. Provide connections to 500 kcmil system ground for all cable trays, every 200 meters.
2. For location of conduit penetrations thru girder plate, see Utility Detail No. 1 and Utility Layout sheets respectively. To prevent moisture from passing inside the sleeve, Contractor shall install sealant after conduit have been installed. Spares shall be plugged and capped.
3. For installation detail of liquidtight flexible metal conduits below girder, see sheet E-126.
4. For installation detail of conduits inside girder, see sheet E-126B.

1

NOTES:

1. See structural drawings for Catwalk Support Details.
2. For SAS Superstructure Girder access detail #2, see structural dwgs.
3. Ground cable shall be installed along full length of the 15 kV cable tray only.
4. For typical cable tray support details, see AS-sheets.

1

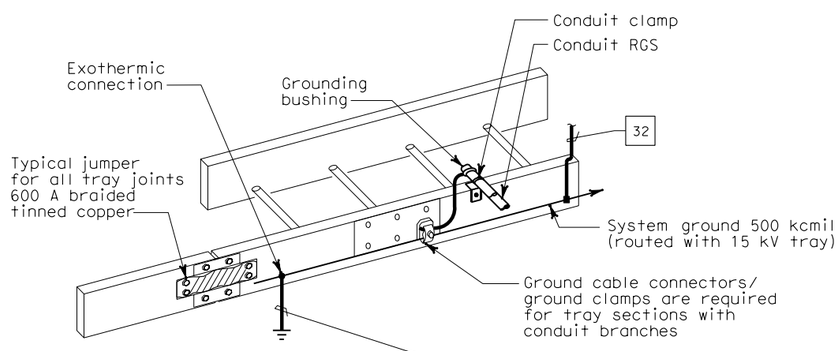

GROUNDING OF METALLIC RACEWAYS

DETAIL 6

NO SCALE

REGISTERED PROFESSIONAL ENGINEER S. A. ESTOQUE, JR. No. E-10151 Exp. 12/31/2008 ELECTRICAL STATE OF CALIFORNIA

FOR REVISION ONLY

REQUEST FOR INFORMATION NOT ADDRESSED IN THIS CCO REMAIN IN FORCE

MARK	DATE	DESCRIPTIONS	BY	CH'D	CCO#
1	02/25/08	CABLE TRAY CHANGES	RG	SE	42S1

REVISIONS

CONTRACT CHANGE ORDER NO._____
SHEET _____ OF _____

DETAILS
SAS SUPERSTRUCTURE GIRDER WESTBOUND TYPICAL TRAY AND GROUNDING INSTALLATION

NO SCALE

E-125

DESIGN OVERSIGHT	BEHZAD GOLEMOHAMMADI	
CALCULATED/DESIGNED BY	FK	DATE 08/02
CHECKED BY	IAH	08/02
REVISED BY		DATE REVISED
IAH		3/04

STATE OF CALIFORNIA - DEPARTMENT OF TRANSPORTATION

Caltrans

THIS PLAN ACCURATE FOR ELECTRICAL WORK ONLY.

ALL DIMENSIONS ARE IN MILLIMETERS UNLESS OTHERWISE SHOWN

FOR REDUCED PLANS ORIGINAL SCALE IS IN MILLIMETERS 0 20 40 60 80

DGN FILE =>T:\13103\MS\pse\SAS Struc\CCO\SAS CCO42S1\CCO 42S1 Final Submittal 2008-07-11\04-0120F1_0177R01.dgn
USERNAME =>garciar

CU 04251 | EA 0120F1

LAST REVISION 00-00-00 | DATE PLOTTED => 8/27/2008 TIME PLOTTED => 2:47:56 PM

DIST	COUNTY	ROUTE	KILOMETER POST TOTAL PROJECT	SHEET No	TOTAL SHEETS
04	SF	80	13.2/13.9	178 R1	1204

12/19/02
REGISTERED ELECTRICAL ENGINEER DATE

12-6-04
PLANS APPROVAL DATE

REGISTERED PROFESSIONAL ENGINEER JENS ERLINGSSON No. 8249 Exp. 9/30/06 ELECTRICAL STATE OF CALIFORNIA

PB POWER, Inc.
A Parsons Brinckerhoff Company
303 Second St., Suite 700N
San Francisco, CA 94107-1317

The State of California or its officers or agents shall not be responsible for the accuracy or completeness of electronic copies of this plan sheet.

Caltrans now has a web site! To get to the web site, go to http://www.dot.ca.gov

Caltrans Metric

CABLE TRAY SUPPORT SCHEDULE

Item	Type	Detail Sheet	Item	Type	Detail Sheet
1	VA	E-122	6	1	AS-7
2	VB	E-122	7	2	AS-7
3	VC	E-122	8	3	AS-7
4	VD	E-122	9	4	AS-7
5	VE	E-122A	10	5	AS-7

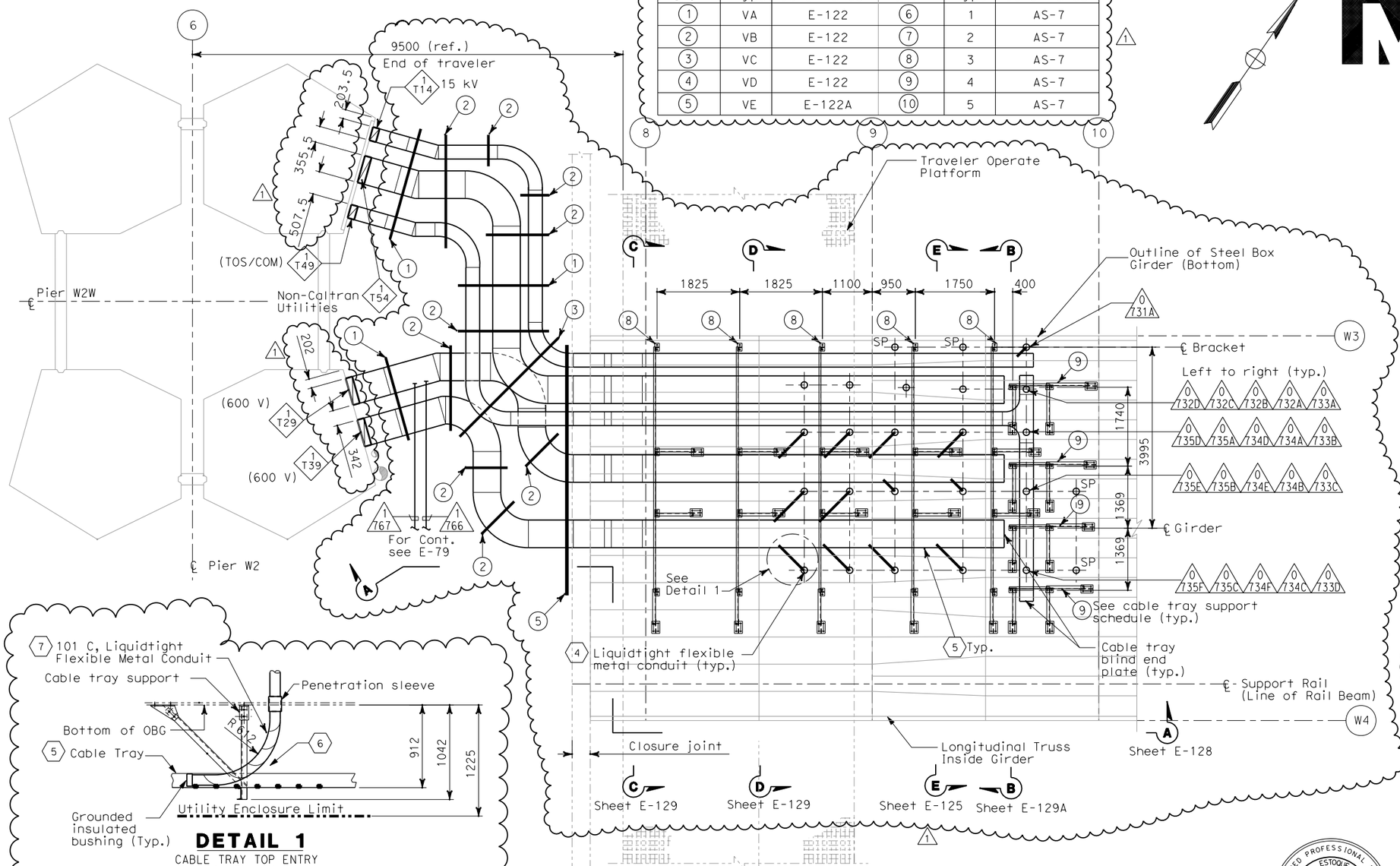

SHEET NOTES:

1. For cable tray supports details, see Cable Tray Support Schedule table.
2. Cable trays shall be as specified per specification unless noted otherwise.
3. Cable and location of penetrations thru girder plate, see Utility Detail No. 1 and Utility Layout respectively of Superstructure and Tower Drawings. To prevent moisture from entering girder, contractor to seal the space between sleeves and conduit. Spare pipe sleeves shall be provided with threaded cap at exterior end.
4. For continuation of conduit to cable trays inside OBG see E-126A.
5. Cable trays shall be anchored to supports and shall have solid cover with heavy duty cover clamps.
6. Install neoprene rubber around cable tray cover opening for protection to liquidtight flexible metal conduits as it enter the cable tray. Seal opening as needed.
7. Liquidtight flexible metal conduits shall be anchored to supports or cable trays.
8. Contractor may adjust the location of cable tray supports below W2 Pier Cap Beam to suit field condition and provide additional seismic bracing as required.

DETAIL 1

CABLE TRAY TOP ENTRY
SCALE 1:50

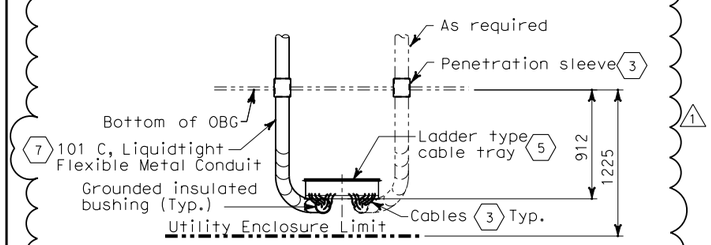

ALTERNATE

CABLE TRAY BOTTOM ENTRY
(Cable tray supports not shown for clarity)
SCALE 1:50

NOTES:

1. References:
   - For circuit and conduit/cable tray schedules, see sheets starting at E-401.
   - For locations of cable tray support embeds, see AS sheets.
2. For other related work, not shown on this sheet, see Electrical Special Provisions.
3. For actual conduit locations, see girder level, cable tray and conduits plans. See sheets E-96 thru E-101.
4. For cable tray support, embedded unistrut, and cable tray locations are shown in scaled locations.

REGISTERED PROFESSIONAL ENGINEER S. A. ESTOQUE, JR. No. E-10151 Exp. 12/31/2008 ELECTRICAL STATE OF CALIFORNIA

FOR REVISION ONLY

REQUEST FOR INFORMATION NOT ADDRESSED IN THIS CCO REMAIN IN FORCE					
1	02/25/08	CABLE TRAY CHANGES	RG	SE	42S1
MARK	DATE	DESCRIPTIONS	BY	CH'D	CCO#
		REVISIONS			

CONTRACT CHANGE ORDER NO._____
SHEET _____ OF _____

PARTIAL GIRDER PLAN CABLE TRAY LAYOUT

SCALE 1:50

DETAILS
SAS SUPERSTRUCTURE GIRDER WESTBOUND
TYPICAL TRAY AND CONDUIT INSTALLATION AT PIER W2W

SCALE AS NOTED

E-126

THIS PLAN ACCURATE FOR ELECTRICAL WORK ONLY.

ALL DIMENSIONS ARE IN MILLIMETERS UNLESS OTHERWISE SHOWN

DATE	BY	REVISED	DATE	REVISED
08/02	IAH		08/02	

CALCULATED/DESIGNED BY FK
CHECKED BY

DESIGN OVERSIGHT
BEHZAD GOLEMOHAMMADI

STATE OF CALIFORNIA - DEPARTMENT OF TRANSPORTATION
Caltrans

LAST REVISION 00-00-00
DATE PLOTTED => 7/11/2008
TIME PLOTTED => 2:46:36 PM

FOR REDUCED PLANS ORIGINAL SCALE IS IN MILLIMETERS 0 20 40 60 80

DGN FILE =>T:\13103\MS\pse\SAS Struc\CCO\SAS CCO42S1\CCO 42S1 Final Submittal 2008-07-11\04-0120f1_0178R01.dgn
USERNAME =>llorico

CU 04251 | EA 0120F1

DIST	COUNTY	ROUTE	KILOMETER POST TOTAL PROJECT	SHEET No	TOTAL SHEETS
04	SF	80	13.2/13.9	178 S1	1204

REGISTERED ELECTRICAL ENGINEER — DATE 2/22/08

REGISTERED PROFESSIONAL ENGINEER S. A. ESTOQUE, JR. No. E-10151 Exp. 12/31/2008 ELECTRICAL STATE OF CALIFORNIA

PLANS APPROVAL DATE

PB AMERICAS, Inc.
A Parsons Brinckerhoff Company
303 Second St., Suite 700N
San Francisco, CA 94107-1317

The State of California or its officers or agents shall not be responsible for the accuracy or completeness of electronic copies of this plan sheet.

Caltrans now has a web site! To get to the web site, go to http://www.dot.ca.gov

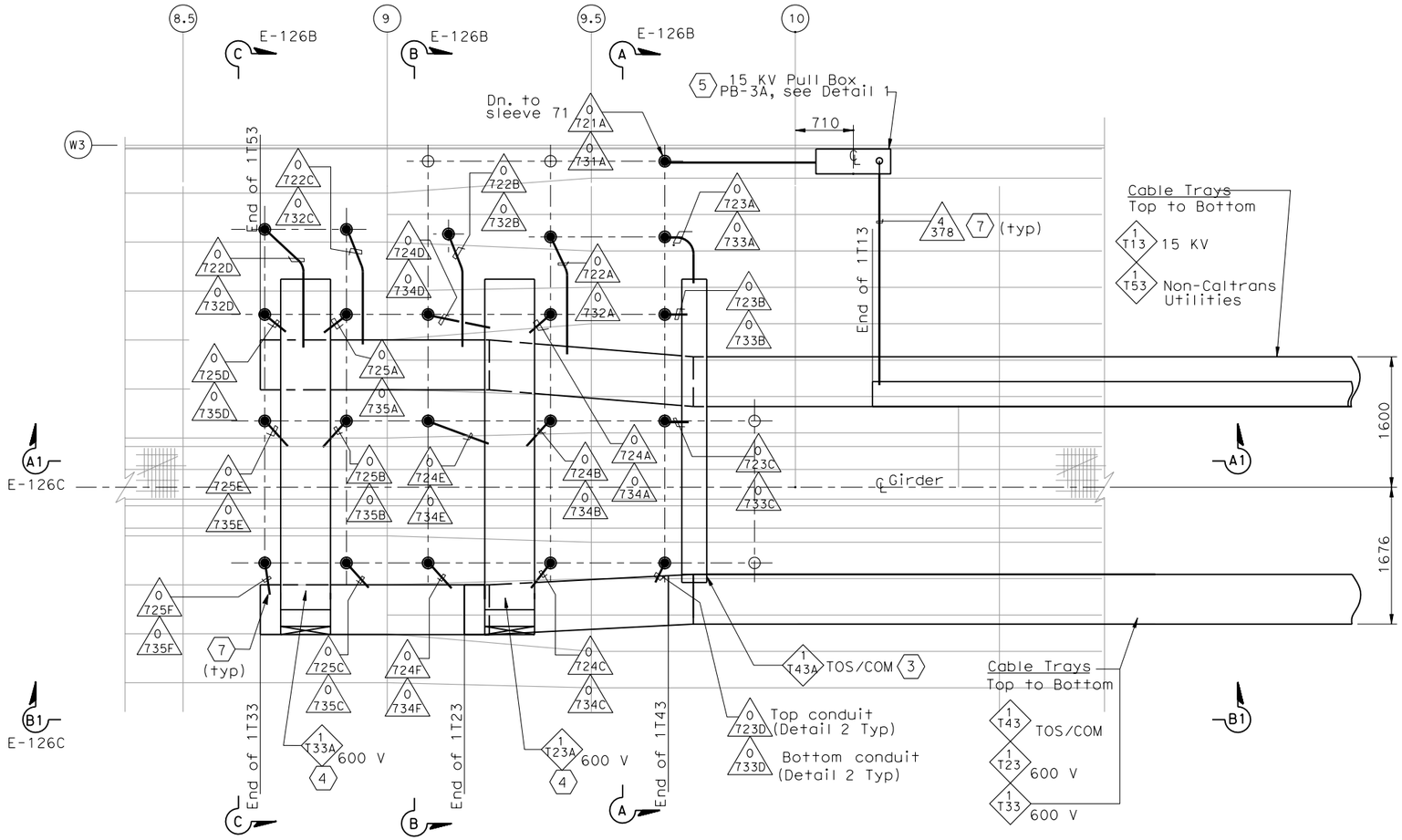

PARTIAL GIRDER CABLE TRAY-PLAN (6)

SCALE 1:150

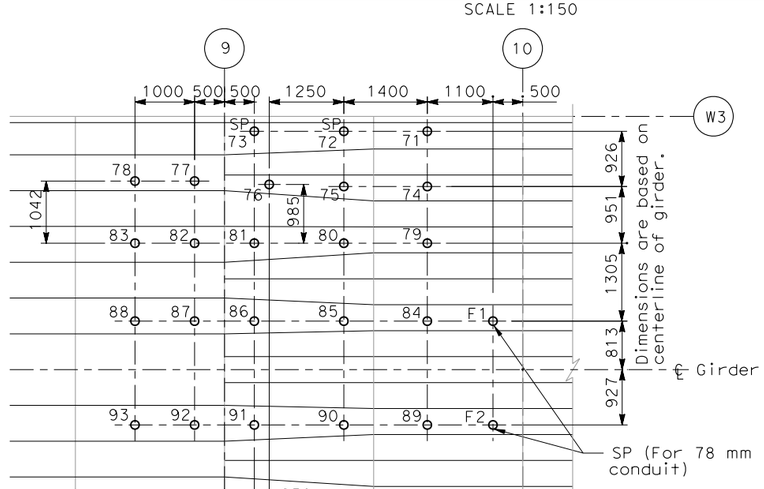

PIPE SLEEVE LOCATION-PLAN (6)

SCALE 1:100

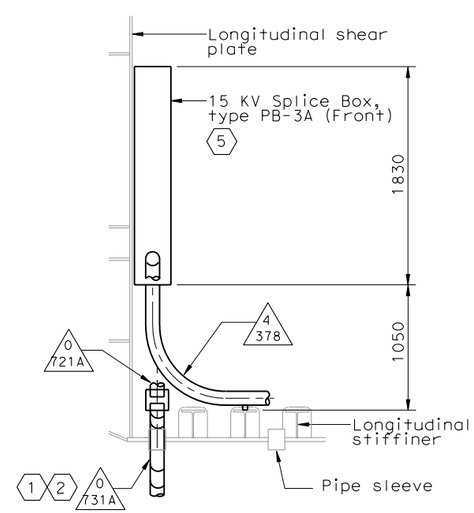

DETAIL 1

SCALE 1:50

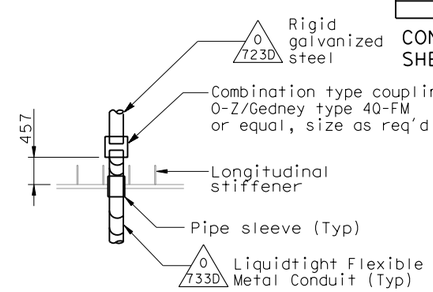

DETAIL 2

SCALE 1:50

SHEET NOTES:

1. To prevent moisture from entering girder. contractor to seal the space between sleeves and conduits.
2. Down to cable tray, for continuation see sheet E-126.
3. Provide drop out tray fitting.
4. Provided vertical bend segment type fitting. Fitting radius shall be 305mm.
5. 15 KV splice box is bolted to longitudinal shear plate and installed by field.
6. See table A sheet E-126B.
7. Provide insulated ground bushing at end of conduit.

NOTES:

1. References:
   - For circuit and conduit/cable tray schedules, see sheets starting at E-401.
2. (SP) Denotes spare pipe sleeve for future 103 mm conduit. Contractor to provide threaded cap at exterior end (Unless Otherwise Noted).
3. For cable tray supports details, see AS sheets.
4. Cable trays fittings shall be 610 radius.

REQUEST FOR INFORMATION NOT ADDRESSED IN THIS CCO REMAIN IN FORCE

MARK	DATE	DESCRIPTIONS	BY	CH'D	CCO#
0	02/25/08	CABLE TRAY CHANGES	TW	RG SE	42S1

REVISIONS

CONTRACT CHANGE ORDER NO. _____
SHEET _____ OF _____

DETAILS
SAS SUPERSTRUCTURE GIRDER WESTBOUND CABLE TRAY AND CONDUIT AT PIER W2W

SCALE AS NOTED

THIS PLAN ACCURATE FOR ELECTRICAL WORK ONLY.

THIS PLAN ACCURATE FOR ELECTRICAL WORK ONLY.

E-126A

DESIGN OVERSIGHT — BEHZAD GOLEMOHAMMADI

CALCULATED/DESIGNED BY — CHECKED BY

DATE — REVISED BY — DATE REVISED

STATE OF CALIFORNIA - DEPARTMENT OF TRANSPORTATION

Caltrans

LAST REVISION 00-00-00 — DATE PLOTTED => 7/11/2008 TIME PLOTTED => 2:47:04 PM

FOR REDUCED PLANS ORIGINAL SCALE IS IN MILLIMETERS 0 20 40 60 80

DGN FILE =>T:\13103\MS\pse\SAS Struc\CCO\SAS CCO42S1\CCO 42S1 Final Submittal 2008-07-11\04-0120f1_0178S01.dgn
USERNAME =>llorico

CU 04251 — EA 0120F1

DIST	COUNTY	ROUTE	KILOMETER POST TOTAL PROJECT	SHEET No	TOTAL SHEETS
04	SF	80	13.2/13.9	178 S2	1204

REGISTERED ELECTRICAL ENGINEER — DATE 2/22/08

PLANS APPROVAL DATE

REGISTERED PROFESSIONAL ENGINEER S. A. ESTOQUE, JR. No. E-10151 Exp. 12/31/2008 ELECTRICAL STATE OF CALIFORNIA

PB AMERICAS, Inc.
A Parsons Brinckerhoff Company
303 Second St., Suite 700N
San Francisco, CA 94107-1317

The State of California or its officers or agents shall not be responsible for the accuracy or completeness of electronic copies of this plan sheet.

Caltrans now has a web site! To get to the web site, go to http://www.dot.ca.gov

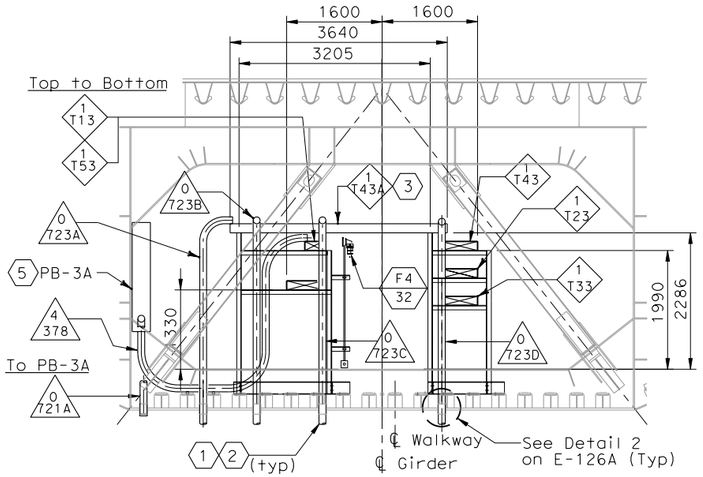

SECTION A-A

SCALE 1:100

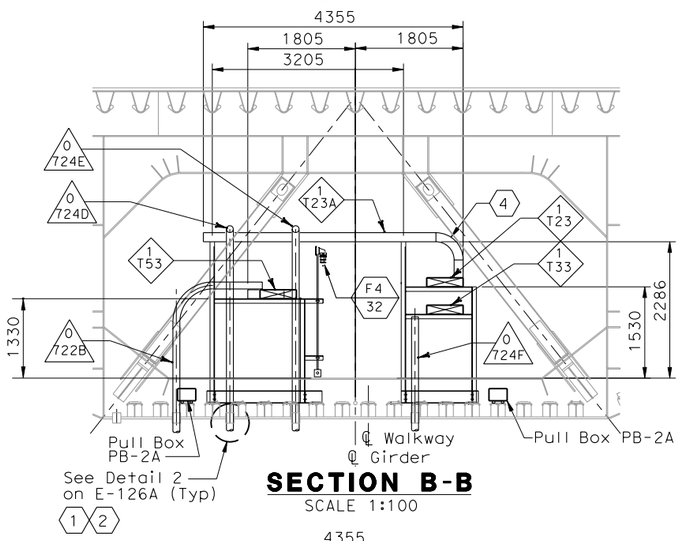

SECTION B-B

SCALE 1:100

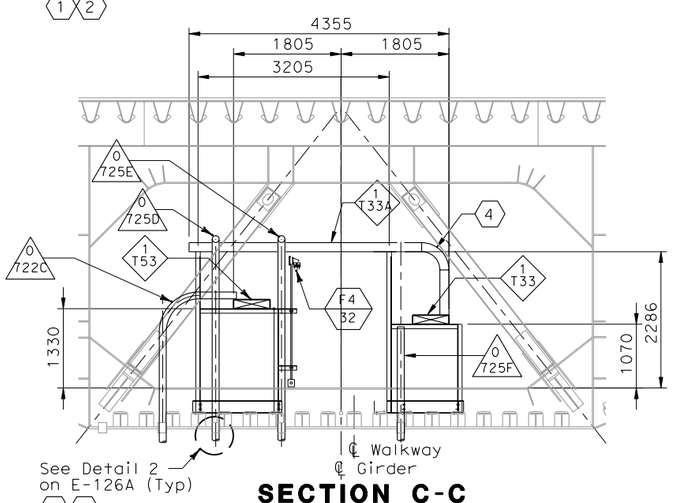

SECTION C-C

SCALE 1:100

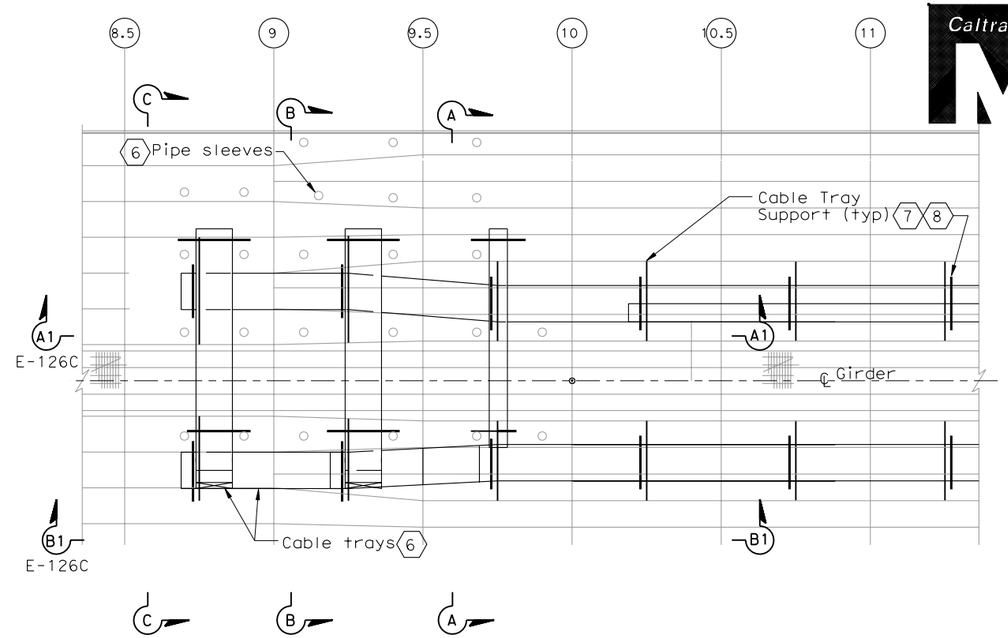

CABLE TRAY SUPPORT LOCATION-PLAN

SCALE 1:100

SHEET NOTES:

1. To prevent moisture from entering girder, Contractor to seal the space between sleeves and conduits.
2. Down to cable tray, for details see sheet E-126.
3. Provide drop out tray fitting.
4. Provide vertical bend segment type fitting. Fittting radius shall be 305 mm.
5. 15 KV splice box is bolted to longitudinal shear plate and installed by field.
6. For cable trays inside girder, pipe sleeves see sheet E-126A. The cable trays below W2 girder see sheet E-126.
7. The Contractor to provide cable tray hold down clamps.
8. For cable support see AS-16K

TABLE A (6)

Tray Number (Below Structure)	Conduit number Pipe Sleeve no. (Inside Girder)	Tray Number (Inside Girder)
T14 15 KV	721A SP SP 71 72 73	To PB-3A Pull Box
T54 Non-Caltrans Uitilities	722A 722B 722C 722D 75 76 77 78	T53 Non-Caltrans Uitilities
T49 TOS/COM	723A 723B 723C 723D 74 79 84 89	T43A TOS/COM
T29 600 V	724A 724D 725A 725D 724B 724E 80 81 82 83 85 86	T23A 600 V
T39 600 V	725B 725E 724C 724F 725C 725F 87 88 90 91 92 93	T33A T33 600 V
	- - F1 F2	

NOTES:

1. References:
   - For circuit and conduit/cable tray schedules, see sheets starting at E-401.
2. (SP) Denotes spare pipe sleeve for 103 mm conduit. Contractor to provided cap at exterior end (Unless Otherwise Noted).
3. For cable tray supports details, see AS sheets.
4. Cable trays fittings shall be 610 radius.

REQUEST FOR INFORMATION NOT ADDRESSED IN THIS CCO REMAIN IN FORCE

MARK	DATE	DESCRIPTIONS	BY	CH'D	CCO#
0	02/25/08	CABLE TRAY CHANGES	TW	RG SE	42S1

REVISIONS

CONTRACT CHANGE ORDER NO._____
SHEET _____ OF _____

DETAILS
SAS SUPERSTRUCTURE GIRDER WESTBOUND CABLE TRAY AND CONDUIT AT PIER W2W

SCALE AS NOTED

THIS PLAN ACCURATE FOR ELECTRICAL WORK ONLY.

ALL DIMENSIONS ARE IN MILLIMETERS UNLESS OTHERWISE SHOWN

E-126B

STATE OF CALIFORNIA - DEPARTMENT OF TRANSPORTATION

DESIGN OVERSIGHT — BEHZAD GOLEMOHAMMADI

CALCULATED/DESIGNED BY — CHECKED BY

DATE — REVISED BY — DATE REVISED

LAST REVISION 00-00-00

DATE PLOTTED => 7/11/2008
TIME PLOTTED => 2:47:36 PM

FOR REDUCED PLANS ORIGINAL SCALE IS IN MILLIMETERS 0 20 40 60 80

DGN FILE =>T:\13103\MS\pse\SAS Struc\CCO\SAS CCO42S1\CCO 42S1 Final Submittal 2008-07-11\04-0120f1_0178S02.dgn
USERNAME =>llorico

CU 04251 EA 0120F1

DIST	COUNTY	ROUTE	KILOMETER POST TOTAL PROJECT	SHEET No	TOTAL SHEETS
04	SF	80	13.2/13.9	178 S3	1204

REGISTERED ELECTRICAL ENGINEER — DATE 2/22/08

PLANS APPROVAL DATE

REGISTERED PROFESSIONAL ENGINEER — S. A. ESTOQUE, JR. — No. E-10151 — Exp. 12/31/2008 — ELECTRICAL — STATE OF CALIFORNIA

PB AMERICAS, Inc.
A Parsons Brinckerhoff Company
303 Second St., Suite 700N
San Francisco, CA 94107-1317

The State of California or its officers or agents shall not be responsible for the accuracy or completeness of electronic copies of this plan sheet.

Caltrans now has a web site! To get to the web site, go to http://www.dot.ca.gov

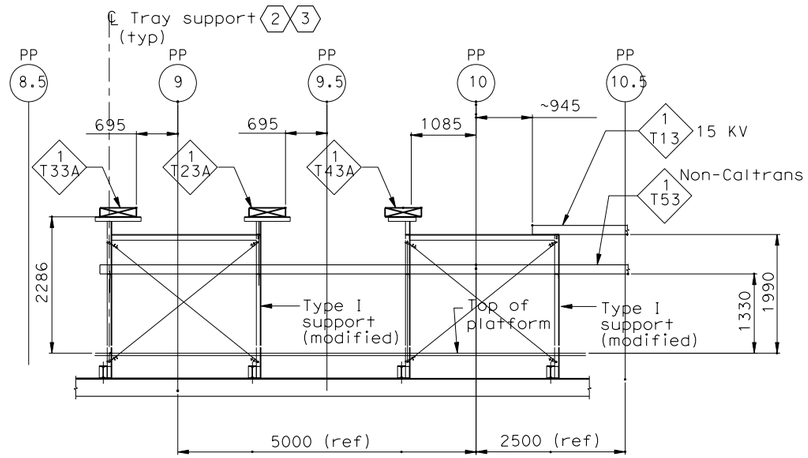

ELEVATION A1-A1

NORTH OF WB LINE PP 8.5 TO PP 10.5
SCALE 1:10

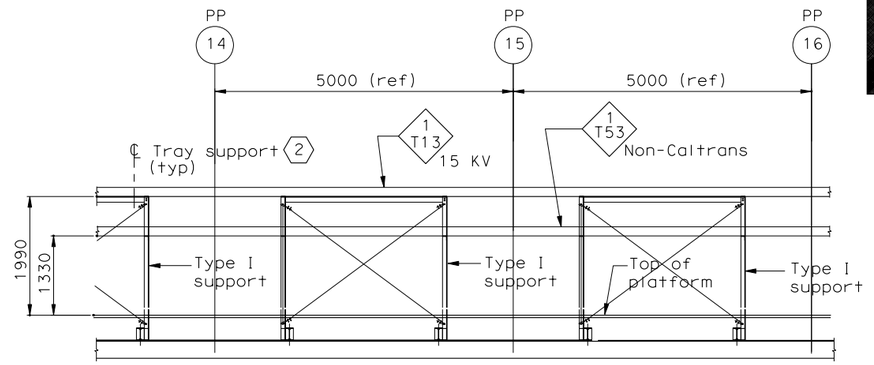

ELEVATION A2-A2

SHOWN STARTING AT PP 14
(TYPICAL CABLE TRAY SUPPORT)
SCALE 1:10

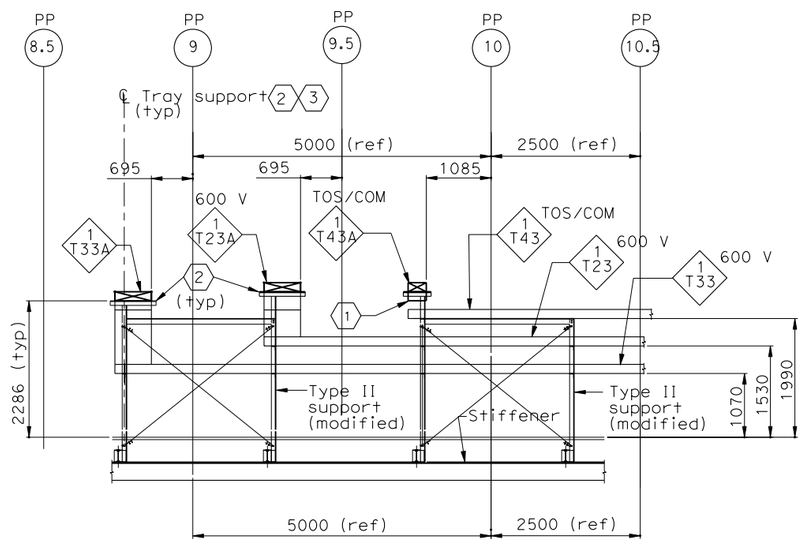

ELEVATION B1-B1

SOUTH OF WB LINE PP 8.5 TO PP 10.5
SCALE 1:10

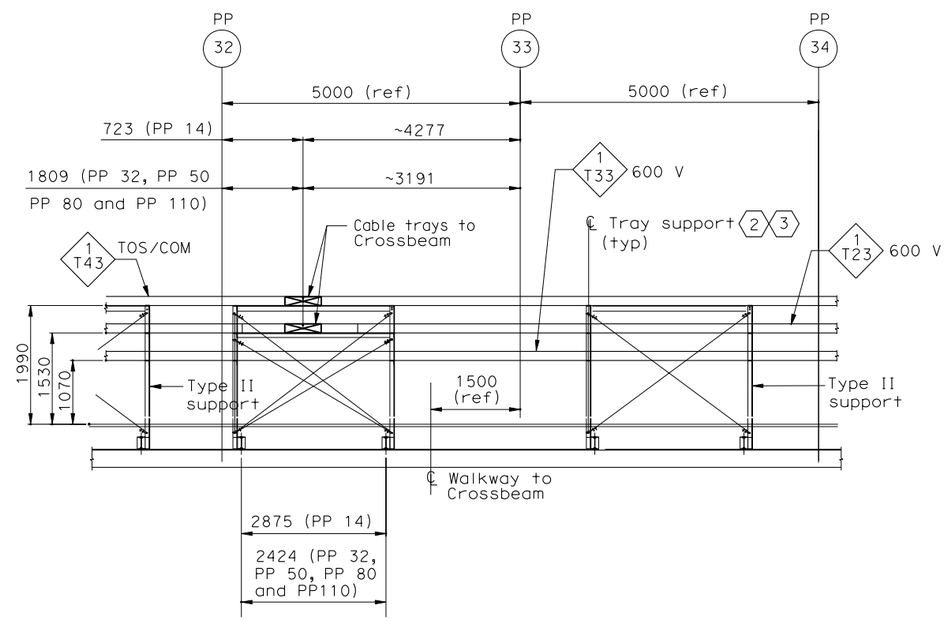

ELEVATION B2-B2

CABLE TRAY SUPPORT AT PP-32
(SIMILAR TO PP 14, PP 50, PP80 and PP110 EXCEPT AS NOTED)
SCALE 1:10

SHEET NOTES:

1. Provide drop out tray fitting.
2. The Contractor shall provide cable tray clamps at each location of tray support.
3. For cable tray support see AS-Sheets.

NOTES:

1. References:
   - For circuit and conduit/cable tray schedules, see sheets starting at E-401.
2. Conduits to cable trays not shown for clarity, see plan drawings.
3. For cable tray supports details, see AS sheets.
4. Cable trays fittings shall be 610 radius.

REQUEST FOR INFORMATION NOT ADDRESSED IN THIS CCO REMAIN IN FORCE

MARK	DATE	DESCRIPTIONS	BY	CH'D	CCO#
0	02/25/08	CABLE TRAY CHANGES	TW	RG SE	42S1

REVISIONS

CONTRACT CHANGE ORDER NO._____
SHEET _____ OF _____

DETAILS
SAS SUPERSTRUCTURE GIRDER WESTBOUND CABLE TRAY AND CONDUIT AT PIER W2W

SCALE AS NOTED

E-126C

THIS PLAN ACCURATE FOR ELECTRICAL WORK ONLY.

ALL DIMENSIONS ARE IN MILLIMETERS UNLESS OTHERWISE SHOWN

FOR REDUCED PLANS ORIGINAL SCALE IS IN MILLIMETERS 0 20 40 60 80

DGN FILE =>T:\13103\MS\pse\SAS Struc\CCO\SAS CC042S1\CCO 42S1 Final Submittal 2008-07-11\04-0120f1_0178S03.dgn
USERNAME =>llorico

CU 04251 | EA 0120F1

DATE PLOTTED => 7/11/2008
TIME PLOTTED => 2:47:56 PM

LAST REVISION 00-00-00

DESIGN OVERSIGHT: BEHZAD GOLEMOHAMMADI

CALCULATED/DESIGNED BY | CHECKED BY

DATE | REVISED BY | DATE REVISED

STATE OF CALIFORNIA - DEPARTMENT OF TRANSPORTATION
Caltrans

DIST	COUNTY	ROUTE	KILOMETER POST TOTAL PROJECT	SHEET No	TOTAL SHEETS
04	SF	80	13.2/13.9	179 R1	1204

Caltrans Metric

12/19/02
REGISTERED ELECTRICAL ENGINEER DATE

12-6-04
PLANS APPROVAL DATE

REGISTERED PROFESSIONAL ENGINEER
JENS ERLINGSSON
No. 8249
Exp. 9/30/06
ELECTRICAL
STATE OF CALIFORNIA

PB POWER, Inc.
A Parsons Brinckerhoff Company
303 Second St., Suite 700N
San Francisco, CA 94107-1317

The State of California or its officers or agents shall not be responsible for the accuracy or completeness of electronic copies of this plan sheet.

Caltrans now has a web site! To get to the web site, go to http://www.dot.ca.gov

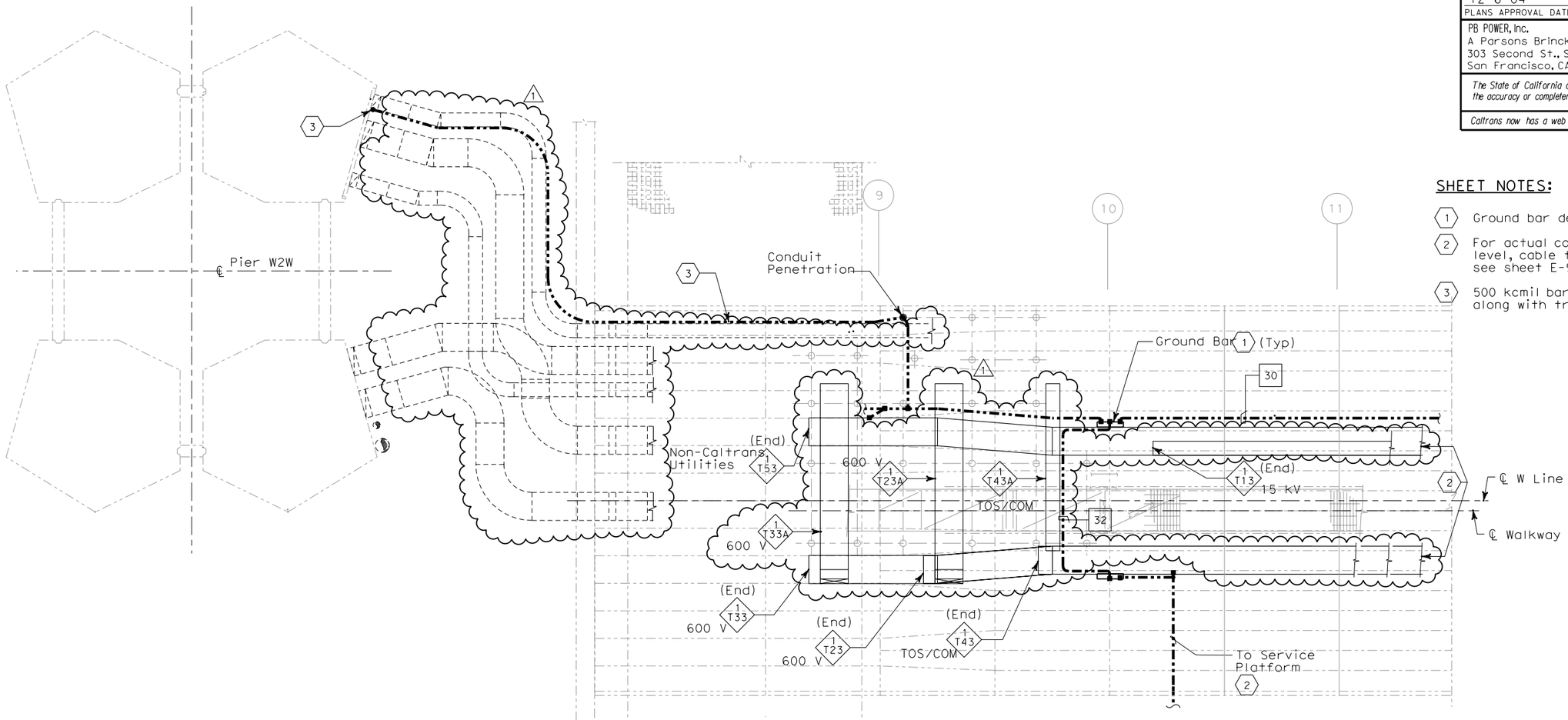

SHEET NOTES:

1. Ground bar detail see sheet E-125.
2. For actual conduit locations, see girder level, cable tray and conduits plans, see sheet E-96 thru E-101.
3. 500 kcmil bare copper ground cable run along with tray.

GIRDER PLAN - CABLE TRAY AND GROUNDING

SCALE 1:50

REGISTERED PROFESSIONAL ENGINEER
S. A. ESTOQUE, JR
No. E-10151
Exp. 12/31/2008
ELECTRICAL
STATE OF CALIFORNIA

FOR REVISION ONLY

REQUEST FOR INFORMATION NOT ADDRESSED IN THIS CCO REMAIN IN FORCE

MARK	DATE	DESCRIPTIONS	BY	CH'D	CCO#
1	02/25/08	CABLE TRAY CHANGES	RG	SE	42S1

REVISIONS

CONTRACT CHANGE ORDER NO._____
SHEET _____ OF _____

DETAILS
SAS SUPERSTRUCTURE GIRDER WESTBOUND
TYPICAL TRAY AND GROUNDING INSTALLATION AT PIER W2W

SCALE AS NOTED

E-127

STATE OF CALIFORNIA - DEPARTMENT OF TRANSPORTATION
Caltrans

DESIGN OVERSIGHT: BEHZAD GOLEMOHAMMADI

CALCULATED/DESIGNED BY	FK	DATE 08/02	REVISED BY
CHECKED BY	IAH	08/02	DATE REVISED

THIS PLAN ACCURATE FOR ELECTRICAL WORK ONLY.

ALL DIMENSIONS ARE IN MILLIMETERS UNLESS OTHERWISE SHOWN

FOR REDUCED PLANS ORIGINAL SCALE IS IN MILLIMETERS 0 20 40 60 80

DGN FILE =>T:\13103\MS\pse\SAS Struc\CCO\SAS CCO42S1\CCO 42S1 Final Submittal 2008-07-11\04-0120f1_0179R01.dgn
USERNAME =>llorico
CU 04251
EA 0120F1

LAST REVISION 00-00-00
DATE PLOTTED => 7/11/2008
TIME PLOTTED => 2:48:18 PM

DIST	COUNTY	ROUTE	KILOMETER POST TOTAL PROJECT	SHEET No	TOTAL SHEETS
04	SF	80	13.2/13.9	180 R1	1204

REGISTERED ELECTRICAL ENGINEER 12/19/02 DATE

12-6-04
PLANS APPROVAL DATE

REGISTERED PROFESSIONAL ENGINEER JENS ERLINGSSON No. 8249 Exp. 9/30/06 ELECTRICAL STATE OF CALIFORNIA

PB POWER, Inc.
A Parsons Brinckerhoff Company
303 Second St., Suite 700N
San Francisco, CA 94107-1317

The State of California or its officers or agents shall not be responsible for the accuracy or completeness of electronic copies of this plan sheet.

Caltrans now has a web site! To get to the web site, go to: http://www.dot.ca.gov

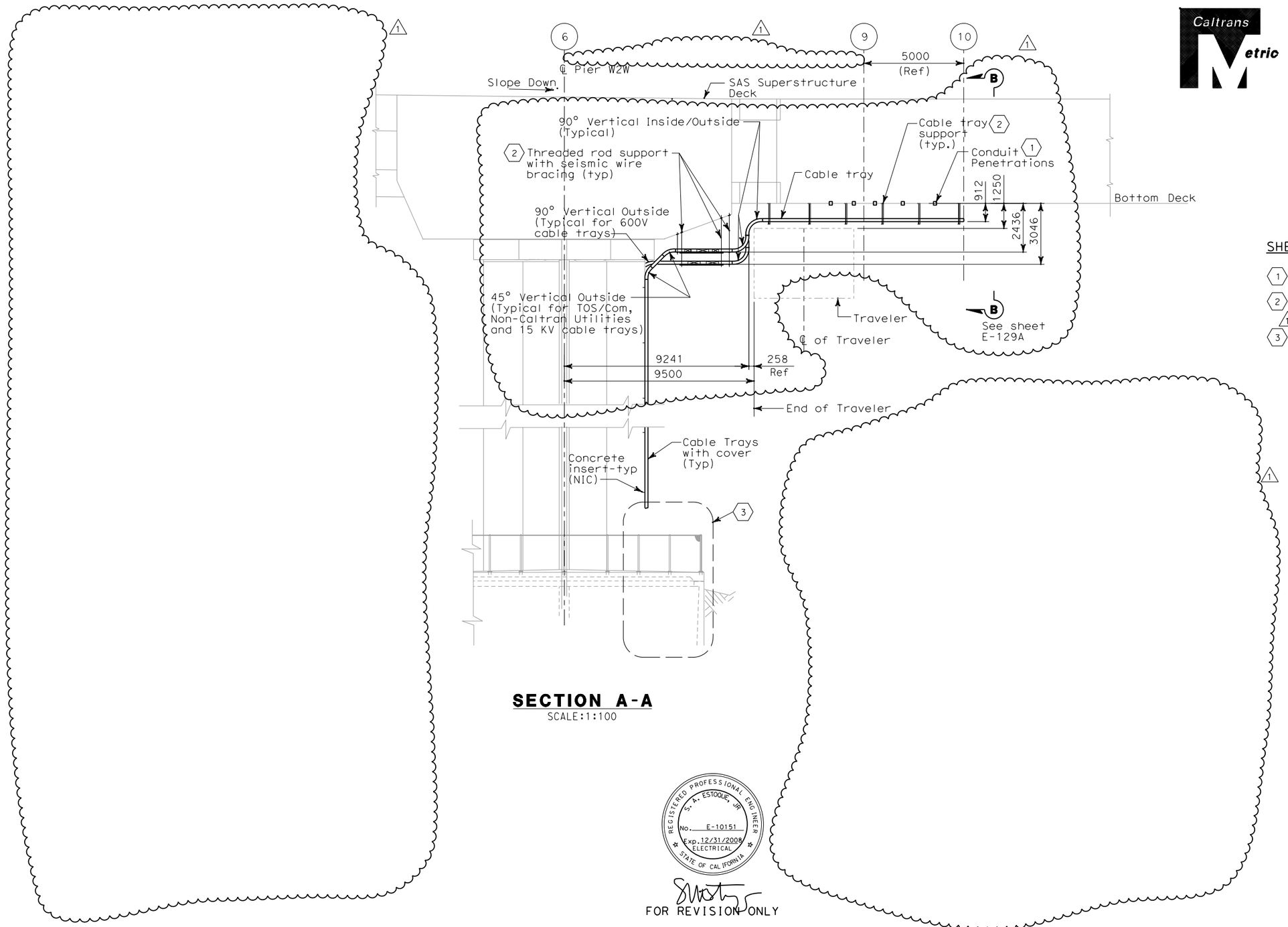

SECTION A-A
SCALE:1:100

SHEET NOTES:

1. See sheet E-126 for location.
2. For cable tray support type and location, see sheet E-126.
3. For Pier W2W details, see sheet E-20 through E-20F.

REGISTERED PROFESSIONAL ENGINEER S. A. ESTOQUE, JR. No. E-10151 Exp. 12/31/2008 ELECTRICAL STATE OF CALIFORNIA

FOR REVISION ONLY

REQUEST FOR INFORMATION NOT ADDRESSED IN THIS CCO REMAIN IN FORCE

MARK	DATE	DESCRIPTIONS	BY	CH'D	CCO#
1	02/25/08	CABLE TRAY CHANGES	RG	SE	42S1

REVISIONS

CONTRACT CHANGE ORDER NO. _____
SHEET _____ OF _____

DETAILS
SAS SUPERSTRUCTURE GIRDER WESTBOUND PIER W2W SECTION AND PLANS
SCALE AS NOTED

E-128

THIS PLAN IS ACCURATE FOR ELECTRICAL WORK ONLY.

ALL DIMENSIONS ARE IN MILLIMETERS UNLESS OTHERWISE SHOWN

FOR REDUCED PLANS ORIGINAL SCALE IS IN MILLIMETERS 0 20 40 60 80

DGN FILE =>T:\13103\MS\pse\SAS Struc\CCO\SAS CCO42S1\CCO 42S1 Final Submittal 2008-07-11\04-0120f1_0180R01.dgn
USERNAME =>llorico

CU 04251 EA 0120F1

DATE PLOTTED => 7/11/2008
TIME PLOTTED => 2:48:35 PM

LAST REVISION 00-00-00

STATE OF CALIFORNIA - DEPARTMENT OF TRANSPORTATION
Caltrans

DESIGN OVERSIGHT
BEHZAD GOLEMOHAMMADI

CALCULATED/DESIGNED BY FK
CHECKED BY IAH

DATE 08/02 REVISED BY IAH
08/02 DATE REVISED 3/04

DIST	COUNTY	ROUTE	KILOMETER POST TOTAL PROJECT	SHEET No	TOTAL SHEETS
04	SF	80	13.2/13.9	181 R1	1204

12/19/02
REGISTERED ELECTRICAL ENGINEER DATE

12-6-04
PLANS APPROVAL DATE

PB POWER, Inc.
A Parsons Brinckerhoff Company
303 Second St., Suite 700N
San Francisco, CA 94107-1317

REGISTERED PROFESSIONAL ENGINEER JENS ERLINGSSON No. 8249 Exp. 9/30/06 ELECTRICAL STATE OF CALIFORNIA

The State of California or its officers or agents shall not be responsible for the accuracy or completeness of electronic copies of this plan sheet.

Caltrans now has a web site! To get to the web site, go to: http://www.dot.ca.gov

Caltrans Metric

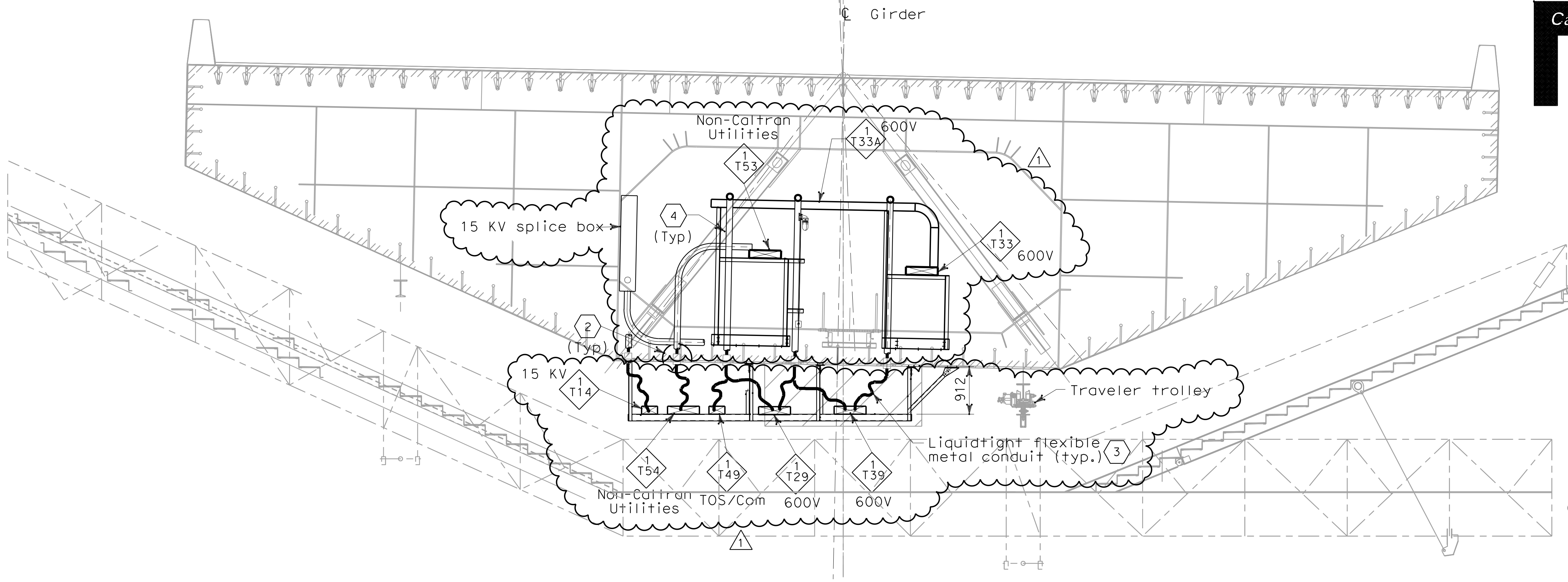

SECTION C-C
SCALE 1:50

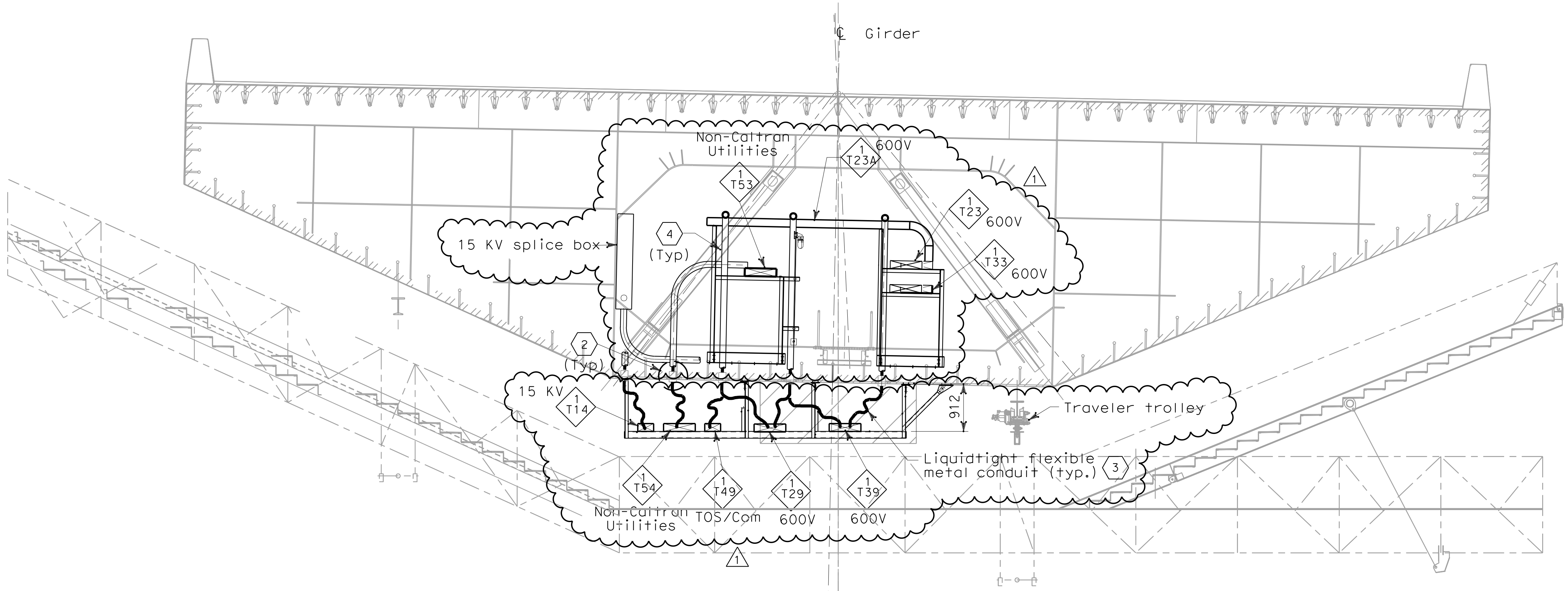

SECTION D-D
SCALE 1:50

SHEET NOTES:

1. For typical below bridge girder cable supports, see AS-sheets.
2. For location of conduit penetrations thru girder plate, see Utility Detail No. 1 and Utility Layout sheets respectively. To prevent moisture from passing inside the sleeve, Contractor shall install sealant after conduit have been installed. Spares shall be plugged and capped.
3. For installation detail of liquidtight flexible metal conduits below girder, see sheet E-126.
4. For installation detail of conduits inside girder, see sheet E-126B.

NOTES:

1. References:
   - For typical tray and conduit installation plan at Pier W2W, see sheet E-126.
   - For typical tray and grounding installation details, see sheet E-125.
   - For typical tray and conduit installation details, see sheet E-124.
   - For stanchion mounted light installation detail, see sheet E-123.
   - For girder cable tray supports, see AS-sheets.

REGISTERED PROFESSIONAL ENGINEER S. A. ESTOQUE, JR No. E-10151 Exp. 12/31/2008 ELECTRICAL STATE OF CALIFORNIA

FOR REVISION ONLY

REQUEST FOR INFORMATION NOT ADDRESSED IN THIS CCO REMAIN IN FORCE

MARK	DATE	DESCRIPTIONS	BY	CH'D	CCO#
1	02/25/08	CABLE TRAY CHANGES	RG	SE	42S1

REVISIONS

CONTRACT CHANGE ORDER NO._________
SHEET_____ OF _____

DETAILS
SAS SUPERSTRUCTURE GIRDER WESTBOUND PIER W2W SECTIONS AND TYPICAL PENETRATIONS
SCALE AS NOTED

E-129

CALCULATED/ DESIGNED BY	FK	DATE 08/02	REVISED BY	IAH
CHECKED BY	IAH	08/02	DATE REVISED	03/04

DESIGN OVERSIGHT
BEHZAD GOLEMOHAMMADI

STATE OF CALIFORNIA - DEPARTMENT OF TRANSPORTATION
Caltrans

THIS PLAN ACCURATE FOR ELECTRICAL WORK ONLY.

ALL DIMENSIONS ARE IN MILLIMETERS UNLESS OTHERWISE SHOWN

FOR REDUCED PLANS ORIGINAL SCALE IS IN MILLIMETERS 0 20 40 60 80

DGN FILE =>T:\13103\MS\pse\SAS Struc\CCO\SAS CCO42S1\CCO 42S1 Final Submittal 2008-07-11\04-0120f1_0181R01.dgn
USERNAME =>llorico

CU 04251
EA 0120F1

LAST REVISION 00-00-00
DATE PLOTTED => 7/11/2008
TIME PLOTTED => 2:49:01 PM

DIST	COUNTY	ROUTE	KILOMETER POST TOTAL PROJECT	SHEET No	TOTAL SHEETS
04	SF	80	13.2/13.9	181 S1	1204

REGISTERED ELECTRICAL ENGINEER 2/22/08 DATE

PLANS APPROVAL DATE

REGISTERED PROFESSIONAL ENGINEER S. A. ESTOQUE, JR. No. E-10151 Exp. 12/31/2008 ELECTRICAL STATE OF CALIFORNIA

PB AMERICAS, Inc.
A Parsons Brinckerhoff Company
303 Second St., Suite 700N
San Francisco, CA 94107-1317

The State of California or its officers or agents shall not be responsible for the accuracy or completeness of electronic copies of this plan sheet.

Caltrans now has a web site! To get to the web site, go to: http://www.dot.ca.gov

Caltrans Metric

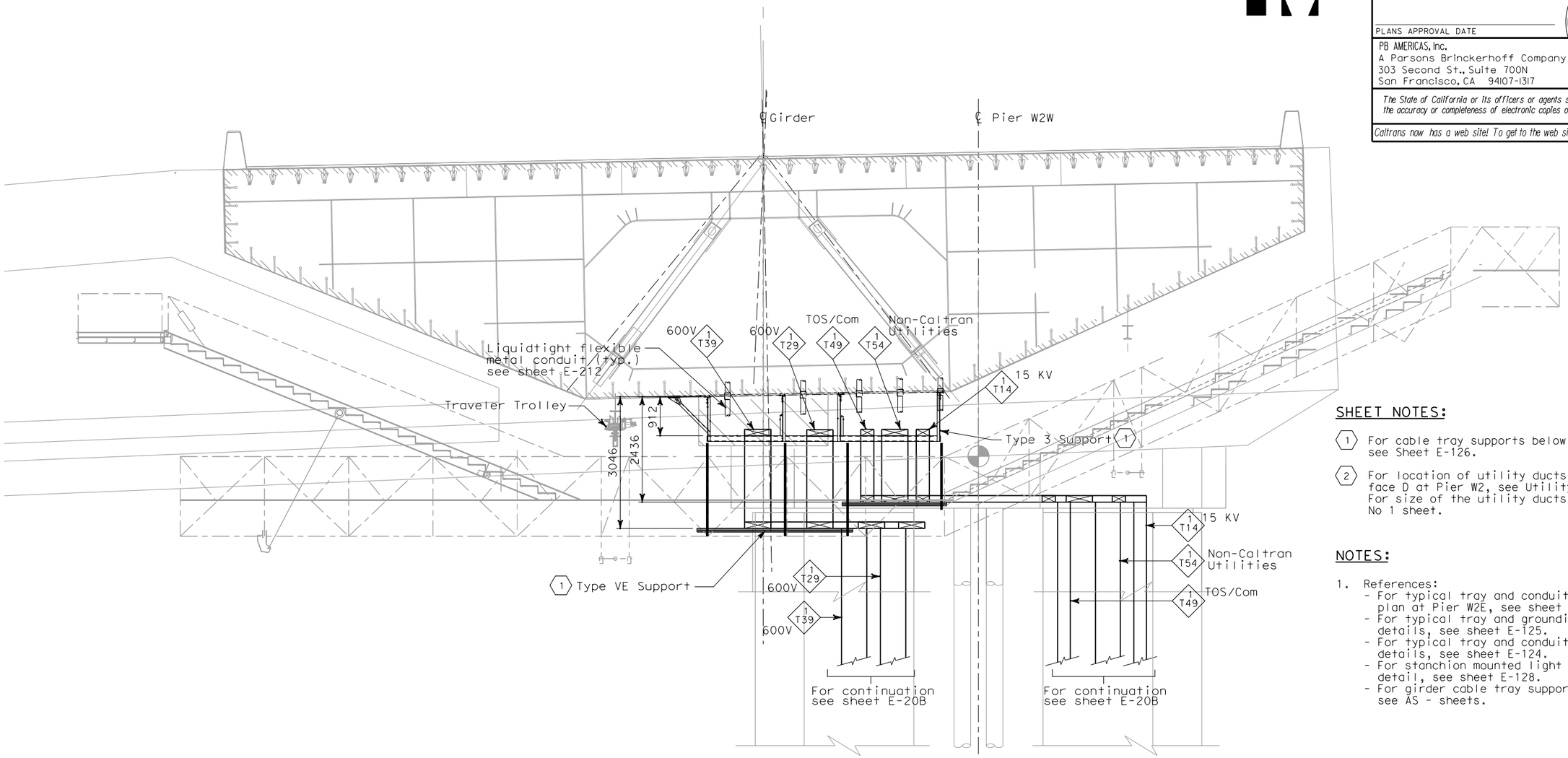

SECTION B-B

SCALE 1:50

SHEET NOTES:

1. For cable tray supports below bridge girder, see Sheet E-126.
2. For location of utility ducts through girder face D at Pier W2, see Utility Layout sheet. For size of the utility ducts, see Utility No 1 sheet.

NOTES:

1. References:
   - For typical tray and conduit installation plan at Pier W2E, see sheet E-126.
   - For typical tray and grounding installation details, see sheet E-125.
   - For typical tray and conduit installation details, see sheet E-124.
   - For stanchion mounted light installation detail, see sheet E-128.
   - For girder cable tray supports, see AS - sheets.

REQUEST FOR INFORMATION NOT ADDRESSED IN THIS CCO REMAIN IN FORCE

MARK	DATE	DESCRIPTIONS	BY	CH'D	CCO#
0	02/25/08	CABLE TRAY CHANGES	RG	SE	42S1

REVISIONS

CONTRACT CHANGE ORDER NO._____
SHEET _____ OF _____

DETAILS
SAS SUPERSTRUCTURE GIRDER WESTBOUND PIER W2W SECTIONS AND TYPICAL PENETRATIONS

SCALE AS NOTED

E-129A

DATE	REVISED BY
08/02	RG

DATE	REVISED
08/02	NE

CALCULATED/DESIGNED BY
CHECKED BY

DESIGN OVERSIGHT
BEHZAD GOLEMOHAMMADI

STATE OF CALIFORNIA - DEPARTMENT OF TRANSPORTATION
Caltrans

THIS PLAN ACCURATE FOR ELECTRICAL WORK ONLY.

ALL DIMENSIONS ARE IN MILLIMETERS UNLESS OTHERWISE SHOWN

FOR REDUCED PLANS ORIGINAL SCALE IS IN MILLIMETERS 0 20 40 60 80

DGN FILE =>T:\13103\MS\pse\SAS Struc\CCO\SAS CC042S1\CCO 42S1 Final Submittal 2008-07-11\04-0120f1_0181S01.dgn
USERNAME =>llorico

CU 04251 EA 0120F1

LAST REVISION 00-00-00
DATE PLOTTED => 7/11/2008
TIME PLOTTED => 2:49:22 PM

DIST	COUNTY	ROUTE	KILOMETER POST TOTAL PROJECT	SHEET No	TOTAL SHEETS
04	SF	80	13.2/13.9	183 R1	1204

REGISTERED ELECTRICAL ENGINEER 12/19/02 DATE

12-6-04
PLANS APPROVAL DATE

REGISTERED PROFESSIONAL ENGINEER JENS ERLINGSSON No. 8249 Exp. 9/30/06 ELECTRICAL STATE OF CALIFORNIA

PB POWER, Inc.
A Parsons Brinckerhoff Company
303 Second St., Suite 700N
San Francisco, CA 94107-1317

The State of California or its officers or agents shall not be responsible for the accuracy or completeness of electronic copies of this plan sheet.

Caltrans now has a web site! To get to the web site, go to: http://www.dot.ca.gov

Caltrans Metric

NOTE:

1. References:
   - For SAS Superstructure Girder West bound plan, see sheet E-101.
   - For SAS Main Span West bound typical section, see, sheets E-124, E-124A & E-124B.

SHEET NOTES:

(1) For utility opening detail, see structural sheets.

(2) For Type I cable tray support structure, see AS-sheets.

(3) For Type VIII cable tray support structure, see AS-sheets.

(4) For Type IX cable tray support structure, see AS-sheets.

(5) For Type II Cable Tray Support Structure, see AS-sheets. (Omit bottom rung).

(6) For Type X Cable Tray Support Structure, see AS-sheets.

(7) Deleted.

(8) Deleted.

(9) Type VIII support with the exception of angle steel bracket oriented as shown on Detail 1. For Details, see AS-sheets.

(10) For Type XI cable tray support structure, see AS-sheets.

(11) For cable tray support see drawing AS-16Q.

(12) Install grommet of neoprene rubber or similar materials to protect cable insulation from sharp metallic edges. (1)

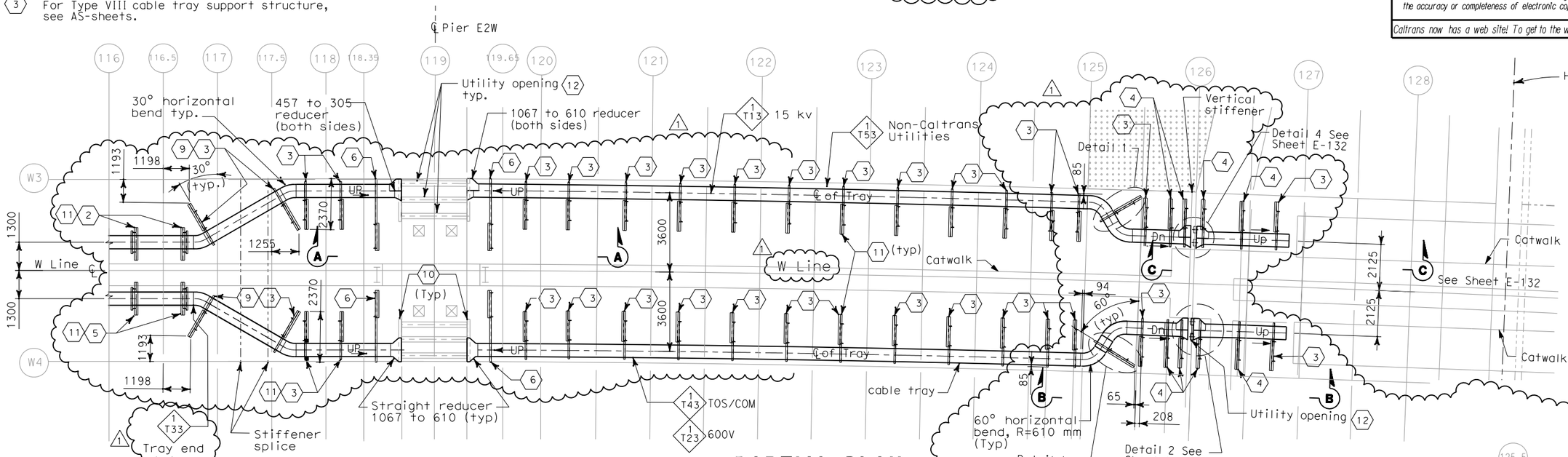

PARTIAL PLAN
SCALE 1:100

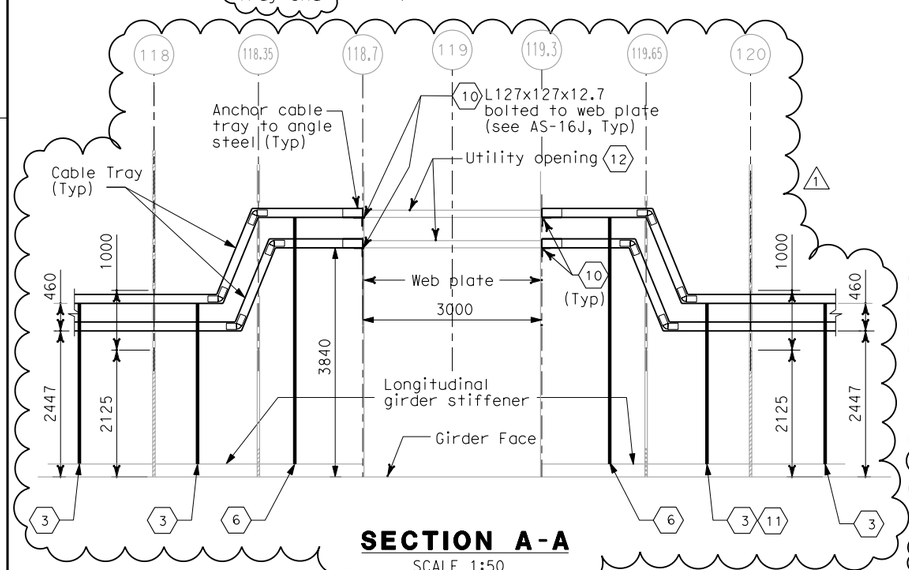

SECTION A-A
SCALE 1:50

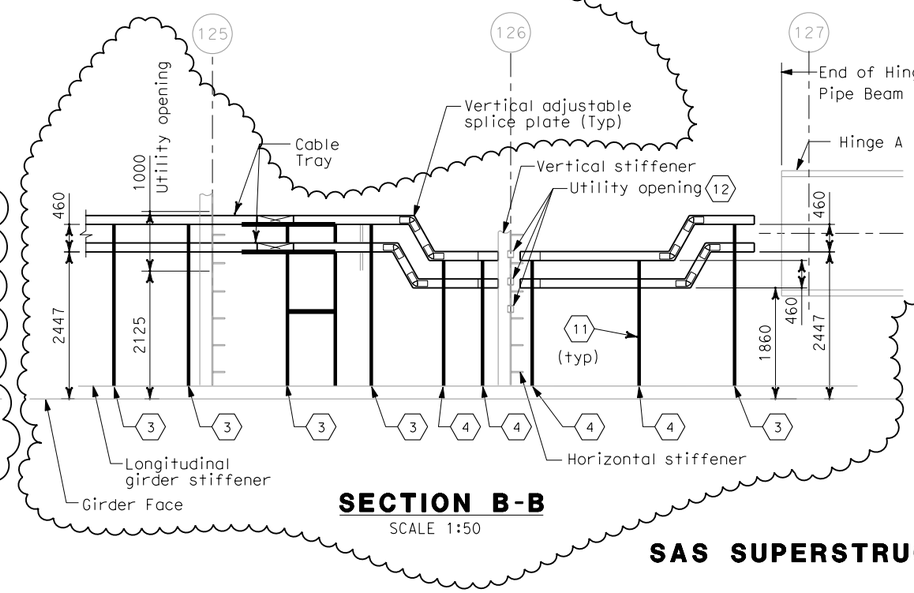

SECTION B-B
SCALE 1:50

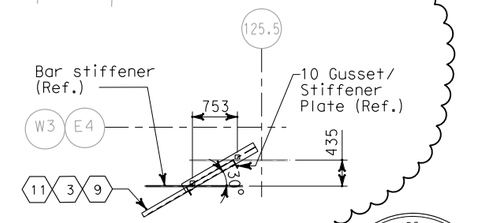

DETAIL 1
SCALE 1:100

REGISTERED PROFESSIONAL ENGINEER S. A. ESTOQUE, JR. No. E-10151 Exp. 12/31/2008 ELECTRICAL STATE OF CALIFORNIA

FOR REVISION ONLY

REQUEST FOR INFORMATION NOT ADDRESSED IN THIS CCO REMAIN IN FORCE

MARK	DATE	DESCRIPTIONS	BY	CH'D	CCO#
1	02/25/08	CABLE TRAY CHANGES	TW	RG SE	42S1

REVISIONS

CONTRACT CHANGE ORDER NO._____
SHEET _____ OF _____

DETAILS
SAS SUPERSTRUCTURE GIRDER WESTBOUND HINGE AW
SCALE AS NOTED

E-131

THIS PLAN ACCURATE FOR ELECTRICAL WORK ONLY.

ALL DIMENSIONS ARE IN MILLIMETERS UNLESS OTHERWISE SHOWN

FOR REDUCED PLANS ORIGINAL SCALE IS IN MILLIMETERS 0 20 40 60 80

DGN FILE =>T:\13103\MS\pse\SAS Struc\CCO\SAS CC042S1\CCO 42S1 Final Submittal 2008-07-11\04-0120f1_0183R01.dgn
USERNAME =>llorico

CU 04251 EA 0120F1

MARK	DATE	DESCRIPTIONS	BY	CH'D	CCO#
	3/04	REVISED BY / DATE REVISED	IAH		
	08/02	CALCULATED/DESIGNED BY / CHECKED BY	FK	IAH	

DESIGN OVERSIGHT
BEHZAD GOLEMOHAMMADI

STATE OF CALIFORNIA - DEPARTMENT OF TRANSPORTATION
Caltrans

LAST REVISION 00-00-00
DATE PLOTTED => 7/11/2008
TIME PLOTTED => 2:49:41 PM

DIST	COUNTY	ROUTE	KILOMETER POST TOTAL PROJECT	SHEET No	TOTAL SHEETS
04	SF	80	13.2/13.9	184 R1	1204

Caltrans Metric

12/19/02
REGISTERED ELECTRICAL ENGINEER DATE

12-6-04
PLANS APPROVAL DATE

REGISTERED PROFESSIONAL ENGINEER JENS ERLINGSSON No. 8249 Exp. 9/30/06 ELECTRICAL STATE OF CALIFORNIA

PB POWER, Inc.
A Parsons Brinckerhoff Company
303 Second St., Suite 700N
San Francisco, CA 94107-1317

The State of California or its officers or agents shall not be responsible for the accuracy or completeness of electronic copies of this plan sheet.

Caltrans now has a web site! To get to the web site, go to http://www.dot.ca.gov

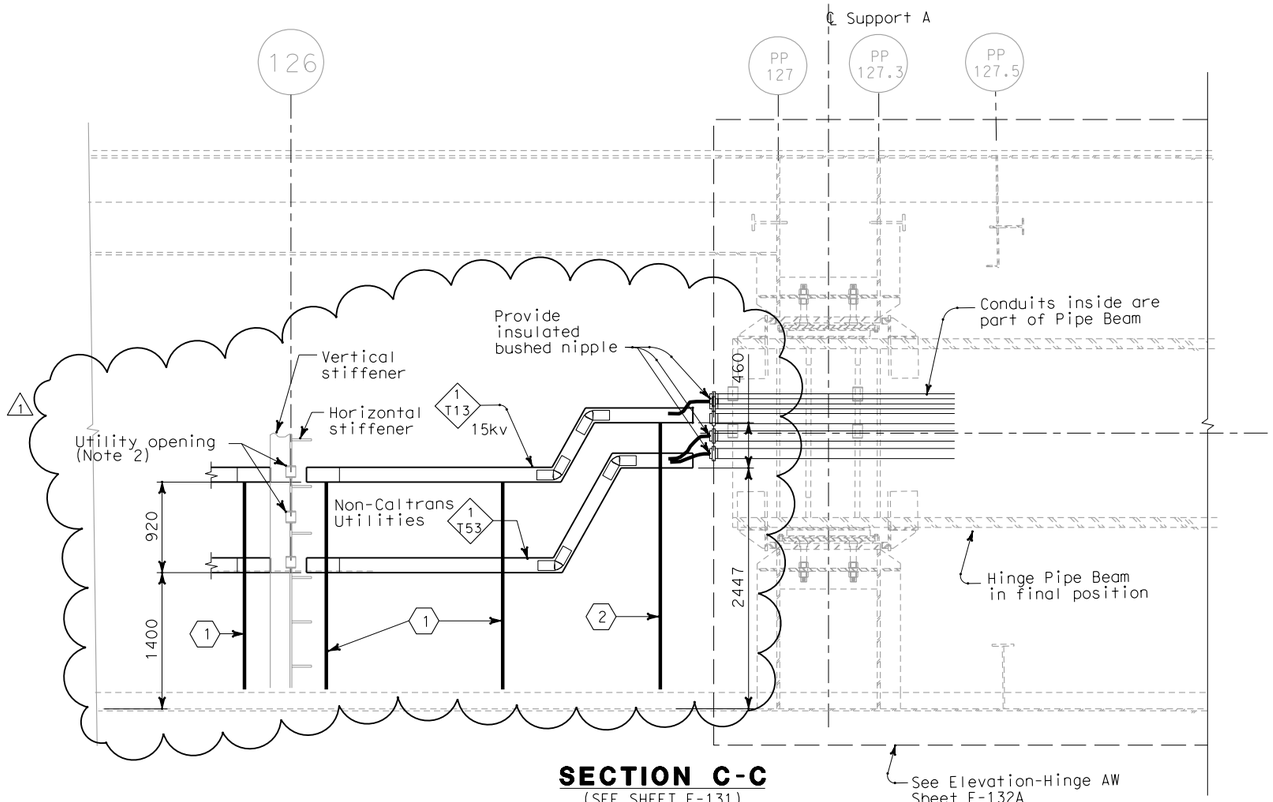

SECTION C-C
(SEE SHEET E-131)
SCALE 1:30

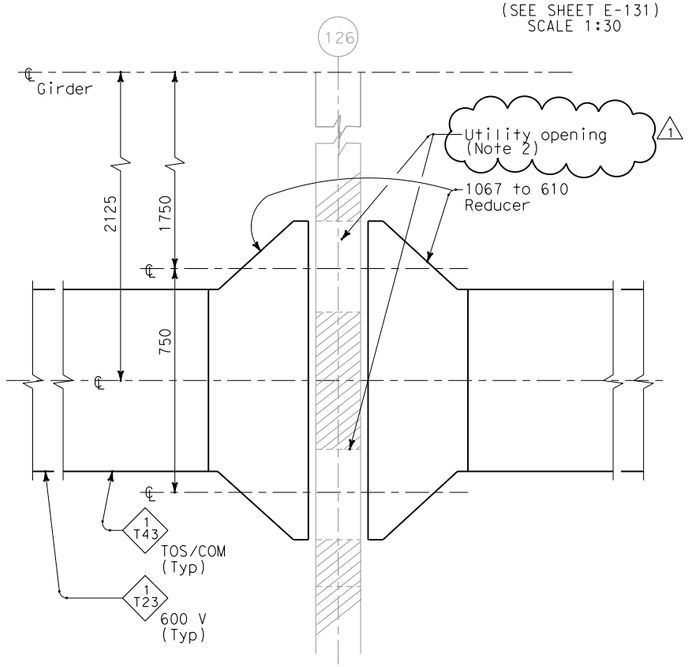

DETAIL 2
(SEE E-131)
SCALE 1:10

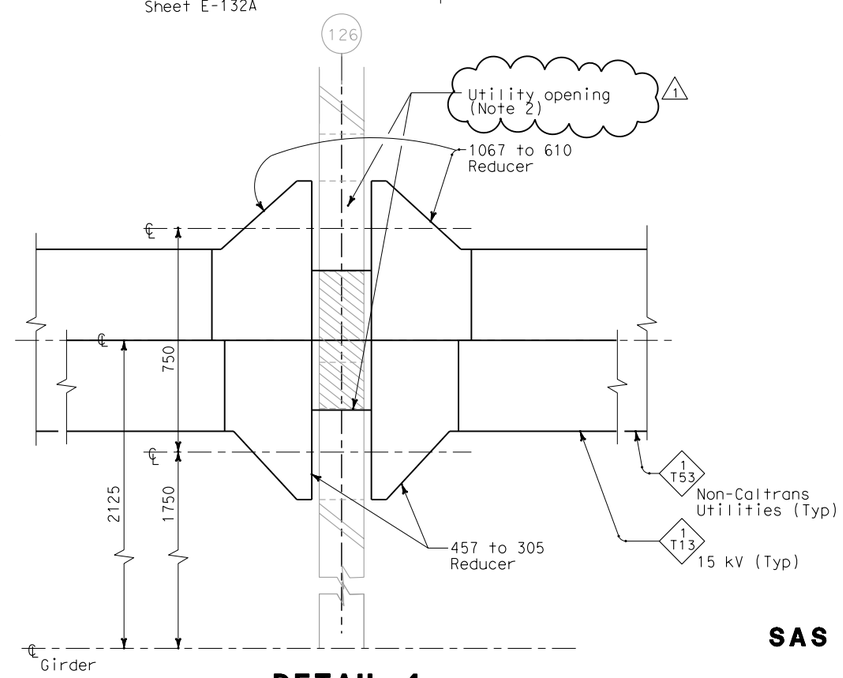

DETAIL 4
(SEE E-131)
SCALE 1:10

NOTES:

1. For utility opening details at panel point 126, see Structural sheets.
2. Install grommet of neoprene rubber or similar materials to protect cable insulation from sharp metallic edges.

SHEET NOTES:

1. For type IX cable tray support structure, see AS-15.
2. For type VIII cable tray support structure, see AS-15.

REGISTERED PROFESSIONAL ENGINEER S. A. ESTOQUE, JR No. E-10151 Exp. 12/31/2008 ELECTRICAL STATE OF CALIFORNIA

FOR REVISION ONLY

REQUEST FOR INFORMATION NOT ADDRESSED IN THIS CCO REMAIN IN FORCE

MARK	DATE	DESCRIPTIONS	BY	CH'D	CCO#
1	02/25/08	CABLE TRAY CHANGES	MP	RG SE	42S1

REVISIONS

CONTRACT CHANGE ORDER NO._____
SHEET _____ OF _____

DETAILS
SAS SUPERSTRUCTURE GIRDER WESTBOUND HINGE AW
SCALE AS NOTED

E-132

THIS PLAN ACCURATE FOR ELECTRICAL WORK ONLY.

ALL DIMENSIONS ARE IN MILLIMETERS UNLESS OTHERWISE SHOWN

FOR REDUCED PLANS ORIGINAL SCALE IS IN MILLIMETERS 0 20 40 60 80

DGN FILE =>T:\13103\MS\pse\SAS Struc\CCO\SAS CCO42S1\CCO 42S1 Final Submittal 2008-07-11\04-0120f1_0184R01.dgn
USERNAME =>llorico
CU 04251
EA 0120F1

DATE PLOTTED => 7/11/2008
TIME PLOTTED => 2:50:01 PM
LAST REVISION 00-00-00

STATE OF CALIFORNIA - DEPARTMENT OF TRANSPORTATION
Caltrans

DESIGN OVERSIGHT
BEHZAD GOLEMOHAMMADI

CALCULATED/ DESIGNED BY	FK	DATE 08/02	REVISED BY	EJL
CHECKED BY	IAH	08/02	DATE REVISED	2/04

DIST	COUNTY	ROUTE	KILOMETER POST TOTAL PROJECT	SHEET No	TOTAL SHEETS
04	SF	80	13.2/13.9	187 R1	1204

Jens Erlingsson 2/6/04
REGISTERED ELECTRICAL ENGINEER DATE

12-6-04
PLANS APPROVAL DATE

REGISTERED PROFESSIONAL ENGINEER JENS ERLINGSSON No. 8249 Exp. 9/30/06 ELECTRICAL STATE OF CALIFORNIA

PB POWER, Inc.
A Parsons Brinckerhoff Company
303 Second St., Suite 700N
San Francisco, CA 94107-1317

The State of California or its officers or agents shall not be responsible for the accuracy or completeness of electronic copies of this plan sheet.

Caltrans now has a web site! To get to the web site, go to http://www.dot.ca.gov

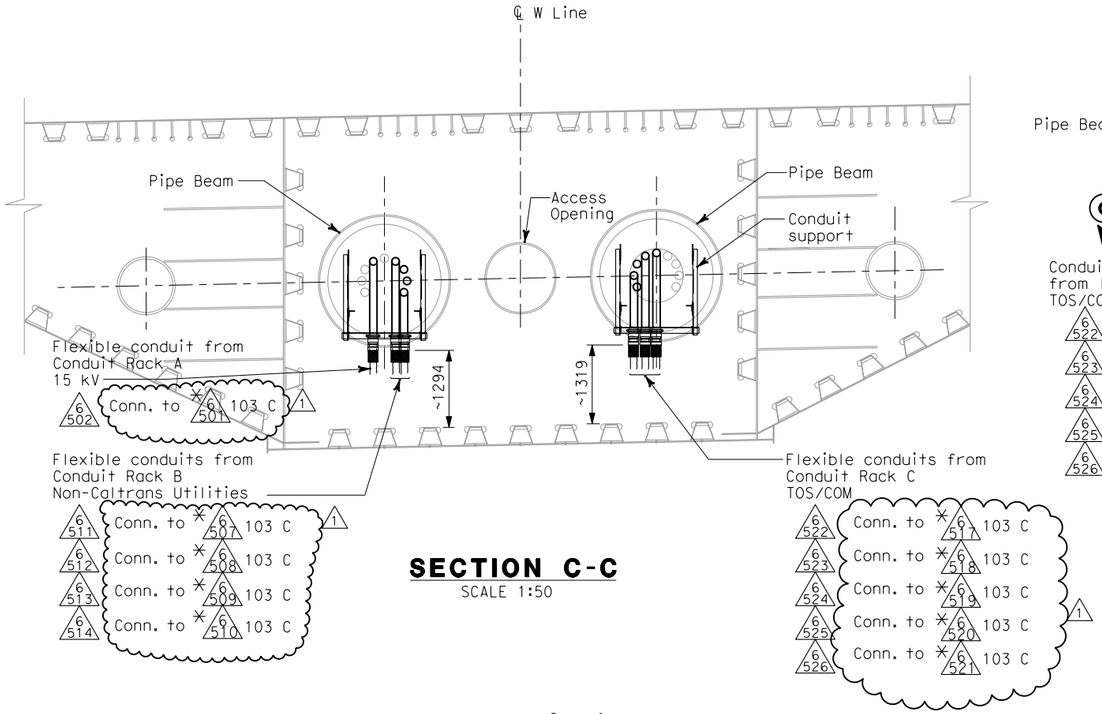

SECTION C-C
SCALE 1:50

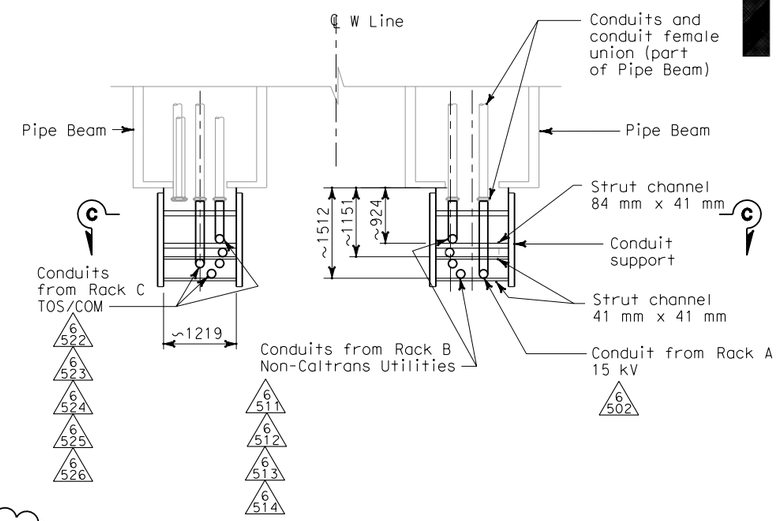

PLAN - DETAIL 1
SCALE 1:50

NOTES:

1. Materials, hardware and fittings shall be galvanized or stainless steel. For additional requirements, see Electrical Special Provisions.
2. References:
   - For Westbound plans and sections, see sheets E-101A and E-132A.
3. Existing conduits (*) inside pipe beam are supplied in Skyway contract.

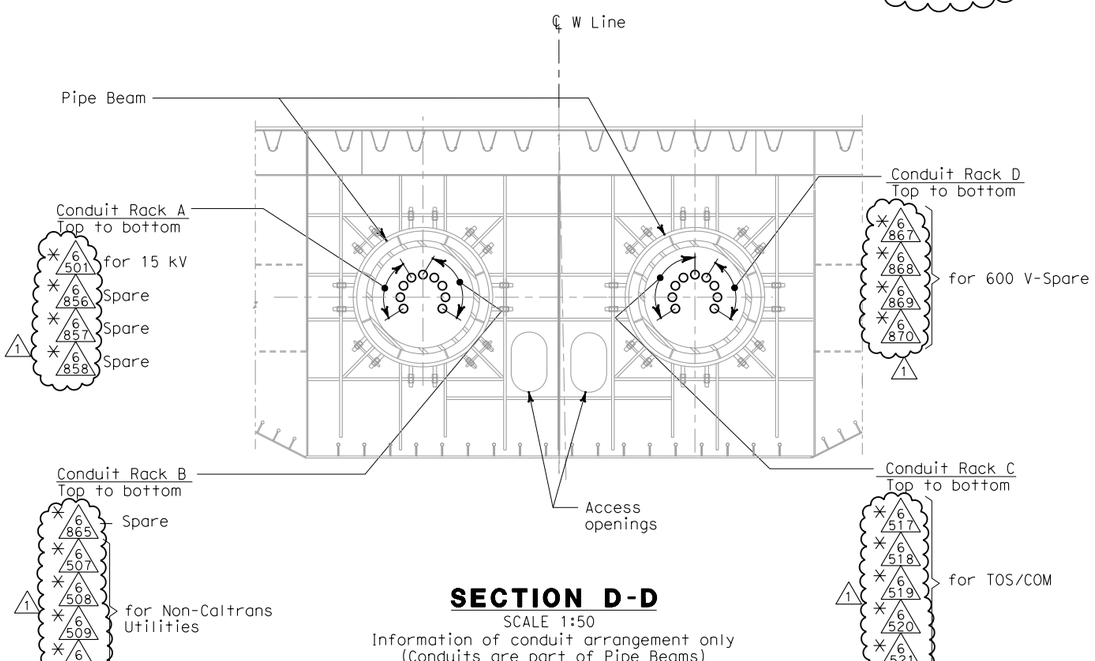

SECTION D-D
SCALE 1:50
Information of conduit arrangement only
(Conduits are part of Pipe Beams)

REGISTERED PROFESSIONAL ENGINEER S. A. ESTOQUE, JR No. E-10151 Exp. 12/31/2008 ELECTRICAL STATE OF CALIFORNIA

FOR REVISION ONLY

REQUEST FOR INFORMATION NOT ADDRESSED IN THIS CCO REMAIN IN FORCE

MARK	DATE	DESCRIPTIONS	BY	CH'D	CCO#
1	02/25/08	CABLE TRAY CHANGES	JD	RG SE	42S1

REVISIONS

CONTRACT CHANGE ORDER NO._____
SHEET _____ OF _____

DETAILS
SAS SUPERSTRUCTURE AND SKYWAY STRUCTURE GIRDER INTERFACE WESTBOUND HINGE AW SUPPORTS
SCALE AS NOTED

E-132C

STATE OF CALIFORNIA - DEPARTMENT OF TRANSPORTATION
Caltrans

DESIGN OVERSIGHT: BEHZAD GOLEMOHAMMADI
CALCULATED/DESIGNED BY: CYF DATE 12/03 REVISED BY: EJL
CHECKED BY: EJL 1/04 DATE REVISED: 2/04

THIS PLAN ACCURATE FOR ELECTRICAL WORK ONLY.

ALL DIMENSIONS ARE IN MILLIMETERS UNLESS OTHERWISE SHOWN

FOR REDUCED PLANS ORIGINAL SCALE IS IN MILLIMETERS 0 20 40 60 80

DGN FILE =>T:\13103\MS\pse\SAS Struc\CCO\SAS CCO42S1\CCO 42S1 Final Submittal 2008-07-11\04-0120f1_0187R01.dgn
USERNAME =>llorico
CU 04251 EA 0120F1

LAST REVISION 00-00-00
DATE PLOTTED => 7/11/2008
TIME PLOTTED => 2:50:35 PM

DIST	COUNTY	ROUTE	KILOMETER POST TOTAL PROJECT	SHEET No	TOTAL SHEETS
04	SF	80	13.2/13.9	215 R2	1204

REGISTERED ELECTRICAL ENGINEER 12/19/02 DATE

12-6-04
PLANS APPROVAL DATE

REGISTERED PROFESSIONAL ENGINEER JENS ERLINGSSON No. 8249 Exp. 9/30/06 ELECTRICAL STATE OF CALIFORNIA

PB POWER, Inc.
A Parsons Brinckerhoff Company
303 Second St., Suite 700N
San Francisco, CA 94107-1317

The State of California or its officers or agents shall not be responsible for the accuracy or completeness of electronic copies of this plan sheet.

Caltrans now has a web site! To get to the web site, go to http://www.dot.ca.gov

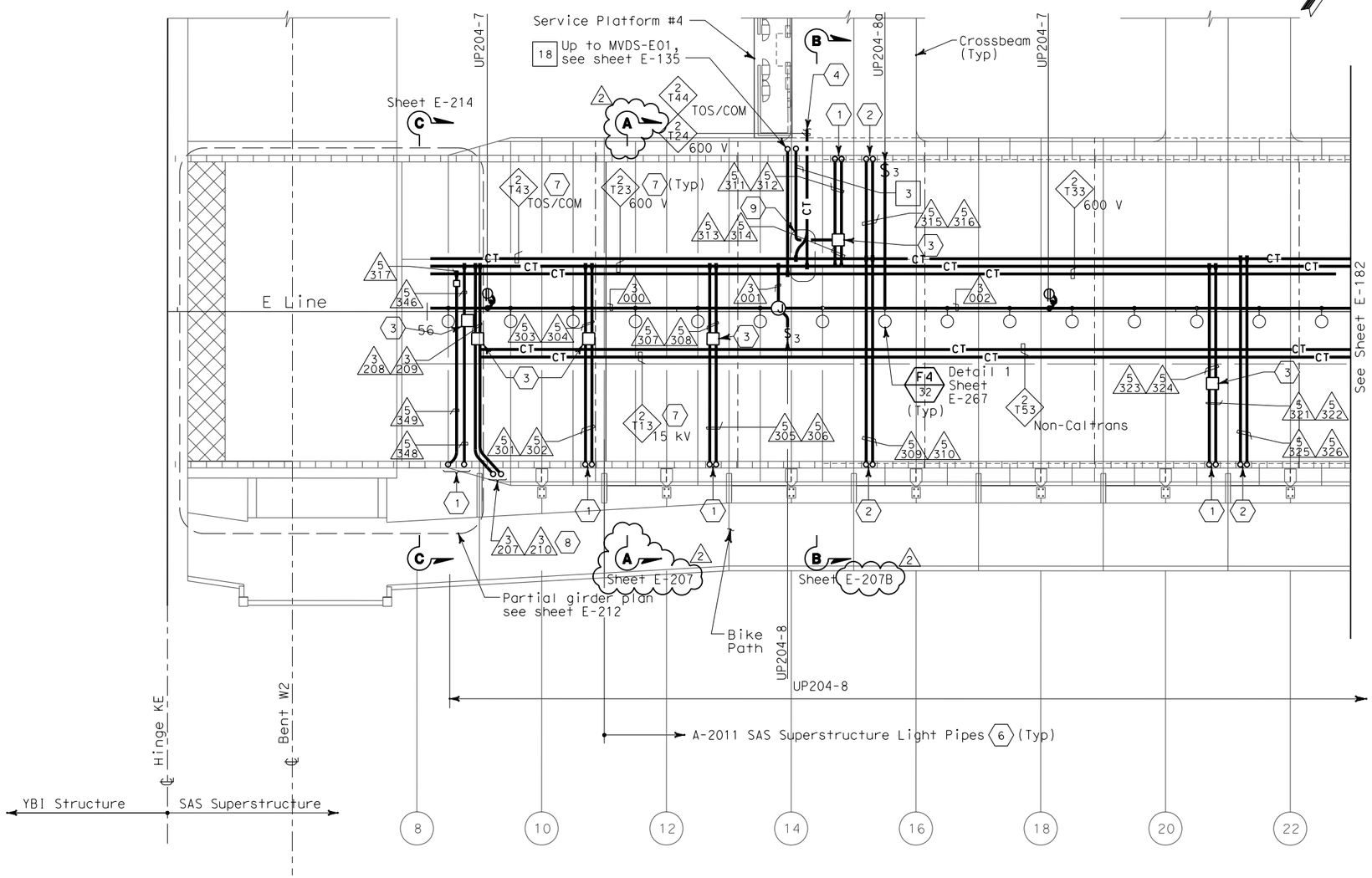

SAS SUPERSTRUCTURE - CONDUIT AND CABLE TRAY PLAN

SHEET NOTES:

1. Conduit up to PB-LTG located in barrier, see sheet E-135.
2. Conduit up to PB-COM located in barrier, see sheet E-135.
3. PB-2A, locate on top of floor.
4. For cable tray run and lighting inside crossbeam, see sheet E-114.
5. For lighting inside crossbeam, see sheet E-119.
6. For future light pipes. see sheets E-202 thru E-205. For light pipe schedule, see sheet E-217.
7. For cable tray & ground bar support, refer to sheet E-208.
8. Up to suspension cable lighting, for continuation see sheet E-135.
9. For fiber splice tray detail. Refer to sheet E-211.

NOTES:

1. References:
   - TOS equipment is shown for conduit routing only. For typical details of TOS controller and devices, see sheets E-344 through E-346.
   - For types of pull boxes, splice boxes and enclosures, see sheet E-169.
   - For bridge grounding plan, see sheet E-196.
   - For circuit and conduit/cable tray schedules, see sheets starting at E-401.
2. For other work related to Hinge KE and items not shown on this sheet, see Electrical Special Provisions.
3. The girder lighting fixtures are shown diagrammatically.Contractor shall install fixtures at railing posts with a maximum of 8000 mm between fixtures. For types and typical lighting fixture installation details, see sheet E-206.
4. The cable trays are shown diagrammatically. For typical girder cable tray plans and sections, see sheets E-207 and E-208.

REGISTERED PROFESSIONAL ENGINEER FADI WALIEDDINE No. 11465 Exp. 12/31/2009 ELECTRICAL STATE OF CALIFORNIA

FOR REVISION ONLY

REQUEST FOR INFORMATION NOT ADDRESSED IN THIS CCO REMAIN IN FORCE

MARK	DATE	DESCRIPTIONS	BY	CH'D	CCO#
2	02/25/08	CABLE TRAY CHANGES	RG	FW	42S1
1	02/19/08	ELECTRICAL MODIFICATIONS	MP EL	RR	42

REVISIONS

CONTRACT CHANGE ORDER NO._____
SHEET _____ OF _____

SAS SUPERSTRUCTURE GIRDER EASTBOUND
LIGHTING AND ELECTRICAL SYSTEMS
SCALE 1:200

E-181

THIS PLAN IS ACCURATE FOR ELECTRICAL WORK ONLY.

ALL DIMENSIONS ARE IN METERS UNLESS OTHERWISE SHOWN

FOR REDUCED PLANS ORIGINAL SCALE IS IN MILLIMETERS 0 20 40 60 80

DGN FILE =>T:\13103\MS\pse\SAS Struc\CCO\SAS CCO42S1\CCO 42S1 Final Submittal 2008-07-11\04-0120f1_0215R02.dgn
USERNAME =>llorico

CU 04251 EA 0120F1

LAST REVISION 00-00-00
DATE PLOTTED => 7/11/2008
TIME PLOTTED => 2:50:54 PM

STATE OF CALIFORNIA - DEPARTMENT OF TRANSPORTATION
Caltrans

DESIGN OVERSIGHT
BEHZAD GOLEMOHAMMADI

CALCULATED/DESIGNED BY EDC
CHECKED BY CYF

DATE	REVISED BY
08/02	

DATE	REVISED
08/02	

DIST	COUNTY	ROUTE	KILOMETER POST TOTAL PROJECT	SHEET No	TOTAL SHEETS
04	SF	80	13.2/13.9	216 R1	1204

REGISTERED ELECTRICAL ENGINEER 12/19/02 DATE

12-6-04
PLANS APPROVAL DATE

REGISTERED PROFESSIONAL ENGINEER JENS ERLINGSSON No. 8249 Exp. 9/30/06 ELECTRICAL STATE OF CALIFORNIA

PB POWER, Inc.
A Parsons Brinckerhoff Company
303 Second St., Suite 700N
San Francisco, CA 94107-1317

The State of California or its officers or agents shall not be responsible for the accuracy or completeness of electronic copies of this plan sheet.

Caltrans now has a web site! To get to the web site, go to http://www.dot.ca.gov

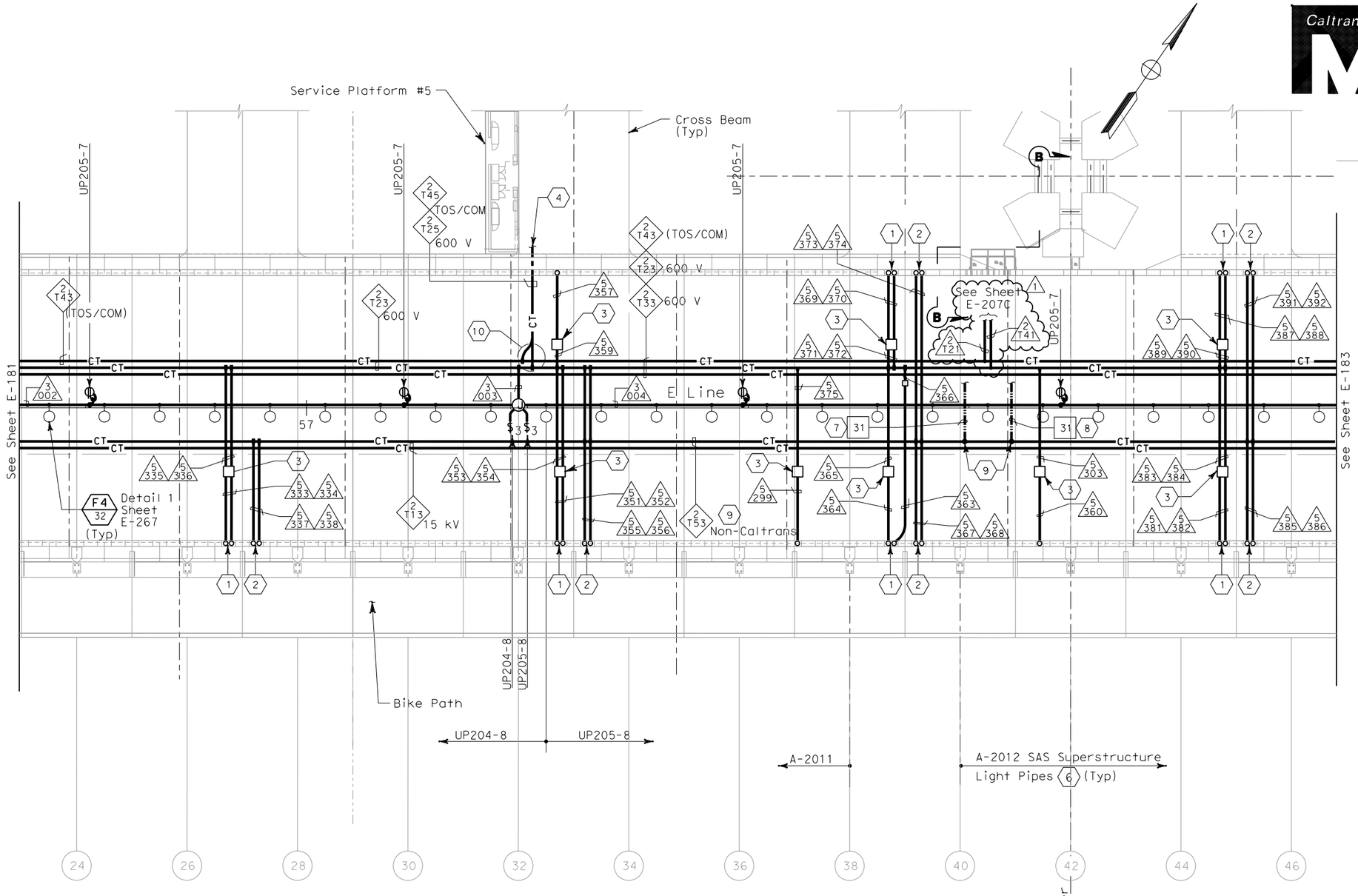

SHEET NOTES:

1. Conduit up to PB-LTG located in barrier, see sheet E-136.
2. Conduit up to PB-COM located in barrier, see sheet E-136.
3. PB-2A, locate on top of floor.
4. For cable tray run and lighting inside crossbeam, see sheet E-115.
5. For lighting inside crossbeam, see sheet E-119.
6. For future light pipe, see sheets E-202 thru E-204. For light pipe schedule, see sheet E-217.
7. Routed inside conduit 3330A.
8. Routed inside conduit 3339A.
9. 250 kcmil copper grounding conductor exothermically welded to 500 kcmil system grounding conductor.
10. For fiber splice tray detail, refer to sheet E-355.

NOTES:

1. References:
   - TOS equipment is shown for conduit routing only. For typical details of TOS controller and devices, see sheets E-344 through E-357.
   - For types of pull boxes, splice boxes and enclosures, see sheet E-169.
   - For bridge grounding plan, see sheet E-196.
   - For circuit and conduit/cable tray schedules, see sheets starting at E-401.
2. For other work related to items not shown on this sheet, see Electrical Special Provisions.
3. The girder lighting fixtures are shown diagrammatically. Contractor shall install fixtures at railing posts with a maximum of 8000 mm between fixtures. For types and typical lighting fixture installation details, see sheet E-206.
4. The cable trays are shown diagrammatically. For typical girder cable tray plans and sections, see sheets E-207 and E-208.
5. For Section B-B, see sheet E-264A.

SAS SUPERSTRUCTURE - CONDUIT AND CABLE TRAY PLAN

REGISTERED PROFESSIONAL ENGINEER S. A. ESTOQUE, JR. No. E-10151 Exp. 12/31/2008 ELECTRICAL STATE OF CALIFORNIA

FOR REVISION ONLY

REQUEST FOR INFORMATION NOT ADDRESSED IN THIS CCO REMAIN IN FORCE

MARK	DATE	DESCRIPTIONS	BY	CH'D	CCO#
1	02/25/08	CABLE TRAY CHANGES	MP	RG SE	42S1

REVISIONS

CONTRACT CHANGE ORDER NO. _____
SHEET _____ OF _____

THIS PLAN IS ACCURATE FOR ELECTRICAL WORK ONLY.

SAS SUPERSTRUCTURE GIRDER EASTBOUND
LIGHTING AND ELECTRICAL SYSTEMS

SCALE 1:200

E-182

STATE OF CALIFORNIA - DEPARTMENT OF TRANSPORTATION
Caltrans

DESIGN OVERSIGHT
BEHZAD GOLEMOHAMMADI

CALCULATED/ DESIGNED BY	DATE 08/02	REVISED BY
CHECKED BY	CYF 08/02	DATE REVISED

LAST REVISION 00-00-00

DATE PLOTTED => 7/11/2008
TIME PLOTTED => 12:54:02 PM

FOR REDUCED PLANS ORIGINAL SCALE IS IN MILLIMETERS 0 20 40 60 80

DGN FILE =>T:\13103\MS\pse\SAS Struc\CCO\SAS CCO42S1\CCO 42S1 Final Submittal 2008-07-11\04-0120f1_0216R01.dgn
USERNAME =>llorico

CU 04251 | EA 0120F1

DIST	COUNTY	ROUTE	KILOMETER POST TOTAL PROJECT	SHEET No	TOTAL SHEETS
04	SF	80	13.2/13.9	220 R1	1204

REGISTERED ELECTRICAL ENGINEER 12/19/02 DATE

12-6-04
PLANS APPROVAL DATE

REGISTERED PROFESSIONAL ENGINEER JENS ERLINGSSON No. 8249 Exp. 9/30/06 ELECTRICAL STATE OF CALIFORNIA

PB POWER, Inc.
A Parsons Brinckerhoff Company
303 Second St., Suite 700N
San Francisco, CA 94107-1317

The State of California or its officers or agents shall not be responsible for the accuracy or completeness of electronic copies of this plan sheet.

Caltrans now has a web site! To get to the web site, go to http://www.dot.ca.gov

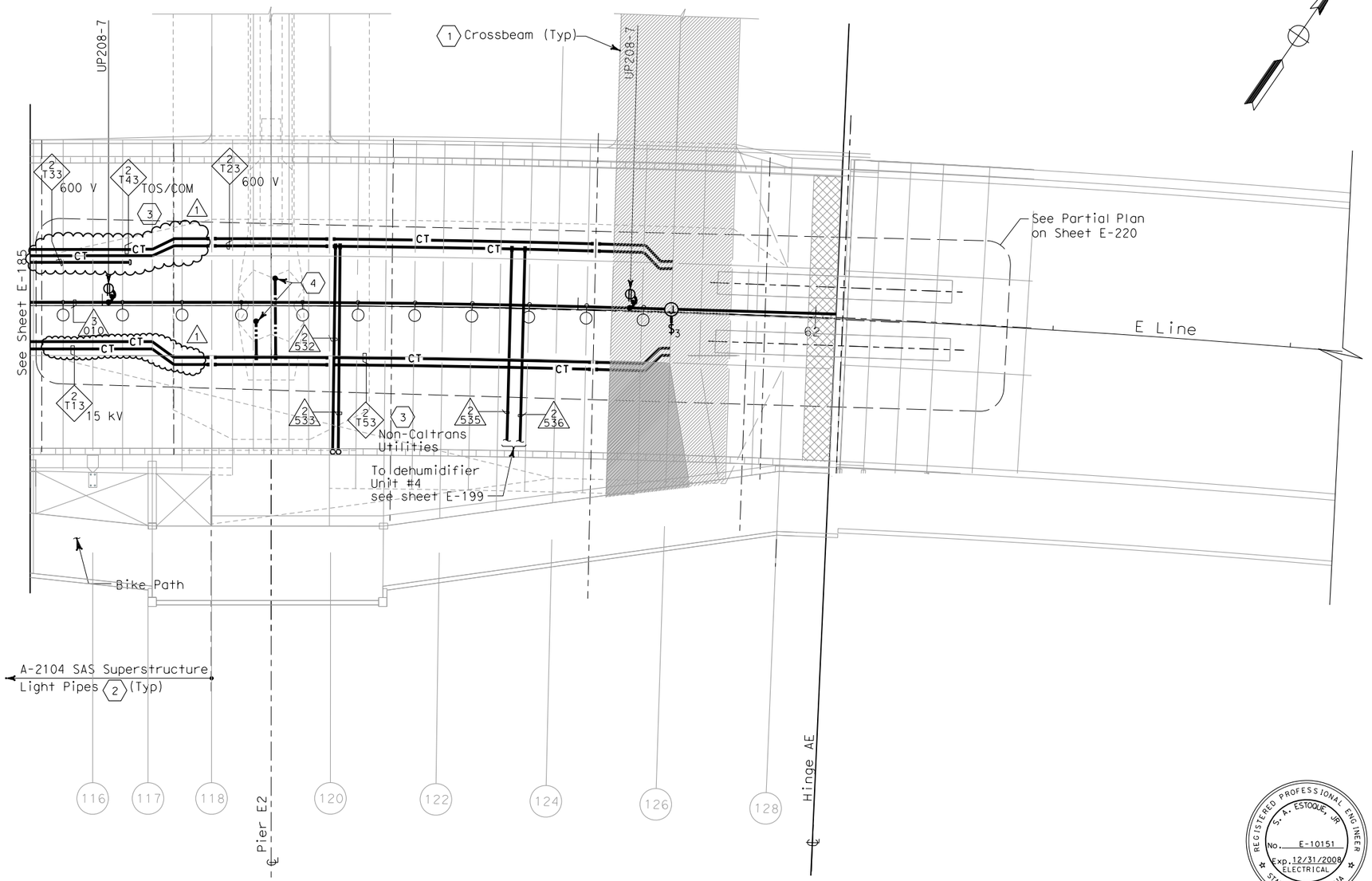

SHEET NOTES:

1. For lighting inside crossbeam, see sheet E-119.
2. For future light pipes, see sheets E-202 thru E-204. For light pipe schedule, see sheet E-217.
3. For cable tray & ground bar support, refer to sheet E-208.
4. 250 kcmil bare copper grounding conductor exothermically welded to 500 kcmil system ground conductor. See E2/T1 Structures Contract 04-0120E4. For continuation, see sheet E-196.

NOTES:

1. References:
   - TOS equipment is shown for conduit routing only. For typical details of TOS controller and devices, see sheets E-344 through E-357.
   - For types of pull boxes, splice boxes and enclosures, see sheet E-169.
   - For bridge grounding plan, see sheet E-196.
   - For circuit and conduit/cable tray schedules, see sheets starting at E-401.
2. For other work related to Hinge AE and items not shown on this sheet, see Electrical Special Provisions.
3. The girder lighting fixtures are shown diagrammatically.Contractor shall install fixtures at railing posts with a maximum of 8000 mm between fixtures. For types and typical lighting fixture installation details, see sheet E-206.
4. The cable trays are shown diagrammatically. For typical girder cable tray plans and sections, see sheets E-207 and E-208.

REGISTERED PROFESSIONAL ENGINEER S. A. ESTOQUE, JR. No. E-10151 Exp. 12/31/2008 ELECTRICAL STATE OF CALIFORNIA

FOR REVISION ONLY

REQUEST FOR INFORMATION NOT ADDRESSED IN THIS CCO REMAIN IN FORCE

MARK	DATE	DESCRIPTIONS	BY	CH'D	CCO#
1	02/25/08	CABLE TRAY CHANGES	JD	RG SE	42S1

REVISIONS

CONTRACT CHANGE ORDER NO._____
SHEET _____ OF _____

SAS SUPERSTRUCTURE - CONDUIT AND CABLE TRAY PLAN

SAS SUPERSTRUCTURE GIRDER EASTBOUND
LIGHTING AND ELECTRICAL SYSTEMS

SCALE 1:200

E-186

THIS PLAN IS ACCURATE FOR ELECTRICAL WORK ONLY.

ALL DIMENSIONS ARE IN METERS UNLESS OTHERWISE SHOWN.

STATE OF CALIFORNIA - DEPARTMENT OF TRANSPORTATION
Caltrans

DESIGN OVERSIGHT: BEHZAD GOLEMOHAMMADI

CALCULATED/DESIGNED BY: EDC — DATE 08/02 — REVISED BY
CHECKED BY: CYF — 08/02 — DATE REVISED

FOR REDUCED PLANS ORIGINAL SCALE IS IN MILLIMETERS 0 20 40 60 80

DGN FILE =>T:\13103\MS\pse\SAS Struc\CCO\SAS CC042S1\CCO 42S1 Final Submittal 2008-07-11\04-0120f1_0220R01.dgn
USERNAME =>llorico

CU 04251 EA 0120F1

LAST REVISION 00-00-00 DATE PLOTTED => 7/11/2008 TIME PLOTTED => 2:53:27 PM 7/11/2008

REQUEST FOR INFORMATION NOT ADDRESSED IN THIS CCO REMAIN IN FORCE

MARK	DATE	DESCRIPTIONS	BY	CH'D	CCO#
1	02/25/08	CABLE TRAY CHANGES	JD	RG SE	42S1

REVISIONS

CONTRACT CHANGE ORDER NO._____
SHEET _____ OF _____

REGISTERED PROFESSIONAL ENGINEER S. A. ESTOQUE, JR. No. E-10151 Exp. 12/31/2008 ELECTRICAL STATE OF CALIFORNIA

FOR REVISION ONLY

Caltrans Metric

DIST	COUNTY	ROUTE	KILOMETER POST TOTAL PROJECT	SHEET No	TOTAL SHEETS
04	SF	80	13.2/13.9	221 R1	1204

REGISTERED ELECTRICAL ENGINEER 2/6/04 DATE

12-6-04
PLANS APPROVAL DATE

REGISTERED PROFESSIONAL ENGINEER JENS ERLINGSSON No. 8249 Exp. 9/30/06 ELECTRICAL STATE OF CALIFORNIA

PB POWER, Inc.
A Parsons Brinckerhoff Company
303 Second St., Suite 700N
San Francisco, CA 94107-1317

The State of California or its officers or agents shall not be responsible for the accuracy or completeness of electronic copies of this plan sheet.

Caltrans now has a web site! To get to the web site, go to http://www.dot.ca.gov

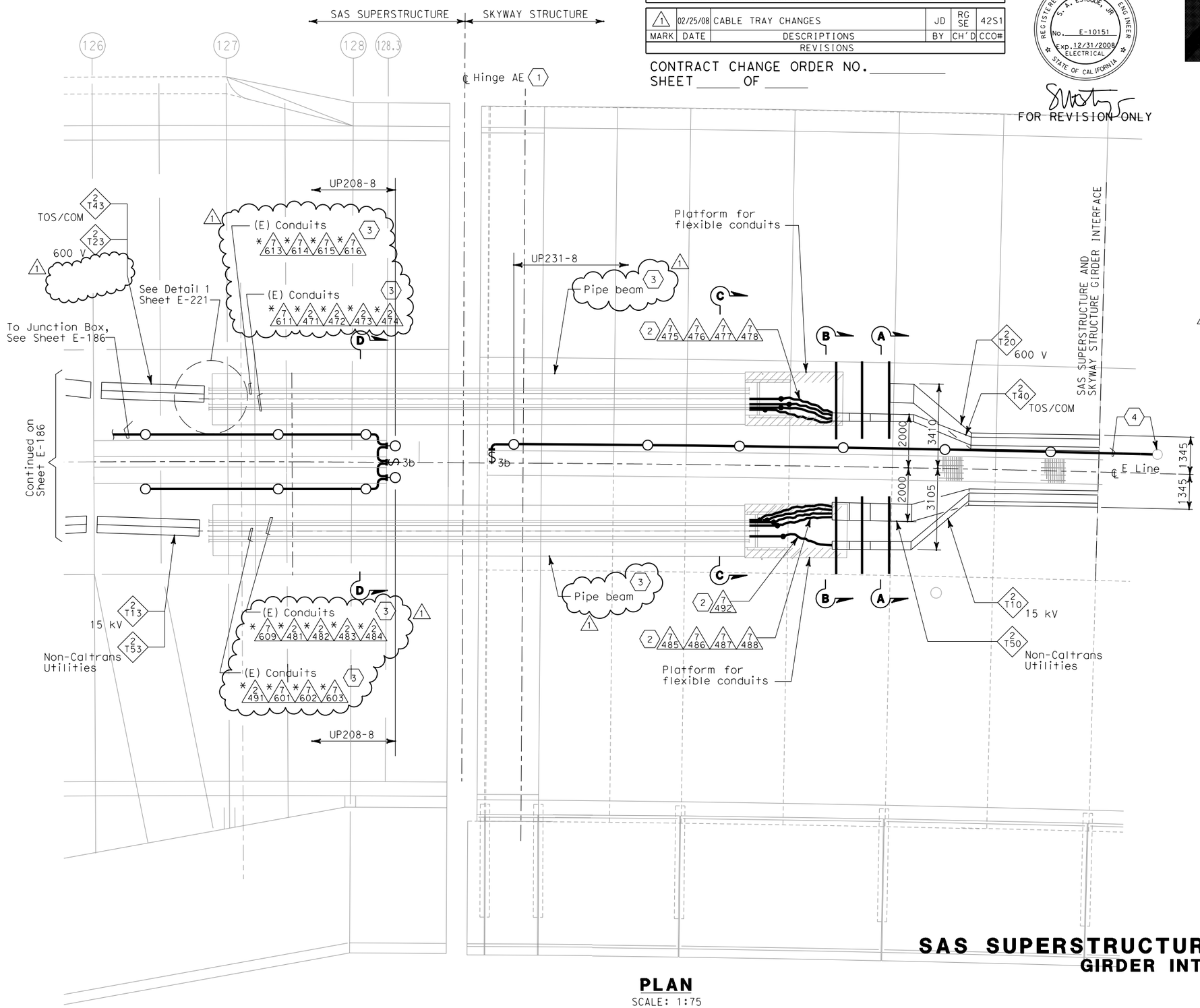

SHEET NOTES:

1. Hinge AE electrical design is based on the maximum expansion joint movement opening of 1243 mm.
2. Arrange and group the flexible 103 mm conduits to maintain a minimum voltage level separation of 460 mm between systems.
3. Existing conduits(*) inside pipe beam are supplied in Skyway contract.
4. Terminate conduit to the next lighting fixture and splice wiring to circuit UP231-8 of Skyway Structure.

NOTES:

1. Minimum radius of cable tray fittings shall be 610 mm.
2. Minimum radius of 103 mm conduits bends shall be 610 mm.
3. Cables/circuits passing through the hinge locations shall be provided with cable identification tag at both ends of Hinge.
4. For additional work related not shown on this drawing, see Electrical Special Provisions.
5. Section A-A and B-B see sheet E-221B.
6. Section C-C and Section D-D, see sheet E-221C.

PLAN
SCALE: 1:75

SAS SUPERSTRUCTURE AND SKYWAY STRUCTURE
GIRDER INTERFACE EASTBOUND
AS NOTED

E-186A

THIS PLAN ACCURATE FOR ELECTRICAL WORK ONLY.

ALL DIMENSIONS ARE IN MILLIMETERS UNLESS OTHERWISE SHOWN.

DATE	BY	REVISED BY	DATE REVISED
12/03	CYF	EJL	2/04

CALCULATED/DESIGNED BY EJL
CHECKED BY

DESIGN OVERSIGHT
BEHZAD GOLEMOHAMMADI

STATE OF CALIFORNIA - DEPARTMENT OF TRANSPORTATION
Caltrans

LAST REVISION 00-00-00
DATE PLOTTED => 7/11/2008
TIME PLOTTED => 2:54:50 PM

FOR REDUCED PLANS ORIGINAL SCALE IS IN MILLIMETERS 0 20 40 60 80

DGN FILE =>T:\13103\MS\pse\SAS Struc\CCO\SAS CCO42S1\CCO 42S1 Final Submittal 2008-07-11\04-0120f1_0221R01.dgn
USERNAME =>llorico

CU 04251 EA 0120F1

DIST	COUNTY	ROUTE	KILOMETER POST TOTAL PROJECT	SHEET No	TOTAL SHEETS
04	SF	80	13.2/13.9	230 R1	1204

Jens Erlingsson 12/19/02
REGISTERED ELECTRICAL ENGINEER DATE

12-6-04
PLANS APPROVAL DATE

REGISTERED PROFESSIONAL ENGINEER JENS ERLINGSSON No. 8249 Exp. 9/30/06 ELECTRICAL STATE OF CALIFORNIA

PB POWER, Inc.
A Parsons Brinckerhoff Company
303 Second St., Suite 700N
San Francisco, CA 94107-1317

The State of California or its officers or agents shall not be responsible for the accuracy or completeness of electronic copies of this plan sheet.

Caltrans now has a web site! To get to the web site, go to http://www.dot.ca.gov

Caltrans Metric

REGISTERED PROFESSIONAL ENGINEER S. A. ESTOQUE, JR. No. E-10151 Exp. 12/31/2008 ELECTRICAL STATE OF CALIFORNIA

FOR REVISION ONLY

REQUEST FOR INFORMATION NOT ADDRESSED IN THIS CCO REMAIN IN FORCE

MARK	DATE	DESCRIPTIONS	BY	CH'D	CCO#
1	02/25/08	CABLE TRAY CHANGES	RG	SE	42S1

REVISIONS

CONTRACT CHANGE ORDER NO. _____
SHEET _____ OF _____

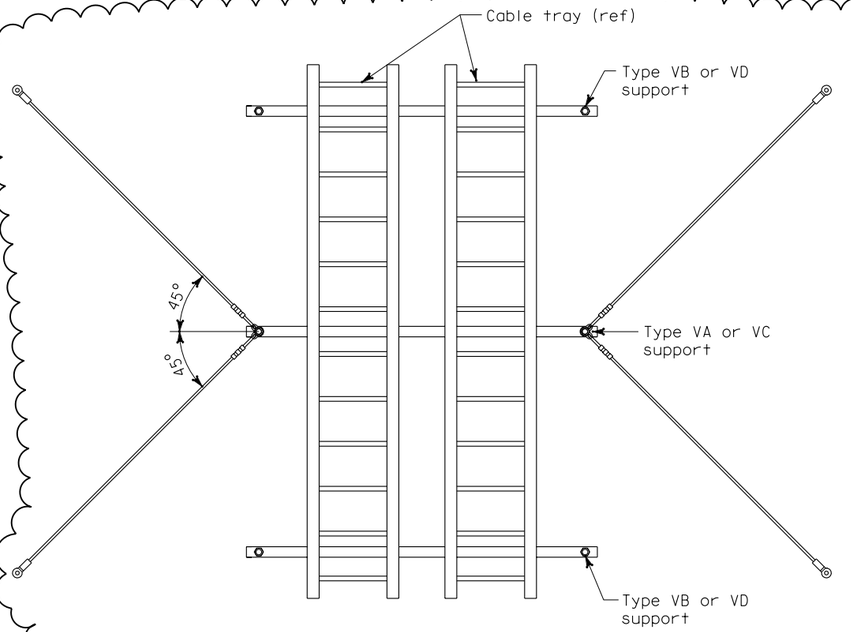

PLAN VIEW - CABLE TRAY SUPPORTS

MATERIAL LIST

Item No.	Description	Type VA thru VE
A	Deleted	
B	Deleted	
C	Threaded steel hanger rod, 13 mm diameter	X
D	Strut channel spring nut, lock washer and hex bolt	X
E	Hold down clamp Cooper B-Line #9SS6-1205 or equal	X
F	Strut hanger trapeze hardware kit	X
G	Heavy duty hold down clamp Cooper B-Line #9SS6-1241 or equal	
H	Deleted	
J	Rod hanger expansion anchor, 13 mm dia, 100 mm minimum depth embedment and allowable load (in tension) of 4.45 kN	X
K	Deleted	
L	Deleted	
M	Rod hanger seismic bracing kit (includes 4-stake eyes, 4-oval sleeves, 4-URC clips and 4-3048mm long wire cables) PW Industries part no. PW18-C26-10/C-SP-316SS or equal	X
N	Strut channel, 41 mm x 82 mm (Double)	X
P	Expansion/sleeve anchors 13 mm dia x 76 mm long hex type	X
Q	Flat washer 13 mm dia bolt size	X
R	Deleted	
S	Threaded rod (13 mm) with stiffener & stiffener clips	X
T	Rod coupler, hex nut and washer for expansion anchor	X
U	Deleted	
V	Deleted	
W	Deleted	

NOTES:

- For typical cable tray attachment details, see E-205A.

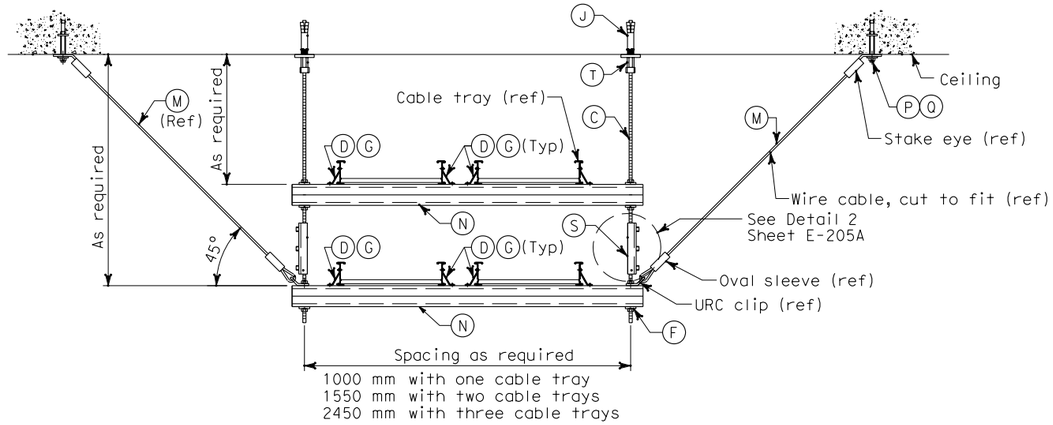

TYPE VC CABLE TRAY SUPPORT ELEVATION

TYPE VD CABLE TRAY SUPPORT ELEVATION WITHOUT (ITEM M) SEISMIC BRACING KIT

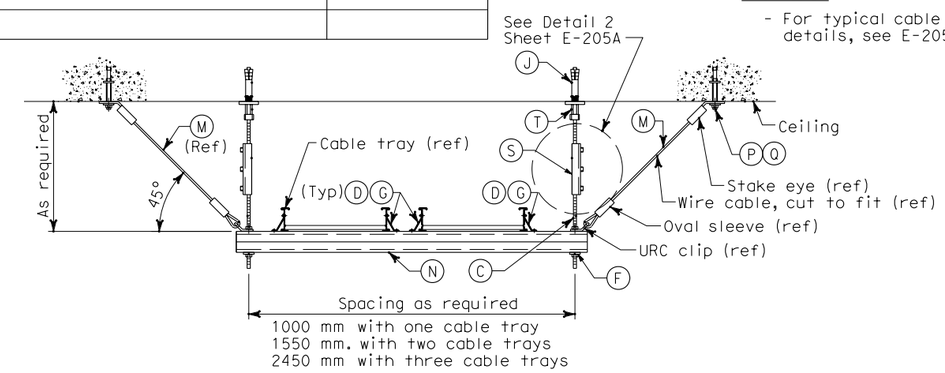

TYPE VA CABLE TRAY SUPPORT ELEVATION

TYPE VB CABLE TRAY SUPPORT ELEVATION WITHOUT (ITEM M) SEISMIC BRACING KIT

DETAILS
SAS SUPERSTRUCTURE GIRDER EASTBOUND TYPICAL TRAY SUPPORTS
NO SCALE

E-205

THIS PLAN ACCURATE FOR ELECTRICAL WORK ONLY.

ALL DIMENSIONS ARE IN MILLIMETERS UNLESS OTHERWISE SHOWN

FOR REDUCED PLANS ORIGINAL SCALE IS IN MILLIMETERS 0 20 40 60 80

DGN FILE =>T:\13103\MS\pse\SAS Struc\CCO\SAS CCO42S1\CCO 42S1 Final Submittal 2008-07-11\04-0120f1_0230R01.dgn
USERNAME =>llorico

CU 04251 | EA 0120F1

LAST REVISION 00-00-00 | DATE PLOTTED => 7/11/2008 TIME PLOTTED => 2:55:09 PM

CALCULATED/ DESIGNED BY	RG	DATE 08/02	REVISED BY
CHECKED BY	ES	08/02	DATE REVISED

DESIGN OVERSIGHT
BEHZAD GOLEMOHAMMADI

STATE OF CALIFORNIA - DEPARTMENT OF TRANSPORTATION
Caltrans

FILE: T:\03\ms\pse\electrical\con\7x03es1680.dgn
DATE: 3-10-03 16:36

DIST	COUNTY	ROUTE	KILOMETER POST TOTAL PROJECT	SHEET No	TOTAL SHEETS
04	SF	80	13.2/13.9	230 S1	1204

REGISTERED ELECTRICAL ENGINEER 2/22/08 DATE

PLANS APPROVAL DATE

REGISTERED PROFESSIONAL ENGINEER S. A. ESTOQUE, JR. No. E-10151 Exp. 12/31/2008 ELECTRICAL STATE OF CALIFORNIA

PB AMERICAS, Inc.
A Parsons Brinckerhoff Company
303 Second St., Suite 700N
San Francisco, CA 94107-1317

The State of California or its officers or agents shall not be responsible for the accuracy or completeness of electronic copies of this plan sheet.

Caltrans now has a web site! To get to the web site, go to http://www.dot.ca.gov

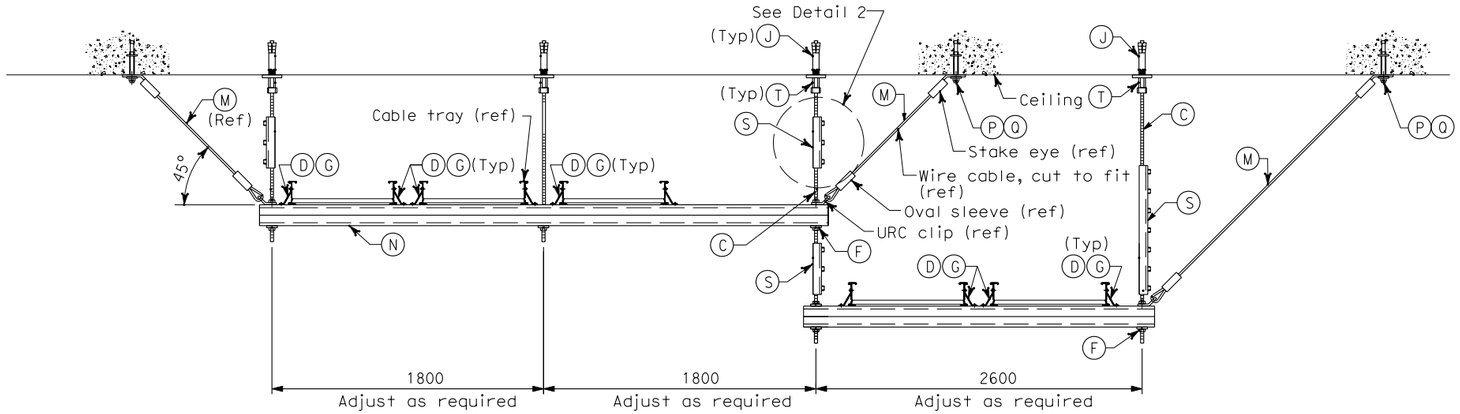

TYPE VE CABLE TRAY SUPPORT ELEVATION

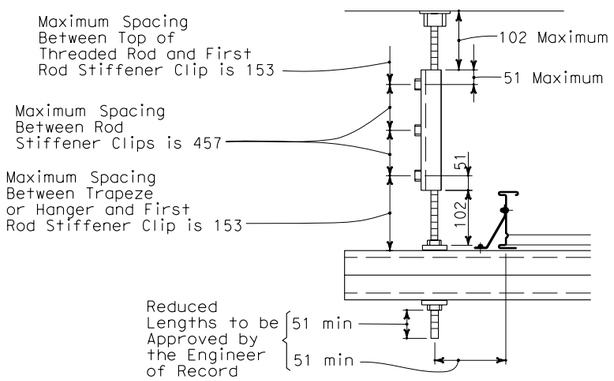

DETAIL 2

REQUEST FOR INFORMATION NOT ADDRESSED IN THIS CCO REMAIN IN FORCE					
0	02/25/08	CABLE TRAY CHANGES	RG	SE	42S1
MARK	DATE	DESCRIPTIONS	BY	CH'D	CCO#
REVISIONS					

CONTRACT CHANGE ORDER NO._____
SHEET _____ OF _____

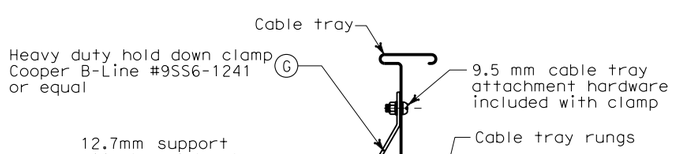

TYPE I

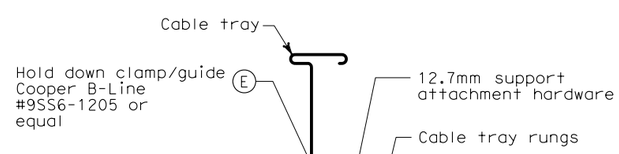

TYPE II
(OPTIONAL)

TYPICAL CABLE TRAY ATTACHMENT

MATERIAL LIST

Item No.	Description	Type VA thru VE
(A)	Deleted	
(B)	Deleted	
(C)	Threaded steel hanger rod, 13 mm diameter	X
(D)	Strut channel spring nut, lock washer and hex bolt	X
(E)	Hold down clamp Cooper B-Line #9SS6-1205 or equal	X
(F)	Strut hanger trapeze hardware kit	X
(G)	Heavy duty hold down clamp Cooper B-Line #9SS6-1241 or equal	X
(H)	Deleted	
(J)	Rod hanger expansion anchor, 13 mm dia, 100 mm minimum depth embedment and allowable load (in tension) of 4.45 kN	X
(K)	Deleted	
(L)	Deleted	
(M)	Rod hanger seismic bracing kit (includes 4-stake eyes, 4-oval sleeves, 4-URC clips and 4-3048mm long wire cables) PW Industries part no. PW18-C26-10/C-SP-316SS or equal	X
(N)	Strut channel, 41 mm x 82 mm (Double)	X
(P)	Expansion/sleeve anchors 13 mm dia x 76 mm long hex type	X
(Q)	Flat washer 13 mm dia bolt size	X
(R)	Deleted	
(S)	Threaded rod (13 mm) with stiffener & stiffener clips	X
(T)	Rod coupler, hex nut and washer for expansion anchor	X
(U)	Deleted	
(V)	Deleted	
(W)	Deleted	

DETAILS
SAS SUPERSTRUCTURE GIRDER EASTBOUND
TYPICAL TRAY SUPPORTS
NO SCALE

E-205A

CALCULATED/ DESIGNED BY	RG	DATE 07/07	REVISED BY
CHECKED BY	ES	07/07	DATE REVISED

DESIGN OVERSIGHT
BEHZAD GOLEMOHAMMADI

STATE OF CALIFORNIA - DEPARTMENT OF TRANSPORTATION
Caltrans

LAST REVISION 00-00-00
DATE PLOTTED => 7/11/2008
TIME PLOTTED => 2:55:27 PM

THIS PLAN ACCURATE FOR ELECTRICAL WORK ONLY.

ALL DIMENSIONS ARE IN MILLIMETERS UNLESS OTHERWISE SHOWN

FOR REDUCED PLANS ORIGINAL SCALE IS IN MILLIMETERS 0 20 40 60 80

DGN FILE =>T:\13103\MS\pse\SAS Struc\CCO\SAS CCO42S1\CCO 42S1 Final Submittal 2008-07-11\04-0120f1_0230S01.dgn
USERNAME =>llorico

CU 04251 EA 0120F1

DIST	COUNTY	ROUTE	KILOMETER POST TOTAL PROJECT	SHEET No	TOTAL SHEETS
04	SF	80	13.2/13.9	231 R1	1204

Jens Erlingsson 12/19/02
REGISTERED ELECTRICAL ENGINEER DATE

12-6-04
PLANS APPROVAL DATE

REGISTERED PROFESSIONAL ENGINEER JENS ERLINGSSON No. 8249 Exp. 9/30/06 ELECTRICAL STATE OF CALIFORNIA

PB POWER, Inc.
A Parsons Brinckerhoff Company
303 Second St., Suite 700N
San Francisco, CA 94107-1317

The State of California or its officers or agents shall not be responsible for the accuracy or completeness of electronic copies of this plan sheet.

Caltrans now has a web site! To get to the web site, go to http://www.dot.ca.gov

Caltrans Metric

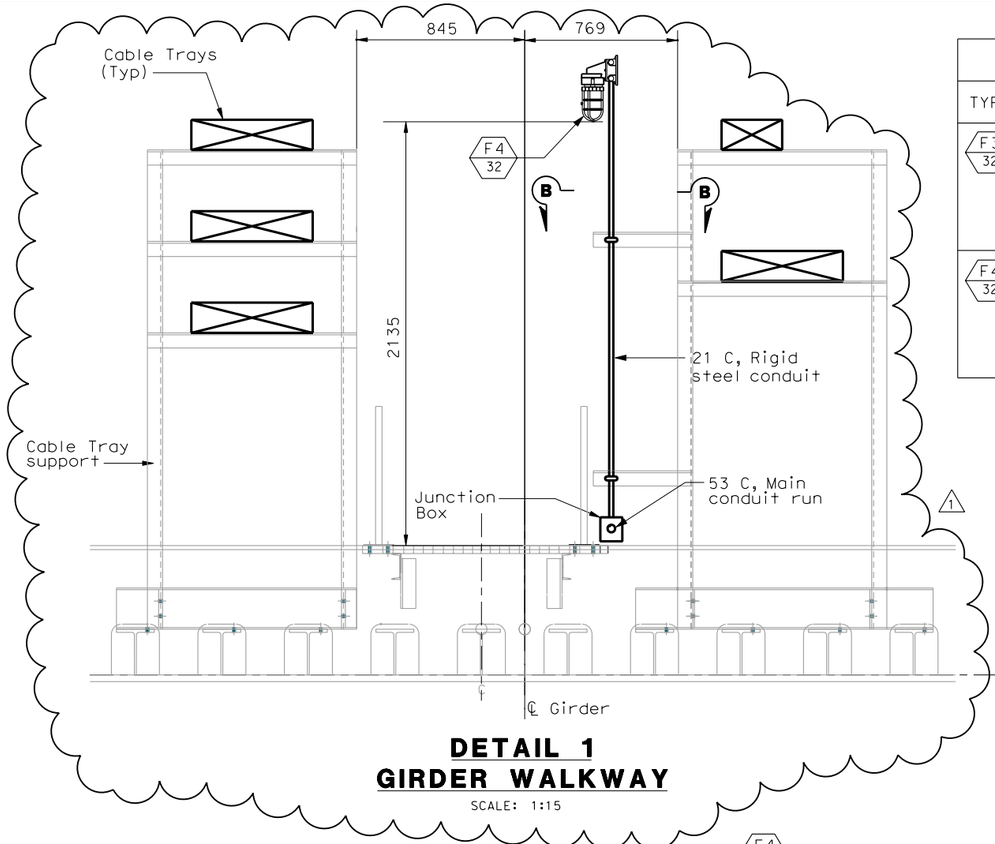

DETAIL 1
GIRDER WALKWAY
SCALE: 1:15

LIGHTING FIXTURE SCHEDULE			
TYPE	INPUT VOLT-AMP	DESCRIPTION	REMARKS
F3 32	41	Compact fluorescent fixture, non metallic vaportight housing with guard and clear glass globe, U.L. listed for wet and marine environment, 120 VAC, high frequency ballast and (1) 32 watt CFM32/GX24Q lamp. Suitable for wall mounting.	
F4 32	41	Compact fluorescent fixture, non metallic vaportight housing with guard and clear glass globe, U.L. listed for wet and marine environment, 120 VAC, high frequency ballast and (1) 32 watt CFM32/GX24Q lamp. Suitable for stanchion mounting.	

NOTES:

1. Fittings and mounting hardware shall be stainless steel. For additional requirements, see Electrical Special Provisions.
2. For stanchion mounted light support detail on cable tray support structure, see sheet AS-11. 1

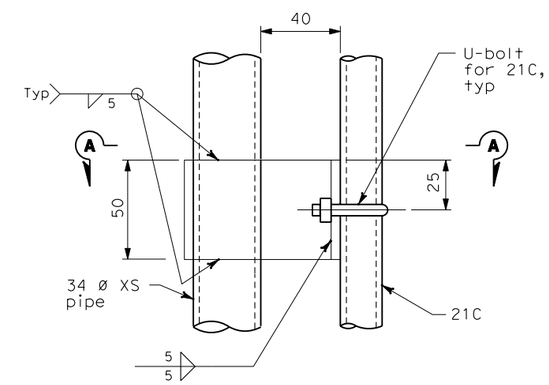

DETAIL 4
NO SCALE

REQUEST FOR INFORMATION NOT ADDRESSED IN THIS CCO REMAIN IN FORCE

MARK	DATE	DESCRIPTIONS	BY	CH'D	CCO#
1	02/25/08	CABLE TRAY CHANGES	TW	RG SE	42S1

REVISIONS

CONTRACT CHANGE ORDER NO._____
SHEET _____ OF _____

REGISTERED PROFESSIONAL ENGINEER S. A. ESTOQUE, JR No. E-10151 Exp. 12/31/2008 ELECTRICAL STATE OF CALIFORNIA

FOR REVISION ONLY

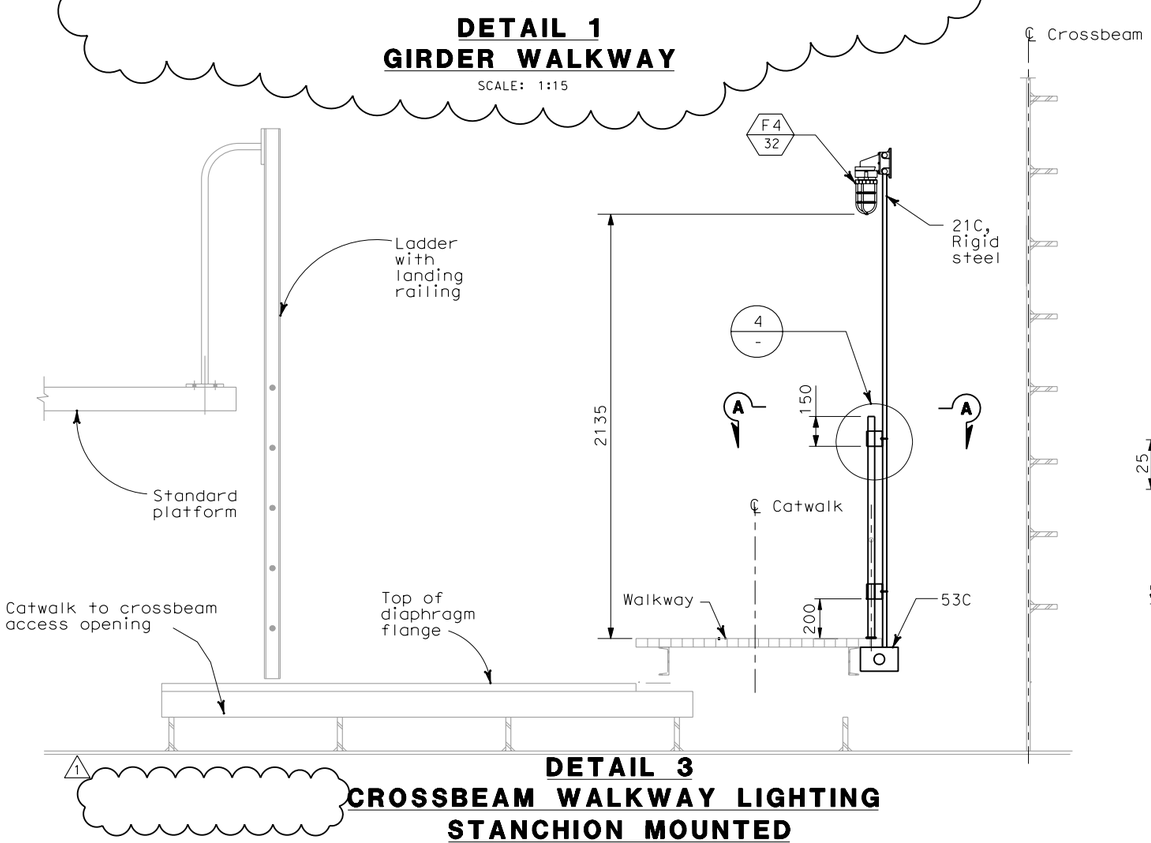

DETAIL 3
CROSSBEAM WALKWAY LIGHTING STANCHION MOUNTED
SCALE: 1:15

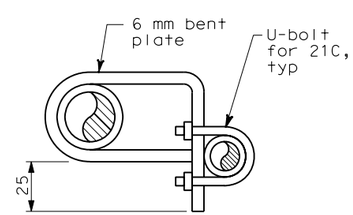

SECTION A-A
NO SCALE

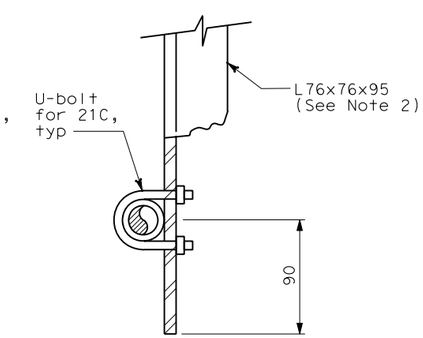

SECTION B-B
NO SCALE

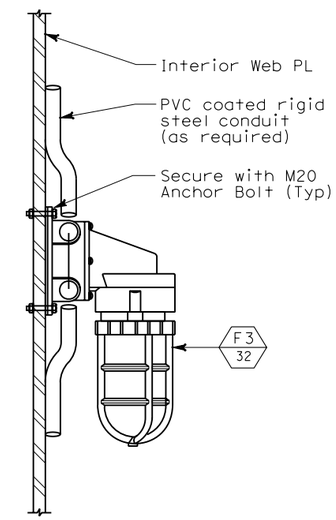

DETAIL 2
ACCESS LIGHTING WALL MOUNTED
NO SCALE

DETAILS
SAS SUPERSTRUCTURE GIRDER EASTBOUND TYPICAL LIGHTING INSTALLATION
SCALE AS NOTED

E-206

THIS PLAN ACCURATE FOR ELECTRICAL WORK ONLY.

ALL DIMENSIONS ARE IN MILLIMETERS UNLESS OTHERWISE SHOWN

FOR REDUCED PLANS ORIGINAL SCALE IS IN MILLIMETERS 0 20 40 60 80

DGN FILE =>T:\13103\MS\pse\SAS Struc\CCO\SAS CC042S1\CCO 42S1 Final Submittal 2008-07-11\04-0120f1_0231R01.dgn
USERNAME =>llorico
CU 04251
EA 0120F1

STATE OF CALIFORNIA - DEPARTMENT OF TRANSPORTATION
Caltrans

DESIGN OVERSIGHT: BEHZAD GOLEMOHAMMADI

CALCULATED/DESIGNED BY: FK DATE 08/02 REVISED BY
CHECKED BY: IAH 08/02 DATE REVISED

LAST REVISION 00-00-00
DATE PLOTTED => 7/11/2008
TIME PLOTTED => 2:55:49 PM

DIST	COUNTY	ROUTE	KILOMETER POST TOTAL PROJECT	SHEET No	TOTAL SHEETS
04	SF	80	13.2/13.9	232 R1	1204

Caltrans Metric

REGISTERED ELECTRICAL ENGINEER 11/27/02 DATE

REGISTERED PROFESSIONAL ENGINEER JENS ERLINGSSON No. 8249 Exp. 9/30/06 ELECTRICAL STATE OF CALIFORNIA

PLANS APPROVAL DATE

PB POWER, Inc.
A Parsons Brinckerhoff Company
303 Second St., Suite 700N
San Francisco, CA 94107-1317

The State of California or its officers or agents shall not be responsible for the accuracy or completeness of electronic copies of this plan sheet.

Caltrans now has a web site! To get to the web site, go to http://www.dot.ca.gov

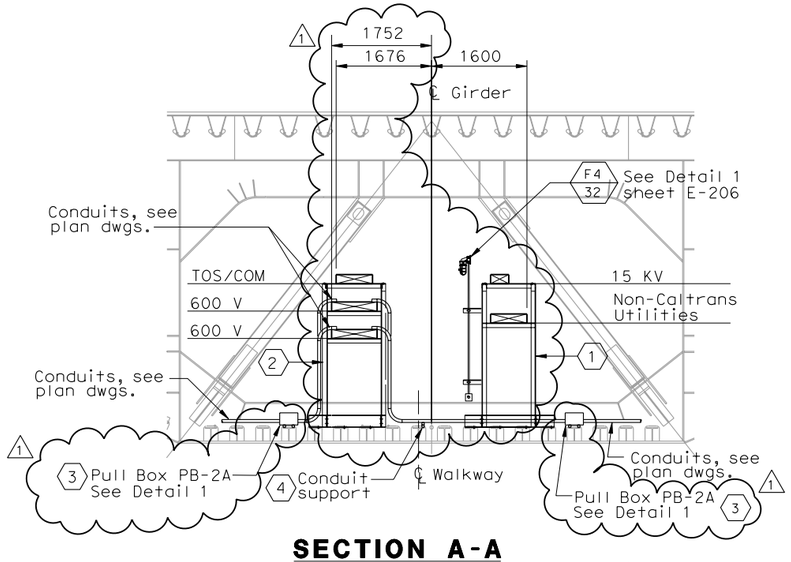

SECTION A-A
(Typical Cable Tray Support and Pull Box location)
Scale 1:15
(E-181, E-207A, E-207B)

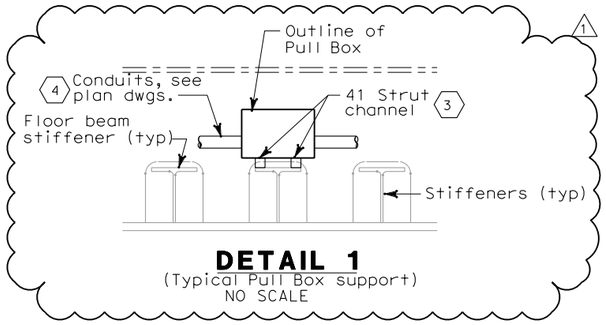

DETAIL 1
(Typical Pull Box support)
NO SCALE

REGISTERED PROFESSIONAL ENGINEER S. A. ESTOQUE, JR. No. E-10151 Exp. 12/31/2008 ELECTRICAL STATE OF CALIFORNIA

FOR REVISION ONLY

REQUEST FOR INFORMATION NOT ADDRESSED IN THIS CCO REMAIN IN FORCE

MARK	DATE	DESCRIPTIONS	BY	CH'D	CCO#
1	02/25/08	CABLE TRAY CHANGES	TW	RG SE	42S1

REVISIONS

CONTRACT CHANGE ORDER NO._____
SHEET _____ OF _____

SHEET NOTES:

1. Type I, for cable tray supports details, see AS sheets.
2. Type II, for cable tray supports details, see AS sheets.
3. Pull Box PB-2A shall be located on top of stiffener. The Contractor shall provide strut channel for support installed in field.
4. The Contractor shall provide strut channel on top of stiffener for conduit support and installed in field.

DETAILS
SAS SUPERSTRUCTURE GIRDER EASTBOUND
TYPICAL TRAY AND CONDUIT INSTALLATION
SCALE AS NOTED

3 REVISED PER ADDENDUM NO. 3 DATED NOVEMBER 7, 2005

E-207

DESIGN OVERSIGHT: BEHZAD GOLEMOHAMMADI
CALCULATED/DESIGNED BY
CHECKED BY
REVISED BY
DATE REVISED
DATE

STATE OF CALIFORNIA - DEPARTMENT OF TRANSPORTATION
Caltrans

THIS PLAN ACCURATE FOR ELECTRICAL WORK ONLY.

ALL DIMENSIONS ARE IN MILLIMETERS UNLESS OTHERWISE SHOWN.

FOR REDUCED PLANS ORIGINAL SCALE IS IN MILLIMETERS 0 20 40 60 80

DGN FILE =>T:\13103\MS\pse\SAS Struc\CCO\SAS CCO42S1\CCO 42S1 Final Submittal 2008-07-11\04-0120f1_0232R01.dgn
USERNAME =>llorico

CU 04251 | EA 0120F1

LAST REVISION 00-00-00 | DATE PLOTTED => 7/11/2008 TIME PLOTTED => 2:56:08 PM

DIST	COUNTY	ROUTE	KILOMETER POST TOTAL PROJECT	SHEET No	TOTAL SHEETS
04	SF	80	13.2/13.9	232 S1	1204

REGISTERED ELECTRICAL ENGINEER — DATE 2/22/08

PLANS APPROVAL DATE

REGISTERED PROFESSIONAL ENGINEER S. A. ESTOQUE, JR. NO. E-10151 Exp. 12/31/2008 ELECTRICAL STATE OF CALIFORNIA

PB AMERICAS, Inc.
A Parsons Brinckerhoff Company
303 Second St., Suite 700N
San Francisco, CA 94107-1317

The State of California or its officers or agents shall not be responsible for the accuracy or completeness of electronic copies of this plan sheet.

Caltrans now has a web site! To get to the web site, go to http://www.dot.ca.gov

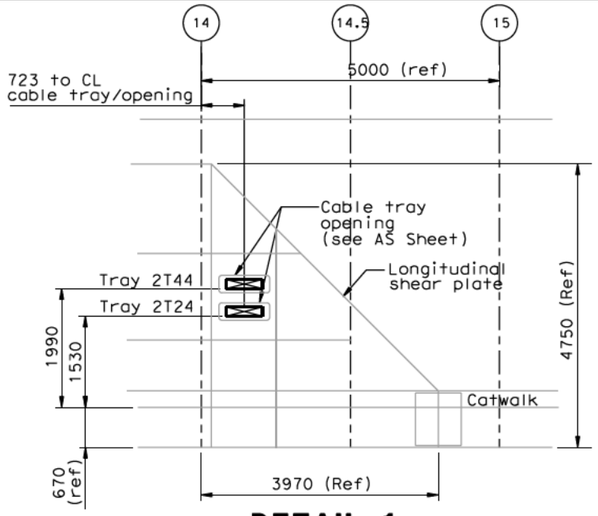

DETAIL 1

Cable pentration thru longitudinal shear plate
Scale 1:50

REQUEST FOR INFORMATION NOT ADDRESSED IN THIS CCO REMAIN IN FORCE					
0	02/25/08	CABLE TRAY CHANGES	TW	RG SE	42S1
MARK	DATE	DESCRIPTIONS	BY	CH'D	CCO#
REVISIONS					

CONTRACT CHANGE ORDER NO._____
SHEET_____ OF _____

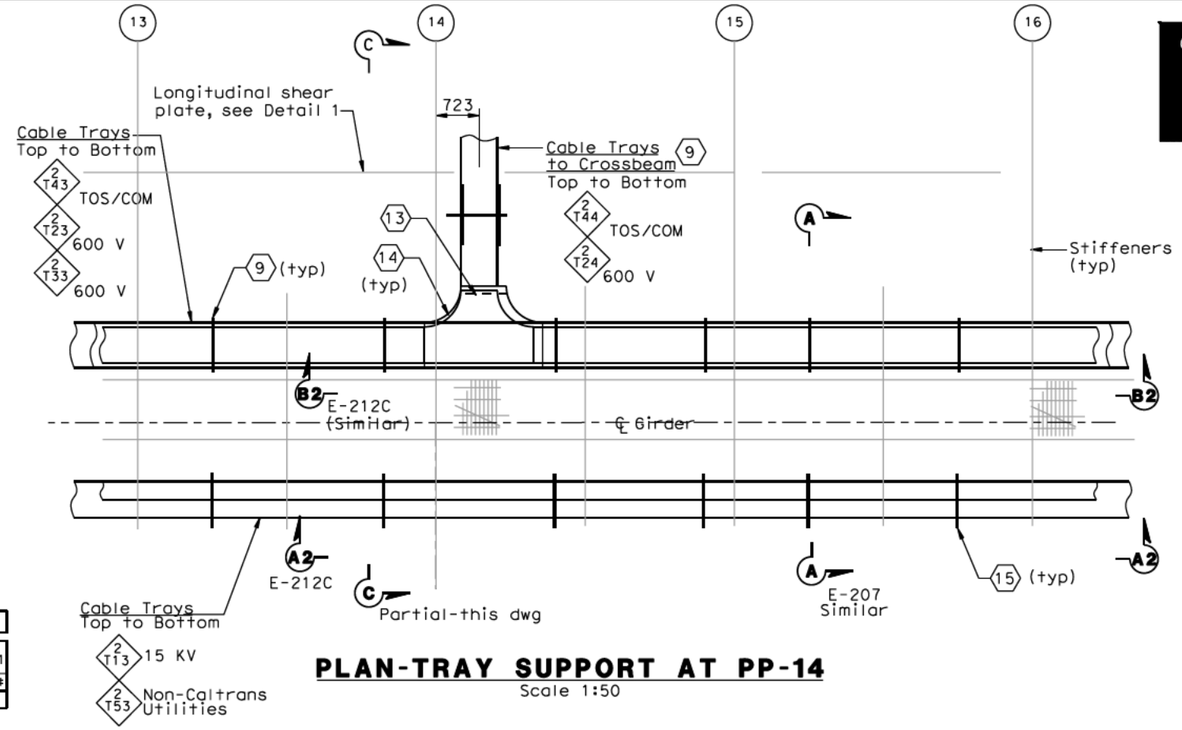

PLAN-TRAY SUPPORT AT PP-14

Scale 1:50

SHEET NOTES:

1. Type I, for cable tray supports details, see AS sheets.
2. Type II, for cable tray supports details, see AS sheets.
3. Type V, for cable tray supports details, see AS sheets.
4. Type VI, for cable tray supports details, see AS sheets.
5. Type VII, for cable tray supports details, see AS sheets.
6. Type VIIA, for cable tray supports details, see AS sheets.
7. Type VIIB, for cable tray supports details, see AS sheets.
8. The Contractor to provide cable tray support at each ends of cable tray fitting as required.
9. For cable tray support see AS-Sheets.
10. Pull Box PB-2A shall be located on top of stiffener. The Contractor shall provide strut channel for support installed in field.
11. The Contractor shall provide strut channel on top of stiffener for conduit support and installed in field.
12. The Contractor to provide insulated grounding bushing at each end of the conduit.
13. The Contractor to provide secondary support installed in field, see detail 2 on dwg E-207D.
14. Cable tray tee fitting shall have 305 mm radius.
15. The Contractor to provide sealant after cables are pulled. Conduits without cables shall have threaded cap at both ends.

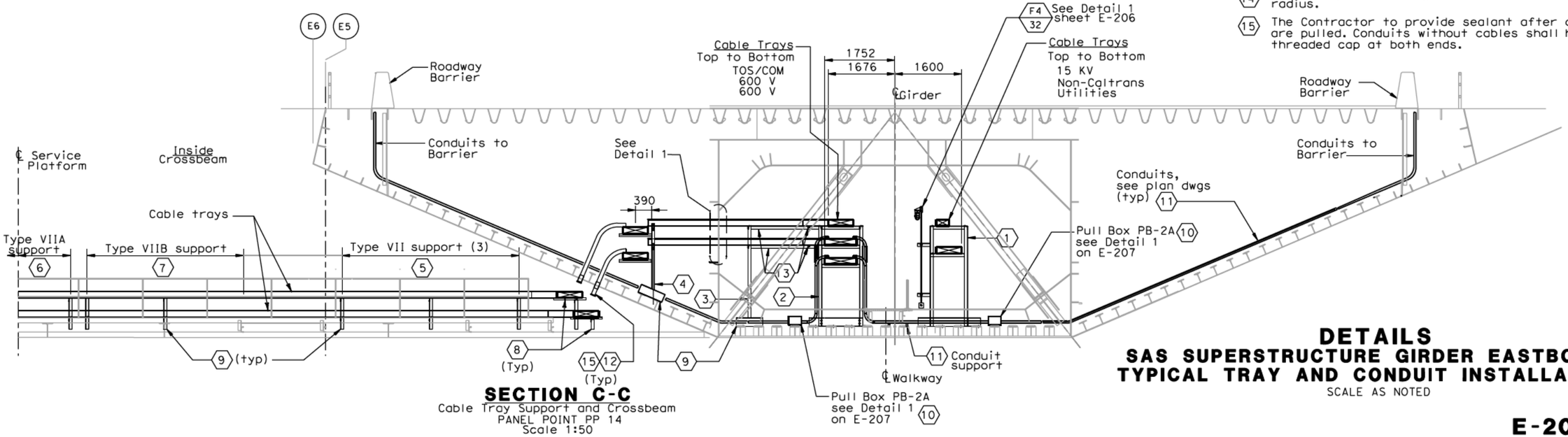

SECTION C-C

Cable Tray Support and Crossbeam
PANEL POINT PP 14
Scale 1:50

DETAILS
SAS SUPERSTRUCTURE GIRDER EASTBOUND TYPICAL TRAY AND CONDUIT INSTALLATION

SCALE AS NOTED

E-207A

THIS PLAN ACCURATE FOR ELECTRICAL WORK ONLY.

ALL DIMENSIONS ARE IN MILLIMETERS UNLESS OTHERWISE SHOWN.

FOR REDUCED PLANS ORIGINAL SCALE IS IN MILLIMETERS 0 20 40 60 80

DGN FILE =>T:\13103\MS\pse\SAS Struc\CCO\SAS CCO42S1\CCO 42S1 Final Submittal 2008-07-11\04-0120f1_0232S01.dgn
USERNAME =>llorico

CU 04251 | EA 0120F1

DATE PLOTTED => 7/11/2008
TIME PLOTTED => 2:56:42 PM

LAST REVISION 00-00-00

DESIGN OVERSIGHT: BEHZAD GOLEMOHAMMADI

CALCULATED/DESIGNED BY | CHECKED BY | REVISED BY | DATE REVISED

STATE OF CALIFORNIA - DEPARTMENT OF TRANSPORTATION
Caltrans

DIST	COUNTY	ROUTE	KILOMETER POST TOTAL PROJECT	SHEET No	TOTAL SHEETS
04	SF	80	13.2/13.9	232 S2	1204

REGISTERED ELECTRICAL ENGINEER — DATE 2/22/08

PLANS APPROVAL DATE

REGISTERED PROFESSIONAL ENGINEER S. A. ESTOQUE, JR. NO. E-10151 EXP. 12/31/2008 ELECTRICAL STATE OF CALIFORNIA

PB AMERICAS, Inc.
A Parsons Brinckerhoff Company
303 Second St., Suite 700N
San Francisco, CA 94107-1317

The State of California or its officers or agents shall not be responsible for the accuracy or completeness of electronic copies of this plan sheet.

Caltrans now has a web site! To get to the web site, go to http://www.dot.ca.gov

Caltrans Metric

REQUEST FOR INFORMATION NOT ADDRESSED IN THIS CCO REMAIN IN FORCE

MARK	DATE	DESCRIPTIONS	BY	CH'D	CCO#
0	02/25/08	CABLE TRAY CHANGES	TW	RG SE	42S1

REVISIONS

CONTRACT CHANGE ORDER NO._____
SHEET _____ OF _____

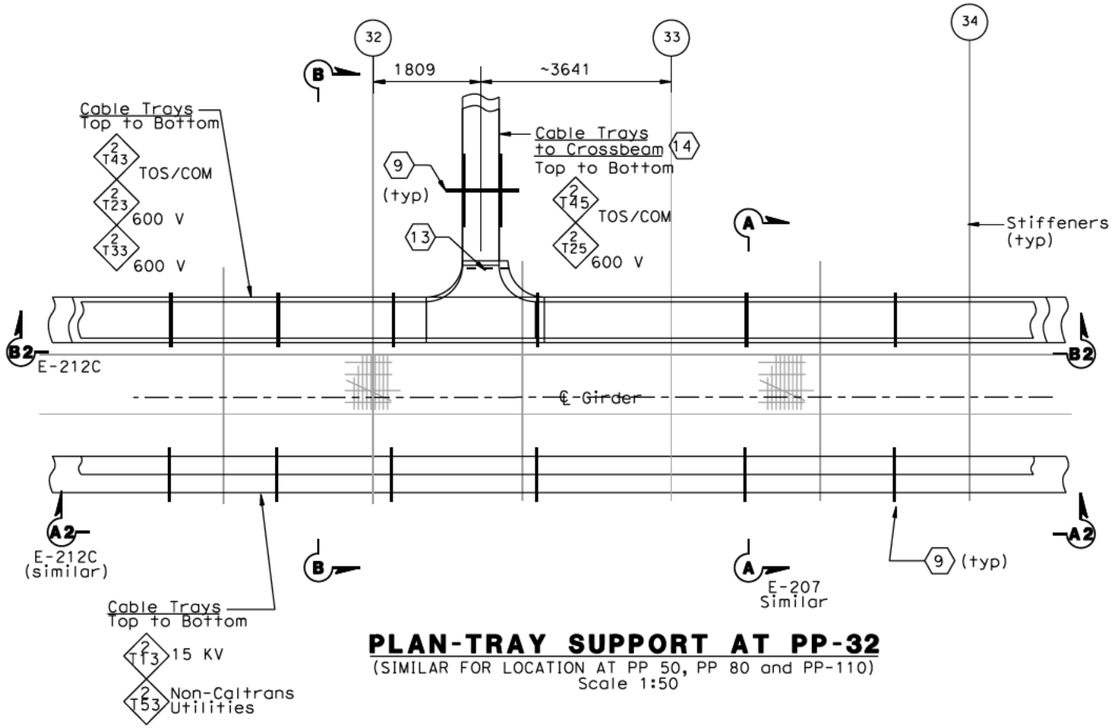

PLAN-TRAY SUPPORT AT PP-32

(SIMILAR FOR LOCATION AT PP 50, PP 80 and PP-110)
Scale 1:50

SHEET NOTES:

1. Type I, for cable tray supports details, see AS sheets.
2. Type II, for cable tray supports details, see AS sheets.
3. Type V, for cable tray supports details, see AS sheets.
4. Type VI, for cable tray supports details, see AS sheets.
5. Type VII, for cable tray supports details, see AS sheets.
6. Type VIIA, for cable tray supports details, see AS sheets.
7. Type VIIB, for cable tray supports details, see AS sheets.
8. The Contractor to provide cable tray support at each ends of cable tray fitting as required.
9. For cable tray support see AS-Sheets.
10. Pull Box PB-2A shall be located on top of stiffener. The Contractor shall provide strut channel for support installed in field.
11. The Contractor shall provide strut channel on top of stiffener for conduit support and installed in field.
12. The Contractor to provide insulated grounding bushing at each end of the conduit.
13. The Contractor to provide secondary support installed in field, see Detail 3 on dwg. E-207D.
14. For cable tray numbers to PP 50, PP 80 and PP 110, see sheet E-114B.
15. The Contractor to provide sealant after cables are pulled. Conduits without cables shall have threaded cap at both ends.

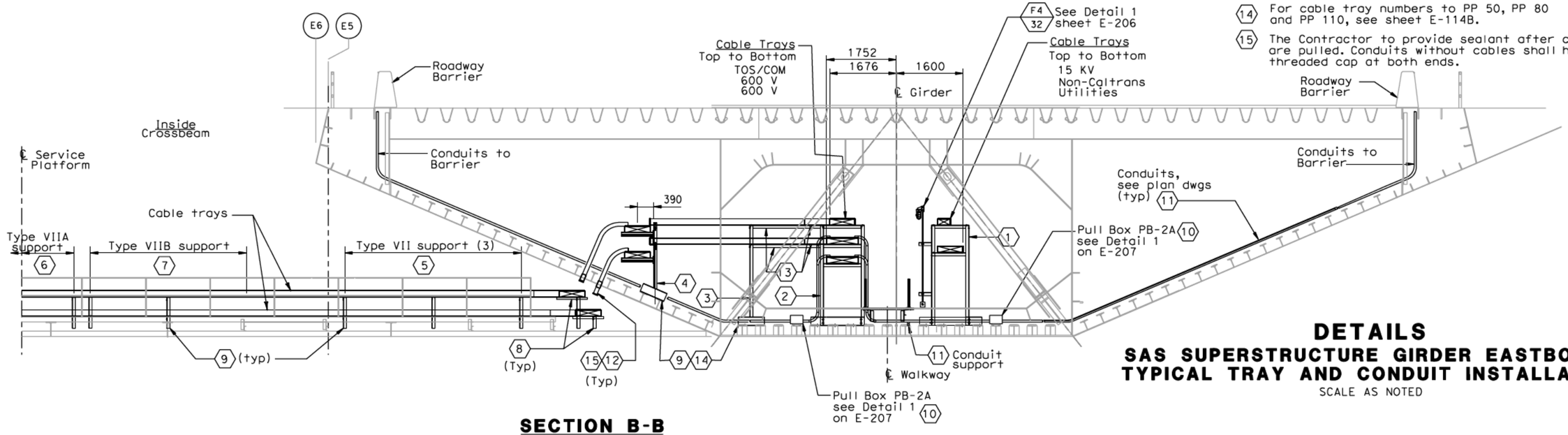

SECTION B-B

(Typical Cable Tray Support and Crossbeam)
PP 32, PP 50, PP 80 and PP-110
Scale 1:50

DETAILS

SAS SUPERSTRUCTURE GIRDER EASTBOUND TYPICAL TRAY AND CONDUIT INSTALLATION

SCALE AS NOTED

THIS PLAN ACCURATE FOR ELECTRICAL WORK ONLY.

ALL DIMENSIONS ARE IN MILLIMETERS UNLESS OTHERWISE SHOWN.

E-207B

STATE OF CALIFORNIA - DEPARTMENT OF TRANSPORTATION
Caltrans

DESIGN OVERSIGHT
BEHZAD GOLEMOHAMMADI

CALCULATED/DESIGNED BY
CHECKED BY

DATE REVISED BY
DATE REVISED

LAST REVISION 00-00-00
DATE PLOTTED => 7/11/2008
TIME PLOTTED => 2:57:16 PM

FOR REDUCED PLANS ORIGINAL SCALE IS IN MILLIMETERS 0 20 40 60 80

DGN FILE =>T:\13103\MS\pse\SAS Struc\CCO\SAS CCO42S1\CCO 42S1 Final Submittal 2008-07-11\04-0120f1_0232S02.dgn
USERNAME =>llorico

CU 04251 | EA 0120F1

DIST	COUNTY	ROUTE	KILOMETER POST TOTAL PROJECT	SHEET No	TOTAL SHEETS
04	SF	80	13.2/13.9	232 S3	1204

REGISTERED ELECTRICAL ENGINEER 2/22/08 DATE

PLANS APPROVAL DATE

REGISTERED PROFESSIONAL ENGINEER S. A. ESTOQUE, JR. No. E-10151 Exp. 12/31/2008 ELECTRICAL STATE OF CALIFORNIA

PB AMERICAS, Inc.
A Parsons Brinckerhoff Company
303 Second St., Suite 700N
San Francisco, CA 94107-1317

The State of California or its officers or agents shall not be responsible for the accuracy or completeness of electronic copies of this plan sheet.

To get to the web site, go to: http://www.dot.ca.gov

MARK	DATE	DESCRIPTIONS	BY	CH'D	CCO#
0	02/25/08	CABLE TRAY CHANGES	MP	SE RG	42S1

REVISIONS

REQUEST FOR INFORMATION NOT ADDRESSED IN THIS CCO REMAIN IN FORCE

CONTRACT CHANGE ORDER NO. _____
SHEET ____ OF ____

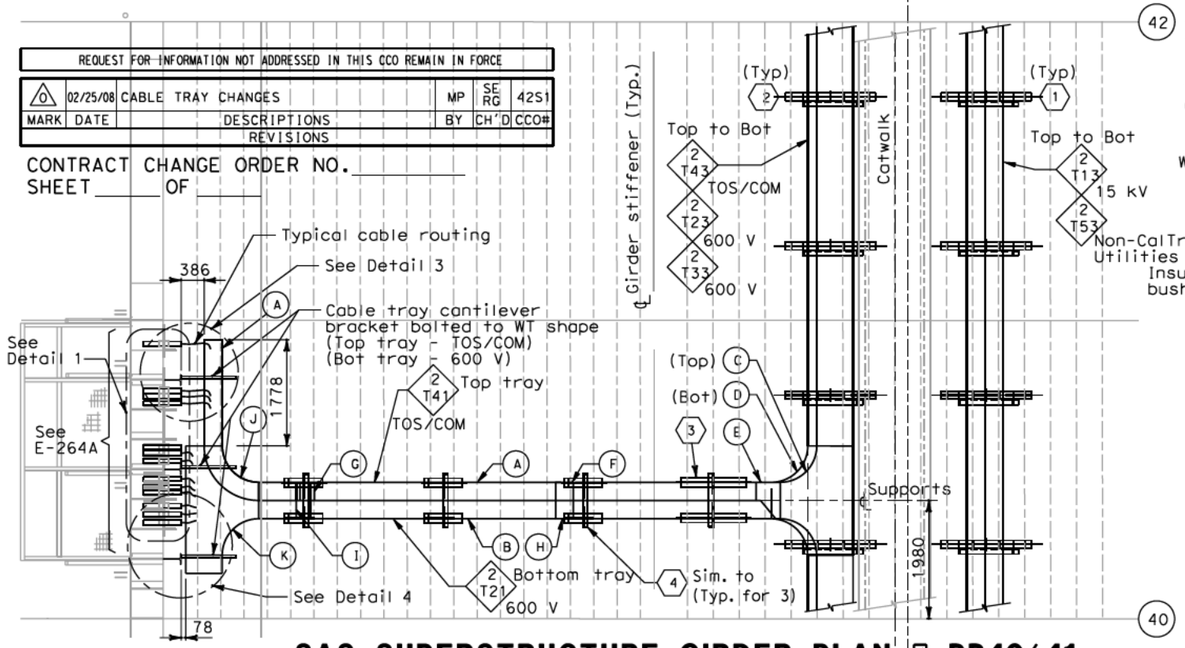

SAS SUPERSTRUCTURE GIRDER PLAN @ PP40/41

SCALE 1:50

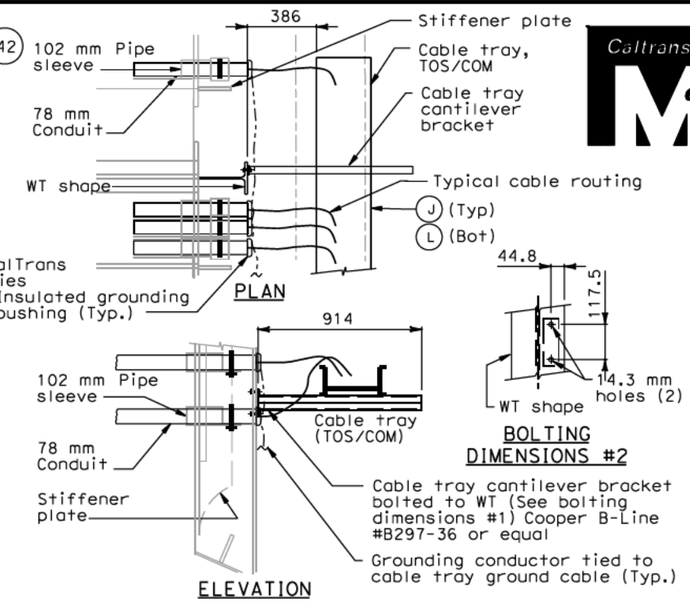

DETAIL 3

NO SCALE

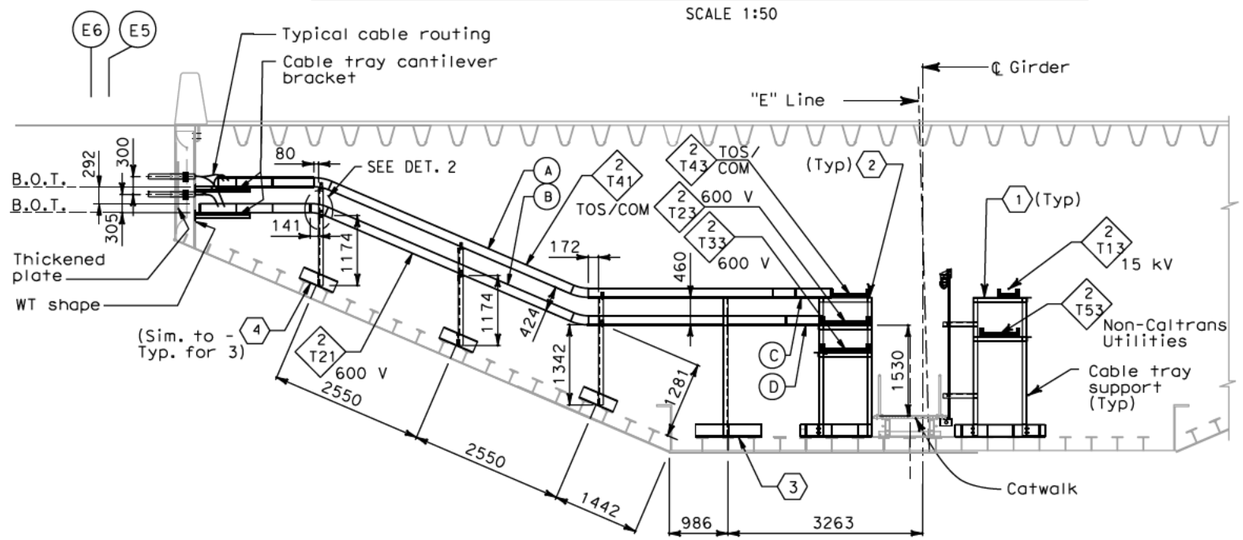

SAS SUPERSTRUCTURE GIRDER SECTION @ PP40/41

SCALE 1:50

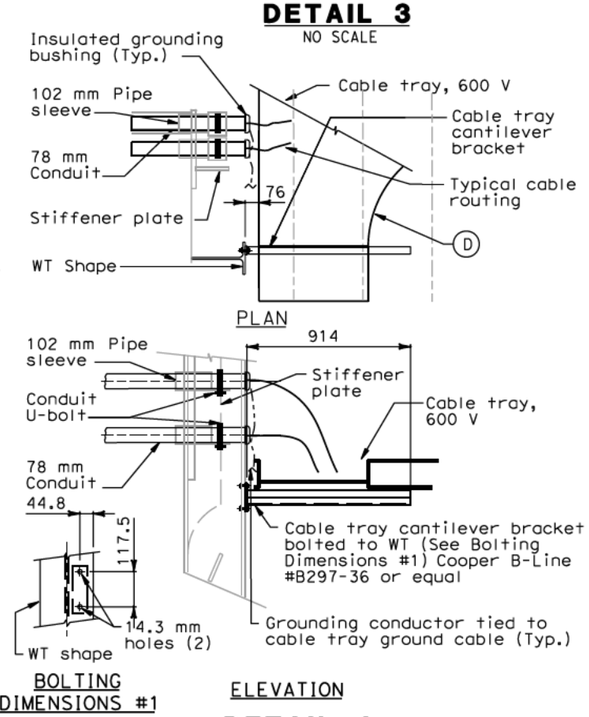

DETAIL 4

NO SCALE

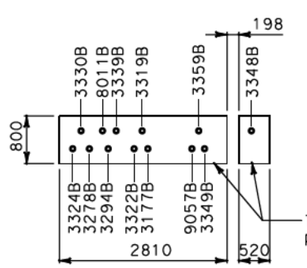

DETAIL 1

(FOR REFERENCE ONLY)
NO SCALE

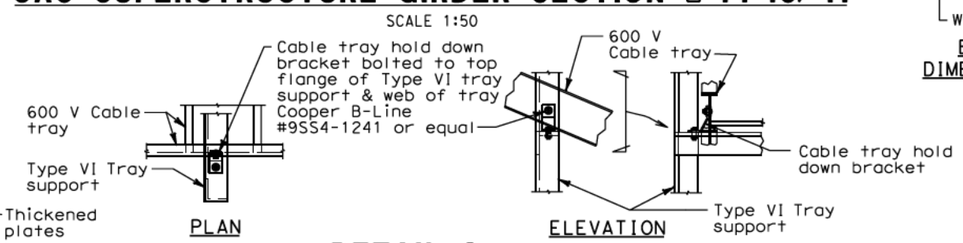

DETAIL 2

*Shown for 600 V tray. (TOS/COM tray support similar)
NO SCALE

CABLE TRAY COMPONENTS:

- (A) 305 mm Solid trough cable tray
- (B) 610 mm Ladder type cable tray
- (C) 610 mm x 610 mm Solid trough cable tray tee
- (D) 760 mm x 610 mm Ladder type cable tray reducing tee
- (E) 610 mm-to-305 mm Solid trough cable tray right reducer
- (F) 305 mm Solid trough cable tray 30° vertical inside bend
- (G) 305 mm Solid trough cable tray 30° vertical outside bend
- (H) 610 mm Ladder type cable tray 30° vertical inside bend
- (I) 610 mm Ladder type cable tray 30° vertical outside bend
- (J) 305 mm Solid trough cable tray 90° elbow
- (K) 610 mm x 610 mm Ladder type cable tray tee

NOTES:

1. Transverse support beam shall be located at 1250 mm from floorbeam.
2. For PB-2A support details, see AS-drawings.
3. For details not shown, see Girder Access Details No. 2 sheet.
4. For location of pipe sleeves at the utility platform crossbeams, see Typical Crossbeam Details sheets.
5. For details of pipe sleeves at all other crossbeams, see Utility Details sheets.

SHEET NOTES:

- (1) For Type I cable tray support details, see AS-sheets.
- (2) For Type II cable tray support details, see AS-sheets.
- (3) For Type V cable tray support details, see AS-sheets.
- (4) For Type VI cable tray support details, see AS-sheets.

DETAILS
SAS SUPERSTRUCTURE GIRDER EASTBOUND TYPICAL TRAY AND CONDUIT INSTALLATION

SCALE AS SHOWN

E-207C

THIS PLAN ACCURATE FOR ELECTRICAL WORK ONLY.

ALL DIMENSIONS ARE IN MILLIMETERS UNLESS OTHERWISE SHOWN

FOR REDUCED PLANS ORIGINAL SCALE IS IN MILLIMETERS 0 20 40 60 80

DGN FILE =>T:\13103\MS\pse\SAS Struc\CCO\SAS CCO42S1\CCO 42S1 Final Submittal 2008-07-11\04-0120f1_0232S03.dgn
USERNAME =>llorico

CU 04251 EA 0120F1

DATE PLOTTED => 7/11/2008
TIME PLOTTED => 2:57:34 PM

LAST REVISION 00-00-00

STATE OF CALIFORNIA - DEPARTMENT OF TRANSPORTATION

DESIGN OVERSIGHT BEHZAD GOLEMOHAMMADI

CALCULATED/DESIGNED BY | CHECKED BY | DATE | REVISED BY | DATE REVISED

DIST	COUNTY	ROUTE	KILOMETER POST TOTAL PROJECT	SHEET No	TOTAL SHEETS
04	SF	80	13.2/13.9	232 S4	1204

REGISTERED ELECTRICAL ENGINEER 2/22/08 DATE

PLANS APPROVAL DATE

REGISTERED PROFESSIONAL ENGINEER S. A. ESTOQUE, JR. No. E-10151 Exp. 12/31/2008 ELECTRICAL STATE OF CALIFORNIA

PB AMERICAS, Inc.
A Parsons Brinckerhoff Company
303 Second St., Suite 700N
San Francisco, CA 94107-1317

The State of California or its officers or agents shall not be responsible for the accuracy or completeness of electronic copies of this plan sheet.

Caltrans now has a web site! To get to the web site, go to http://www.dot.ca.gov

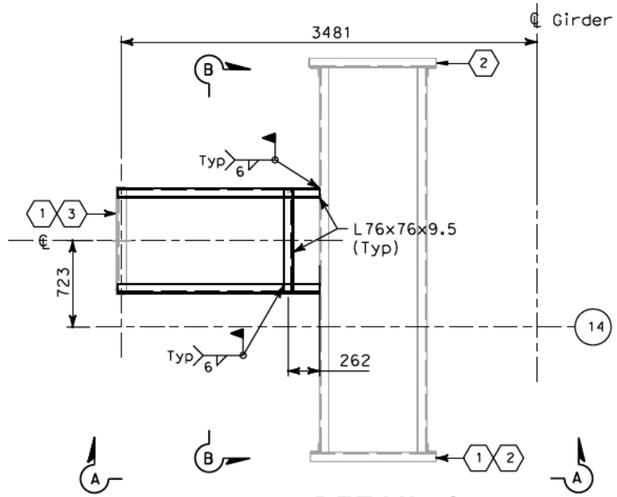

DETAIL 2
(Field Cable Tray Support to Crossbeam PP-14)
Scale 1:50

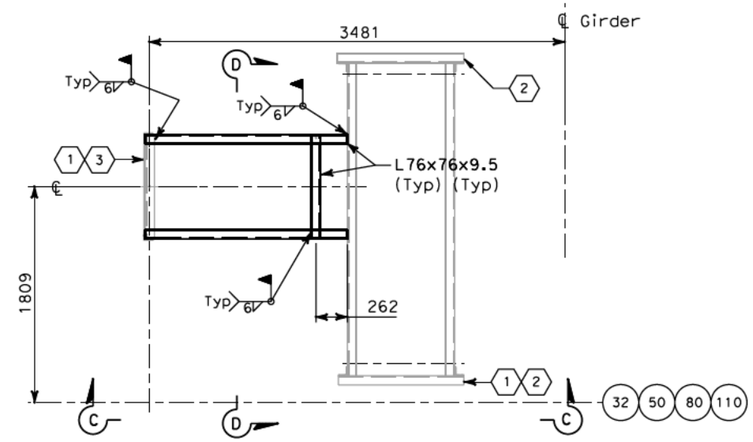

DETAIL 3
(Typical Field Cable tray Support to Crossbeam PP-32, PP-50, PP-80 and PP-110)
Scale 1:50

SHEET NOTES:

1. For cable tray support see AS-16K, AS-16L, AS-16M, AS-16N AND AS-16P.
2. Type II, for cable tray supports details, see AS-11.
3. Type V, for cable tray supports details, see AS-14.

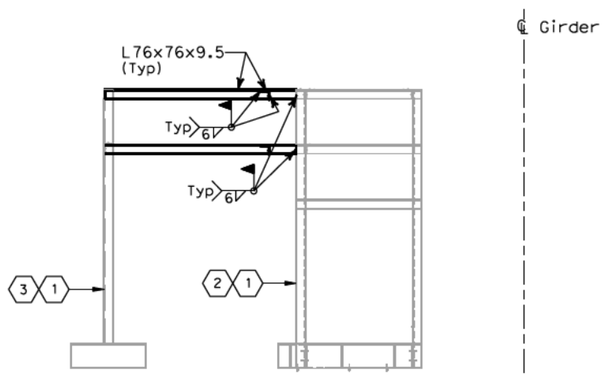

SECTION A-A
Scale 1:50

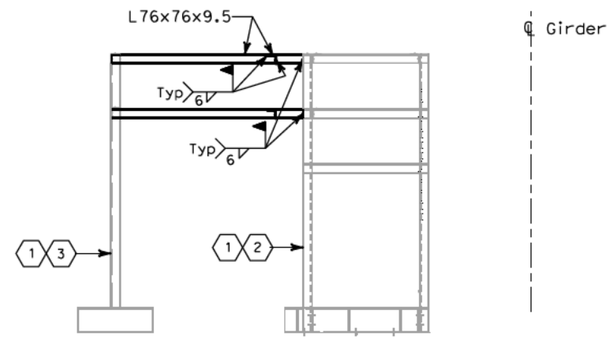

SECTION C-C
Scale 1:50

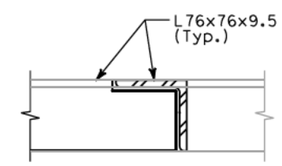

DETAIL 4
No Scale

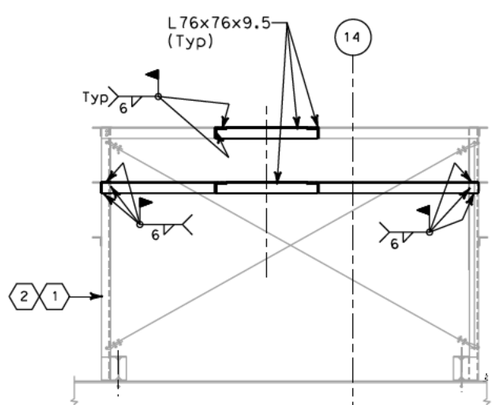

SECTION B-B
Scale 1:50

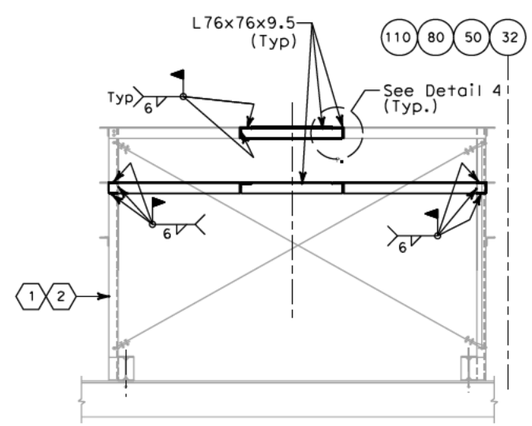

SECTION D-D
Scale 1:50

REQUEST FOR INFORMATION NOT ADDRESSED IN THIS CCO REMAIN IN FORCE					
0	02/25/08	CABLE TRAY CHANGES	TW	SE RG	42S1
MARK	DATE	DESCRIPTIONS	BY	CH'D	CCO#
REVISIONS					

CONTRACT CHANGE ORDER NO._____
SHEET _____ OF _____

DETAILS
SAS SUPERSTRUCTURE GIRDER EASTBOUND TYPICAL TRAY AND CONDUIT INSTALLATION
SCALE AS NOTED

E-207D

THIS PLAN ACCURATE FOR ELECTRICAL WORK ONLY.

ALL DIMENSIONS ARE IN MILLIMETERS UNLESS OTHERWISE SHOWN

FOR REDUCED PLANS ORIGINAL SCALE IS IN MILLIMETERS 0 20 40 60 80

DGN FILE =>T:\13103\MS\pse\SAS Struc\CCO\SAS CCO42S1\CCO 42S1 Final Submittal 2008-07-11\04-0120f1_0232S04.dgn
USERNAME =>llorico

CU 04251 | EA 0120F1

LAST REVISION 00-00-00 | DATE PLOTTED => 7/11/2008 TIME PLOTTED => 2:57:50 PM

STATE OF CALIFORNIA - DEPARTMENT OF TRANSPORTATION
Caltrans

DESIGN OVERSIGHT
BEHZAD GOLEMOHAMMADI

CALCULATED/DESIGNED BY | CHECKED BY | DATE | REVISED BY | DATE REVISED

DIST	COUNTY	ROUTE	KILOMETER POST TOTAL PROJECT	SHEET No	TOTAL SHEETS
04	SF	80	13.2/13.9	233 R2	1204

Jens Erlingsson 12/19/02
REGISTERED ELECTRICAL ENGINEER DATE

12-6-04
PLANS APPROVAL DATE

REGISTERED PROFESSIONAL ENGINEER JENS ERLINGSSON No. 8249 Exp. 9/30/06 ELECTRICAL STATE OF CALIFORNIA

PB POWER, Inc.
A Parsons Brinckerhoff Company
303 Second St., Suite 700N
San Francisco, CA 94107-1317

The State of California or its officers or agents shall not be responsible for the accuracy or completeness of electronic copies of this plan sheet.

Caltrans now has a web site! To get to the web site, go to http://www.dot.ca.gov

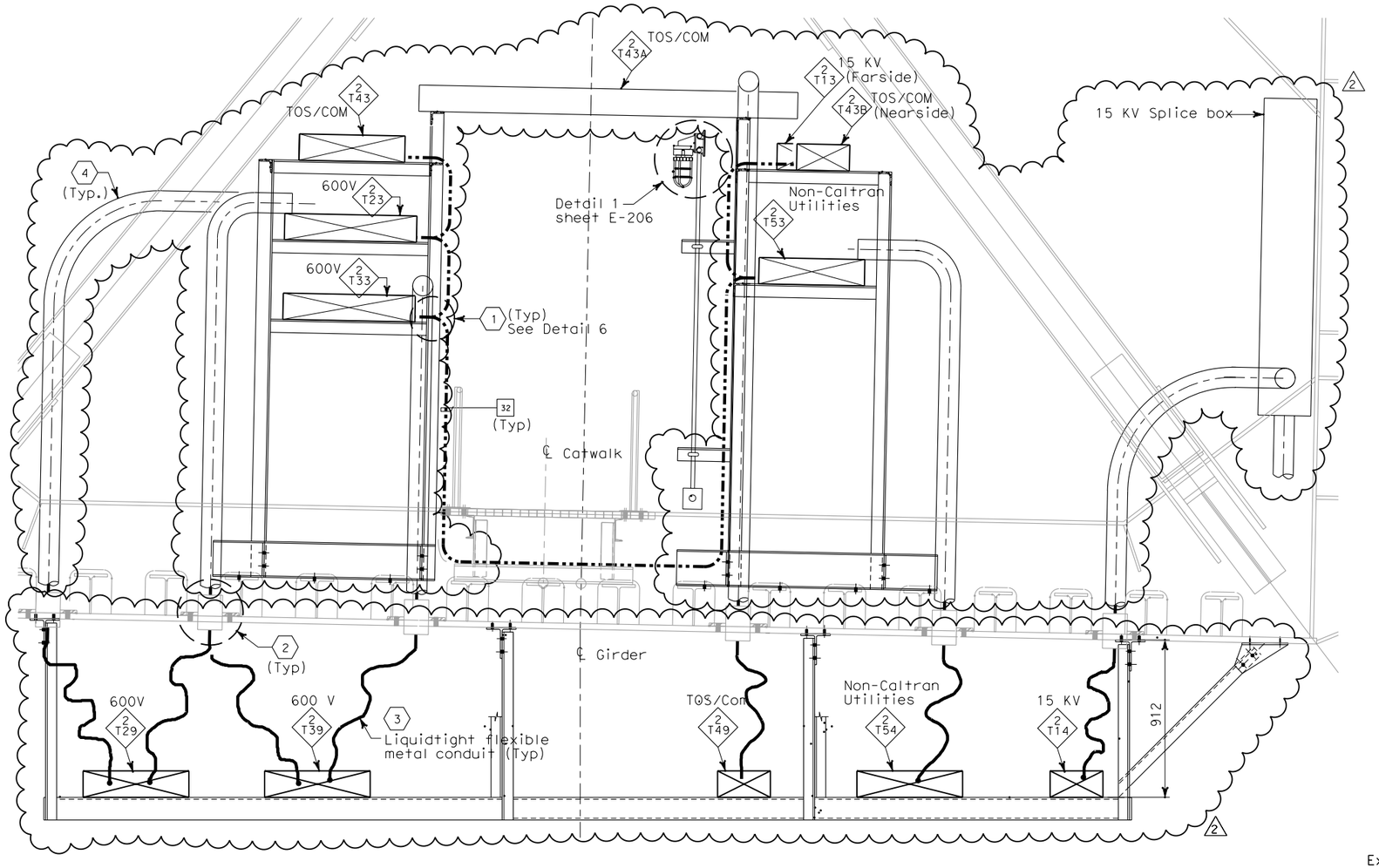

SECTION E-E - TYPICAL CABLE TRAY SUPPORT

SCALE: 1:15

SHEET NOTES:

1. Provide connections to 500 kcmil system ground for all cable trays, every 200 meters.
2. For location of conduit penetrations thru girder plate, see Utility Detail No. 1 and Utility Layout sheets respectively. To prevent moisture from passing inside the sleeve, Contractor shall install sealant after conduit have been installed. Spares shall be plugged and capped.
3. For installation detail of liquidtight flexible metal conduits below girder, see sheet E-212.
4. For installation detail of conduits inside girder, see sheet E-212B.

NOTES:

1. See structural drawings for Catwalk Support Details.
2. For SAS Superstructure Girder access detail #2, see structural dwgs.
3. Ground cable shall be installed along full length of the 15 kV cable tray only.
4. For typical cable tray support details, see AS-sheets.

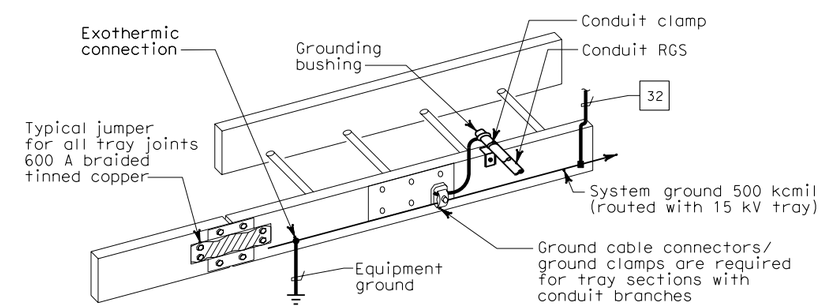

GROUNDING OF METALLIC RACEWAYS

DETAIL 6

REGISTERED PROFESSIONAL ENGINEER S. A. ESTOQUE, JR. No. E-10151 Exp. 12/31/2008 ELECTRICAL STATE OF CALIFORNIA

FOR REVISION ONLY

REQUEST FOR INFORMATION NOT ADDRESSED IN THIS CCO REMAIN IN FORCE					
2	02/25/08	CABLE TRAY CHANGES	RG	SE	42S1
1	01/10/06	REVISED NOTE. BIDDER INQUIRY #330	CR	JE	11
MARK	DATE	DESCRIPTIONS	BY	CH'D	CCO#
REVISIONS					

CONTRACT CHANGE ORDER NO._____
SHEET _____ OF _____

DETAILS
SAS SUPERSTRUCTURE GIRDER EASTBOUND
TYPICAL CABLE TRAY AND GROUNDING INSTALLATION 2

SCALE AS NOTED

E-208

STATE OF CALIFORNIA - DEPARTMENT OF TRANSPORTATION
Caltrans

DESIGN OVERSIGHT: BEHZAD GOLEMOHAMMADI

CALCULATED/ DESIGNED BY	EDC	DATE 08/02	REVISED BY
CHECKED BY	CYF	3/04	DATE REVISED

THIS PLAN ACCURATE FOR ELECTRICAL WORK ONLY.

ALL DIMENSIONS ARE IN MILLIMETERS UNLESS OTHERWISE SHOWN

FOR REDUCED PLANS ORIGINAL SCALE IS IN MILLIMETERS 0 20 40 60 80

DGN FILE =>T:\13103\MS\pse\SAS Struc\CCO\SAS CCO42S1\CCO 42S1 Final Submittal 2008-07-11\04-0120f1_0233R02.dgn
USERNAME =>llorico

CU 04251 EA 0120F1

LAST REVISION 00-00-00
DATE PLOTTED => 7/11/2008
TIME PLOTTED => 2:58:11 PM

DIST	COUNTY	ROUTE	KILOMETER POST TOTAL PROJECT	SHEET No	TOTAL SHEETS
04	SF	80	13.2/13.9	234 R1	1204

Caltrans Metric

Jens Erlingsson 12/19/02
REGISTERED ELECTRICAL ENGINEER DATE

12-6-04
PLANS APPROVAL DATE

REGISTERED PROFESSIONAL ENGINEER JENS ERLINGSSON No. 8249 Exp. 9/30/06 ELECTRICAL STATE OF CALIFORNIA

PB POWER, Inc.
A Parsons Brinckerhoff Company
303 Second St., Suite 700N
San Francisco, CA 94107-1317

The State of California or its officers or agents shall not be responsible for the accuracy or completeness of electronic copies of this plan sheet.

Caltrans now has a web site! To get to the web site, go to http://www.dot.ca.gov

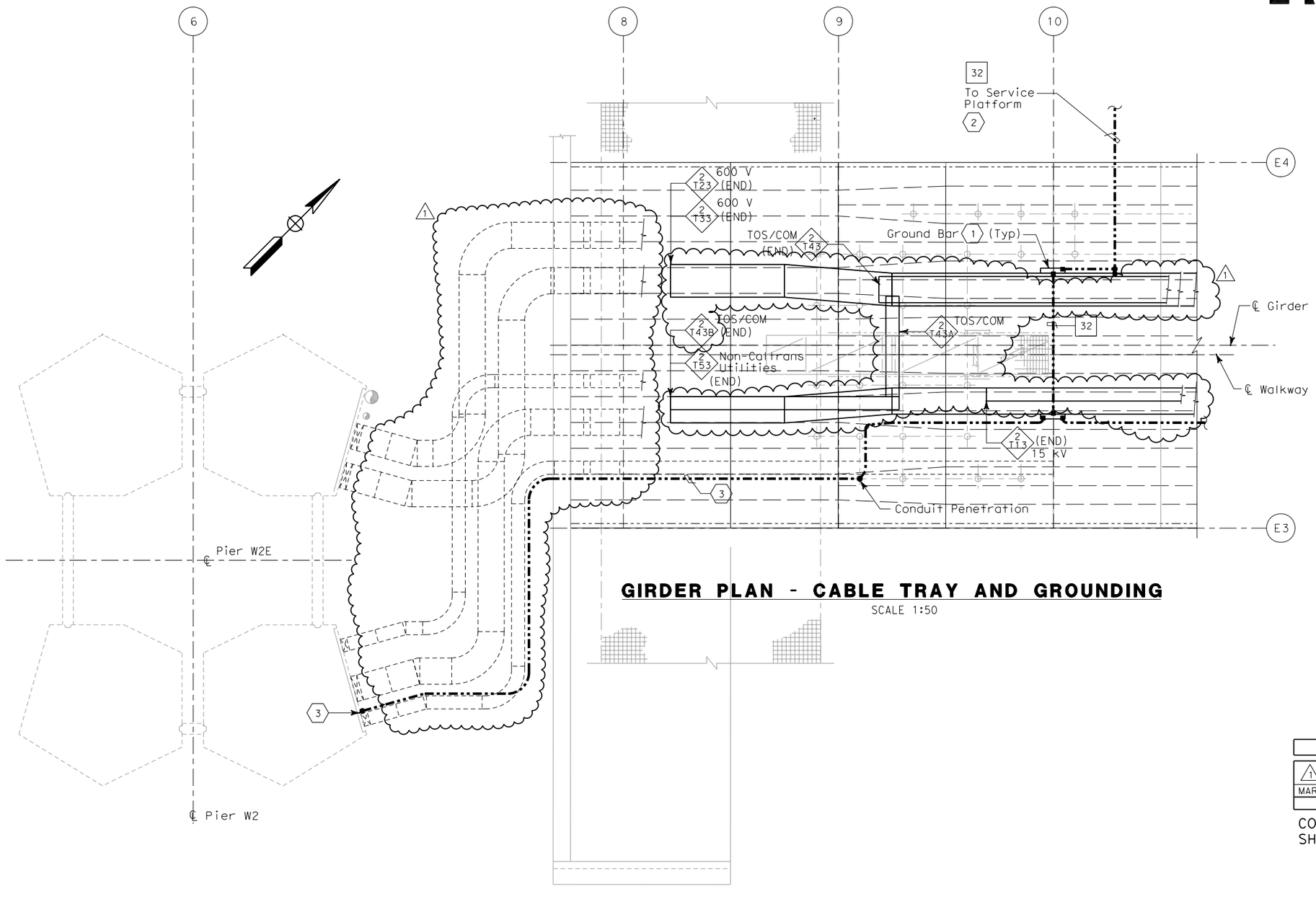

GIRDER PLAN - CABLE TRAY AND GROUNDING

SCALE 1:50

SHEET NOTES:

1. Ground bar detail see sheet E-208.
2. For actual conduit locations, see Girder Level, Cable Tray and conduits plans. See sheets E-181 thru E-186.
3. 500 kcmil bare copper ground cable run along with tray at column to pier footing collar.

REGISTERED PROFESSIONAL ENGINEER S. A. ESTOQUE, JR. No. E-10151 Exp. 12/31/2008 ELECTRICAL STATE OF CALIFORNIA

FOR REVISION ONLY

REQUEST FOR INFORMATION NOT ADDRESSED IN THIS CCO REMAIN IN FORCE

MARK	DATE	DESCRIPTIONS	BY	CH'D	CCO#
1	02/25/08	CABLE TRAY CHANGES	RG	SE	42S1

REVISIONS

CONTRACT CHANGE ORDER NO._____
SHEET _____ OF _____

DETAILS
SAS SUPERSTRUCTURE GIRDER EASTBOUND
TYPICAL TRAY AND GROUNDING INSTALLATION AT PIERS W2E

SCALE AS NOTED

E-211

THIS PLAN ACCURATE FOR ELECTRICAL WORK ONLY.

ALL DIMENSIONS ARE IN MILLIMETERS UNLESS OTHERWISE SHOWN.

STATE OF CALIFORNIA - DEPARTMENT OF TRANSPORTATION
Caltrans

DESIGN OVERSIGHT: BEHZAD GOLEMOHAMMADI

CALCULATED/DESIGNED BY	EDC	DATE 08/02	REVISED BY
CHECKED BY	CYF	08/02	DATE REVISED

FOR REDUCED PLANS ORIGINAL SCALE IS IN MILLIMETERS 0 20 40 60 80

DGN FILE =>T:\13103\MS\pse\SAS Struc\CCO\SAS CCO42S1\CCO 42S1 Final Submittal 2008-07-11\04-0120f1_0234R01.dgn
USERNAME =>llorico
CU 04251
EA 0120F1

LAST REVISION 00-00-00
DATE PLOTTED => 7/11/2008
TIME PLOTTED => 2:58:31 PM

DIST	COUNTY	ROUTE	KILOMETER POST TOTAL PROJECT	SHEET No	TOTAL SHEETS
04	SF	80	13.2/13.9	235 R1	1204

REGISTERED ELECTRICAL ENGINEER 12/19/02 DATE

12-6-04
PLANS APPROVAL DATE

REGISTERED PROFESSIONAL ENGINEER JENS ERLINGSSON No. 8249 Exp. 9/30/06 ELECTRICAL STATE OF CALIFORNIA

PB POWER, Inc.
A Parsons Brinckerhoff Company
303 Second St., Suite 700N
San Francisco, CA 94107-1317

The State of California or its officers or agents shall not be responsible for the accuracy or completeness of electronic copies of this plan sheet.

Caltrans now has a web site! To get to the web site, go to http://www.dot.ca.gov

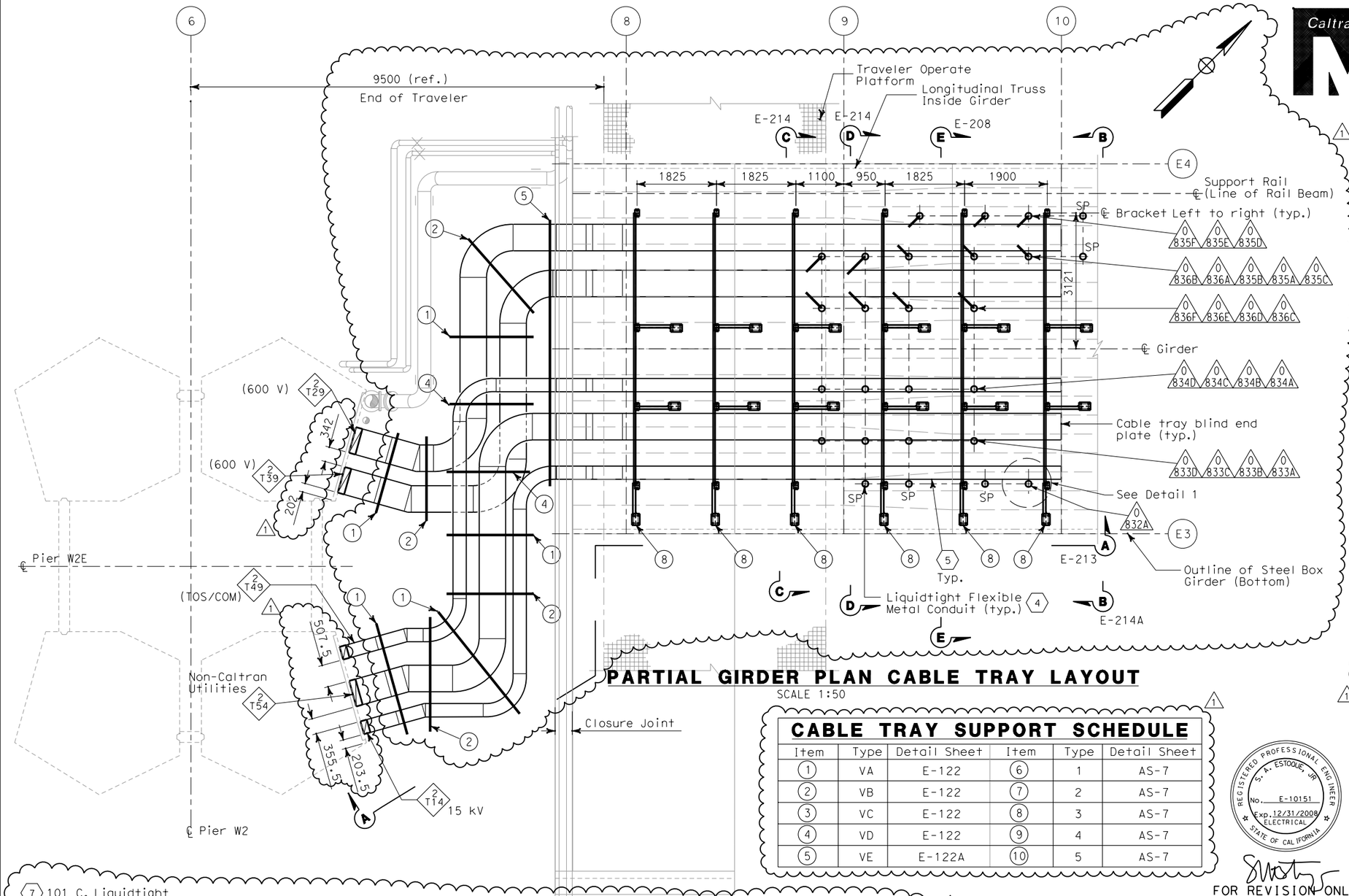

PARTIAL GIRDER PLAN CABLE TRAY LAYOUT

SCALE 1:50

SHEET NOTES:

1. For cable tray supports details, see Cable Tray Support Schedule table.
2. Cable trays shall be as specified per specification unless noted otherwise.
3. Cable and location of penetrations thru girder plate, see Utility Detail No. 1 and Utility Layout respectively of Superstructure and Tower Drawings. To prevent moisture from entering girder, contractor to seal the space between sleeves and conduits. Spare pipe sleeves shall be provided with threaded cap at exterior end.
4. For continuation of conduit to cable trays inside OBG see E-212A.
5. Cable trays shall be anchored to supports and shall have solid cover with heavy duty cover clamps.
6. Install neoprene rubber around cable tray cover opening for protection to liquidtight flexible metal conduits as it enter the cable tray. Seal opening as needed.
7. Liquidtight flexible metal conduits shall be anchored to supports or cable trays.
8. Contractor may adjust the location of cable tray supports below W2 Pier Cap Beam to suit field condition and provide additional seismic bracing as required.

CABLE TRAY SUPPORT SCHEDULE

Item	Type	Detail Sheet	Item	Type	Detail Sheet
1	VA	E-122	6	1	AS-7
2	VB	E-122	7	2	AS-7
3	VC	E-122	8	3	AS-7
4	VD	E-122	9	4	AS-7
5	VE	E-122A	10	5	AS-7

REGISTERED PROFESSIONAL ENGINEER S. A. ESTOQUE, JR. No. E-10151 Exp. 12/31/2008 ELECTRICAL STATE OF CALIFORNIA

FOR REVISION ONLY

NOTES:

1. References:
   - For circuit and conduit/cable tray schedules, see sheets starting at E-401.
   - For locations of cable tray support embeds, see AS sheets.
2. For other related work, not shown on this sheet, see Electrical Special Provisions.
3. For actual conduit locations, see girder level, cable tray and conduits plans. See sheets E-181 thru E-186.
4. 500 kcmil bare copper ground cable run along with tray at column to pier footing collar.
5. Ground bar detail see sheet E-208.

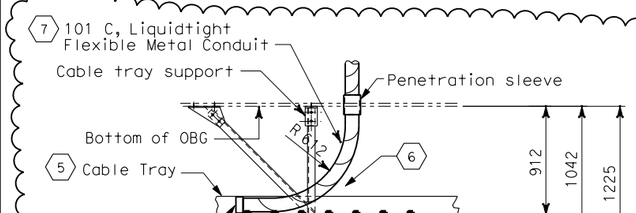

DETAIL 1

SCALE 1:50
CABLE TRAY TOP ENTRY

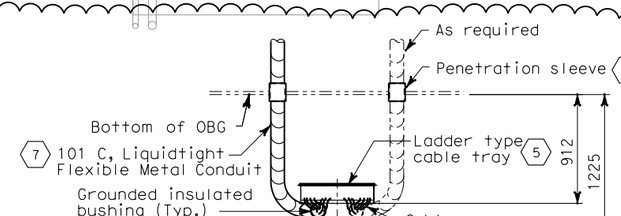

ALTERNATE

SCALE 1:50
CABLE TRAY BOTTOM ENTRY
(Cable tray supports not shown for clarity)

REQUEST FOR INFORMATION NOT ADDRESSED IN THIS CCO REMAIN IN FORCE					
1	02/25/08	CABLE TRAY CHANGES	RG	SE	42S1
MARK	DATE	DESCRIPTIONS	BY	CH'D	CCO#
		REVISIONS			

CONTRACT CHANGE ORDER NO._____
SHEET _____ OF _____

DETAILS
SAS SUPERSTRUCTURE GIRDER EASTBOUND
TYPICAL CABLE TRAY AND CONDUIT INSTALLATION AT PIER W2E

SCALE AS NOTED

E-212

THIS PLAN ACCURATE FOR ELECTRICAL WORK ONLY.

ALL DIMENSIONS ARE IN MILLIMETERS UNLESS OTHERWISE SHOWN.

FOR REDUCED PLANS ORIGINAL SCALE IS IN MILLIMETERS 0 20 40 60 80

DGN FILE =>T:\13103\MS\pse\SAS Struc\CCO\SAS CCO42S1\CCO 42S1 Final Submittal 2008-07-11\04-0120f1_0235R01.dgn
USERNAME =>llorico

CU 04251 | EA 0120F1

LAST REVISION 00-00-00 | DATE PLOTTED => 7/11/2008 TIME PLOTTED => 2:58:47 PM

STATE OF CALIFORNIA - DEPARTMENT OF TRANSPORTATION
Caltrans

DESIGN OVERSIGHT
BEHZAD GOLEMOHAMMADI

CALCULATED/DESIGNED BY EDC
CHECKED BY CYF

MARK	DATE	REVISED BY	DATE REVISED
1	08/02		08/02

DIST	COUNTY	ROUTE	KILOMETER POST TOTAL PROJECT	SHEET No	TOTAL SHEETS
04	SF	80	13.2/13.9	235 S1	1204

REGISTERED ELECTRICAL ENGINEER — DATE 2/22/08

REGISTERED PROFESSIONAL ENGINEER S. A. ESTOQUE, JR. No. E-10151 Exp. 12/31/2008 ELECTRICAL STATE OF CALIFORNIA

PLANS APPROVAL DATE

PB AMERICAS, Inc.
A Parsons Brinckerhoff Company
303 Second St., Suite 700N
San Francisco, CA 94107-1317

The State of California or its officers or agents shall not be responsible for the accuracy or completeness of electronic copies of this plan sheet.

Caltrans now has a web site! To get to the web site, go to http://www.dot.ca.gov

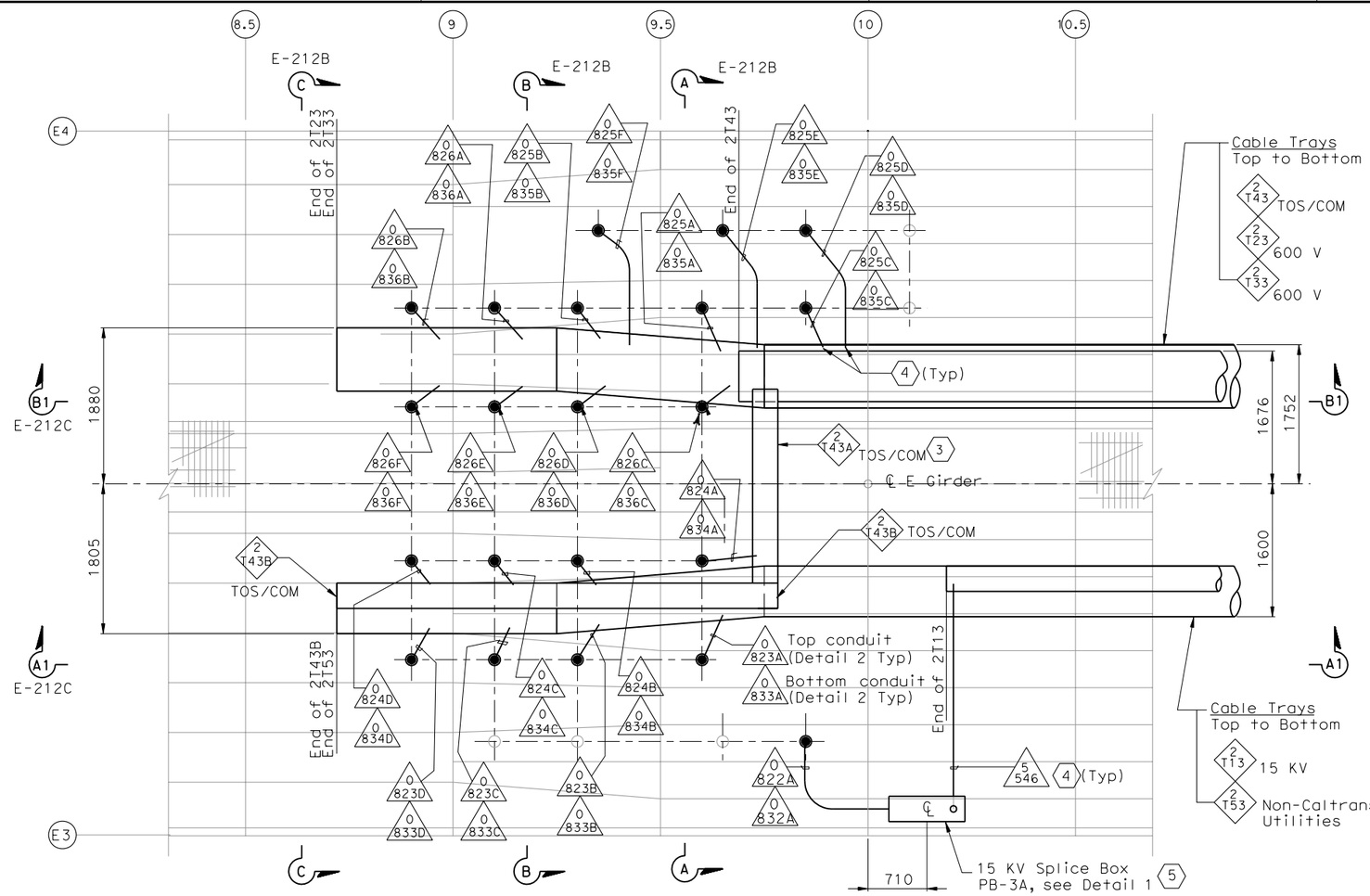

PARTIAL GIRDER-CABLE TRAY PLAN (6)

SCALE 1:1.5x

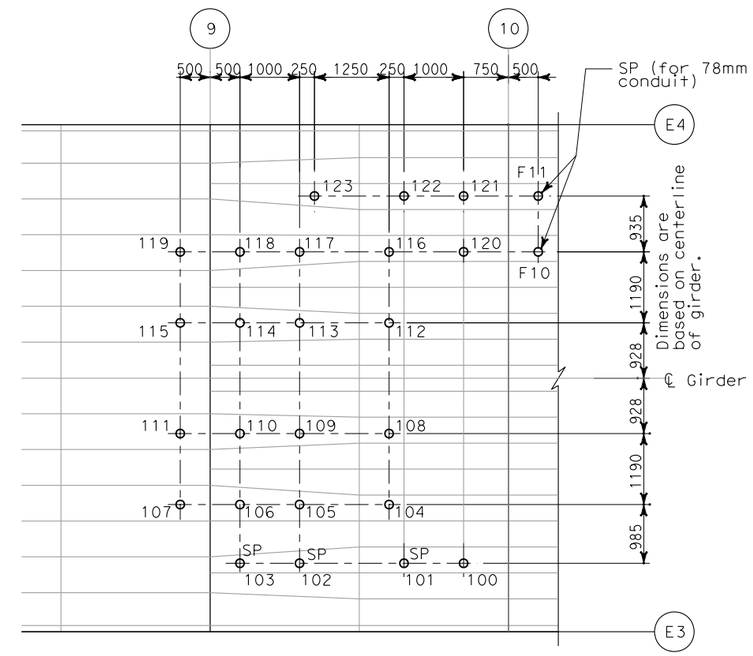

PIPE SLEEVE LOCATION-PLAN (6)

SCALE 1:100

SHEET NOTES:

(1) To prevent moisture from entering girder. contractor to seal the space between sleeves and conduits.

(2) Down to cable tray, for continuation see sheet E-212.

(3) Provide drop out tray fitting.

(4) Provide insulated ground bushing at end of conduit.

(5) 15 KV splice box is bolted to longitudinal shear plate and installed by field.

(6) See table A, sheet E-212B.

NOTES:

1. References:
   - For circuit and conduit/cable tray schedules, see sheets starting at E-401.
2. (SP) Denotes spare pipe sleeve for future 103 mm conduit. Contractor to provide threaded cap at exterior end (Unless Otherwise Noted).
3. For cable tray supports details, see AS sheets.
4. Cable tray fittings shall be 610 radius.

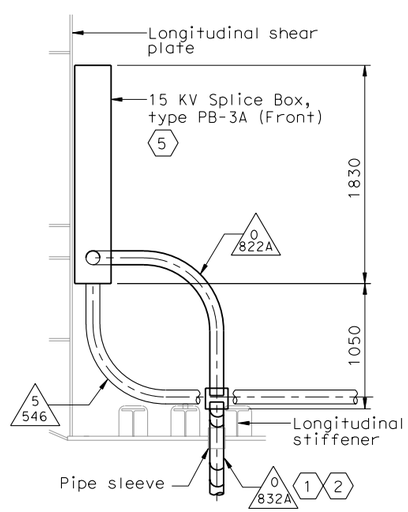

DETAIL 1

SCALE 1:50

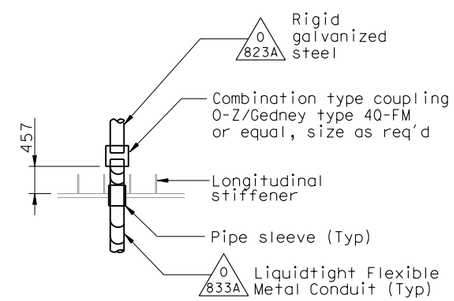

DETAIL 2

SCALE 1:50

REQUEST FOR INFORMATION NOT ADDRESSED IN THIS CCO REMAIN IN FORCE

MARK	DATE	DESCRIPTIONS	BY	CH'D	CCO#
0	02/25/08	CABLE TRAY CHANGES	TW MP	RG SE	42S1

REVISIONS

CONTRACT CHANGE ORDER NO._____
SHEET _____ OF _____

DETAILS
SAS SUPERSTRUCTURE GIRDER EASTBOUND CABLE TRAY AND CONDUIT AT PIER W2E

SCALE AS NOTED

E-212A

THIS PLAN ACCURATE FOR ELECTRICAL WORK ONLY.

ALL DIMENSIONS ARE IN MILLIMETERS UNLESS OTHERWISE SHOWN

FOR REDUCED PLANS ORIGINAL SCALE IS IN MILLIMETERS 0 20 40 60 80

DGN FILE =>T:\13103\MS\pse\SAS Struc\CCO\SAS CC042S1\CCO 42S1 Final Submittal 2008-07-11\04-0120f1_0235S01.dgn
USERNAME =>llorico

CU 04251 EA 0120F1

DATE PLOTTED => 7/11/2008
TIME PLOTTED => 2:59:07 PM

LAST REVISION 00-00-00

STATE OF CALIFORNIA - DEPARTMENT OF TRANSPORTATION

DESIGN OVERSIGHT BEHZAD GOLEMOHAMMADI

CALCULATED/DESIGNED BY | CHECKED BY | DATE | REVISED BY | DATE REVISED

DIST	COUNTY	ROUTE	KILOMETER POST TOTAL PROJECT	SHEET No	TOTAL SHEETS
04	SF	80	13.2/13.9	235 S2	1204

REGISTERED ELECTRICAL ENGINEER — DATE 2/22/08

PLANS APPROVAL DATE

REGISTERED PROFESSIONAL ENGINEER — S. A. ESTOQUE, JR. — No. E-10151 — Exp. 12/31/2008 ELECTRICAL — STATE OF CALIFORNIA

PB AMERICAS, Inc.
A Parsons Brinckerhoff Company
303 Second St., Suite 700N
San Francisco, CA 94107-1317

The State of California or its officers or agents shall not be responsible for the accuracy or completeness of electronic copies of this plan sheet.

Caltrans now has a web site! To get to the web site, go to http://www.dot.ca.gov

Caltrans Metric

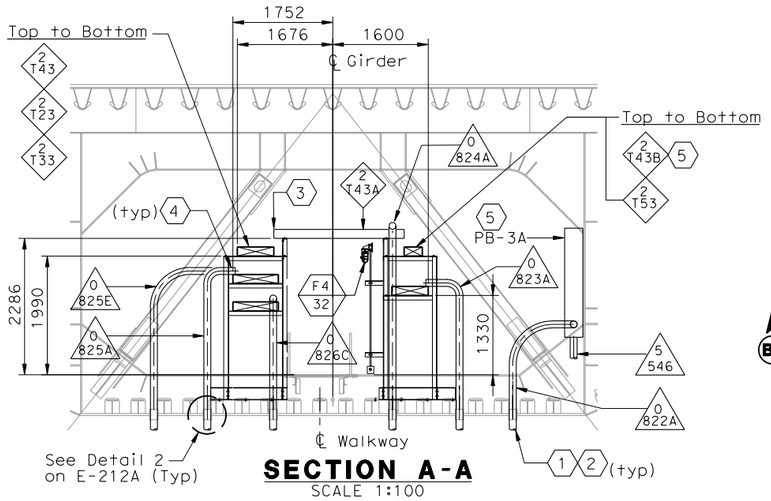

SECTION A-A
SCALE 1:100

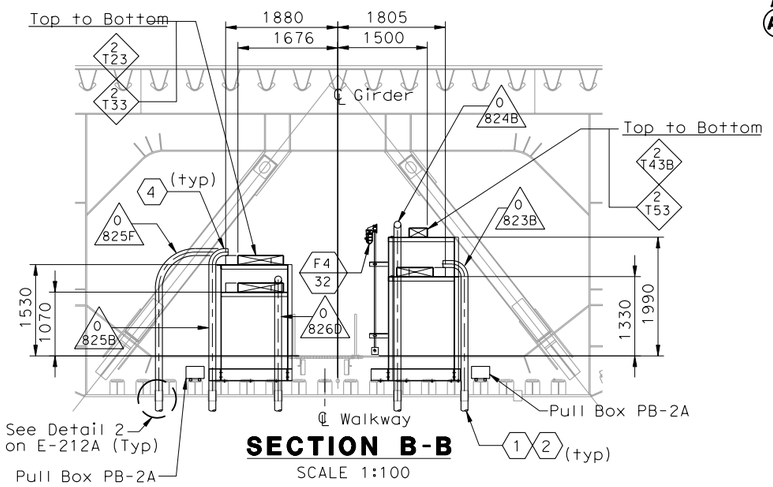

SECTION B-B
SCALE 1:100

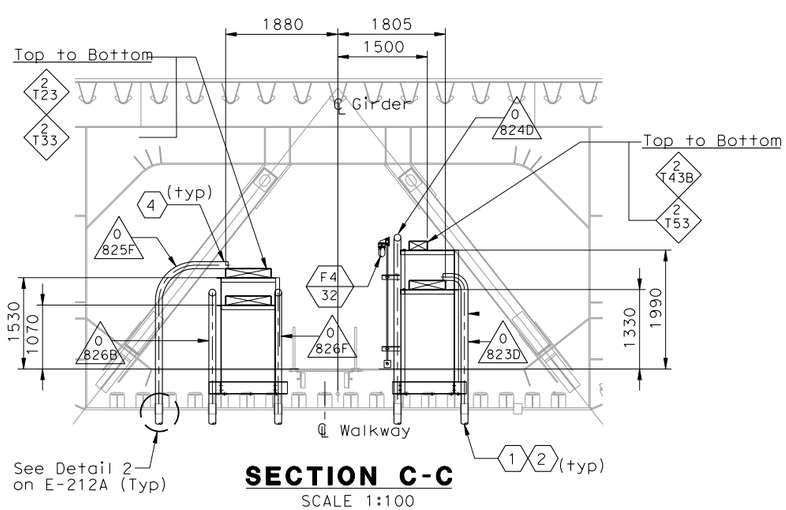

SECTION C-C
SCALE 1:100

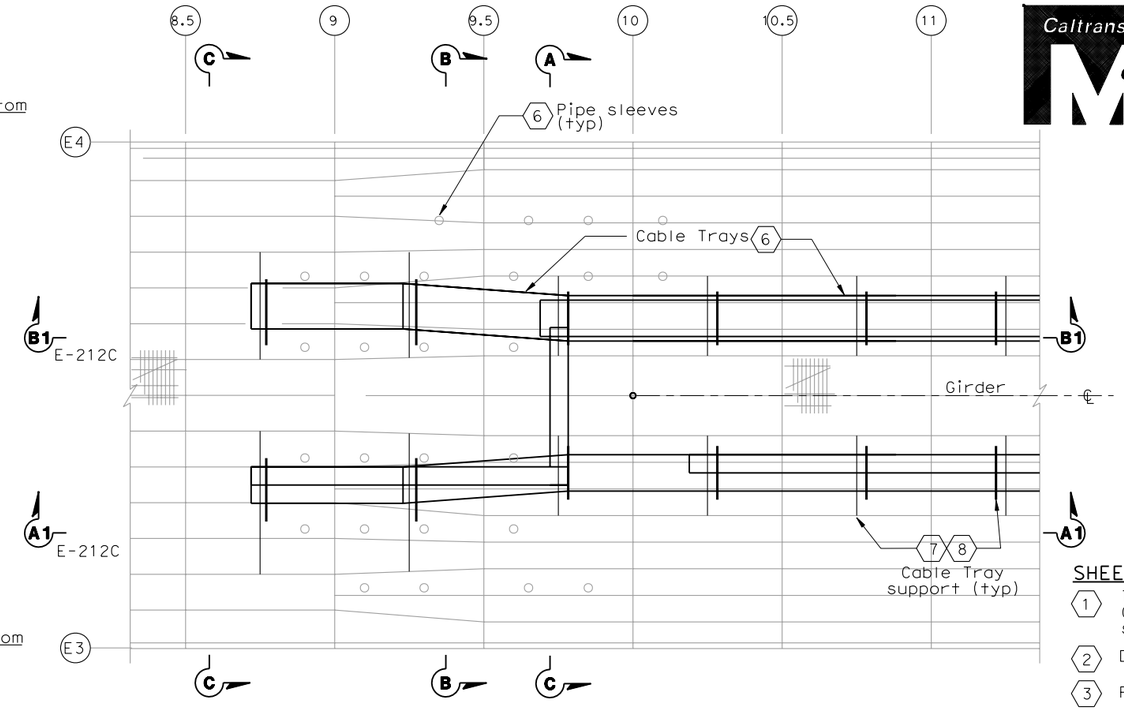

CABLE TRAY SUPPORT LOCATION-PLAN
SCALE 1:100

TABLE A (6)

Tray Number (Below Structure)	Conduit number Pipe Sleeve no. (Inside Girder)	Tray Number (Inside Girder)
2 T14 15 KV	0 822A, SP, SP, SP 100 101 102 103	To PB-3A Pull Box
2 T54 Non-Caltrans Uitilities	0 823A, 0 823B, 0 823C, 0 823D 104 105 106 107	2 T53 Non-Caltrans Uitilities
2 T49 TOS/COM	0 824A, 0 824B, 0 824C, 0 824D 108 109 110 111	2 T43A, 2 T43B TOS/COM
2 T29 600 V	0 825A, 0 825B, 0 825C, 0 825D, 0 825E, 0 825F 116 117 120 121 122 123	2 T23 600 V
2 T39 600 V	0 826A, 0 826B, 0 826C, 0 826D, 0 826E, 0 826F 118 119 112 113 114 115	2 T33 600 V
	-, - F10 F11	

SHEET NOTES:

1. To prevent moisture from entering girder, Contractor to seal the space between sleeves and conduits.
2. Down to pull box, for details see sheet E-212.
3. Provide drop out cable tray.
4. Provide insulated ground bushing at end of conduit.
5. 15 KV splice box is bolted to longitudinal shear plate and installed by field.
6. For cable trays inside girder, pipe sleeves, see sheet E-212A. The cable cable trays below W2 cap beam, see sheet E-212.
7. The Contractor to provide cable tray hold down clamps.
8. For cable tray support see AS-16K.

NOTES:

1. References:
   - For circuit and conduit/cable tray schedules, see sheets starting at E-401.
2. (SP) Denotes spare pipe sleeve for 103 mm conduit. Contractor to provide threaded cap at exterior end (Unless Otherwise Noted).
3. For cable tray support details, see AS sheets.
4. Cable tray fittings shall be 610 radius.

REQUEST FOR INFORMATION NOT ADDRESSED IN THIS CCO REMAIN IN FORCE

MARK	DATE	DESCRIPTIONS	BY	CH'D	CCO#
0	02/25/08	CABLE TRAY CHANGES	TW MP	RG SE	42S1

REVISIONS

CONTRACT CHANGE ORDER NO._____
SHEET _____ OF _____

DETAILS
SAS SUPERSTRUCTURE GIRDER EASTBOUND CABLE TRAY AND CONDUIT AT PIER W2E
SCALE AS NOTED

E-212B

DESIGN OVERSIGHT: BEHZAD GOLEMOHAMMADI

CALCULATED/DESIGNED BY | CHECKED BY | REVISED BY | DATE REVISED

STATE OF CALIFORNIA - DEPARTMENT OF TRANSPORTATION — Caltrans

THIS PLAN ACCURATE FOR ELECTRICAL WORK ONLY.

ALL DIMENSIONS ARE IN MILLIMETERS UNLESS OTHERWISE SHOWN

FOR REDUCED PLANS ORIGINAL SCALE IS IN MILLIMETERS: 0 20 40 60 80

DGN FILE =>T:\13103\MS\pse\SAS Struc\CCO\SAS CCO42S1\CCO 42S1 Final Submittal 2008-07-11\04-0120f1_0235S02.dgn
USERNAME =>llorico

CU 04251 | EA 0120F1

LAST REVISION 00-00-00 | DATE PLOTTED => 7/11/2008 | TIME PLOTTED => 2:59:30 PM

DIST	COUNTY	ROUTE	KILOMETER POST TOTAL PROJECT	SHEET No	TOTAL SHEETS
04	SF	80	13.2/13.9	235 S3	1204

REGISTERED ELECTRICAL ENGINEER — DATE 2/22/08

PLANS APPROVAL DATE

REGISTERED PROFESSIONAL ENGINEER S. A. ESTOQUE, JR. No. E-10151 Exp. 12/31/2008 ELECTRICAL STATE OF CALIFORNIA

PB AMERICAS, Inc.
A Parsons Brinckerhoff Company
303 Second St., Suite 700N
San Francisco, CA 94107-1317

The State of California or its officers or agents shall not be responsible for the accuracy or completeness of electronic copies of this plan sheet.

Caltrans now has a web site! To get to the web site, go to http://www.dot.ca.gov

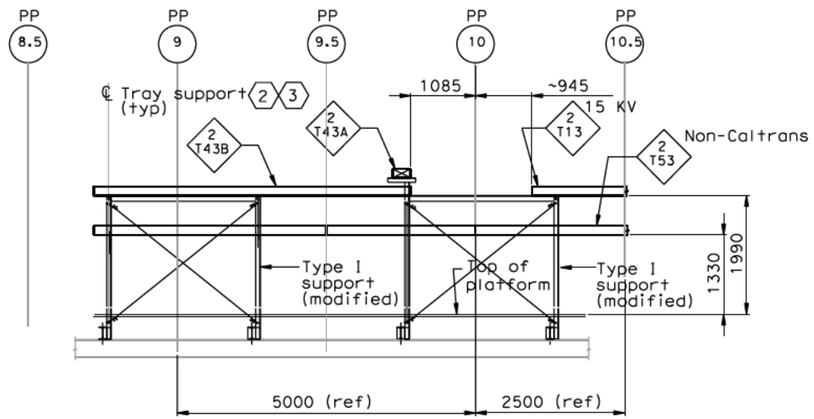

ELEVATION A1-A1

SOUTH OF EB LINE PP 8.5 TO PP 10.5
SCALE: 1:10

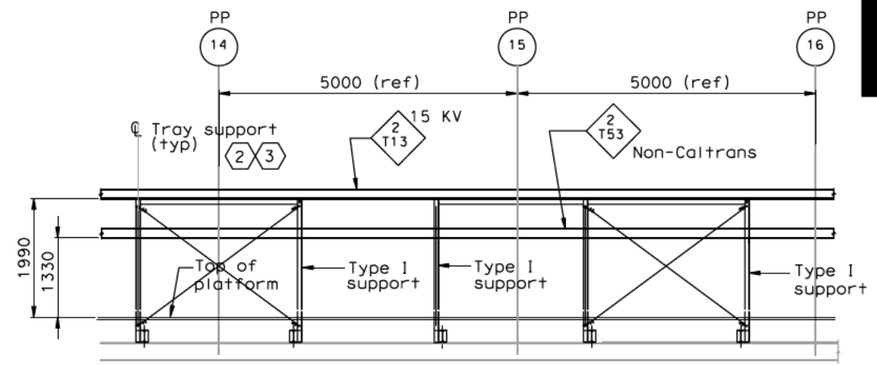

ELEVATION A2-A2

SHOWN STARTING AT PP-14
(TYPICAL CABLE TRAY SUPPORT)
SCALE: 1:10

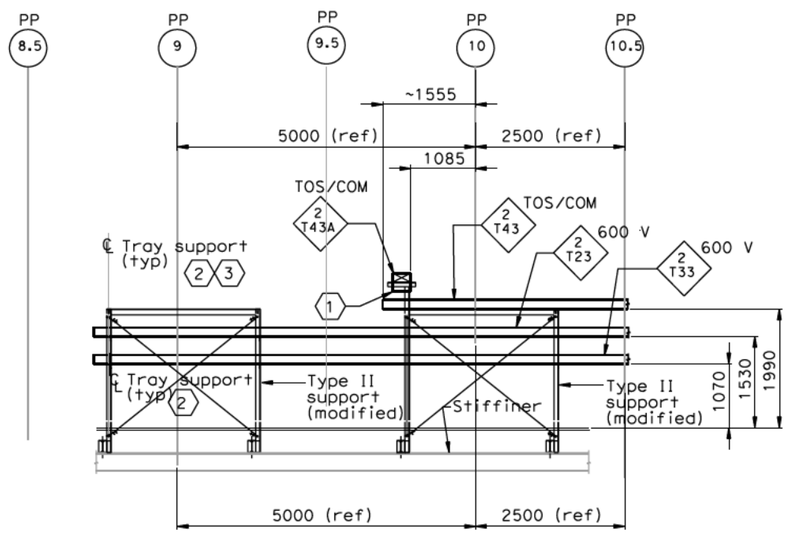

ELEVATION B1-B1

NORTH OF EB LINE PP 8.5 TO PP 10.5
SCALE: 1:10

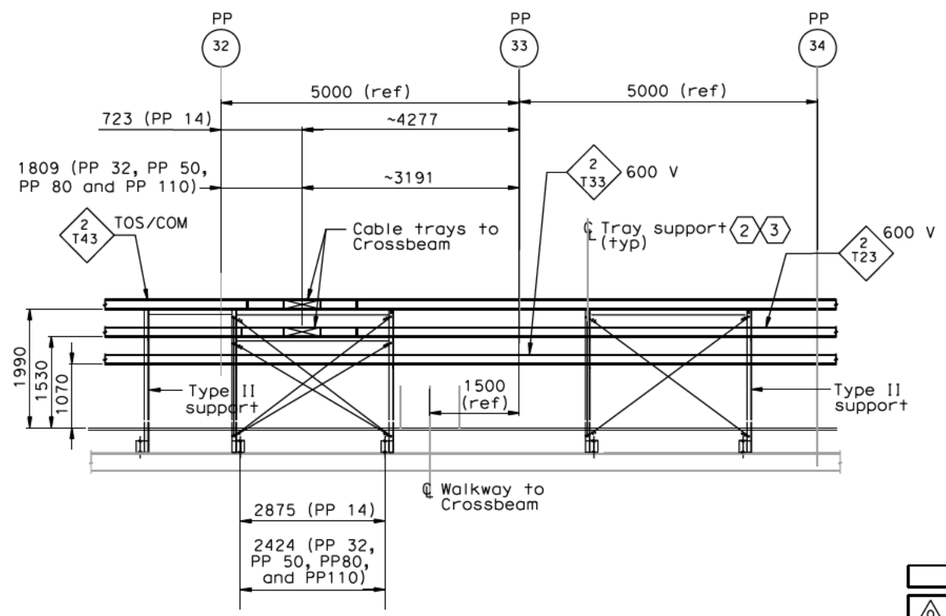

ELEVATION B2-B2

TYPICAL CABLE TRAY SUPPORT
(SIMILAR TO PP 14 EXCEPT AS NOTED)
SCALE: 1:10

SHEET NOTES:

1. Provide drop out tray fitting.
2. The Contractor shall provide cable tray clamps at each location of tray support.
3. For cable tray support see AS-Sheets.

NOTES:

1. References:
   - For circuit and conduit/cable tray schedules, see sheets starting at E-401.
2. Conduits to cable trays not shown for clarity, see plan drawings.
3. For cable tray supports details, see AS sheets.
4. Cable trays fittings shall be 610 radius.

REQUEST FOR INFORMATION NOT ADDRESSED IN THIS CCO REMAIN IN FORCE

MARK	DATE	DESCRIPTIONS	BY	CH'D	CCO#
0	02/25/08	CABLE TRAY CHANGES	TW	RG SE	42S1

REVISIONS

CONTRACT CHANGE ORDER NO._____
SHEET _____ OF _____

DETAILS
SAS SUPERSTRUCTURE GIRDER EASTBOUND CABLE TRAY AND CONDUIT AT PIER W2W

SCALE AS NOTED

E-212C

THIS PLAN ACCURATE FOR ELECTRICAL WORK ONLY.

ALL DIMENSIONS ARE IN MILLIMETERS UNLESS OTHERWISE SHOWN

FOR REDUCED PLANS ORIGINAL SCALE IS IN MILLIMETERS 0 20 40 60 80

DGN FILE =>T:\13103\MS\pse\SAS Struc\CCO\SAS CCO42S1\CCO 42S1 Final Submittal 2008-07-11\04-0120F1_0235S03.dgn
USERNAME =>llorico | CU 04251 | EA 0120F1

DATE PLOTTED => 7/11/2008
TIME PLOTTED => 2:59:50 PM

LAST REVISION 00-00-00

STATE OF CALIFORNIA - DEPARTMENT OF TRANSPORTATION
Caltrans

DESIGN OVERSIGHT: BEHZAD GOLEMOHAMMADI
CALCULATED/DESIGNED BY | CHECKED BY
DATE | REVISED BY | DATE REVISED

DIST	COUNTY	ROUTE	KILOMETER POST TOTAL PROJECT	SHEET No	TOTAL SHEETS
04	SF	80	13.2/13.9	236 R1	1204

Jens Erlingsson 12/19/02
REGISTERED ELECTRICAL ENGINEER DATE

12-6-04
PLANS APPROVAL DATE

REGISTERED PROFESSIONAL ENGINEER JENS ERLINGSSON No. 8249 Exp. 9/30/06 ELECTRICAL STATE OF CALIFORNIA

PB POWER, Inc.
A Parsons Brinckerhoff Company
303 Second St., Suite 700N
San Francisco, CA 94107-1317

The State of California or its officers or agents shall not be responsible for the accuracy or completeness of electronic copies of this plan sheet.

Caltrans now has a web site! To get to the web site, go to http://www.dot.ca.gov

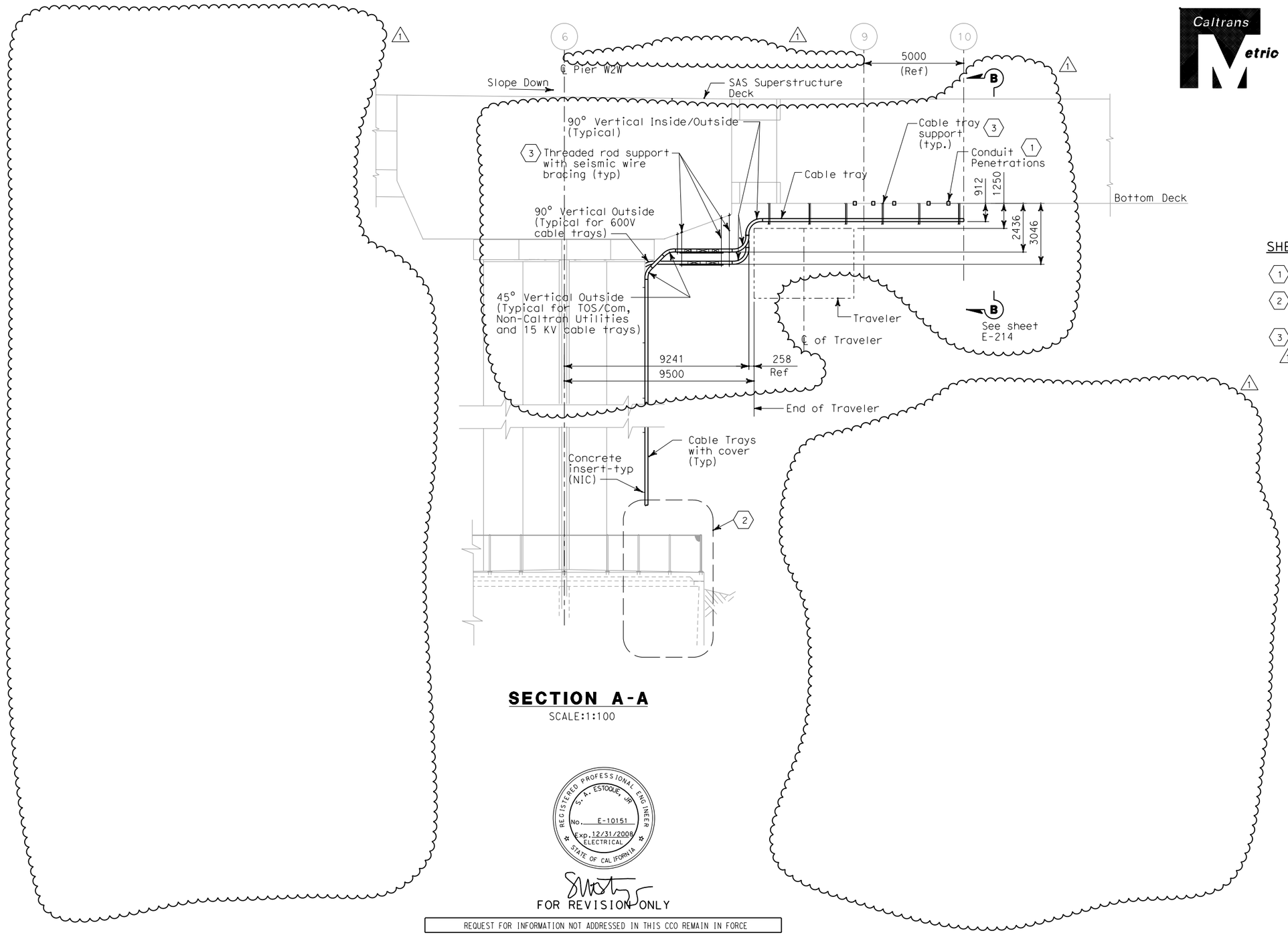

SECTION A-A

SCALE:1:100

SHEET NOTES:

1. See sheet E-212 for location. 1
2. For Pier W2E details, see sheet E-21, E-21E and E-21F. 1
3. For cable tray support type and location, see sheet E-212. 1

REGISTERED PROFESSIONAL ENGINEER S. A. ESTOQUE, JR. No. E-10151 Exp. 12/31/2008 ELECTRICAL STATE OF CALIFORNIA

FOR REVISION ONLY

REQUEST FOR INFORMATION NOT ADDRESSED IN THIS CCO REMAIN IN FORCE

MARK	DATE	DESCRIPTIONS	BY	CH'D	CCO#
1	02/25/08	CABLE TRAY CHANGES	RG	SE	42S1

REVISIONS

CONTRACT CHANGE ORDER NO._____
SHEET _____ OF _____

DETAILS
SAS SUPERSTRUCTURE GIRDER EASTBOUND PIER W2E SECTION AND PLANS

SCALE AS NOTED

E-213

THIS PLAN IS ACCURATE FOR ELECTRICAL WORK ONLY.

ALL DIMENSIONS ARE IN MILLIMETERS UNLESS OTHERWISE SHOWN.

STATE OF CALIFORNIA - DEPARTMENT OF TRANSPORTATION
Caltrans

DESIGN OVERSIGHT: BEHZAD GOLEMOHAMMADI

CALCULATED/DESIGNED BY	EDC	DATE 08/02	REVISED BY	IAH
CHECKED BY	CYF	08/02	DATE REVISED	3/04

FOR REDUCED PLANS ORIGINAL SCALE IS IN MILLIMETERS 0 20 40 60 80

DGN FILE =>T:\13103\MS\pse\SAS Struc\CCO\SAS CC042S1\CCO 42S1 Final Submittal 2008-07-11\04-0120f1_0236R01.dgn
USERNAME =>llorico
CU 04251
EA 0120F1

LAST REVISION 00-00-00
DATE PLOTTED => 7/11/2008
TIME PLOTTED => 3:00:22 PM

DIST	COUNTY	ROUTE	KILOMETER POST TOTAL PROJECT	SHEET No	TOTAL SHEETS
04	SF	80	13.2/13.9	237 R1	1204

Caltrans Metric

REGISTERED ELECTRICAL ENGINEER 12/19/02 DATE

12-6-04
PLANS APPROVAL DATE

REGISTERED PROFESSIONAL ENGINEER JENS ERLINGSSON No. 8249 Exp. 9/30/06 ELECTRICAL STATE OF CALIFORNIA

PB POWER, Inc.
A Parsons Brinckerhoff Company
303 Second St., Suite 700N
San Francisco, CA 94107-1317

The State of California or its officers or agents shall not be responsible for the accuracy or completeness of electronic copies of this plan sheet.

Caltrans now has a web site! To get to the web site, go to http://www.dot.ca.gov

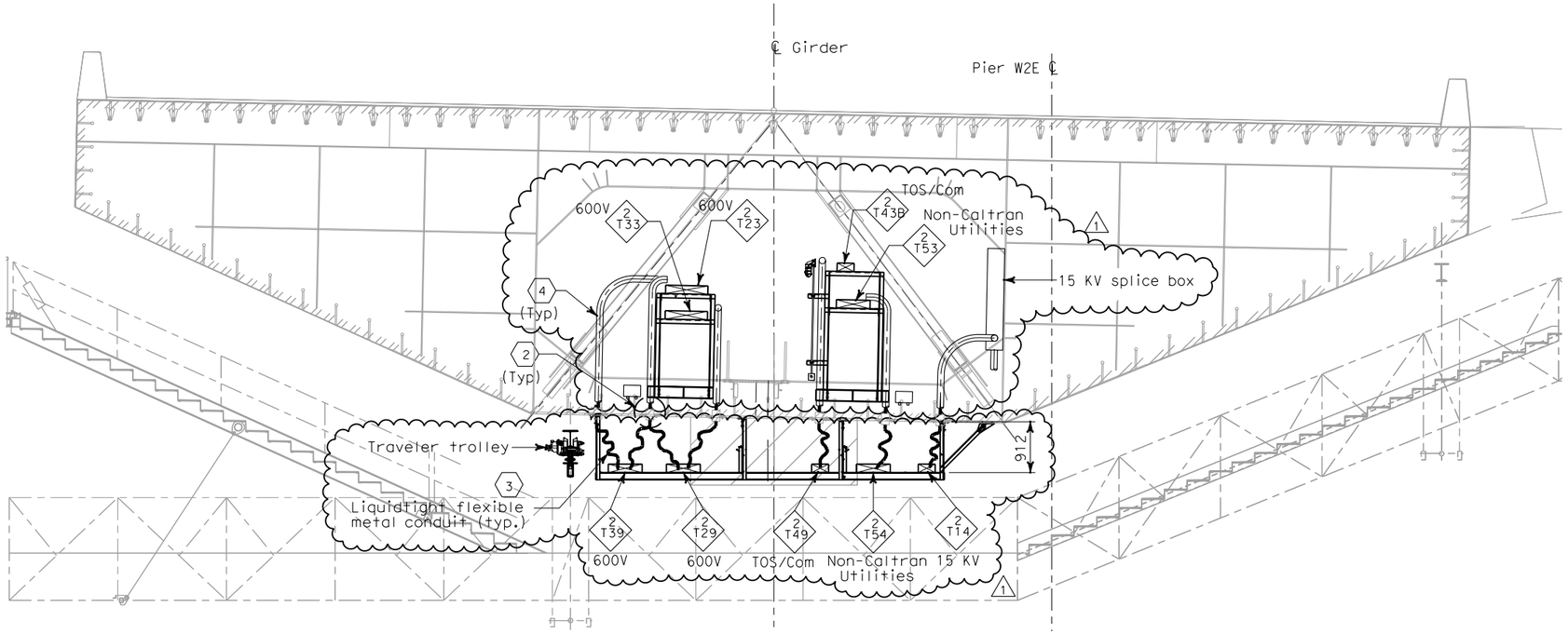

SECTION D-D
SCALE 1:50

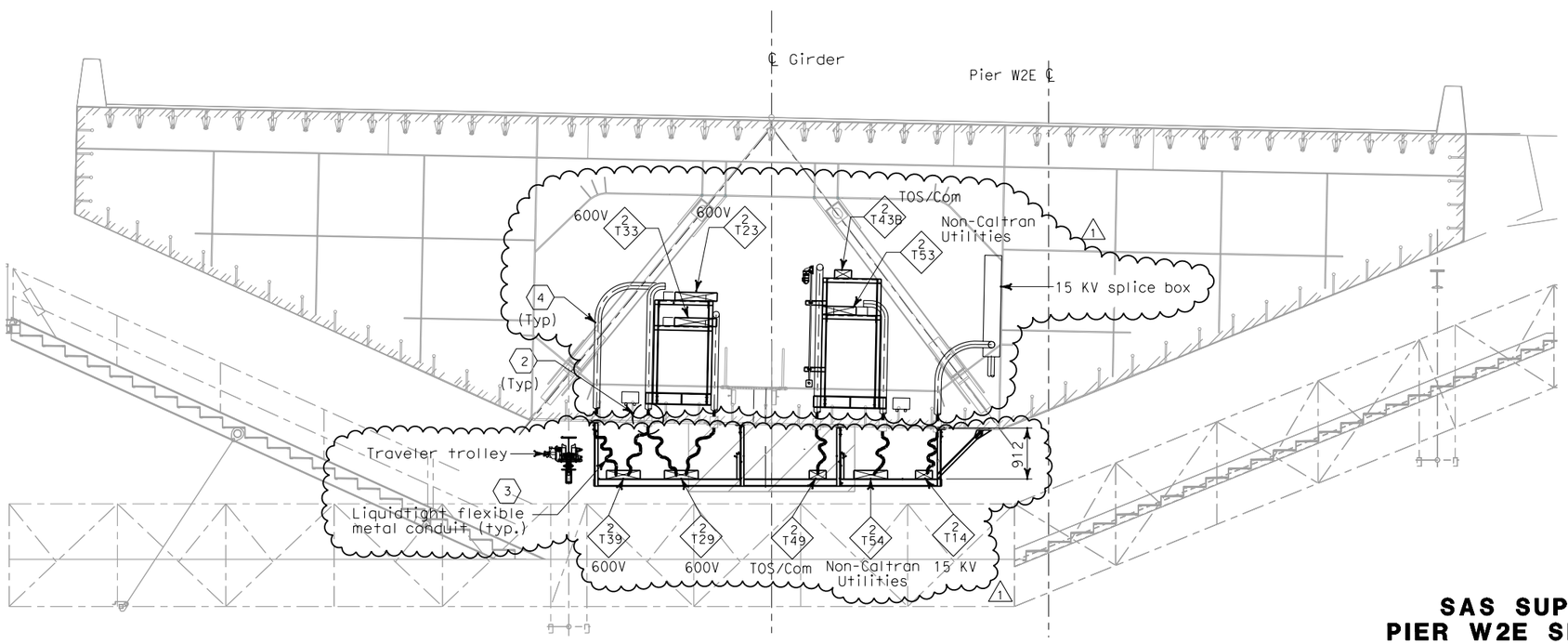

SECTION C-C
SCALE 1:50

SHEET NOTES:

1. For typical below bridge girder cable supports, see AS-sheets.
2. For location of conduit penetrations thru girder plate, see Utility Detail No. 1 and Utility Layout sheets respectively. To prevent moisture from passing inside the sleeve, Contractor shall install sealant after conduit have been installed. Spares shall be plugged and capped.
3. For installation detail of flexible metallic conduits below girder, see sheet E-212.
4. For installation detail of conduits inside girder, see sheet E-212B.

NOTES:

1. References:
   - For typical tray and conduit installation plan at Pier W2W, see sheet E-212.
   - For typical tray and grounding installation details, see sheet E-208.
   - For typical tray and conduit installation details, see sheet E-207.
   - For stanchion mounted light installation detail, see sheet E-206.
   - For girder cable tray supports, see AS-sheets.

REGISTERED PROFESSIONAL ENGINEER S. A. ESTOQUE, JR No. E-10151 Exp. 12/31/2008 ELECTRICAL STATE OF CALIFORNIA

FOR REVISION ONLY

REQUEST FOR INFORMATION NOT ADDRESSED IN THIS CCO REMAIN IN FORCE

MARK	DATE	DESCRIPTIONS	BY	CH'D	CCO#
1	02/25/08	CABLE TRAY CHANGES	RG	SE	42S1

REVISIONS

CONTRACT CHANGE ORDER NO._____
SHEET_____ OF _____

DETAILS
SAS SUPERSTRUCTURE GIRDER EASTBOUND PIER W2E SECTIONS AND TYPICAL PENETRATIONS
SCALE AS NOTED

E-214

THIS PLAN ACCURATE FOR ELECTRICAL WORK ONLY.

ALL DIMENSIONS ARE IN MILLIMETERS UNLESS OTHERWISE SHOWN

FOR REDUCED PLANS ORIGINAL SCALE IS IN MILLIMETERS 0 20 40 60 80

DGN FILE =>T:\13103\MS\pse\SAS Struc\CCO\SAS CCO42S1\CCO 42S1 Final Submittal 2008-07-11\04-0120f1_0237R01.dgn
USERNAME =>llorico
CU 04251
EA 0120F1

DATE PLOTTED => 7/11/2008
TIME PLOTTED => 3:00:40 PM
LAST REVISION 00-00-00

STATE OF CALIFORNIA - DEPARTMENT OF TRANSPORTATION
Caltrans

DESIGN OVERSIGHT
BEHZAD GOLEMOHAMMADI

CALCULATED/DESIGNED BY EDC DATE 08/02 REVISED BY IAH
CHECKED BY CYF 08/02 DATE REVISED 3/04

DIST	COUNTY	ROUTE	KILOMETER POST TOTAL PROJECT	SHEET No	TOTAL SHEETS
04	SF	80	13.2/13.9	237 S1	1204

REGISTERED ELECTRICAL ENGINEER 2/22/08 DATE

PLANS APPROVAL DATE

REGISTERED PROFESSIONAL ENGINEER S. A. ESTOQUE, JR No. E-10151 Exp. 12/31/2008 ELECTRICAL STATE OF CALIFORNIA

PB AMERICAS, Inc.
A Parsons Brinckerhoff Company
303 Second St., Suite 700N
San Francisco, CA 94107-1317

The State of California or its officers or agents shall not be responsible for the accuracy or completeness of electronic copies of this plan sheet.

Caltrans now has a web site! To get to the web site, go to http://www.dot.ca.gov

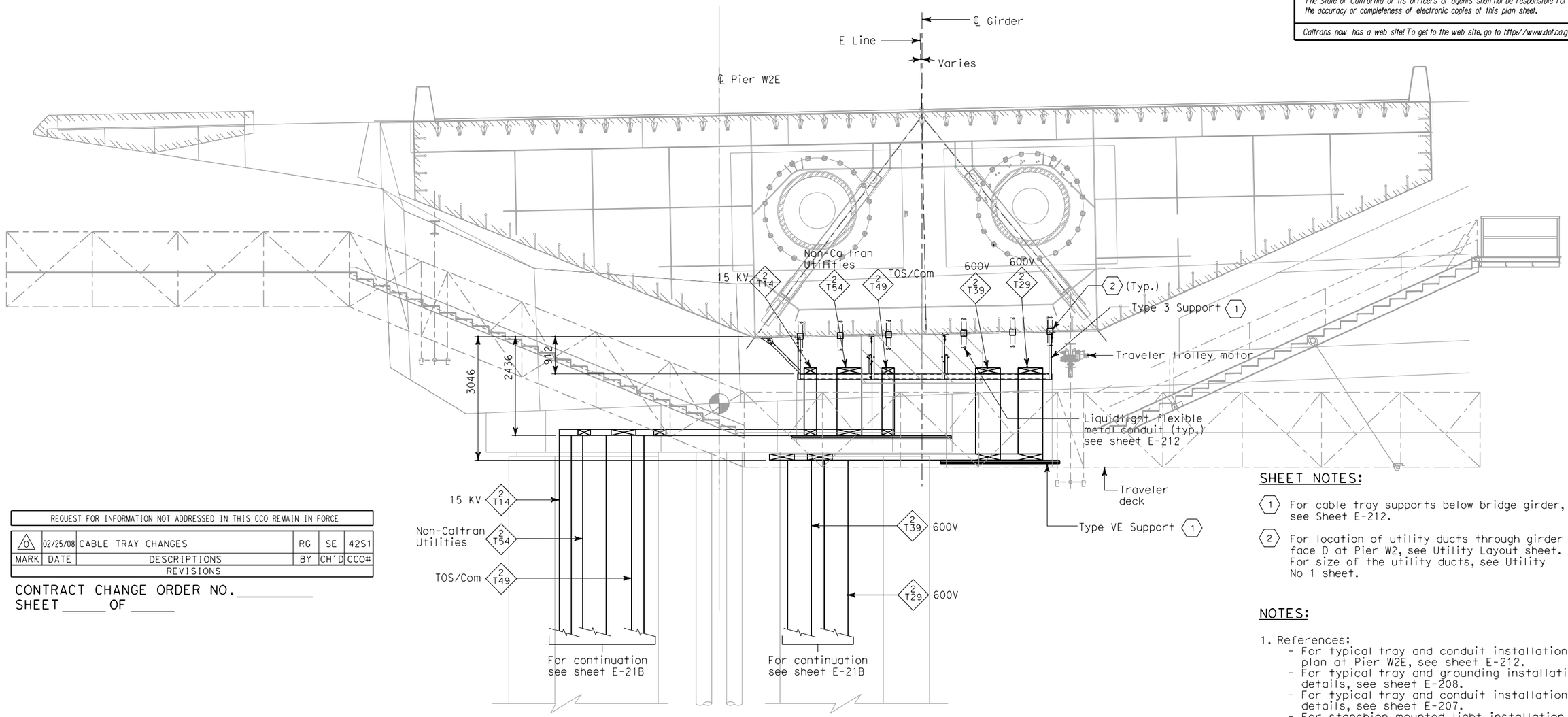

SECTION B-B

SCALE 1:50

REQUEST FOR INFORMATION NOT ADDRESSED IN THIS CCO REMAIN IN FORCE

MARK	DATE	DESCRIPTIONS	BY	CH'D	CCO#
0	02/25/08	CABLE TRAY CHANGES	RG	SE	42S1

REVISIONS

CONTRACT CHANGE ORDER NO._____
SHEET _____ OF _____

SHEET NOTES:

1. For cable tray supports below bridge girder, see Sheet E-212.
2. For location of utility ducts through girder face D at Pier W2, see Utility Layout sheet. For size of the utility ducts, see Utility No 1 sheet.

NOTES:

1. References:
   - For typical tray and conduit installation plan at Pier W2E, see sheet E-212.
   - For typical tray and grounding installation details, see sheet E-208.
   - For typical tray and conduit installation details, see sheet E-207.
   - For stanchion mounted light installation detail, see sheet E-206.
   - For girder cable tray supports, see AS - sheets.

DETAILS
SAS SUPERSTRUCTURE GIRDER EASTBOUND PIER W2E SECTIONS AND TYPICAL PENETRATIONS

SCALE AS NOTED

E-214A

STATE OF CALIFORNIA - DEPARTMENT OF TRANSPORTATION
Caltrans

DESIGN OVERSIGHT: BEHZAD GOLEMOHAMMADI
CALCULATED/DESIGNED BY: RG | DATE | REVISED BY
CHECKED BY: SE | DATE REVISED

THIS PLAN ACCURATE FOR ELECTRICAL WORK ONLY.

ALL DIMENSIONS ARE IN MILLIMETERS UNLESS OTHERWISE SHOWN

FOR REDUCED PLANS ORIGINAL SCALE IS IN MILLIMETERS 0 20 40 60 80

DGN FILE =>T:\13103\MS\pse\SAS Struc\CCO\SAS CCO42S1\CCO 42S1 Final Submittal 2008-07-11\04-0120f1_0237S01.dgn
USERNAME =>llorico
CU 04251 EA 0120F1

LAST REVISION 00-00-00
DATE PLOTTED => 7/11/2008
TIME PLOTTED => 3:01:03 PM

NOTE:

1. References:
   - For SAS Superstructure Girder Eastbound plan, see sheet E-186.
   - For SAS Superstructure Girder Eastbound typical section, see sheet E-207.

SHEET NOTES:

(1) For utility opening detail, see structural sheets.

(2) For Type I cable tray support structure, see AS-sheets.

(3) For Type VIII cable tray support structure, see AS-sheets.

(4) For Type IX cable tray support structure, see AS-sheets.

(5) For Type II Cable Tray Support Structure, see AS-sheets. (Omit bottom rung).

(6) For Type X Cable Tray Support Structure, see AS-sheets.

(7) Deleted.

(8) Deleted.

(9) Type VIII support with the exception of angle steel bracket oriented as shown on Detail 1. For Details, see AS-sheets.

(10) For Type XI cable tray support structure, see AS-sheets.

(11) For cable tray support see drawing AS-16Q.

(12) Install grommet of neoprene rubber or similar materials to protect cable insulation from sharp metallic edges.

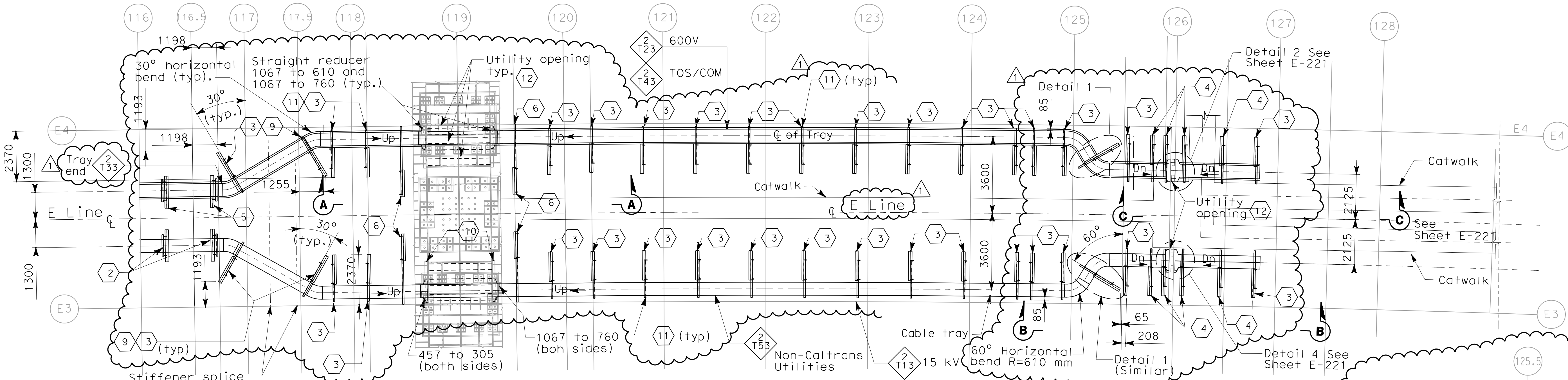

PARTIAL PLAN
SCALE 1:100

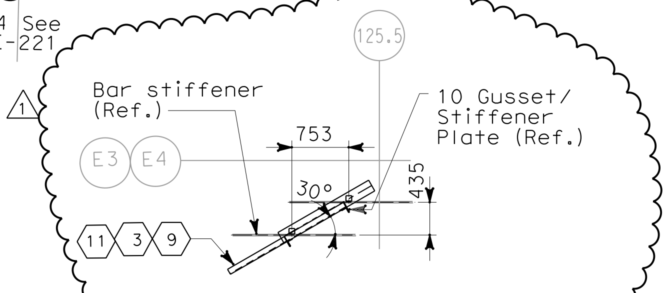

DETAIL 1
SCALE 1:100

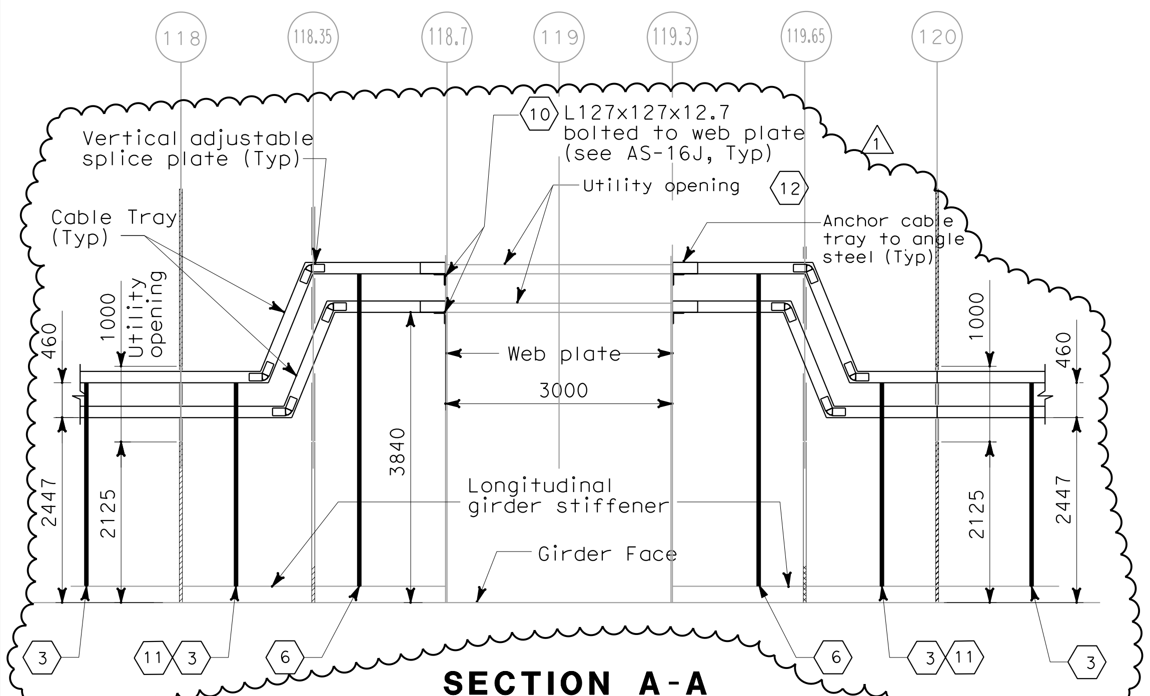

SECTION A-A
SCALE 1:50

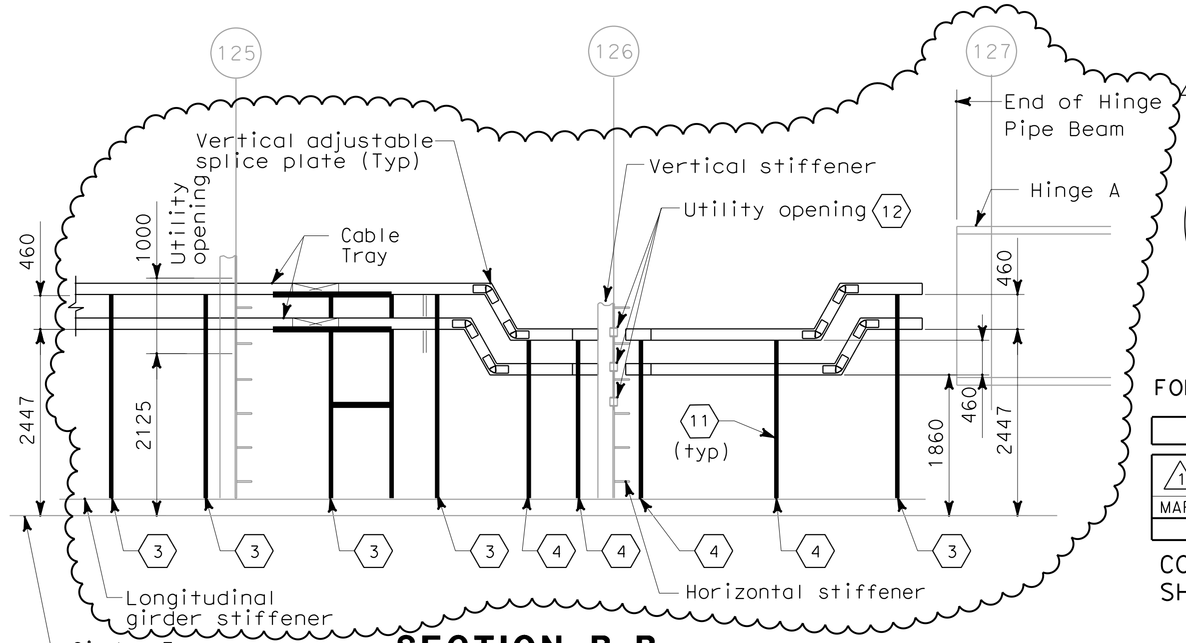

SECTION B-B
SCALE 1:50

DIST	COUNTY	ROUTE	KILOMETER POST TOTAL PROJECT	SHEET No	TOTAL SHEETS
04	SF	80	13.2/13.9	239 R1	1204

REGISTERED ELECTRICAL ENGINEER 12/19/02 DATE

12-6-04
PLANS APPROVAL DATE

REGISTERED PROFESSIONAL ENGINEER JENS ERLINGSSON No. 8249 Exp. 9/30/06 ELECTRICAL STATE OF CALIFORNIA

PB POWER, Inc.
A Parsons Brinckerhoff Company
303 Second St., Suite 700N
San Francisco, CA 94107-1317

The State of California or its officers or agents shall not be responsible for the accuracy or completeness of electronic copies of this plan sheet.

Caltrans now has a web site! To get to the web site, go to http://www.dot.ca.gov

Caltrans Metric

REGISTERED PROFESSIONAL ENGINEER S. A. ESTOQUE, JR No. E-10151 Exp. 12/31/2008 ELECTRICAL STATE OF CALIFORNIA

FOR REVISION ONLY

REQUEST FOR INFORMATION NOT ADDRESSED IN THIS CCO REMAIN IN FORCE

MARK	DATE	DESCRIPTIONS	BY	CH'D	CCO#
1	02/25/08	CABLE TRAY CHANGES	TW	RG SE	42S1

REVISIONS

CONTRACT CHANGE ORDER NO.______
SHEET _____ OF _____

DETAILS
SAS SUPERSTRUCTURE GIRDER EASTBOUND
HINGE AE
SCALE AS NOTED

E-220

DESIGN OVERSIGHT	BEHZAD GOLEMOHAMMADI
CALCULATED/ DESIGNED BY	EDC
DATE	08/02
CHECKED BY	CYF
DATE	08/02
REVISED BY	IAH
DATE REVISED	3/04

STATE OF CALIFORNIA - DEPARTMENT OF TRANSPORTATION
Caltrans

THIS PLAN ACCURATE FOR ELECTRICAL WORK ONLY.

ALL DIMENSIONS ARE IN MILLIMETERS UNLESS OTHERWISE SHOWN

FOR REDUCED PLANS ORIGINAL SCALE IS IN MILLIMETERS 0 20 40 60 80

DGN FILE =>T:\13103\MS\pse\SAS Struc\CCO\SAS CCO42S1\CCO 42S1 Final Submittal 2008-07-11\04-0120f1_0239R01.dgn
USERNAME =>llorico

CU 04251 EA 0120F1

LAST REVISION 00-00-00
DATE PLOTTED => 7/11/2008
TIME PLOTTED => 3:01:19 PM

DIST	COUNTY	ROUTE	KILOMETER POST TOTAL PROJECT	SHEET No	TOTAL SHEETS
04	SF	80	13.2/13.9	240 R1	1204

Caltrans Metric

REGISTERED ELECTRICAL ENGINEER 12/19/02 DATE

12-6-04
PLANS APPROVAL DATE

PB POWER, Inc.
A Parsons Brinckerhoff Company
303 Second St., Suite 700N
San Francisco, CA 94107-1317

REGISTERED PROFESSIONAL ENGINEER JENS ERLINGSSON No. 8249 Exp. 9/30/06 ELECTRICAL STATE OF CALIFORNIA

The State of California or its officers or agents shall not be responsible for the accuracy or completeness of electronic copies of this plan sheet.

Caltrans now has a web site! To get to the web site, go to http://www.dot.ca.gov

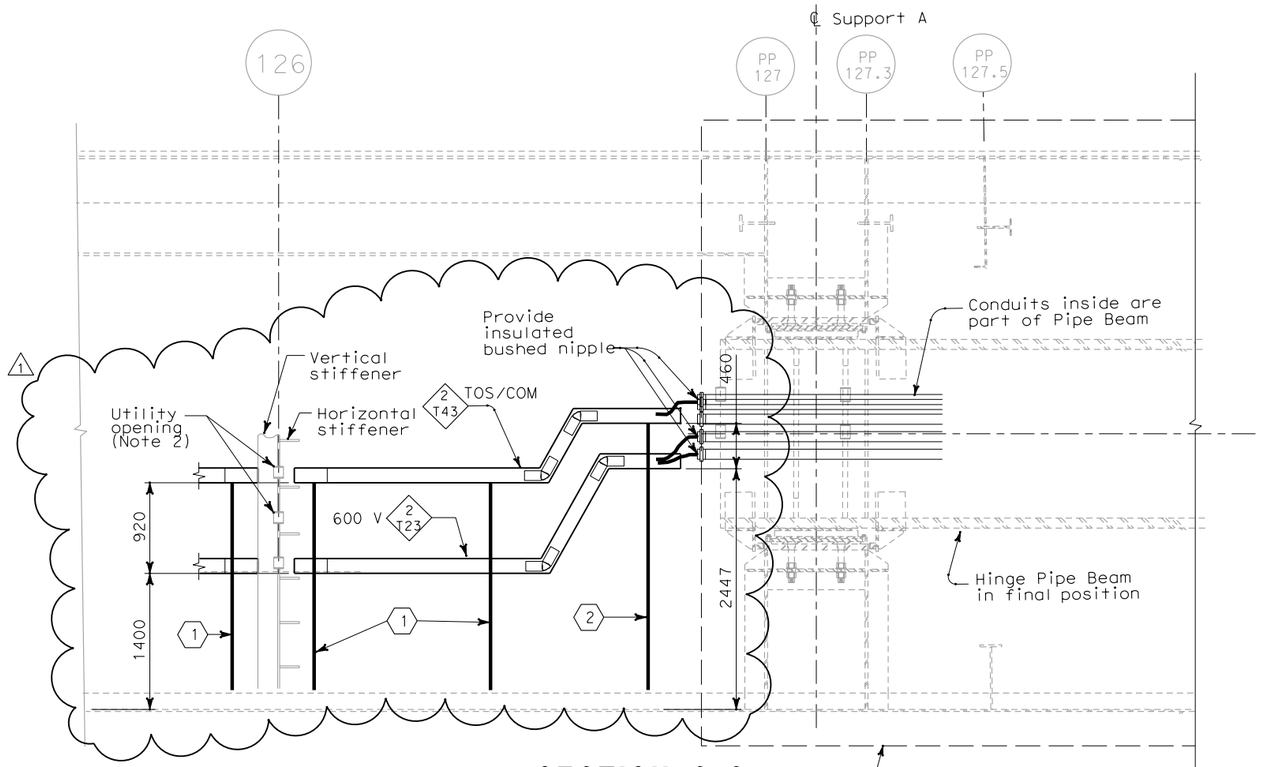

SECTION C-C
(SEE SHEET E-220)
SCALE 1:30

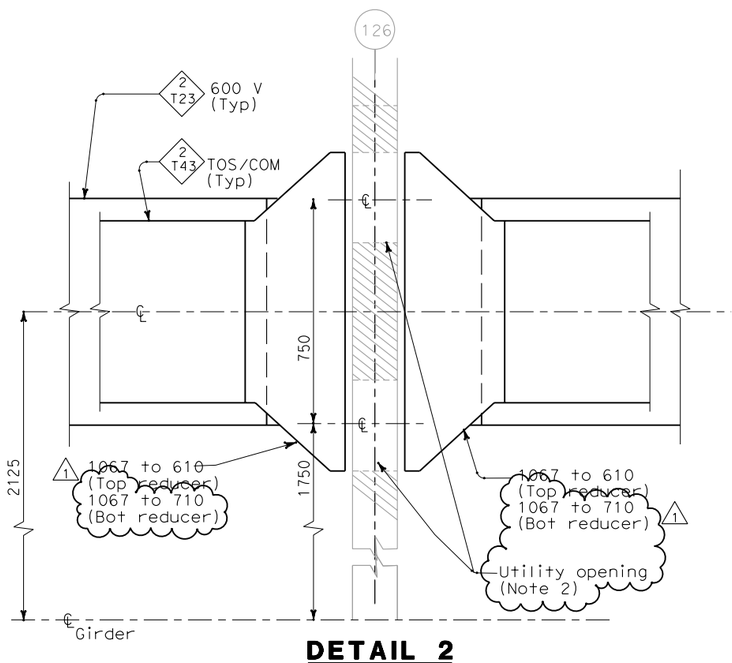

DETAIL 2
(SEE SHEET E-220)
SCALE 1:10

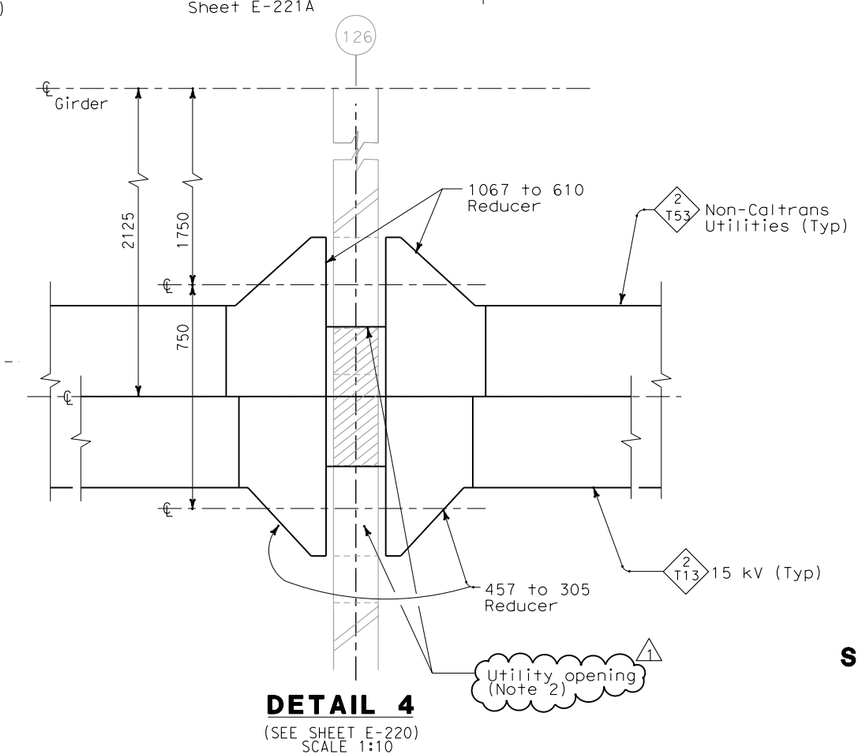

DETAIL 4
(SEE SHEET E-220)
SCALE 1:10

NOTES:

1. For utility opening details at panel point 126, see Structural sheets.
2. Install grommet of neoprene rubber or similar materials to protect cable insulation from sharp metallic edges.

SHEET NOTES:

1. For Type IX cable tray support structure, see AS-15.
2. For Type VIII cable tray support structure, see AS-15.

REGISTERED PROFESSIONAL ENGINEER S. A. ESTOQUE, JR No. E-10151 Exp. 12/31/2008 ELECTRICAL STATE OF CALIFORNIA

FOR REVISION ONLY

REQUEST FOR INFORMATION NOT ADDRESSED IN THIS CCO REMAIN IN FORCE

MARK	DATE	DESCRIPTIONS	BY	CH'D	CCO#
1	02/25/08	CABLE TRAY CHANGES	MP	RG SE	42S1

REVISIONS

CONTRACT CHANGE ORDER NO._____
SHEET _____ OF _____

DETAILS
SAS SUPERSTRUCTURE GIRDER EASTBOUND HINGE AE
SCALE AS NOTED

E-221

THIS PLAN ACCURATE FOR ELECTRICAL WORK ONLY.

ALL DIMENSIONS ARE IN MILLIMETERS UNLESS OTHERWISE SHOWN

FOR REDUCED PLANS ORIGINAL SCALE IS IN MILLIMETERS 0 20 40 60 80

DGN FILE =>T:\13103\MS\pse\SAS Struc\CCO\SAS CCO42S1\CCO 42S1 Final Submittal 2008-07-11\04-0120f1_0240R01.dgn
USERNAME =>llorico
CU 04251
EA 0120F1

STATE OF CALIFORNIA - DEPARTMENT OF TRANSPORTATION
Caltrans

DESIGN OVERSIGHT
BEHZAD GOLEMOHAMMADI

CALCULATED/ DESIGNED BY	EDC	DATE 08/02	REVISED BY	IAH
CHECKED BY	CYF	08/02	DATE REVISED	3/04

LAST REVISION 00-00-00
DATE PLOTTED => 7/11/2008
TIME PLOTTED => 3:01:43 PM

DIST	COUNTY	ROUTE	KILOMETER POST TOTAL PROJECT	SHEET No	TOTAL SHEETS
04	SF	80	13.2/13.9	243 R1	1204

Caltrans Metric

REGISTERED ELECTRICAL ENGINEER 2/6/04 DATE

12-6-04
PLANS APPROVAL DATE

PB POWER, Inc.
A Parsons Brinckerhoff Company
303 Second St., Suite 700N
San Francisco, CA 94107-1317

REGISTERED PROFESSIONAL ENGINEER JENS ERLINGSSON No. 8249 Exp. 9/30/06 ELECTRICAL STATE OF CALIFORNIA

The State of California or its officers or agents shall not be responsible for the accuracy or completeness of electronic copies of this plan sheet.

Caltrans now has a web site! To get to the web site, go to http://www.dot.ca.gov

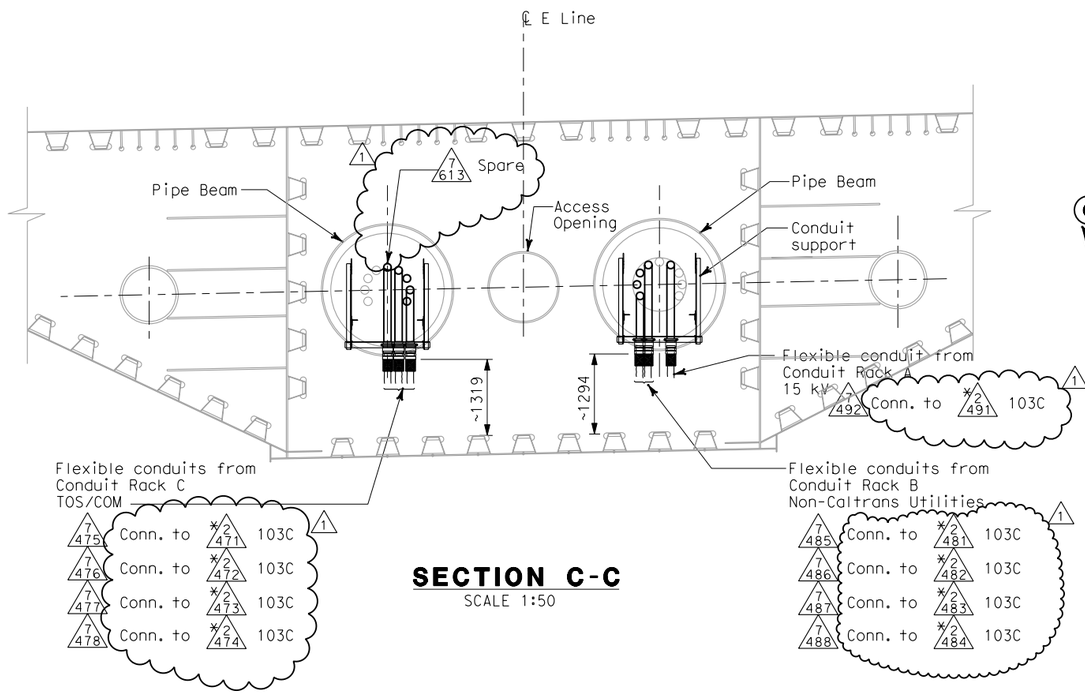

SECTION C-C
SCALE 1:50

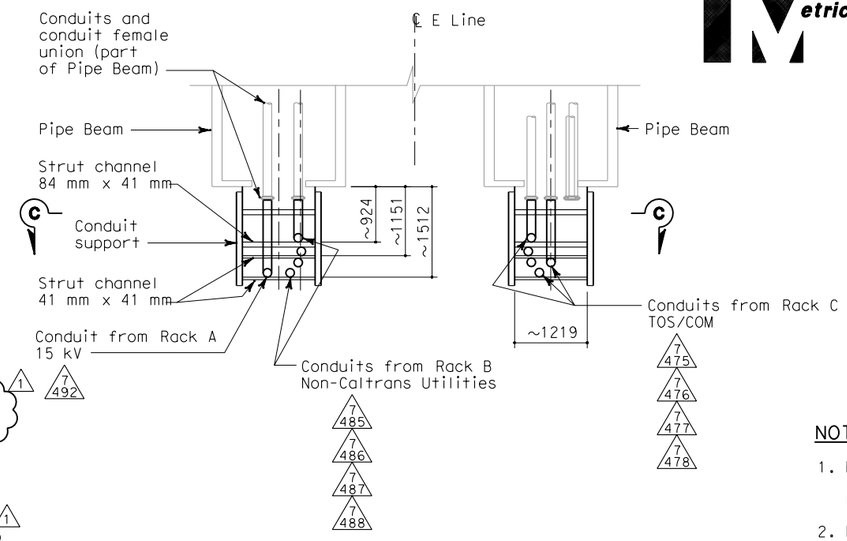

PLAN - DETAIL 1
SCALE 1:50

NOTES:

1. Materials, hardware and fittings shall be galvanized or stainless steel. For additional requirements, see Electrical Special Provisions.
2. References:
   - For Westbound plans and sections, see sheets E-186A and E-221A.
3. Existing conduits (*) inside pipe beam are supplied in Skyway contract.

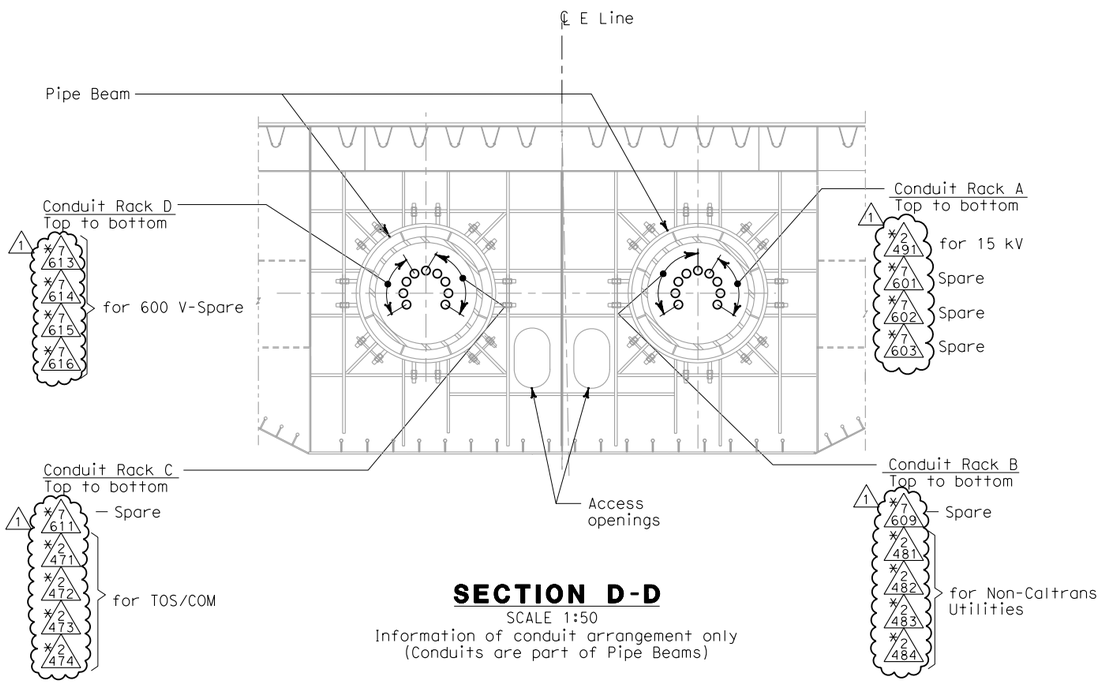

SECTION D-D
SCALE 1:50
Information of conduit arrangement only
(Conduits are part of Pipe Beams)

REGISTERED PROFESSIONAL ENGINEER S. A. ESTOQUE, JR No. E-10151 Exp. 12/31/2008 ELECTRICAL STATE OF CALIFORNIA

FOR REVISION ONLY

REQUEST FOR INFORMATION NOT ADDRESSED IN THIS CCO REMAIN IN FORCE

MARK	DATE	DESCRIPTIONS	BY	CH'D	CCO#
1	02/25/08	CABLE TRAY CHANGES	JD	RG SE	42S1

REVISIONS

CONTRACT CHANGE ORDER NO._____
SHEET _____ OF _____

DETAILS
SAS SUPERSTRUCTURE AND SKYWAY STRUCTURE GIRDER INTERFACE EASTBOUND HINGE AE SUPPORTS
SCALE AS NOTED

E-221C

STATE OF CALIFORNIA - DEPARTMENT OF TRANSPORTATION
Caltrans

DESIGN OVERSIGHT: BEHZAD GOLEMOHAMMADI

CALCULATED/DESIGNED BY: CYF | DATE 12/03 | REVISED BY: EJL
CHECKED BY: EJL | 1/04 | DATE REVISED: 2/04

THIS PLAN ACCURATE FOR ELECTRICAL WORK ONLY.

ALL DIMENSIONS ARE IN MILLIMETERS UNLESS OTHERWISE SHOWN

FOR REDUCED PLANS ORIGINAL SCALE IS IN MILLIMETERS 0 20 40 60 80

DGN FILE =>T:\13103\MS\pse\SAS Struc\CCO\SAS CC042S1\CCO 42S1 Final Submittal 2008-07-11\04-0120f1_0243R01.dgn
USERNAME =>llorico
CU 04251 EA 0120F1

LAST REVISION 00-00-00
DATE PLOTTED => 7/11/2008
TIME PLOTTED => 3:02:01 PM

DIST	COUNTY	ROUTE	KILOMETER POST TOTAL PROJECT	SHEET No	TOTAL SHEETS
04	SF	80	13.2/13.9	271 R2	1204

REGISTERED ELECTRICAL ENGINEER 12/19/02 DATE

12-6-04
PLANS APPROVAL DATE

PB POWER, Inc.
A Parsons Brinckerhoff Company
303 Second St., Suite 700N
San Francisco, CA 94107-1317

REGISTERED PROFESSIONAL ENGINEER JENS ERLINGSSON No. 8249 Exp. 9/30/06 ELECTRICAL STATE OF CALIFORNIA

The State of California or its officers or agents shall not be responsible for the accuracy or completeness of electronic copies of this plan sheet.

Caltrans now has a web site! To get to the web site, go to http://www.dot.ca.gov

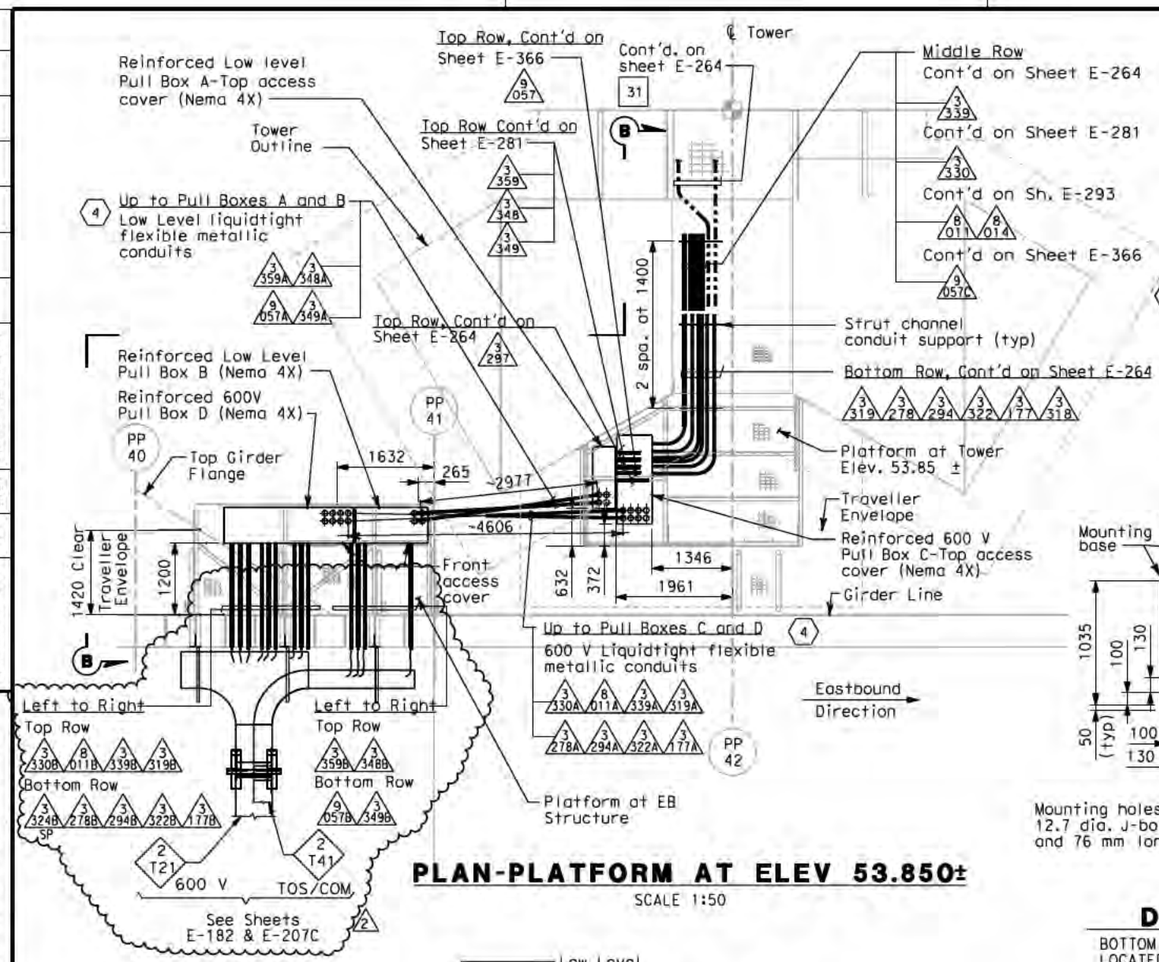

PLAN-PLATFORM AT ELEV 53.850±

SCALE 1:50

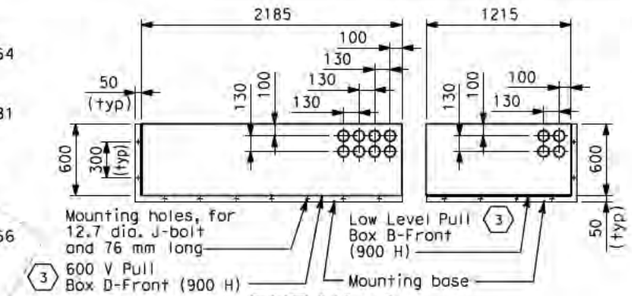

DETAIL 1

BOTTOM PLAN OF PULL BOXES LOCATED AT EB STRUCTURE PLATFORM
SCALE 1:25

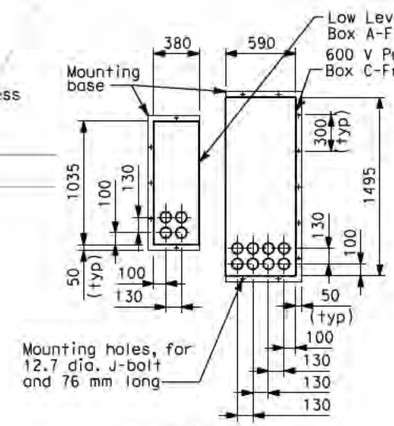

DETAIL 2

BOTTOM PLAN OF PULL BOXES LOCATED AT TOWER PLATFORM
SCALE 1:25

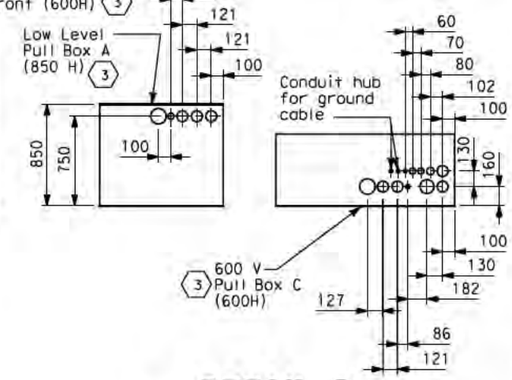

DETAIL 3

FRONT ELEVATION OF PULL BOXES LOCATED AT TOWER PLATFORM
SCALE 1:25

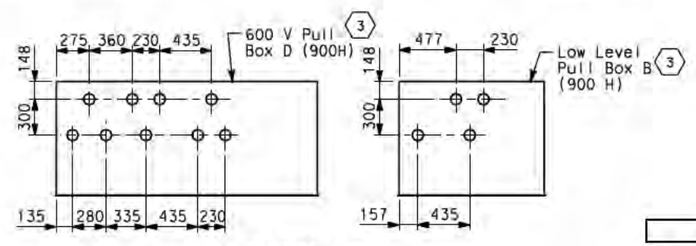

DETAIL 4

FRONT ELEVATION OF PULL BOXES LOCATED AT EB STRUCTURE PLATFORM
SCALE 1:25

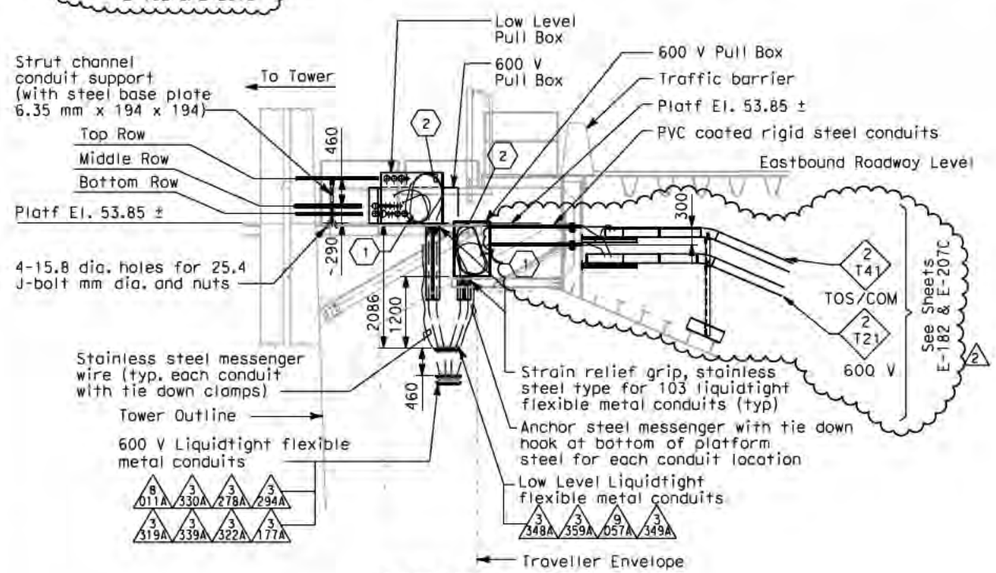

SECTION B

SCALE 1:50

SHEET NOTES

1. Coil 3 meters long of cable for each circuits inside the pull boxes.
2. Provide hooked cable support grips for cable or groups of cables at each liquidtight flexible metallic conduit inside the pull box.
3. Pull Box shall be fabricated of Nema 4X stainless steel, type 304. Pull Box shall be of reinforced construction to provide vertical support at bottom side of box for weighted conduit and cables inside. The top side of the Pull Box shall be reinforced and provided with hooks for cable support grips inside the pull box.
4. Electrical conduit design between Eastbound Structure and Main Tower is based on the maximum expansion of 1000 mm all directions.

NOTES

1. For location of sleeves Eastbound Structure PP-40 and PP-41, see Structural Plans.
2. Each liquidtight flexible metallic conduit shall be provided with #6 green insulated ground conductor outside the conduit.

REGISTERED PROFESSIONAL ENGINEER S. A. ESTOQUE, JR. No. E-10151 Exp. 12/31/2008 ELECTRICAL STATE OF CALIFORNIA

FOR REVISION ONLY

REQUEST FOR INFORMATION NOT ADDRESSED IN THIS CCO REMAIN IN FORCE

MARK	DATE	DESCRIPTIONS	BY	CH'D	CCO#
2	02/25/08	CABLE TRAY CHANGES	MP	RG SE	42S1
1	02/19/08	ELECTRICAL MODIFICATIONS	MP EL	RR	42

REVISIONS

CONTRACT CHANGE ORDER NO._____
SHEET_____ OF _____

DETAILS
TOWER AND SUSPENSION CABLE

SCALE: AS NOTED

E-264A

THIS PLAN ACCURATE FOR ELECTRICAL WORK ONLY.

ALL DIMENSIONS ARE IN MILLIMETERS UNLESS OTHERWISE SHOWN.

STATE OF CALIFORNIA - DEPARTMENT OF TRANSPORTATION
Caltrans

DESIGN OVERSIGHT: BEHZAD GOLEMOHAMMADI

CALCULATED/DESIGNED BY: EJL | CHECKED BY: JE | DATE 3/04 | REVISED BY | DATE REVISED

FOR REDUCED PLANS ORIGINAL SCALE IS IN MILLIMETERS 0 20 40 60 80

DGN FILE =>T:\13103\MS\pse\SAS Struc\CCO\SAS CCO42S1\CCO 42S1 Final Submittal 2008-07-11\04-0120f1_0271R02.dgn
USERNAME =>llorico

CU 04251 | EA 0120F1

LAST REVISION 00-00-00 | DATE PLOTTED => 7/11/2008 | TIME PLOTTED => 3:02:32 PM

DIST	COUNTY	ROUTE	KILOMETER POST TOTAL PROJECT	SHEET No	TOTAL SHEETS
04	SF	80	13.2/13.9	357 S1	1204

REGISTERED ELECTRICAL ENGINEER 2/22/08 DATE

PLANS APPROVAL DATE

REGISTERED PROFESSIONAL ENGINEER S. A. ESTOQUE, JR. No. E-10151 Exp. 12/31/2008 ELECTRICAL STATE OF CALIFORNIA

PB AMERICAS, Inc.
A Parsons Brinckerhoff Company
303 Second St., Suite 700N
San Francisco, CA 94107-1317

The State of California or its officers or agents shall not be responsible for the accuracy or completeness of electronic copies of this plan sheet.

Caltrans now has a web site! To get to the web site, go to http://www.dot.ca.gov

Caltrans Metric

REQUEST FOR INFORMATION NOT ADDRESSED IN THIS CCO REMAIN IN FORCE

MARK	DATE	DESCRIPTIONS	BY	CH'D	CCO#
0	02/25/08	CABLE TRAY CHANGES	RR TW	RG	42S1

REVISIONS

CONTRACT CHANGE ORDER NO._____
SHEET _____ OF _____

CONDUIT DATA

Conduit No	Reference	Size	Type	Total Fill (mm²)	Allowable Fill (mm²)	Included Cable No.	Conductor Type
0700	E-20, E20B	103	Liquidtight flex metal conduit		3275.44	Pull rope	Soft-Fiber Polyester
0701	E-20, E20B	103	Liquidtight flex metal conduit		3275.44	Pull rope	Soft-Fiber Polyester
0702	E-20, E20B	103	Liquidtight flex metal conduit		3275.44	Pull rope	Soft-Fiber Polyester
0703	E-20, E20B	103	Liquidtight flex metal conduit		3275.44	Pull rope	Soft-Fiber Polyester
0704	E-20, E20B	103	Liquidtight flex metal conduit		3275.44	Pull rope	Soft-Fiber Polyester
0705	E-20, E20B	103	Liquidtight flex metal conduit		3275.44	Pull rope	Soft-Fiber Polyester
0706	E-20, E20B	103	Liquidtight flex metal conduit		3275.44	Pull rope	Soft-Fiber Polyester
0707	E-20, E20B	103	Liquidtight flex metal conduit		3275.44	Pull rope	Soft-Fiber Polyester
0708	E-20, E20B	103	Liquidtight flex metal conduit		3275.44	Pull rope	Soft-Fiber Polyester
0709	E-20, E20B	103	Liquidtight flex metal conduit		3275.44	Pull rope	Soft-Fiber Polyester
0710	E-20, E20B	103	Liquidtight flex metal conduit		3275.44	Pull rope	Soft-Fiber Polyester
0711	E-20, E20B	103	Liquidtight flex metal conduit		3275.44	Pull rope	Soft-Fiber Polyester
0712	E-20, E20B	103	Liquidtight flex metal conduit		3275.44	Pull rope	Soft-Fiber Polyester
0713	E-20, E20B	103	Liquidtight flex metal conduit		3275.44	Pull rope	Soft-Fiber Polyester
0714	E-20, E20B	103	Liquidtight flex metal conduit		3275.44	Pull rope	Soft-Fiber Polyester
0715	E-20, E20B	103	Liquidtight flex metal conduit		3275.44	Pull rope	Soft-Fiber Polyester
0716	E-20, E20B	103	Liquidtight flex metal conduit		3275.44	Pull rope	Soft-Fiber Polyester
0717	E-20, E20B	103	Liquidtight flex metal conduit		3275.44	Pull rope	Soft-Fiber Polyester
0718	E-20, E20B	103	Liquidtight flex metal conduit		3275.44	Pull rope	Soft-Fiber Polyester
0719	E-20, E20B	103	Liquidtight flex metal conduit		3275.44	Pull rope	Soft-Fiber Polyester
0720	E-20, E20B	103	Liquidtight flex metal conduit		3275.44	Pull rope	Soft-Fiber Polyester
0721A	E-126A	103	RGS Conduit (Pipe Sleeve)		3324.51	Pull rope	Soft-Fiber Polyester
0722A	E-126A	103	RGS Conduit (Pipe Sleeve)		3324.51	Pull rope	Soft-Fiber Polyester
0722B	E-126A	103	RGS Conduit (Pipe Sleeve)		3324.51	Pull rope	Soft-Fiber Polyester
0722C	E-126A	103	RGS Conduit (Pipe Sleeve)		3324.51	Pull rope	Soft-Fiber Polyester
0722D	E-126A	103	RGS Conduit (Pipe Sleeve)		3324.51	Pull rope	Soft-Fiber Polyester
0723A	E-126A	103	RGS Conduit (Pipe Sleeve)		3324.51	Pull rope	Soft-Fiber Polyester
0723B	E-126A	103	RGS Conduit (Pipe Sleeve)		3324.51	Pull rope	Soft-Fiber Polyester
0723C	E-126A	103	RGS Conduit (Pipe Sleeve)		3324.51	Pull rope	Soft-Fiber Polyester
0723D	E-126A	103	RGS Conduit (Pipe Sleeve)		3324.51	Pull rope	Soft-Fiber Polyester

CONDUIT DATA

Conduit No	Reference	Size	Type	Total Fill (mm²)	Allowable Fill (mm²)	Included Cable No.	Conductor Type
0724A	E-126A	103	RGS Conduit (Pipe Sleeve)		3324.51	Pull rope	Soft-Fiber Polyester
0724B	E-126A	103	RGS Conduit (Pipe Sleeve)		3324.51	Pull rope	Soft-Fiber Polyester
0724C	E-126A	103	RGS Conduit (Pipe Sleeve)		3324.51	Pull rope	Soft-Fiber Polyester
0724D	E-126A	103	RGS Conduit (Pipe Sleeve)		3324.51	Pull rope	Soft-Fiber Polyester
0724E	E-126A	103	RGS Conduit (Pipe Sleeve)		3324.51	Pull rope	Soft-Fiber Polyester
0724F	E-126A	103	RGS Conduit (Pipe Sleeve)		3324.51	Pull rope	Soft-Fiber Polyester

CONDUIT AND TRAY SCHEDULE

E-402A

DESIGN OVERSIGHT
BEHZAD GOLEMOHAMMADI

CALCULATED/DESIGNED BY
CHECKED BY

DATE REVISED BY
DATE REVISED

STATE OF CALIFORNIA - DEPARTMENT OF TRANSPORTATION
Caltrans

LAST REVISION 00-00-00
DATE PLOTTED => 7/11/2008
TIME PLOTTED => 3:02:51 PM

FOR REDUCED PLANS ORIGINAL SCALE IS IN MILLIMETERS 0 20 40 60 80

DGN FILE =>T:\13103\MS\pse\SAS Struc\CCO\SAS CCO42S1\CCO 42S1 Final Submittal 2008-07-11\04-0120f1_035 7S01.dgn
USERNAME =>llorico

CU 04251 EA 0120F1

DIST	COUNTY	ROUTE	KILOMETER POST TOTAL PROJECT	SHEET No	TOTAL SHEETS
04	SF	80	13.2/13.9	357 S2	1204

REGISTERED ELECTRICAL ENGINEER 2/22/08 DATE

PLANS APPROVAL DATE

REGISTERED PROFESSIONAL ENGINEER S. A. ESTOQUE, JR. No. E-10151 Exp. 12/31/2008 ELECTRICAL STATE OF CALIFORNIA

PB AMERICAS, Inc.
A Parsons Brinckerhoff Company
303 Second St., Suite 700N
San Francisco, CA 94107-1317

The State of California or its officers or agents shall not be responsible for the accuracy or completeness of electronic copies of this plan sheet.

Caltrans now has a web site! To get to the web site, go to http://www.dot.ca.gov

Caltrans Metric

REQUEST FOR INFORMATION NOT ADDRESSED IN THIS CCO REMAIN IN FORCE

MARK	DATE	DESCRIPTIONS	BY	CH'D	CCO#
0	02/25/08	CABLE TRAY CHANGES	RR TW	RG	42S1

REVISIONS

CONTRACT CHANGE ORDER NO._____
SHEET _____ OF _____

CONDUIT DATA

Conduit No	Reference	Size	Type	Total Fill (mm²)	Allowable Fill (mm²)	Included Cable No.	Conductor Type
0725A	E-126A	103	RGS Conduit (Pipe Sleeve)		3324.51	Pull rope	Soft-Fiber Polyester
0725B	E-126A	103	RGS Conduit (Pipe Sleeve)		3324.51	Pull rope	Soft-Fiber Polyester
0725C	E-126A	103	RGS Conduit (Pipe Sleeve)		3324.51	Pull rope	Soft-Fiber Polyester
0725D	E-126A	103	RGS Conduit (Pipe Sleeve)		3324.51	Pull rope	Soft-Fiber Polyester
0725E	E-126A	103	RGS Conduit (Pipe Sleeve)		3324.51	Pull rope	Soft-Fiber Polyester
0725F	E-126A	103	RGS Conduit (Pipe Sleeve)		3324.51	Pull rope	Soft-Fiber Polyester
0731A	E-126, E-126A	103	Liquidtight flex metal conduit		3275.44	Pull rope	Soft-Fiber Polyester
0732A	E-126, E-126A	103	Liquidtight flex metal conduit		3275.44	Pull rope	Soft-Fiber Polyester
0732B	E-126, E-126A	103	Liquidtight flex metal conduit		3275.44	Pull rope	Soft-Fiber Polyester
0732C	E-126, E-126A	103	Liquidtight flex metal conduit		3275.44	Pull rope	Soft-Fiber Polyester
0732D	E-126, E-126A	103	Liquidtight flex metal conduit		3275.44	Pull rope	Soft-Fiber Polyester
0733A	E-126, E-126A	103	Liquidtight flex metal conduit		3275.44	Pull rope	Soft-Fiber Polyester
0733B	E-126, E-126A	103	Liquidtight flex metal conduit		3275.44	Pull rope	Soft-Fiber Polyester
0733C	E-126, E-126A	103	Liquidtight flex metal conduit		3275.44	Pull rope	Soft-Fiber Polyester
0733D	E-126, E-126A	103	Liquidtight flex metal conduit		3275.44	Pull rope	Soft-Fiber Polyester
0734A	E-126, E-126A	103	Liquidtight flex metal conduit		3275.44	Pull rope	Soft-Fiber Polyester
0734B	E-126, E-126A	103	Liquidtight flex metal conduit		3275.44	Pull rope	Soft-Fiber Polyester
0734C	E-126, E-126A	103	Liquidtight flex metal conduit		3275.44	Pull rope	Soft-Fiber Polyester
0734D	E-126, E-126A	103	Liquidtight flex metal conduit		3275.44	Pull rope	Soft-Fiber Polyester
0734E	E-126, E-126A	103	Liquidtight flex metal conduit		3275.44	Pull rope	Soft-Fiber Polyester
0734F	E-126, E-126A	103	Liquidtight flex metal conduit		3275.44	Pull rope	Soft-Fiber Polyester
0735A	E-126, E-126A	103	Liquidtight flex metal conduit		3275.44	Pull rope	Soft-Fiber Polyester
0735B	E-126, E-126A	103	Liquidtight flex metal conduit		3275.44	Pull rope	Soft-Fiber Polyester
0735C	E-126, E-126A	103	Liquidtight flex metal conduit		3275.44	Pull rope	Soft-Fiber Polyester
0735D	E-126, E-126A	103	Liquidtight flex metal conduit		3275.44	Pull rope	Soft-Fiber Polyester
0735E	E-126, E-126A	103	Liquidtight flex metal conduit		3275.44	Pull rope	Soft-Fiber Polyester
0735F	E-126, E-126A	103	Liquidtight flex metal conduit		3275.44	Pull rope	Soft-Fiber Polyester

CONDUIT DATA

Conduit No	Reference	Size	Type	Total Fill (mm²)	Allowable Fill (mm²)	Included Cable No.	Conductor Type

CONDUIT AND TRAY SCHEDULE

E-402B

DESIGN OVERSIGHT
BEHZAD GOLEMOHAMMADI

CALCULATED/DESIGNED BY
CHECKED BY

DATE REVISED BY
DATE REVISED

STATE OF CALIFORNIA - DEPARTMENT OF TRANSPORTATION
Caltrans

LAST REVISION 00-00-00
DATE PLOTTED => 7/11/2008
TIME PLOTTED => 3:03:09 PM

FOR REDUCED PLANS ORIGINAL SCALE IS IN MILLIMETERS 0 20 40 60 80

DGN FILE =>T:\13103\MS\pse\SAS Struc\CCO\SAS CCO42S1\CCO 42S1 Final Submittal 2008-07-11\04-0120f1_035 7S02.dgn
USERNAME =>llorico

CU 04251 EA 0120F1

DIST	COUNTY	ROUTE	KILOMETER POST TOTAL PROJECT	SHEET No	TOTAL SHEETS
04	SF	80	13.2/13.9	357 S3	1204

REGISTERED ELECTRICAL ENGINEER 2/22/08 DATE

PLANS APPROVAL DATE

REGISTERED PROFESSIONAL ENGINEER S. A. ESTOQUE, JR. No. E-10151 Exp. 12/31/2008 ELECTRICAL STATE OF CALIFORNIA

PB AMERICAS, Inc.
A Parsons Brinckerhoff Company
303 Second St., Suite 700N
San Francisco, CA 94107-1317

The State of California or its officers or agents shall not be responsible for the accuracy or completeness of electronic copies of this plan sheet.

Caltrans now has a web site! To get to the web site, go to http://www.dot.ca.gov

Caltrans Metric

REQUEST FOR INFORMATION NOT ADDRESSED IN THIS CCO REMAIN IN FORCE

MARK	DATE	DESCRIPTIONS	BY	CH'D	CCO#
0	02/25/08	CABLE TRAY CHANGES	RR TW	RG	42S1

REVISIONS

CONTRACT CHANGE ORDER NO._____
SHEET _____ OF _____

CONDUIT DATA

Conduit No	Reference	Size	Type	Total Fill (mm²)	Allowable Fill (mm²)	Included Cable No.	Conductor Type
0800	E-21, E21B	103	Liquidtight flex metal conduit		3275.44	Pull rope	Soft-Fiber Polyester
0801	E-21, E21B	103	Liquidtight flex metal conduit		3275.44	Pull rope	Soft-Fiber Polyester
0802	E-21, E21B	103	Liquidtight flex metal conduit		3275.44	Pull rope	Soft-Fiber Polyester
0803	E-21, E21B	103	Liquidtight flex metal conduit		3275.44	Pull rope	Soft-Fiber Polyester
0804	E-21, E21B	103	Liquidtight flex metal conduit		3275.44	Pull rope	Soft-Fiber Polyester
0805	E-21, E21B	103	Liquidtight flex metal conduit		3275.44	Pull rope	Soft-Fiber Polyester
0806	E-21, E21B	103	Liquidtight flex metal conduit		3275.44	Pull rope	Soft-Fiber Polyester
0807	E-21, E21B	103	Liquidtight flex metal conduit		3275.44	Pull rope	Soft-Fiber Polyester
0808	E-21, E21B	103	Liquidtight flex metal conduit		3275.44	Pull rope	Soft-Fiber Polyester
0809	E-21, E21B	103	Liquidtight flex metal conduit		3275.44	Pull rope	Soft-Fiber Polyester
0810	E-21, E21B	103	Liquidtight flex metal conduit		3275.44	Pull rope	Soft-Fiber Polyester
0811	E-21, E21B	103	Liquidtight flex metal conduit		3275.44	Pull rope	Soft-Fiber Polyester
0812	E-21, E21B	103	Liquidtight flex metal conduit		3275.44	Pull rope	Soft-Fiber Polyester
0813	E-21, E21B	103	Liquidtight flex metal conduit		3275.44	Pull rope	Soft-Fiber Polyester
0814	E-21, E21B	103	Liquidtight flex metal conduit		3275.44	Pull rope	Soft-Fiber Polyester
0815	E-21, E21B	103	Liquidtight flex metal conduit		3275.44	Pull rope	Soft-Fiber Polyester
0816	E-21, E21B	103	Liquidtight flex metal conduit		3275.44	Pull rope	Soft-Fiber Polyester
0817	E-21, E21B	103	Liquidtight flex metal conduit		3275.44	Pull rope	Soft-Fiber Polyester
0818	E-21, E21B	103	Liquidtight flex metal conduit		3275.44	Pull rope	Soft-Fiber Polyester
0819	E-21, E21B	103	Liquidtight flex metal conduit		3275.44	Pull rope	Soft-Fiber Polyester
0820	E-21, E21B	103	Liquidtight flex metal conduit		3275.44	Pull rope	Soft-Fiber Polyester
0821	E-21, E21B	103	Liquidtight flex metal conduit		3275.44	Pull rope	Soft-Fiber Polyester
0822A	E-212A	103	RGS Conduit (Pipe Sleeve)		3324.51	Pull rope	Soft-Fiber Polyester
0823A	E-212A	103	RGS Conduit (Pipe Sleeve)		3324.51	Pull rope	Soft-Fiber Polyester
0823B	E-212A	103	RGS Conduit (Pipe Sleeve)		3324.51	Pull rope	Soft-Fiber Polyester
0823C	E-212A	103	RGS Conduit (Pipe Sleeve)		3324.51	Pull rope	Soft-Fiber Polyester
0823D	E-212A	103	RGS Conduit (Pipe Sleeve)		3324.51	Pull rope	Soft-Fiber Polyester
0824A	E-212A	103	RGS Conduit (Pipe Sleeve)		3324.51	Pull rope	Soft-Fiber Polyester
0824B	E-212A	103	RGS Conduit (Pipe Sleeve)		3324.51	Pull rope	Soft-Fiber Polyester
0824C	E-212A	103	RGS Conduit (Pipe Sleeve)		3324.51	Pull rope	Soft-Fiber Polyester
0824D	E-212A	103	RGS Conduit (Pipe Sleeve)		3324.51	Pull rope	Soft-Fiber Polyester

CONDUIT DATA

Conduit No	Reference	Size	Type	Total Fill (mm²)	Allowable Fill (mm²)	Included Cable No.	Conductor Type
0825A	E-212A	103	RGS Conduit (Pipe Sleeve)		3324.51	Pull rope	Soft-Fiber Polyester
0825B	E-212A	103	RGS Conduit (Pipe Sleeve)		3324.51	Pull rope	Soft-Fiber Polyester
0825C	E-212A	103	RGS Conduit (Pipe Sleeve)		3324.51	Pull rope	Soft-Fiber Polyester
0825D	E-212A	103	RGS Conduit (Pipe Sleeve)		3324.51	Pull rope	Soft-Fiber Polyester
0825E	E-212A	103	RGS Conduit (Pipe Sleeve)		3324.51	Pull rope	Soft-Fiber Polyester
0825F	E-212A	103	RGS Conduit (Pipe Sleeve)		3324.51	Pull rope	Soft-Fiber Polyester
0826A	E-212A	103	RGS Conduit (Pipe Sleeve)		3324.51	Pull rope	Soft-Fiber Polyester
0826B	E-212A	103	RGS Conduit (Pipe Sleeve)		3324.51	Pull rope	Soft-Fiber Polyester
0826C	E-212A	103	RGS Conduit (Pipe Sleeve)		3324.51	Pull rope	Soft-Fiber Polyester
0826D	E-212A	103	RGS Conduit (Pipe Sleeve)		3324.51	Pull rope	Soft-Fiber Polyester
0826E	E-212A	103	RGS Conduit (Pipe Sleeve)		3324.51	Pull rope	Soft-Fiber Polyester
0826F	E-212A	103	RGS Conduit (Pipe Sleeve)		3324.51	Pull rope	Soft-Fiber Polyester

CONDUIT AND TRAY SCHEDULE

E-402C

STATE OF CALIFORNIA - DEPARTMENT OF TRANSPORTATION

Caltrans

DESIGN OVERSIGHT
BEHZAD GOLEMOHAMMADI

CALCULATED/DESIGNED BY | CHECKED BY

DATE | REVISED BY | DATE REVISED

LAST REVISION 00-00-00

DATE PLOTTED => 7/11/2008
TIME PLOTTED => 3:03:25 PM

FOR REDUCED PLANS ORIGINAL SCALE IS IN MILLIMETERS 0 20 40 60 80

DGN FILE =>T:\13103\MS\pse\SAS Struc\CCO\SAS CCO42S1\CCO 42S1 Final Submittal 2008-07-11\04-0120f1_035 7S03.dgn
USERNAME =>llorico

CU 04251 | EA 0120F1

DIST	COUNTY	ROUTE	KILOMETER POST TOTAL PROJECT	SHEET No	TOTAL SHEETS
04	SF	80	13.2/13.9	357 S4	1204

REGISTERED ELECTRICAL ENGINEER 2/22/08 DATE

PLANS APPROVAL DATE

REGISTERED PROFESSIONAL ENGINEER S. A. ESTOQUE, JR. No. E-10151 Exp. 12/31/2008 ELECTRICAL STATE OF CALIFORNIA

PB AMERICAS, Inc.
A Parsons Brinckerhoff Company
303 Second St., Suite 700N
San Francisco, CA 94107-1317

The State of California or its officers or agents shall not be responsible for the accuracy or completeness of electronic copies of this plan sheet.

Caltrans now has a web site! To get to the web site, go to http://www.dot.ca.gov

Caltrans Metric

REQUEST FOR INFORMATION NOT ADDRESSED IN THIS CCO REMAIN IN FORCE

MARK	DATE	DESCRIPTIONS	BY	CH'D	CCO#
0	02/25/08	CABLE TRAY CHANGES	RR TW	RG	42S1

REVISIONS

CONTRACT CHANGE ORDER NO._____
SHEET _____ OF _____

CONDUIT DATA

Conduit No	Reference	Size	Type	Total Fill (mm²)	Allowable Fill (mm²)	Included Cable No.	Conductor Type
0832A	E-212, E212A	103	Liquidtight flex metal conduit		3275.44	Pull rope	Soft-Fiber Polyester
0833A	E-212, E212A	103	Liquidtight flex metal conduit		3275.44	Pull rope	Soft-Fiber Polyester
0833B	E-212, E212A	103	Liquidtight flex metal conduit		3275.44	Pull rope	Soft-Fiber Polyester
0833C	E-212, E212A	103	Liquidtight flex metal conduit		3275.44	Pull rope	Soft-Fiber Polyester
0833D	E-212, E212A	103	Liquidtight flex metal conduit		3275.44	Pull rope	Soft-Fiber Polyester
0834A	E-212, E212A	103	Liquidtight flex metal conduit		3275.44	Pull rope	Soft-Fiber Polyester
0834B	E-212, E212A	103	Liquidtight flex metal conduit		3275.44	Pull rope	Soft-Fiber Polyester
0834C	E-212, E212A	103	Liquidtight flex metal conduit		3275.44	Pull rope	Soft-Fiber Polyester
0834D	E-212, E212A	103	Liquidtight flex metal conduit		3275.44	Pull rope	Soft-Fiber Polyester
0835A	E-212, E212A	103	Liquidtight flex metal conduit		3275.44	Pull rope	Soft-Fiber Polyester
0835B	E-212, E212A	103	Liquidtight flex metal conduit		3275.44	Pull rope	Soft-Fiber Polyester
0835C	E-212, E212A	103	Liquidtight flex metal conduit		3275.44	Pull rope	Soft-Fiber Polyester
0835D	E-212, E212A	103	Liquidtight flex metal conduit		3275.44	Pull rope	Soft-Fiber Polyester
0835E	E-212, E212A	103	Liquidtight flex metal conduit		3275.44	Pull rope	Soft-Fiber Polyester
0835F	E-212, E212A	103	Liquidtight flex metal conduit		3275.44	Pull rope	Soft-Fiber Polyester
0836A	E-212, E212A	103	Liquidtight flex metal conduit		3275.44	Pull rope	Soft-Fiber Polyester
0836B	E-212, E212A	103	Liquidtight flex metal conduit		3275.44	Pull rope	Soft-Fiber Polyester
0836C	E-212, E212A	103	Liquidtight flex metal conduit		3275.44	Pull rope	Soft-Fiber Polyester
0836D	E-212, E212A	103	Liquidtight flex metal conduit		3275.44	Pull rope	Soft-Fiber Polyester
0836E	E-212, E212A	103	Liquidtight flex metal conduit		3275.44	Pull rope	Soft-Fiber Polyester
0836F	E-212, E212A	103	Liquidtight flex metal conduit		3275.44	Pull rope	Soft-Fiber Polyester

CONDUIT DATA

Conduit No	Reference	Size	Type	Total Fill (mm²)	Allowable Fill (mm²)	Included Cable No.	Conductor Type

CONDUIT AND TRAY SCHEDULE

E-402D

DATE REVISED BY | DATE REVISED

CALCULATED/DESIGNED BY | CHECKED BY

DESIGN OVERSIGHT
BEHZAD GOLEMOHAMMADI

STATE OF CALIFORNIA - DEPARTMENT OF TRANSPORTATION
Caltrans

LAST REVISION 00-00-00 | DATE PLOTTED => 7/11/2008 TIME PLOTTED => 3:03:48 PM

FOR REDUCED PLANS ORIGINAL SCALE IS IN MILLIMETERS 0 20 40 60 80

DGN FILE =>T:\13103\MS\pse\SAS Struc\CCO\SAS CCO42S1\CCO 42S1 Final Submittal 2008-07-11\04-0120f1_035 7S04.dgn
USERNAME =>llorico

CU 04251 | EA 0120F1

DIST	COUNTY	ROUTE	KILOMETER POST TOTAL PROJECT	SHEET No	TOTAL SHEETS
04	SF	80	13.2/13.9	361 R3	1204

Jens Erlingsson 12/19/02
REGISTERED ELECTRICAL ENGINEER DATE

12-6-04
PLANS APPROVAL DATE

REGISTERED PROFESSIONAL ENGINEER JENS ERLINGSSON No. 8249 Exp. 9/30/06 ELECTRICAL STATE OF CALIFORNIA

PB POWER, Inc.
A Parsons Brinckerhoff Company
303 Second St., Suite 700N
San Francisco, CA 94107-1317

The State of California or its officers or agents shall not be responsible for the accuracy or completeness of electronic copies of this plan sheet.

Caltrans now has a web site! To get to the web site, go to http://www.dot.ca.gov

Caltrans Metric

REGISTERED PROFESSIONAL ENGINEER S. A. ESTOQUE, JR. No. E-10151 Exp. 12/31/2008 ELECTRICAL STATE OF CALIFORNIA

FOR REVISION ONLY

REQUEST FOR INFORMATION NOT ADDRESSED IN THIS CCO REMAIN IN FORCE

MARK	DATE	DESCRIPTIONS	BY	CH'D	CCO#
3	02/25/08	CABLE TRAY CHANGES	RR TW	RG	42S1
2	03/04/08	BARRIER MODIFICATIONS	JS BM	RG SE	44
1	02/19/08	ELECTRICAL MODIFICATIONS	MP EL	RR	42

REVISIONS

CONTRACT CHANGE ORDER NO._____
SHEET_____ OF _____

CONDUIT DATA

Conduit No	Reference	Size	Type	Total Fill (mm²)	Allowable Fill (mm²)	Included Cable No.	Conductor Type
1843	E-47	41	RGS conduit	0.00	534.55	Pull rope	Soft-Fiber Polyester
1844	E-47	41	RGS conduit	0.00	534.55	Pull rope	Soft-Fiber Polyester
1845	E-47	41	RGS conduit	0.00	534.55	Pull rope	Soft-Fiber Polyester
1846	E-48	41	RGS conduit	0.00	534.55	Pull rope	Soft-Fiber Polyester
1847	E-48	41	RGS conduit	0.00	534.55	Pull rope	Soft-Fiber Polyester
1848	E-48	41	RGS conduit	0.00	534.55	Pull rope	Soft-Fiber Polyester
1849	E-48	41	RGS conduit	0.00	534.55	Pull rope	Soft-Fiber Polyester
1850	E-48	41	RGS conduit	0.00	534.55	Pull rope	Soft-Fiber Polyester
1851	E-49	41	RGS conduit	0.00	534.55	Pull rope	Soft-Fiber Polyester
1852	E-49	41	RGS conduit	0.00	534.55	Pull rope	Soft-Fiber Polyester
1853	E-49	41	RGS conduit	0.00	534.55	Pull rope	Soft-Fiber Polyester
1854	E-49	41	RGS conduit	262.06	534.55		
						UP107-3A	2 + 1 gnd #12,#12, 600 V, RHH/RHW insulation
						Pull rope	Soft-Fiber Polyester
1855	E-49	41	RGS conduit	262.06	534.55		
						UP107-3A	2 + 1 gnd #12,#12, 600 V, RHH/RHW insulation
						Pull rope	Soft-Fiber Polyester
1856	E-50	41	RGS conduit	262.06	534.55		
						UP107-3A	2 + 1 gnd #12,#12, 600 V, RHH/RHW insulation
						Pull rope	Soft-Fiber Polyester
1857	E-50	41	RGS conduit	162.40	534.55	UP107-3A	2 + 1 gnd #12,#12, 600 V, RHH/RHW insulation
						Pull rope	Soft-Fiber Polyester
1858	E-50	41	RGS conduit	0.00	534.55		
						Pull rope	Soft-Fiber Polyester
1859	E-50	41	RGS conduit	0.00	534.55	Pull rope	Soft-Fiber Polyester
1860	E-50	41	RGS conduit	0.00	534.55		
						Pull rope	Soft-Fiber Polyester
1861	E-50	41	RGS conduit	265.64	534.55	Pull rope	Soft-Fiber Polyester
						S-1032-2	3 + 1 gnd #6, #8, 600 V, RHH/RHW insulation
1862	E-50, E-51	41	RGS conduit	265.64	534.55	Pull rope	Soft-Fiber Polyester
						S-1032-2	3 + 1 gnd #6, #8, 600 V, RHH/RHW insulation
1863	E-51	41	RGS conduit	265.64	534.55	Pull rope	Soft-Fiber Polyester
						S-1032-S	3 + 1 gnd #6, #8, 600 V, RHH/RHW insulation
1864	E-51	41	RGS conduit	0.00	534.55	Pull rope	Soft-Fiber Polyester
1865	E-51	41	RGS conduit	0.00	534.55	Pull rope	Soft-Fiber Polyester
1900	E-50	41	RGS conduit	0.00	534.55	Pull rope	Soft-Fiber Polyester
1901	E-50	41	RGS conduit	0.00	534.55	Pull rope	Soft-Fiber Polyester
1902	E-50	41	RGS conduit	0.00	534.55	Pull rope	Soft-Fiber Polyester
1903	E-51	41	RGS conduit	0.00	534.55	Pull rope	Soft-Fiber Polyester
1904	E-51	41	RGS conduit	0.00	534.55	Pull rope	Soft-Fiber Polyester
1905	E-51	41	RGS conduit	0.00	534.55	Pull rope	Soft-Fiber Polyester
1906	E-51	41	RGS conduit	0.00	534.55	Pull rope	Soft-Fiber Polyester

CONDUIT DATA

Conduit No	Reference	Size	Type	Total Fill (mm²)	Allowable Fill (mm²)	Included Cable No.	Conductor Type
1907	E-51	41	RGS conduit	0.00	534.55	Pull rope	Soft-Fiber Polyester
1908	E-51	41	RGS conduit	0.00	534.55	Pull rope	Soft-Fiber Polyester
1950	E-50	41	RGS conduit	0.00	534.55	Pull rope	Soft-Fiber Polyester
1951	E-50	41	RGS conduit	0.00	534.55	Pull rope	Soft-Fiber Polyester
1952	E-50	41	RGS conduit	0.00	534.55	Pull rope	Soft-Fiber Polyester
1953	E-51	41	RGS conduit	0.00	534.55	Pull rope	Soft-Fiber Polyester
1954	E-51	41	RGS conduit	0.00	534.55	Pull rope	Soft-Fiber Polyester
1955	E-51	41	RGS conduit	0.00	534.55	Pull rope	Soft-Fiber Polyester
1956	E-51	41	RGS conduit	0.00	534.55	Pull rope	Soft-Fiber Polyester
1957	E-51	41	RGS conduit	0.00	534.55	Pull rope	Soft-Fiber Polyester
1958	E-51	41	RGS conduit	0.00	534.55	Pull rope	Soft-Fiber Polyester
1T13	E-96, E-101, E-126A (3)	305	152.4 mm siderail ladder tray	2780.99	19354.80	1391	3-1/C #4/0 + 1/C #1/0 gnd, 15 kV, EPR insulation
						Pull rope	Soft-Fiber Polyester
1T14	E-20B, E-126 (3)	305	152.4 mm siderail ladder tray	2780.99	8387.08	1391	3-1/C #4/0 + 1/C #1/0 gnd, 15 kV, EPR insulation
						Pull rope	Soft-Fiber Polyester
1T23	E-96, E-101, E-126A (3)	610	152.4 mm siderail ladder tray	13557.45	18064.48		
						A-3010-1	1-3/C + gnd #2, 600 V, EPR insulation
						1115-2	1-3/C #16, 600 V, EPR insulation
						S-1031-1	1-3/C + gnd #2, 600 V, EPR insulation
						1115-1	1-3/C #14, 600 V, EPR insulation
						2201-1	1-2/C + gnd #8, 600 V, EPR insulation
						A-3009-3	1-3/C + gnd #6, 600 V, EPR insulation
						1106	1-3/C + gnd #6, 600 V, EPR insulation
						S-3056-5	1-4/C #14, 600 V, EPR insulation
						S-3056-7	1-2/C #14, 600 V, EPR insulation
						S-3056-8	1-4/C #14, 600 V, EPR insulation
						Pull rope	Soft-Fiber Polyester
						A-3010-3	1-3/C #6 + gnd 600 V, RHH/RHW insulation
						S-3051-1	1-3/C + gnd #4, 600 V, EPR insulation
						UP108-3	1-2/C + gnd #8, 600 V, EPR insulation
						1255-1	1-3/C #16 ,600V, EPR insulation
						A-3001-1	1-3/C + gnd #4, 600 V, EPR insulation
						A-3012-1	1-3/C + gnd #2, 600 V, EPR insulation
						A-3013-1	1-3/C + gnd #2, 600 V, EPR insulation
						S-3022-1	1-3/C + gnd #2, 600 V, EPR insulation
						A-3002-1	1-3/C + gnd #4, 600 V, EPR insulation
						UP107-6	1-2/C + gnd #8, 600 V, EPR insulation

For continuation, see next sheet.

CONDUIT AND TRAY SCHEDULE

E-406

DESIGN OVERSIGHT
BEHZAD GOLEMOHAMMADI

CALCULATED/DESIGNED BY PBP
CHECKED BY AB
DATE 8/02 8/02
REVISED BY DATE REVISED

STATE OF CALIFORNIA - DEPARTMENT OF TRANSPORTATION
Caltrans

LAST REVISION 00-00-00
DATE PLOTTED => 7/11/2008
TIME PLOTTED => 3:04:11 PM

FOR REDUCED PLANS ORIGINAL SCALE IS IN MILLIMETERS 0 20 40 60 80

DGN FILE =>T:\13103\MS\pse\SAS Struc\CCO\SAS CCO42S1\CCO 42S1 Final Submittal 2008-07-11\04-0120f1_0361R03.dgn
USERNAME =>llorico
CU 04251 EA 0120F1

DIST	COUNTY	ROUTE	KILOMETER POST TOTAL PROJECT	SHEET No	TOTAL SHEETS
04	SF	80	13.2/13.9	362 R2	1204

Caltrans Metric

12/19/02
REGISTERED ELECTRICAL ENGINEER DATE

12-6-04
PLANS APPROVAL DATE

REGISTERED PROFESSIONAL ENGINEER JENS ERLINGSSON No. 8249 Exp. 9/30/06 ELECTRICAL STATE OF CALIFORNIA

PB POWER, Inc.
A Parsons Brinckerhoff Company
303 Second St., Suite 700N
San Francisco, CA 94107-1317

The State of California or its officers or agents shall not be responsible for the accuracy or completeness of electronic copies of this plan sheet.

Caltrans now has a web site! To get to the web site, go to http://www.dot.ca.gov

REGISTERED PROFESSIONAL ENGINEER S. A. ESTOQUE, JR. No. E-10151 Exp. 12/31/2008 ELECTRICAL STATE OF CALIFORNIA

FOR REVISION ONLY

REQUEST FOR INFORMATION NOT ADDRESSED IN THIS CCO REMAIN IN FORCE

MARK	DATE	DESCRIPTIONS	BY	CH'D	CCO#
2	02/25/08	CABLE TRAY CHANGES	RR TW	RG	42S1
1	03/04/08	BARRIER MODIFICATIONS	JS BM	RG SE	44

REVISIONS

CONTRACT CHANGE ORDER NO._____
SHEET_____ OF_____

CONDUIT DATA

Conduit No.	Reference	Size	Type	Total Fill (mm²)	Allowable Fill (mm²)	Included Cable No.	Conductor Type
						1117-1	1-3/C #14, 600 V, EPR insulation
						A-3009-1	1-3/C + gnd #2, 600 V, EPR insulation
						1202-4	1-3/C #14, 600 V, EPR insulation
						1117-2	1-3/C #16, 600 V, EPR insulation
						S-3021-1	1-3/C + gnd #4, 600 V, EPR insulation
						S-3023-1	1-3/C + gnd #4, 600 V, EPR insulation
						S-3056-1	1-3/C + gnd #6, 600 V, EPR insulation
						S-1031-3	1-3/C + gnd #4, 600 V, EPR insulation
						S-1032-1	1-3/C + gnd #4, 600 V, EPR insulation
						A-1035-1	1-3/C + gnd #6, 600 V, EPR insulation
						1202-3	1-7/C #16, 600 V, EPR insulation
						1099	1-3/C + gnd #2, 600 V, EPR insulation
						1098	1-3/C + gnd #2, 600 V, EPR insulation
						1097	1-3/C + gnd #2, 600 V, EPR insulation
						1096	1-3/C + gnd #2, 600 V, EPR insulation
						1095	1-3/C + gnd #2, 600 V, EPR insulation
						1117	1-3/C + gnd #2/0, 600 V, EPR insulation
						1256-1	1-3/C #16, 600 V, EPR insulation
						1202-1	1-2/C + gnd #8 ,600 V, EPR insulation
						1255-2	1-3/C #16, 600 V, EPR insulation
						A-3008-1	1-2/C + gnd #8, 600 V, EPR insulation
						1202-2	1-3/C #14, 600 V, EPR insulation
						A-3011-1	1-3/C + gnd #2, 600 V, EPR insulation
1T24	E-114	610	152.4 mm siderail ladder tray	1652.27	18064.48	UP104-7	1-2/C + gnd #8, 600 V, EPR insulation
						1095	1-3/C + gnd #2, 600 V, EPR insulation
						Pull rope	Soft-Fiber Polyester
						UP104-9	1-2/C + gnd #10, 600 V, EPR insulation
						UP104-8	1-2/C + gnd #8, 600 V, EPR insulation
						1255-1	1-3/C #16, 600 V, EPR insulation
						UP104-3	1-2/C + gnd #10, 600 V, EPR insulation
						UP204-1	1-2/C + gnd #10, 600 V, EPR insulation
						UP104-6	1-2/C + gnd #8 ,600 V, EPR insulation
1T25	E-115	610	152.4 mm siderail ladder tray	3092.69	18064.48	UP105-10	1-2/C + gnd #8, 600 V, EPR insulation
						1201-1	1-2/C + gnd #8, 600 V, EPR insulation
						1201-2	1-2/C + gnd #8, 600 V, EPR insulation
						1201-6	1-2/C + gnd #8, 600 V, EPR insulation
						1096	1-3/C + gnd #2, 600 V, EPR insulation
						1255-1	1-3/C #16, 600 V, EPR insulation
						1202-4	1-3/C #14, 600 V, EPR insulation
						UP105-8	1-2/C + gnd #8, 600 V, EPR insulation
						UP205-1	1-2/C + gnd #10, 600 V, EPR insulation
						1115-1	1-3/C #14, 600 V, EPR insulation
						1202-3	1-7/C #16, 600 V, EPR insulation
						1202-2	1-3/C #14, 600 V, EPR insulation
						1115-2	1-3/C #16, 600 V, EPR insulation
						1255-2	1-3/C #16, 600 V, EPR insulation
						Pull rope	Soft-Fiber Polyester
						UP105-3	1-2/C + gnd #10, 600 V, EPR insulation
						UP105-9	1-2/C + gnd #8, 600 V, EPR insulation
						UP105-7	1-2/C + gnd #8, 600 V, EPR insulation
						S-3056-5	1-4/C #14, 600 V, EPR insulation
						S-3056-7	1-2/C #14, 600 V, EPR insulation
1T26	E-116	610	152.4 mm siderail ladder tray	2773.72	18064.48	UP106-1	1-2/C + gnd #8, 600 V, EPR insulation
						UP106-8	1-2/C + gnd #8, 600 V, EPR insulation
						UP106-3	1-2/C + gnd #8, 600 V, EPR insulation
						1255-2	1-3/C #16, 600 V, EPR insulation
						UP206-1	1-2/C + gnd #10, 600 V, EPR insulation
						Pull rope	Soft-Fiber Polyester
						1202-2	1-3/C #14, 600 V, EPR insulation
						1202-3	1-7/C #16, 600 V, EPR insulation
						UP106-6	1-2/C + gnd #8, 600 V, EPR insulation
						UP106-7	1-2/C + gnd #8, 600 V, EPR insulation
						CCTVE01BA	TVP
						CCTVE01BB	TVCP
						UP106-9	1-2/C + gnd #8, 600 V, EPR insulation
						1097	1-3/C + gnd #2, 600 V, EPR insulation
						1202-4	1-3/C #14, 600 V, EPR insulation
						1202-1	1-2/C + gnd #8, 600 V, EPR insulation
1T27	E-117	610	152.4 mm siderail ladder tray	1726.55	18064.48	UP107-6	1-2/C + gnd #8, 600 V, EPR insulation
						Pull rope	Soft-Fiber Polyester
						UP107-7	1-2/C + gnd #8, 600 V, EPR insulation
						UP107-9	1-2/C + gnd #8, 600 V, EPR insulation
						1256-1	1-3/C #16 ,600V, EPR insulation
						UP107-8	1-2/C + gnd #8, 600 V, EPR insulation

CONDUIT DATA

Conduit No.	Reference	Size	Type	Total Fill (mm²)	Allowable Fill (mm²)	Included Cable No.	Conductor Type
						1098	1-3/C + gnd #2, 600 V, EPR insulation
						UP107-3	1-2/C + gnd #8, 600 V, EPR insulation
1T28	E-118	610	152.4 mm siderail ladder tray	3336.36	18064.48	UP108-8	1-2/C + gnd #8, 600 V, EPR insulation
						UP108-3	1-2/C + gnd #8, 600 V, EPR insulation
						UP108-10	1-2/C + gnd #8, 600 V, EPR insulation
						S-3056-8	1-4/C #14, 600 V, EPR insulation
						UP108-4	1-2/C + gnd #8, 600 V, EPR insulation
						Pull rope	Soft-Fiber Polyester
						UP108-7	1-2/C + gnd #8, 600 V, EPR insulation
						1117-2	1-3/C #16 ,600V, EPR insulation
						2201-5	1-3/C #14, 600 V, EPR insulation
						2201-3	1-3/C #14, 600 V, EPR insulation
						2201-1	1-2/C + gnd #8, 600 V, EPR insulation
						2201-4	1-9/C #16, 600 V, EPR insulation
						1118-2	1-3/C #16, 600 V, EPR insulation
						UP108-9	1-2/C + gnd #8, 600 V, EPR insulation
						UP108-12	1-2/C + gnd #8, 600 V, EPR insulation
						1117-1	1-3/C #14, 600 V, EPR insulation
						1118-1	1-3/C #14, 600 V, EPR insulation
						UP108-2	1-2/C + gnd #8, 600 V, EPR insulation
						1099	1-3/C + gnd #2, 600 V, EPR insulation
						1256-1	1-3/C #16, 600 V, EPR insulation
1T29	E-20B, E-126 (2)	610	152.4 mm siderail ladder tray	11507.41	18064.48	1106	1-3/C + gnd #6, 600 V, EPR insulation
						S-1032-1	1-3/C + gnd #4, 600 V, EPR insulation
						A-3002-1	1-3/C + gnd #4, 600 V, EPR insulation
						A-3001-1	1-3/C + gnd #4, 600 V, EPR insulation
						A-3013-1	1-3/C + gnd #2, 600 V, EPR insulation
						A-3012-1	1-3/C + gnd #2, 600 V, EPR insulation
						S-3023-1	1-3/C + gnd #4, 600 V, EPR insulation
						1097	1-3/C + gnd #2, 600 V, EPR insulation
						S-3051-1	1-3/C + gnd #4, 600 V, EPR insulation
						A-1035-1	1-3/C + gnd #6, 600 V, EPR insulation
						A-3011-1	1-3/C + gnd #2, 600 V, EPR insulation
						S-3021-1	1-3/C + gnd #4, 600 V, EPR insulation
						S-3022-1	1-3/C + gnd #2, 600 V, EPR insulation
						S-3056-1	1-3/C + gnd #6, 600 V, EPR insulation
						1098	1-3/C + gnd #2, 600 V, EPR insulation
						1096	1-3/C + gnd #2, 600 V, EPR insulation
						1095	1-3/C + gnd #2, 600 V, EPR insulation
						S-1031-1	1-3/C + gnd #2, 600 V, EPR insulation
						Pull rope	Soft-Fiber Polyester
						1099	1-3/C + gnd #2, 600 V, EPR insulation
						A-3008-1	1-2/C + gnd #8, 600 V, EPR insulation
						1117	1-3/C + gnd #2/0, 600 V, EPR insulation
						A-3010-1	1-3/C + gnd #2, 600 V, EPR insulation
						1115	1-3/C + gnd #1/0, 600 V, EPR insulation
						1115-1	1-3/C #14, 600 V, EPR insulation
						1115-2	1-3/C #16, 600 V, EPR insulation
						A-3009-1	1-3/C + gnd #2, 600 V, EPR insulation

For continuation, see next sheet.

CONDUIT AND TRAY SCHEDULE

E-407

STATE OF CALIFORNIA - DEPARTMENT OF TRANSPORTATION
Caltrans

DESIGN OVERSIGHT
BEHZAD GOLEMOHAMMADI

CALCULATED/DESIGNED BY | CHECKED BY
PBP | AB
DATE 8/02 | 8/02
REVISED BY | DATE REVISED

LAST REVISION 00-00-00
DATE PLOTTED => 7/11/2008
TIME PLOTTED => 3:04:29 PM

DIST	COUNTY	ROUTE	KILOMETER POST TOTAL PROJECT	SHEET No	TOTAL SHEETS
04	SF	80	13.2/13.9	363 R2	1204

Caltrans Metric

REGISTERED ELECTRICAL ENGINEER 12/19/02 DATE

12-6-04
PLANS APPROVAL DATE

REGISTERED PROFESSIONAL ENGINEER JENS ERLINGSSON No. 8249 Exp. 9/30/06 ELECTRICAL STATE OF CALIFORNIA

PB POWER, Inc.
A Parsons Brinckerhoff Company
303 Second St., Suite 700N
San Francisco, CA 94107-1317

The State of California or its officers or agents shall not be responsible for the accuracy or completeness of electronic copies of this plan sheet.

Caltrans now has a web site! To get to the web site, go to http://www.dot.ca.gov

REGISTERED PROFESSIONAL ENGINEER S. A. ESTOQUE, JR. No. E-10151 Exp. 12/31/2008 ELECTRICAL STATE OF CALIFORNIA

FOR REVISION ONLY

CONTRACT CHANGE ORDER NO._____
SHEET_____ OF_____

REQUEST FOR INFORMATION NOT ADDRESSED IN THIS CCO REMAIN IN FORCE

MARK	DATE	DESCRIPTIONS	BY	CH'D	CCO#
2	02/25/08	CABLE TRAY CHANGES	RR TW	RG	42S1
1	03/04/08	BARRIER MODIFICATIONS	JS BM	RG SE	44

REVISIONS

CONDUIT DATA

Conduit No	Reference	Size	Type	Total Fill (mm²)	Allowable Fill (mm²)	Included Cable No.	Conductor Type
1T33	E-96, E-101	610	152.4 mm siderail ladder tray	7720.94	18064.48	UP104-8	1-2/C + gnd #8, 600 V, EPR insulation
	E-126A					UP108-12	1-2/C + gnd #8, 600 V, EPR insulation
	2					UP108-9	1-2/C + gnd #8, 600 V, EPR insulation
						A-1011-1	1-3/C + gnd #2, 600 V, EPR insulation
						A-1012-1	1-3/C + gnd #2, 600 V, EPR insulation
						UP104-3	1-2/C + gnd #10, 600 V, EPR insulation
						UP107-3	1-2/C + gnd #8, 600 V, EPR insulation
						UP105-9	1-2/C + gnd #8, 600 V, EPR insulation
						UP104-9	1-2/C + gnd #10, 600 V, EPR insulation
						Pull rope	Soft-Fiber Polyester
						UP108-4	1-2/C + gnd #8, 600 V, EPR insulation
						UP108-2	1-2/C + gnd #8, 600 V, EPR insulation
						UP108-7	1-2/C + gnd #8, 600 V, EPR insulation
						UP107-7	1-2/C + gnd #8, 600 V, EPR insulation
						UP106-7	1-2/C + gnd #8, 600 V, EPR insulation
						UP105-7	1-2/C + gnd #8, 600 V, EPR insulation
						A-1013-1	1-3/C + gnd #2, 600 V, EPR insulation
						UP107-9	1-2/C + gnd #8, 600 V, EPR insulation
						A-1014-1	1-3/C + gnd #2, 600 V, EPR insulation
						UP106-3	1-2/C + gnd #8, 600 V, EPR insulation
						UP105-3	1-2/C + gnd #10, 600 V, EPR insulation
						UP106-6	1-2/C + gnd #8, 600 V, EPR insulation
						UP105-10	1-2/C + gnd #8, 600 V, EPR insulation
						UP104-6	1-2/C + gnd #8, 600 V, EPR insulation
						UP107-8	1-2/C + gnd #8, 600 V, EPR insulation
						UP106-8	1-2/C + gnd #8, 600 V, EPR insulation
						UP105-8	1-2/C + gnd #8, 600 V, EPR insulation
						UP104-7	1-2/C + gnd #8, 600 V, EPR insulation
						UP108-8	1-2/C + gnd #8, 600 V, EPR insulation
						UP106-9	1-2/C + gnd #8, 600 V, EPR insulation
						UP108-10	1-2/C + gnd #8, 600 V, EPR insulation
1T39	E-20B, E-126	610	152.4 mm siderail ladder tray	1054.36	18064.48	A-1011-1	1-3/C + gnd #2, 600 V, EPR insulation
	2					A-1014-1	1-3/C + gnd #2, 600 V, EPR insulation
						Pull rope	Soft-Fiber Polyester
1T43	E-96, E-101	610	152.4 mm siderail solid bottom tray 2	11370.25	38709.60	MVDSW04A	MVDS DLC
	E-126A					1144	1 - 2 pair, shielded #18 with IS/OA , 300 V, PVC jacket
	2					1475-3C	12 Fiber, single mode fiberoptic cable
						1475-3A	12 Fiber, single mode fiberoptic cable
						1474-4	50 pair #18, shielded pairs, IS/OS shield 600 V, XLPE insul., PVC jacket
						1145	1 - 2 pair, shielded #18 with IS/OA , 300 V, PVC jacket
						1474-5	50 pair #18, shielded pairs, IS/OS shield 600 V, XLPE insul., PVC jacket
						1474-7	50 pair #18, shielded pairs, IS/OS shield 600 V, XLPE insul., PVC jacket
						1477-2	72 Fiber, single mode fiberoptic riser cable
						1475-3	72 Fiber, single mode fiberoptic riser cable
						MVDSW02A	MVDS DLC
						1475-3B	12 Fiber, single mode fiberoptic cable
						2900-472B	4 pair #22, shielded pairs, FEP insulation
						2900-182A	4 pair #22, shielded pairs, FEP insulation
						2900-182B	4 pair #22, shielded pairs, FEP insulation
						2900-202A	4 pair #22, shielded pairs, FEP insulation
						2900-282A	4 pair #22, shielded pairs, FEP insulation
						2900-342A	4 pair #22, shielded pairs, FEP insulation
						2900-392A	4 pair #22, shielded pairs, FEP insulation
						2900-462A	4 pair #22, shielded pairs, FEP insulation
						2900-472A	4 pair #22, shielded pairs, FEP insulation
						Pull rope	Soft-Fiber Polyester
						2900-472C	4 pair #22, shielded pairs, FEP insulation
						1474-8	50 pair #18, shielded pairs, IS/OS shield 600 V, XLPE insul., PVC jacket
						1473-5	50 pair #18, shielded pairs, IS/OS shield 600 V, XLPE insul., PVC jacket
						1473-7	50 pair #18, shielded pairs, IS/OS shield 600 V, XLPE insul., PVC jacket
						1473-10	50 pair #18, shielded pairs, IS/OS shield 600V, XLPE insul., PVC jacket

CONDUIT DATA

Conduit No	Reference	Size	Type	Total Fill (mm²)	Allowable Fill (mm²)	Included Cable No.	Conductor Type
						1474-10	50 pair #18, shielded pairs, IS/OS shield 600 V, XLPE insul., PVC jacket
						2900-462B	4 pair #22, shielded pairs, FEP insulation
1T44	E-114	610	152.4 mm siderail solid bottom tray 2	3785.76	38709.60	1473-5	50 pair #18, shielded pairs, IS/OS shield 600 V, XLPE insul., PVC jacket
						1474-5	50 pair #18, shielded pairs, IS/OS shield 600 V, XLPE insul., PVC jacket
						1475-3A	12 Fiber, single mode fiberoptic cable
						MVDSW02A	MVDS DLC
						Pull rope	Soft-Fiber Polyester
						1474-4	50 pair #18, shielded pairs, IS/OS shield 600 V, XLPE insul., PVC jacket
1T45	E-115	610	152.4 mm siderail solid bottom tray 2	3563.45	38709.60	Pull rope	Soft-Fiber Polyester
						2900-182A	4 pair #22, shielded pairs, FEP insulation
						2910-10	4 pair #22, shielded pairs, 300 V, PE insulation
						2910-8	4 pair #22, shielded pairs, 300 V, PE insulation
						1473-5	50 pair #18, shielded pairs, IS/OS shield 600 V, XLPE insul., PVC jacket
						1474-5	50 pair #18, shielded pairs, IS/OS shield 600 V, XLPE insul., PVC jacket
						1474-5B	1 - 6 pair, shielded #18 with overall shield , 300 V, PVC jacket
						1474-5A	1 - 6 pair, shielded #18 with overall shield , 300 V, PVC jacket
						2900-472C	4 pair #22, shielded pairs, FEP insulation
						2900-182B	4 pair #22, shielded pairs, FEP insulation
						2900-472A	4 pair #22, shielded pairs, FEP insulation
						2900-462B	4 pair #22, shielded pairs, FEP insulation
						2900-462A	4 pair #22, shielded pairs, FEP insulation
						2900-392A	4 pair #22, shielded pairs, FEP insulation
						2900-342A	4 pair #22, shielded pairs, FEP insulation
						2900-282A	4 pair #22, shielded pairs, FEP insulation
						2910-7	4 pair #24, overall shielded, 30 V, PE insulation
						2900-472B	4 pair #22, shielded pairs, FEP insulation
						2900-202A	4 pair #22, shielded pairs, FEP insulation
1T46	E-118	610	152.4 mm siderail solid bottom tray 2	2757.87	38709.60	CCTVE01BD	TVL
						1474-7	50 pair #18, shielded pairs, IS/OS shield 600 V, XLPE insul., PVC jacket
						MVDSW03A	MVDS DLC
						CCTVE01BC	TVC
						1475-3B	12 Fiber, single mode fiberoptic cable
						Pull rope	Soft-Fiber Polyester
						1473-7	50 pair #18, shielded pairs, IS/OS shield 600 V, XLPE insul., PVC jacket

For continuation, see next sheet.

CONDUIT AND TRAY SCHEDULE

E-408

DATE	BY	REVISED
8/02	AB	

REVISED BY / DATE REVISED

CALCULATED/DESIGNED BY: PBP
CHECKED BY: AB

DESIGN OVERSIGHT: BEHZAD GOLEMOHAMMADI

STATE OF CALIFORNIA - DEPARTMENT OF TRANSPORTATION
Caltrans

LAST REVISION 00-00-00
DATE PLOTTED => 7/11/2008
TIME PLOTTED => 3:05:06 PM

FOR REDUCED PLANS ORIGINAL SCALE IS IN MILLIMETERS 0 20 40 60 80

DGN FILE =>T:\13103\MS\pse\SAS Struc\CCO\SAS CCO42S1\CCO 42S1 Final Submittal 2008-07-11\04-0120f1_0363R02.dgn
USERNAME =>llorico

CU 04251 | EA 0120F1

DIST	COUNTY	ROUTE	KILOMETER POST TOTAL PROJECT	SHEET No	TOTAL SHEETS
04	SF	80	13.2/13.9	363 S1	1204

Caltrans Metric

12/19/02
REGISTERED ELECTRICAL ENGINEER DATE

12-6-04
PLANS APPROVAL DATE

REGISTERED PROFESSIONAL ENGINEER JENS ERLINGSSON No. 8249 Exp. 9/30/06 ELECTRICAL STATE OF CALIFORNIA

PB POWER, Inc.
A Parsons Brinckerhoff Company
303 Second St., Suite 700N
San Francisco, CA 94107-1317

The State of California or its officers or agents shall not be responsible for the accuracy or completeness of electronic copies of this plan sheet.

Caltrans now has a web site! To get to the web site, go to http://www.dot.ca.gov

REGISTERED PROFESSIONAL ENGINEER S. A. ESTOQUE, JR. No. E-10151 Exp. 12/31/2008 ELECTRICAL STATE OF CALIFORNIA

FOR REVISION ONLY

REQUEST FOR INFORMATION NOT ADDRESSED IN THIS CCO REMAIN IN FORCE

MARK	DATE	DESCRIPTIONS	BY	CH'D	CCO#
0	02/25/08	CABLE TRAY CHANGES	TW	RG	42S1

REVISIONS

CONTRACT CHANGE ORDER NO._____
SHEET _____ OF _____

CONDUIT DATA

Conduit No	Reference	Size	Type	Total Fill (mm2)	Allowable Fill (mm2)	Included Cable No.	Conductor Type
1T14A	E-20, E20E	305	152.4 mm siderail ladder tray	0.00	8387.08	Pull rope	Soft-Fiber Polyester
1T14B	E-20, E20E	305	152.4 mm siderail ladder tray	0.00	8387.08	Pull rope	Soft-Fiber Polyester
1T23A	E-126A	610	152.4 mm siderail ladder tray	0.00	16774.16	Pull rope	Soft-Fiber Polyester
1T29A	E-20 E20E	610	152.4 mm siderail ladder tray	0.00	16774.16	Pull rope	Soft-Fiber Polyester
1T29B	E-20, E20E	610	152.4 mm siderail ladder tray	0.00	16774.16	Pull rope	Soft-Fiber Polyester
1T33A	E-126A	610	152.4 mm siderail ladder tray	0.00	16774.16	Pull rope	Soft-Fiber Polyester
1T39A	E-20 E20E	610	152.4 mm siderail ladder tray	0.00	16774.16	Pull rope	Soft-Fiber Polyester
1T39B	E-20, E20E	610	152.4 mm siderail ladder tray	0.00	16774.16	Pull rope	Soft-Fiber Polyester
1T43A	E-126A	305	152.4 mm siderail isolid bottom tray	0.00	8387.08	Pull rope	Soft-Fiber Polyester
1T49A	E-20, E20E	610	152.4 mm siderail isolid bottom tray	0.00	16774.16	Pull rope	Soft-Fiber Polyester
1T49B	E-20, E20E	610	152.4 mm siderail ladder tray	0.00	16774.16	Pull rope	Soft-Fiber Polyester
1T54A	E-20, E20E	610	152.4 mm siderail ladder tray	0.00	16774.16	Pull rope	Soft-Fiber Polyester
1T54B	E-20, E20E	610	152.4 mm siderail ladder tray	0.00	16774.16	Pull rope	Soft-Fiber Polyester

CONDUIT DATA

Conduit No	Reference	Size	Type	Total Fill (mm2)	Allowable Fill (mm2)	Included Cable No.	Conductor Type

For continuation, see next sheet.

CONDUIT AND TRAY SCHEDULE

E-408A

REVISED BY	DATE REVISED

CALCULATED/DESIGNED BY	DATE 8/02
PBP	8/02
CHECKED BY	

DESIGN OVERSIGHT
BEHZAD GOLEMOHAMMADI

STATE OF CALIFORNIA - DEPARTMENT OF TRANSPORTATION
Caltrans

LAST REVISION 00-00-00

DATE PLOTTED => 7/11/2008
TIME PLOTTED => 3:05:26 PM

FOR REDUCED PLANS ORIGINAL SCALE IS IN MILLIMETERS 0 20 40 60 80

DGN FILE =>T:\13103\MS\pse\SAS Struc\CCO\SAS CCO42S1\CCO 42S1 Final Submittal 2008-07-11\04-0120f1_0363S01.dgn
USERNAME =>llorico

CU 04251 | EA 0120F1

DIST	COUNTY	ROUTE	KILOMETER POST TOTAL PROJECT	SHEET No	TOTAL SHEETS
04	SF	80	13.2/13.9	364 R2	1204

Jens Erlingsson 12/19/02
REGISTERED ELECTRICAL ENGINEER DATE

12-6-04
PLANS APPROVAL DATE

REGISTERED PROFESSIONAL ENGINEER JENS ERLINGSSON No. 8249 Exp. 9/30/06 ELECTRICAL STATE OF CALIFORNIA

PB POWER, Inc.
A Parsons Brinckerhoff Company
303 Second St., Suite 700N
San Francisco, CA 94107-1317

The State of California or its officers or agents shall not be responsible for the accuracy or completeness of electronic copies of this plan sheet.

Caltrans now has a web site! To get to the web site, go to http://www.dot.ca.gov

Caltrans Metric

REGISTERED PROFESSIONAL ENGINEER S. A. ESTOQUE, JR. No. E-10151 Exp. 12/31/2008 ELECTRICAL STATE OF CALIFORNIA

FOR REVISION ONLY

REQUEST FOR INFORMATION NOT ADDRESSED IN THIS CCO REMAIN IN FORCE

MARK	DATE	DESCRIPTIONS	BY	CH'D	CCO#
2	02/25/08	CABLE TRAY CHANGES	TW	RG	42S1
1	03/04/08	BARRIER MODIFICATIONS	JS BM	RG SE	44

REVISIONS

CONTRACT CHANGE ORDER NO._____
SHEET_____ OF_____

CONDUIT DATA

Conduit No	Reference	Size	Type	Total Fill (mm²)	Allowable Fill (mm²)	Included Cable No.	Conductor Type
1T47	E-117	610	152.4 mm siderail solid bottom tray (2)	3785.76	38709.60	Pull rope	Soft-Fiber Polyester
						MVDSW04A	MVDS DLC
						1474-7	50 pair #18, shielded pairs, IS/OS shield 600 V, XLPE insul., PVC jacket
						1473-7	50 pair #18, shielded pairs, IS/OS shield 600 V, XLPE insul., PVC jacket
						1474-8	50 pair #18, shielded pairs, IS/OS shield 600 V, XLPE insul., PVC jacket
						1475-3C	12 Fiber, single mode fiberoptic cable
1T48	E-118	610	152.4 mm siderail solid bottom tray (2)	2157.13	38709.60		
						Pull rope	Soft-Fiber Polyester
						1474-8A	1 - 6 pair, shielded #18 with overall shield , 300 V, PVC jacket
						1474-8B	1 - 6 pair, shielded #18 with overall shield , 300 V, PVC jacket
						1474-10	50 pair #18, shielded pairs, IS/OS shield 600 V, XLPE insul., PVC jacket
						1474-8	50 pair #18, shielded pairs, IS/OS shield 600 V, XLPE insul., PVC jacket
						1473-10	50 pair #18, shielded pairs, IS/OS shield 600 V, XLPE insul., PVC jacket
1T49	E-20B, E-126 (2)	305	152.4 mm siderail solid bottom tray (2)	1849.01	19354.80	Pull rope	Soft-Fiber Polyester
						1474-4	50 pair #18, shielded pairs, IS/OS shield 600 V, XLPE insul., PVC jacket
						1475-3	72 Fiber, single mode fiberoptic riser cable
						1477-2	72 Fiber, single mode fiberoptic riser cable
1T53	E-96, E-126A, E-101 (2)	610	152.4 mm siderail solid bottom tray (2)	0.00	16774.16	Pull rope	Soft-Fiber Polyester
1T54	E-20B, E-126	610	152.4 mm siderail ladder tray	0.00	16774.16	Pull rope	Soft-Fiber Polyester
2000	E-96	41	RGS conduit	323.69	534.55	UP104-7-1	1-2/C + gnd #8,600 V, EPR insulation
						UP104-8-2	2 + 1 gnd #8,#10, 600 V, RHH/RHW insulation
2001	E-96	53	RGS conduit	809.26	879.42	UP104-9	1-2/C + gnd #10,600 V, EPR insulation
						UP104-8	1-2/C + gnd #8,600 V, EPR insulation
						UP104-6	1-2/C + gnd #8,600 V, EPR insulation
						UP104-7	1-2/C + gnd #8,600 V, EPR insulation
2002	E-96	63	RGS conduit	905.49	1663.73	UP104-8-2	2 + 1 gnd #8,#10, 600 V, RHH/RHW insulation
						UP104-6	1-2/C + gnd #8,600 V, EPR insulation
						UP104-9	1-2/C + gnd #10,600 V, EPR insulation
						UP104-7	1-2/C + gnd #8,600 V, EPR insulation
						UP104-8	1-2/C + gnd #8,600 V, EPR insulation
2003	E-96	41	RGS conduit	192.46	534.55	UP104-9-2	2 + 1 gnd #8,#10, 600 V, RHH/RHW insulation
						UP104-6A	2 + 1 gnd #8,#10, 600 V, RHH/RHW insulation
2004	E-96	53	RGS conduit	811.22	879.42	UP104-7	1-2/C + gnd #8,600 V, EPR insulation
						UP104-8-1	3 + 1 gnd #8,#10, 600 V, RHH/RHW insulation
						UP104-8-2	2 + 1 gnd #8,#10, 600 V, RHH/RHW insulation
						UP104-9	1-2/C + gnd #10,600 V, EPR insulation
						UP104-6	1-2/C + gnd #8,600 V, EPR insulation
2005	E-96	41	RGS conduit	192.46	534.55	UP104-6b	2 + 1 gnd #8,#10, 600 V, RHH/RHW insulation
						UP104-9-1	2 + 1 gnd #8,#10, 600 V, RHH/RHW insulation
2006	E-96	53	RGS conduit	811.22	879.42	UP104-9	1-2/C + gnd #10,600 V, EPR insulation
						UP104-6	1-2/C + gnd #8,600 V, EPR insulation
						UP104-8-2	2 + 1 gnd #8,#10, 600 V, RHH/RHW insulation
						UP104-8-1	3 + 1 gnd #8,#10, 600 V, RHH/RHW insulation
						UP104-7	1-2/C + gnd #8,600 V, EPR insulation
2007	E-97	41	RGS conduit	354.34	534.55	UP104-9	1-2/C + gnd #10,600 V, EPR insulation
						UP104-6	1-2/C + gnd #8,600 V, EPR insulation
2008	E-97	53	RGS conduit	456.88	879.42	UP104-8-2	2 + 1 gnd #8,#10, 600 V, RHH/RHW insulation
						UP104-8-1	3 + 1 gnd #8,#10, 600 V, RHH/RHW insulation
						UP105-7-1	1-2/C + gnd #8,600 V, EPR insulation
2009	E-97	63	RGS conduit	909.84	1663.73	UP105-7	1-2/C + gnd #8,600 V, EPR insulation
						UP105-9	1-2/C + gnd #8,600 V, EPR insulation
						UP105-10	1-2/C + gnd #8,600 V, EPR insulation
						UP105-8	1-2/C + gnd #8,600 V, EPR insulation

CONDUIT DATA

Conduit No	Reference	Size	Type	Total Fill (mm²)	Allowable Fill (mm²)	Included Cable No.	Conductor Type
2010	E-97	63	RGS conduit	1139.26	1663.73	UP104-8-2	2 + 1 gnd #8,#10, 600 V, RHH/RHW insulation
						UP104-8-1	3 + 1 gnd #8,#10, 600 V, RHH/RHW insulation
						UP105-8	1-2/C + gnd #8,600 V, EPR insulation
						UP105-7	1-2/C + gnd #8,600 V, EPR insulation
						UP105-9	1-2/C + gnd #8,600 V, EPR insulation
						UP105-10	1-2/C + gnd #8,600 V, EPR insulation
2011	E-97	41	RGS conduit	192.46	534.55	UP105-10A	2 + 1 gnd #8,#10, 600 V, RHH/RHW insulation
						UP105-9-2	2 + 1 gnd #8,#10, 600 V, RHH/RHW insulation
2012	E-97	63	RGS conduit	911.80	1663.73	UP105-9	1-2/C + gnd #8,600 V, EPR insulation
						UP105-10	1-2/C + gnd #8,600 V, EPR insulation
						UP105-8-1	3 + 1 gnd #8,#10, 600 V, RHH/RHW insulation
						UP105-7	1-2/C + gnd #8,600 V, EPR insulation
						UP105-8-2	2 + 1 gnd #8,#10, 600 V, RHH/RHW insulation
2013	E-97	41	RGS conduit	192.46	534.55	UP105-10b	2 + 1 gnd #8,#10, 600 V, RHH/RHW insulation
						UP105-9-1	2 + 1 gnd #8,#10, 600 V, RHH/RHW insulation
2014	E-97	63	RGS conduit	911.80	1663.73	UP105-10	1-2/C + gnd #8,600 V, EPR insulation
						UP105-8-1	3 + 1 gnd #8,#10, 600 V, RHH/RHW insulation
						UP105-8-2	2 + 1 gnd #8,#10, 600 V, RHH/RHW insulation
						UP105-7	1-2/C + gnd #8,600 V, EPR insulation
						UP105-9	1-2/C + gnd #8,600 V, EPR insulation
2015	E-97	41	RGS conduit	454.92	534.55	UP105-10	1-2/C + gnd #8,600 V, EPR insulation
						UP105-9	1-2/C + gnd #8,600 V, EPR insulation
2016	E-97	63	RGS conduit	229.42	1663.73	UP105-8-1	3 + 1 gnd #8,#10, 600 V, RHH/RHW insulation
						UP105-8-2	2 + 1 gnd #8,#10, 600 V, RHH/RHW insulation
2017	E-98	63	RGS conduit	909.84	1663.73	UP106-6	1-2/C + gnd #8,600 V, EPR insulation
						UP106-8	1-2/C + gnd #8,600 V, EPR insulation
						UP106-7	1-2/C + gnd #8,600 V, EPR insulation
						UP106-9	1-2/C + gnd #8,600 V, EPR insulation
2018	E-98	63	RGS conduit	1139.26	1663.73	UP106-7	1-2/C + gnd #8,600 V, EPR insulation
						UP106-9	1-2/C + gnd #8,600 V, EPR insulation
						UP106-6	1-2/C + gnd #8,600 V, EPR insulation
						UP105-8-1	3 + 1 gnd #8,#10, 600 V, RHH/RHW insulation
						UP105-8-2	2 + 1 gnd #8,#10, 600 V, RHH/RHW insulation
						UP106-8	1-2/C + gnd #8,600 V, EPR insulation
2019	E-98	41	RGS conduit	323.69	534.55	UP106-6A	1-2/C + gnd #8,600 V, EPR insulation
						UP106-9-2	2 + 1 gnd #8,#10, 600 V, RHH/RHW insulation
2020	E-98	63	RGS conduit	911.80	1663.73	UP106-6	1-2/C + gnd #8,600 V, EPR insulation
						UP106-8-1	3 + 1 gnd #8,#10, 600 V, RHH/RHW insulation
						UP106-7	1-2/C + gnd #8,600 V, EPR insulation
						UP106-8-2	2 + 1 gnd #8,#10, 600 V, RHH/RHW insulation
						UP106-9	1-2/C + gnd #8,600 V, EPR insulation

For continuation, see next sheet.

CONDUIT AND TRAY SCHEDULE

E-409

DESIGN OVERSIGHT	CALCULATED/DESIGNED BY	CHECKED BY	REVISED BY	DATE REVISED
BEHZAD GOLEMOHAMMADI	PBP	AB	DATE 8/02	8/02

STATE OF CALIFORNIA - DEPARTMENT OF TRANSPORTATION
Caltrans

LAST REVISION 00-00-00 | DATE PLOTTED => 7/11/2008 TIME PLOTTED => 3:05:43 PM

FOR REDUCED PLANS ORIGINAL SCALE IS IN MILLIMETERS 0 20 40 60 80

DGN FILE =>T:\13103\MS\pse\SAS Struc\CCO\SAS CCO42S1\CCO 42S1 Final Submittal 2008-07-11\04-0120f1_0364R02.dgn
USERNAME =>llorico

CU 04251 | EA 0120F1

DIST	COUNTY	ROUTE	KILOMETER POST TOTAL PROJECT	SHEET No	TOTAL SHEETS
04	SF	80	13.2/13.9	373 R2	1204

REGISTERED ELECTRICAL ENGINEER 12/19/02 DATE

12-6-04
PLANS APPROVAL DATE

REGISTERED PROFESSIONAL ENGINEER JENS ERLINGSSON No. 8249 Exp. 9/30/06 ELECTRICAL STATE OF CALIFORNIA

PB POWER, Inc.
A Parsons Brinckerhoff Company
303 Second St., Suite 700N
San Francisco, CA 94107-1317

The State of California or its officers or agents shall not be responsible for the accuracy or completeness of electronic copies of this plan sheet.

Caltrans now has a web site! To get to the web site, go to: http://www.dot.ca.gov

Caltrans Metric

REGISTERED PROFESSIONAL ENGINEER S. A. ESTOQUE, JR. No. E-10151 Exp. 12/31/2008 ELECTRICAL STATE OF CALIFORNIA

FOR REVISION ONLY

CONTRACT CHANGE ORDER NO._____
SHEET_____ OF_____

REQUEST FOR INFORMATION NOT ADDRESSED IN THIS CCO REMAIN IN FORCE

MARK	DATE	DESCRIPTIONS	BY	CH'D	CCO#
2	02/25/08	CABLE TRAY CHANGES	TW	RG	42S1
1	03/04/08	BARRIER MODIFICATIONS	JS BM	RG SE	44

REVISIONS

CONDUIT DATA

Conduit No	Reference	Size	Type	Total Fill (mm²)	Allowable Fill (mm²)	Included Cable No.	Conductor Type
2959	E-139	41	RGS conduit	0.00	534.55	Pull rope	Soft-Fiber Polyester
2960	E-139	41	RGS conduit	212.85	534.55	LP223-2,4A	3 + 1 gnd #6,#8, 600 V, RHH/RHW insulation
						Pull rope	Soft-Fiber Polyester
2961	E-139	41	RGS conduit	0.00	534.55	Pull rope	Soft-Fiber Polyester
2962	E-138	41	RGS conduit	0.00	534.55	Pull rope	Soft-Fiber Polyester
2963	E-138	41	RGS conduit	0.00	534.55	Pull rope	Soft-Fiber Polyester
2964	E-138	41	RGS conduit	0.00	534.55	Pull rope	Soft-Fiber Polyester
2965	E-138	41	RGS conduit	0.00	534.55	Pull rope	Soft-Fiber Polyester
2966	E-138	41	RGS conduit	0.00	534.55	Pull rope	Soft-Fiber Polyester
2967	E-138	41	RGS conduit	0.00	534.55	Pull rope	Soft-Fiber Polyester
2T13	E-181 Thru E-186	305	152.4 mm siderail ladder tray	2780.99	8387.08	Pull rope	Soft-Fiber Polyester
	E-212A 2					2391	3-1/C #4/0 + 1/C #1/0 gnd, 15kV, EPR insulation
2T14	E-212, E-21B 2	305	152.4 mm siderail ladder tray	2780.99	8387.08	Pull rope	Soft-Fiber Polyester
						2391	3-1/C #4/0 + 1/C #1/0 gnd, 15kV, EPR insulation
2T14A	E-21, E-21E	305	152.4 mm siderail ladder tray	0.00	12580.62		
2T14B	E-21, E-21E	305	152.4 mm siderail ladder tray	0.00	12580.62		
						2	
2T21	E182,E207C,E264	610	152.4 mm siderail ladder tray	0.00	16774.16		
2T23	E-181 Thru E-186	760	152.4 mm siderail ladder tray	19079.92	22580.60	2202-2	1-3/C #14,600 V, EPR insulation
	E-212A 2					A-3004-1	1-3/C + gnd #2,600 V, EPR insulation
						A-3003-1	1-3/C + gnd #4,600 V, EPR insulation
						A-2013-1	1-3/C + gnd #2,600 V, EPR insulation
						A-2012-1	1-3/C + gnd #2,600 V, EPR insulation
						2123	1-3/C + gnd #2,600 V, EPR insulation
						2202-3	1-7/C #16,600 V, EPR insulation
						2105	1-3/C + gnd #2,600 V, EPR insulation
						2106	1-3/C + gnd #2,600 V, EPR insulation
						2120-1	1-3/C #14,600 V, EPR insulation
						2120-2	1-3/C #14,600 V, EPR insulation
						2202-4	1-3/C #14,600 V, EPR insulation
						2104	1-3/C + gnd #2,600 V, EPR insulation
						2121	1-3/C + gnd #1/0,600 V, EPR insulation
						2204-1	1-3/C #16,600 V, EPR insulation
						UP204-7	1-2/C + gnd #8,600 V, EPR insulation
						2119-A	1-3/C + gnd 250 Kcmil,600 V, EPR insulation
						CCTVE01BA	TVP
						CCTVE01BB	TVCP
						CCTVE01AA	TVP
						2121-2	1-3/C #14,600 V, EPR insulation
						2201-2	1-2/C + gnd #8,600 V, EPR insulation
						2123-2	1-3/C + gnd #2/0,600 V, EPR insulation
						2123-3	1-3/C + gnd #2/0,600 V, EPR insulation
						1118	1-3/C + gnd #2/0,600 V, EPR insulation
						2095	1-3/C + gnd #2,600 V, EPR insulation
						2096	1-3/C + gnd #2,600 V, EPR insulation
						2097	1-3/C + gnd #2,600 V, EPR insulation
						2098	1-3/C + gnd #2,600 V, EPR insulation
						2099	1-3/C + gnd #2,600 V, EPR insulation
						S-3053-1	1-3/C + gnd #2,600 V, EPR insulation
						2107	1-3/C + gnd #2,600 V, EPR insulation
						2120	1-3/C + gnd #1/0,600 V, EPR insulation
						2201-6	1-2/C + gnd #8,600 V, EPR insulation
						1201-1	1-2/C + gnd #8,600 V, EPR insulation
						2202-1	1-2/C + gnd #8,600 V, EPR insulation
						2204-2	1-3/C #16,600 V, EPR insulation
						Pull rope	Soft-Fiber Polyester
						A-3041-1	1-3/C + gnd #2,600 V, EPR insulation
						S-3052-1	1-3/C + gnd #2,600 V, EPR insulation
						2125	1-3/C + gnd 250 Kcmil,600 V, EPR insulation
						2103	1-3/C + gnd #2,600 V, EPR insulation
						S-3056-9	1-4/C #14,600 V, EPR insulation
						CCTVE01AB	TVCP
						2121-1	1-3/C #14,600 V, EPR insulation
						S-3056-6	1-4/C #14,600 V, EPR insulation

CONDUIT DATA

Conduit No	Reference	Size	Type	Total Fill (mm²)	Allowable Fill (mm²)	Included Cable No.	Conductor Type
2T24	E-114, E-182	610	152.4 mm siderail ladder tray	2284.74	18064.48	LP219-2,4	1-3/C + gnd #6,600 V, EPR insulation
						LP219-6,8	1-3/C + gnd #6,600 V, EPR insulation
						Pull rope	Soft-Fiber Polyester
						UP204-7	1-2/C + gnd #8,600 V, EPR insulation
						UP204-1	1-2/C + gnd #10,600 V, EPR insulation
						UP204-8	1-2/C + gnd #8,600 V, EPR insulation
						2103	1-3/C + gnd #2,600 V, EPR insulation
						2095	1-3/C + gnd #2,600 V, EPR insulation
2T25	E-115, E-182	610	152.4 mm siderail ladder tray	3606.85	18064.48	UP205-7	1-2/C + gnd #8,600 V, EPR insulation
						UP205-1	1-2/C + gnd #10,600 V, EPR insulation
						LP220-6,8	1-3/C + gnd #6,600 V, EPR insulation
						LP220-2,4	1-3/C + gnd #6,600 V, EPR insulation
						Pull rope	Soft-Fiber Polyester
						S-3056-6	1-4/C #14,600 V, EPR insulation
						UP205-6	1-2/C + gnd #8,600 V, EPR insulation
						2202-2	1-3/C #14,600 V, EPR insulation
						2120-1	1-3/C #14,600 V, EPR insulation
						2204-2	1-3/C #16,600 V, EPR insulation
						2121-2	1-3/C #14,600 V, EPR insulation
						2096	1-3/C + gnd #2,600 V, EPR insulation
						2204-1	1-3/C #16,600 V, EPR insulation
						2104	1-3/C + gnd #2,600 V, EPR insulation
						UP205-8	1-2/C + gnd #8,600 V, EPR insulation
						2202-4	1-3/C #14,600 V, EPR insulation
						2202-3	1-7/C #16,600 V, EPR insulation
						2120-2	1-3/C #14,600 V, EPR insulation
						2121-1	1-3/C #14,600 V, EPR insulation
2T26	E-117, E-183	610	152.4 mm siderail ladder tray	3296.85	18064.48	2202-1	1-2/C + gnd #8,600 V, EPR insulation
						CCTVE01BA	TVP
						LP221-2,4	1-3/C + gnd #6,600 V, EPR insulation
						Pull rope	Soft-Fiber Polyester
						CCTVE01AB	TVCP
						CCTVE01AA	TVP
						CCTVE01BB	TVCP
						LP221-6,8	1-3/C + gnd #6,600 V, EPR insulation
						UP206-7	1-2/C + gnd #8,600 V, EPR insulation
						UP207-1	1-2/C + gnd #10,600 V, EPR insulation
						UP206-1	1-2/C + gnd #10,600 V, EPR insulation
						2202-2	1-3/C #14,600 V, EPR insulation
						2105	1-3/C + gnd #2,600 V, EPR insulation
						2097	1-3/C + gnd #2,600 V, EPR insulation
						UP206-8	1-2/C + gnd #8,600 V, EPR insulation
						2202-4	1-3/C #14,600 V, EPR insulation
						2202-3	1-7/C #16,600 V, EPR insulation

For continuation, see next sheet.

CONDUIT AND TRAY SCHEDULE

E-418

STATE OF CALIFORNIA - DEPARTMENT OF TRANSPORTATION
Caltrans

DESIGN OVERSIGHT
BEHZAD GOLEMOHAMMADI

CALCULATED/ DESIGNED BY	DATE 8/02	REVISED BY	DATE REVISED
CHECKED BY	8/02	AB	PBP

LAST REVISION 00-00-00
DATE PLOTTED => 7/11/2008
TIME PLOTTED => 3:06:06 PM

FOR REDUCED PLANS ORIGINAL SCALE IS IN MILLIMETERS 0 20 40 60 80

DGN FILE =>T:\13103\MS\pse\SAS Struc\CCO\SAS CCO42S1\CCO 42S1 Final Submittal 2008-07-11\04-0120f1_0373R02.dgn
USERNAME =>llorico

CU 04251 EA 0120F1

DIST	COUNTY	ROUTE	KILOMETER POST TOTAL PROJECT	SHEET No	TOTAL SHEETS
04	SF	80	13.2/13.9	374 R2	1204

Caltrans Metric

REGISTERED ELECTRICAL ENGINEER 12/19/02 DATE

12-6-04
PLANS APPROVAL DATE

REGISTERED PROFESSIONAL ENGINEER JENS ERLINGSSON No. 8249 Exp. 9/30/06 ELECTRICAL STATE OF CALIFORNIA

PB POWER, Inc.
A Parsons Brinckerhoff Company
303 Second St., Suite 700N
San Francisco, CA 94107-1317

The State of California or its officers or agents shall not be responsible for the accuracy or completeness of electronic copies of this plan sheet.

Caltrans now has a web site! To get to the web site, go to: http://www.dot.ca.gov

REGISTERED PROFESSIONAL ENGINEER S. A. ESTOQUE, JR. No. E-10151 Exp. 12/31/2008 ELECTRICAL STATE OF CALIFORNIA

FOR REVISION ONLY

CONTRACT CHANGE ORDER NO._____
SHEET_____ OF_____

REQUEST FOR INFORMATION NOT ADDRESSED IN THIS CCO REMAIN IN FORCE

MARK	DATE	DESCRIPTIONS	BY	CH'D	CCO#
2	02/25/08	CABLE TRAY CHANGES	TW	RG	42S1
1	03/04/08	BARRIER MODIFICATIONS	JS BM	RG SE	44

REVISIONS

CONDUIT DATA

Conduit No	Reference	Size	Type	Total Fill (mm²)	Allowable Fill (mm²)	Included Cable No.	Conductor Type
2T27	E-118, E-184	610	152.4 mm siderail ladder tray	2157.86	18064.48	LP222-6,8	1-3/C + gnd #6,600 V, EPR insulation
						2098	1-3/C + gnd #2,600 V, EPR insulation
						2106	1-3/C + gnd #2,600 V, EPR insulation
						UP207-8	1-2/C + gnd #8,600 V, EPR insulation
						UP207-7	1-2/C + gnd #8,600 V, EPR insulation
						Pull rope	Soft-Fiber Polyester
						LP222-2,4	1-3/C + gnd #6,600 V, EPR insulation
2T28	E-119, E-185	610	152.4 mm siderail ladder tray	3847.88	18064.48	UP208-4	1-2/C + gnd #8,600 V, EPR insulation
						UP208-6	1-2/C + gnd #8,600 V, EPR insulation
						Pull rope	Soft-Fiber Polyester
						LP223-2,4	1-3/C + gnd #6,600 V, EPR insulation
						UP208-2	1-2/C + gnd #8,600 V, EPR insulation
						UP208-7	1-2/C + gnd #8,600 V, EPR insulation
						2107	1-3/C + gnd #2,600 V, EPR insulation
						LP223-6,8	1-3/C + gnd #6,600 V, EPR insulation
						2201-5	1-3/C #14,600 V, EPR insulation
						UP208-8	1-2/C + gnd #8,600 V, EPR insulation
						1118-1	1-3/C #14,600 V, EPR insulation
						2201-6	1-2/C + gnd #8,600 V, EPR insulation
						S-3056-9	1-4/C #14,600 V, EPR insulation
						2099	1-3/C + gnd #2,600 V, EPR insulation
						1118-2	1-3/C #16,600 V, EPR insulation
						2201-3	1-3/C #14,600 V, EPR insulation
						2201-2	1-2/C + gnd #8,600 V, EPR insulation
						2201-4	1-9/C #16,600 V, EPR insulation
2T29	E-212, E-21B (2)	610	152.4 mm siderail ladder tray	16623.79	18064.48	2123-3	1-3/C + gnd #2/0,600 V, EPR insulation
						Pull rope	Soft-Fiber Polyester
						2119-A	1-3/C + gnd 250 kcmil,600 V, EPR insulation
						2121	1-3/C + gnd #1/0,600 V, EPR insulation
						A-3004-1	1-3/C + gnd #2,600 V, EPR insulation
						A-3003-1	1-3/C + gnd #4,600 V, EPR insulation
						A-2012-1	1-3/C + gnd #2,600 V, EPR insulation
						2123	1-3/C + gnd #2,600 V, EPR insulation
						2105	1-3/C + gnd #2,600 V, EPR insulation
						2104	1-3/C + gnd #2,600 V, EPR insulation
						2125	1-3/C + gnd 250 kcmil,600 V, EPR insulation
						2123-2	1-3/C + gnd #2/0,600 V, EPR insulation
						2106	1-3/C + gnd #2,600 V, EPR insulation
						1118	1-3/C + gnd #2/0,600 V, EPR insulation
						2095	1-3/C + gnd #2,600 V, EPR insulation
						2096	1-3/C + gnd #2,600 V, EPR insulation
						2097	1-3/C + gnd #2,600 V, EPR insulation
						2098	1-3/C + gnd #2,600 V, EPR insulation
						2099	1-3/C + gnd #2,600 V, EPR insulation
						2103	1-3/C + gnd #2,600 V, EPR insulation
						2107	1-3/C + gnd #2,600 V, EPR insulation
						A-3041-1	1-3/C + gnd #2,600 V, EPR insulation
						S-3053-1	1-3/C + gnd #2,600 V, EPR insulation
						S-3052-1	1-3/C + gnd #2,600 V, EPR insulation
						2120	1-3/C + gnd #1/0,600 V, EPR insulation
						A-2013-1	1-3/C + gnd #2,600 V, EPR insulation
2T33	E-181 Thru E-186, E-212A (2)	760	152.4 mm siderail ladder tray	18689.05	22580.60	A-2011-1	1-3/C + gnd #2,600 V, EPR insulation
						UP208-4	1-2/C + gnd #8,600 V, EPR insulation
						UP208-6	1-2/C + gnd #8,600 V, EPR insulation
						Pull rope	Soft-Fiber Polyester
						LP219-2,4	1-3/C + gnd #6,600 V, EPR insulation
						LP219-6,8	1-3/C + gnd #6,600 V, EPR insulation
						LP220-2,4	1-3/C + gnd #6,600 V, EPR insulation
						LP220-6,8	1-3/C + gnd #6,600 V, EPR insulation
						LP221-2,4	1-3/C + gnd #6,600 V, EPR insulation
						UP205-6	1-2/C + gnd #8,600 V, EPR insulation
						A-3057-1	1-3/C + gnd #2,600 V, EPR insulation
						A-2014-1	1-3/C + gnd #2,600 V, EPR insulation
						UP204-8	1-2/C + gnd #8,600 V, EPR insulation
						UP205-8	1-2/C + gnd #8,600 V, EPR insulation
						UP207-8	1-2/C + gnd #8,600 V, EPR insulation
						UP205-1	1-2/C + gnd #10,600 V, EPR insulation
						UP207-7	1-2/C + gnd #8,600 V, EPR insulation
						A-3039-3	1-3/C + gnd #6,600 V, EPR insulation
						A-3040-3	1-3/C + gnd #6,600 V, EPR insulation
						A-3005-1	1-3/C + gnd #2,600 V, EPR insulation
						A-3006-1	1-3/C + gnd #4,600 V, EPR insulation
						A-3031-1	1-3/C + gnd #4,600 V, EPR insulation

CONDUIT DATA

Conduit No	Reference	Size	Type	Total Fill (mm²)	Allowable Fill (mm²)	Included Cable No.	Conductor Type
						A-3032-1	1-3/C + gnd #4,600 V, EPR insulation
						A-3039-1	1-3/C + gnd #2,600 V, EPR insulation
						A-3040-1	1-3/C + gnd #2,600 V, EPR insulation
						LP221-6,8	1-3/C + gnd #6,600 V, EPR insulation
						UP204-1	1-2/C + gnd #10,600 V, EPR insulation
						UP206-8	1-2/C + gnd #8,600 V, EPR insulation
						S-2032-1	1-3/C + gnd #4,600 V, EPR insulation
						A-3036-1	1-3/C + gnd #4,600 V, EPR insulation
						A-2035-1	1-3/C + gnd #6,600 V, EPR insulation
						A-2035-3	1-3/C + gnd #6,600 V, EPR insulation
						UP205-7	1-2/C + gnd #8,600 V, EPR insulation
						UP206-7	1-2/C + gnd #8,600 V, EPR insulation
						LP223-2,4	1-3/C + gnd #6,600 V, EPR insulation
						LP222-6,8	1-3/C + gnd #6,600 V, EPR insulation
						A-3035-1	1-3/C + gnd #4,600 V, EPR insulation
						A-3034-1	1-3/C + gnd #2,600 V, EPR insulation
						UP208-2	1-2/C + gnd #8,600 V, EPR insulation
						UP207-1	1-2/C + gnd #10,600 V, EPR insulation
						S-2031-1	1-3/C + gnd #2,600 V, EPR insulation
						UP206-1	1-2/C + gnd #10,600 V, EPR insulation
						1118-1	1-3/C #14,600 V, EPR insulation
						1118-2	1-3/C #16,600 V, EPR insulation
						1201-2	1-2/C + gnd #8,600 V, EPR insulation
						LP223-6,8	1-3/C + gnd #6,600 V, EPR insulation
						UP208-7	1-2/C + gnd #8,600 V, EPR insulation
						LP222-2,4	1-3/C + gnd #6,600 V, EPR insulation
						1201-6	1-2/C + gnd #8,600 V, EPR insulation
						A-3043-1	1-3/C + gnd #2,600 V, EPR insulation
						A-3042-1	1-3/C + gnd #2,600 V, EPR insulation
						2119-B	1-3/C + gnd 250 kcmil,600 V, EPR insulation
						A-3033-1	1-3/C + gnd #2,600 V, EPR insulation
						UP208-8	1-2/C + gnd #8,600 V, EPR insulation
2T39	E-212, E-21	610	152.4 mm siderail ladder tray	9889.17	18064.48	A-3032-1	1-3/C + gnd #4,600 V, EPR insulation
						2119-B	1-3/C + gnd 250 kcmil,600 V, EPR insulation
						A-2035-1	1-3/C + gnd #6,600 V, EPR insulation
						S-2032-1	1-3/C + gnd #4,600 V, EPR insulation
						S-2031-1	1-3/C + gnd #2,600 V, EPR insulation
						A-3036-1	1-3/C + gnd #4,600 V, EPR insulation
						A-3035-1	1-3/C + gnd #4,600 V, EPR insulation
						A-3034-1	1-3/C + gnd #2,600 V, EPR insulation
						A-3033-1	1-3/C + gnd #2,600 V, EPR insulation
						Pull rope	Soft-Fiber Polyester
						A-3039-1	1-3/C + gnd #2,600 V, EPR insulation
						A-3042-1	1-3/C + gnd #2,600 V, EPR insulation
						A-3031-1	1-3/C + gnd #4,600 V, EPR insulation
						A-3006-1	1-3/C + gnd #4,600 V, EPR insulation
						A-3005-1	1-3/C + gnd #2,600 V, EPR insulation
						A-2014-1	1-3/C + gnd #2,600 V, EPR insulation
						A-2011-1	1-3/C + gnd #2,600 V, EPR insulation
						A-3057-1	1-3/C + gnd #2,600 V, EPR insulation
						A-3043-1	1-3/C + gnd #2,600 V, EPR insulation
						A-3040-1	1-3/C + gnd #2,600 V, EPR insulation

For continuation, see next sheet.

CONDUIT AND TRAY SCHEDULE

E-419

STATE OF CALIFORNIA - DEPARTMENT OF TRANSPORTATION
Caltrans

DESIGN OVERSIGHT
BEHZAD GOLEMOHAMMADI

CALCULATED/ DESIGNED BY	PBP	DATE 8/02	REVISED BY	DATE REVISED
CHECKED BY	AB	8/02		

LAST REVISION 00-00-00
DATE PLOTTED => 7/11/2008
TIME PLOTTED => 3:06:22 PM

DIST	COUNTY	ROUTE	KILOMETER POST TOTAL PROJECT	SHEET No	TOTAL SHEETS
04	SF	80	13.2/13.9	375 R2	1204

REGISTERED ELECTRICAL ENGINEER 12/19/02 DATE

12-6-04
PLANS APPROVAL DATE

REGISTERED PROFESSIONAL ENGINEER JENS ERLINGSSON No. 8249 Exp. 9/30/06 ELECTRICAL STATE OF CALIFORNIA

PB POWER, Inc.
A Parsons Brinckerhoff Company
303 Second St., Suite 700N
San Francisco, CA 94107-1317

The State of California or its officers or agents shall not be responsible for the accuracy or completeness of electronic copies of this plan sheet.

Caltrans now has a web site! To get to the web site, go to: http://www.dot.ca.gov

Caltrans Metric

REGISTERED PROFESSIONAL ENGINEER S. A. ESTOQUE, JR. No. E-10151 Exp. 12/31/2008 ELECTRICAL STATE OF CALIFORNIA

FOR REVISION ONLY

REQUEST FOR INFORMATION NOT ADDRESSED IN THIS CCO REMAIN IN FORCE

MARK	DATE	DESCRIPTIONS	BY	CH'D	CCO#
2	02/25/08	CABLE TRAY CHANGES	TW	RG	42S1
1	03/04/08	BARRIER MODIFICATIONS	JS BM	RG SE	44

REVISIONS

CONTRACT CHANGE ORDER NO._____
SHEET_____ OF_____

CONDUIT DATA

Conduit No	Reference	Size	Type	Total Fill (mm²)	Allowable Fill (mm²)	Included Cable No.	Conductor Type
2T43	E-181 Thru E-186 E-212A 2	610	152.4 mm siderail solid bottom tray 2	10169.05	38709.60	2900-152C	4 pair #22, shielded pairs, FEP insulation
						2900-292A	4 pair #22, shielded pairs, FEP insulation
						2900-272C	4 pair #22, shielded pairs, FEP insulation
						2900-272B	4 pair #22, shielded pairs, FEP insulation
						2900-272A	4 pair #22, shielded pairs, FEP insulation
						2900-192C	4 pair #22, shielded pairs, FEP insulation
						2900-192B	4 pair #22, shielded pairs, FEP insulation
						2900-192A	4 pair #22, shielded pairs, FEP insulation
						2900-172C	4 pair #22, shielded pairs, FEP insulation
						2900-172B	4 pair #22, shielded pairs, FEP insulation
						2900-172A	4 pair #22, shielded pairs, FEP insulation
						1473-6	50 pair #18, shielded pairs, IS/OS shield 600 V, XLPE insul., PVC jacket
						2900-162A	4 pair #22, shielded pairs, FEP insulation
						2900-332C	4 pair #22, shielded pairs, FEP insulation
						2900-152B	4 pair #22, shielded pairs, FEP insulation
						2900-152A	4 pair #22, shielded pairs, FEP insulation
						2900-142A	4 pair #22, shielded pairs, FEP insulation
						2910-8	4 pair #22, shielded pairs, 300 V, PE insulation
						2119-2	4 pair #22, shielded pairs, 300 V, PE insulation
						2475-3C	12 Fiber, single mode fiberoptic cable
						MVDSE03A	MVDS DLC
						MVDSE01A	MVDS DLC
						MVDSE02A	MVDS DLC
						2149	1 - 2 pair, shielded #18 with IS/OA, 300 V, PVC jacket
						2154	1 - 2 pair, shielded #18 with IS/OA, 300 V, PVC jacket
						2900-162B	4 pair #22, shielded pairs, FEP insulation
						2900-442A	4 pair #22, shielded pairs, FEP insulation
						2474-10	50 pair #18, shielded pairs, IS/OS shield 600 V, XLPE insul., PVC jacket
						1474-6	50 pair #18, shielded pairs, IS/OS shield 600 V, XLPE insul., PVC jacket
						1473-4	50 pair #18, shielded pairs, IS/OS shield 600 V, XLPE insul., PVC jacket
						2910-7	4 pair #24, overall shielded, 300V, PE insulation
						2910-3	4 pair #22, shielded pairs, FEP insulation
						2910-2	4 pair #22, shielded pairs, FEP insulation
						2910-12	4 pair #22, shielded pairs, 300 V, PE insulation
						2910-11	1-3/C #16,600 V, EPR insulation
						2900-482A	4 pair #22, shielded pairs, FEP insulation
						2900-452B	4 pair #22, shielded pairs, FEP insulation
						2900-452A	4 pair #22, shielded pairs, FEP insulation
						2900-332A	4 pair #22, shielded pairs, FEP insulation
						2900-442B	4 pair #22, shielded pairs, FEP insulation
						2900-332B	4 pair #22, shielded pairs, FEP insulation
						2900-432A	4 pair #22, shielded pairs, FEP insulation
						2900-422B	4 pair #22, shielded pairs, FEP insulation
						2900-422A	4 pair #22, shielded pairs, FEP insulation
						2900-412C	4 pair #22, shielded pairs, FEP insulation
						2900-412B	4 pair #22, shielded pairs, FEP insulation
						2900-412A	4 pair #22, shielded pairs, FEP insulation
						2900-402A	4 pair #22, shielded pairs, FEP insulation
						2900-382C	4 pair #22, shielded pairs, FEP insulation
						2900-382B	4 pair #22, shielded pairs, FEP insulation
						2900-382A	4 pair #22, shielded pairs, FEP insulation
						2148	1 - 2 pair, shielded #18 with IS/OA, 300 V, PVC jacket
						2900-442C	4 pair #22, shielded pairs, FEP insulation
						CCTVE01AD	TVL
						1473-8	50 pair #18, shielded pairs, IS/OS shield 600 V, XLPE insul., PVC jacket
						Pull rope	Soft-Fiber Polyester
						2475-3A	12 Fiber, single mode fiberoptic cable
						2475-3B	12 Fiber, single mode fiberoptic cable
						2475-3	72 Fiber, single mode fiberoptic riser cable
						CCTVE01BC	TVC
						CCTVE01BD	TVL
						CCTVE01AC	TVC
						2900-432B	4 pair #22, shielded pairs, FEP insulation
						2155	1 - 2 pair, shielded #18 with IS/OA, 300 V, PVC jacket

CONDUIT DATA

Conduit No	Reference	Size	Type	Total Fill (mm²)	Allowable Fill (mm²)	Included Cable No.	Conductor Type
						MVDSW03A	MVDS DLC
2T44	E-115, E-182	610	152.4 mm siderail solid bottom tray 2	5109.21	38709.60	2119-2	4 pair #22, shielded pairs, 300 V, PE insulation
						1473-4	50 pair #18, shielded pairs, IS/OS shield 600 V, XLPE insul., PVC jacket
						1474-5	50 pair #18, shielded pairs, IS/OS shield 600 V, XLPE insul., PVC jacket
						1474-4	50 pair #18, shielded pairs, IS/OS shield 600 V, XLPE insul., PVC jacket
						Pull rope	Soft-Fiber Polyester
						MVDSE01A	MVDS DLC
						2475-3A	12 Fiber, single mode fiberoptic cable
						1473-5	50 pair #18, shielded pairs, IS/OS shield 600 V, XLPE insul., PVC jacket
2T45	E-115, E-182	610	152.4 mm siderail solid bottom tray 2	7529.12	38709.60	2900-432B	4 pair #22, shielded pairs, FEP insulation
						2910-12	4 pair #22, shielded pairs, 300 V, PE insulation
						Pull rope	Soft-Fiber Polyester
						2900-412A	4 pair #22, shielded pairs, FEP insulation
						2910-11	1-3/C #16,600 V, EPR insulation
						2910-7	4 pair #24, overall shielded, 30V, PE insulation
						2910-10	4 pair #22, shielded pairs, 300 V, PE insulation
						2910-8	4 pair #22, shielded pairs, 300 V, PE insulation
						2900-422B	4 pair #22, shielded pairs, FEP insulation
						2900-422A	4 pair #22, shielded pairs, FEP insulation
						2900-412C	4 pair #22, shielded pairs, FEP insulation
						2900-412B	4 pair #22, shielded pairs, FEP insulation
						2900-382C	4 pair #22, shielded pairs, FEP insulation
						2900-402A	4 pair #22, shielded pairs, FEP insulation
						2900-272C	4 pair #22, shielded pairs, FEP insulation
						2900-382B	4 pair #22, shielded pairs, FEP insulation
						2900-382A	4 pair #22, shielded pairs, FEP insulation
						2900-332C	4 pair #22, shielded pairs, FEP insulation
						2900-332B	4 pair #22, shielded pairs, FEP insulation
						2900-332A	4 pair #22, shielded pairs, FEP insulation
						2900-292A	4 pair #22, shielded pairs, FEP insulation
						2900-172A	4 pair #22, shielded pairs, FEP insulation
						2900-192B	4 pair #22, shielded pairs, FEP insulation
						2900-142A	4 pair #22, shielded pairs, FEP insulation
						1474-5A	1 - 6 pair, shielded #18 with overall shield, 300 V, PVC jacket
						2910-3	4 pair #22, shielded pairs, FEP insulation
						2910-2	4 pair #22, shielded pairs, FEP insulation
						2900-482A	4 pair #22, shielded pairs, FEP insulation
						2900-452B	4 pair #22, shielded pairs, FEP insulation
						2155	1 - 2 pair, shielded #18 with IS/OA, 300 V, PVC jacket

For continuation, see next sheet

CONDUIT AND TRAY SCHEDULE

E-420

STATE OF CALIFORNIA - DEPARTMENT OF TRANSPORTATION
Caltrans

DESIGN OVERSIGHT
BEHZAD GOLEMOHAMMADI

CALCULATED/ DESIGNED BY	PBP	DATE 8/02	REVISED BY	DATE REVISED
CHECKED BY	AB	8/02		

LAST REVISION 00-00-00
DATE PLOTTED => 7/11/2008
TIME PLOTTED => 3:06:45 PM

FOR REDUCED PLANS ORIGINAL SCALE IS IN MILLIMETERS 0 20 40 60 80

DGN FILE =>T:\13103\MS\pse\SAS Struc\CCO\SAS CCO42S1\CCO 42S1 Final Submittal 2008-07-11\04-0120f1_0375R02.dgn
USERNAME =>llorico
CU 04251
EA 0120F1

DIST	COUNTY	ROUTE	KILOMETER POST TOTAL PROJECT	SHEET No	TOTAL SHEETS
04	SF	80	13.2/13.9	376 R2	1204

REGISTERED ELECTRICAL ENGINEER 12/19/02 DATE

12-6-04
PLANS APPROVAL DATE

REGISTERED PROFESSIONAL ENGINEER JENS ERLINGSSON No. 8249 Exp. 9/30/06 ELECTRICAL STATE OF CALIFORNIA

PB POWER, Inc.
A Parsons Brinckerhoff Company
303 Second St., Suite 700N
San Francisco, CA 94107-1317

The State of California or its officers or agents shall not be responsible for the accuracy or completeness of electronic copies of this plan sheet.

Caltrans now has a web site! To get to the web site, go to http://www.dot.ca.gov

Caltrans Metric

REGISTERED PROFESSIONAL ENGINEER S. A. ESTOQUE, JR. No. E-10151 Exp. 12/31/2008 ELECTRICAL STATE OF CALIFORNIA

FOR REVISION ONLY

REQUEST FOR INFORMATION NOT ADDRESSED IN THIS CCO REMAIN IN FORCE

MARK	DATE	DESCRIPTIONS	BY	CH'D	CCO#
2	02/25/08	CABLE TRAY CHANGES	TW	RG	42S1
1	03/04/08	BARRIER MODIFICATIONS	JS BM	RG SE	44

REVISIONS

CONTRACT CHANGE ORDER NO._____
SHEET_____ OF_____

CONDUIT DATA

Conduit No	Reference	Size	Type	Total Fill (mm²)	Allowable Fill (mm²)	Included Cable No.	Conductor Type
						2900-452A	4 pair #22, shielded pairs, FEP insulation
						2900-442A	4 pair #22, shielded pairs, FEP insulation
						2900-442C	4 pair #22, shielded pairs, FEP insulation
						2900-442B	4 pair #22, shielded pairs, FEP insulation
						2900-272A	4 pair #22, shielded pairs, FEP insulation
						2900-162A	4 pair #22, shielded pairs, FEP insulation
						2900-192C	4 pair #22, shielded pairs, FEP insulation
						1474-5	50 pair #18, shielded pairs, IS/OS shield 600 V, XLPE insul., PVC jacket
						2900-432A	4 pair #22, shielded pairs, FEP insulation
						2900-192A	4 pair #22, shielded pairs, FEP insulation
						2900-172C	4 pair #22, shielded pairs, FEP insulation
						2900-172B	4 pair #22, shielded pairs, FEP insulation
						2900-162B	4 pair #22, shielded pairs, FEP insulation
						2900-152C	4 pair #22, shielded pairs, FEP insulation
						2900-152B	4 pair #22, shielded pairs, FEP insulation
						2900-152A	4 pair #22, shielded pairs, FEP insulation
						1474-5B	1 - 6 pair, shielded #18 with overall shield, 300 V, PVC jacket
						1474-6	50 pair #18, shielded pairs, IS/OS shield 600 V, XLPE insul., PVC jacket
						1473-5	50 pair #18, shielded pairs, IS/OS shield 600 V, XLPE insul., PVC jacket
						1473-6	50 pair #18, shielded pairs, IS/OS shield 600 V, XLPE insul., PVC jacket
						2900-272B	4 pair #22, shielded pairs, FEP insulation
2T46	E-115, E-183	610	152.4 mm siderail solid bottom tray 2	5485.55	38709.60	1474-6	50 pair #18, shielded pairs, IS/OS shield 600 V, XLPE insul., PVC jacket
						Pull rope	Soft-Fiber Polyester
						MVDSE02A	MVDS DLC
						CCTVE01AD	TVL
						CCTVE01AC	TVC
						MVDSW03A	MVDS DLC
						CCTVE01BD	TVL
						CCTVE01BC	TVC
						1473-7	50 pair #18, shielded pairs, IS/OS shield 600 V, XLPE insul., PVC jacket
						1474-7	50 pair #18, shielded pairs, IS/OS shield 600 V, XLPE insul., PVC jacket
						1473-6	50 pair #18, shielded pairs, IS/OS shield 600 V, XLPE insul., PVC jacket
						2475-3B	12 Fiber, single mode fiberoptic cable
2T47	E-117, E-184	610	152.4 mm siderail solid bottom tray 2	4987.47	38709.60	1474-7	50 pair #18, shielded pairs, IS/OS shield 600 V, XLPE insul., PVC jacket
						MVDSE03A	MVDS DLC
						2475-3C	12 Fiber, single mode fiberoptic cable
						1473-8	50 pair #18, shielded pairs, IS/OS shield 600 V, XLPE insul., PVC jacket
						1473-7	50 pair #18, shielded pairs, IS/OS shield 600 V, XLPE insul., PVC jacket
						1474-8	50 pair #18, shielded pairs, IS/OS shield 600 V, XLPE insul., PVC jacket
						Pull rope	Soft-Fiber Polyester
2T48	E-118, E-185	610	152.4 mm siderail solid bottom tray 2	6718.75	38709.60	Pull rope	Soft-Fiber Polyester
						1474-10	50 pair #18, shielded pairs, IS/OS shield 600 V, XLPE insul., PVC jacket
						1474-8A	1 - 6 pair, shielded #18 with overall shield, 300 V, PVC jacket
						1474-8B	1 - 6 pair, shielded #18 with overall shield, 300 V, PVC jacket
						1474-8	50 pair #18, shielded pairs, IS/OS shield 600 V, XLPE insul., PVC jacket
						2154	1 - 2 pair, shielded #18 with IS/OA, 300 V, PVC jacket
						2148	1 - 2 pair, shielded #18 with IS/OA, 300 V, PVC jacket
						2149	1 - 2 pair, shielded #18 with IS/OA, 300 V, PVC jacket
						1473-10	50 pair #18, shielded pairs, IS/OS shield 600 V, XLPE insul., PVC jacket
						1473-8	50 pair #18, shielded pairs, IS/OS shield 600 V, XLPE insul., PVC jacket
						2474-10	50 pair #18, shielded pairs, IS/OS shield 600 V, XLPE insul., PVC jacket
						2150	1 - 2 pair, shielded #18 with IS/OA, 300 V, PVC jacket

CONDUIT DATA

Conduit No	Reference	Size	Type	Total Fill (mm²)	Allowable Fill (mm²)	Included Cable No.	Conductor Type
2T49	E-212, E-21B 2	305	152.4 mm siderail ladder tray	1904.72	19354.80	Pull rope	Soft-Fiber Polyester
						2900-152A	4 pair #22, shielded pairs, FEP insulation
						2900-152C	4 pair #22, shielded pairs, FEP insulation
						2900-162A	4 pair #22, shielded pairs, FEP insulation
						2900-162B	4 pair #22, shielded pairs, FEP insulation
						2910-2	4 pair #22, shielded pairs, FEP insulation
						2910-3	4 pair #22, shielded pairs, FEP insulation
						1473-4	50 pair #18, shielded pairs, IS/OS shield 600 V, XLPE insul., PVC jacket
						2475-3	72 Fiber, single mode fiberoptic riser cable
						2900-152B	4 pair #22, shielded pairs, FEP insulation
						2900-142A	4 pair #22, shielded pairs, FEP insulation
2T53	E-181 Thru E-186, E-212A 2	610	152.4 mm siderail solid bottom tray	0.00	38709.60	Pull rope	Soft-Fiber Polyester
2T54	E-212, E-21B 2	610	152.4 mm siderail ladder tray	0.00	16774.16	Pull rope	Soft-Fiber Polyester
3000		41	RGS conduit	323.69	534.55	UP204-8-2	2 + 1gnd #8,#10, 600 V, RHH/RHW insulation
						UP204-7-1	1-2/C + gnd #8,600 V, EPR insulation
3001		41	RGS conduit	454.92	534.55	UP204-7	1-2/C + gnd #8,600 V, EPR insulation
						UP204-8	1-2/C + gnd #8,600 V, EPR insulation
3002		53	RGS conduit	684.34	879.42	UP204-7	1-2/C + gnd #8,600 V, EPR insulation
						UP205-7-1	1-2/C + gnd #8,600 V, EPR insulation
						UP204-8-2	2 + 1gnd #8,#10, 600 V, RHH/RHW insulation
						UP204-8-1	3 + 1gnd #8,#10, 600 V, RHH/RHW insulation
3003		41	RGS conduit	454.92	534.55	UP205-8	1-2/C + gnd #8,600 V, EPR insulation
						UP205-7	1-2/C + gnd #8,600 V, EPR insulation
3004		53	RGS conduit	684.34	879.42	UP205-8-2	2 + 1gnd #8,#10, 600 V, RHH/RHW insulation
						UP205-8-1	3 + 1gnd #8,#10, 600 V, RHH/RHW insulation
						UP206-7-1	1-2/C + gnd #8,600 V, EPR insulation
						UP205-7	1-2/C + gnd #8,600 V, EPR insulation
3005		41	RGS conduit	454.92	534.55	UP206-8	1-2/C + gnd #8,600 V, EPR insulation
						UP206-7	1-2/C + gnd #8,600 V, EPR insulation
3006		53	RGS conduit	684.34	879.42	UP206-7	1-2/C + gnd #8,600 V, EPR insulation
						UP207-7-1	1-2/C + gnd #8,600 V, EPR insulation
						UP206-8-1	3 + 1gnd #8,#10, 600 V, RHH/RHW insulation
						UP206-8-2	2 + 1gnd #8,#10, 600 V, RHH/RHW insulation
3007		41	RGS conduit	454.92	534.55	UP207-8	1-2/C + gnd #8,600 V, EPR insulation
						UP207-7	1-2/C + gnd #8,600 V, EPR insulation
3008		53	RGS conduit	684.34	879.42	UP207-8-2	2 + 1gnd #8,#10, 600 V, RHH/RHW insulation
						UP207-8-1	3 + 1gnd #8,#10, 600 V, RHH/RHW insulation
						UP207-7	1-2/C + gnd #8,600 V, EPR insulation
						UP208-7-1	1-2/C + gnd #8,600 V, EPR insulation
3009		41	RGS conduit	454.92	534.55	UP208-8	1-2/C + gnd #8,600 V, EPR insulation
						UP208-7	1-2/C + gnd #8,600 V, EPR insulation

For continuation, see next sheet.

CONDUIT AND TRAY SCHEDULE

E-421

ALL DIMENSIONS ARE IN MILLIMETERS UNLESS OTHERWISE SHOWN

STATE OF CALIFORNIA - DEPARTMENT OF TRANSPORTATION
Caltrans

DESIGN OVERSIGHT
BEHZAD GOLEMOHAMMADI

CALCULATED/ DESIGNED BY	PBP	DATE 8/02	REVISED BY	DATE REVISED
CHECKED BY	AB	8/02		

FOR REDUCED PLANS ORIGINAL SCALE IS IN MILLIMETERS 0 20 40 60 80

DGN FILE =>T:\13103\MS\pse\SAS Struc\CCO\SAS CCO42S1\CCO 42S1 Final Submittal 2008-07-11\04-0120f1_0376R02.dgn
USERNAME =>llorico

CU 04251 EA 0120F1

LAST REVISION 00-00-00 DATE PLOTTED => 7/11/2008 TIME PLOTTED => 3:07:08 PM

DIST	COUNTY	ROUTE	KILOMETER POST TOTAL PROJECT	SHEET No	TOTAL SHEETS
04	SF	80	13.2/13.9	376 S1	1204

REGISTERED ELECTRICAL ENGINEER 2/22/08 DATE

PLANS APPROVAL DATE

REGISTERED PROFESSIONAL ENGINEER S. A. ESTOQUE, JR. No. E-10151 Exp. 12/31/2008 ELECTRICAL STATE OF CALIFORNIA

PB AMERICAS, Inc.
A Parsons Brinckerhoff Company
303 Second St., Suite 700N
San Francisco, CA 94107-1317

The State of California or its officers or agents shall not be responsible for the accuracy or completeness of electronic copies of this plan sheet.

Caltrans now has a web site! To get to the web site, go to http://www.dot.ca.gov

Caltrans Metric

REQUEST FOR INFORMATION NOT ADDRESSED IN THIS CCO REMAIN IN FORCE

MARK	DATE	DESCRIPTIONS	BY	CH'D	CCO#
0	02/25/08	CABLE TRAY CHANGES	RR TW	RG	42S1

REVISIONS

CONTRACT CHANGE ORDER NO._____
SHEET _____ OF _____

CONDUIT DATA

Conduit No	Reference	Size	Type	Total Fill (mm²)	Allowable Fill (mm²)	Included Cable No.	Conductor Type
2T54A	E-21,E-21E	610	152.4 mm siderail solid bottom tray	0.00	16774.16	Pull rope	Soft-Fiber Polyester
2T54B	E-21,E-21E	610	152.4 mm siderail ladder tray	0.00	16774.16	Pull rope	Soft-Fiber Polyester
2T29A	E-21,E-21E	610	152.4 mm siderail ladder tray	0.00	16774.16		
2T29B	E-21,E-21E	610	152.4 mm siderail ladder tray	0.00	16774.16		
2T39A	E-21,E-21E	610	152.4 mm siderail ladder tray	0.00	16774.16		
2T39B	E-21,E-21E	610	152.4 mm siderail ladder tray	0.00	16774.16		
2T41	E182,E207C,E264	305	152.4 mm siderail solid bottom tray	0.00	8387.08		
2T43A	E-212A	305	152.4 mm siderail solid bottom tray	0.00	8387.08		
2T43B	E-212A	305	152.4 mm siderail solid bottom tray	0.00	8387.08		
2T49A	E-21,E-21E	610	152.4 mm siderail solid bottom tray	0.00	16774.16		
2T49B	E-21,E-21E	610	152.4 mm siderail ladder tray	0.00	16774.16		

CONDUIT DATA

Conduit No	Reference	Size	Type	Total Fill (mm²)	Allowable Fill (mm²)	Included Cable No.	Conductor Type

For continuation, see next sheet.

CONDUIT AND TRAY SCHEDULE

E-421A

DATE	REVISED BY	DATE REVISED

CALCULATED/DESIGNED BY
CHECKED BY

DESIGN OVERSIGHT
BEHZAD GOLEMOHAMMADI

STATE OF CALIFORNIA - DEPARTMENT OF TRANSPORTATION
Caltrans

LAST REVISION 00-00-00
DATE PLOTTED => 7/11/2008
TIME PLOTTED => 3:07:24 PM

FOR REDUCED PLANS ORIGINAL SCALE IS IN MILLIMETERS 0 20 40 60 80

DGN FILE =>T:\13103\MS\pse\SAS Struc\CCO\SAS CCO42S1\CCO 42S1 Final Submittal 2008-07-11\04-0120f1_0376S01.dgn
USERNAME =>llorico

CU 04251 EA 0120F1

DIST	COUNTY	ROUTE	KILOMETER POST TOTAL PROJECT	SHEET No	TOTAL SHEETS
04	SF	80	13.2/13.9	407 R2	1204

REGISTERED ELECTRICAL ENGINEER 12/19/02 DATE

12-6-04
PLANS APPROVAL DATE

REGISTERED PROFESSIONAL ENGINEER JENS ERLINGSSON No. 8249 Exp. 9/30/06 ELECTRICAL STATE OF CALIFORNIA

PB POWER, Inc.
A Parsons Brinckerhoff Company
303 Second St., Suite 700N
San Francisco, CA 94107-1317

The State of California or its officers or agents shall not be responsible for the accuracy or completeness of electronic copies of this plan sheet.

Caltrans now has a web site! To get to the web site, go to http://www.dot.ca.gov

Caltrans Metric

REQUEST FOR INFORMATION NOT ADDRESSED IN THIS CCO REMAIN IN FORCE

MARK	DATE	DESCRIPTIONS	BY	CH'D	CCO#
2	02/25/08	CABLE TRAY CHANGES	RG	SE	42S1
1	02/19/08	ELECTRICAL MODIFICATIONS	MP EL	RR	42

REVISIONS

CONTRACT CHANGE ORDER NO._____
SHEET _____ OF _____

REGISTERED PROFESSIONAL ENGINEER S. A. ESTOQUE, JR. No. E-10151 Exp. 12/31/2008 ELECTRICAL STATE OF CALIFORNIA

FOR REVISION ONLY

CONDUIT DATA

Conduit No	Reference	Size	Type	Total Fill (mm²)	Allowable Fill (mm²)	Included Cable No.	Conductor Type
3177A	E-264A	78	Liquidtight flex metal conduit	1853.73	1928.98	2119-B	3+1gnd, #250 kcmil, #1/0, 600V, EPR insulation
						2204-2	1-3/C #16, 600V, EPR Insulation
						1201-2	1-2/C + gnd #8, 600V, EPR Insulation
						A-3057-1	1-3/C + gnd #2, 600V, EPR Insulation
3177B	E-264A (2)	78	RGS - PVC coated conduit	1853.73	1935.24	2119-B	3+1gnd, #250 kcmil, #1/0, 600V, EPR insulation
						2204-2	1-3/C #16, 600V, EPR Insulation
						1201-2	1-2/C + gnd #8, 600V, EPR Insulation
						A-3057-1	1-3/C + gnd #2, 600V, EPR Insulation
3278A	E-264A	78	Liquidtight flex metal conduit	1827.85	1928.98	2123-2	1-3/C + gnd #2/0, 600V, EPR Insulation
						2123-3	1-3/C + gnd #2/0, 600V, EPR Insulation
						2910-11	1-3/C #16, 600V, EPR Insulation
3278B	E-264A (2)	78	RGS - PVC coated conduit	1827.85	1953.24	2123-2	1-3/C + gnd #2/0, 600V, EPR Insulation
						2123-3	1-3/C + gnd #2/0, 600V, EPR Insulation
						2910-11	1-3/C #16, 600V, EPR Insulation
3294A	E-264A	78	Liquidtight flex metal conduit		1928.98	Pull rope	Soft-fiber polyester
3294B	E-264A (2)	78	RGS - PVC coated conduit		1935.24	Pull rope	Soft-fiber polyester
3294C	E-287	41	RGS - PVC coated conduit	170.36	534.55	2120-1	1-3/C #14, 600V, EPR Insulation
						2120-2	1-3/C #14, 600V, EPR Insulation
3319A	E-264A	78	Liquidtight flex metal conduit	1849.08	1928.98	2121	1-3/C + gnd #1/0, 600V, EPR Insulation
						2121-1	1-3/C #14, 600V, EPR Insulation
						2120	1-3/C + gnd #1/0, 600V, EPR Insulation
						2121-2	1-3/C #14, 600V, EPR Insulation
						2120-1	1-3/C #14, 600V, EPR Insulation
						2120-2	1-3/C #14, 600V, EPR Insulation
3319B	E-264A (2)	78	RGS - PVC coated conduit	1849.08	1935.24	2121	1-3/C + gnd #1/0, 600V, EPR Insulation
						2121-1	1-3/C #14, 600V, EPR Insulation
						2120	1-3/C + gnd #1/0, 600V, EPR Insulation
						2121-2	1-3/C #14, 600V, EPR Insulation
						2120-1	1-3/C #14, 600V, EPR Insulation
						2120-2	1-3/C #14, 600V, EPR Insulation
3322A	E-264A	78	Liquidtight flex metal conduit	1853.73	1928.98	2119-A	3+1gnd, #250 kcmil, #1/0, 600V, EPR insulation
						2123	1-3/C + gnd #2, 600V, EPR Insulation
						1201-1	1-2/C + gnd #8, 600V, EPR Insulation
						2204-1	1-3/C #16, 600V, EPR Insulation
3322B	E-264A (2)	78	RGS - PVC coated conduit	1853.73	1935.24	2119-A	3+1gnd, #250 kcmil, #1/0, 600V, EPR insulation
						2123	1-3/C + gnd #2, 600V, EPR Insulation
						1201-1	1-2/C + gnd #8, 600V, EPR Insulation
						2204-1	1-3/C #16, 600V, EPR Insulation
3324B (2)	E-264A	78	RGS - PVC coated conduit	0.00	1935.24	Pull Rope	Soft Fiber Polyester
3330A	E-264A	78	Liquidtight flex metal conduit	552.33	1928.98	CCTVE01BA	TVP
						CCTVE01BB	TVCP
						CCTVE01AA	TVP
						CCTVE01AB	TVCP
						GND	1-#250 kcmil, bare copper
3330B	E-264A (2)	78	RGS - PVC coated conduit	552.33	1935.24	CCTVE01BA	TVP
						CCTVE01BB	TVCP
						CCTVE01AA	TVP
						CCTVE01AB	TVCP
						GND	1-#250 kcmil, bare copper
3339A	E-264A	78	Liquidtight flex metal conduit	1432.01	1928.98	2125	3+1gnd, #250 kcmil, #1/0, 600V, EPR insulation
						1201-6	1-2/C + gnd #8, 600V, EPR Insulation
						GND	1-#250 kcmil, bare copper

CONDUIT DATA

Conduit No	Reference	Size	Type	Total Fill (mm²)	Allowable Fill (mm²)	Included Cable No.	Conductor Type
3339B	E-264A (2)	78	RGS - PVC coated conduit	1432.01	1935.24	2125	3+1gnd, #250 kcmil, #1/0, 600V, EPR insulation
						1201-6	1-2/C + gnd #8, 600V, EPR Insulation
						GND	1-#250 kcmil, bare copper
3348A	E-264A	78	Liquidtight flex metal conduit		1928.98	Pull rope	Soft-fiber polyester
3348B	E-264A (2)	78	RGS - PVC coated conduit		1935.24	Pull rope	Soft-fiber polyester
3349A	E-264A	78	Liquidtight flex metal conduit		1928.98	Pull rope	Soft-fiber polyester
3349B	E-264A (2)	78	RGS - PVC coated conduit		1935.24	Pull rope	Soft-fiber polyester
3359A	E-264A	78	Liquidtight flex metal conduit	648.52	1928.98	CCTVE01AC	TVC
						CCTVE01AD	TVL
						MVDSE02A	MVDS DLC
						MVDSE03A	MVDS DLC
						CCTVE01BC	TVC
						CCTVE01BD	TVL
3359B	E-264A (2)	78	RGS - PVC coated conduit	648.52	1935.24	CCTVE01AC	TVC
						CCTVE01AD	TVL
						MVDSE02A	MVDS DLC
						MVDSE03A	MVDS DLC
						CCTVE01BC	TVC
						CCTVE01BD	TVL
8011A	E-264A	78	Liquidtight flex metal conduit		1928.98	Pull rope	Soft-fiber polyester
8011B	E-264A (2)	78	RGS - PVC coated conduit		1935.24	Pull rope	Soft-fiber polyester
9057A	E-264A	78	Liquidtight flex metal conduit	442.35	1928.98	2910-12	4 pair #22, shielded pairs, 300V, PE insulation
						2910-8	4 pair #22, shielded pairs, 300V, PE insulation
						2910-7	4 pair #24, overall shielded, 300V, PE insulation
						2119-2	4 pair #22, shielded pairs, 300V, PE insulation
9057B	E-264A (2)	78	RGS - PVC coated conduit	442.35	1935.24	2910-12	4 pair #22, shielded pairs, 300V, PE insulation
						2910-8	4 pair #22, shielded pairs, 300V, PE insulation
						2910-7	4 pair #24, overall shielded, 300V, PE insulation
						2119-2	4 pair #22, shielded pairs, 300V, PE insulation
9057C	E-264A, E-366	21	RGS - PVC coated conduit	62.07	187.69	2910-11	1-3/C #16, 600V, EPR Insulation

CONDUIT AND TRAY SCHEDULE

E-449C

REVISED BY	DATE REVISED

CALCULATED/DESIGNED BY	DATE 3/04
EJL	3/04
CHECKED BY	
JE	

DESIGN OVERSIGHT
BEHZAD GOLEMOHAMMADI

STATE OF CALIFORNIA - DEPARTMENT OF TRANSPORTATION
Caltrans

LAST REVISION 00-00-00
DATE PLOTTED => 7/11/2008
TIME PLOTTED => 3:07:40 PM

FOR REDUCED PLANS ORIGINAL SCALE IS IN MILLIMETERS 0 20 40 60 80

DGN FILE =>T:\13103\MS\pse\SAS Struc\CCO\SAS CCO42S1\CCO 42S1 Final Submittal 2008-07-11\04-0120f1_040 7R02.dgn
USERNAME =>llorico

CU 04251 EA 0120F1

DIST.	COUNTY	ROUTE	KILOMETER POST TOTAL PROJECT	SHEET NO.	TOTAL SHEETS
04	SF	80	13.2/13.9	452R1	1204

REGISTERED ENGINEER - CIVIL

12-6-04
PLANS APPROVAL DATE

REGISTERED PROFESSIONAL ENGINEER John A. Denis No. C 26169 Exp. 03/31/06 CIVIL STATE OF CALIFORNIA

The State of California or its officers or agents shall not be responsible for the accuracy or completeness of electronic copies of this plan sheet.

T.Y. LIN / MOFFATT & NICHOL
825 BATTERY STREET
SAN FRANCISCO, CA 94111

Caltrans now has a web site! To get to the web site, go to: http://www.dot.ca.gov

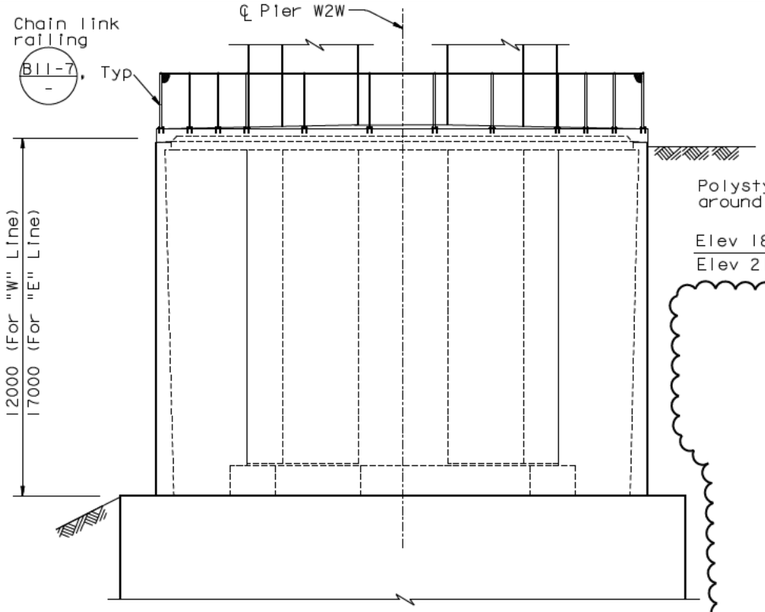

ELEVATION E-E
(Pier W2W shown, Pier W2E similar)
1:100

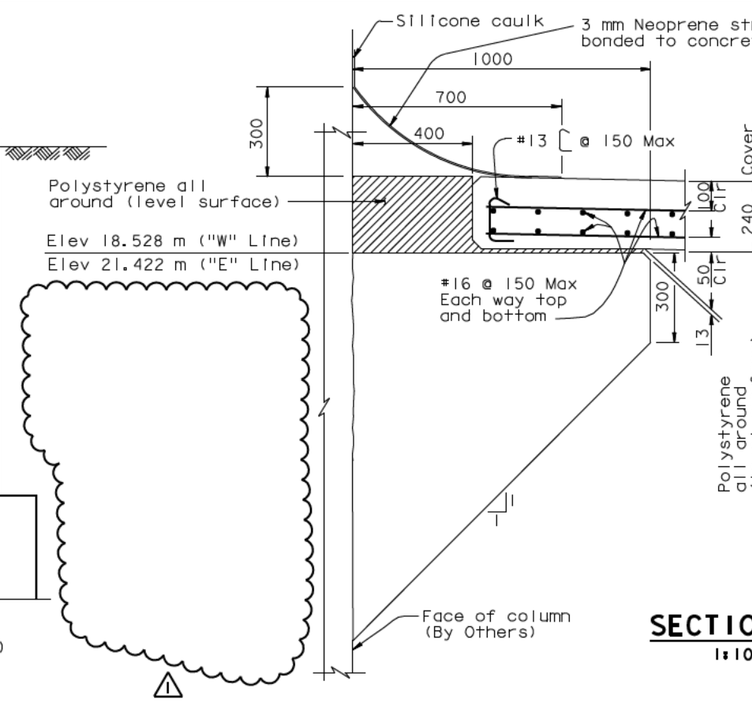

SECTION F-F
1:10

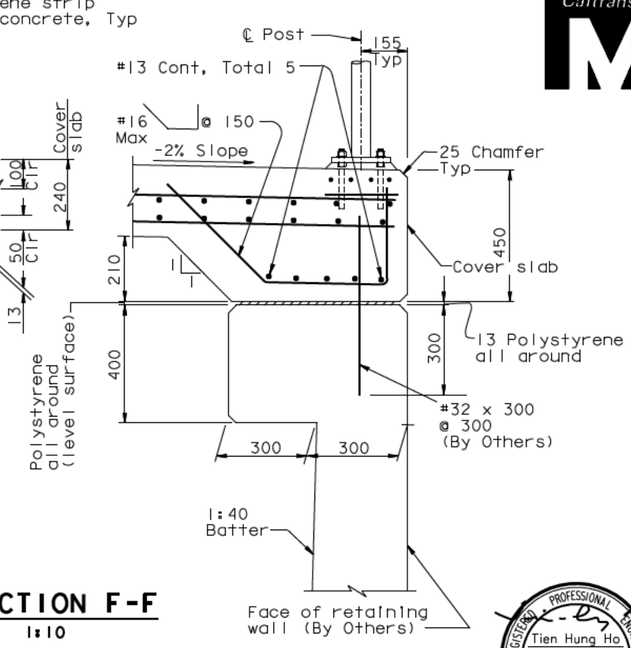

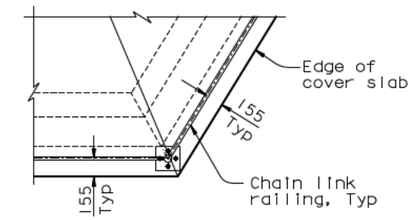

DETAIL A
1:25

REGISTERED PROFESSIONAL ENGINEER Tien Hung Ho No. C 43990 Exp. 06/30/09 CIVIL STATE OF CALIFORNIA

FOR REVISIONS ONLY

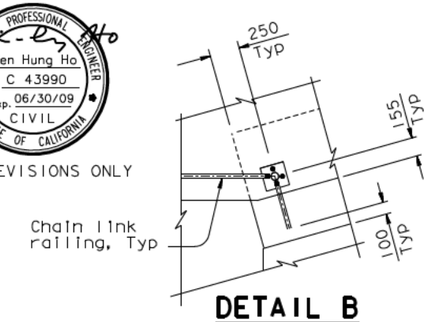

DETAIL B
1:25

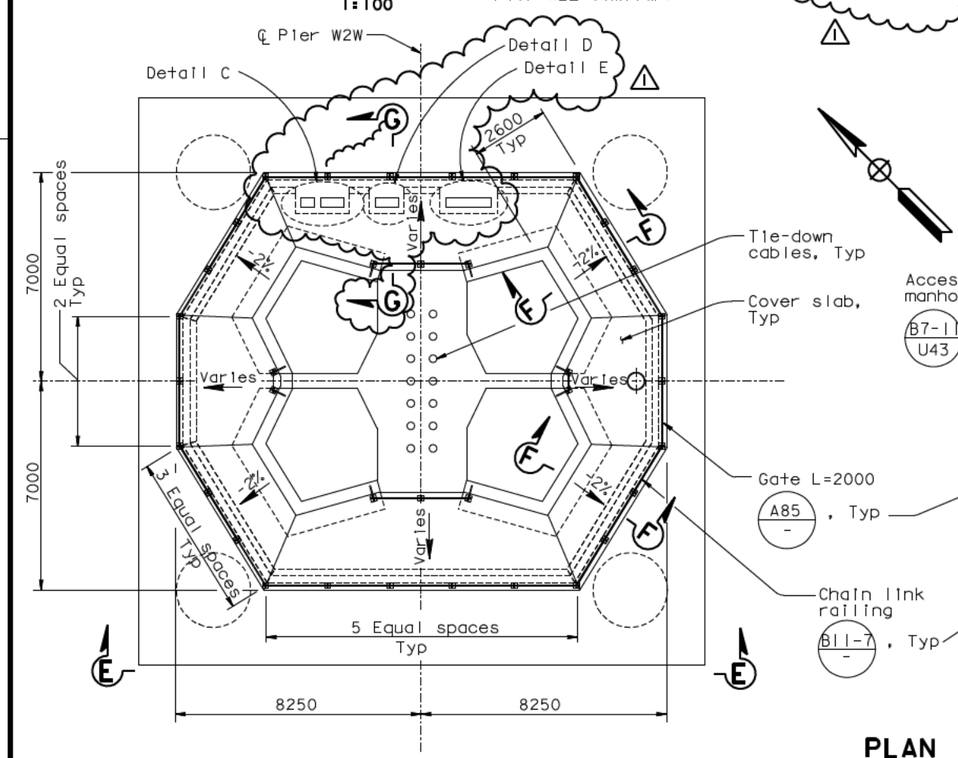

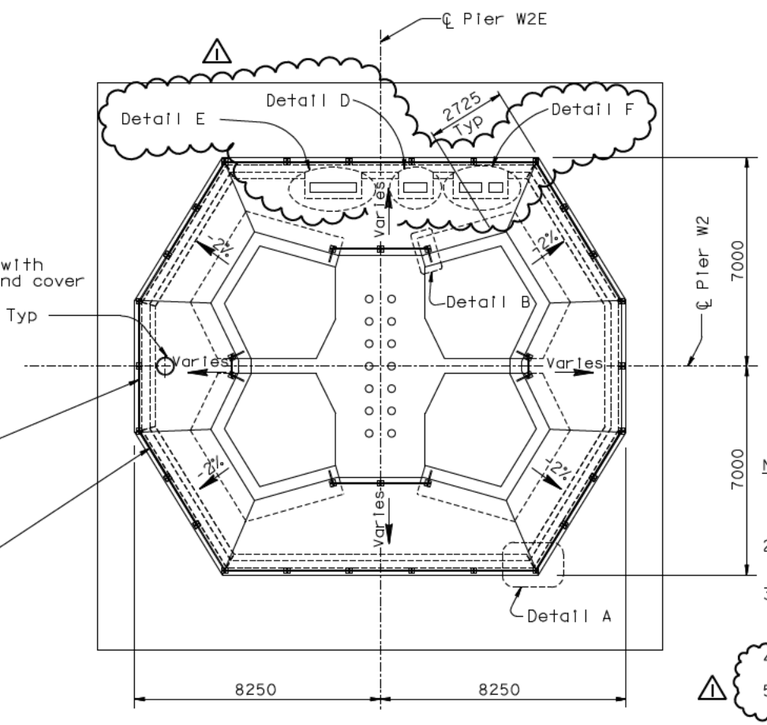

PLAN
1:100

MARK	DATE	DESCRIPTIONS	BY	CH'D	CCO#
1	01/09/08	CABLE TRAY CHANGES	TH	JD	42S1

REVISIONS

CONTRACT CHANGE ORDER NO. ____
SHEET ___ OF ___

NOTES:

1. For pier W2 access details, see "Pier W2 Access Details" sheet.
2. For utility cable trays, location of openings and embed strut channel, see "Road Plans".
3. Fill gap between cable tray and concrete with polystyrene, caulk all around, covered with 3 mm Neoprene strip (similar to that shown in Section F-F).
4. For Section G-G see "Pier W2 Details No.6A" sheet.
5. For Details C, D, E and F, see "Pier W2 Details No.6A" sheet.

ALL DIMENSIONS ARE IN MILLIMETERS UNLESS OTHERWISE SHOWN

R. Valizadeh/V.Toan/Y.L./W.L./F.C.
DESIGN OVERSIGHT
Y. Liu
SIGN OFF DATE 01/09/08

	BY	CHECKED
DESIGN	J. Denis	J. Leventini
DETAILS	K. Tam	J. Leventini
QUANTITIES	J. Denis	D. Harrison

PREPARED FOR THE STATE OF CALIFORNIA DEPARTMENT OF TRANSPORTATION

R. Manzanarez
PROJECT ENGINEER

BRIDGE NO. 34-0006L/R
KILOMETER POST 13.2/13.9

SAN FRANCISCO OAKLAND BAY BRIDGE
EAST SPAN SEISMIC SAFETY PROJECT
SELF-ANCHORED SUSPENSION BRIDGE
(SUPERSTRUCTURE & TOWER)

PIER W2 DETAILS NO.6

Rev. Date: 5-18-98

ORIGINAL SCALE IN MILLIMETERS FOR REDUCED PLANS 0 10 20 30 40 50 60 70 80 90 100

CU 04
EA 0120F1

DISREGARD PRINTS BEARING EARLIER REVISION DATES

REVISION DATES (PRELIMINARY STAGE ONLY): 05/18/99 08/27/99 05/31/01 04/08/02 07/09/02 08/29/02 12/18/02 05/16/03 10/12/04

SHEET 35R1 OF

FILE -> I:\bb\04-012001\sas\contract plans and cco\cco\in progress\cco#42s1\dgn\aep1r04-r1.dgn

100% PS&E

DATE PLOTTED => 09 JAN 2008 TIME PLOTTED => 14:27:07

USERNAME => ptrom

DIST.	COUNTY	ROUTE	KILOMETER POST TOTAL PROJECT	SHEET NO.	TOTAL SHEETS
04	SF	80	13.2/13.9	452S1	1204

Caltrans Metric

REGISTERED ENGINEER - CIVIL

01-09-08
PLANS APPROVAL DATE

REGISTERED PROFESSIONAL ENGINEER Tien Hung Ho No. C 43990 Exp. 06/30/09 CIVIL STATE OF CALIFORNIA

The State of California or its officers or agents shall not be responsible for the accuracy or completeness of electronic copies of this plan sheet.

T.Y. LIN / MOFFATT & NICHOL
825 BATTERY STREET
SAN FRANCISCO, CA 94111

Caltrans now has a web site! To get to the web site, go to: http://www.dot.ca.gov

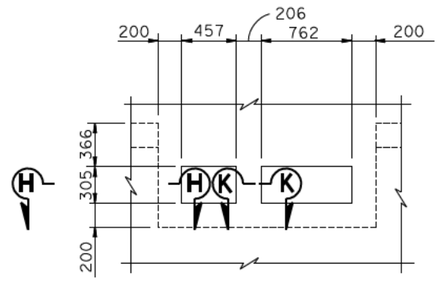

DETAIL C
1:25

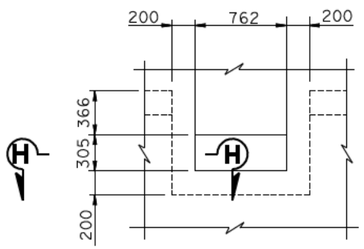

DETAIL D
1:25

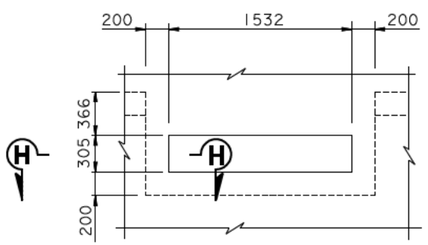

DETAIL E
1:25

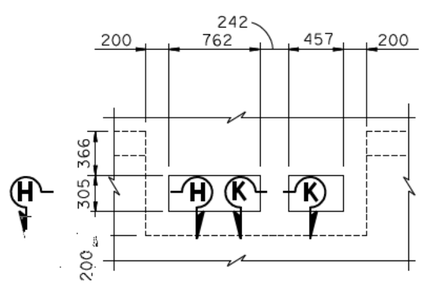

DETAIL F
1:25

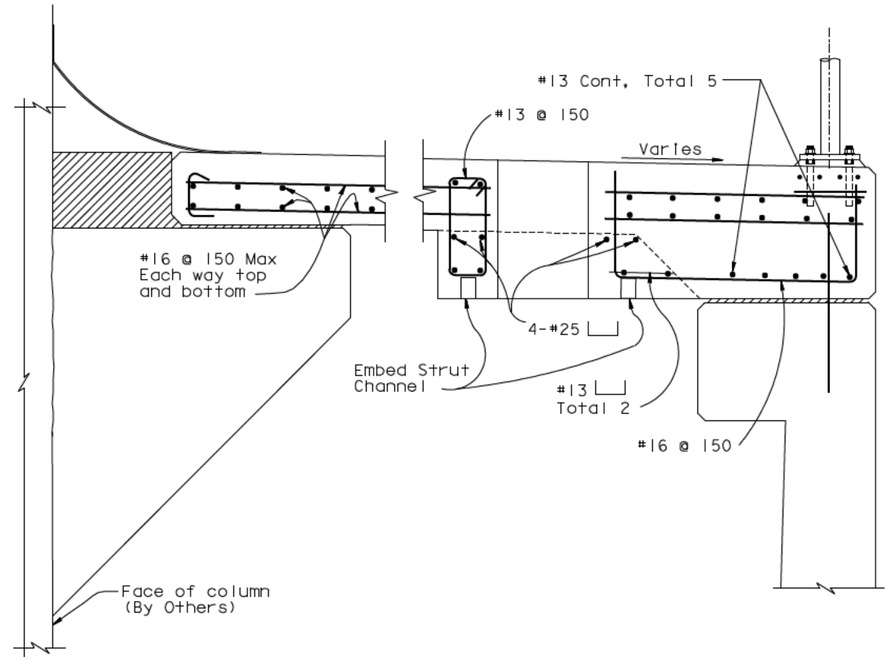

SECTION G-G
1:10

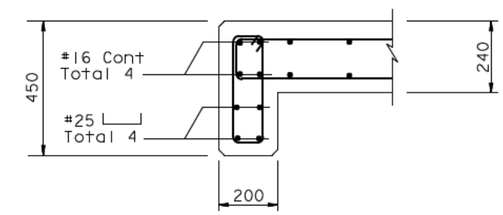

SECTION H-H
1:10

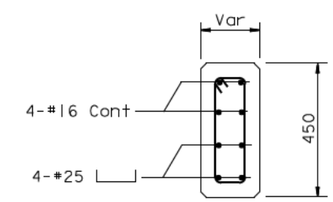

SECTION K-K
1:10

MARK	DATE	DESCRIPTIONS	BY	CH'D	CCO#
0	01/09/08	CABLE TRAY CHANGES	TH	JD	42S1

REVISIONS

CONTRACT CHANGE ORDER NO. ____
SHEET ___ OF ___

ALL DIMENSIONS ARE IN MILLIMETERS UNLESS OTHERWISE SHOWN

NOTES:

1. For utility cable trays, location of openings and embed strut channel, see "Road Plans".

100 % PS&E

R. Vallzadeh/V. Toan/Y.L./W.L./F.C.
DESIGN OVERSIGHT
SIGN OFF DATE 01/09/08

Rev. Date: 5-18-98

DESIGN	BY T. Ho	CHECKED J. Duxbury	
DETAILS	BY T. Ho	CHECKED J. Duxbury	
QUANTITIES	BY T. Ho	CHECKED J. Duxbury	

PREPARED FOR THE STATE OF CALIFORNIA DEPARTMENT OF TRANSPORTATION

R. Manzanarez
PROJECT ENGINEER

BRIDGE NO. 34-0006L/R
KILOMETER POST 13.2/13.9

SAN FRANCISCO OAKLAND BAY BRIDGE
EAST SPAN SEISMIC SAFETY PROJECT
SELF-ANCHORED SUSPENSION BRIDGE
(SUPERSTRUCTURE & TOWER)

PIER W2 DETAILS NO. 6A

ORIGINAL SCALE IN MILLIMETERS FOR REDUCED PLANS 0 10 20 30 40 50 60 70 80 90 100

CU 04
EA 0120F1

DISREGARD PRINTS BEARING EARLIER REVISION DATES

REVISION DATES (PRELIMINARY STAGE ONLY) 01/09/08

SHEET 35S1 OF

FILE -> I:\bb\04-012001\sas\contract plans and cco\cco\in progress\cco#42s1\dgn\aeplr04s1.dgn

USERNAME => ptom DATE PLOTTED => 09 JAN 2008 TIME PLOTTED => 14:24:32

DIST.	COUNTY	ROUTE	KILOMETER POST TOTAL PROJECT	SHEET NO.	TOTAL SHEETS
04	SF	80	13.2/13.9	631S1	1204

Caltrans Metric

Daniel J. Turner
REGISTERED ENGINEER - CIVIL
01-09-08
PLANS APPROVAL DATE

REGISTERED PROFESSIONAL ENGINEER Daniel J. Turner No. C 65033 Exp. 06/30/09 CIVIL STATE OF CALIFORNIA

The State of California or its officers or agents shall not be responsible for the accuracy or completeness of electronic copies of this plan sheet.

T.Y. LIN / MOFFATT & NICHOL
825 BATTERY STREET
SAN FRANCISCO, CA 94111

Caltrans now has a web site! To get to the web site, go to: http://www.dot.ca.gov

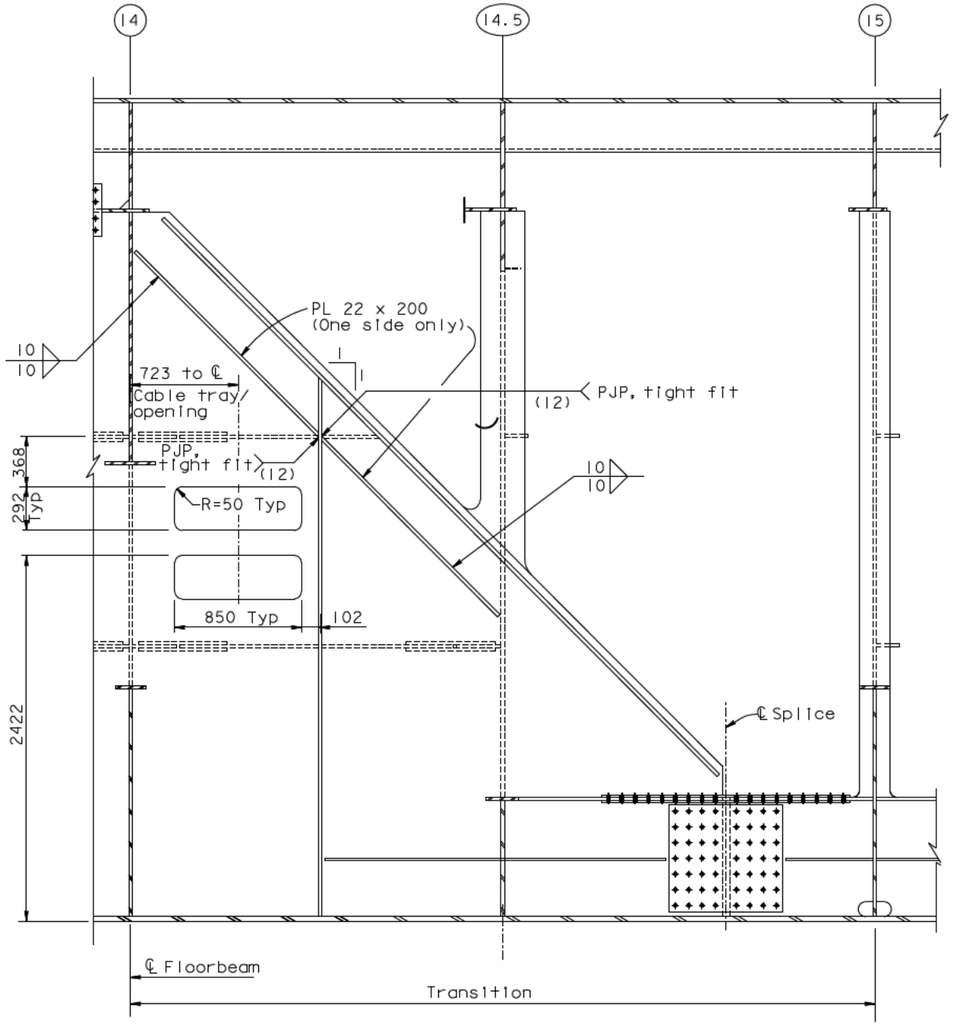

LONGITUDINAL SHEAR PLATE ELEVATION (PP14 to PP15)

1:20 (See Note 1)

MARK	DATE	DESCRIPTIONS	BY	CH'D	CCO#
0	01/09/08	CABLE TRAY CHANGES	DT	GB	42S1

REVISIONS

CONTRACT CHANGE ORDER NO. _____
SHEET ____ OF ____

NOTES:

1. For Details not shown, see "Typical Girder Details No. 7" sheet.

100 % PS&E

TIME PLOTTED => 14:26:10
DATE PLOTTED => 09 JAN 2008
USERNAME => pfram

ALL DIMENSIONS ARE IN MILLIMETERS UNLESS OTHERWISE SHOWN

R. Valizadeh/V. Toan/Y.L./W.L./F.C.
DESIGN OVERSIGHT
Roya Valizadeh / Vong Toan / Y. Liu
SIGN OFF DATE 01/09/08

DESIGN	BY D. Turner	CHECKED G. Baker	
DETAILS	BY D. Turner	CHECKED G. Baker	
QUANTITIES	BY D. Turner	CHECKED G. Baker	

PREPARED FOR THE STATE OF CALIFORNIA DEPARTMENT OF TRANSPORTATION

R. Manzanarez
PROJECT ENGINEER

BRIDGE NO. 34-0006L/R
KILOMETER POST 13.2/13.9

SAN FRANCISCO OAKLAND BAY BRIDGE
EAST SPAN SEISMIC SAFETY PROJECT
SELF-ANCHORED SUSPENSION BRIDGE (SUPERSTRUCTURE & TOWER)

TYPICAL GIRDER DETAILS NO. 7A

Rev. Date: 5-18-98

ORIGINAL SCALE IN MILLIMETERS FOR REDUCED PLANS 0 10 20 30 40 50 60 70 80 90 100

CU 04
EA 0120F1

DISREGARD PRINTS BEARING EARLIER REVISION DATES 01/09/08

REVISION DATES (PRELIMINARY STAGE ONLY)

SHEET 214S1 OF

FILE -> I:\bb\04-0120F1\sas\contract plans and cco\cco\in progress\cco#42s1\dgn\agdkd04a.dgn

DIST.	COUNTY	ROUTE	KILOMETER POST TOTAL PROJECT	SHEET NO.	TOTAL SHEETS
04	SF	80	13.2/13.9	964R1	1204

Caltrans Metric

George Baker
REGISTERED ENGINEER - CIVIL

1-27-03
PLANS APPROVAL DATE

REGISTERED PROFESSIONAL ENGINEER George S. Baker No. C57112 Exp. 12/31/05 CIVIL STATE OF CALIFORNIA

The State of California or its officers or agents shall not be responsible for the accuracy or completeness of electronic copies of this plan sheet.

T.Y. LIN / MOFFATT & NICHOL
825 BATTERY STREET
SAN FRANCISCO, CA 94111

To get to the web site, go to: http://www.dot.ca.gov

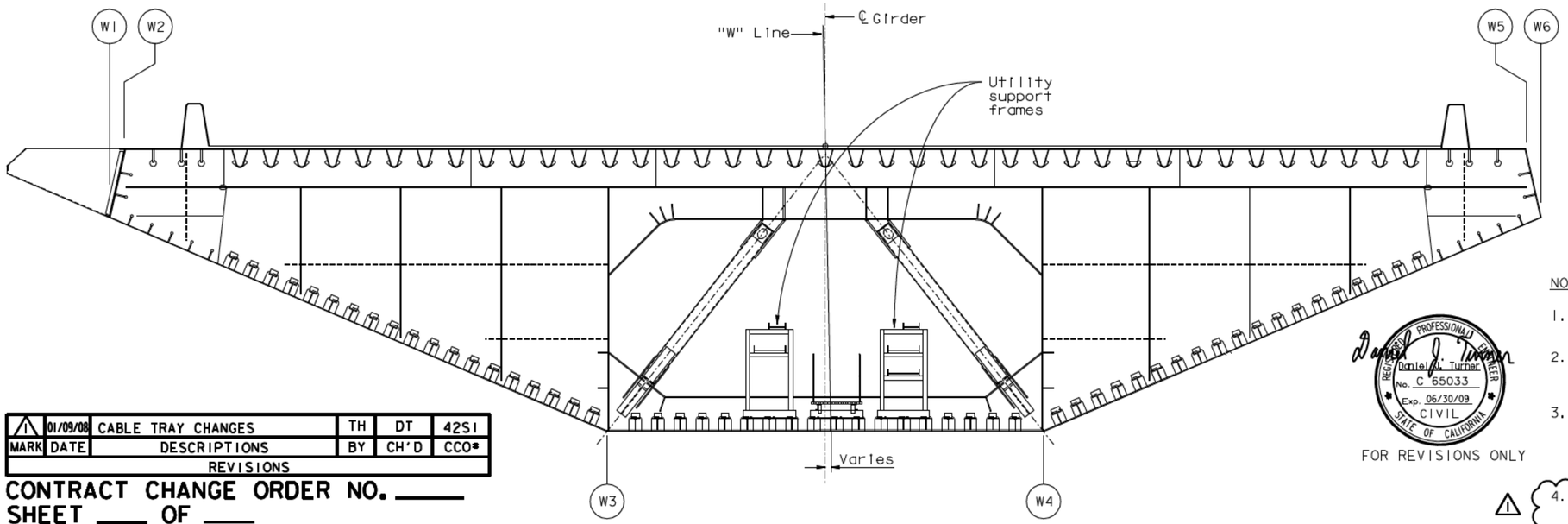

MARK	DATE	DESCRIPTIONS	BY	CH'D	CCO#
1	01/09/08	CABLE TRAY CHANGES	TH	DT	42S1

REVISIONS

CONTRACT CHANGE ORDER NO. ____
SHEET ___ OF ___

TYPICAL SECTION ("W" LINE SHOWN, "E" LINE SIMILAR)

1:50

Daniel J. Turner
REGISTERED PROFESSIONAL ENGINEER Daniel J. Turner No. C 65033 Exp. 06/30/09 CIVIL STATE OF CALIFORNIA

FOR REVISIONS ONLY

NOTES:

1. For details of utility support frames, see "Road Plans" sheets.
2. For details of utility cable penetrations, see "Utility Details No.1" sheet. For cable diameters and fittings, see "Road Plans" sheets.
3. For utility cable penetrations closer than 1 m c-c spacing doubler plates shall be used at all such cutouts. For details see "Duct Opening Detail" on "Dehumidification Support Details No.5" sheet.
4. Minimum spacing shown may be reduced as approved by the Engineer. (1)
5. For exact utility duct locations see "Typical Tray and Conduit Installation at Pier W2W" and "Typical Tray and Conduit Installation at Pier W2E" sheets.

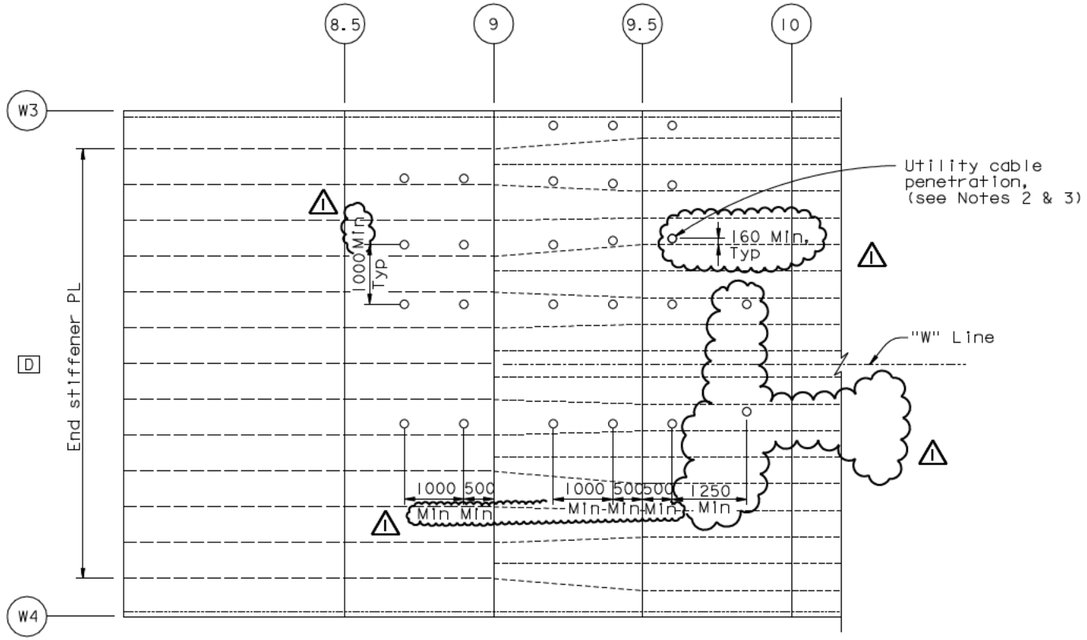

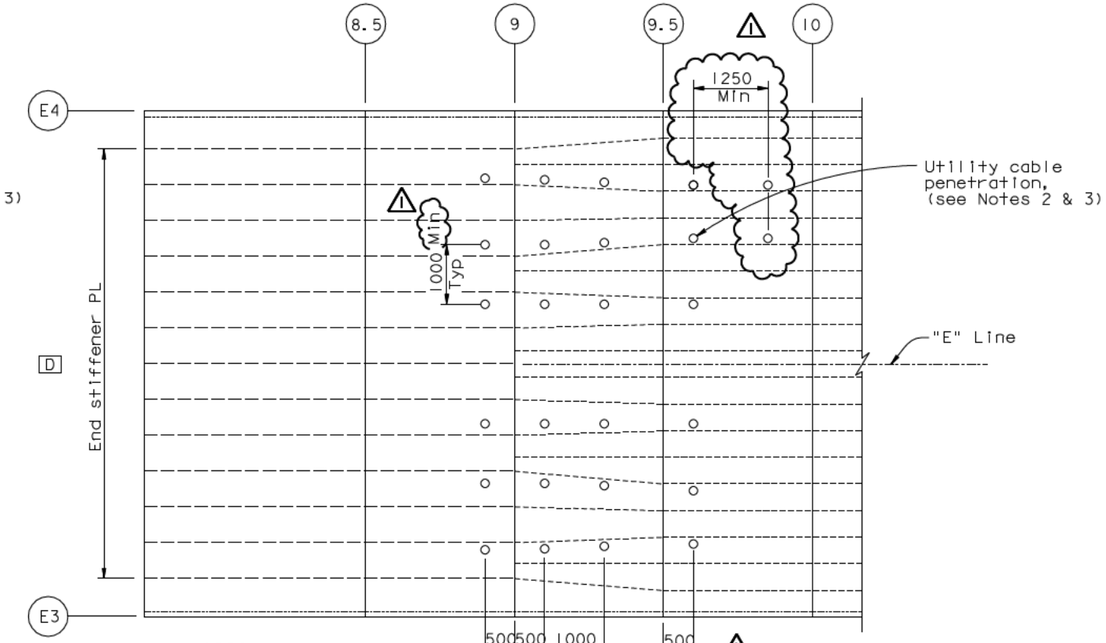

UTILITY DUCTS THROUGH GIRDER FACE D AT PIER W2 (See Notes 4 & 5)

1:50

ALL DIMENSIONS ARE IN MILLIMETERS UNLESS OTHERWISE SHOWN

100 % PS&E

DATE PLOTTED => 09 JAN 2008 TIME PLOTTED => 09:38:01

USERNAME => dtom

R. Vallizadeh/V. Toan/Y.L./W.L./F.C.
DESIGN OVERSIGHT
Ryan Vallizadeh / Vona Toan / Y. Liu
SIGN OFF DATE 01/09/08

Rev. Date: 5-18-98

DESIGN	BY G. Baker	CHECKED T. Ho	
DETAILS	BY M. Gulyas	CHECKED T. Ho	
QUANTITIES	BY C. Mauch	CHECKED D. Harrison	

PREPARED FOR THE STATE OF CALIFORNIA DEPARTMENT OF TRANSPORTATION

R. Manzanarez
PROJECT ENGINEER

BRIDGE NO. 34-0006L/R
KILOMETER POST 13.2/13.9

SAN FRANCISCO OAKLAND BAY BRIDGE
EAST SPAN SEISMIC SAFETY PROJECT
SELF-ANCHORED SUSPENSION BRIDGE
(SUPERSTRUCTURE & TOWER)

UTILITY LAYOUT

ORIGINAL SCALE IN MILLIMETERS FOR REDUCED PLANS 0 10 20 30 40 50 60 70 80 90 100

CU 04
EA 0120F1

DISREGARD PRINTS BEARING EARLIER REVISION DATES

REVISION DATES (PRELIMINARY STAGE ONLY): 05/06/98 08/02/99 05/31/01 04/08/02 07/01/02 12/19/02

SHEET 547R1 OF

FILE -> I:\bb\04-012001\sas\contract plans and cco\cco\In progress\cco#42s1\dgn\akmscl1.dgn

STATE OF CALIFORNIA - DEPARTMENT OF TRANSPORTATION

CONTRACT CHANGE ORDER

Change Requested by: Engineer

CCO: 42 **Suppl. No. 2** **Contract No. 04 – 0120F4** **Road** SF-80-13.2/13.9 **FED. AID LOC.:**

To: **AMERICAN BRIDGE/FLUOR ENTERPRISES INC A JOINT VENTURE**

You are directed to make the following changes from the plans and specifications or do the following described work not included in the plans and specifications for this contract. ***NOTE: This change order is not effective until approved by the Engineer.***

Description of work to be done, estimate of quantities and prices to be paid. (Segregate between additional work at contract price, agreed price and force account.) Unless otherwise stated, rates for rental of equipment cover only such time as equipment is actually used and no allowance will be made for idle time. This last percentage shown is the net accumulated increase or decrease from the original quantity in the Engineer's Estimate.

Adjustment of Compensation at Lump Sum Price:

This change order shall close the deferred time element of change order 42S0 and 42S1.

Adjustment of Compensation at Lump Sum.....$0

Estimated Cost: Increase ☐ Decrease ☐ $0.00

By reason of this order the time of completion will be adjusted as follows: 0 Days

Submitted by

Signature	**Resident Engineer** Kannu Balan, Senior T.E.	**Date**	5-2-11

Approval Recommended by

Signature	**Senior Transportation Engineer** William Shedd, Senior T.E.	**Date**	5-2-11

Engineer Approval by

Signature	**Principal Transportation Engineer** FOR Peter Siegenthaler, Prin. T.E.	**Date**	5-16-11

We the undersigned contractor, have given careful consideration to the change proposed and agree, if this proposal is approved, that we will provide all equipment, furnish the materials, except as otherwise be noted above, and perform all services necessary for the work above specified, and will accept as full payment therefor the prices shown above.

NOTE: If you, the contractor, do not sign acceptance of this order, your attention is directed to the requirements of the specifications as to proceeding with the ordered work and filing a written protest within the time therein specified.

Contractor Acceptance by

Signature	(Print name and title) BRIAN A. PETERSEN - PROJECT DIRECTOR	**Date**	12 MAY 11

STATE OF CALIFORNIA - DEPARTMENT OF TRANSPORTATION

CONTRACT CHANGE ORDER MEMORANDUM

TO: Pete Siegenthaler, Prin TE /	FILE: **E.A.** 04 - 0120F4
FROM: Kannu Balan, Senior TE	**CO-RTE-PM** SF-80-13.2/13.9
	FED. NO.
CCO#: **42** SUPPLEMENT#: **2** Category Code: **CBSA**	CONTINGENCY BALANCE (incl. this change) **$172,739,700.11**
COST: **$0.00** INCREASE ☐ DECREASE ☐	HEADQUARTERS APPROVAL REQUIRED? ☐ YES ☑ NO
SUPPLEMENTAL FUNDS PROVIDED: **$0.00**	IS THIS REQUEST IN ACCORDANCE WITH ENVIRONMENTAL DOCUMENTS? ☑ YES ☐ NO
CCO DESCRIPTION: Electrical Modifications Time Adjustment	**PROJECT DESCRIPTION:** CONSTRUCT SELF-ANCHORED SUSPENSION BRIDGE

Original Contract Time:	Time Adj. This Change:	Previously Approved CCO Time Adjustments:	Percentage Time Adjusted: (including this change)	Total # of Unreconciled Deferred Time CCO(s): (including this change)
2490 Day(s)	**0** Day(s)	**501** Day(s)	**20** %	**1**

THIS CHANGE ORDER PROVIDES FOR:

Closing out the Deferred Time element for CCO 42S0 and 42S1.

It has been determined that the work from Contract Change Order No. 42S0 and 42S1 are not the controlling operation and it will not have any impact on the project completion date.

CONCURRED BY:	
Construction Engineer:	Date
Bridge Engineer:	Date
Project Engineer:	Date
Project Manager:	Date
FHWA Rep.:	Date
Environmental:	Date
Other (specify):	Date
Other (specify):	Date
District Prior Approval By:	Date
HQ (Issue Approve) By:	Date
Resident Engineer's Signature: Kannu Bala	Date 5-2-11

ESTIMATE OF COST

	THIS REQUEST	TOTAL TO DATE
ITEMS	$0.00	$0.00
FORCE ACCOUNT	$0.00	$0.00
AGREED PRICE	$0.00	$0.00
ADJUSTMENT	$0.00	$0.00
TOTAL	$0.00	$0.00

FEDERAL PARTICIPATION

☐ PARTICIPATING ☐ PARTICIPATING IN PART ☑ NONE
☐ NON-PARTICIPATING (MAINTENANCE) ☐ NON-PARTICIPATING

FEDERAL SEGREGATION (if more than one Funding Source or P.I.P. type)
☐ CCO FUNDED PER CONTRACT ☐ CCO FUNDED AS FOLLOWS

FEDERAL FUNDING SOURCE	PERCENT

ADA Notice: For individuals with sensory disabilities, this document is available in alternate formats. For information call: (916) 654-6410 or TDD (916) 654-3880 or write Records and Forms Management, 1120 N Street, MS-89, Sacramento, CA 95814.