DIST.	COUNTY	ROUTE	KILOMETER POST TOTAL PROJECT	SHEET NO.	TOTAL SHEETS
04	SF	80	13.2/13.9	890S9	1204

Caltrans Metric

Daniel J. Turner
REGISTERED ENGINEER - CIVIL

05-29-14
PLANS APPROVAL DATE

REGISTERED PROFESSIONAL ENGINEER Daniel J. Turner No. C 65033 Exp. 06/30/15 CIVIL STATE OF CALIFORNIA

The State of California or its officers or agents shall not be responsible for the accuracy or completeness of electronic copies of this plan sheet.

T.Y. LIN / MOFFATT & NICHOL
825 BATTERY STREET
SAN FRANCISCO, CA 94111

Caltrans now has a web site! To get to the web site, go to: http://www.dot.ca.gov

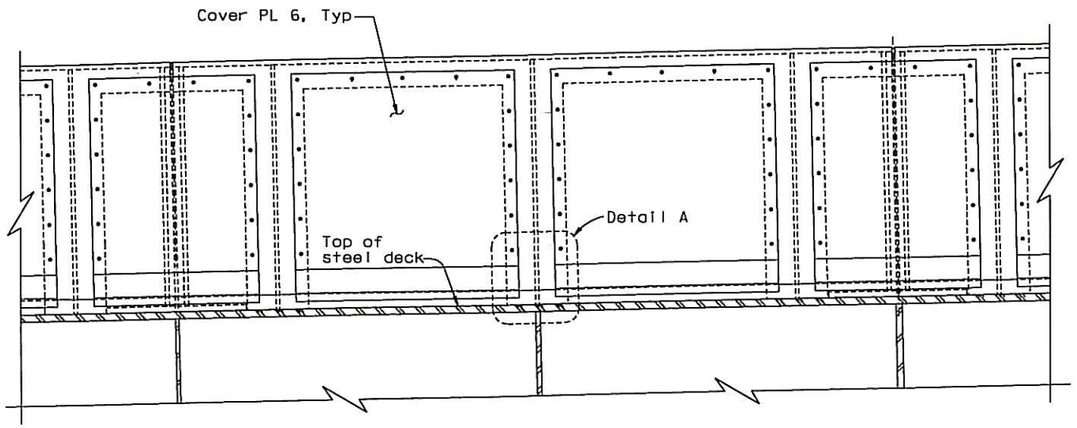

BARRIER AT W2, E5 LINE-ELEVATION (Looking South)
1:10

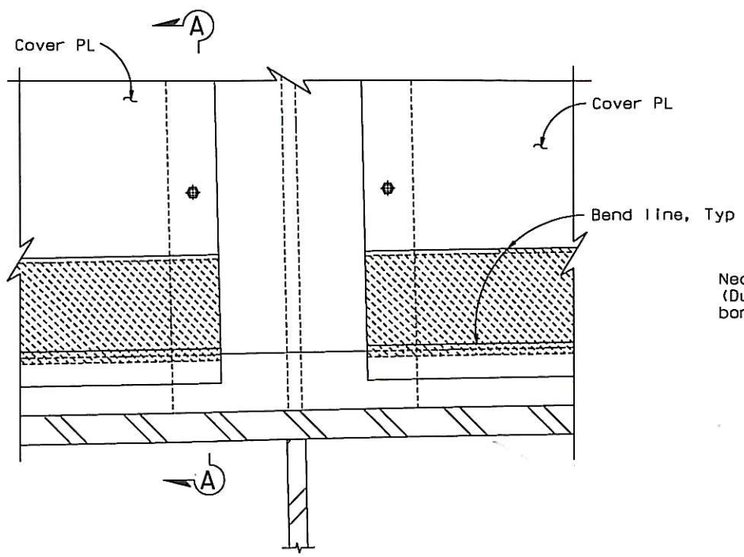

DETAIL A
1:2.5

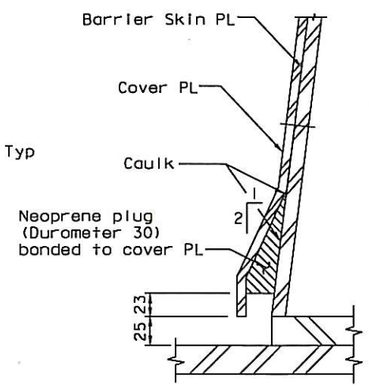

SECTION A-A (Diverter plate & backer rod not shown)
1:2.5

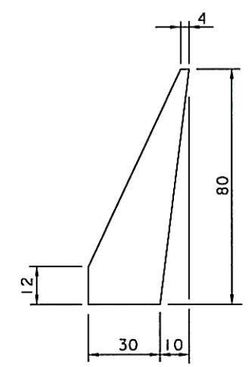

NEOPRENE PLUG DETAIL
1:1

LEGEND:

Neoprene pad (Durometer 30) bonded to cover PL

NOTES:

1. Pipe supports, conduit penetration details and receptacle mountings not shown for clarity.
2. For barrier details not shown, see "Barrier Details No. 2B" sheet..

ADDITIONAL SEALING DETAILS

CONTRACT CHANGE ORDER NO. 380
SHEET 2 OF 2

REQUESTS FOR INFORMATION NOT ADDRESSED IN THIS CCO REMAIN IN FORCE

ALL DIMENSIONS ARE IN MILLIMETERS UNLESS OTHERWISE SHOWN

A. Akinsanya / W. Long
DESIGN OVERSIGHT
SIGN OFF DATE 05/29/14

MARK	DATE	DESCRIPTIONS	BY	CH'D	CCO#
0	05/29/14	BARRIER NEOPRENE PLUGS	DT	HT	380

REVISIONS

DESIGN	BY D. Turner	CHECKED H. Tazlr	
DETAILS	BY D. Turner	CHECKED H. Tazlr	
QUANTITIES	BY D. Turner	CHECKED H. Tazlr	

PREPARED FOR THE STATE OF CALIFORNIA DEPARTMENT OF TRANSPORTATION

M. Nader
PROJECT ENGINEER

BRIDGE NO. 34-0006L/R
KILOMETER POST 13.2/13.9

SAN FRANCISCO OAKLAND BAY BRIDGE
EAST SPAN SEISMIC SAFETY PROJECT
SELF-ANCHORED SUSPENSION BRIDGE
(SUPERSTRUCTURE & TOWER)

BARRIER DETAILS NO. 2J

Rev. Date: 5-15-98

ORIGINAL SCALE IN MILLIMETERS FOR REDUCED PLANS 0 10 20 30 40 50 60 70 80 90 100

CU 04
EA 0120F1

DISREGARD PRINTS BEARING EARLIER REVISION DATES 05/29/14

REVISION DATES (PRELIMINARY STAGE ONLY)

SHEET 473S9 OF

FILE => I:\bb\04-0120F1\sas\contract plans and cco\cco\cco#380\1-original 05-29-14\dgn\akbar03j.dgn

100 % PS&E

USERNAME => arivera DATE PLOTTED => 29 MAY 2014 TIME PLOTTED => 12:57:04