DIST.	COUNTY	ROUTE	KILOMETER POST TOTAL PROJECT	SHEET NO.	TOTAL SHEETS
04	SF	80	13.2/13.9	452R2	1204

REGISTERED ENGINEER - CIVIL

12-6-04
PLANS APPROVAL DATE

REGISTERED PROFESSIONAL ENGINEER John A. Denis No. C 26169 Exp. 03/31/06 CIVIL STATE OF CALIFORNIA

The State of California or its officers or agents shall not be responsible for the accuracy or completeness of electronic copies of this plan sheet.

T.Y. LIN / MOFFATT & NICHOL
825 BATTERY STREET
SAN FRANCISCO, CA 94111

Caltrans now has a web site! To get to the web site, go to: http://www.dot.ca.gov

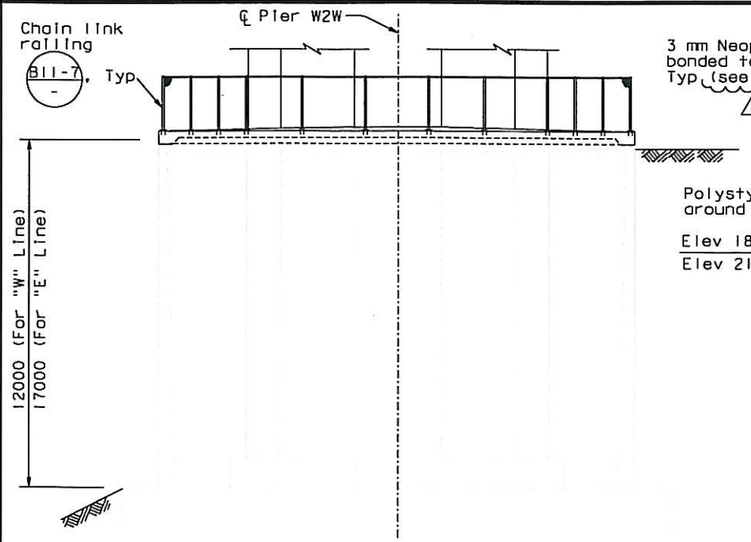

ELEVATION E-E (Pier W2W shown, Pier W2E similar)
1:100

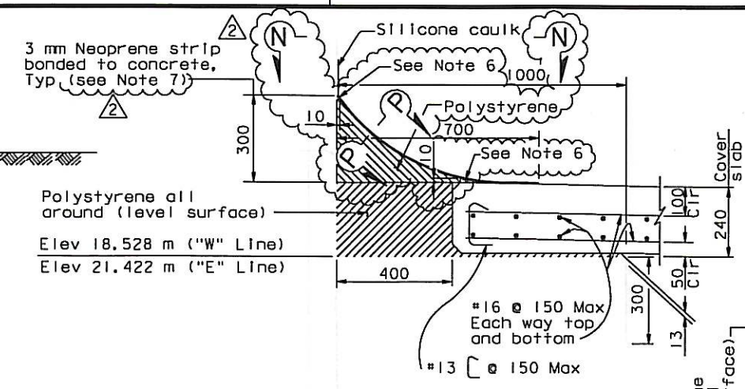

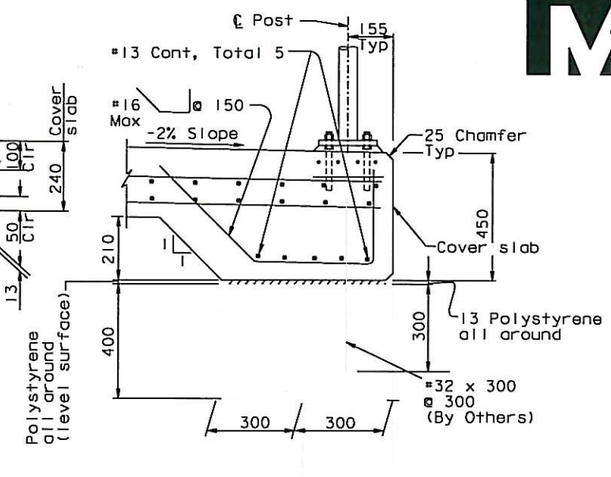

SECTION F-F
1:10

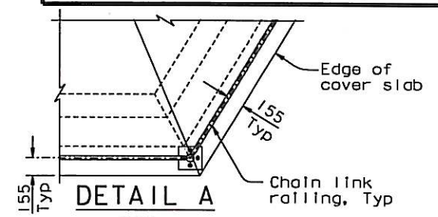

DETAIL A
1:25

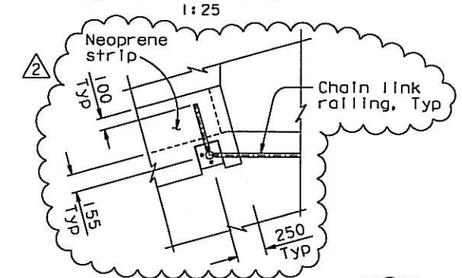

DETAIL B
1:25

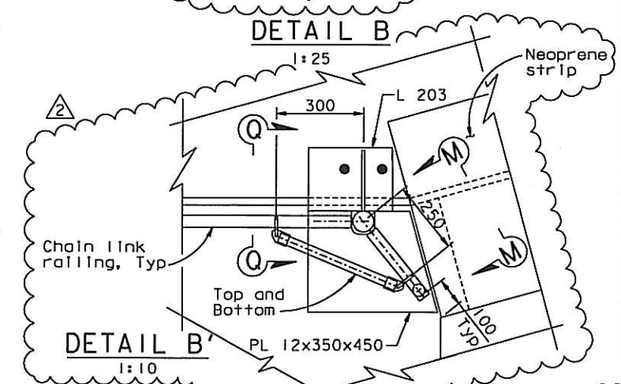

DETAIL B'
1:10

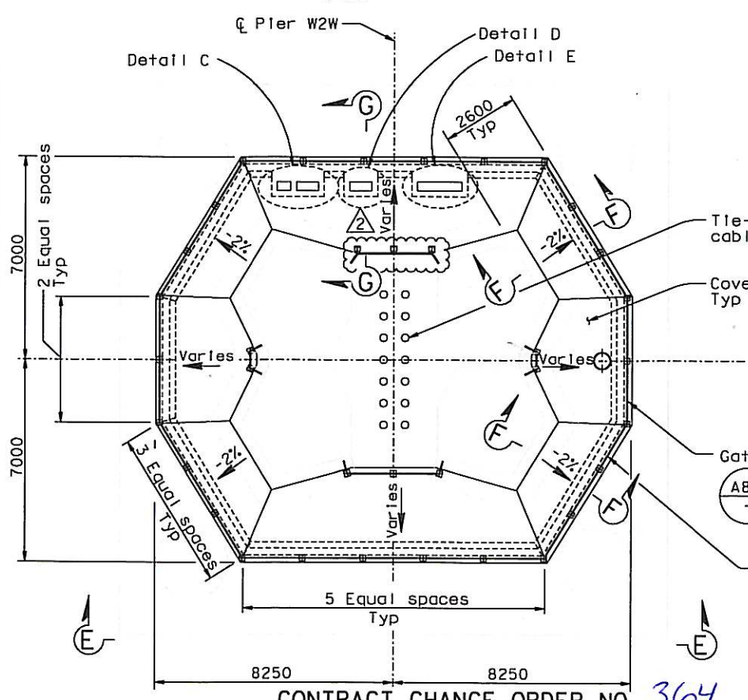

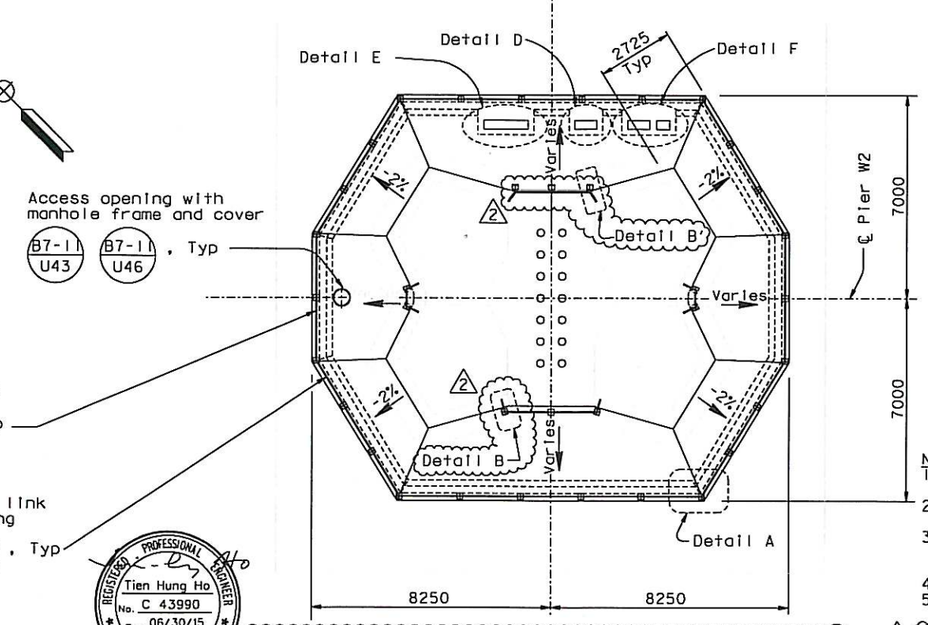

PLAN
1:100

CONTRACT CHANGE ORDER NO. 364
SHEET 2 OF 3

REQUESTS FOR INFORMATION NOT ADDRESSED IN THIS CCO REMAIN IN FORCE

NOTES:
1. For pier W2 access details, see "Pier W2 Access Details" sheet.
2. For utility cable trays, location of openings and embed strut channel, see "Road Plans".
3. Fill gap between cable tray and concrete with polystyrene, caulk all around, covered with 3 mm Neoprene strip (similar to that shown in Section F-F).
4. For Section G-G see "Pier W2 Details No.6A" sheet.
5. For Details C, D, E, F, View N-N and Section P-P & Q-Q, see "Pier W2 Details No.6A" sheet.
6. Gaps between neoprene strips shall be filled with Permatex Ultra Blue RTV or equivalent.
7. Neoprene strip shall be trimmed to clear chain link fence post base plates and conduit support base plates by 5 mm maximum.

ALL DIMENSIONS ARE IN MILLIMETERS UNLESS OTHERWISE SHOWN

REGISTERED PROFESSIONAL ENGINEER Tien Hung Ho No. C 43990 Exp. 06/30/15 CIVIL STATE OF CALIFORNIA

FOR REVISIONS ONLY

R. Valizadeh/V. Toan/Y.L./W.L./F.C.
DESIGN OVERSIGHT
Roya Valizadeh / Vonn Toan / Y. Liu
SIGN OFF DATE 01/07/14

MARK	DATE	DESCRIPTIONS	BY	CH'D	CCO#
2	01/07/14	W2 BASE DETAILS	DT	TH	364
1	01/09/08	CABLE TRAY CHANGES	TH	JD	4251

REVISIONS

DESIGN	BY J. Denis	CHECKED J. Leventini	
DETAILS	BY K. Tam	CHECKED J. Leventini	
QUANTITIES	BY J. Denis	CHECKED D. Harrison	

PREPARED FOR THE STATE OF CALIFORNIA DEPARTMENT OF TRANSPORTATION

R. Manzanarez
PROJECT ENGINEER

BRIDGE NO. 34-0006L/R
KILOMETER POST 13.2/13.9

SAN FRANCISCO OAKLAND BAY BRIDGE
EAST SPAN SEISMIC SAFETY PROJECT
SELF-ANCHORED SUSPENSION BRIDGE
(SUPERSTRUCTURE & TOWER)

PIER W2 DETAILS NO. 6

Rev. Date: 5-18-98

ORIGINAL SCALE IN MILLIMETERS FOR REDUCED PLANS 0 10 20 30 40 50 60 70 80 90 100

CU 04
EA 0120F1

DISREGARD PRINTS BEARING EARLIER REVISION DATES

REVISION DATES (PRELIMINARY STAGE ONLY) 01/07/99 01/07/01 01/07/02 01/07/03 01/07/04 01/07/05 10/12/04

SHEET 35R2 OF

FILE => I:\bb\04-012001\sas\contract plans and cco\cco\cco#364\3-update 01-07-14\dgn\aapir04-r1.dgn

USERNAME => DMirrow DATE PLOTTED => 07 JAN 2014 TIME PLOTTED => 10:28:42

100 % PS&E

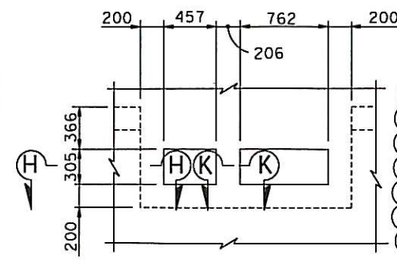

DETAIL C
1:25

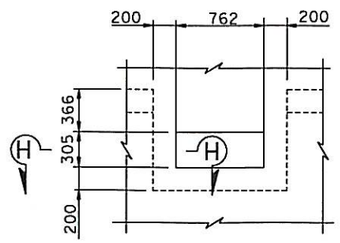

DETAIL D
1:25

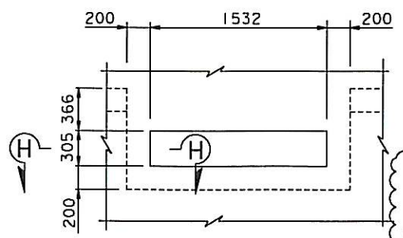

DETAIL E
1:25

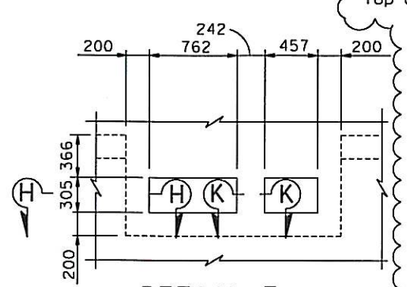

DETAIL F
1:25

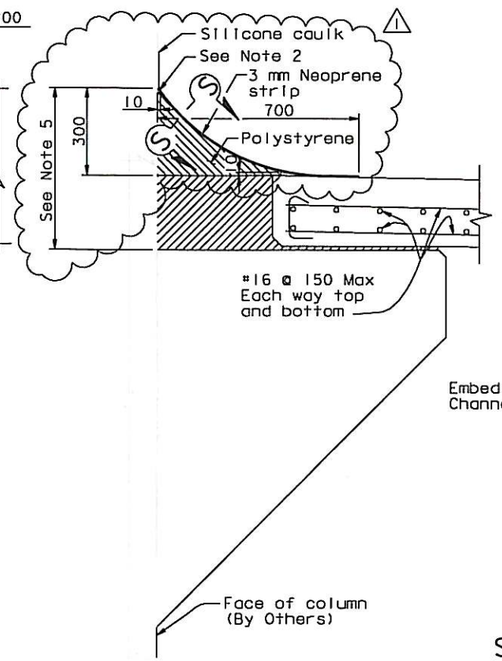

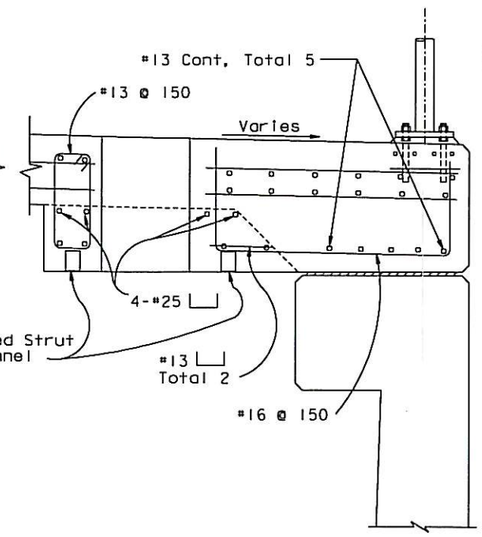

SECTION G-G
1:10

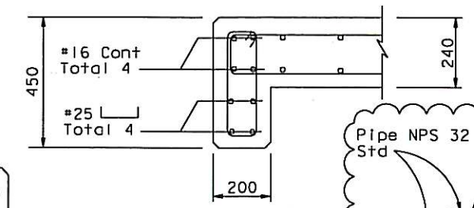

SECTION H-H
1:10

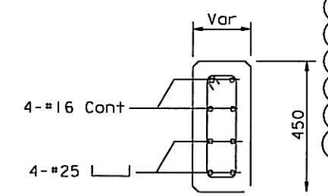

SECTION K-K
1:10

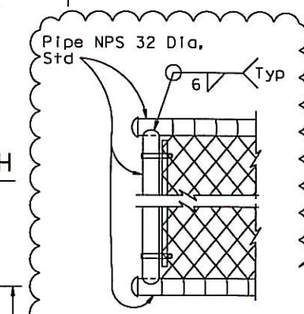

SECTION M-M
1:10

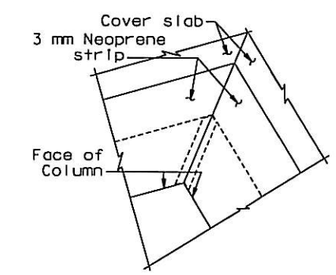

VIEW N-N
1:5

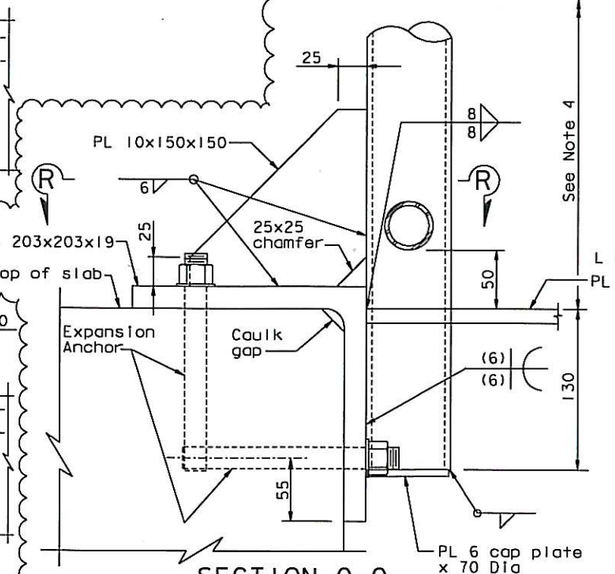

SECTION Q-Q
1:2.5

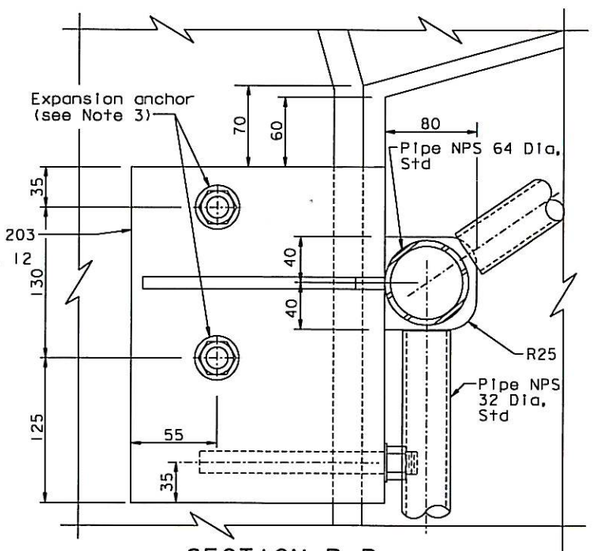

SECTION R-R (See Note 4)
1:2.5

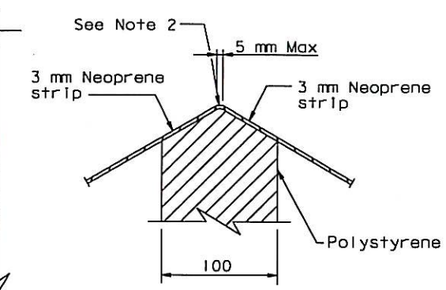

SECTION P-P
1:10

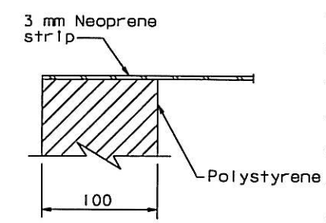

SECTION S-S
1:10

NOTES:

1. For utility cable trays, location of openings and embed strut channel, see "Road Plans".
2. Gaps between neoprene strips shall be filled with Permatex Ultra Blue RTV or equivalent.
3. Expansion anchors shall be ¾" Hilti Kwik Bolt 3 Standard Thread, hot dipped galvanized, installed with a minimum embedment length of 121 mm and per the manufacturer's instructions.
4. For chain link railing details, see Caltrans Standard Plan B11-7.
5. Exposed polystyrene surfaces shall be coated with silicone rubber elastomeric compound. Gaps at the exposed surface shall be filled with silicone rubber elastomeric compound.

CONTRACT CHANGE ORDER NO. 364
SHEET 3 OF 3

REQUESTS FOR INFORMATION NOT ADDRESSED IN THIS CCO REMAIN IN FORCE

ALL DIMENSIONS ARE IN MILLIMETERS UNLESS OTHERWISE SHOWN

DIST.	COUNTY	ROUTE	KILOMETER POST TOTAL PROJECT	SHEET NO.	TOTAL SHEETS
04	SF	80	13.2/13.9	452SIRI	1204

REGISTERED ENGINEER - CIVIL
01-09-08
PLANS APPROVAL DATE
REGISTERED PROFESSIONAL ENGINEER Tien Hung Ho No. C 43990 Exp. 06/30/15 CIVIL STATE OF CALIFORNIA

The State of California or its officers or agents shall not be responsible for the accuracy or completeness of electronic copies of this plan sheet.

T.Y. LIN / MOFFATT & NICHOL
825 BATTERY STREET
SAN FRANCISCO, CA 94111

Caltrans now has a web site! To get to the web site, go to: http://www.dot.ca.gov

MARK	DATE	DESCRIPTIONS	BY	CH'D	CCO#
1	01/07/14	W2 BASE DETAILS	DT	TH	364
0	01/09/08	CABLE TRAY CHANGES	TH	JD	425I

REVISIONS

R. Vallzadeh/V. Toan/Y.L./W.L./F.C.
DESIGN OVERSIGHT
SIGN OFF DATE 01/07/14

DESIGN	BY T. Ho	CHECKED	J. Duxbury
DETAILS	BY T. Ho	CHECKED	J. Duxbury
QUANTITIES	BY T. Ho	CHECKED	J. Duxbury

PREPARED FOR THE STATE OF CALIFORNIA DEPARTMENT OF TRANSPORTATION

R. Manzanarez
PROJECT ENGINEER

BRIDGE NO. 34-0006L/R
KILOMETER POST 13.2/13.9

SAN FRANCISCO OAKLAND BAY BRIDGE
EAST SPAN SEISMIC SAFETY PROJECT
SELF-ANCHORED SUSPENSION BRIDGE
(SUPERSTRUCTURE & TOWER)

PIER W2 DETAILS NO. 6A

Rev. Date: 5-18-98

ORIGINAL SCALE IN MILLIMETERS FOR REDUCED PLANS 0 10 20 30 40 50 60 70 80 90 100

CU 04
EA 0120F1

DISREGARD PRINTS BEARING EARLIER REVISION DATES → 01/09/08

REVISION DATES (PRELIMINARY STAGE ONLY)

SHEET 355IRI OF

FILE => I:\bb\04-012001\sas\contract plans and cco\cco\cco#364\3-update 01-07-14\dgn\aapir04si.dgn

USERNAME => DMinrow DATE PLOTTED => 07 JAN 2014 TIME PLOTTED =>

100 % PS&E