DIST.	COUNTY	ROUTE	KILOMETER POST TOTAL PROJECT	SHEET NO.	TOTAL SHEETS
04	SF	80	13.2/13.9	519S27	1204

REGISTERED ENGINEER - CIVIL

01-16-14

PLANS APPROVAL DATE

REGISTERED PROFESSIONAL ENGINEER Marwan N. Nader No. C 054426 Exp. 12/31/15 CIVIL STATE OF CALIFORNIA

The State of California or its officers or agents shall not be responsible for the accuracy or completeness of electronic copies of this plan sheet.

T.Y. LIN / MOFFATT & NICHOL
825 BATTERY STREET
SAN FRANCISCO, CA 94111

Caltrans now has a web site! To get to the web site, go to: http://www.dot.ca.gov

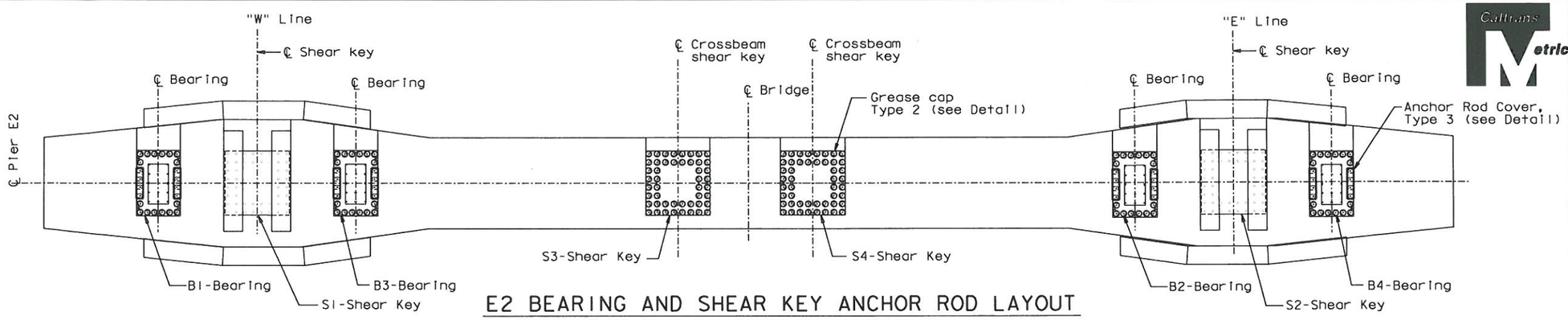

E2 BEARING AND SHEAR KEY ANCHOR ROD LAYOUT

PIER E2 PLAN AT TOP OF CONCRETE

1:100

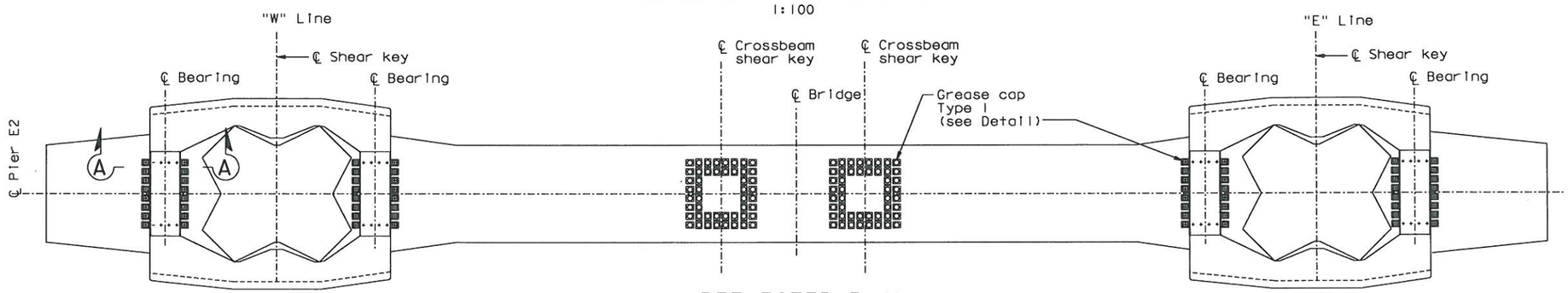

REFLECTED PLAN

1:100

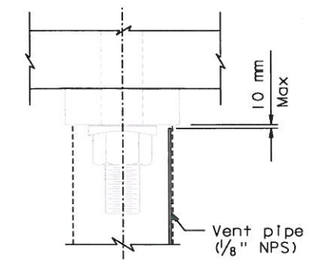

VENT TUBE DETAIL

NTS
(Typ all grease caps)

GRID LETTER →

GRID NUMBER ↓

	A	B	C	D	E	F
1	o	o	o	o	o	o
2	o					o
3	o					o
4	o					o
5	o					o
6	o					o
7	o					o
8	o	o	o	o	o	o

BEARING ROD I.D. GRID
PLAN VIEW (Looking Down)

GRID LETTER →

GRID NUMBER ↓

	A	B	C	D	E	F	G	H
1	o	o	o	o	o	o	o	o
2	o	o	o	o	o	o	o	o
3	o	o					o	o
4	o	o					o	o
5	o	o					o	o
6	o	o					o	o
7	o	o	o	o	o	o	o	o
8	o	o	o	o	o	o	o	o

SHEAR KEY ROD I.D. GRID
PLAN VIEW (Looking Down)

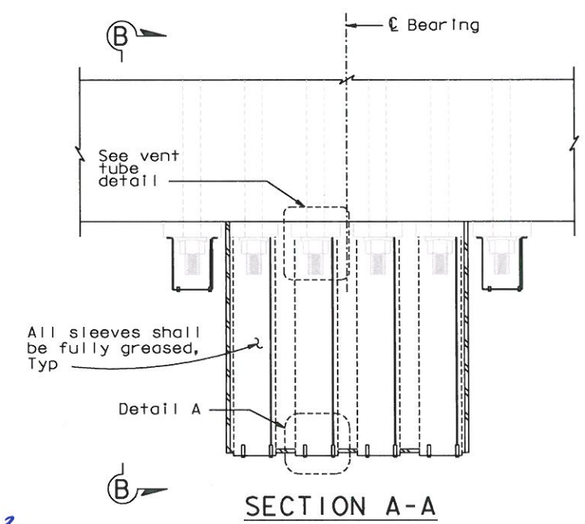

SECTION A-A

1:15
("W" Line shown, "E" Line similar)

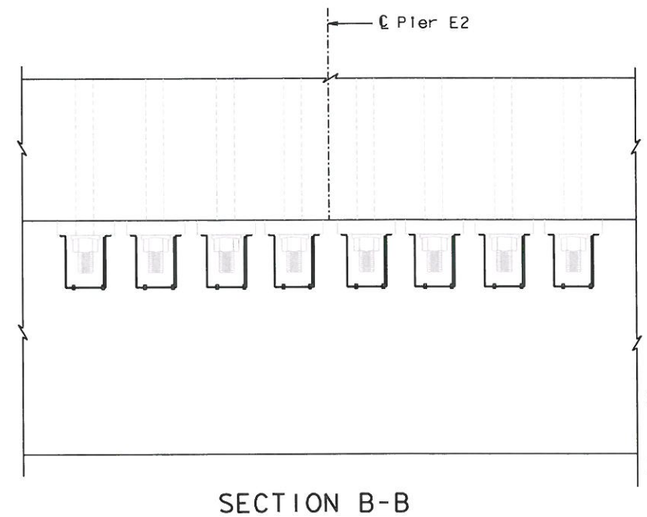

SECTION B-B

1:15
("W" Line shown, "E" Line similar)

ALL DIMENSIONS ARE IN MILLIMETERS UNLESS OTHERWISE SHOWN

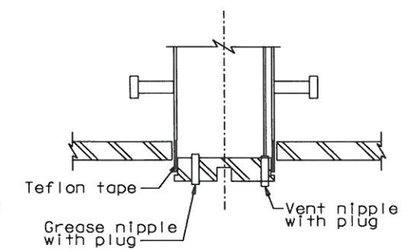

DETAIL A

1:5

NOTES:

1. Existing rods/nuts shall be wire-brushed and cleaned prior to capping and greasing.
2. All cover plates and caps shall be made from ASTM-A709M Gr 345 steel.
3. All cover plates and caps shall be coated (inside and outside) with a zinc rich primer per SPI0-1.69.

BEARING AND SHEAR KEY ANCHOR ROD I.D. KEY

B1-E8
- B1 — Bearing/Shear Key Piece Mark
- E8 — Rod Grid Number; Rod Grid Letter

CONTRACT CHANGE ORDER NO. 363
SHEET 2 OF 5

REQUESTS FOR INFORMATION NOT ADDRESSED IN THIS CCO REMAIN IN FORCE

MARK	DATE	DESCRIPTIONS	BY	CH'D	CCO#
0	01/16/14	PIER E2 BOLT CAPS	AS	MN	363

REVISIONS

A. Akinsanya / W. Long
DESIGN OVERSIGHT
SIGN OFF DATE 01/16/14

Rev. Date: 5-22-13

	BY	CHECKED
DESIGN	A. Sanjines	M. Nader
DETAILS	A. Baumberger	A. Sanjines
QUANTITIES	A. Baumberger	A. Sanjines

PREPARED FOR THE STATE OF CALIFORNIA DEPARTMENT OF TRANSPORTATION

M. Nader
PROJECT ENGINEER

CU 04
EA 0120F1

BRIDGE NO. 34-0006L/R
KILOMETER POST 13.2/13.9

SAN FRANCISCO OAKLAND BAY BRIDGE
EAST SPAN SEISMIC SAFETY PROJECT
SELF-ANCHORED SUSPENSION BRIDGE
(SUPERSTRUCTURE & TOWER)

PIER E2 BOLT CAPS NO. 1

DISREGARD PRINTS BEARING EARLIER REVISION DATES → 01/16/14

SHEET 102S27 OF

ORIGINAL SCALE IN MILLIMETERS FOR REDUCED PLANS 0 10 20 30 40 50 60 70 80 90 100

FILE => I:\bb\04-012001\sas\contract plans and cco\cco\cco#363\2-update 01-16-14\dgn\aepir37.dgn

100 % PS&E

USERNAME => PHUA DATE PLOTTED => 16 JAN 2014 TIME PLOTTED => 09:48:56

DIST.	COUNTY	ROUTE	KILOMETER POST TOTAL PROJECT	SHEET NO.	TOTAL SHEETS
04	SF	80	13.2/13.9	519S28	1204

REGISTERED ENGINEER - CIVIL

01-16-14
PLANS APPROVAL DATE

REGISTERED PROFESSIONAL ENGINEER Marwan N. Nader No. C 054426 Exp. 12/31/15 CIVIL STATE OF CALIFORNIA

The State of California or its officers or agents shall not be responsible for the accuracy or completeness of electronic copies of this plan sheet.

T.Y. LIN / MOFFATT & NICHOL
825 BATTERY STREET
SAN FRANCISCO, CA 94111

Caltrans now has a web site! To get to the web site, go to: http://www.dot.ca.gov

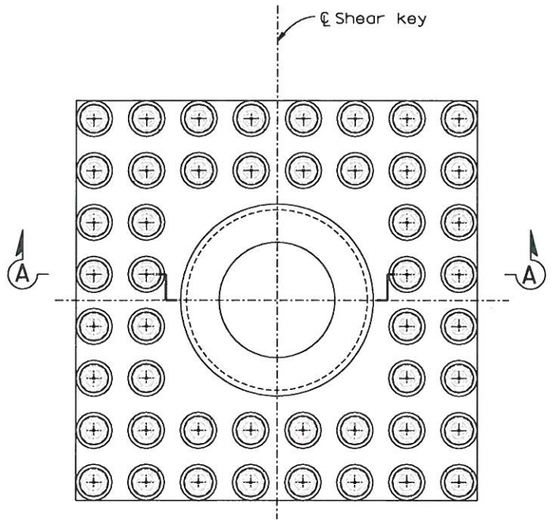

PLAN - SHEAR KEY 3 & 4 STUB
1:20

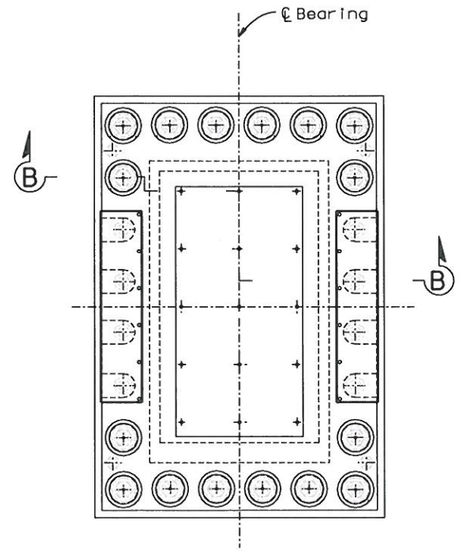

PLAN - BEARING HOLD DOWN ASSEMBLY
1:20

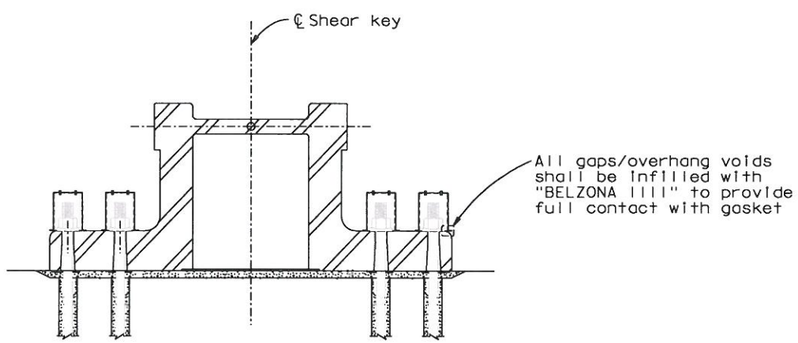

SECTION A-A
1:20

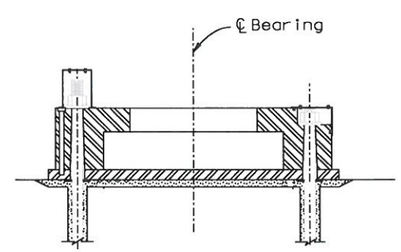

SECTION B-B
1:20

CONTRACT CHANGE ORDER NO. 363
SHEET 3 OF 5

REQUESTS FOR INFORMATION NOT ADDRESSED IN THIS CCO REMAIN IN FORCE

ALL DIMENSIONS ARE IN MILLIMETERS UNLESS OTHERWISE SHOWN

A. Akinsanya / W. Long
DESIGN OVERSIGHT
SIGN OFF DATE 01/16/14

MARK	DATE	DESCRIPTIONS	BY	CH'D	CCO#
0	01/16/14	PIER E2 BOLT CAPS	AS	MN	363

REVISIONS

DESIGN	BY A. Sanjines	CHECKED M. Nader	
DETAILS	BY A. Baumberger	CHECKED A. Sanjines	
QUANTITIES	BY A. Baumberger	CHECKED A. Sanjines	

PREPARED FOR THE STATE OF CALIFORNIA DEPARTMENT OF TRANSPORTATION

M. Nader
PROJECT ENGINEER

BRIDGE NO. 34-0006L/R
KILOMETER POST 13.2/13.9

SAN FRANCISCO OAKLAND BAY BRIDGE
EAST SPAN SEISMIC SAFETY PROJECT
SELF-ANCHORED SUSPENSION BRIDGE
(SUPERSTRUCTURE & TOWER)

PIER E2 BOLT CAPS NO. 2

Rev. Date: 5-22-13

ORIGINAL SCALE IN MILLIMETERS FOR REDUCED PLANS 0 10 20 30 40 50 60 70 80 90 100

CU 04
EA 0120F1

DISREGARD PRINTS BEARING EARLIER REVISION DATES

REVISION DATES (PRELIMINARY STAGE ONLY) 01/16/14

SHEET 102S28 OF

FILE => I:\bb\04-012001\sas\contract plans and cco\cco\cco#363\2-update 01-16-14\dgn\aeplr38.dgn

100 % PS&E

DATE PLOTTED => 16 JAN 2014 TIME PLOTTED => 09:51:43

USERNAME => PHua

DIST.	COUNTY	ROUTE	KILOMETER POST TOTAL PROJECT	SHEET NO.	TOTAL SHEETS
04	SF	80	13.2/13.9	519S29	1204

REGISTERED ENGINEER - CIVIL

01-16-14
PLANS APPROVAL DATE

REGISTERED PROFESSIONAL ENGINEER Marwan N. Nader No. C 054426 Exp. 12/31/15 CIVIL STATE OF CALIFORNIA

The State of California or its officers or agents shall not be responsible for the accuracy or completeness of electronic copies of this plan sheet.

T.Y. LIN / MOFFATT & NICHOL
825 BATTERY STREET
SAN FRANCISCO, CA 94111

Caltrans now has a web site! To get to the web site, go to: http://www.dot.ca.gov

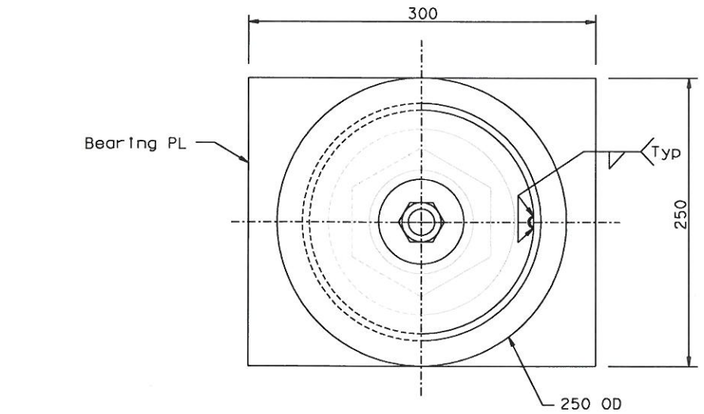

REFLECTED PLAN

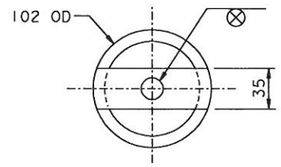

SECTION A-A

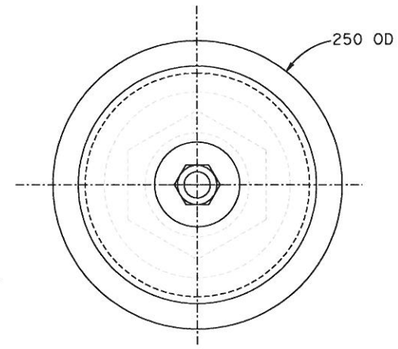

PLAN

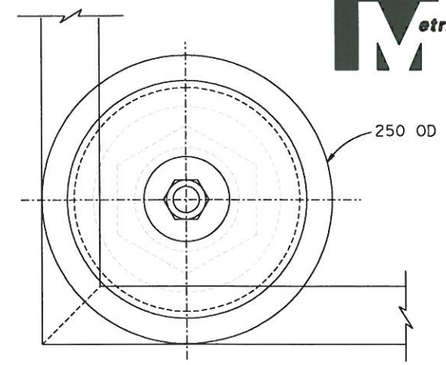

PLAN

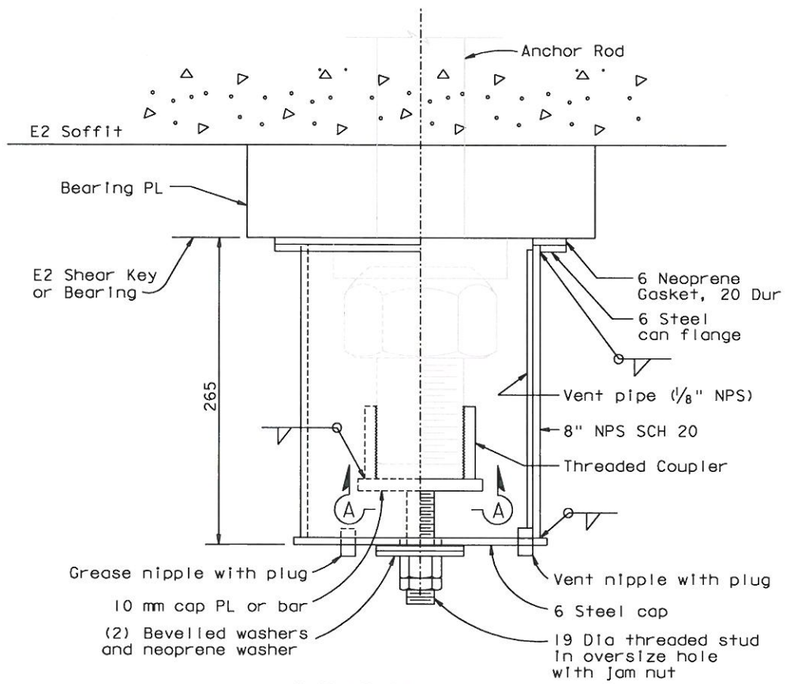

ELEVATION / SECTION

ANCHOR ROD
GREASE CAP-TYPE 1

1:2.5

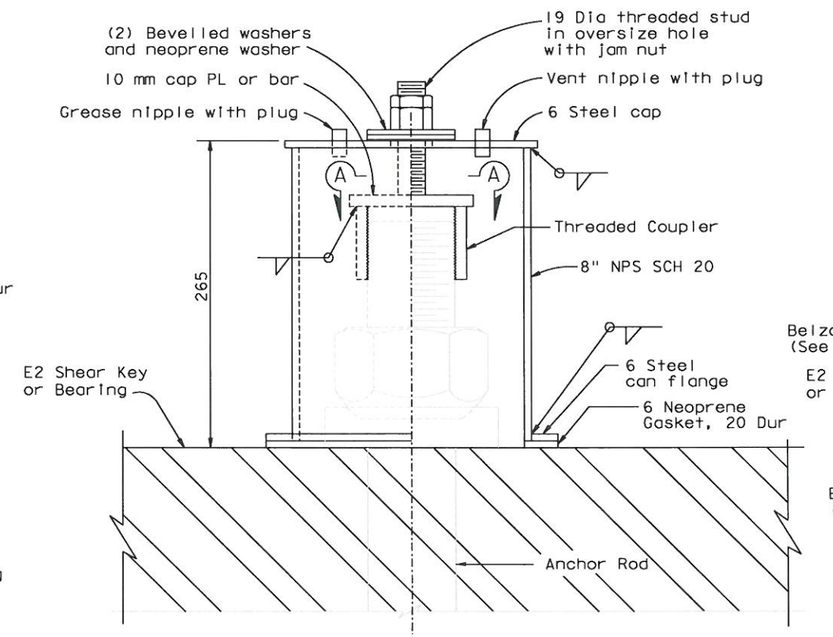

ELEVATION / SECTION

ANCHOR ROD
GREASE CAP-TYPE 2

1:2.5

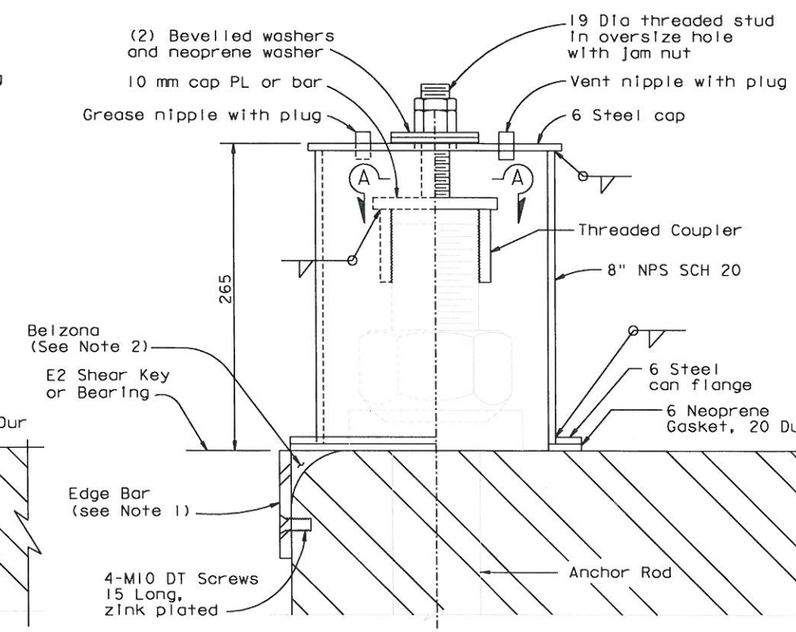

ELEVATION / SECTION

ANCHOR ROD
GREASE CAP-TYPE 2 AT EDGE

1:2.5

NOTES:

1. At the Contractor's option, temporary formwork may be used in lieu of edge bar with tapped screws.
2. Belzona 1111 surfaces shall be flush with casting surfaces and ground smooth.

ALL DIMENSIONS ARE IN MILLIMETERS UNLESS OTHERWISE SHOWN

CONTRACT CHANGE ORDER NO. 363
SHEET 4 OF 5

REQUESTS FOR INFORMATION NOT ADDRESSED IN THIS CCO REMAIN IN FORCE

A. Akinsanya / W. Long
DESIGN OVERSIGHT
SIGN OFF DATE 01/16/14

MARK	DATE	DESCRIPTIONS	BY	CH'D	CCO#
0	01/16/14	PIER E2 BOLT CAPS	AS	MN	363

REVISIONS

DESIGN	BY A. Sanjines	CHECKED M. Nader	
DETAILS	BY A. Baumberger	CHECKED A. Sanjines	
QUANTITIES	BY A. Baumberger	CHECKED A. Sanjines	

PREPARED FOR THE STATE OF CALIFORNIA DEPARTMENT OF TRANSPORTATION

M. Nader
PROJECT ENGINEER

BRIDGE NO. 34-0006L/R
KILOMETER POST 13.2/13.9

SAN FRANCISCO OAKLAND BAY BRIDGE
EAST SPAN SEISMIC SAFETY PROJECT
SELF-ANCHORED SUSPENSION BRIDGE
(SUPERSTRUCTURE & TOWER)

PIER E2 BOLT CAPS NO. 3

Rev. Date: 5-22-13

ORIGINAL SCALE IN MILLIMETERS FOR REDUCED PLANS 0 10 20 30 40 50 60 70 80 90 100

CU 04
EA 0120F1

DISREGARD PRINTS BEARING EARLIER REVISION DATES

REVISION DATES (PRELIMINARY STAGE ONLY) 01/16/14

SHEET 102S29 OF

FILE => I:\bb\04-012001\sas\contract plans and cco\cco\cco#363\2-update 01-16-14\dgn\aep1r39.dgn

USERNAME => PHUA DATE PLOTTED => 16 JAN 2014 TIME PLOTTED => 09:53:04

100 % PS&E

DIST.	COUNTY	ROUTE	KILOMETER POST TOTAL PROJECT	SHEET NO.	TOTAL SHEETS
04	SF	80	13.2/13.9	519530	1204

REGISTERED ENGINEER - CIVIL

01-16-14

PLANS APPROVAL DATE

REGISTERED PROFESSIONAL ENGINEER Marwan N. Nader No. C 054426 Exp. 12/31/15 CIVIL STATE OF CALIFORNIA

The State of California or its officers or agents shall not be responsible for the accuracy or completeness of electronic copies of this plan sheet.

T.Y. LIN / MOFFATT & NICHOL
825 BATTERY STREET
SAN FRANCISCO, CA 94111

Caltrans now has a web site! To get to the web site, go to: http://www.dot.ca.gov

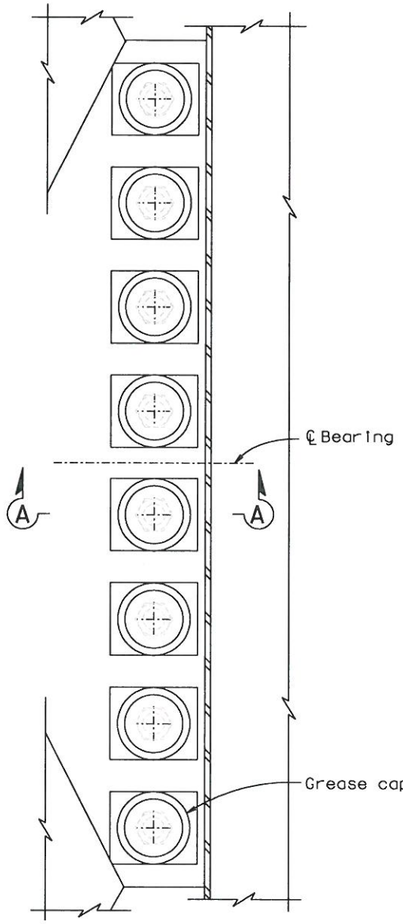

REFLECTED PLAN - ANCHOR ROD GREASE CAP TYPE 1 (AT BEARING)

1:10 (See Note 1)

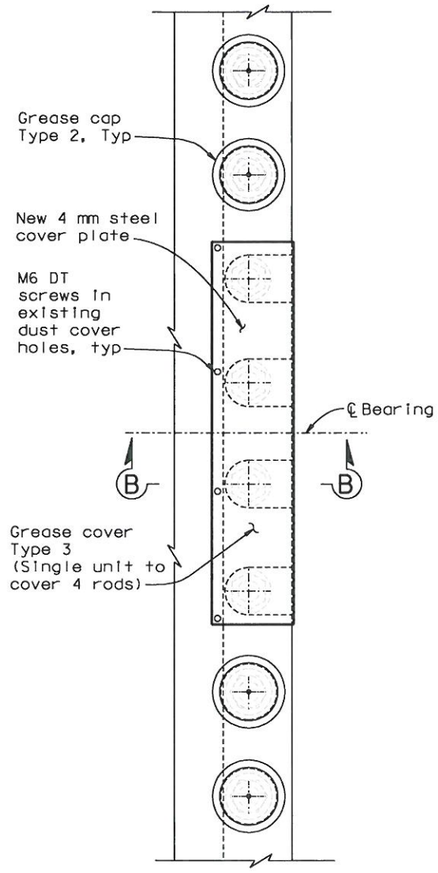

PLAN - ANCHOR ROD PROTECTION COVER-TYPE 3

1:10

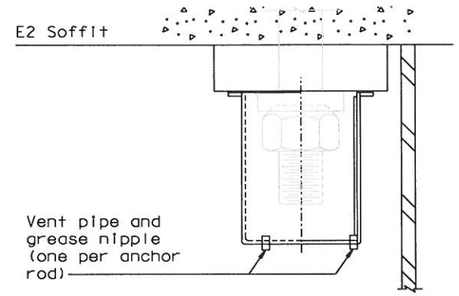

SECTION A-A

1:5

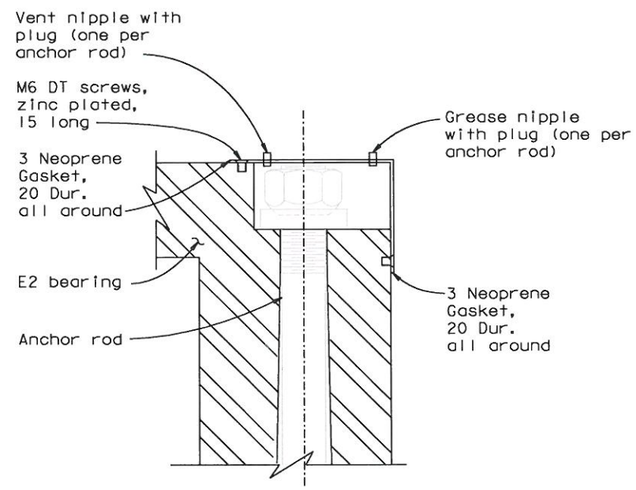

SECTION B-B

1:5

NOTES:

1. For Details not shown, see "Pier E2 Grease Cap No.3" sheet.

CONTRACT CHANGE ORDER NO. 363
SHEET 5 OF 5

REQUESTS FOR INFORMATION NOT ADDRESSED IN THIS CCO REMAIN IN FORCE

ALL DIMENSIONS ARE IN MILLIMETERS UNLESS OTHERWISE SHOWN

A. Akinsanya / W. Long
DESIGN OVERSIGHT
SIGN OFF DATE 01/16/14

MARK	DATE	DESCRIPTIONS	BY	CH'D	CCO#
0	01/16/14	PIER E2 BOLT CAPS	AS	MN	363

REVISIONS

	BY	CHECKED
DESIGN	A. Sanjines	M. Nader
DETAILS	A. Baumberger	A. Sanjines
QUANTITIES	A. Baumberger	A. Sanjines

PREPARED FOR THE STATE OF CALIFORNIA DEPARTMENT OF TRANSPORTATION

M. Nader
PROJECT ENGINEER

BRIDGE NO. 34-0006L/R
KILOMETER POST 13.2/13.9

SAN FRANCISCO OAKLAND BAY BRIDGE
EAST SPAN SEISMIC SAFETY PROJECT
SELF-ANCHORED SUSPENSION BRIDGE
(SUPERSTRUCTURE & TOWER)

PIER E2 BOLT CAPS NO. 4

Rev. Date: 5-22-13

ORIGINAL SCALE IN MILLIMETERS FOR REDUCED PLANS 0 10 20 30 40 50 60 70 80 90 100

CU 04
EA 0120F1

DISREGARD PRINTS BEARING EARLIER REVISION DATES 01/16/14

REVISION DATES (PRELIMINARY STAGE ONLY)

SHEET 102530 OF

100 % PS&E

DATE PLOTTED => 16 JAN 2014 TIME PLOTTED => 09:54:08

USERNAME => PHua

FILE => I:\bb\04-012001\sas\contract plans and cco\cco\cco#363\2-update 01-16-14\dgn\oepir40.dgn