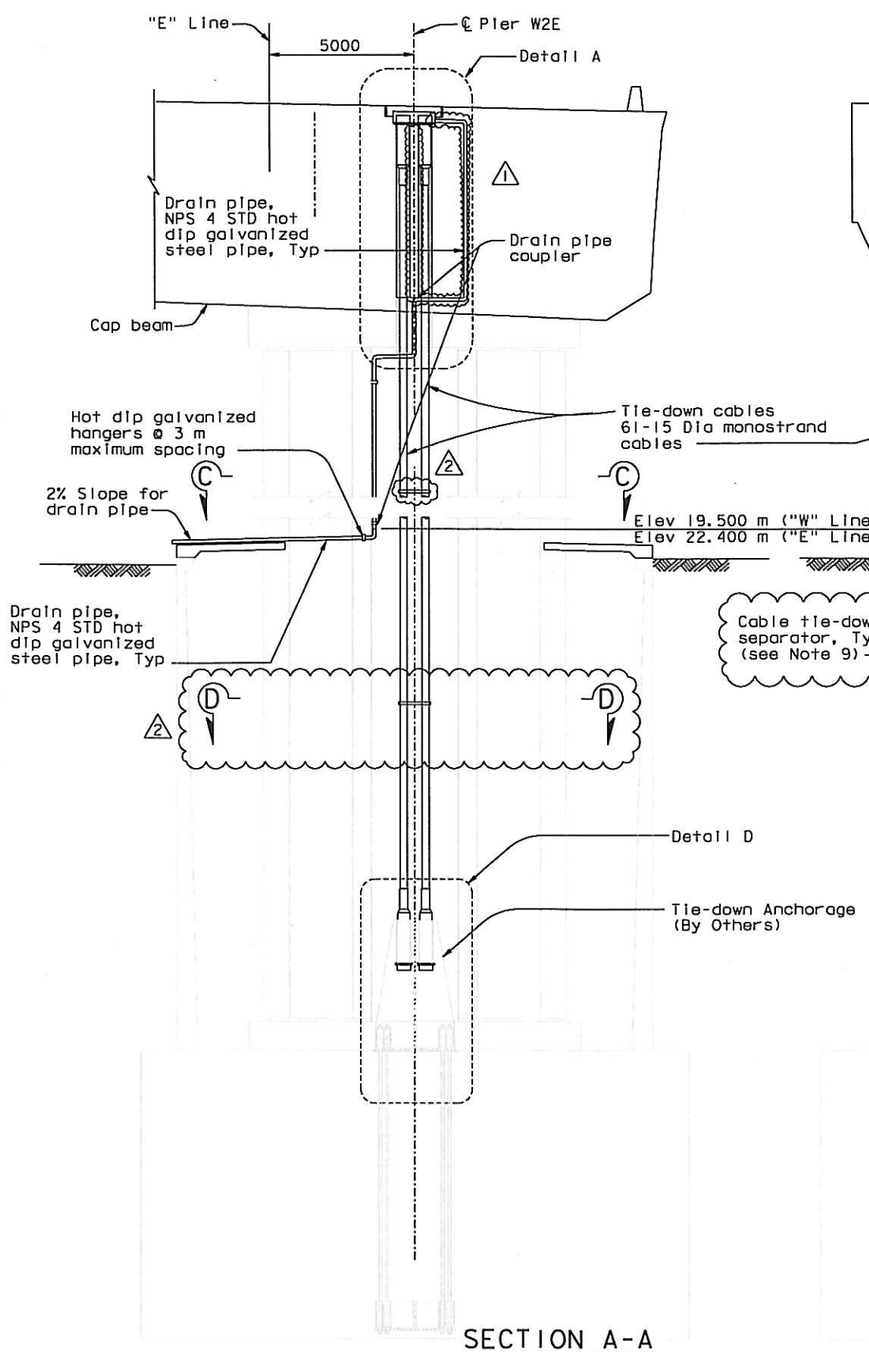

SECTION A-A
1:100

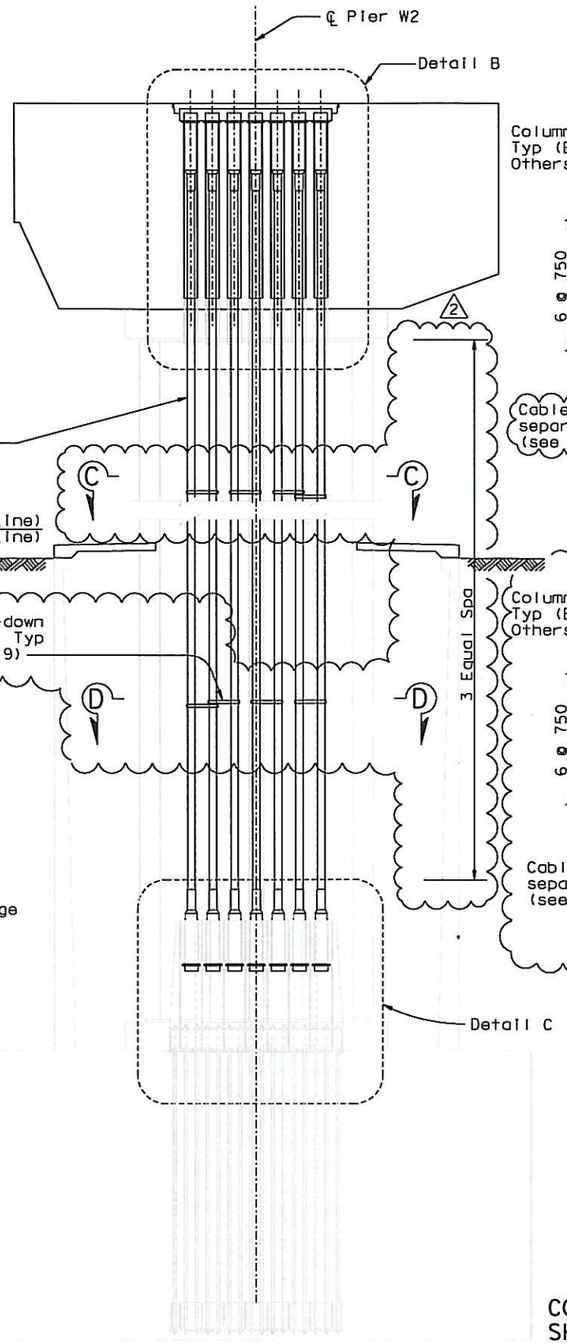

SECTION B-B
1:100

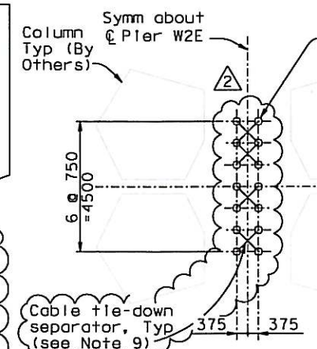

SECTION C-C
1:100

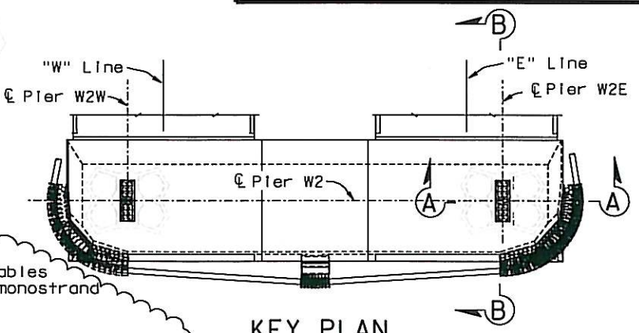

KEY PLAN
1:400

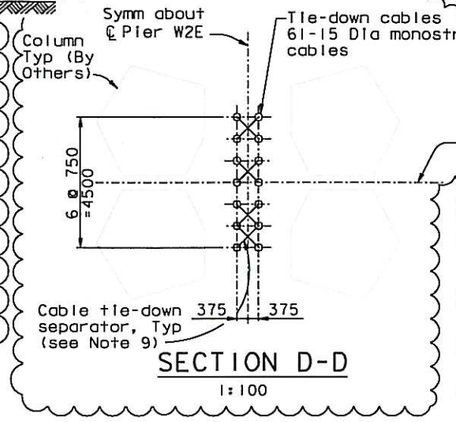

SECTION D-D
1:100

NOTES:

1. Tie-down cables shall be of ASTM A416 Grade 270 (fu=1860 MPa) seven wire, low relaxation monostrands, unless specified otherwise.
2. For Details A and B, see "Cable Tie-Down Details No. 3" sheet.
3. For Details C and D, see "Cable Tie-Down Details No. 4" sheet.
4. For additional prestressing details, see "Prestressing Notes" sheet.
5. For general stressing sequence, see "Pier W2 Construction Sequence" sheet.
6. Jacking force in the tie-down cables shall be 8570 kN typical.
7. For tie-down cable details, see "Cable Tie-Down Details No. 2" sheet.
8. For "Cable Tie-Down Details" sheets, the Contractor shall verify all controlling field dimensions before ordering or fabricating any material.
2. 9. For Cable tie-down Separator details, see "Cable Tie-Down Details No. 5" sheet.

DIST.	COUNTY	ROUTE	KILOMETER POST TOTAL PROJECT	SHEET NO.	TOTAL SHEETS
04	SF	80	13.2/13.9	520R2	1204

REGISTERED ENGINEER - CIVIL
John Sun, No. C 54648, Exp. 12/31/05, CIVIL, REGISTERED PROFESSIONAL ENGINEER, STATE OF CALIFORNIA
12-6-04
PLANS APPROVAL DATE

The State of California or its officers or agents shall not be responsible for the accuracy or completeness of electronic copies of this plan sheet.

T.Y. LIN / MOFFATT & NICHOL
825 BATTERY STREET
SAN FRANCISCO, CA 94111

Caltrans now has a web site! To get to the web site, go to: http://www.dot.ca.gov

REGISTERED PROFESSIONAL ENGINEER, James P. Duxbury, No. C 64677, Exp. 06/30/15, CIVIL, STATE OF CALIFORNIA
FOR REVISIONS ONLY

CONTRACT CHANGE ORDER NO. 357
SHEET 2 OF 4

100% PS&E

USERNAME => DWinrow DATE PLOTTED => 14 MAR 2014 TIME PLOTTED => 12:03:56

REQUESTS FOR INFORMATION NOT ADDRESSED IN THIS CCO REMAIN IN FORCE

MARK	DATE	DESCRIPTIONS	BY	CH'D	CCO#
2	10/01/13	W2 CABLE TIE-DOWN	JD	MN	357
1	07/21/06	W2 CAP BEAM ISD	JD	NV	23

REVISIONS

R. Valizadeh/V. Toan/Y.L./W.L./F.C.
DESIGN OVERSIGHT
SIGN OFF DATE 10/01/13

	BY	CHECKED
DESIGN	J. Sun	J. Straski
DETAILS	S. Shi	J. Straski
QUANTITIES	J. Duxbury	S. Shi

PREPARED FOR THE STATE OF CALIFORNIA
DEPARTMENT OF TRANSPORTATION

R. Manzanarez
PROJECT ENGINEER

ALL DIMENSIONS ARE IN MILLIMETERS UNLESS OTHERWISE SHOWN

BRIDGE NO. 34-0006L/R
KILOMETER POST 13.2/13.9

SAN FRANCISCO OAKLAND BAY BRIDGE
EAST SPAN SEISMIC SAFETY PROJECT
SELF-ANCHORED SUSPENSION BRIDGE
(SUPERSTRUCTURE & TOWER)

CABLE TIE-DOWN DETAILS NO. 1

Rev. Date: 5-18-98

ORIGINAL SCALE IN MILLIMETERS FOR REDUCED PLANS 0 10 20 30 40 50 60 70 80 90 100

CU 04
EA 0120F1

DISREGARD PRINTS BEARING EARLIER REVISION DATES

REVISION DATES (PRELIMINARY STAGE ONLY): 05/15/98 | 08/25/99 | 05/31/01 | 01/09/02 | 07/01/02 | 12/13/02

SHEET 103R2 OF

FILE => I:\bb\04-012001\sas\contract plans and cco\post sso cco\cco=357 - w2 cable tie down\2-revision 03-14-14\dgn\aaptd01.dgn

DIST.	COUNTY	ROUTE	KILOMETER POST TOTAL PROJECT	SHEET NO.	TOTAL SHEETS
04	SF	80	13.2/13.9	521R2	1204

REGISTERED ENGINEER - CIVIL

12-6-04

PLANS APPROVAL DATE

REGISTERED PROFESSIONAL ENGINEER John Sun No. C 54648 Exp. 12/31/05 CIVIL STATE OF CALIFORNIA

The State of California or its officers or agents shall not be responsible for the accuracy or completeness of electronic copies of this plan sheet.

T.Y. LIN / MOFFATT & NICHOL
825 BATTERY STREET
SAN FRANCISCO, CA 94111

Caltrans now has a web site! To get to the web site, go to: http://www.dot.ca.gov

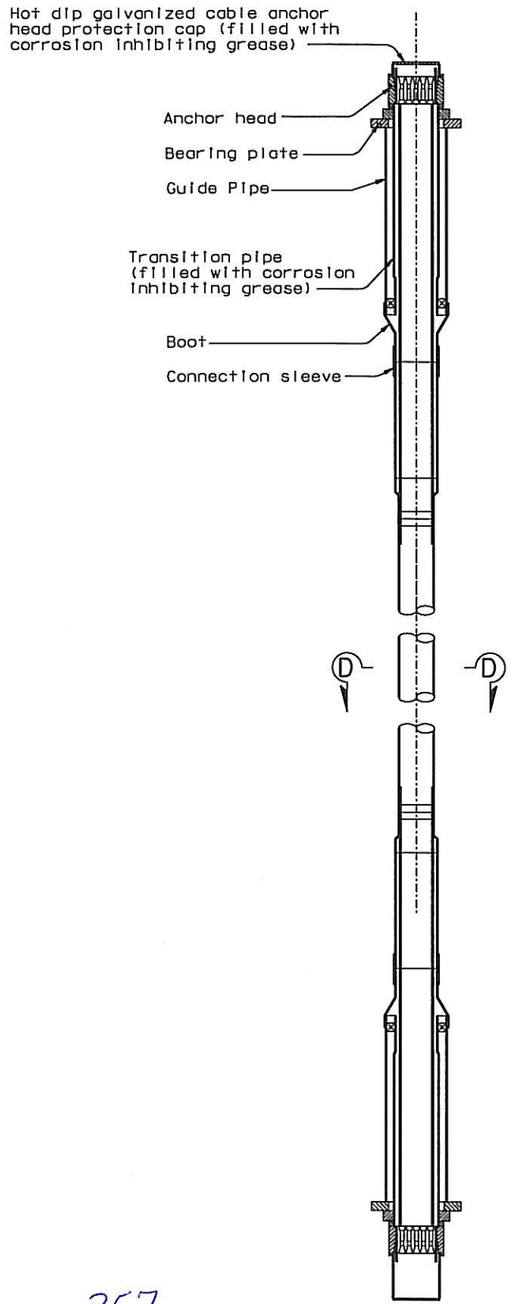

DEAD END

JACKING END

(For illustration only)

TIE-DOWN CABLE DETAILS

1:20

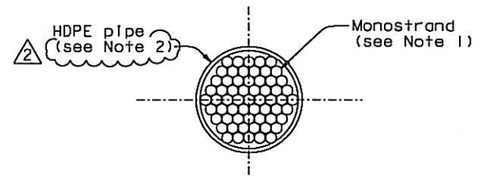

SECTION D-D

NTS

LEGEND:

HDPE - High density polyethylene.

NOTES:

1. Each individual monostrand shall be fully coated with corrosion inhibiting grease and then encapsulated by a high-density polyethylene (HDPE) or high-density polypropylene (HDPP) smooth sheath.
2. HDPE pipe shall be grouted with non-shrink grout. Injection post and exhaust post details shall be submitted to the Engineer for review and approval.

100 % PS&E

REGISTERED PROFESSIONAL ENGINEER Marvan N. Nader No. C 054426 Exp. 12/31/13 CIVIL STATE OF CALIFORNIA

FOR REVISIONS ONLY

CONTRACT CHANGE ORDER NO. 357
SHEET 3 OF 4

REQUESTS FOR INFORMATION NOT ADDRESSED IN THIS CCO REMAIN IN FORCE

ALL DIMENSIONS ARE IN MILLIMETERS UNLESS OTHERWISE SHOWN

R. Valizadeh/V. Toan/Y.L./W.L./F.C.
DESIGN OVERSIGHT
Roger Valizadeh / Vong Toan / Y. Liu
SIGN OFF DATE 10/01/13

MARK	DATE	DESCRIPTIONS	BY	CH'D	CCO#
2	10/01/13	W2 CABLE TIE-DOWN	JD	MN	357
1	07/21/06	REMOVE EPOXY COATING	MN	NV	22

REVISIONS

	BY	CHECKED
DESIGN	J. Sun	J. Straski
DETAILS	S. Shi	J. Straski
QUANTITIES	J. Duxbury	S. Shi

PREPARED FOR THE STATE OF CALIFORNIA DEPARTMENT OF TRANSPORTATION

R. Manzanarez
PROJECT ENGINEER

BRIDGE NO. 34-0006L/R
KILOMETER POST 13.2/13.9

SAN FRANCISCO OAKLAND BAY BRIDGE
EAST SPAN SEISMIC SAFETY PROJECT
SELF-ANCHORED SUSPENSION BRIDGE
(SUPERSTRUCTURE & TOWER)

CABLE TIE-DOWN DETAILS NO. 2

Rev. Date: 5-18-98

ORIGINAL SCALE IN MILLIMETERS FOR REDUCED PLANS 0 10 20 30 40 50 60 70 80 90 100

CU 04
EA 0120F1

DISREGARD PRINTS BEARING EARLIER REVISION DATES

REVISION DATES (PRELIMINARY STAGE ONLY) 05/18/99 08/02/99 05/31/01 04/08/02 07/01/02 12/19/02

SHEET 104R1 OF

FILE => I:\bb\04-012001\sas\contract plans and cco\post sso cco\cco#357 - w2 cable tie down\2-revision 03-14-14\dgn\aeptd02.dgn

USERNAME => DWinrow DATE PLOTTED => 14 MAR 2014 TIME PLOTTED => 12:02:45

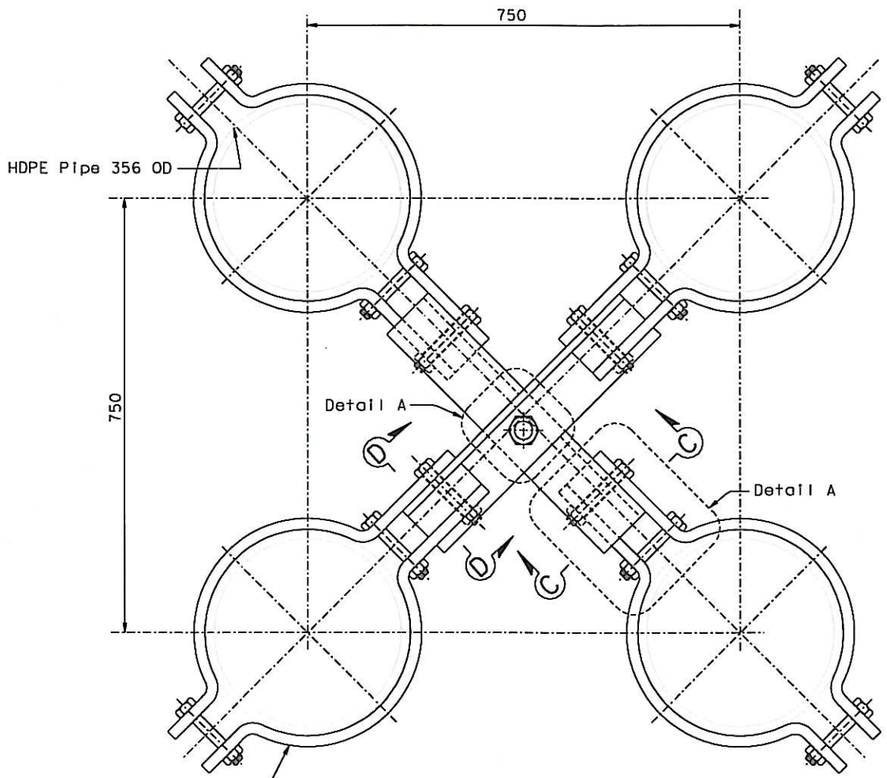

W2 CABLE TIE-DOWN SEPARATOR
1:5

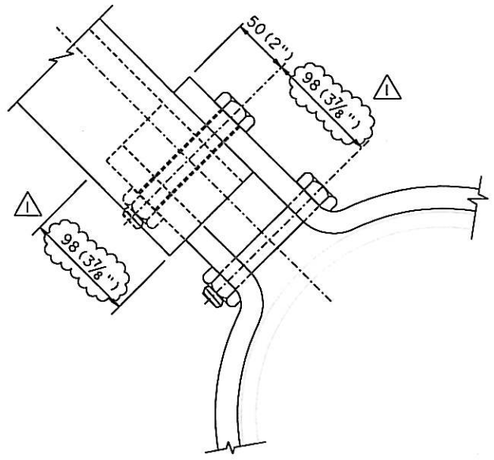

DETAIL A
1:2.5

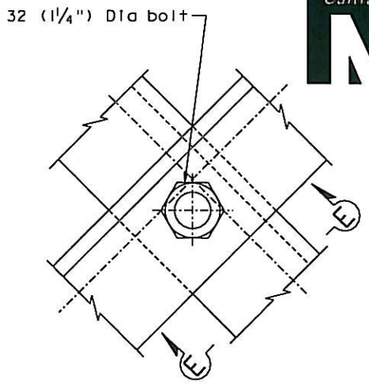

DETAIL B
1:2.5

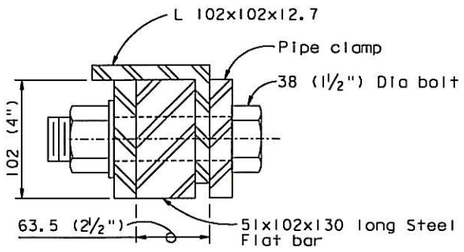

SECTION C-C
1:2.5

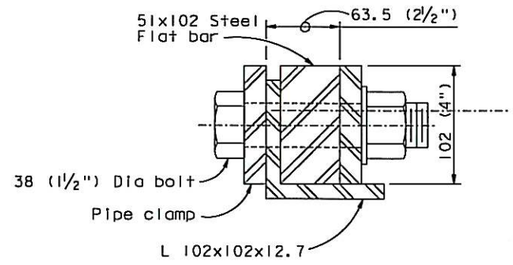

SECTION D-D
1:2.5

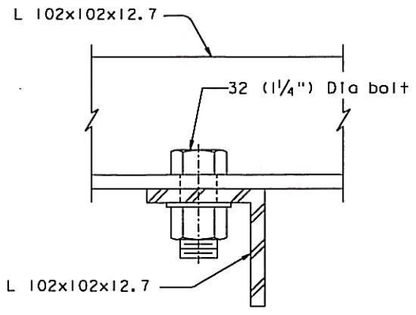

SECTION E-E
1:2.5

CONTRACT CHANGE ORDER NO. 357
SHEET 4 OF 4

REQUESTS FOR INFORMATION NOT ADDRESSED IN THIS CCO REMAIN IN FORCE

NOTES:

1. Heavy duty double bolt pipe clamp for 350 mm (14") pipe with 19 mm (3/4") thickness and 38 mm (1½") bolts.
2. All bolts shall be installed snug tight and all nuts shall be secured with thread locking compound.
3. All tie-down separator components shall be galvanized and painted.

100 % PS&E

ALL DIMENSIONS ARE IN MILLIMETERS UNLESS OTHERWISE SHOWN

DIST.	COUNTY	ROUTE	KILOMETER POST TOTAL PROJECT	SHEET NO.	TOTAL SHEETS
04	SF	80	13.2/13.9	523SIRI	1204

REGISTERED ENGINEER - CIVIL
10-01-13
PLANS APPROVAL DATE

Tien Hung Ho, No. C 43990, Exp. 06/30/15, CIVIL, REGISTERED PROFESSIONAL ENGINEER, STATE OF CALIFORNIA

The State of California or its officers or agents shall not be responsible for the accuracy or completeness of electronic copies of this plan sheet.

T.Y. LIN / MOFFATT & NICHOL
825 BATTERY STREET
SAN FRANCISCO, CA 94111

Caltrans now has a web site! To get to the web site, go to: http://www.dot.ca.gov

MARK	DATE	DESCRIPTIONS	BY	CH'D	CCO#
1	03/14/14	W2 CABLE TIE-DOWN	AB	MN	357
0	10/01/13	W2 CABLE TIE-DOWN	AB	MN	357

REVISIONS

DESIGN BY A. Baumberger CHECKED M. Nader
DETAILS BY A. Baumberger CHECKED M. Nader
QUANTITIES BY A. Baumberger CHECKED M. Nader

A. Akinsanya / W. Lang
DESIGN OVERSIGHT
SIGN OFF DATE 03/14/14

PREPARED FOR THE STATE OF CALIFORNIA DEPARTMENT OF TRANSPORTATION

M. Nader
PROJECT ENGINEER

BRIDGE NO. 34-0006L/R
KILOMETER POST 13.2/13.9

SAN FRANCISCO OAKLAND BAY BRIDGE
EAST SPAN SEISMIC SAFETY PROJECT
SELF-ANCHORED SUSPENSION BRIDGE
(SUPERSTRUCTURE & TOWER)

CABLE TIE-DOWN DETAILS NO. 5

Rev. Date: 5-18-98

ORIGINAL SCALE IN MILLIMETERS FOR REDUCED PLANS 0 10 20 30 40 50 60 70 80 90 100

CU 04
EA 0120F1

DISREGARD PRINTS BEARING EARLIER REVISION DATES →

REVISION DATES (PRELIMINARY STAGE ONLY): 10/01/13

SHEET 106SIRI OF

FILE => I:\bb\04-012001\sas\contract plans and cco\post sso cco\cco#357 - w2 cable tie down\2-revision 03-14-14\dgn\aeptd04a.dgn

USERNAME => DMinrow DATE PLOTTED => 14 MAR 2014