| DIST | COUNTY | ROUTE | KILOMETER POST TOTAL PROJECT | SHEET NO | TOTAL SHEETS |
|---|---|---|---|---|---|
| 04 | SF | 80 | 13.2/13.9 | 49R1 | 1204 |

Bobby J. Melvin 12/19/2002
REGISTERED MECHANICAL ENGINEER DATE

12-6-04
PLANS APPROVAL DATE

REGISTERED PROFESSIONAL ENGINEER Bobby J. Melvin No. 28685 Exp. 6/30/05 MECHANICAL STATE OF CALIFORNIA

PARSONS BRINCKERHOFF QUADE & DOUGLAS, INC.
303 SECOND STREET, SUITE 700 N
SAN FRANCISCO, CA 94107

*The State of California or its officers or agents shall not be responsible for the accuracy or completeness of electronic copies of this plan sheet.*

*Caltrans now has a web site! To get to the web site, go to http://www.dot.ca.gov*

Caltrans Metric

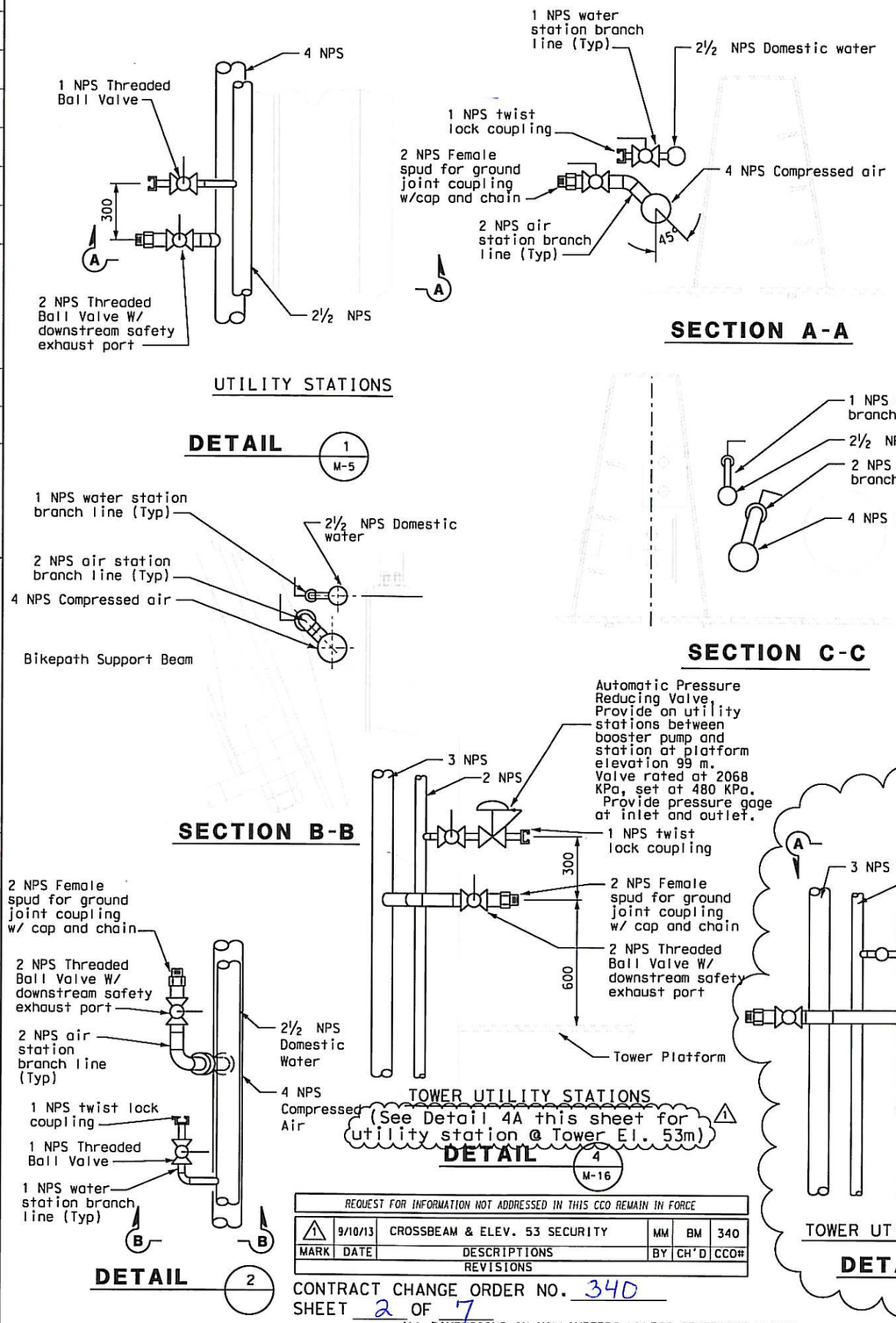


Table for Detail 1

| Pipe | Size "X" (NPS) | Tee Size |
|---|---|---|
| CCSF Sewer | 3 | 6 NPS |
| CCSF Water | 3 | 6 NPS |
| Reclaim Water | 2 | 4 NPS |

Table for Detail 5

| Pipe | Size "X" (NPS) | Valve Type |
|---|---|---|
| CCSF Sewer | 2 | Gate |
| CCSF Water | 2 | Gate |
| CCSF Reclaim Water | 1 | Gate |
| Domestic Water | 1 | Ball |

| MARK | DATE | DESCRIPTIONS | BY | CH'D | CCO# |
|---|---|---|---|---|---|
| 1 | 9/10/13 | CROSSBEAM & ELEV. 53 SECURITY | MM | BM | 340 |

REQUEST FOR INFORMATION NOT ADDRESSED IN THIS CCO REMAIN IN FORCE

REVISIONS

CONTRACT CHANGE ORDER NO. 340
SHEET 2 OF 7

ALL DIMENSIONS IN MILLIMETERS UNLESS OTHERWISE SHOWN

# MECHANICAL PIPING SECTIONS AND DETAILS NO. 3

NO SCALE

M-13

| DATE | REVISED BY | DATE REVISED |
|---|---|---|
| 10/31/02 | BM | KH |
| 11/15/02 | | |

CALCULATED/DESIGNED BY — CHECKED BY

PROJECT ENGINEER: Rich Newell

STATE OF CALIFORNIA - DEPARTMENT OF TRANSPORTATION

Caltrans

FOR REDUCED PLANS ORIGINAL SCALE IS IN MILLIMETERS 0 20 40 60 80

USERNAME => Melsheimer
DGN FILE => 04-0120F1_0049R1.dgn

CU 04251

EA 0120F1

LAST REVISION 00-00-00

DATE PLOTTED => 9/10/2013
TIME PLOTTED => 10:07:35 AM

| DIST | COUNTY | ROUTE | KILOMETER POST TOTAL PROJECT | SHEET No | TOTAL SHEETS |
|---|---|---|---|---|---|
| 04 | SF | 80 | 13.2/13.9 | 271 S1R2 | 1204 |

REGISTERED ELECTRICAL ENGINEER 9/11/08 DATE

PLANS APPROVAL DATE

REGISTERED PROFESSIONAL ENGINEER FADI WALIEDDINE No. 11465 Exp. 12/31/2009 ELECTRICAL STATE OF CALIFORNIA

PB AMERICAS, Inc.
A Parsons Brinckerhoff Company
303 Second St., Suite 700N
San Francisco, CA 94107-1317

*The State of California or its officers or agents shall not be responsible for the accuracy or completeness of electronic copies of this plan sheet.*

*Caltrans now has a web site! To get to the web site, go to http://www.dot.ca.gov*

Caltrans Metric

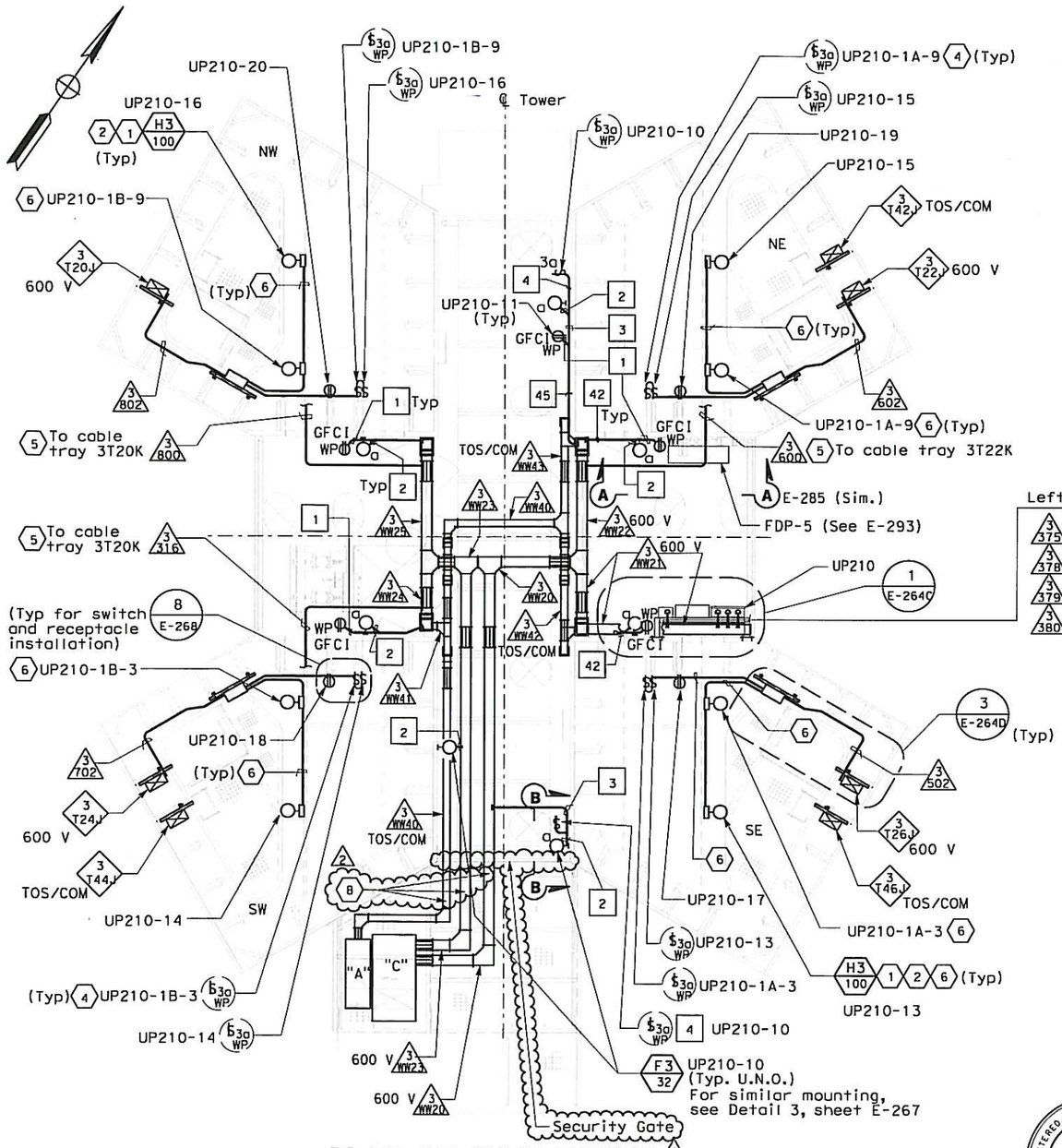


## PLAN AT MAIN TOWER AT ELEV 53.85 m

SCALE 1:40

Some conduit & equipment are not shown for clarity. See sheet E-264 for layout of equipment. Circuits shown are for SE tower shaft. Circuit for other shafts shown on E-274, E-275 and E-275A.

Left to Right
- To Disc.
- To UP-210
- To UP-210
- To UP-210 (7)

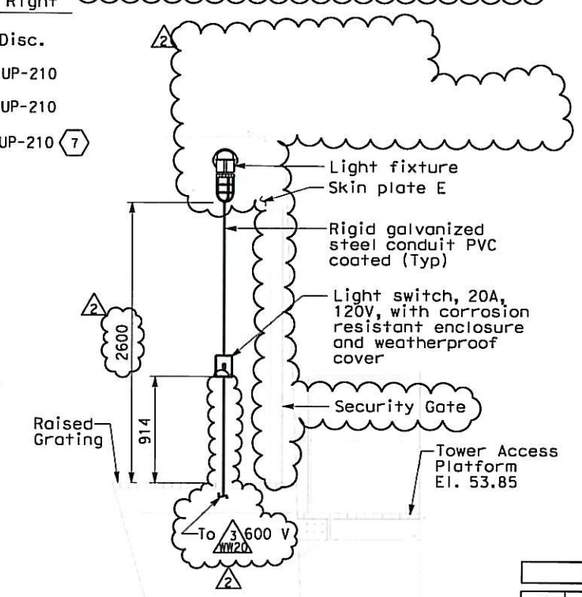


## SECTION B-B

NO SCALE

## SHEET NOTES:

1. Light shown mounted under ceiling diaphragm.
2. Typical light mounting details shown on sheet E-283.
3. Deleted
4. Multiple switches at certain elevations. See sheets E-284, E-284A and E-284B for details.
5. Conduits are at El. 56.422 and connected to 600 V cable tray at this elevation inside respective tower shaft, see Detail 3 on sheet E-264L.
6. Number and sizes of conduit are field route to lights, receptacles and switches. See E-284 and E-284A for conduit sizes and pull box type per location.
7. Install #2 Bare copper wire (bonding jumper) in conduit and wireway.
8. Contractor to install 58x229 'Not a Step' self-adhesive label on wireways. Use EMEDCO Part #OS3594 or equal.

## NOTES:

1. References:
   - For typical conduit installation details, see sheet E-268.
   - For utility panel UP-210 schedule, see sheet E-278.
   - For types of pull boxes, splice boxes and enclosures, see sheets E-83 and E-169.
   - For conduit and cable tray schedules, see sheets starting at E-401.
   - For lighting fixture schedule, see sheet E-273.
   - For lighting installation details, see sheet E-267.
2. Electrical conduits shall enter the tower shafts between stiffeners A3 and A4 only for conduits going up or down inside the tower shafts between C1 and C2 only For conduit entry details, see Structural Utility drawings.
3. All conduits and fittings routed exposed at grating shall be rigid galvanized steel, PVC coated.
4. Fixture mounting height elevation shall be 2.125 m above floor/platform elevation UNO.
5. For other related work not shown on this sheet, see Electrical Special Provisions.
6. For Section A-A, see sheet E-285.
7. Typical conduit installation. See Detail 8, sheet E-268.
8. For wireway layout and details see sheet E-264J.

REGISTERED PROFESSIONAL ENGINEER DAVID H. OTO No. 10699 Exp. 06/30/2015 ELECTRICAL STATE OF CALIFORNIA

FOR REVISION ONLY

REQUEST FOR INFORMATION NOT ADDRESSED IN THIS CCO REMAIN IN FORCE

| MARK | DATE | DESCRIPTIONS | BY | CH'D | CCO# |
|---|---|---|---|---|---|
| 2 | 09/10/13 | CROSSBEAM & ELEV. 53 SECURITY | RR | RG | 340 |
| 1 | 01/25/12 | ELECTRICAL CHANGES FOR ELEVATION 53 IMPROVEMENTS | TW EC | RG RM | 190 |
| 0 | 12/11/09 | TOWER UTILITY PANELS | JS TW | RG FW | 70 |

REVISIONS

CONTRACT CHANGE ORDER NO. 340
SHEET 3 OF 7

# DETAILS
## TOWER AND SUSPENSION CABLE TOWER POWER AND LIGHTING

SCALE AS NOTED

E-264B

STATE OF CALIFORNIA - DEPARTMENT OF TRANSPORTATION

Caltrans

DESIGN OVERSIGHT: BEHZAD GOLEMOHAMMADI

CALCULATED/DESIGNED BY: FK — CHECKED BY: EDC

DATE 10/01 — REVISED BY: IL/QI — DATE REVISED

THIS PLAN ACCURATE FOR ELECTRICAL WORK ONLY.

ALL DIMENSIONS ARE IN MILLIMETERS UNLESS OTHERWISE SHOWN.

FOR REDUCED PLANS ORIGINAL SCALE IS IN MILLIMETERS 0 20 40 60 80

DGN FILE =>04-0120f1_0271S01R02.dgn
USERNAME =>Melsheimer

CU 04251 | EA 0120F1

LAST REVISION 09-06-13 | DATE PLOTTED => 9/10/2013 TIME PLOTTED => 2:41:39 PM

| DIST. | COUNTY | ROUTE | KILOMETER POST TOTAL PROJECT | SHEET NO. | TOTAL SHEETS |
|---|---|---|---|---|---|
| 04 | SF | 80 | 13.2/13.9 | 92052R3 | 1204 |

REGISTERED ENGINEER - CIVIL

05-07-09
PLANS APPROVAL DATE

REGISTERED PROFESSIONAL ENGINEER Marwan N. Nader No. C 054426 Exp. 12/31/13 CIVIL STATE OF CALIFORNIA

*The State of California or its officers or agents shall not be responsible for the accuracy or completeness of electronic copies of this plan sheet.*

T.Y. LIN / MOFFATT & NICHOL
825 BATTERY STREET
SAN FRANCISCO, CA 94111

*Caltrans now has a web site! To get to the web site, go to: http://www.dot.ca.gov*

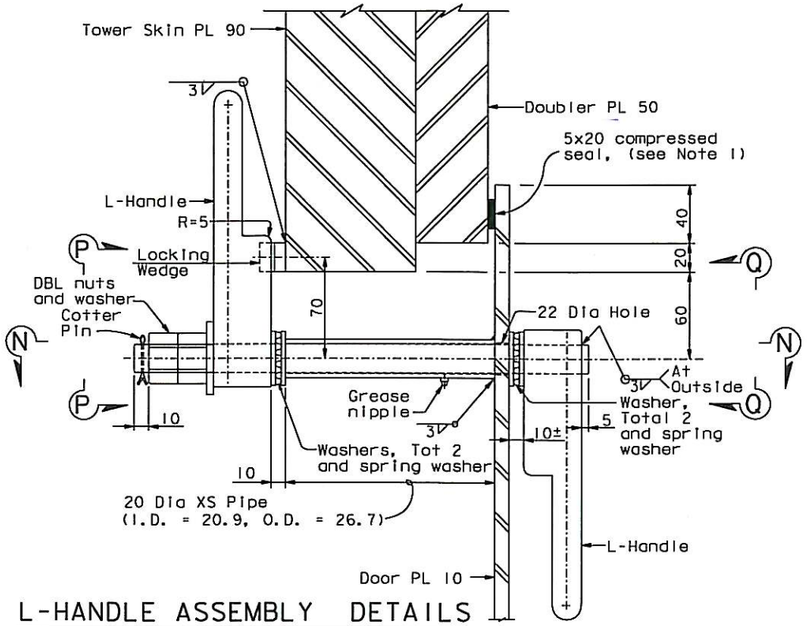


## L-HANDLE ASSEMBLY DETAILS

1:2
(For Tower Skin PL)

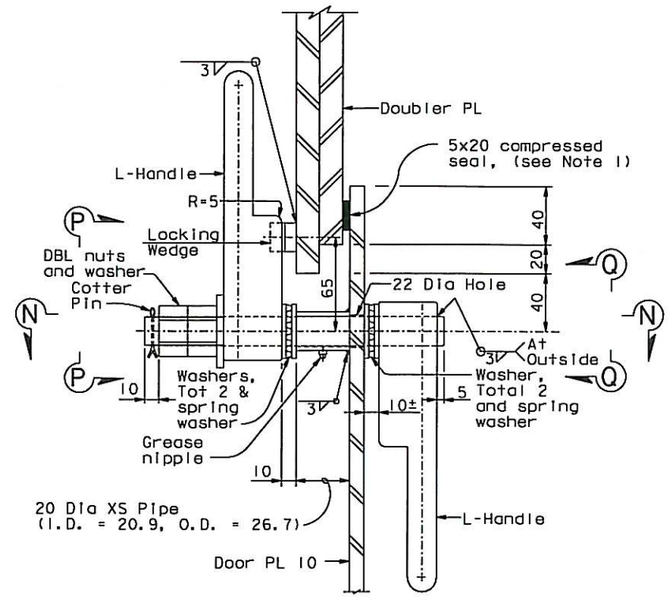


## L-HANDLE ASSEMBLY DETAILS

1:2
(Typical)

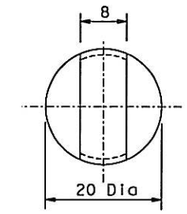


## SECTION P-P

1:4

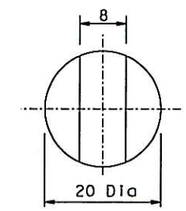


## SECTION Q-Q

1:4

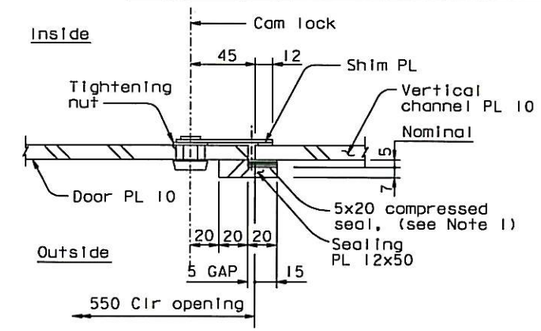


## SECTION E-E

1:2

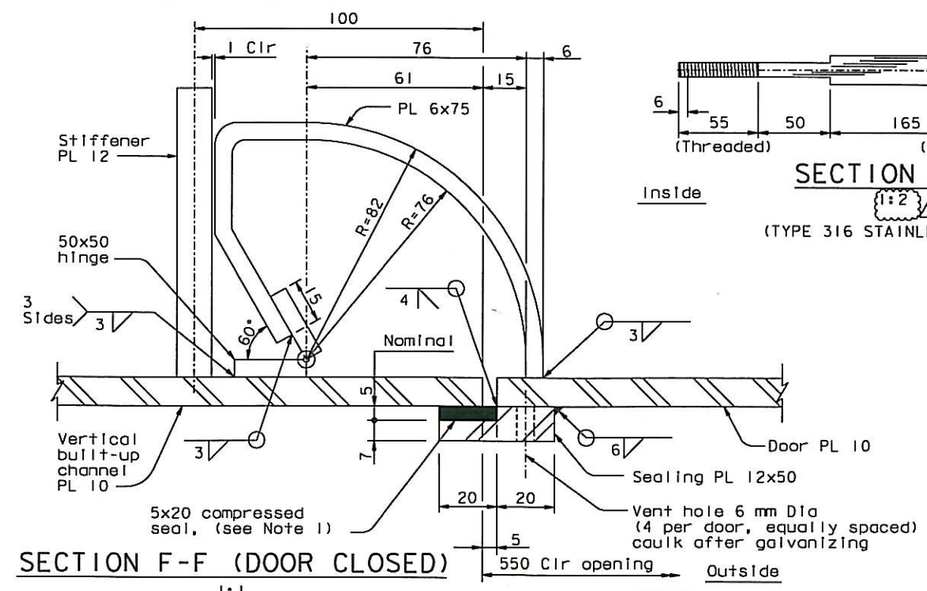


## SECTION F-F (DOOR CLOSED)

1:1

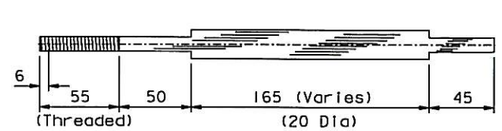


## SECTION N-N (Show shaft only)

1:2

(TYPE 316 STAINLESS STEEL ROD)

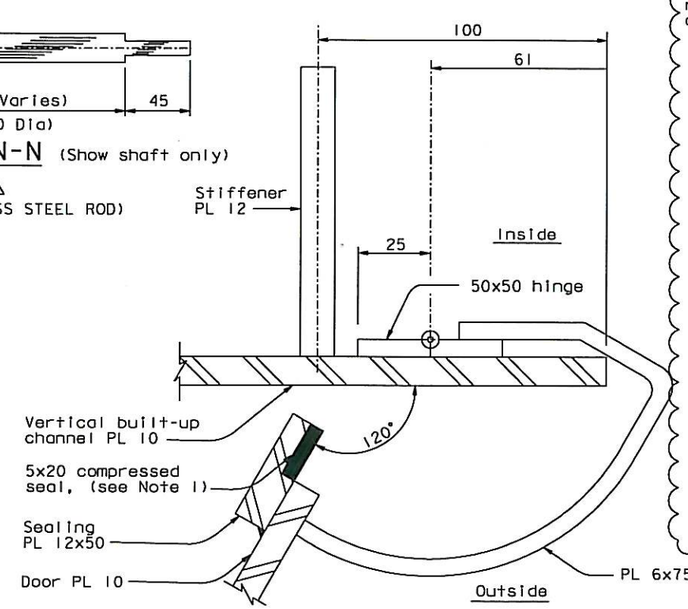


## SECTION F-F (DOOR OPEN)

1:1

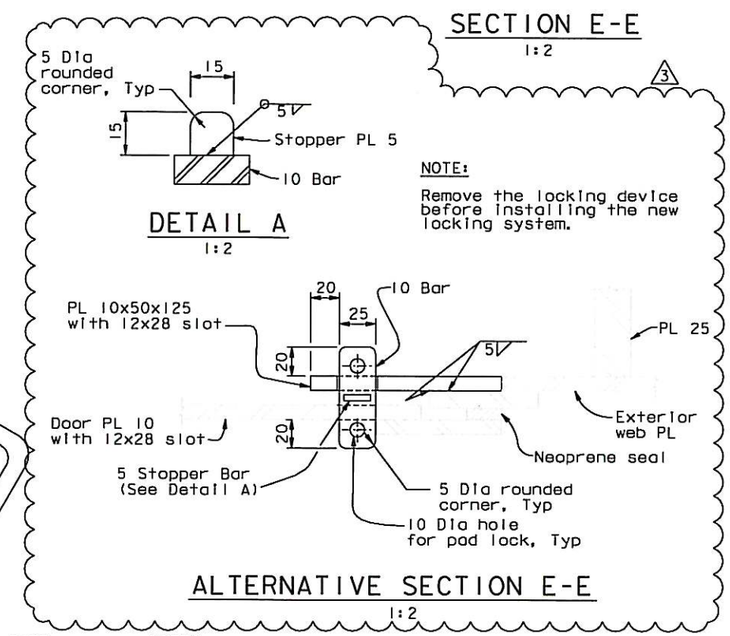


## DETAIL A

1:2

NOTE:
Remove the locking device before installing the new locking system.

## ALTERNATIVE SECTION E-E

1:2

NOTES:

1. Edges of door shall be sealed with soft urethane foam or equivalent, subject to review and approval by the Engineer. The seal material shall be UV and ozone resistant.

CONTRACT CHANGE ORDER NO. 340
SHEET 4 OF 7

*REQUESTS FOR INFORMATION NOT ADDRESSED IN THIS CCO REMAIN IN FORCE*

| MARK | DATE | DESCRIPTIONS | BY | CH'D | CCO# |
|---|---|---|---|---|---|
| 3 | 08/06/13 | CROSSBEAM AND ELEV 53 SECURITY | MN | TH | 340 |
| 2 | 01/23/13 | TOWER ACCESS DOOR | MN | CC | 286 |
| 1 | 10/29/10 | DOORS AND LADDER CAGES | MN | NV | 118 |
| 0 | 05/07/09 | DOORS AND LADDER CAGES | MN | NV | 118 |

REVISIONS

R. Valizadeh/V. Toan/Y.L./W.L./F.C.
DESIGN OVERSIGHT
Roya Valizadeh / Vang Toan / Y. Liu
SIGN OFF DATE 08/06/13

| | BY | CHECKED |
|---|---|---|
| DESIGN | M. Nader | N. Vo |
| DETAILS | M. Nader | N. Vo |
| QUANTITIES | M. Nader | N. Vo |

ALL DIMENSIONS ARE IN MILLIMETERS UNLESS OTHERWISE SHOWN

**PREPARED FOR THE STATE OF CALIFORNIA DEPARTMENT OF TRANSPORTATION**

R. Manzanarez
PROJECT ENGINEER

BRIDGE NO. 34-0006L/R
KILOMETER POST 13.2/13.9

SAN FRANCISCO OAKLAND BAY BRIDGE
EAST SPAN SEISMIC SAFETY PROJECT
SELF-ANCHORED SUSPENSION BRIDGE
(SUPERSTRUCTURE & TOWER)

# TOWER ACCESS DETAILS NO. 4B

Rev. Date: 5-18-98

ORIGINAL SCALE IN MILLIMETERS FOR REDUCED PLANS 0 10 20 30 40 50 60 70 80 90 100

CU 04
EA 0120F1

DISREGARD PRINTS BEARING EARLIER REVISION DATES

REVISION DATES (PRELIMINARY STAGE ONLY) 05/07/09

SHEET 5035 OF 2R3

FILE => L:\BB\04-012001\SAS\Contract Plans and CCO\CCO\CCO#340\1-Original 08-06-13\DGN\akacc05d.dgn

USERNAME => DWinrow DATE PLOTTED => 06 AUG 2013 TIME PLOTTED =>

100 % PS&E

| DIST. | COUNTY | ROUTE | KILOMETER POST TOTAL PROJECT | SHEET NO. | TOTAL SHEETS |
|---|---|---|---|---|---|
| 04 | SF | 80 | 13.2/13.9 | 926R7 | 1204 |

REGISTERED ENGINEER - CIVIL

12-6-04
PLANS APPROVAL DATE

REGISTERED PROFESSIONAL ENGINEER Morwan N. Nader No. C 054426 Exp. 12/31/13 CIVIL STATE OF CALIFORNIA

The State of California or its officers or agents shall not be responsible for the accuracy or completeness of electronic copies of this plan sheet.

T.Y. LIN / MOFFATT & NICHOL
825 BATTERY STREET
SAN FRANCISCO, CA 94111

Caltrans now has a web site! To get to the web site, go to: http://www.dot.ca.gov

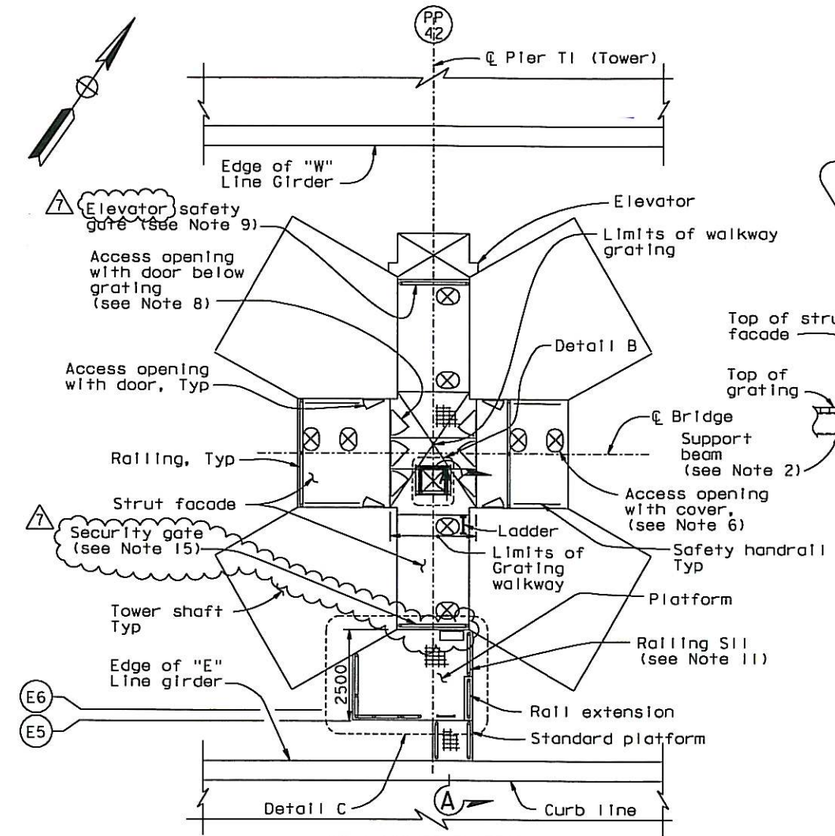


TOWER ACCESS PLATFORMS
## SECTION F-F
NTS

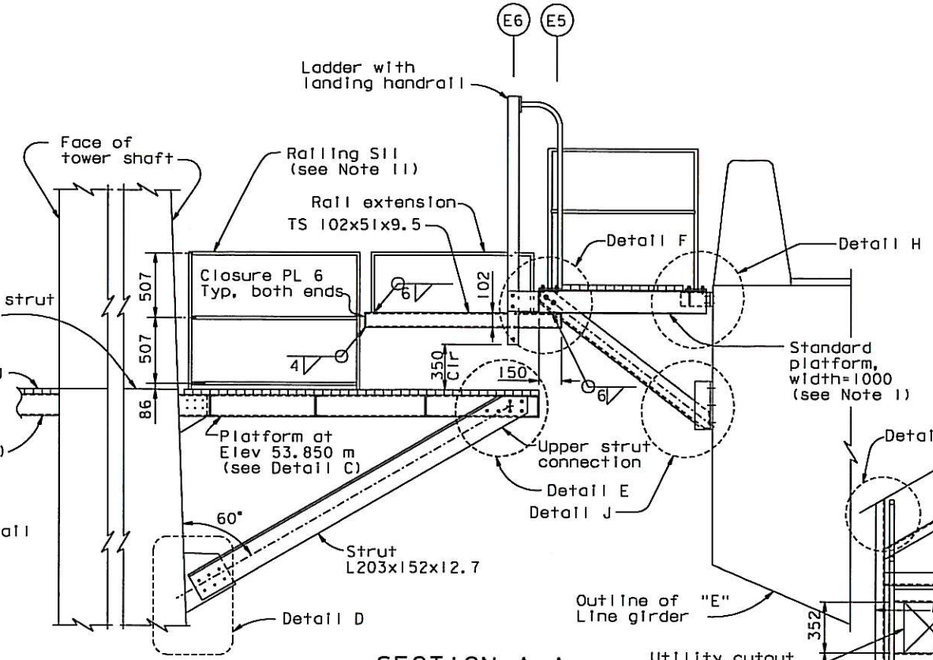


## SECTION A-A
1:20

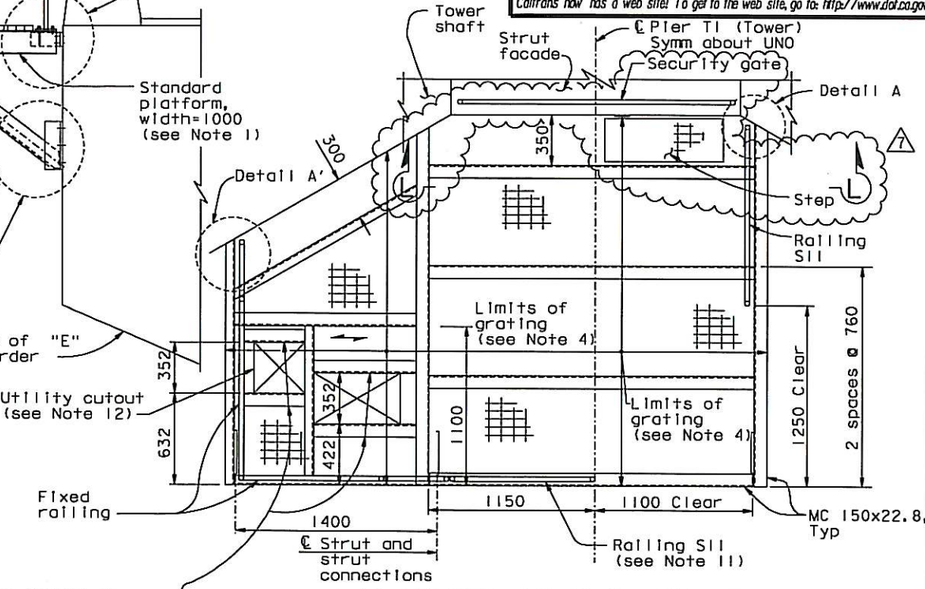


## PLATFORM AT ELEV 53.850±
## DETAIL C
1:20

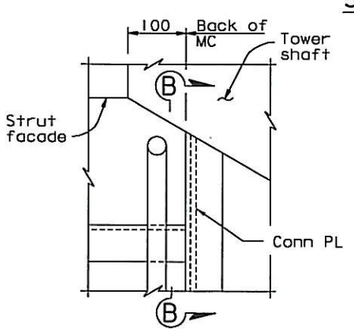


## DETAIL A
1:5
(Detail A shown, Detail A' similar)

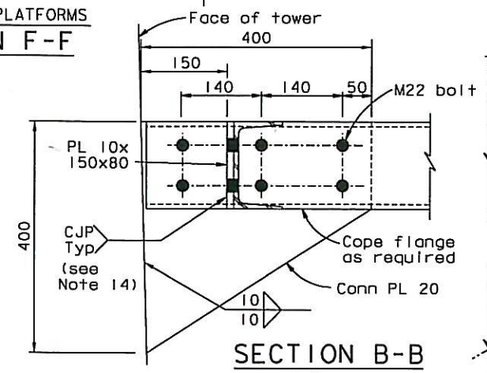


## SECTION B-B
1:5

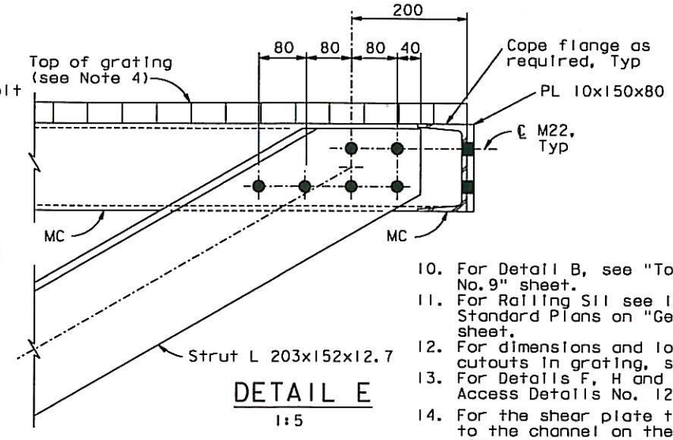


## DETAIL E
1:5

LEGEND:

(E6) Girder Working Line 6 on "E" Line.

NOTES:

1. For standard platform details, see "Tower Access Details No.9" sheet.
2. For walkway support beam details, see "Tower Access Details No.3" sheet.
3. For railing details, see "Tower Access Details No.8" sheet.
4. Grating shall be galvanized steel grating with fasteners. Grating working load shall be 14.4 kN/m².
5. For Details D, see "Tower Access Details No.11" sheet.
6. For access opening cover details, see "Tower Access Details No.9" sheet. All covers are with risers unless noted otherwise.
7. For location of Tower access opening in strut facade, see "Tower Strut Facade Details" sheets.
8. For access opening and door details, see "Tower Access Details No.4" sheet.
9. For elevator safety gate details, see "Tower Elevator Enclosure Details" sheets.
10. For Detail B, see "Tower Access Details No.9" sheet.
11. For Railing S11 see Index to Caltrans Standard Plans on "General Notes No.1" sheet.
12. For dimensions and locations of utility cutouts in grating, see "Road Plans".
13. For Details F, H and J, see "Tower Access Details No. 12" sheet.
14. For the shear plate that is connected to the channel on the front (open) side, a double-sided 6 mm fillet weld may be used. Shear plate shall be connected to channel flanges and web.
15. For security gate details, see "Tower Access Details No.36 & 37" sheets.
16. For Section L-L, see "Tower Access Details No.37" sheet.

ALL DIMENSIONS ARE IN MILLIMETERS UNLESS OTHERWISE SHOWN

CONTRACT CHANGE ORDER NO. 340
SHEET 5 OF 7

REQUESTS FOR INFORMATION NOT ADDRESSED IN THIS CCO REMAIN IN FORCE

| MARK | DATE | DESCRIPTIONS | BY | CH'D | CCO# |
|---|---|---|---|---|---|
| 7 | 09/13/13 | CROSSBEAM AND ELEV 53 SECURITY | TH | MN | 340 |
| 6 | 10/15/10 | HANDRAIL AND PLATFORMS | TH | MN | 114 |
| 5 | 09/24/10 | TOWER STRUT FACADES AND CROSS BRACING | NV | MN | 64S1 |
| 4 | 09/25/09 | HANDRAIL AND PLATFORMS | MN | TH | 114 |
| 3 | 06/12/09 | HANDRAIL | MN | TH | 114 |
| 2 | 08/15/08 | TOWER ACCESS | JD | MN | 65 |
| 1 | 09/07/07 | MECHANICAL MODIFICATIONS | JD | MN | 31 |

REVISIONS

R. Vallzadeh/V. Toon/Y.L./W.L./F.C.
DESIGN OVERSIGHT
SIGN OFF DATE 09/13/13

| | BY | CHECKED | |
|---|---|---|---|
| DESIGN | M. Nader | CHECKED | M. Gulyas |
| DETAILS | G. Baker | CHECKED | L. Rus |
| QUANTITIES | D. Turner | CHECKED | J. Leventini |

PREPARED FOR THE STATE OF CALIFORNIA DEPARTMENT OF TRANSPORTATION

R. Manzanarez
PROJECT ENGINEER

BRIDGE NO. 34-0006L/R
KILOMETER POST 13.2/13.9

SAN FRANCISCO OAKLAND BAY BRIDGE
EAST SPAN SEISMIC SAFETY PROJECT
SELF-ANCHORED SUSPENSION BRIDGE
(SUPERSTRUCTURE & TOWER)

# TOWER ACCESS DETAILS NO. 10

Rev. Date: 5-18-08

ORIGINAL SCALE IN MILLIMETERS FOR REDUCED PLANS 0 10 20 30 40 50 60 70 80 90 100

CU 04
EA 0120F1

DISREGARD PRINTS BEARING EARLIER REVISION DATES

REVISION DATES (PRELIMINARY STAGE ONLY) 05/17/99 05/28/99 05/31/01 01/08/02 07/09/02 12/19/02

SHEET 509R7 OF

FILE => I:\bb\04-012001\sas\contract plans and cco\cco\cco#340\5-update 09-13-13\dgn\akcc09.dgn

100 % PS&E

USERNAME => DMinrow DATE PLOTTED => 13 SEP 2013 TIME PLOTTED => 13:29:20

| DIST. | COUNTY | ROUTE | KILOMETER POST TOTAL PROJECT | SHEET NO. | TOTAL SHEETS |
|---|---|---|---|---|---|
| 04 | SF | 80 | 13.2/13.9 | 938S14 | 1204 |

REGISTERED ENGINEER - CIVIL

09-13-13
PLANS APPROVAL DATE

*The State of California or its officers or agents shall not be responsible for the accuracy or completeness of electronic copies of this plan sheet.*

REGISTERED PROFESSIONAL ENGINEER — Tien Hung Ho, No. C 43990, Exp. 06/30/15, CIVIL, STATE OF CALIFORNIA

T.Y. LIN / MOFFATT & NICHOL
825 BATTERY STREET
SAN FRANCISCO, CA 94111

*Caltrans now has a web site! To get to the web site, go to: http://www.dot.ca.gov*

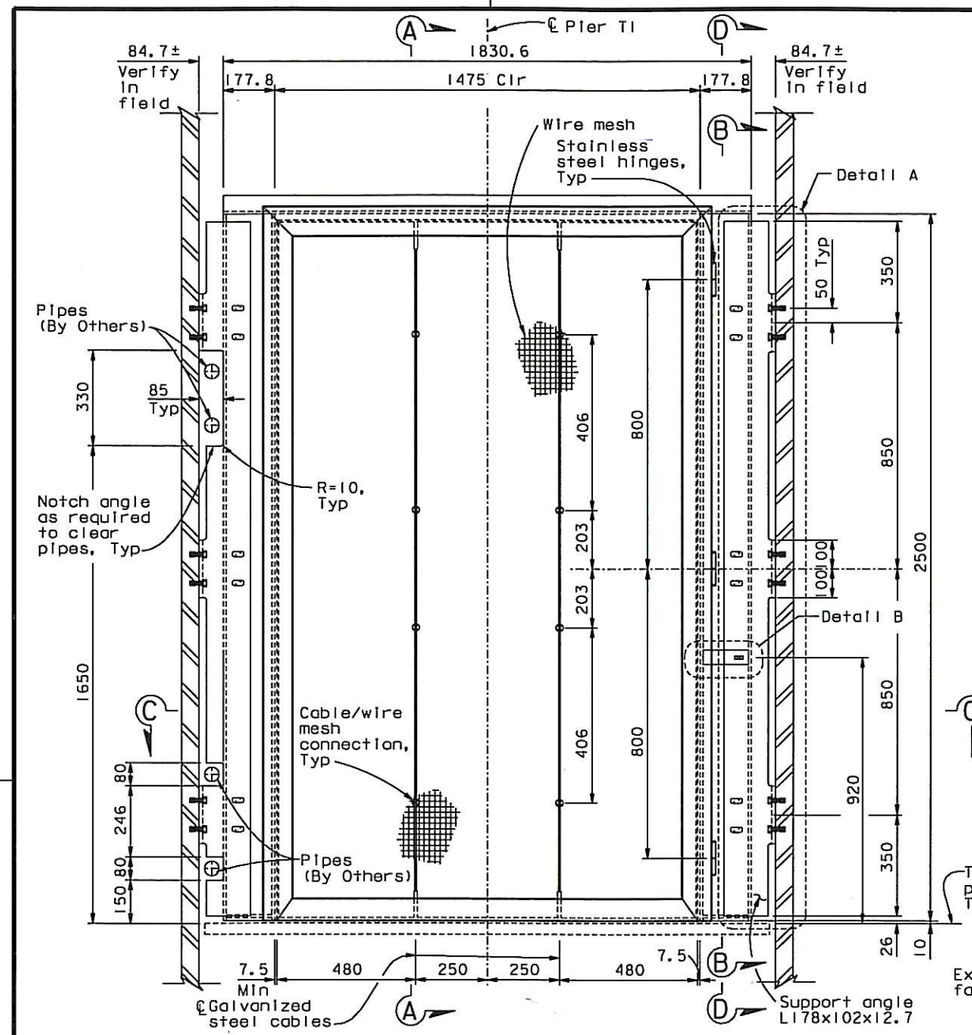


SECURITY GATE AT ELEV 53.850 M
1:10
(Looking North From Platform)

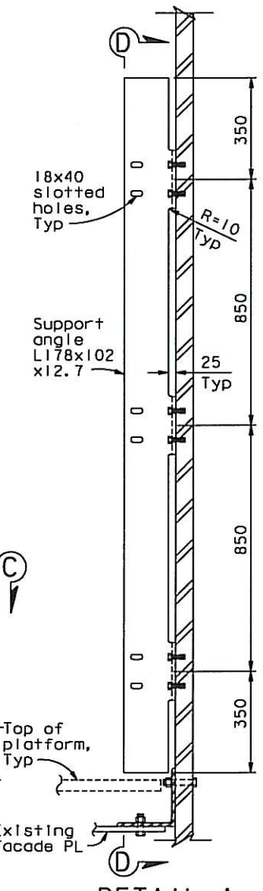


DETAIL A
1:10

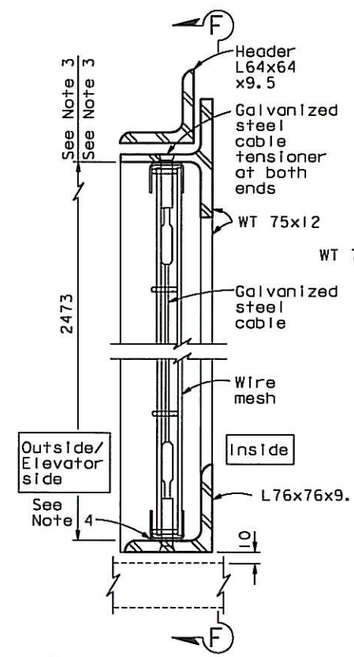


SECTION A-A
1:2.5

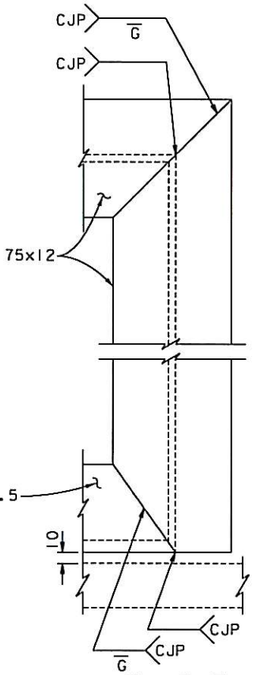


VIEW F-F
1:2.5
(Header not shown for clarity)

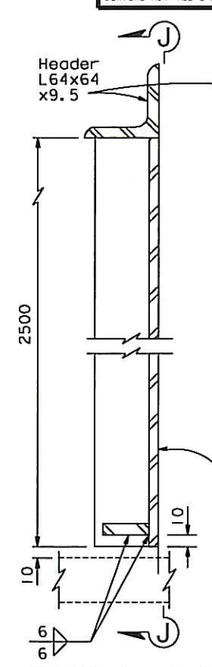


SECTION B-B
1:2.5

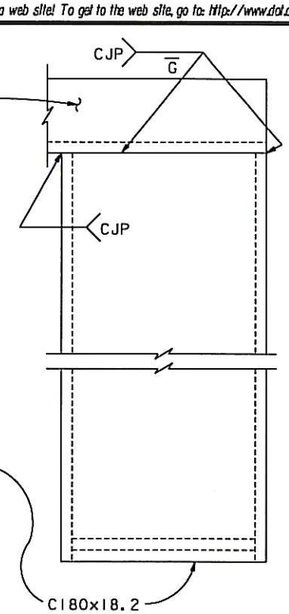


VIEW J-J
1:2.5
(Support angle not shown for clarity)

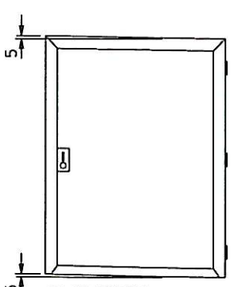


CAMBER (See Note 1)
NTS

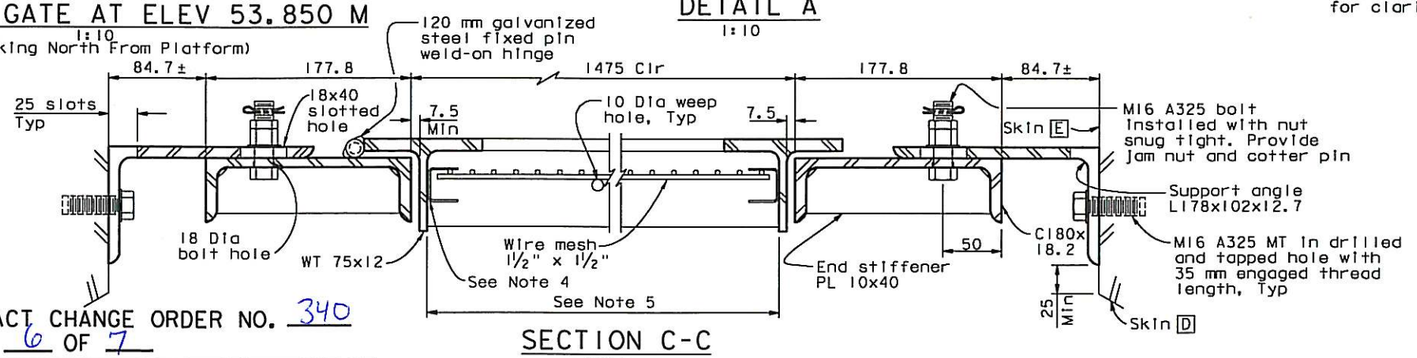


SECTION C-C
1:2.5

NOTES:

1. Provide 5 mm camber to account for self weight deflection of safety gate.
2. For Section D-D & Detail B, see "Tower Access Details No. 37" sheet.
3. Vertical height of steel frames shall be adjusted to receive the wire mesh with U-band frame at top and bottom.
4. Welding of wire mesh U-band frame to steel frame shall be in accordance with wire mesh manufacturer's recommendations.
5. Width of steel frames shall be adjusted to receive the wire mesh with U-band frame.

CONTRACT CHANGE ORDER NO. 340
SHEET 6 OF 7

*REQUESTS FOR INFORMATION NOT ADDRESSED IN THIS CCO REMAIN IN FORCE*

ALL DIMENSIONS ARE IN MILLIMETERS UNLESS OTHERWISE SHOWN

A. Akinsanya / W. Long
DESIGN OVERSIGHT
SIGN OFF DATE 09/13/13

| MARK | DATE | DESCRIPTIONS | BY | CH'D | CCO# |
|---|---|---|---|---|---|
| 0 | 09/13/13 | CROSSBEAM AND ELEV 53 SECURITY | TH | MN | 340 |

REVISIONS

| | BY | CHECKED |
|---|---|---|
| DESIGN | T. Ho | M. Nader |
| DETAILS | T. Ho | A. Baumberger |
| QUANTITIES | T. Ho | A. Baumberger |

**PREPARED FOR THE STATE OF CALIFORNIA DEPARTMENT OF TRANSPORTATION**

M. Nader
PROJECT ENGINEER

BRIDGE NO. 34-0006L/R
KILOMETER POST 13.2/13.9

SAN FRANCISCO OAKLAND BAY BRIDGE
EAST SPAN SEISMIC SAFETY PROJECT
SELF-ANCHORED SUSPENSION BRIDGE
(SUPERSTRUCTURE & TOWER)

# TOWER ACCESS DETAILS NO. 36

Rev. Date: 5-18-98

ORIGINAL SCALE IN MILLIMETERS FOR REDUCED PLANS 0 10 20 30 40 50 60 70 80 90 100

CU 04
EA 0120F1

DISREGARD PRINTS BEARING EARLIER REVISION DATES 09/13/13

REVISION DATES (PRELIMINARY STAGE ONLY)

SHEET 521S14 OF

FILE => I:\bb\04-012001\sas\contract plans and cco\cco\cco#340\5-update 09-13-13\dgn\akacc22a.dgn

USERNAME => DWinrow DATE PLOTTED => 13 SEP 2013 TIME PLOTTED => 13:28:18

100% PS&E

| DIST. | COUNTY | ROUTE | KILOMETER POST TOTAL PROJECT | SHEET NO. | TOTAL SHEETS |
|---|---|---|---|---|---|
| 04 | SF | 80 | 13.2/13.9 | 938515 | 1204 |

REGISTERED ENGINEER - CIVIL

09-19-13

PLANS APPROVAL DATE

REGISTERED PROFESSIONAL ENGINEER Tien Hung Ho No. C 43990 Exp. 06/30/15 CIVIL STATE OF CALIFORNIA

*The State of California or its officers or agents shall not be responsible for the accuracy or completeness of electronic copies of this plan sheet.*

T.Y. LIN / MOFFATT & NICHOL
825 BATTERY STREET
SAN FRANCISCO, CA 94111

*Caltrans now has a web site! To get to the web site, go to: http://www.dot.ca.gov*

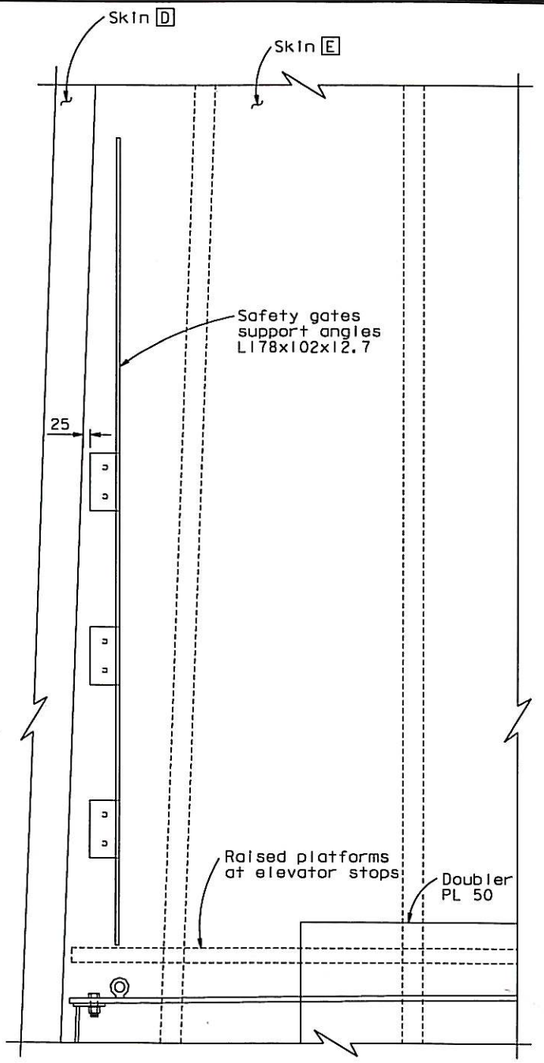


SECTION D-D (West shaft shown, West shaft similar & opposite handed)
1:10

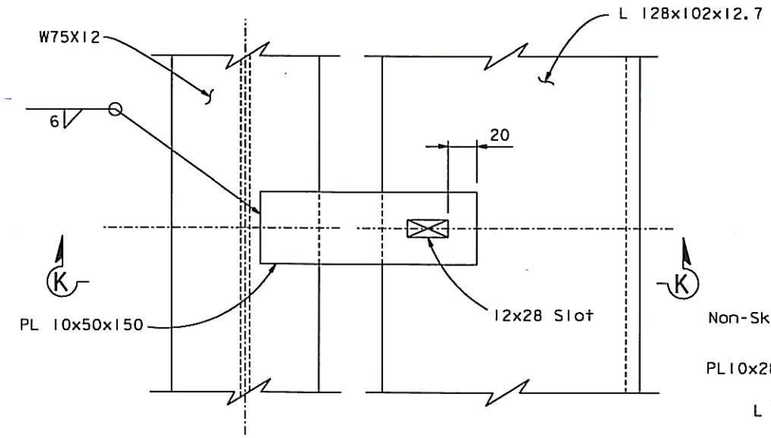


DETAIL B
1:2

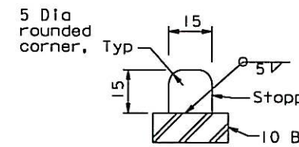


DETAIL C
1:2

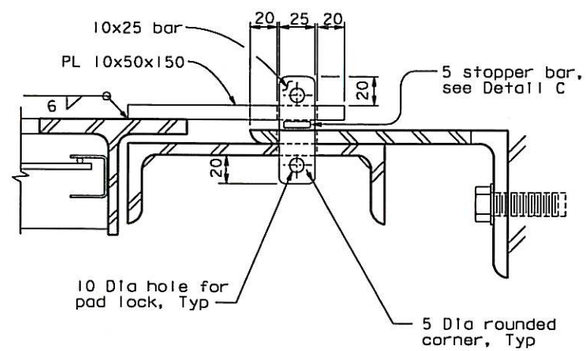


SECTION K-K
1:2

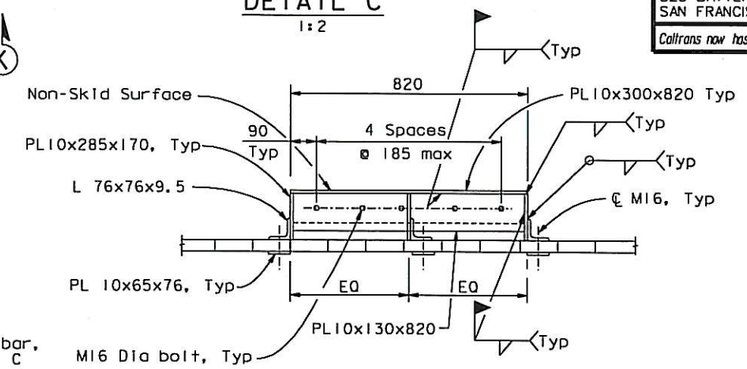


STEP DETAIL
1:10

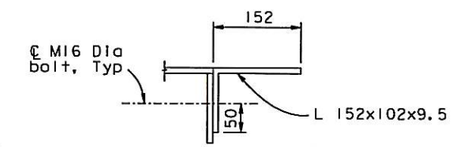


DETAIL E
1:5

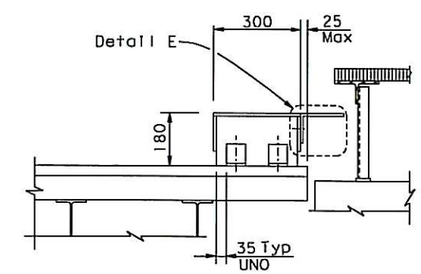


SECTION M-M (Standard railing not shown for clarity)
1:10

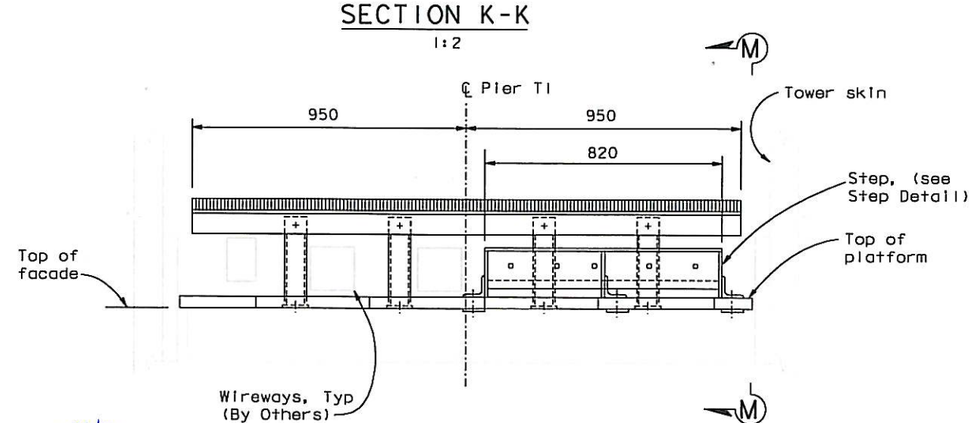


SECTION L-L
1:10

NOTES:

1. Dimension may be adjusted to clear splice bolts, pad eyes and other interferences.

CONTRACT CHANGE ORDER NO. 340
SHEET 7 OF 7

*REQUESTS FOR INFORMATION NOT ADDRESSED IN THIS CCO REMAIN IN FORCE*

ALL DIMENSIONS ARE IN MILLIMETERS UNLESS OTHERWISE SHOWN

| MARK | DATE | DESCRIPTIONS | BY | CH'D | CCO# |
|---|---|---|---|---|---|
| 0 | 09/19/13 | CROSSBEAM AND ELEV 53 SECURITY | TH | MN | 340 |

REVISIONS

DESIGN OVERSIGHT: A. Akinsanya / W. Long
SIGN OFF DATE 09/19/13

DESIGN BY T. Ho CHECKED M. Nadder
DETAILS BY T. Ho CHECKED A. Baumberger
QUANTITIES BY T. Ho CHECKED A. Baumberger

PREPARED FOR THE STATE OF CALIFORNIA DEPARTMENT OF TRANSPORTATION

M. Nader
PROJECT ENGINEER

BRIDGE NO. 34-0006L/R
KILOMETER POST 13.2/13.9

SAN FRANCISCO OAKLAND BAY BRIDGE
EAST SPAN SEISMIC SAFETY PROJECT
SELF-ANCHORED SUSPENSION BRIDGE
(SUPERSTRUCTURE & TOWER)

# TOWER ACCESS DETAILS NO. 37

Rev. Date: 5-18-98

ORIGINAL SCALE IN MILLIMETERS FOR REDUCED PLANS 0 10 20 30 40 50 60 70 80 90 100

CU 04
EA 0120F1

DISREGARD PRINTS BEARING EARLIER REVISION DATES

REVISION DATES (PRELIMINARY STAGE ONLY) 09/19/13

SHEET 521515 OF

FILE => L:\BB\04-012001\SAS\Contract Plans and CCO\CCO\CCO#340\6-Update 09-19-13\DGN\okacc22r.dgn

100 % PS&E

USERNAME => DWinrow DATE PLOTTED => 19 SEP 2013 TIME PLOTTED => 10:03:43