DIST	COUNTY	ROUTE	KILOMETER POST TOTAL PROJECT	SHEET No	TOTAL SHEETS
04	SF	80	13.2/13.9	46R9	1204

Bobby J. Melvin 11/25/2009
REGISTERED MECHANICAL ENGINEER DATE

PLANS APPROVAL DATE

PARSONS BRINCKERHOFF QUADE & DOUGLAS, INC.
303 SECOND STREET, SUITE 700 N
SAN FRANCISCO, CA 94107

The State of California or its officers or agents shall not be responsible for the accuracy or completeness of electronic copies of this plan sheet.

Caltrans now has a web site! To get to the web site, go to http://www.dot.ca.gov

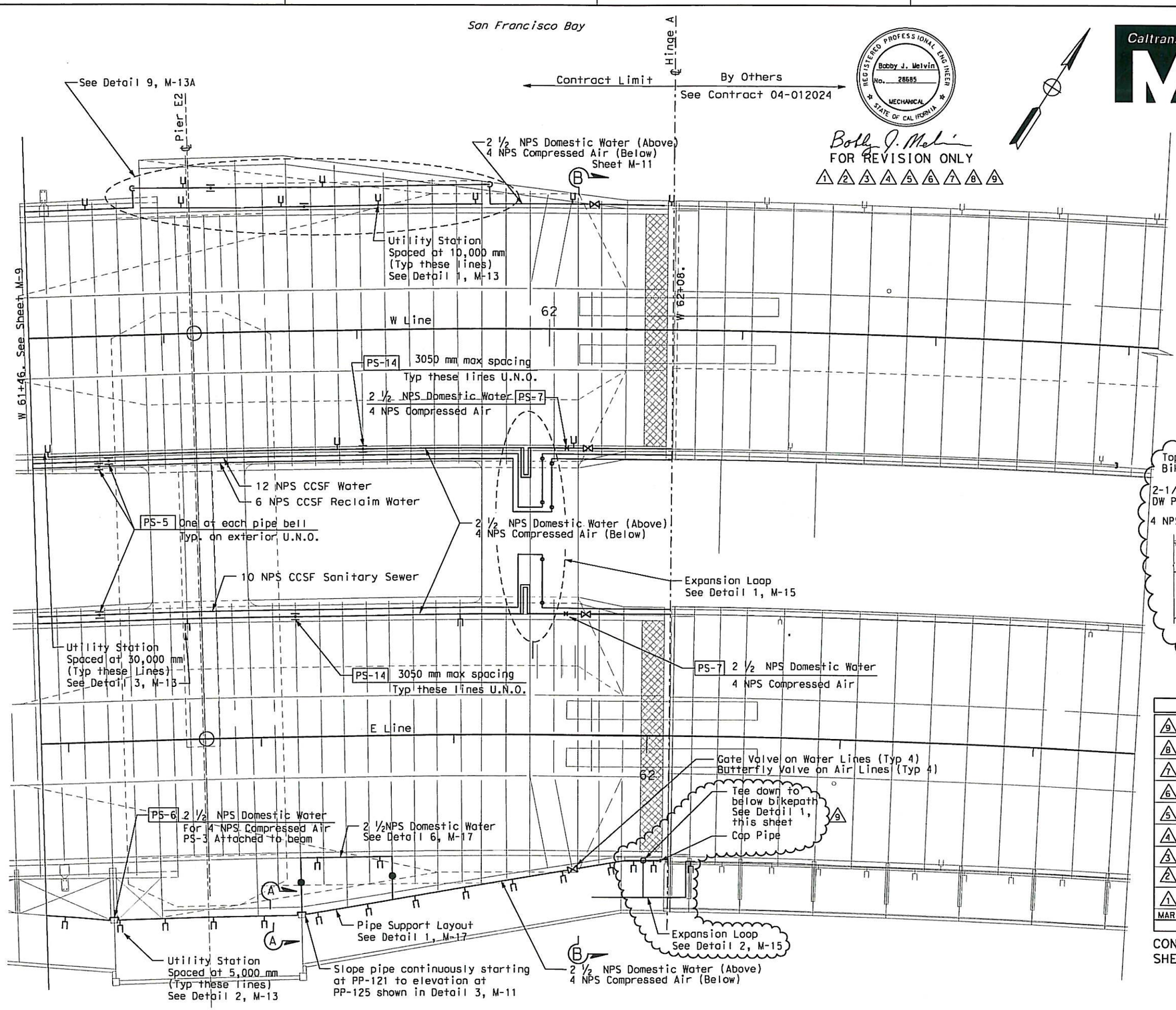

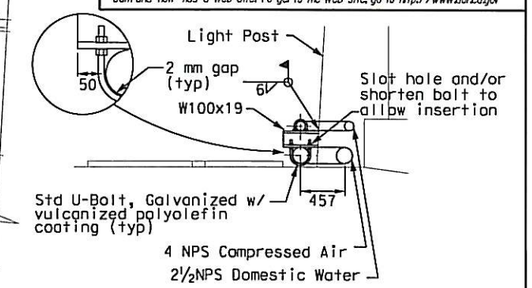

SECTION A-A

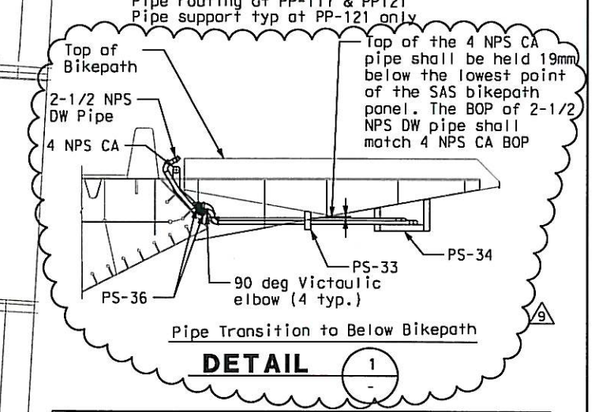

DETAIL 1

REQUEST FOR INFORMATION NOT ADDRESSED IN THIS CCO REMAIN IN FORCE					
9	11/08/13	MECHANICAL INTERFERENCE MODIFICATIONS	MM	BM	339
8	4/23/13	BIKEPATH MEP	AM	BM	266
7	9/28/12	BIKEPATH MEP	MM	BM	266
6	8/20/10	MISCELLANEOUS MECHANICAL	CH	BM	83
5	6/25/10	MISCELLANEOUS MECHANICAL	CH	BM	83
4	11/18/09	MISCELLANEOUS MECHANICAL	CH	BM	83
3	8/12/08	MECHANICAL MODIFICATIONS	VY	BM	31
2	1/18/08	MECHANICAL MODIFICATIONS	VY	BM	31
1	9/05/07	MECHANICAL MODIFICATIONS	BM	RM	31
MARK	DATE	DESCRIPTIONS	BY	CH'D	CCO#
		REVISIONS			

CONTRACT CHANGE ORDER NO. 339
SHEET 3 OF 7

MAIN SPAN STRUCTURE PIPING PLAN

SCALE: 1:200

M-10

DATE	BM	CALCULATED/ DESIGNED BY	PROJECT ENGINEER
10/31/02	KH	CHECKED BY	Rich Newell

REVISED BY — DATE REVISED

STATE OF CALIFORNIA - DEPARTMENT OF TRANSPORTATION

Caltrans

ALL DIMENSIONS IN MILIMETERS UNLESS OTHERWISE SHOWN

FOR REDUCED PLANS ORIGINAL SCALE IS IN MILLIMETERS 0 20 40 60 80

USERNAME => Llorico
DGN FILE => 04-0120F1_0046R09.dgn

CU 04251

EA 0120F1

LAST REVISION 00-00-00 — DATE PLOTTED => 11/8/2013 TIME PLOTTED => 10:04:25 AM

DIST	COUNTY	ROUTE	KILOMETER POST TOTAL PROJECT	SHEET No	TOTAL SHEETS
04	SF	80	13.2/13.9	49R2	1204

REGISTERED MECHANICAL ENGINEER — DATE 12/19/2002

12-6-04
PLANS APPROVAL DATE

REGISTERED PROFESSIONAL ENGINEER — Bobby J. Melvin — No. 28685 — Exp. 6/30/05 — MECHANICAL — STATE OF CALIFORNIA

PARSONS BRINCKERHOFF QUADE & DOUGLAS, INC.
303 SECOND STREET, SUITE 700 N
SAN FRANCISCO, CA 94107

The State of California or its officers or agents shall not be responsible for the accuracy or completeness of electronic copies of this plan sheet.

Caltrans now has a web site! To get to the web site, go to http://www.dot.ca.gov

Caltrans Metric

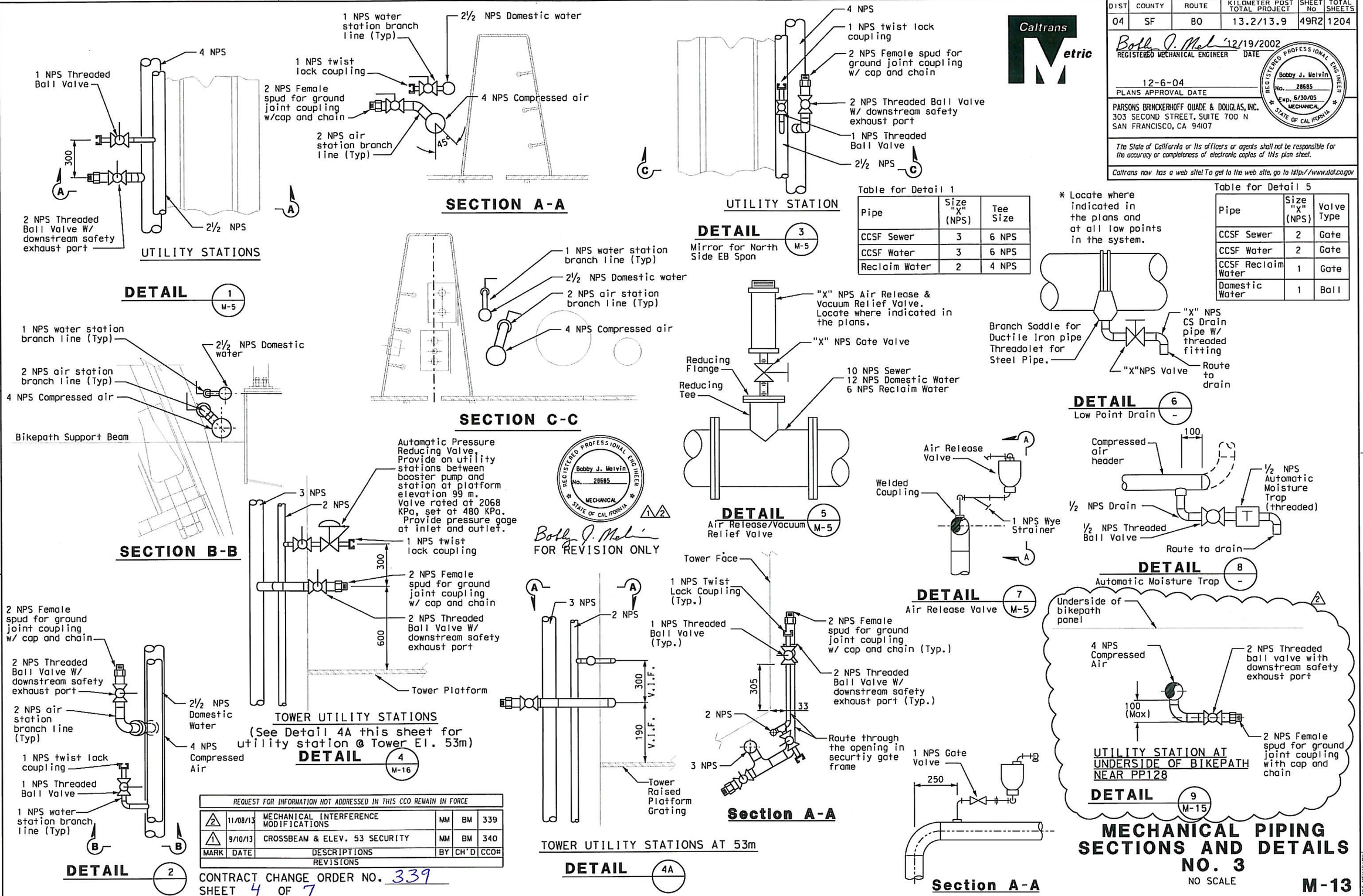

Pipe	Size "X" (NPS)	Tee Size
CCSF Sewer	3	6 NPS
CCSF Water	3	6 NPS
Reclaim Water	2	4 NPS

Pipe	Size "X" (NPS)	Valve Type
CCSF Sewer	2	Gate
CCSF Water	2	Gate
CCSF Reclaim Water	1	Gate
Domestic Water	1	Ball

MARK	DATE	DESCRIPTIONS	BY	CH'D	CCO#
2	11/08/13	MECHANICAL INTERFERENCE MODIFICATIONS	NM	BM	339
1	9/10/13	CROSSBEAM & ELEV. 53 SECURITY	NM	BM	340

REQUEST FOR INFORMATION NOT ADDRESSED IN THIS CCO REMAIN IN FORCE

REVISIONS

CONTRACT CHANGE ORDER NO. 339
SHEET 4 OF 7

ALL DIMENSIONS IN MILLIMETERS UNLESS OTHERWISE SHOWN

MECHANICAL PIPING SECTIONS AND DETAILS NO. 3

NO SCALE

M-13

DATE	REVISED BY	DATE	REVISED
10/31/02	BM	11/15/02	KH

CALCULATED/DESIGNED BY — CHECKED BY

PROJECT ENGINEER: Rich Newell

STATE OF CALIFORNIA - DEPARTMENT OF TRANSPORTATION — Caltrans

LAST REVISION 00-00-00 — DATE PLOTTED => 11/8/2013 — TIME PLOTTED => 10:05:08 AM

FOR REDUCED PLANS ORIGINAL SCALE IS IN MILLIMETERS 0 20 40 60 80

USERNAME => Llorico
DGN FILE => 04-0120F1_0049R02.dgn

CU 04251 — EA 0120F1

DIST	COUNTY	ROUTE	KILOMETER POST TOTAL PROJECT	SHEET No	TOTAL SHEETS
04	SF	80	13.2/13.9	51R6	1204

Bobby J. Melvin 12/19/2002
REGISTERED MECHANICAL ENGINEER DATE

PLANS APPROVAL DATE

REGISTERED PROFESSIONAL ENGINEER Bobby J. Melvin No. 28685 Exp. 6/30/11 MECHANICAL STATE OF CALIFORNIA

PARSONS BRINCKERHOFF QUADE & DOUGLAS, INC.
303 SECOND STREET, SUITE 700 N
SAN FRANCISCO, CA 94107

The State of California or its officers or agents shall not be responsible for the accuracy or completeness of electronic copies of this plan sheet.

To get to the web site, go to http://www.dot.ca.gov

Caltrans Metric

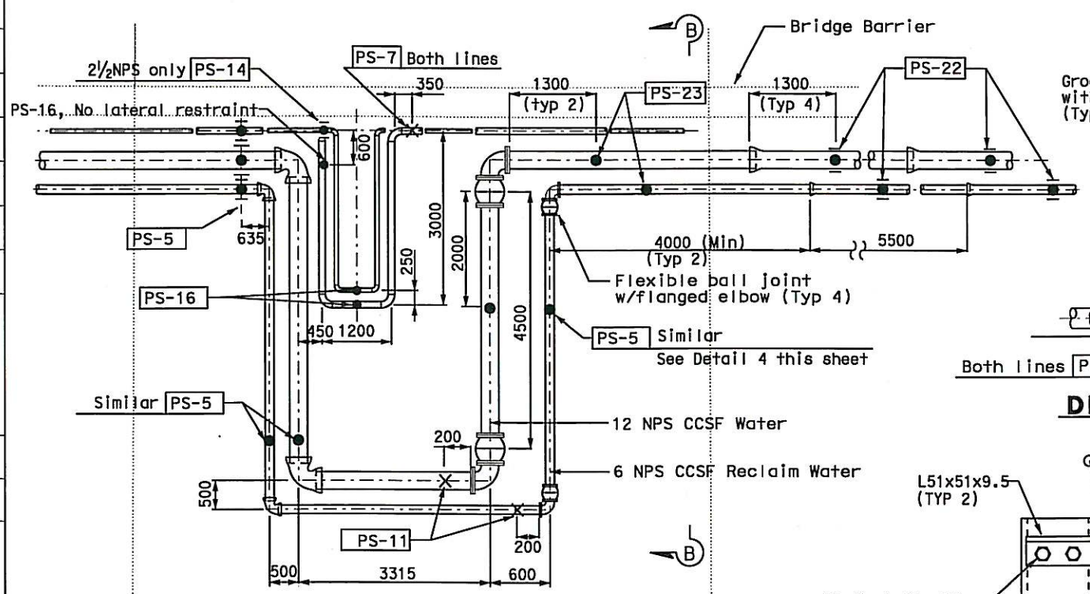

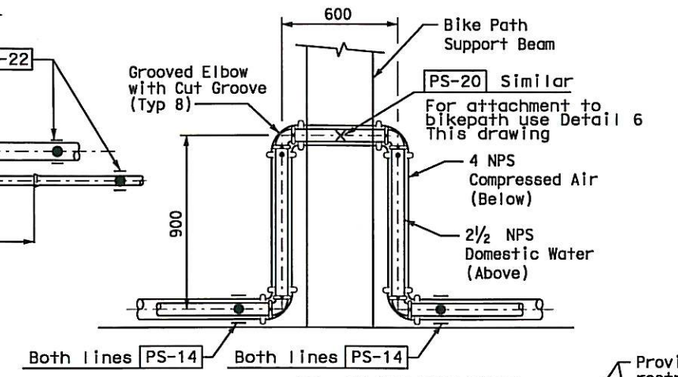

DETAIL 3 / -

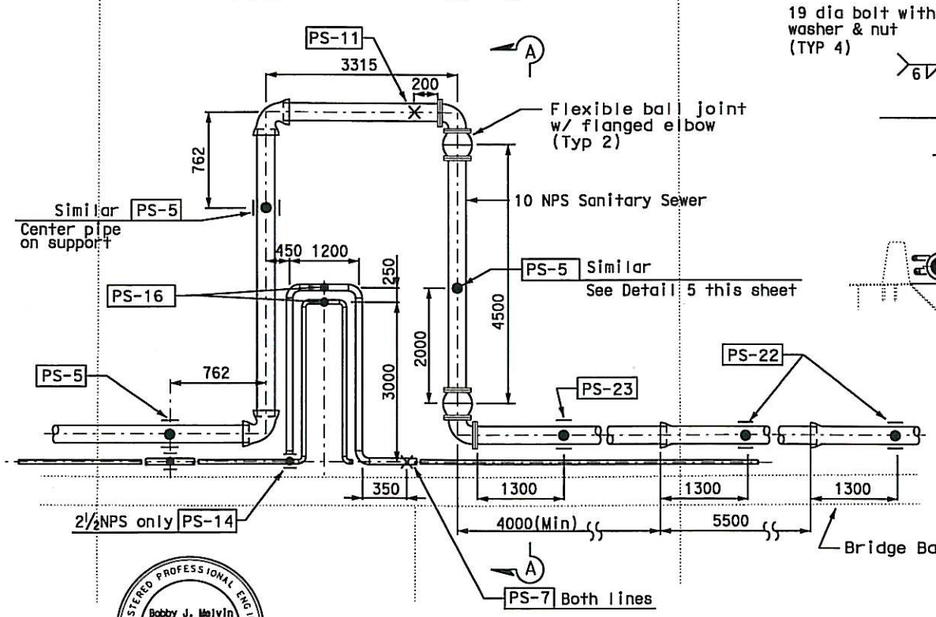

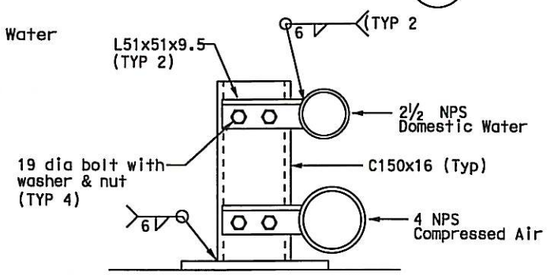

DETAIL 6 / -

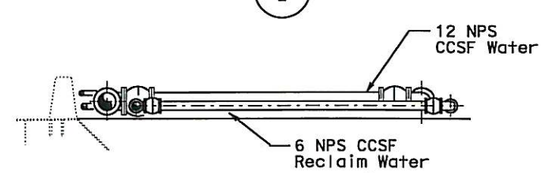

SECTION B-B

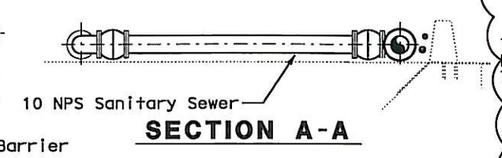

SECTION A-A

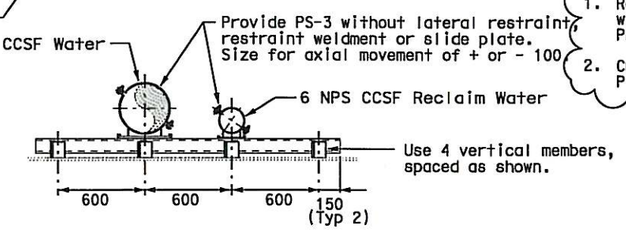

DETAIL 4 / -

NOTES:
1. Rotate elbow as required to align with existing Skyway Piping. Provide welded joints.
2. Cut and remove existing Skyway Piping back to new connection point.

6

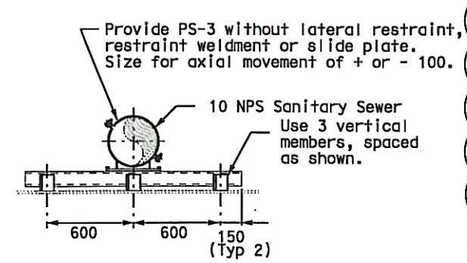

DETAIL 5 / -

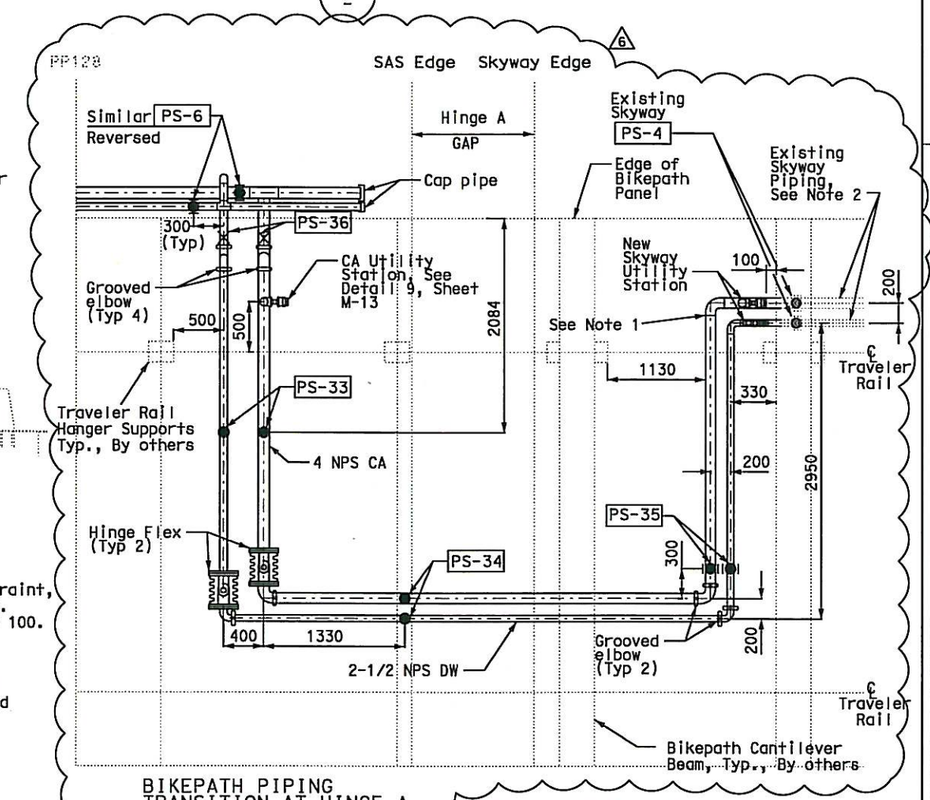

BIKEPATH PIPING TRANSITION AT HINGE A

DETAIL 2 / -

Bobby J. Melvin
FOR REVISION ONLY
1 2 3 4 5 6

EXPANSION JOINTS FOR HINGE A

DETAIL 1 / M-10

REQUEST FOR INFORMATION NOT ADDRESSED IN THIS CCO REMAIN IN FORCE					
6	11/08/13	MECHANICAL INTERFERENCE MODIFICATIONS	MM	BM	339
5	6/25/10	MISCELLANEOUS MECHANICAL	CH	BM	83
4	4/23/10	MISCELLANEOUS MECHANICAL	CH	BM	83
3	2/11/09	MISCELLANEOUS MECHANICAL	CM	BM	83
2	1/18/08	MECHANICAL MODIFICATIONS	VY	BM	31
1	9/05/07	MECHANICAL MODIFICATIONS	BM	RM	31
MARK	DATE	DESCRIPTIONS	BY	CH'D	CCO#
		REVISIONS			

CONTRACT CHANGE ORDER NO. 339
SHEET 5 OF 7

ALL DIMENSIONS IN MILLIMETERS UNLESS OTHERWISE SHOWN

MECHANICAL PIPING SECTIONS AND DETAILS NO. 5

NO SCALE

M-15

DATE	BM	CALCULATED/ DESIGNED BY	PROJECT ENGINEER
10/31/02	KH	CHECKED BY	Rich Newell

DATE	REVISED BY
11/15/02	DATE REVISED

STATE OF CALIFORNIA - DEPARTMENT OF TRANSPORTATION

Caltrans

FOR REDUCED PLANS ORIGINAL SCALE IS IN MILLIMETERS 0 20 40 60 80

DGN FILE => 04-0120f1_0051R06.dgn
USERNAME => Llorico

CU 04251

EA 0120F1

LAST REVISION 00-00-00

DATE PLOTTED => 07-JAN-2014
TIME PLOTTED => 10:31

DIST	COUNTY	ROUTE	KILOMETER POST TOTAL PROJECT	SHEET No	TOTAL SHEETS
04	SF	80	12.2 / 14.3	57 S1R2	1204

Bobby J. Melvin 4-27-12
REGISTERED MECHANICAL ENGINEER DATE

PLANS APPROVAL DATE

REGISTERED PROFESSIONAL ENGINEER Bobby J. Melvin No. 28685 MECHANICAL STATE OF CALIFORNIA

PARSONS BRINCKERHOFF QUADE & DOUGLAS, INC.
303 Second St., Suite 700N
San Francisco, CA 94107-1317

The State of California or its officers or agents shall not be responsible for the accuracy or completeness of electronic copies of this plan sheet.

Caltrans now has a web site! To get to the web site, go to: http://www.dot.ca.gov

Caltrans Metric

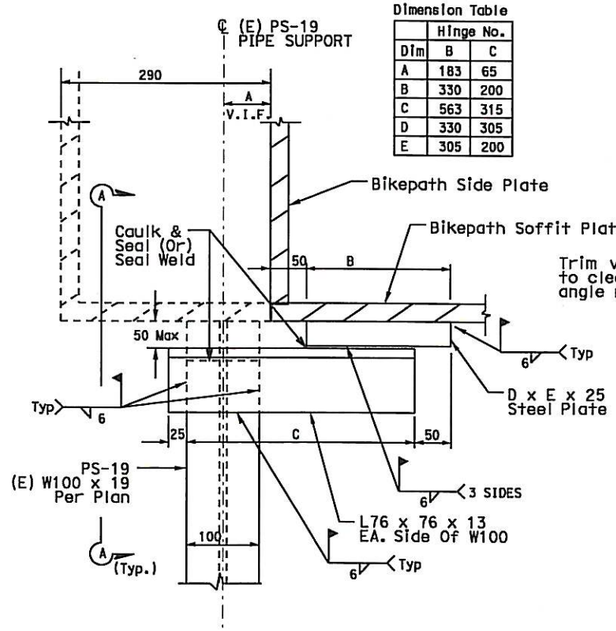

Dimension Table

	Hinge No.	
Dim	B	C
A	183	65
B	330	200
C	563	315
D	330	305
E	305	200

MODIFICATION TO PIPE SUPPORT PS-19 AT HINGE B & C

See Note 1

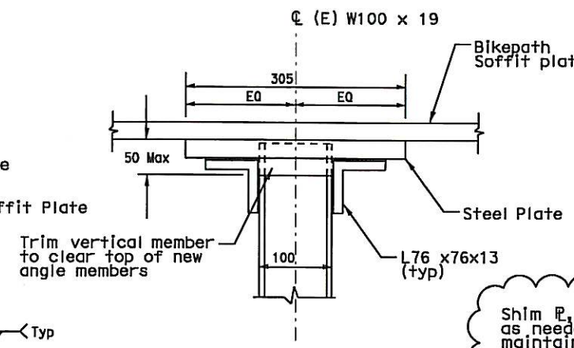

SECTION A-A DETAIL

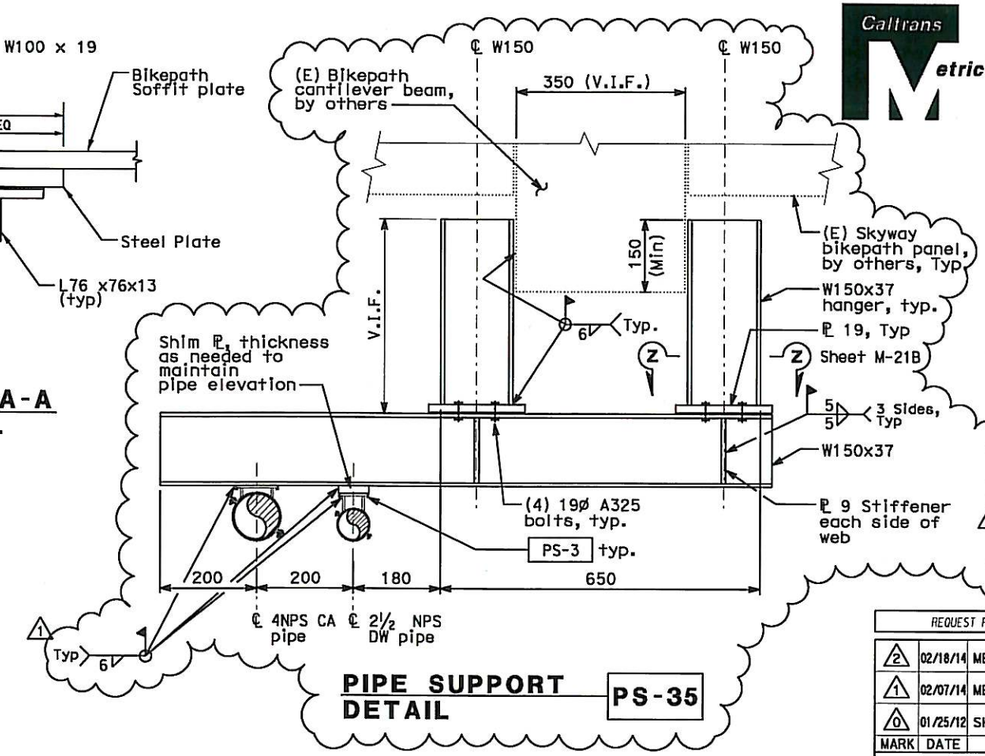

PIPE SUPPORT DETAIL PS-35

NOTES:

1. Detail is modifications to attachment of Skyway pipe support PS-19 located at hinges indicated. Refer to contract 012024 for details of standard pipe support and piping configuration.
2. Contractor shall verify all dimensions in field.
3. △2
4. All welding shall be in accordance with Special Provisions.

REQUEST FOR INFORMATION NOT ADDRESSED IN THIS CCO REMAIN IN FORCE

MARK	DATE	DESCRIPTIONS	BY	CH'D	CCO#
△2	02/18/14	MECHANICAL INTERFERENCE MODIFICATIONS	AM	BM	339
△1	02/07/14	MECHANICAL INTERFERENCE MODIFICATIONS	AM	BM	339
△0	01/25/12	SKYWAY BIKEPATH JOINT COVER PLATES	AM	BM	217S1

REVISIONS

CONTRACT CHANGE ORDER NO. 339
SHEET 6 OF 7

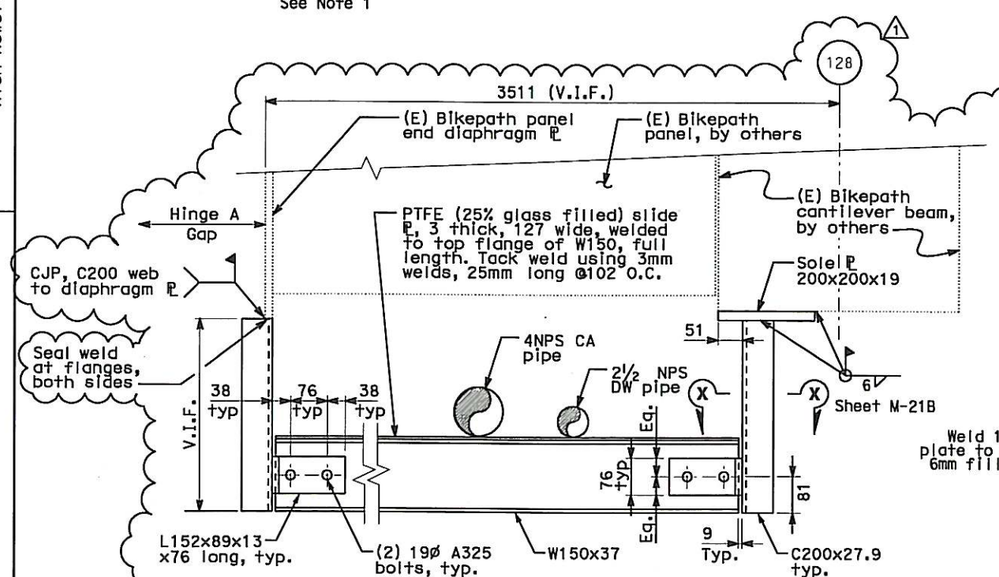

PIPE SUPPORT DETAIL PS-33

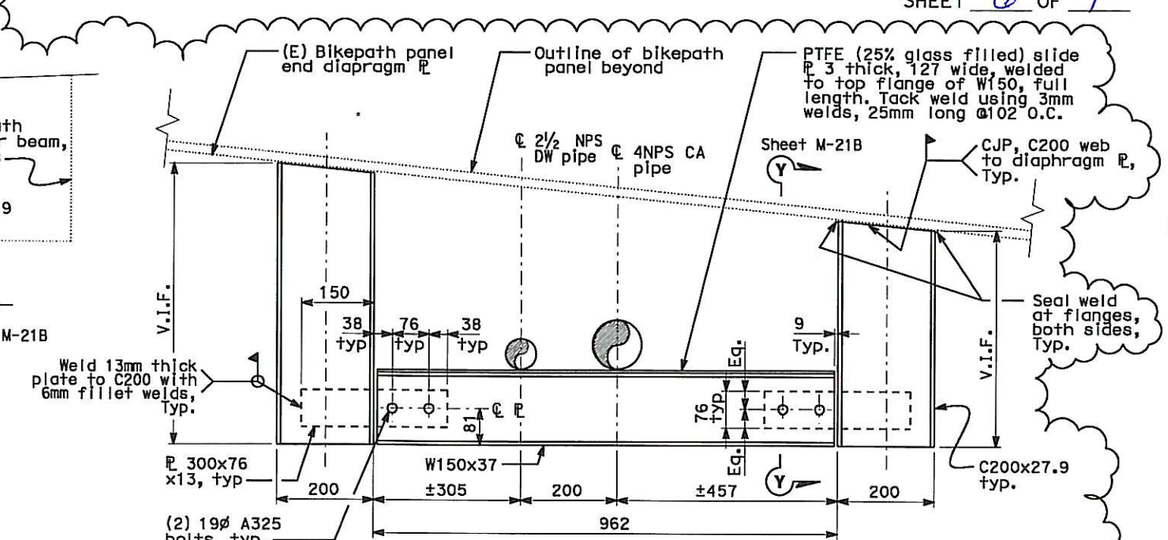

PIPE SUPPORT DETAIL PS-34

FOR REVISION ONLY △1 △2

REGISTERED PROFESSIONAL ENGINEER SAKIUDDIN A. MOHAMMED No. 71894 CIVIL STATE OF CALIFORNIA

MECHANICAL PIPE SUPPORT DETAILS NO. 5

NO SCALE

M-21A

ALL DIMENSIONS IN MILLIMETERS UNLESS OTHERWISE SHOWN

FOR REDUCED PLANS ORIGINAL SCALE IS IN MILLIMETERS 0 20 40 60 80

USERNAME => Llorico
DGN FILE => 04-0120f1_0057S1r02.dgn

CU 04251 | EA 0120F1

DATE PLOTTED => 18-FEB-2014
TIME PLOTTED => 14:44

LAST REVISION 02-18-14

STATE OF CALIFORNIA - DEPARTMENT OF TRANSPORTATION

DESIGN OVERSIGHT: Rich Newell

CALCULATED/DESIGNED BY: BM DATE 10/31/02 REVISED BY
CHECKED BY: KH 1/15/02 DATE REVISED

DIST	COUNTY	ROUTE	KILOMETER POST TOTAL PROJECT	SHEET No	TOTAL SHEETS
04	SF	80	13.2/13.9	57S2 R1	1204

REGISTERED CIVIL ENGINEER — DATE 11/08/13

PLANS APPROVAL DATE

REGISTERED PROFESSIONAL ENGINEER — SAIFUDDIN A. MOHAMMED — No. 71894 — CIVIL — STATE OF CALIFORNIA

PARSONS BRINCKERHOFF QUADE & DOUGLAS, INC.
303 SECOND STREET, SUITE 700 N
SAN FRANCISCO, CA 94107

The State of California or its officers or agents shall not be responsible for the accuracy or completeness of electronic copies of this plan sheet.

Caltrans now has a web site! To get to the web site, go to http://www.dot.ca.gov

Caltrans Metric

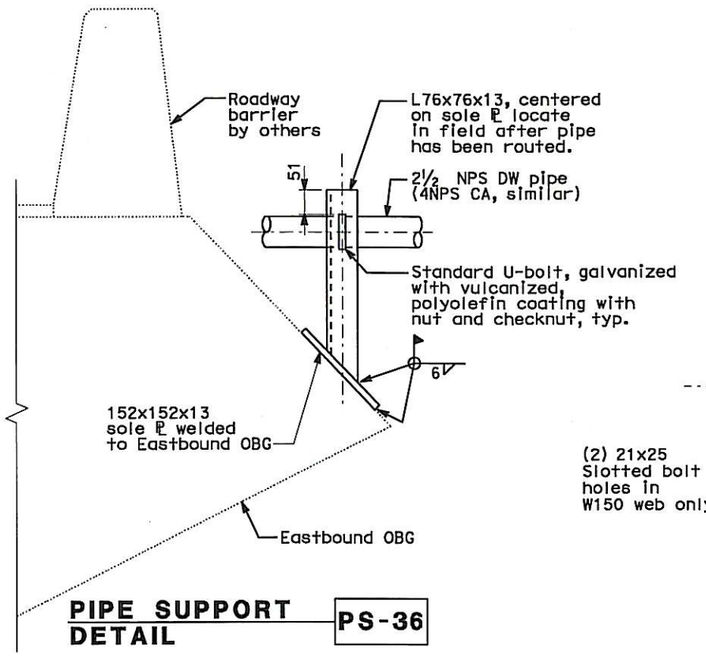

PIPE SUPPORT DETAIL PS-36

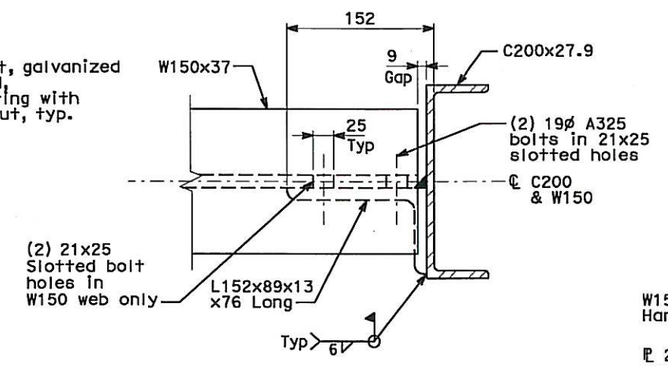

SECTION X-X

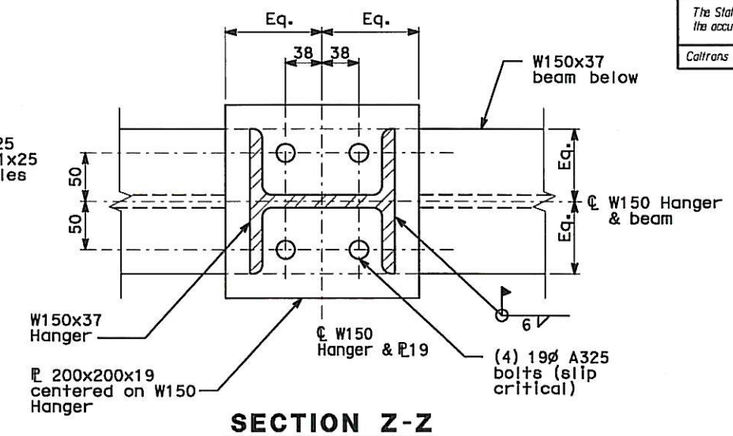

SECTION Z-Z

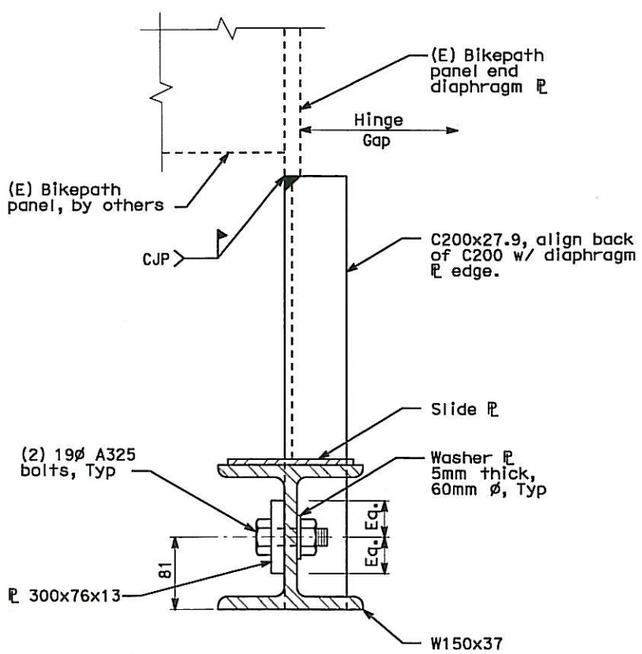

SECTION Y-Y

NOTES:

1. Contractor shall verify all dimensions in field.
2. 1
3. All welding shall be in accordance with Special Provisions.
4. Use 5mm thick washer plates at all bolted connections for PS-33 and PS-34.

REQUEST FOR INFORMATION NOT ADDRESSED IN THIS CCO REMAIN IN FORCE

MARK	DATE	DESCRIPTIONS	BY	CH'D	CCO#
1	02/18/14	MECHANICAL INTERFERENCE MODIFICATIONS	AM	BM	339
0	11/08/13	MECHANICAL INTERFERENCE MODIFICATIONS	AM	BM	339

REVISIONS

CONTRACT CHANGE ORDER NO. 339
SHEET 7 OF 7

MECHANICAL
PIPE SUPPORT DETAILS NO. 6
NO SCALE

M-21B

ALL DIMENSIONS IN MILLIMETERS UNLESS OTHERWISE SHOWN

CALCULATED/DESIGNED BY	AM	DATE 11/13	REVISED BY
CHECKED BY	BM	11/13	DATE REVISED

PROJECT ENGINEER: Rich Newell

STATE OF CALIFORNIA - DEPARTMENT OF TRANSPORTATION — Caltrans

FOR REDUCED PLANS ORIGINAL SCALE IS IN MILLIMETERS 0 20 40 60 80

USERNAME => Llorico
DGN FILE => 04-0120f1_0057S2r01.dgn

CU 04251 | EA 0120F1

LAST REVISION 02-18-14 | DATE PLOTTED => 18-FEB-2014 | TIME PLOTTED => 14:26