DIST.	COUNTY	ROUTE	KILOMETER POST TOTAL PROJECT	SHEET NO.	TOTAL SHEETS
04	SF	80	13.2/13.9	883SIR1	1204

REGISTERED ENGINEER - CIVIL

07-03-13

PLANS APPROVAL DATE

REGISTERED PROFESSIONAL ENGINEER Marwan N. Nader No. C 054426 Exp. 12/31/13 CIVIL STATE OF CALIFORNIA

The State of California or its officers or agents shall not be responsible for the accuracy or completeness of electronic copies of this plan sheet.

T.Y. LIN / MOFFATT & NICHOL
825 BATTERY STREET
SAN FRANCISCO, CA 94111

Caltrans now has a web site! To get to the web site, go to: http://www.dot.ca.gov

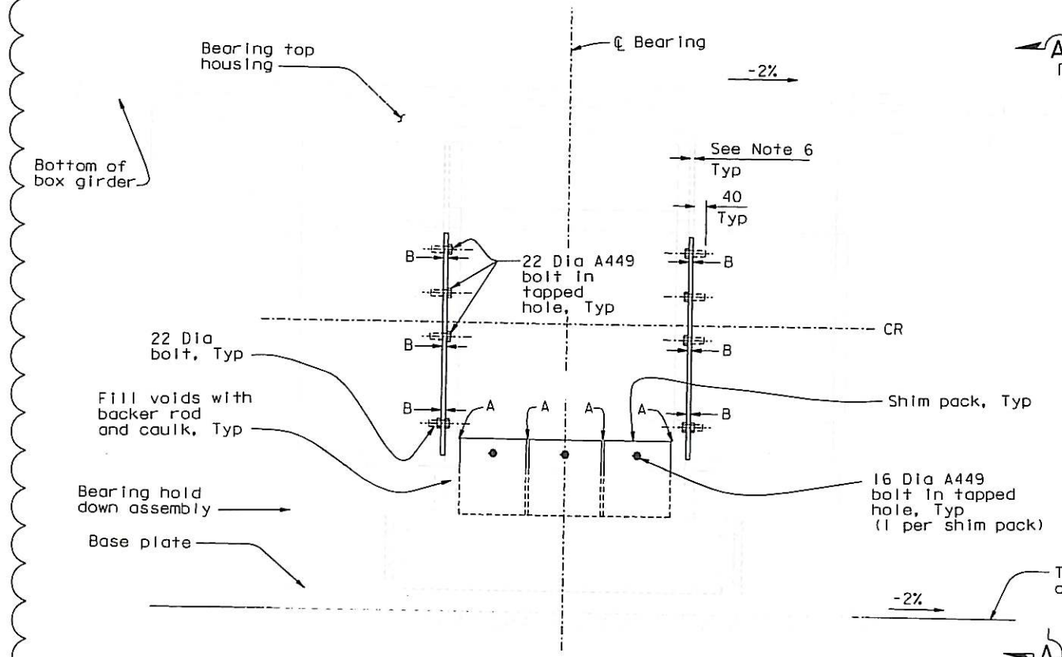

DETAIL OF BEARING ASSEMBLY
1:10

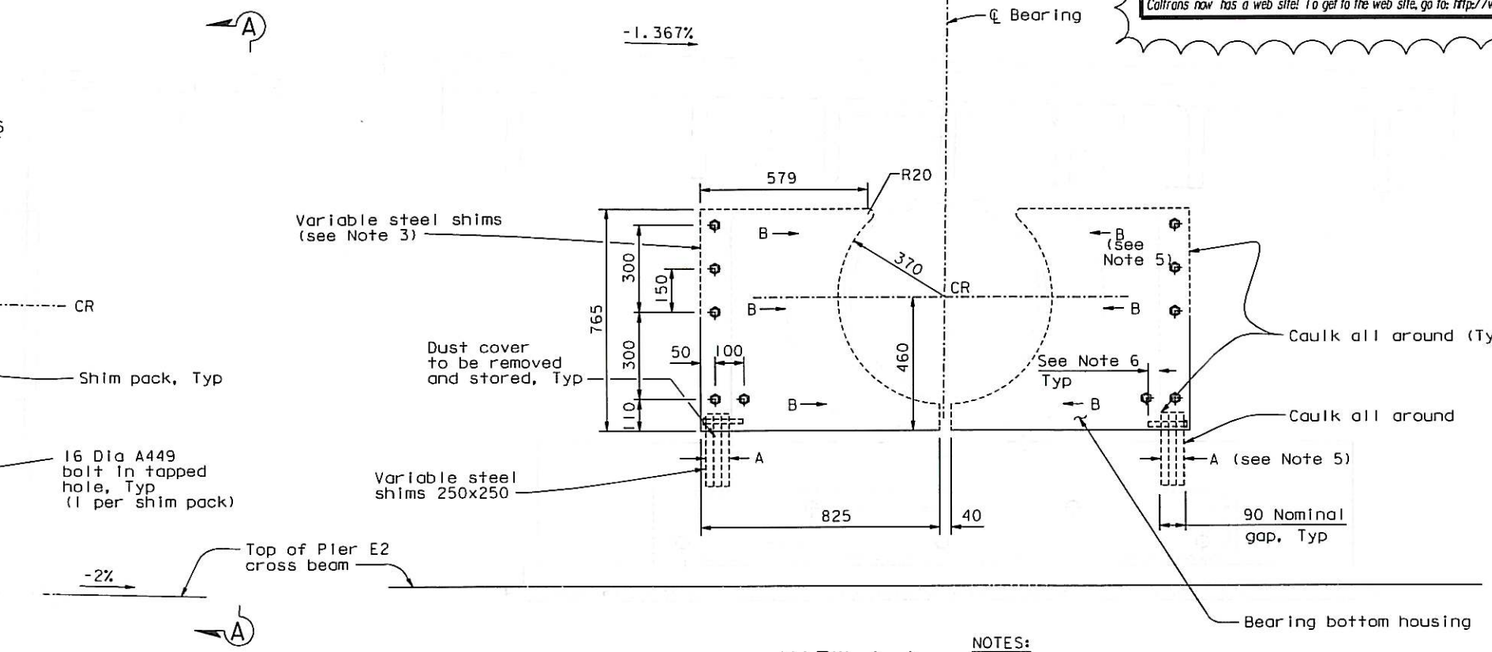

VIEW A-A
1:10

INSTALLATION SEQUENCE FOR BEARING SHIMS:

NOTE: Shimming shall be completed prior to SSO.

1. On one OBG (EB or WB), install longitudinal and transverse shimming on both bearings.
2. On the same OBG and for one temporary bearing at a time, transfer the load to the permanent bearing and remove temporary bearing shimming. Repeat for both temporary bearings.
3. Repeat Steps 1 & 2 for the remaining OBG.

NOTES:

1. Shims shall be ASTM A572, Grade 50. Shims shall be primed with one coat of zinc rich primer.
2. Each shim shall be PTFE coated on one side.
3. For each shim pack, provide 1 tapered shim and 1 flat shim only.
4. Shim tight to within 2 mm, total of all plies.
5. Variable shims shall be fabricated and provided based on field measurements of gaps in the bearing assembly. Gap "A" in the lower housing is 90 mm nominal. Gap "B" in the upper housing is 20 mm nominal.
6. Holes in bearing housing will be drilled and tapped with a usable thread length of 50 mm for a minimum thread engagement of 40 mm for 22 diameter fasteners and with a usable thread length of 38 mm for a minimum thread engagement of 28 mm for 16 diameter fasteners.
7. All bolts shall be installed snug tight plus 1/6 turn. Provide thread locking compound Locktite 243 or equivalent.

E2 BEARING SHIMMING

CONTRACT CHANGE ORDER NO. 338
SHEET 2 OF 2

REQUESTS FOR INFORMATION NOT ADDRESSED IN THIS CCO REMAIN IN FORCE

ALL DIMENSIONS ARE IN MILLIMETERS UNLESS OTHERWISE SHOWN

A. Akinsanya / W. Long
DESIGN OVERSIGHT
SIGN OFF DATE 07/23/13

MARK	DATE	DESCRIPTIONS	BY	CH'D	CCO#
1	07/23/13	PIER E2 BEARINGS INTERIM SHIMS	GB	MN	338
0	07/03/13	SHIMMING OF E2 BEARINGS	GB	MN	331

REVISIONS

DESIGN	BY G. Baker	CHECKED N. Vo
DETAILS	BY G. Baker	CHECKED N. Vo
QUANTITIES	BY G. Baker	CHECKED N. Vo

PREPARED FOR THE STATE OF CALIFORNIA DEPARTMENT OF TRANSPORTATION

M. Nader
PROJECT ENGINEER

BRIDGE NO. 34-0006L/R
KILOMETER POST 13.2/13.9

SAN FRANCISCO OAKLAND BAY BRIDGE
EAST SPAN SEISMIC SAFETY PROJECT
SELF-ANCHORED SUSPENSION BRIDGE
(SUPERSTRUCTURE & TOWER)

PIER E2 BEARING DETAILS NO. 1A

Rev. Date: 5-18-98

ORIGINAL SCALE IN MILLIMETERS FOR REDUCED PLANS 0 10 20 30 40 50 60 70 80 90 100

CU 04
EA 0120F1

DISREGARD PRINTS BEARING EARLIER REVISION DATES 07/03/13

REVISION DATES (PRELIMINARY STAGE ONLY)

SHEET 466SIR1 OF

FILE => L:\BB\04-012001\SAS\Contract Plans and CCO\CCO\CCO#338\1-Original 07-23-13\DGN\akbrg01a.dgn

100% PS&E

USERNAME => DWinrow DATE PLOTTED => 23 JUL 2013 TIME PLOTTED => 10:50:18