DIST.	COUNTY	ROUTE	KILOMETER POST TOTAL PROJECT	SHEET NO.	TOTAL SHEETS
04	SF	80	13.2/13.9	51951	1204

REGISTERED ENGINEER - CIVIL

07-01-13

PLANS APPROVAL DATE

The State of California or its officers or agents shall not be responsible for the accuracy or completeness of electronic copies of this plan sheet.

REGISTERED PROFESSIONAL ENGINEER — Marwan N. Nader — No. C 054426 — Exp. 12/31/13 — CIVIL — STATE OF CALIFORNIA

T.Y. LIN / MOFFATT & NICHOL
825 BATTERY STREET
SAN FRANCISCO, CA 94111

Caltrans now has a web site! To get to the web site, go to: http://www.dot.ca.gov

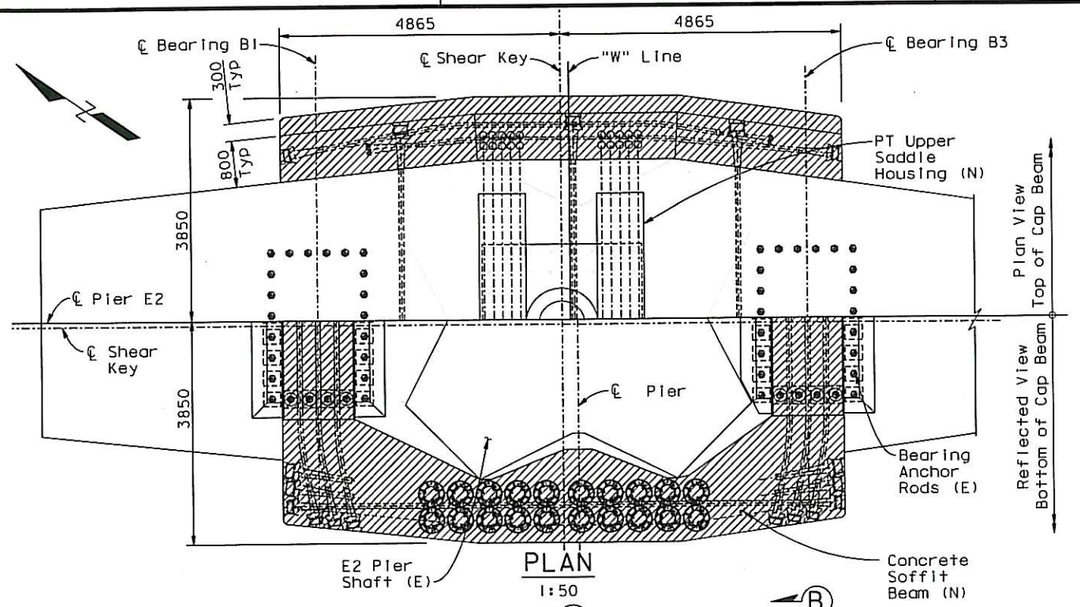

PLAN
1:50

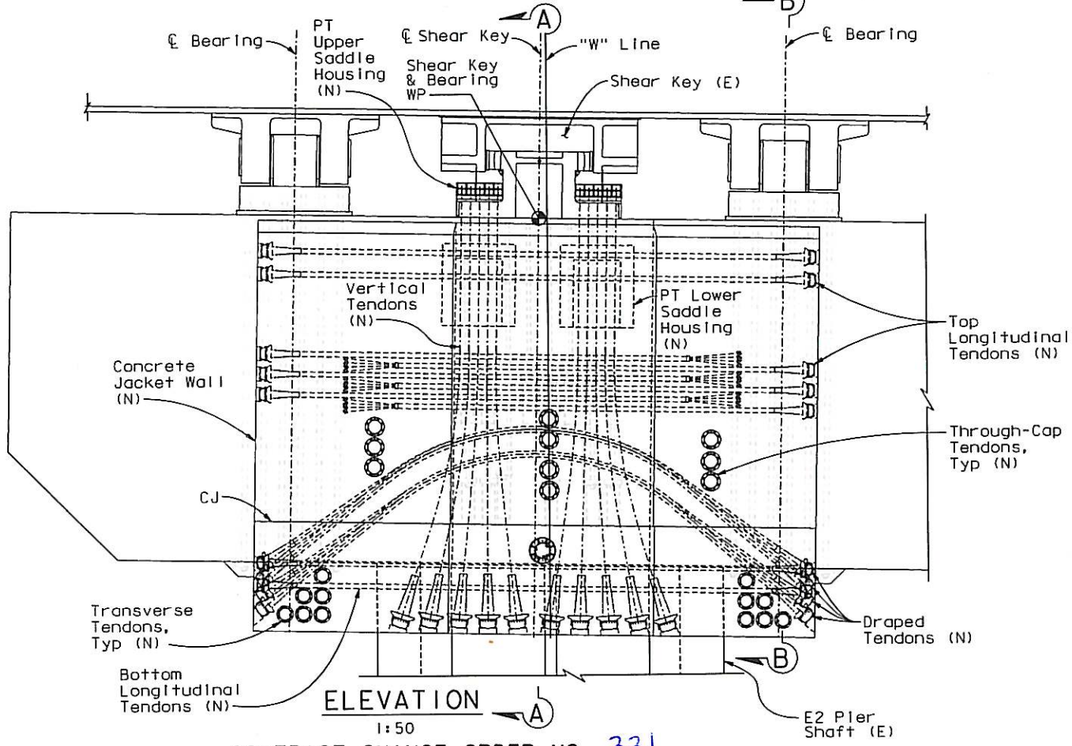

ELEVATION
1:50

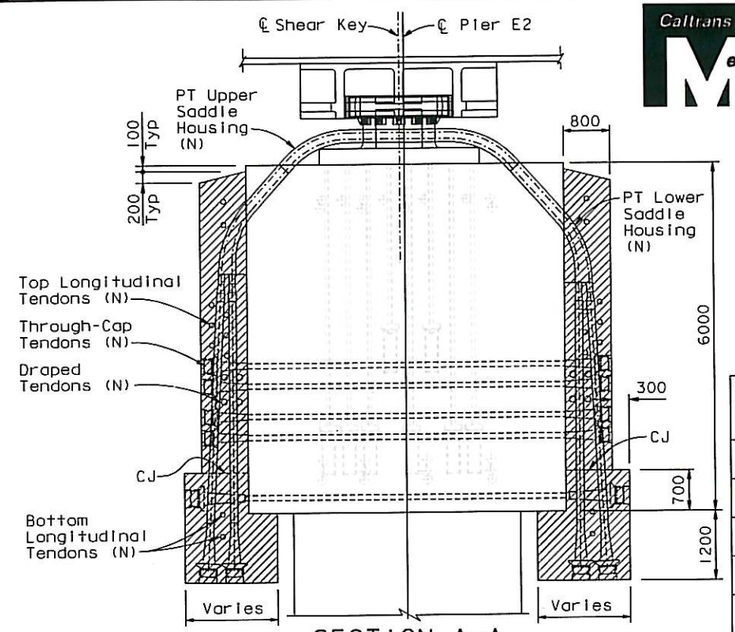

SECTION A-A
1:50

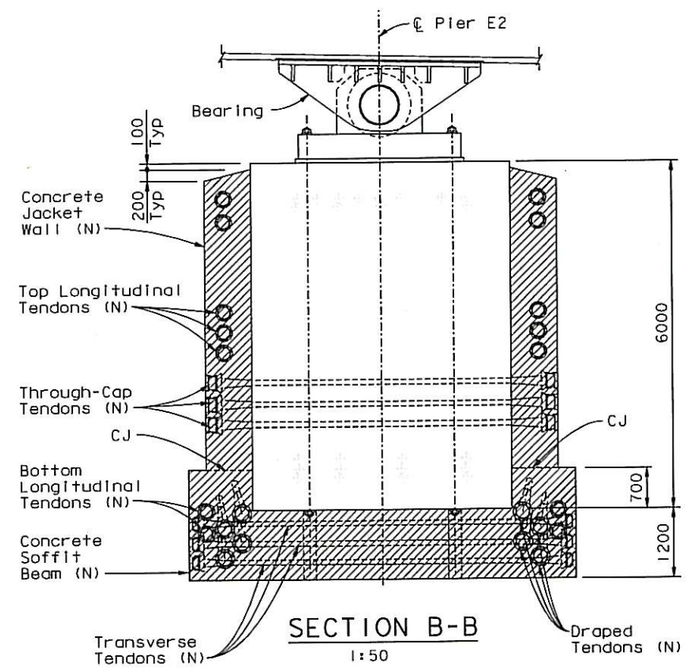

SECTION B-B
1:50

POST TENSIONING SUMMARY

Global Stressing Order	Tendon Group	No. Strands per Tendon	Number of Tendons
1	Bottom Longitudinal	12	8
2	Transverse	12	24
3	Through-Cap	19, 24	20, 2
4	Top Longitudinal	12	32
5, 7	Draped	19	16
6, 8	Vertical	26	40

INDEX TO PLANS

S-01 General Arrangement
S-02 Concrete Outlines
S-03 Vertical PT Geometry
S-04 Saddle Details No. 1
S-05 Saddle Details No. 2
S-06 Saddle Details No. 3
S-07 Saddle Details No. 4
S-08 Saddle Details No. 5
S-09 Saddle Details No. 6
S-10 PT Details No. 1
S-11 PT Details No. 2
S-12 PT Details No. 3
S-13 PT Details No. 4
S-14 Reinforcement Details No. 1
S-15 Reinforcement Details No. 2
S-16 Reinforcement Details No. 3
S-17 Reinforcement Details No. 4
S-18 Reinforcement Details No. 5
S-19 Reinforcement Details No. 6
S-20 Construction Details No. 1
S-21 Construction Details No. 2
S-22 Construction Details No. 3
S-23 Construction Details No. 4
S-24 Construction Details No. 5
S-25 Construction Details No. 6
S-26 Construction Details No. 7

LEGEND:

55 MPa Concrete (N)
(N) New
(E) Existing

CONTRACT CHANGE ORDER NO. 331
SHEET 6 OF 36

REQUESTS FOR INFORMATION NOT ADDRESSED IN THIS CCO REMAIN IN FORCE

ALL DIMENSIONS ARE IN MILLIMETERS UNLESS OTHERWISE SHOWN

A. Akinsanya / W. Long
DESIGN OVERSIGHT
SIGN OFF DATE 07/01/13

MARK	DATE	DESCRIPTIONS	BY	CH'D	CCO#
0	07/01/13	PIER E2 PLANS	AS	MN	331

REVISIONS

DESIGN	BY A. Sanjines	CHECKED S. Rodriguez	
DETAILS	BY M. Benoit	CHECKED H. Patel	
QUANTITIES	BY N. Vo	CHECKED J. Grove	

PREPARED FOR THE STATE OF CALIFORNIA DEPARTMENT OF TRANSPORTATION

M. Nader
PROJECT ENGINEER

BRIDGE NO. 34-0006L/R
KILOMETER POST 13.2/13.9

CU 04
EA 0120F1

SAN FRANCISCO OAKLAND BAY BRIDGE
EAST SPAN SEISMIC SAFETY PROJECT
SELF-ANCHORED SUSPENSION BRIDGE
(SUPERSTRUCTURE & TOWER)

S1 & S2 NEW DESIGN: GENERAL ARRANGEMENT

DISREGARD PRINTS BEARING EARLIER REVISION DATES 07/01/13
REVISION DATES (PRELIMINARY STAGE ONLY)
SHEET 1025I OF

Rev. Date: 5-22-13

ORIGINAL SCALE IN MILLIMETERS FOR REDUCED PLANS 0 10 20 30 40 50 60 70 80 90 100

FILE => I:\bb\04-012001\sas\contract plans and cco\cco\cco#331\1-original 07-01-13\dgn\aeplr11.dgn

100 % PS&E

DATE PLOTTED => 03 JUL 2013 TIME PLOTTED => 14:31:03
USERNAME => PHua

DIST.	COUNTY	ROUTE	KILOMETER POST TOTAL PROJECT	SHEET NO.	TOTAL SHEETS
04	SF	80	13.2/13.9	51952	1204

REGISTERED ENGINEER - CIVIL

07-01-13

PLANS APPROVAL DATE

REGISTERED PROFESSIONAL ENGINEER Marwan N. Nader No. C 054426 Exp. 12/31/13 CIVIL STATE OF CALIFORNIA

The State of California or its officers or agents shall not be responsible for the accuracy or completeness of electronic copies of this plan sheet.

T.Y. LIN / MOFFATT & NICHOL
825 BATTERY STREET
SAN FRANCISCO, CA 94111

Caltrans now has a web site! To get to the web site, go to: http://www.dot.ca.gov

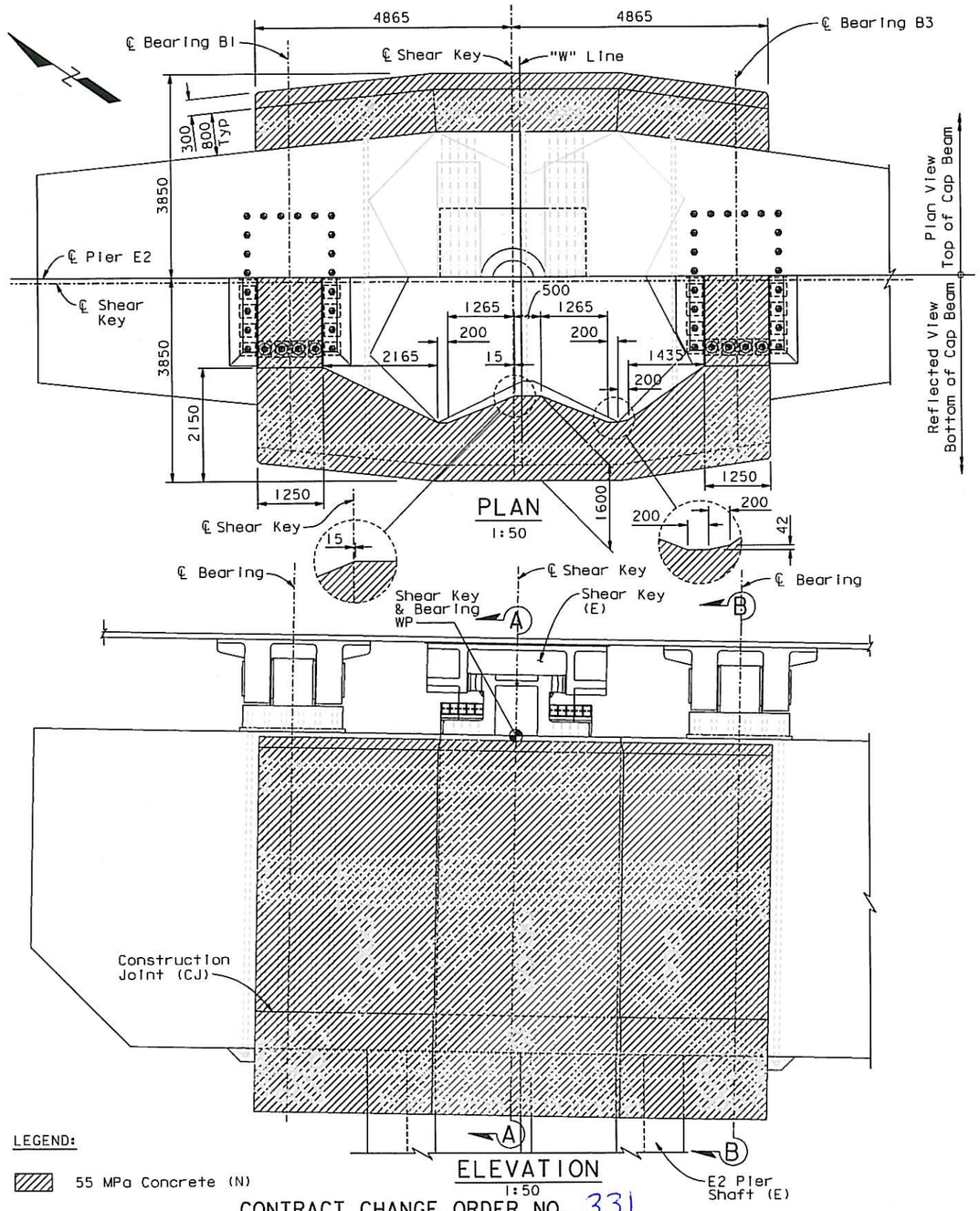

PLAN
1:50

ELEVATION
1:50

LEGEND:

55 MPa Concrete (N)

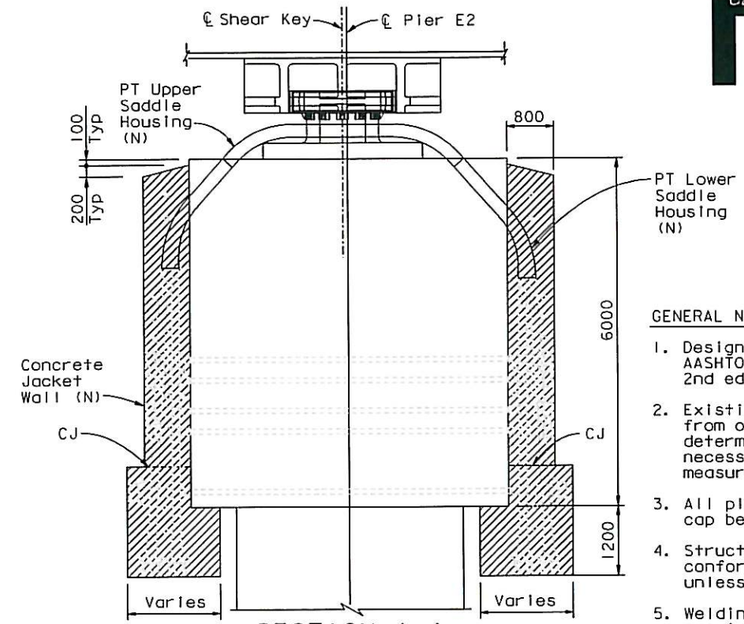

SECTION A-A
1:50

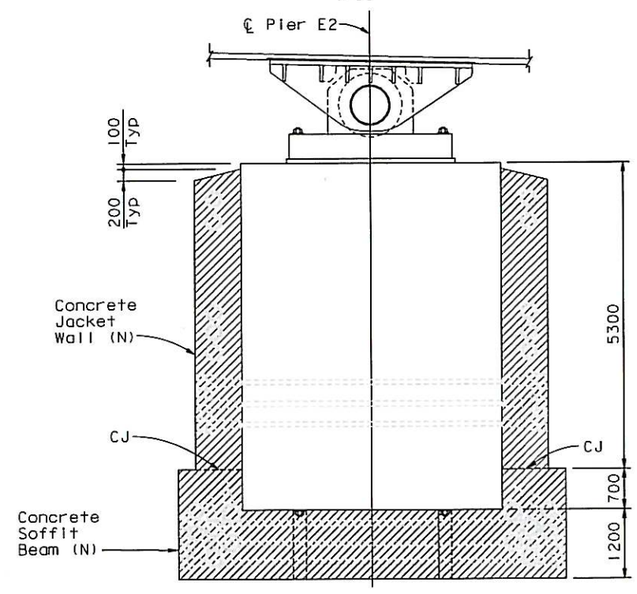

SECTION B-B
1:50

GENERAL NOTES:

1. Design: CalTrans Bridge Design Specification and AASHTO Guide Specifications for LRFD Seismic Design, 2nd edition.
2. Existing Conditions: Dimensions shown are taken from original design drawings. The Contractor shall determine and establish all dimensions and details necessary for the completion of all work by field measurement and survey.
3. All plan dimensions along longitudinal axis of cap beam are given at 2% slope to true horizontal.
4. Structural Steel: All structural plate shall conform to the requirements of ASTM A709M Grade 345 unless noted otherwise.
5. Welding: All welding shall comply with the provisions of the AASHTO / AWS Bridge Welding Code (ANSI / AASHTO / AWS D 1.5).
6. Design clearances require that the Shear Key Bushing and Housing Assembly be fabricated in two horizontal pieces.
7. Existing shear key shall be prepared to near white finish and coated to achieve a Class B surface. For new saddle component finishes, see SP10-1.59.
8. Coating: All exposed structural steel and components shall be coated with the project specified coating system (SP10-1.69).
9. Prestressing strands shall conform to ASTM A416, 15mm low relaxation, 7-wire strands with ultimate strength Fu = 1860 MPa. All post tensioning shall be jacked to 75% of Fu. Design assumes that 600T multi-strand rams will be used.
10. A compressive strength of 55 MPa (f'ci) shall be attained in the concrete soffit beam prior to stressing. A minimum compressive strength of 36 MPa (f'ci) shall be attained in the concrete jacket wall prior to stressing.
11. Ducts shall be grouted with high strength non-shrink grout (f'c = 55 MPa).
12. Reinforced Concrete: f'c = 55 MPa.
13. Mild steel reinforcement shall comply with ASTM A706 - fy = 415 MPa, fu = 738 MPa.
14. Pourable chocking compound (Sikadur 35 LV or similar) may be applied on designated surfaces to provide uniform bearing. Maximum placement thickness shall not exceed product specification.
15. "Drill & bond dowels" are to be installed with an approved chemical adhesive anchor system.
16. Studs shall be A108.

CONTRACT CHANGE ORDER NO. 331
SHEET 7 OF 36

REQUESTS FOR INFORMATION NOT ADDRESSED IN THIS CCO REMAIN IN FORCE

ALL DIMENSIONS ARE IN MILLIMETERS UNLESS OTHERWISE SHOWN

A. Akinsanya / W. Long
DESIGN OVERSIGHT
SIGN OFF DATE 07/01/13

Rev. Date: 5-22-13

MARK	DATE	DESCRIPTIONS	BY	CH'D	CCO#
0	07/01/13	PIER E2 PLANS	AS	MN	331

REVISIONS

DESIGN	BY A. Sanjines	CHECKED S. Rodriguez	
DETAILS	BY M. Benoit	CHECKED H. Patel	
QUANTITIES	BY N. Vo	CHECKED J. Grove	

ORIGINAL SCALE IN MILLIMETERS FOR REDUCED PLANS 0 10 20 30 40 50 60 70 80 90 100

PREPARED FOR THE STATE OF CALIFORNIA DEPARTMENT OF TRANSPORTATION

M. Nader
PROJECT ENGINEER

CU 04
EA 0120F1

BRIDGE NO. 34-0006L/R
KILOMETER POST 13.2/13.9

DISREGARD PRINTS BEARING EARLIER REVISION DATES → 07/01/13

SAN FRANCISCO OAKLAND BAY BRIDGE
EAST SPAN SEISMIC SAFETY PROJECT
SELF-ANCHORED SUSPENSION BRIDGE
(SUPERSTRUCTURE & TOWER)

S1 & S2 NEW DESIGN: CONCRETE OUTLINES

SHEET 102S2 OF

FILE => I:\bb\04-01200I\sas\contract plans and cco\cco\cco#331\1-original 07-01-13\dgn\aeplr12.dgn

100 % PS&E

DATE PLOTTED => 03 JUL 2013 TIME PLOTTED => 14:32:14

USERNAME => PHUO

DIST.	COUNTY	ROUTE	KILOMETER POST TOTAL PROJECT	SHEET NO.	TOTAL SHEETS
04	SF	80	13.2/13.9	519S3	1204

REGISTERED ENGINEER - CIVIL

07-01-13

PLANS APPROVAL DATE

The State of California or its officers or agents shall not be responsible for the accuracy or completeness of electronic copies of this plan sheet.

REGISTERED PROFESSIONAL ENGINEER Marwan N. Nader No. C 054426 Exp. 12/31/13 CIVIL STATE OF CALIFORNIA

T.Y. LIN / MOFFATT & NICHOL
825 BATTERY STREET
SAN FRANCISCO, CA 94111

Caltrans now has a web site! To get to the web site, go to: http://www.dot.ca.gov

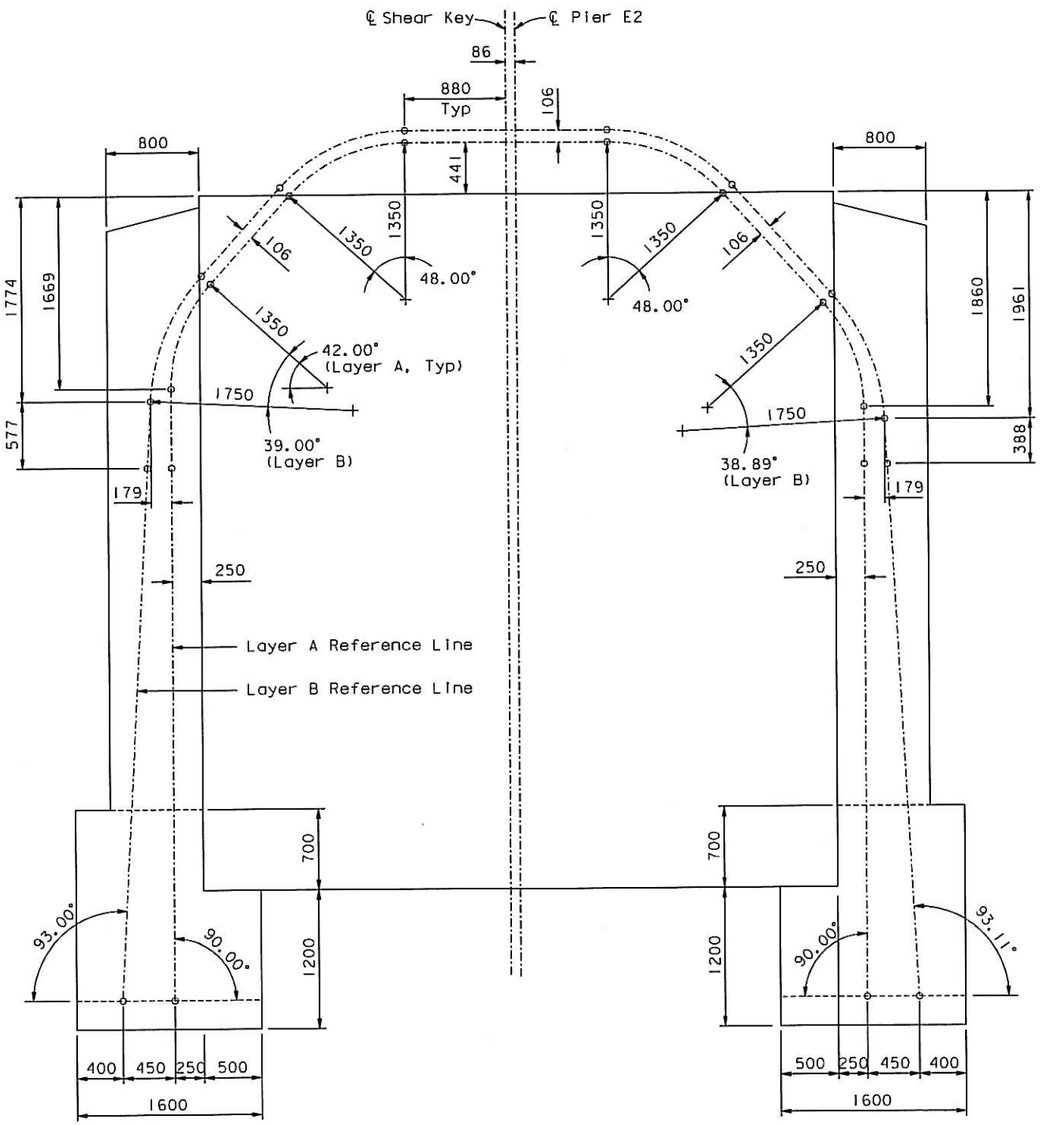

SECTION
1:25

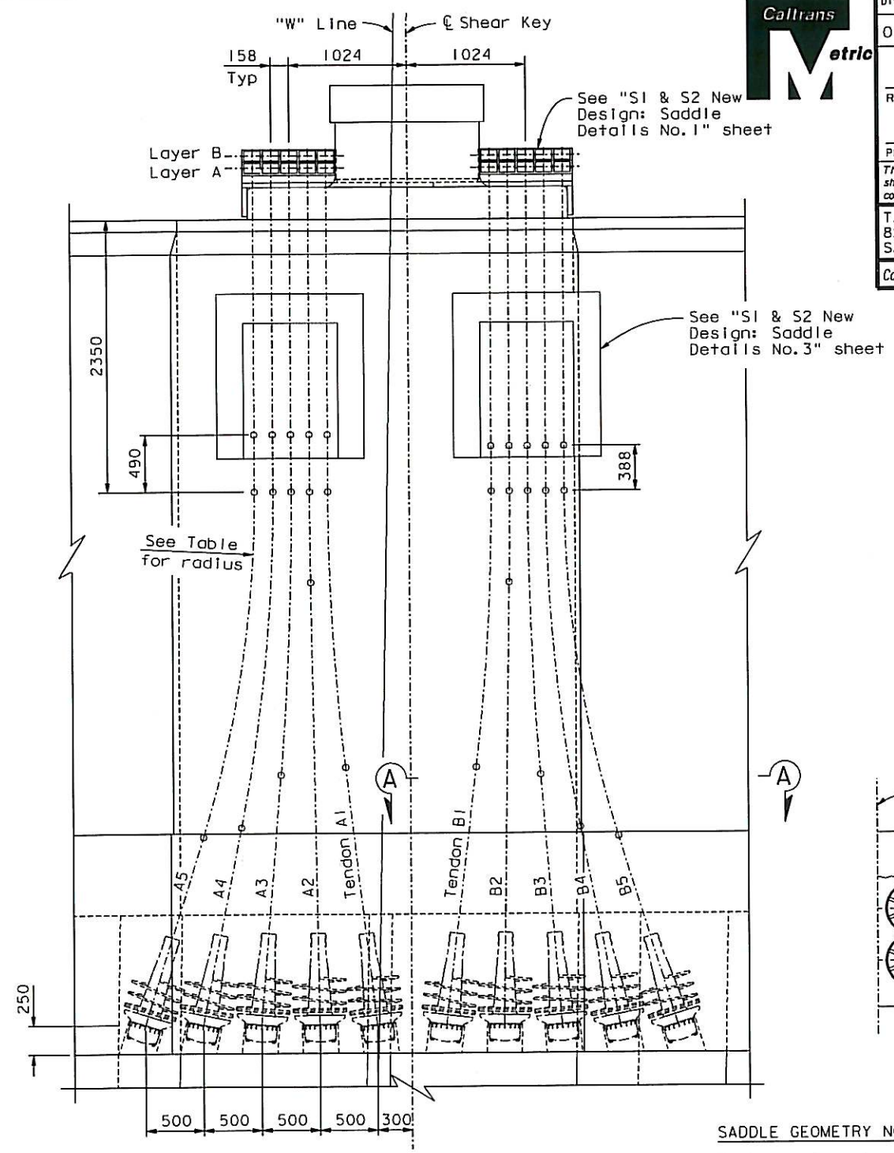

ELEVATION
1:25
(LOOKING DOWN ON STATION)

VERTICAL POST TENSIONING ANCHOR ORIENTATION

Tendon	Angle (°)	Radius
A1	-6.83°	20.0 m
B1		
A2	-0.90°	50.0 m
B2		
A3	4.67°	30.0 m
B3		
A4	11.15°	15.0 m
B4		
A5	17.33°	10.0 m
B5		

Angles measured from 2% offset from vertical

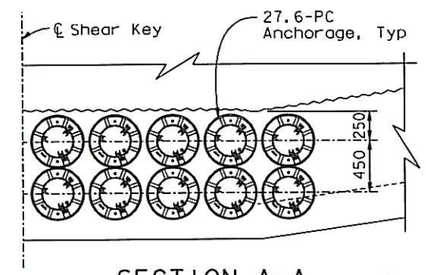

SECTION A-A
1:25

SADDLE GEOMETRY NOTES:

1. Layer A anchorages align on a straight axis 250 off of existing cap beam wall, see Section A-A.
2. Tendon names and geometry are symmetrical about ℄ of Shear Key. "A" indicates tendons in inner level, "B" indicates tendons in outer level.
3. Reference lines for Layers A & B within the saddle assembly are located 43 mm and 38 mm above tray interior bottom surface, respectively. Shift from reference line to center of duct occurs within transition to corrugated duct.

CONTRACT CHANGE ORDER NO. 331
SHEET 8 OF 36

REQUESTS FOR INFORMATION NOT ADDRESSED IN THIS CCO REMAIN IN FORCE

ALL DIMENSIONS ARE IN MILLIMETERS UNLESS OTHERWISE SHOWN

A. Akinsanya / W. Long
DESIGN OVERSIGHT
SIGN OFF DATE 07/01/13

MARK	DATE	DESCRIPTIONS	BY	CH'D	CCO#
0	07/01/13	PIER E2 PLANS	AS	MN	331

REVISIONS

DESIGN	BY A. Sanjines	CHECKED S. Rodriguez	
DETAILS	BY C. Hovell	CHECKED H. Patel	
QUANTITIES	BY N. Vo	CHECKED J. Grove	

PREPARED FOR THE STATE OF CALIFORNIA DEPARTMENT OF TRANSPORTATION

M. Nader
PROJECT ENGINEER

BRIDGE NO. 34-0006L/R
KILOMETER POST 13.2/13.9

SAN FRANCISCO OAKLAND BAY BRIDGE
EAST SPAN SEISMIC SAFETY PROJECT
SELF-ANCHORED SUSPENSION BRIDGE
(SUPERSTRUCTURE & TOWER)

S1 & S2 NEW DESIGN: VERTICAL PT GEOMETRY

Rev. Date: 5-22-13

ORIGINAL SCALE IN MILLIMETERS FOR REDUCED PLANS 0 10 20 30 40 50 60 70 80 90 100

CU 04
EA 0120F1

DISREGARD PRINTS BEARING EARLIER REVISION DATES → 07/01/13

REVISION DATES (PRELIMINARY STAGE ONLY)

SHEET 1025S3 OF

FILE => I:\bb\04-012001\sas\contract plans and cco\cco\cco#331\1-original 07-01-13\dgn\aepir13.dgn

100 % PS&E

DATE PLOTTED => 03 JUL 2013 TIME PLOTTED => 14:32:46

USERNAME => PHUA

DIST.	COUNTY	ROUTE	KILOMETER POST TOTAL PROJECT	SHEET NO.	TOTAL SHEETS
04	SF	80	13.2/13.9	51954	1204

REGISTERED ENGINEER - CIVIL

07-01-13

PLANS APPROVAL DATE

REGISTERED PROFESSIONAL ENGINEER Marwan N. Nader No. C 054426 Exp. 12/31/13 CIVIL STATE OF CALIFORNIA

The State of California or its officers or agents shall not be responsible for the accuracy or completeness of electronic copies of this plan sheet.

T.Y. LIN / MOFFATT & NICHOL
825 BATTERY STREET
SAN FRANCISCO, CA 94111

Caltrans now has a web site! To get to the web site, go to: http://www.dot.ca.gov

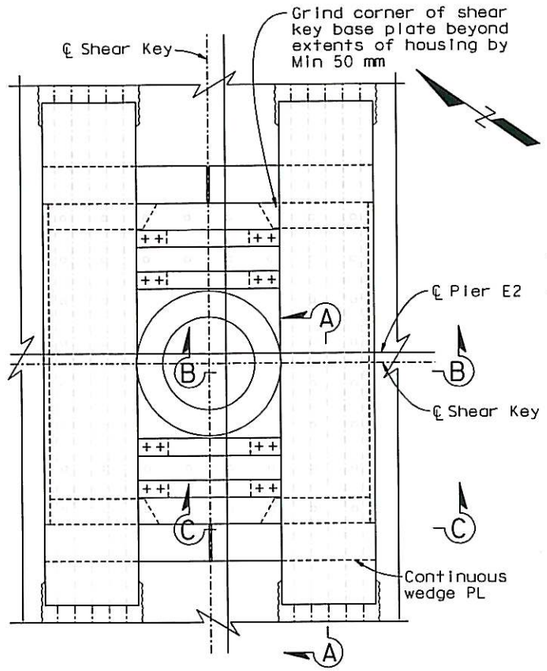

KEY PLAN - UPPER SADDLE

1:25

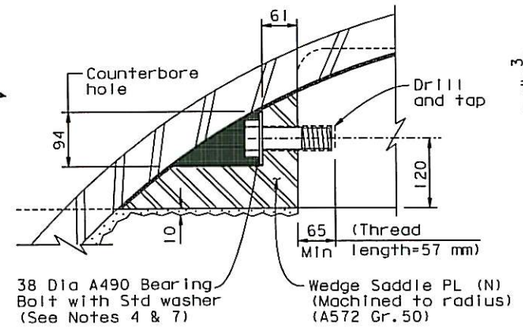

DETAIL A

1:5

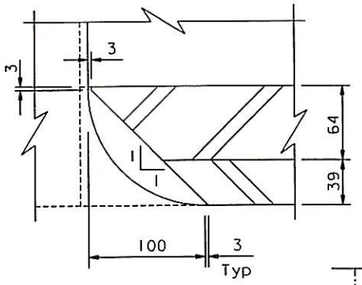

DETAIL B

1:2.5
See note 8

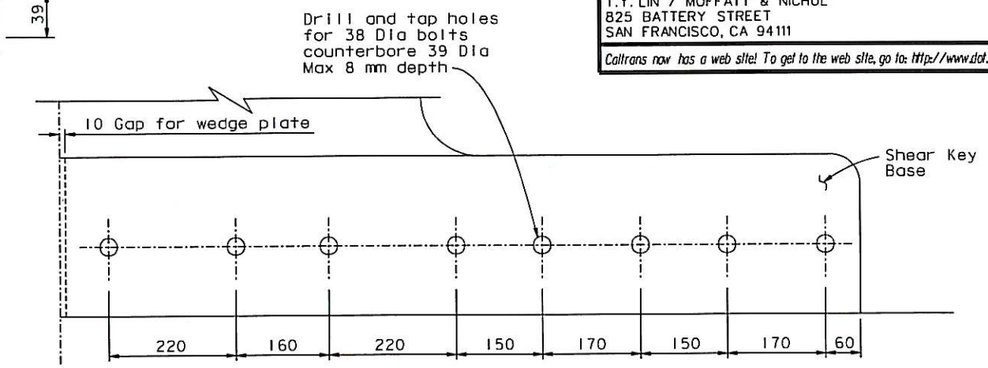

SECTION C-C

1:5

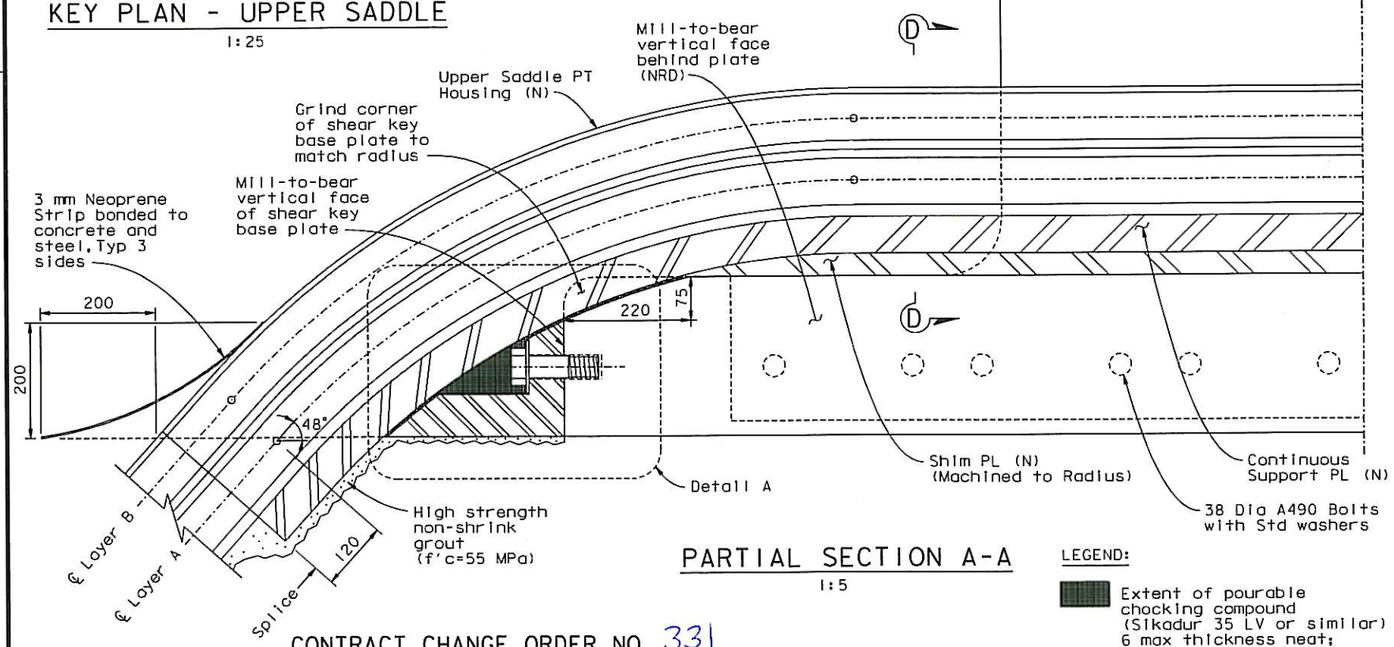

PARTIAL SECTION A-A

1:5

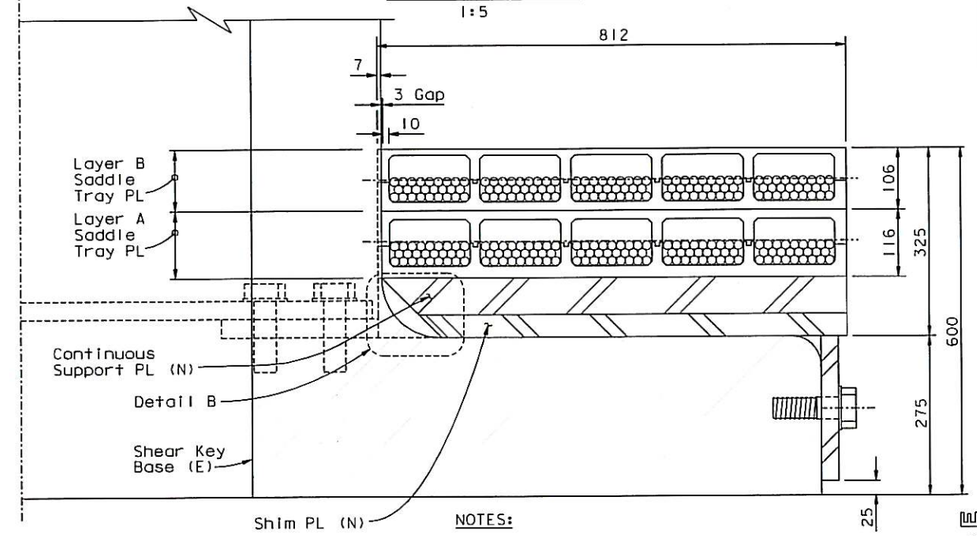

SECTION B-B

1:5

LEGEND:

Extent of pourable chocking compound (Sikadur 35 LV or similar) 6 max thickness neat; place in bolt recess in lifts with max thickness per material specification

6. For Section D-D, see "S1 & S2 New Design: Saddle Details No. 2" sheet.
7. Apply Loctite or equal to threads prior to installing bolts.
8. Trim plates only around shear key fillet.
9. All bolts connecting the saddle to the existing shear key shall be snug tight.

NOTES:

1. Survey shall be used to set final dimensions.
2. Confirm geometry with full shop assembly prior to delivery to site.
3. Shop PJP welds shall be ground flush with surface.
4. Install uncoated black bolt and paint exposed surfaces with two (2) coats of Caltrans approved organic zinc rich primer prior to epoxy backfill.
5. Contractor to provide erection tabs and lifting lugs per their means and methods.

ALL DIMENSIONS ARE IN MILLIMETERS UNLESS OTHERWISE SHOWN

CONTRACT CHANGE ORDER NO. 331
SHEET 9 OF 36

REQUESTS FOR INFORMATION NOT ADDRESSED IN THIS CCO REMAIN IN FORCE

A. Akinsanya / W. Long
DESIGN OVERSIGHT
SIGN OFF DATE 07/01/13

MARK	DATE	DESCRIPTIONS	BY	CH'D	CCO#
0	07/01/13	PIER E2 PLANS	AS	MN	331

REVISIONS

DESIGN	BY A. Sanjines	CHECKED S. Rodriguez	
DETAILS	BY J. Denis	CHECKED G. Baker	
QUANTITIES	BY N. Vo	CHECKED J. Grove	

PREPARED FOR THE STATE OF CALIFORNIA DEPARTMENT OF TRANSPORTATION

M. Nader
PROJECT ENGINEER

BRIDGE NO. 34-0006L/R
KILOMETER POST 13.2/13.9

SAN FRANCISCO OAKLAND BAY BRIDGE
EAST SPAN SEISMIC SAFETY PROJECT
SELF-ANCHORED SUSPENSION BRIDGE
(SUPERSTRUCTURE & TOWER)

S1 & S2 NEW DESIGN: SADDLE DETAILS NO. 1

Rev. Date: 5-22-13

ORIGINAL SCALE IN MILLIMETERS FOR REDUCED PLANS 0 10 20 30 40 50 60 70 80 90 100

CU 04
EA 0120F1

DISREGARD PRINTS BEARING EARLIER REVISION DATES 07/01/13

REVISION DATES (PRELIMINARY STAGE ONLY)

SHEET 102S4 OF

FILE => L:\BB\04-012001\SAS\Contract Plans and CCO\CCO\CCO#331\1-Original 07-01-13\DGN\aeplr14.dgn

100 % PS&E

USERNAME => arivera DATE PLOTTED => 03 JUL 2013 TIME PLOTTED => 16:38:57

DIST.	COUNTY	ROUTE	KILOMETER POST TOTAL PROJECT	SHEET NO.	TOTAL SHEETS
04	SF	80	13.2/13.9	51955	1204

REGISTERED ENGINEER - CIVIL

07-01-13

PLANS APPROVAL DATE

REGISTERED PROFESSIONAL ENGINEER Marwan N. Nader No. C 054426 Exp. 12/31/13 CIVIL STATE OF CALIFORNIA

The State of California or its officers or agents shall not be responsible for the accuracy or completeness of electronic copies of this plan sheet.

T.Y. LIN / MOFFATT & NICHOL
825 BATTERY STREET
SAN FRANCISCO, CA 94111

Caltrans now has a web site! To get to the web site, go to: http://www.dot.ca.gov

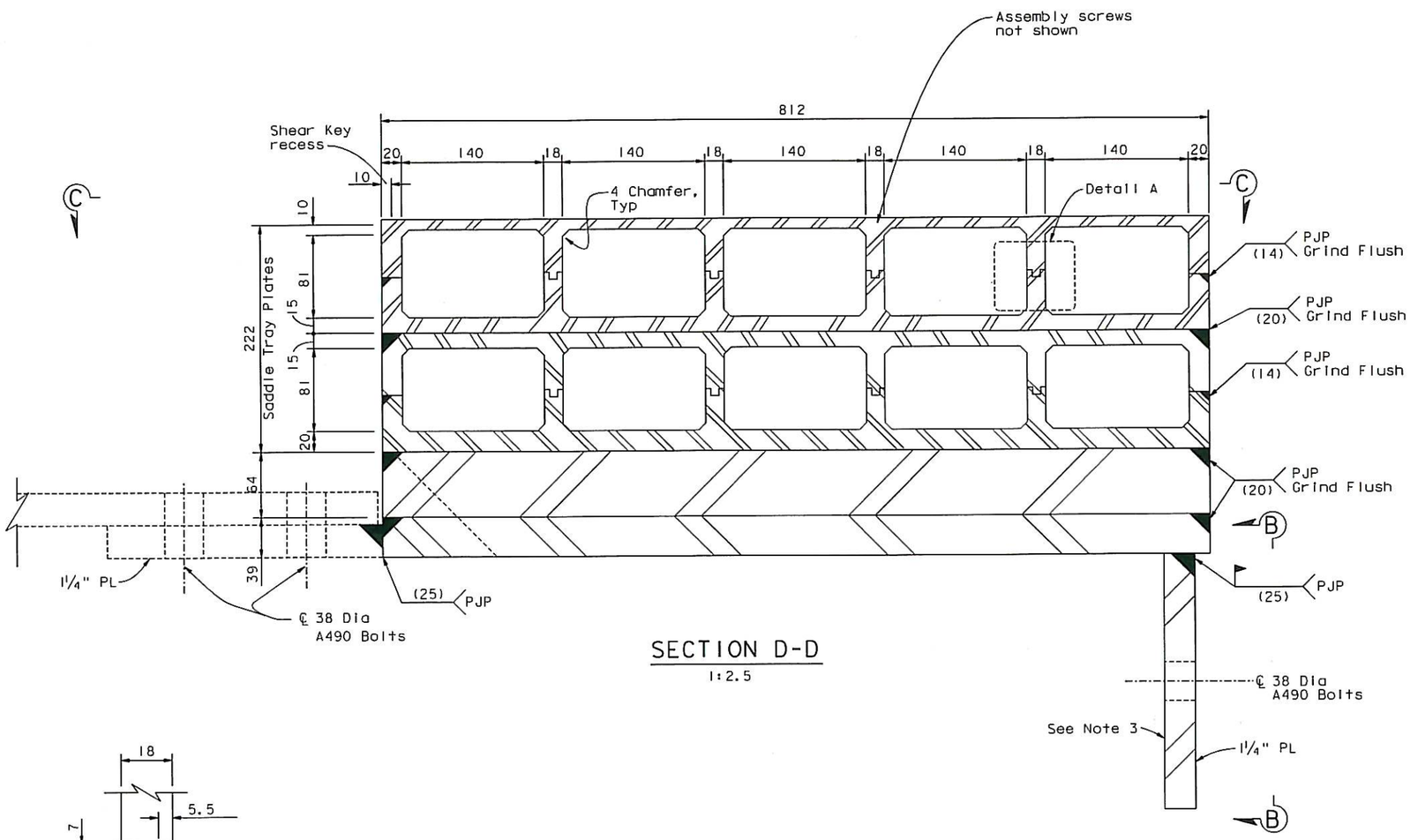

SECTION D-D
1:2.5

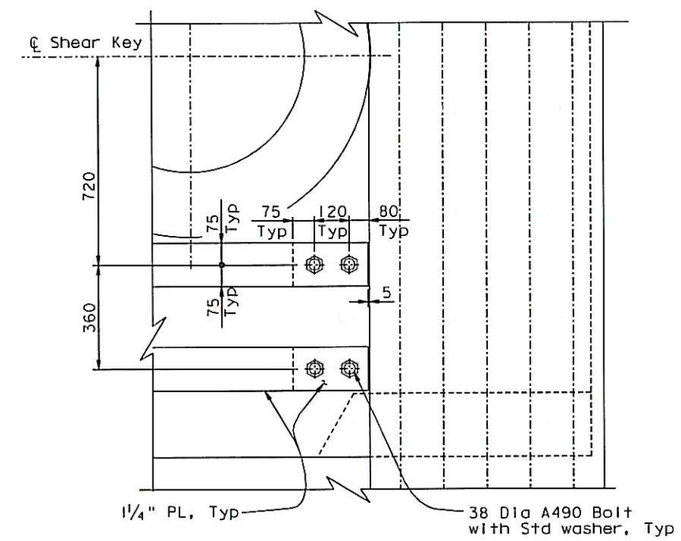

PLAN VIEW C-C
1:10

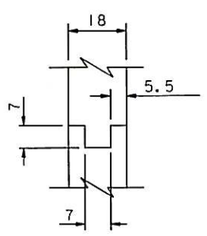

DETAIL A
1:1

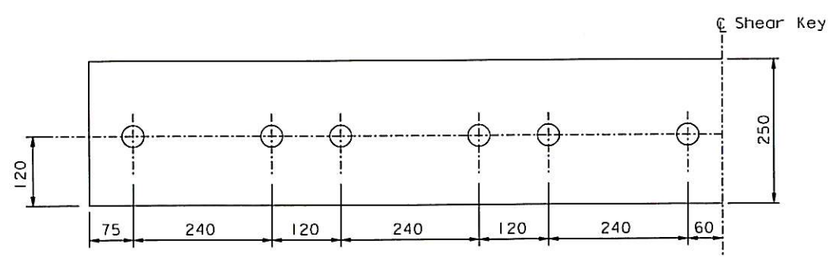

VIEW B-B
1:5

NOTES:

1. All key ways shall be sealed.
2. Welds shown are typical for upper and lower Saddle PT housings.
3. Connect side plate to shear key prior to welding.
4. Saddle assemblies shall be tested per Special Provisions.

CONTRACT CHANGE ORDER NO. 331
SHEET 10 OF 36

REQUESTS FOR INFORMATION NOT ADDRESSED IN THIS CCO REMAIN IN FORCE

ALL DIMENSIONS ARE IN MILLIMETERS UNLESS OTHERWISE SHOWN

A. Akinsanya / W. Long
DESIGN OVERSIGHT
SIGN OFF DATE 07/01/13

MARK	DATE	DESCRIPTIONS	BY	CH'D	CCO#
0	07/01/13	PIER E2 PLANS	AS	MN	331

REVISIONS

DESIGN	BY A. Sanjines	CHECKED	S. Rodriguez
DETAILS	BY J. Denis	CHECKED	G. Baker
QUANTITIES	BY N. Vo	CHECKED	J. Grove

PREPARED FOR THE STATE OF CALIFORNIA DEPARTMENT OF TRANSPORTATION

M. Nader
PROJECT ENGINEER

BRIDGE NO. 34-0006L/R
KILOMETER POST 13.2/13.9

SAN FRANCISCO OAKLAND BAY BRIDGE
EAST SPAN SEISMIC SAFETY PROJECT
SELF-ANCHORED SUSPENSION BRIDGE
(SUPERSTRUCTURE & TOWER)

S1 & S2 NEW DESIGN: SADDLE DETAILS NO.2

Rev. Date: 5-22-13

ORIGINAL SCALE IN MILLIMETERS FOR REDUCED PLANS 0 10 20 30 40 50 60 70 80 90 100

CU 04
EA 0120F1

DISREGARD PRINTS BEARING EARLIER REVISION DATES

REVISION DATES (PRELIMINARY STAGE ONLY) 07/01/13

SHEET 10255 OF

FILE => L:\BB\04-012001\SAS\Contract Plans and CCO\CCO\CCO#331\1-Original 07-01-13\DGN\aepir15.dgn

100 % PS&E

USERNAME => arivera DATE PLOTTED => 03 JUL 2013 TIME PLOTTED => 16:41:22

DIST.	COUNTY	ROUTE	KILOMETER POST TOTAL PROJECT	SHEET NO.	TOTAL SHEETS
04	SF	80	13.2/13.9	519S6	1204

REGISTERED ENGINEER - CIVIL

07-01-13

PLANS APPROVAL DATE

The State of California or its officers or agents shall not be responsible for the accuracy or completeness of electronic copies of this plan sheet.

PROFESSIONAL ENGINEER REGISTERED Marwan N. Nader No. C 054426 Exp. 12/31/13 CIVIL STATE OF CALIFORNIA

T.Y. LIN / MOFFATT & NICHOL
825 BATTERY STREET
SAN FRANCISCO, CA 94111

Caltrans now has a web site! To get to the web site, go to: http://www.dot.ca.gov

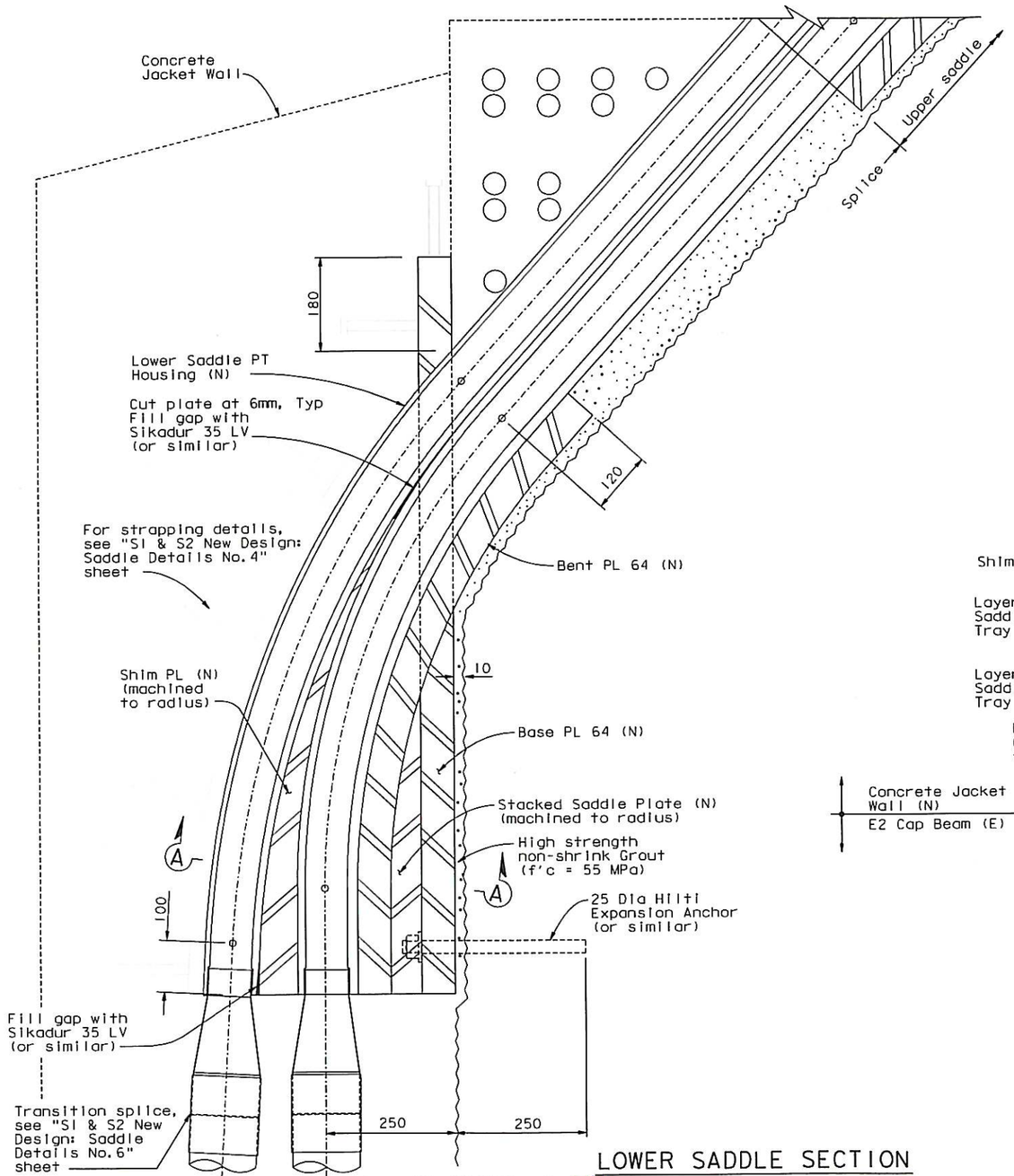

LOWER SADDLE SECTION

1:5

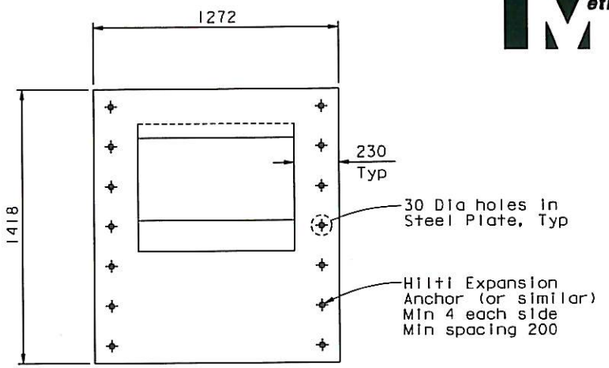

BASE PLATE DETAIL

1:15

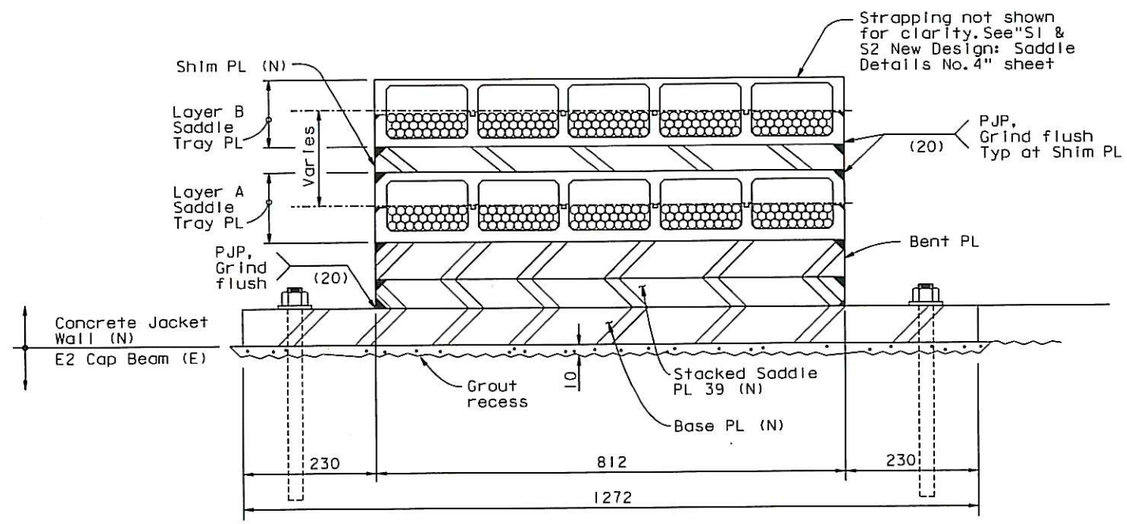

SECTION A-A

1:5

NOTES:

1. Lower saddle must be supported until expansion anchors are installed and nuts have been tightened.
2. For lower saddle weld details not given, see "S1 & S2 New Design: Saddle Details No. 2" sheet.

CONTRACT CHANGE ORDER NO. 331
SHEET 11 OF 36

REQUESTS FOR INFORMATION NOT ADDRESSED IN THIS CCO REMAIN IN FORCE

ALL DIMENSIONS ARE IN MILLIMETERS UNLESS OTHERWISE SHOWN

A. Akinsanya / W. Long
DESIGN OVERSIGHT
SIGN OFF DATE 07/01/13

MARK	DATE	DESCRIPTIONS	BY	CH'D	CCO#
0	07/01/13	PIER E2 PLANS	AS	MN	331

REVISIONS

DESIGN	BY A. Sanjines	CHECKED S. Rodriguez	
DETAILS	BY J. Denis	CHECKED G. Baker	
QUANTITIES	BY N. Vo	CHECKED J. Grove	

PREPARED FOR THE STATE OF CALIFORNIA DEPARTMENT OF TRANSPORTATION

M. Nader
PROJECT ENGINEER

BRIDGE NO. 34-0006L/R
KILOMETER POST 13.2/13.9

SAN FRANCISCO OAKLAND BAY BRIDGE
EAST SPAN SEISMIC SAFETY PROJECT
SELF-ANCHORED SUSPENSION BRIDGE
(SUPERSTRUCTURE & TOWER)

S1 & S2 NEW DESIGN: SADDLE DETAILS NO. 3

Rev. Date: 5-22-13

ORIGINAL SCALE IN MILLIMETERS FOR REDUCED PLANS 0 10 20 30 40 50 60 70 80 90 100

CU 04
EA 0120F1

DISREGARD PRINTS BEARING EARLIER REVISION DATES

REVISION DATES (PRELIMINARY STAGE ONLY) 07/01/13

SHEET 102S6 OF

FILE => I:\bb\04-012001\sas\contract plans and cco\cco\cco#331\1-original 07-01-13\dgn\aeplr16.dgn

100 % PS&E

DATE PLOTTED => 03 JUL 2013 TIME PLOTTED => 14:35:09

USERNAME => PHUO

DIST.	COUNTY	ROUTE	KILOMETER POST TOTAL PROJECT	SHEET NO.	TOTAL SHEETS
04	SF	80	13.2/13.9	51957	1204

REGISTERED ENGINEER - CIVIL

07-01-13

PLANS APPROVAL DATE

REGISTERED PROFESSIONAL ENGINEER Marwan N. Nader No. C 054426 Exp. 12/31/13 CIVIL STATE OF CALIFORNIA

The State of California or its officers or agents shall not be responsible for the accuracy or completeness of electronic copies of this plan sheet.

T.Y. LIN / MOFFATT & NICHOL
825 BATTERY STREET
SAN FRANCISCO, CA 94111

Caltrans now has a web site! To get to the web site, go to: http://www.dot.ca.gov

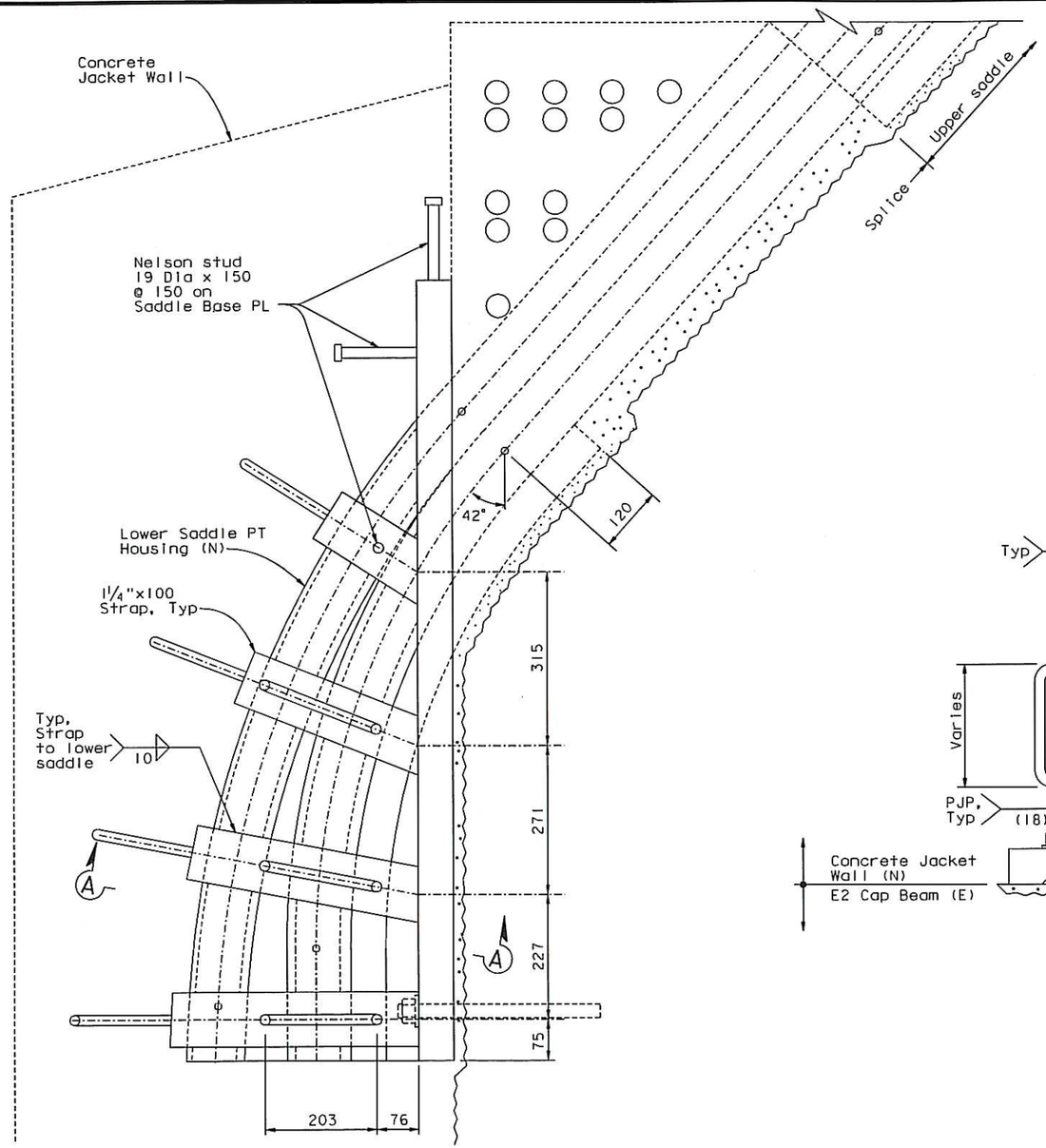

LOWER SADDLE ELEVATION
1:5

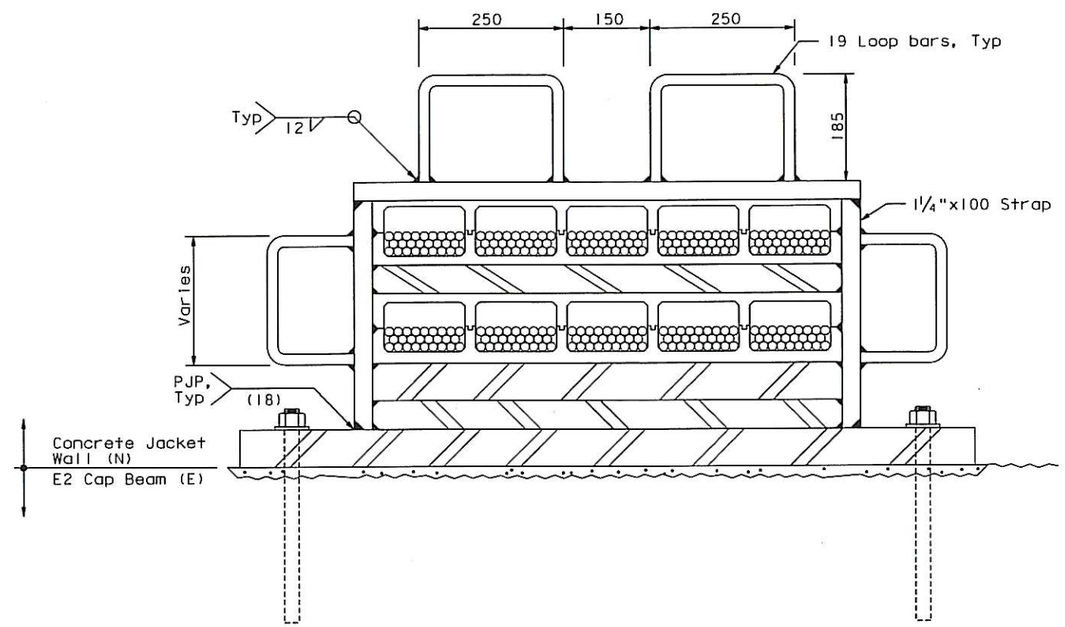

SECTION A-A
1:5

CONTRACT CHANGE ORDER NO. 331
SHEET 12 OF 36

REQUESTS FOR INFORMATION NOT ADDRESSED IN THIS CCO REMAIN IN FORCE

ALL DIMENSIONS ARE IN MILLIMETERS UNLESS OTHERWISE SHOWN

A. Akinsanya / W. Long
DESIGN OVERSIGHT
SIGN OFF DATE 07/01/13

MARK	DATE	DESCRIPTIONS	BY	CH'D	CCO#
0	07/01/13	PIER E2 PLANS	AS	MN	331

REVISIONS

DESIGN	BY A. Sanjines	CHECKED S. Rodriguez	
DETAILS	BY J. Denis	CHECKED G. Baker	
QUANTITIES	BY N. Vo	CHECKED J. Grove	

PREPARED FOR THE STATE OF CALIFORNIA DEPARTMENT OF TRANSPORTATION

M. Nader
PROJECT ENGINEER

BRIDGE NO. 34-0006L/R
KILOMETER POST 13.2/13.9

CU 04
EA 0120F1

SAN FRANCISCO OAKLAND BAY BRIDGE
EAST SPAN SEISMIC SAFETY PROJECT
SELF-ANCHORED SUSPENSION BRIDGE
(SUPERSTRUCTURE & TOWER)

S1 & S2 NEW DESIGN: SADDLE DETAILS NO. 4

SHEET 102S7 OF

DISREGARD PRINTS BEARING EARLIER REVISION DATES 07/01/13

REVISION DATES (PRELIMINARY STAGE ONLY)

Rev. Date: 5-22-13

ORIGINAL SCALE IN MILLIMETERS FOR REDUCED PLANS 0 10 20 30 40 50 60 70 80 90 100

FILE => I:\bb\04-0120F1\sas\contract plans and cco\cco\cco#331\1-original 07-01-13\dgn\aep1r17.dgn

100 % PS&E

USERNAME => PHUA DATE PLOTTED => 03 JUL 2013 TIME PLOTTED => 14:35:38

DIST.	COUNTY	ROUTE	KILOMETER POST TOTAL PROJECT	SHEET NO.	TOTAL SHEETS
04	SF	80	13.2/13.9	51958	1204

REGISTERED ENGINEER - CIVIL

07-01-13

PLANS APPROVAL DATE

The State of California or its officers or agents shall not be responsible for the accuracy or completeness of electronic copies of this plan sheet.

REGISTERED PROFESSIONAL ENGINEER Marwan N. Nader No. C 054426 Exp. 12/31/13 CIVIL STATE OF CALIFORNIA

T.Y. LIN / MOFFATT & NICHOL
825 BATTERY STREET
SAN FRANCISCO, CA 94111

Caltrans now has a web site! To get to the web site, go to: http://www.dot.ca.gov

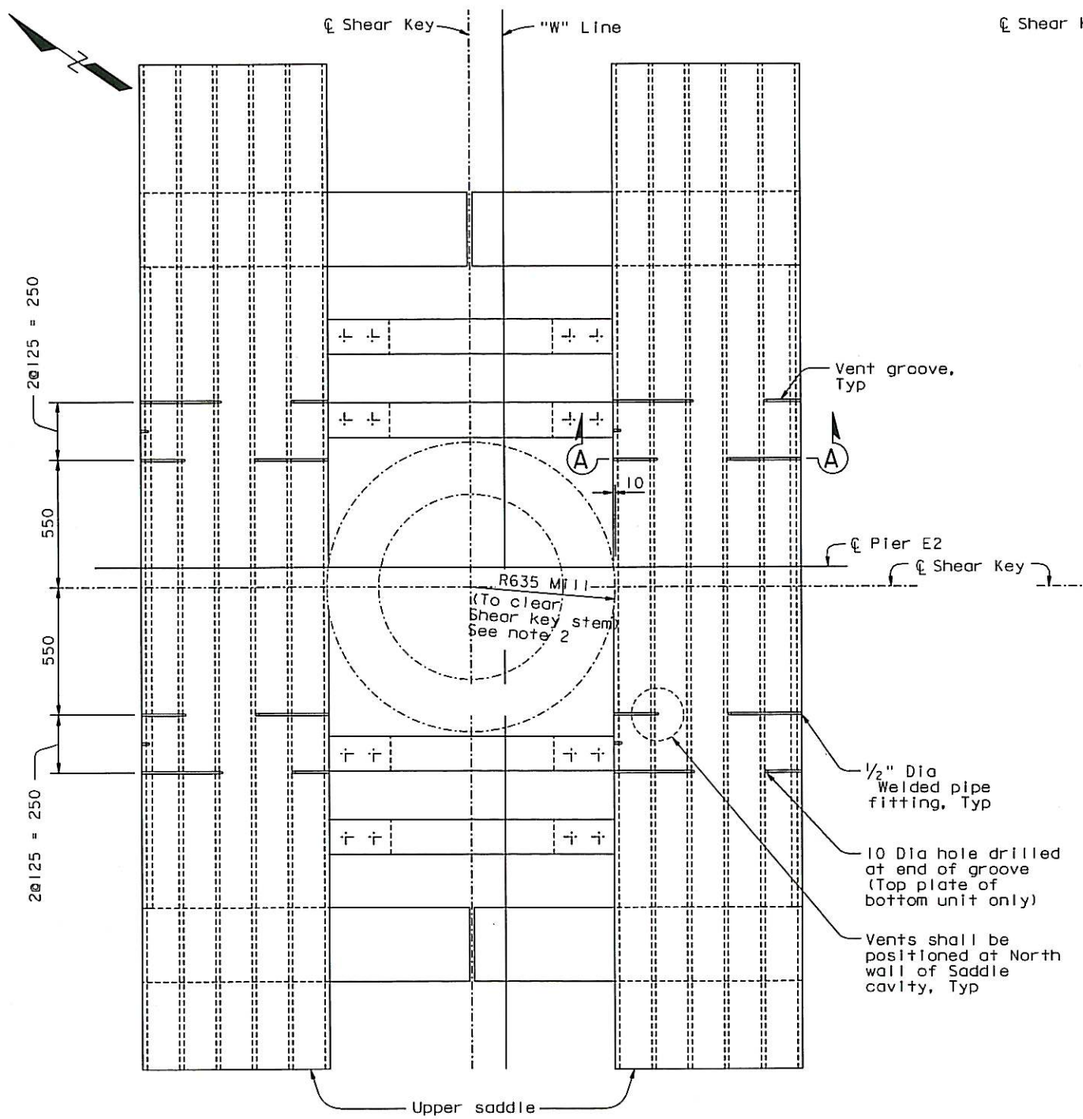

KEY PLAN - UPPER SADDLE VENT GROOVE

1:12.5

(Layer A Venting)
("W" Line Saddle shown)

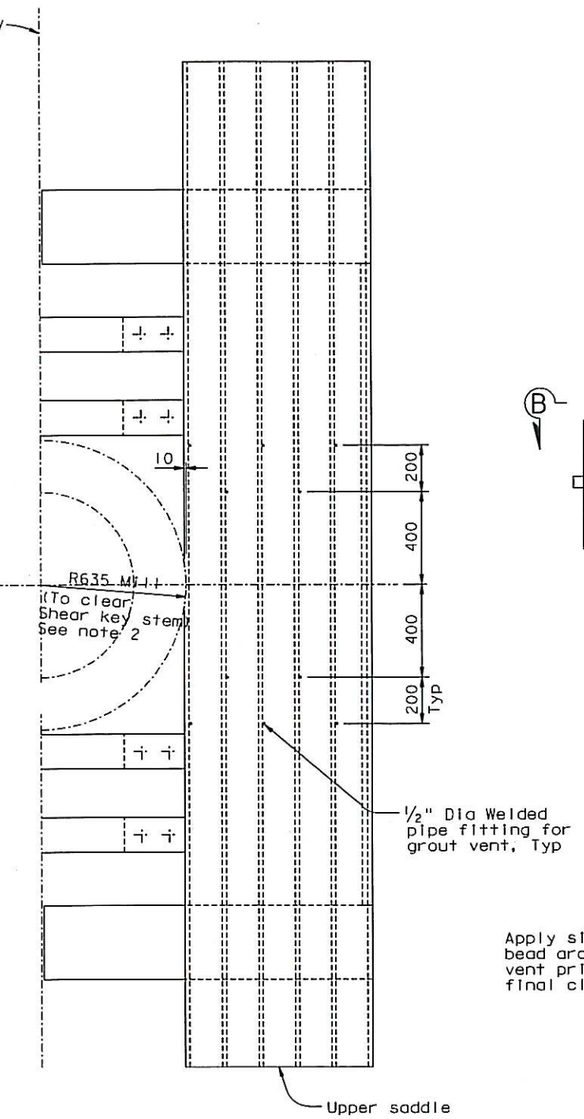

SECTION B-B

1:12.5

(Layer B Venting)

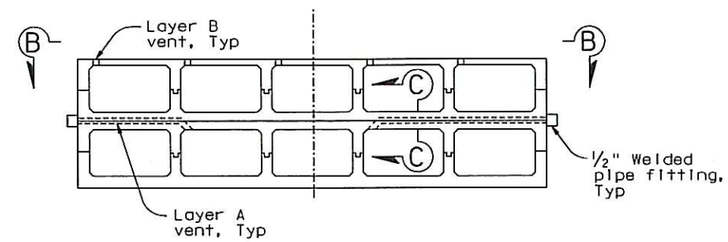

SECTION A-A

1:5

(Assembly Bolts Not Shown)

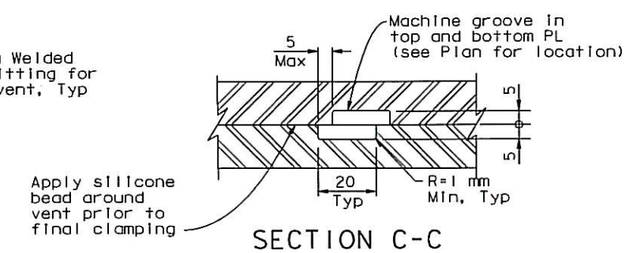

SECTION C-C

1:1

NOTES:

1. Vent grooves, keys and tapped holes show one possible method; contactor to define per their means & methods.
2. Mill assembly after completing welding. Seal weld as needed. Grind flush.

CONTRACT CHANGE ORDER NO. 331
SHEET 13 OF 36

REQUESTS FOR INFORMATION NOT ADDRESSED IN THIS CCO REMAIN IN FORCE

UPPER SADDLE DETAILS

ALL DIMENSIONS ARE IN MILLIMETERS UNLESS OTHERWISE SHOWN

MARK	DATE	DESCRIPTIONS	BY	CH'D	CCO#
0	07/01/13	PIER E2 PLANS	AS	MN	331

REVISIONS

A. Akinsanya / W. Long
DESIGN OVERSIGHT
SIGN OFF DATE 07/01/13

DESIGN BY A. Sanjines CHECKED S. Rodriguez
DETAILS BY J. Denis CHECKED G. Baker
QUANTITIES BY N. Vo CHECKED J. Grove

PREPARED FOR THE STATE OF CALIFORNIA DEPARTMENT OF TRANSPORTATION

M. Nader
PROJECT ENGINEER

BRIDGE NO. 34-0006L/R
KILOMETER POST 13.2/13.9

SAN FRANCISCO OAKLAND BAY BRIDGE
EAST SPAN SEISMIC SAFETY PROJECT
SELF-ANCHORED SUSPENSION BRIDGE
(SUPERSTRUCTURE & TOWER)

S1 & S2 NEW DESIGN: SADDLE DETAILS NO.5

Rev. Date: 5-22-13

ORIGINAL SCALE IN MILLIMETERS FOR REDUCED PLANS 0 10 20 30 40 50 60 70 80 90 100

CU 04
EA 0120F1

DISREGARD PRINTS BEARING EARLIER REVISION DATES 07/01/13

REVISION DATES (PRELIMINARY STAGE ONLY)

SHEET 102S8 OF

FILE => L:\BB\04-012001\SAS\Contract Plans and CCO\CCO\CCO#331\1-Original 07-01-13\DGN\aeplr18.dgn

100 % PS&E

USERNAME => crivera DATE PLOTTED => 03 JUL 2013 TIME PLOTTED => 16:42:45

DIST.	COUNTY	ROUTE	KILOMETER POST TOTAL PROJECT	SHEET NO.	TOTAL SHEETS
04	SF	80	13.2/13.9	51959	1204

REGISTERED ENGINEER - CIVIL

07-01-13

PLANS APPROVAL DATE

REGISTERED PROFESSIONAL ENGINEER Marwan N. Nader No. C 054426 Exp. 12/31/13 CIVIL STATE OF CALIFORNIA

The State of California or its officers or agents shall not be responsible for the accuracy or completeness of electronic copies of this plan sheet.

T.Y. LIN / MOFFATT & NICHOL
825 BATTERY STREET
SAN FRANCISCO, CA 94111

Caltrans now has a web site! To get to the web site, go to: http://www.dot.ca.gov

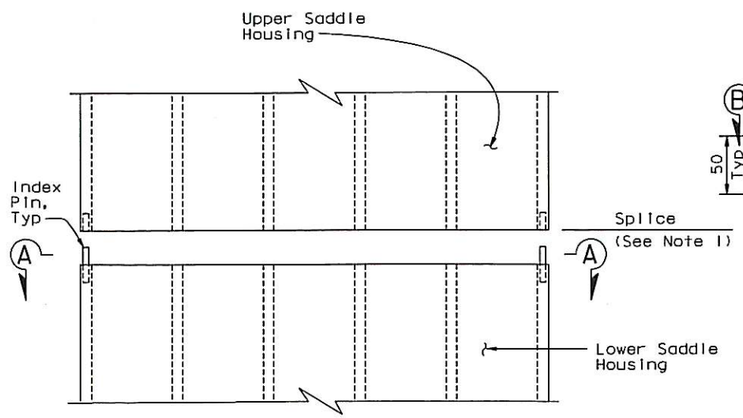

SADDLE SPLICE - PLAN
1:5

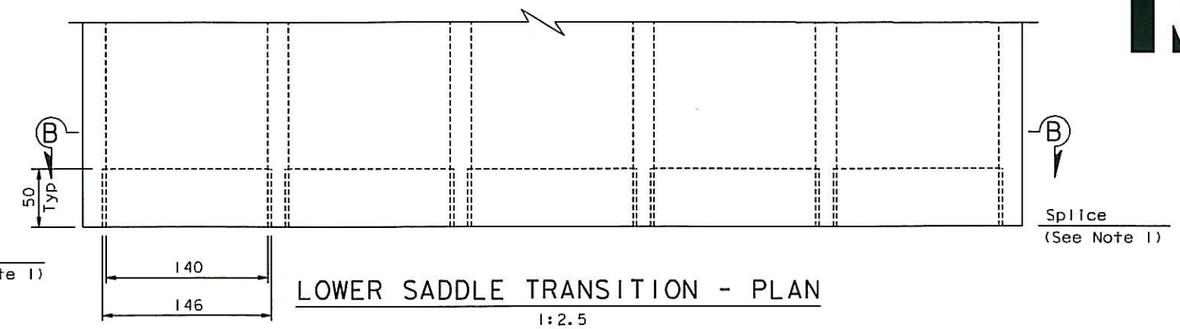

LOWER SADDLE TRANSITION - PLAN
1:2.5

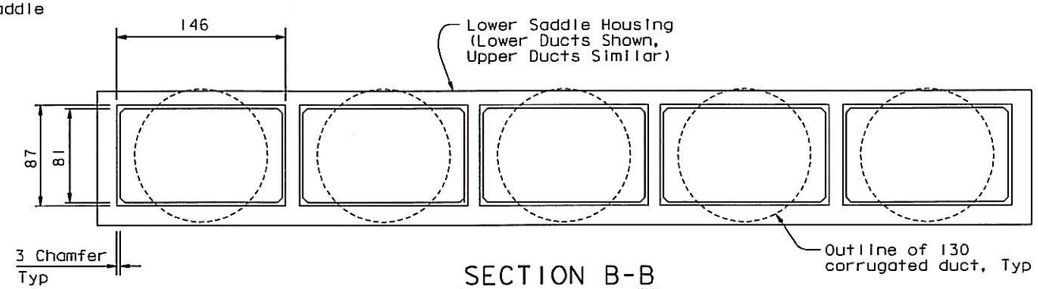

SECTION B-B
1:2.5

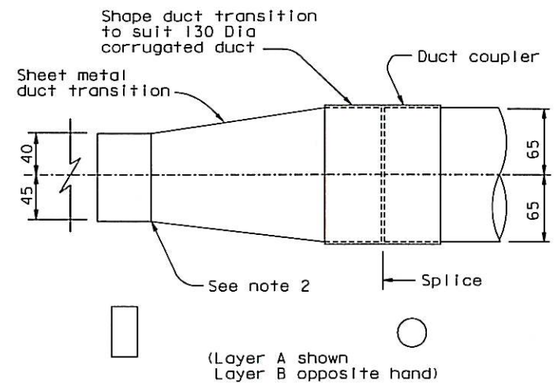

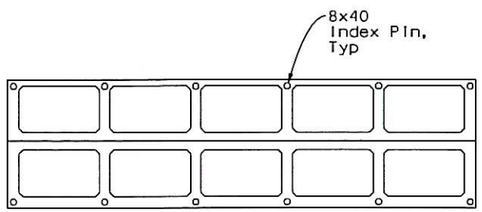

SECTION A-A
1:5

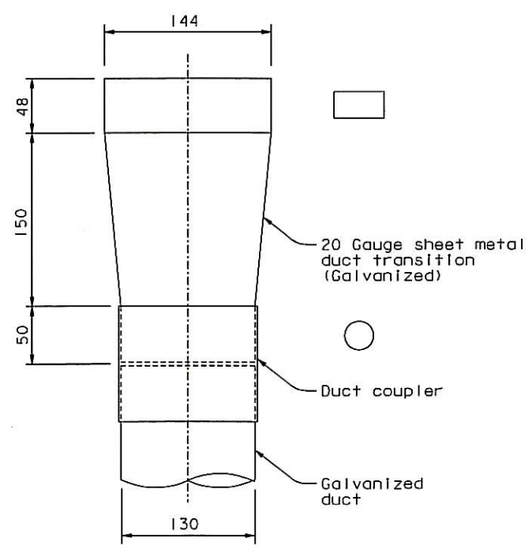

BOTTOM SADDLE DUCT TRANSITION
1:2.5

NOTES:

1. Contractor to design splice details to prevent concrete ingress and grout leakage between layers.
2. Shape duct transition to suit lower saddle chamfers.

CONTRACT CHANGE ORDER NO. 331
SHEET 14 OF 36

REQUESTS FOR INFORMATION NOT ADDRESSED IN THIS CCO REMAIN IN FORCE

ALL DIMENSIONS ARE IN MILLIMETERS UNLESS OTHERWISE SHOWN

A. Akinsanya / W. Long
DESIGN OVERSIGHT
SIGN OFF DATE 07/01/13

MARK	DATE	DESCRIPTIONS	BY	CH'D	CCO#
0	07/01/13	PIER E2 PLANS	AS	MN	331

REVISIONS

DESIGN	BY A. Sanjines	CHECKED	S. Rodriguez
DETAILS	BY J. Denis	CHECKED	G. Baker
QUANTITIES	BY N. Vo	CHECKED	J. Grove

PREPARED FOR THE STATE OF CALIFORNIA DEPARTMENT OF TRANSPORTATION

M. Nader
PROJECT ENGINEER

BRIDGE NO. 34-0006L/R
KILOMETER POST 13.2/13.9

SAN FRANCISCO OAKLAND BAY BRIDGE
EAST SPAN SEISMIC SAFETY PROJECT
SELF-ANCHORED SUSPENSION BRIDGE
(SUPERSTRUCTURE & TOWER)

S1 & S2 NEW DESIGN: SADDLE DETAILS NO.6

Rev. Date: 5-22-13

ORIGINAL SCALE IN MILLIMETERS FOR REDUCED PLANS 0 10 20 30 40 50 60 70 80 90 100

CU 04
EA 0120F1

DISREGARD PRINTS BEARING EARLIER REVISION DATES 07/01/13

REVISION DATES (PRELIMINARY STAGE ONLY)

SHEET 1029 OF

FILE => L:\BB\04-012001\SAS\Contract Plans and CCO\CCO\CCO#331\1-Original 07-01-13\DGN\aeplr19.dgn

100 % PS&E

USERNAME => arivera DATE PLOTTED => 03 JUL 2013 TIME PLOTTED => 16:44:39

DIST.	COUNTY	ROUTE	KILOMETER POST TOTAL PROJECT	SHEET NO.	TOTAL SHEETS
04	SF	80	13.2/13.9	519S10	1204

REGISTERED ENGINEER - CIVIL

07-01-13

PLANS APPROVAL DATE

The State of California or its officers or agents shall not be responsible for the accuracy or completeness of electronic copies of this plan sheet.

REGISTERED PROFESSIONAL ENGINEER Marwan N. Nader No. C 054426 Exp. 12/31/13 CIVIL STATE OF CALIFORNIA

T.Y. LIN / MOFFATT & NICHOL
825 BATTERY STREET
SAN FRANCISCO, CA 94111

Caltrans now has a web site! To get to the web site, go to: http://www.dot.ca.gov

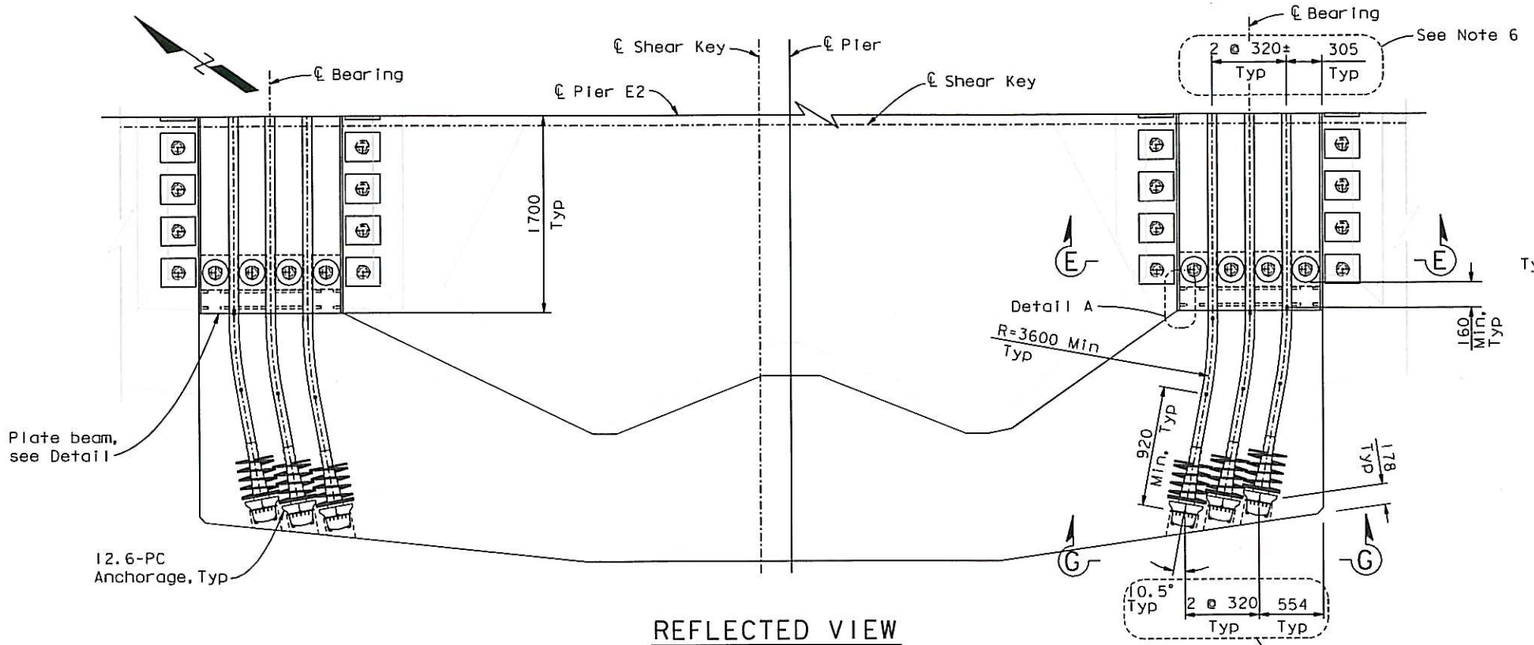

REFLECTED VIEW

1:25

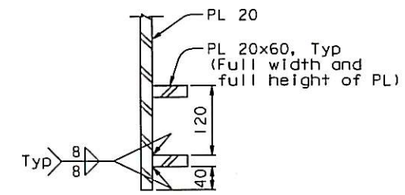

(PLATE BEAM END "KEYS")

DETAIL A

1:5

NOTE:
Typical keys for vertical and horizontal steel plates.

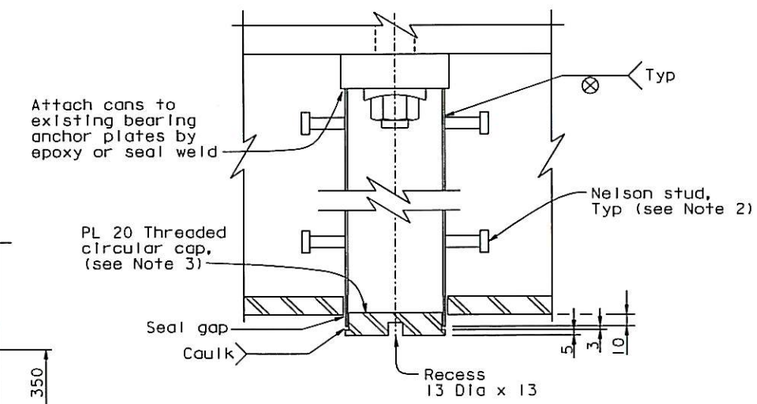

BEARING ANCHOR ROD CAN DETAIL

1:5

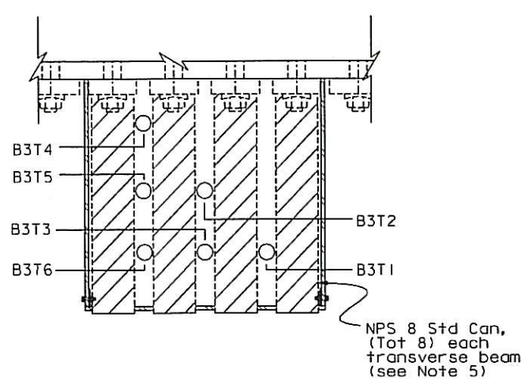

SECTION E-E

1:15

("B#" of Transverse Tendon name refers to Bearing number. Tendons at Bearing B3 Shown; Others Similar)

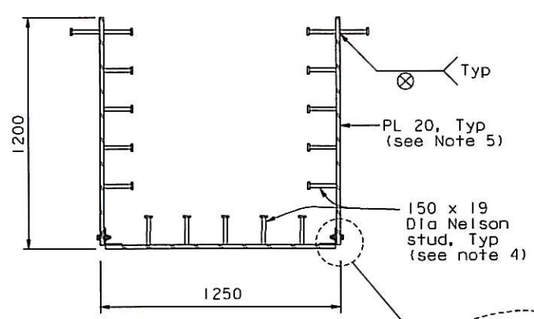

PLATE BEAM DETAIL

1:15

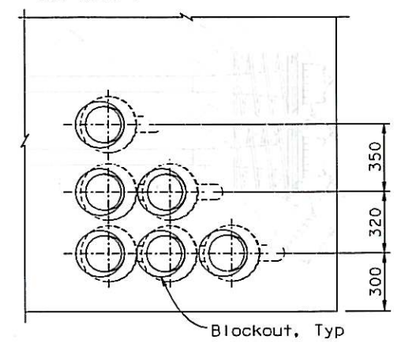

VIEW G-G

1:15

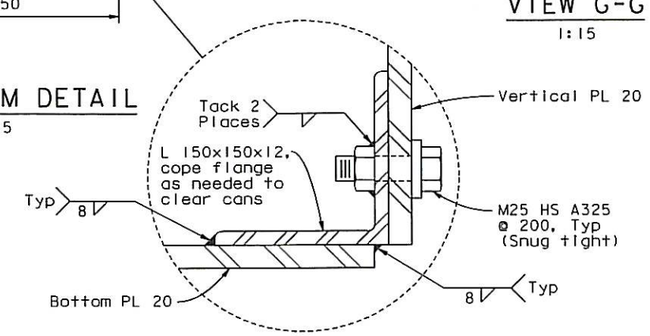

NOTES:

1. Site conditions may require corrugated duct to be deformed locally by ≤ 4mm each side of duct.
2. Six sets of four 75mm 10 Dia Nelson studs shall be placed radially staggered along length of NPS pipes.
3. The threaded cap shall be supplied with two recesses spaced apart such that the cap can be installed with the aid of a spanner wrench. The recesses shall not penetrate the plate. Threads shall follow ANSI standards.
4. Nelson studs shall be spaced at 200 each way on all interior faces of box (stagger placement on sides and bottom). On exterior, place studs at 360; locate between bearing anchor bolts.
5. Steel pipes shall be galvanized. Steel plates shall be primed in shop.
6. Dimensions may be adjusted to account for as built locations of bearing anchor rods.

CONTRACT CHANGE ORDER NO. 331
SHEET 15 OF 36

REQUESTS FOR INFORMATION NOT ADDRESSED IN THIS CCO REMAIN IN FORCE

ALL DIMENSIONS ARE IN MILLIMETERS UNLESS OTHERWISE SHOWN

MARK	DATE	DESCRIPTIONS	BY	CH'D	CCO#
0	07/01/13	PIER E2 PLANS	AS	MN	331

REVISIONS

A. Akinsanya / W. Long
DESIGN OVERSIGHT
SIGN OFF DATE 07/01/13

Rev. Date: 5-22-13

DESIGN BY A. Sanjines CHECKED S. Rodriguez
DETAILS BY C. Hovell CHECKED H. Patel
QUANTITIES BY N. Vo CHECKED J. Grove

PREPARED FOR THE STATE OF CALIFORNIA DEPARTMENT OF TRANSPORTATION

M. Nader
PROJECT ENGINEER

BRIDGE NO. 34-0006L/R
KILOMETER POST 13.2/13.9

CU 04
EA 0120F1

ORIGINAL SCALE IN MILLIMETERS FOR REDUCED PLANS 0 10 20 30 40 50 60 70 80 90 100

DISREGARD PRINTS BEARING EARLIER REVISION DATES 07/01/13

REVISION DATES (PRELIMINARY STAGE ONLY)

SHEET 102S10 OF

SAN FRANCISCO OAKLAND BAY BRIDGE
EAST SPAN SEISMIC SAFETY PROJECT
SELF-ANCHORED SUSPENSION BRIDGE
(SUPERSTRUCTURE & TOWER)

S1 & S2 NEW DESIGN: P.T. DETAILS NO. 1

FILE => L:\BB\04-012001\SAS\Contract Plans and CCO\CCO\CCO#331\1-Original 07-01-13\DGN\aeplr20.dgn

USERNAME => grivera DATE PLOTTED => 03 JUL 2013 TIME PLOTTED => 16:56:13

100 % PS&E

DIST.	COUNTY	ROUTE	KILOMETER POST TOTAL PROJECT	SHEET NO.	TOTAL SHEETS
04	SF	80	13.2/13.9	519511	1204

REGISTERED ENGINEER - CIVIL

07-01-13

PLANS APPROVAL DATE

REGISTERED PROFESSIONAL ENGINEER Marwan N. Nader No. C 054426 Exp. 12/31/13 CIVIL STATE OF CALIFORNIA

The State of California or its officers or agents shall not be responsible for the accuracy or completeness of electronic copies of this plan sheet.

T.Y. LIN / MOFFATT & NICHOL
825 BATTERY STREET
SAN FRANCISCO, CA 94111

Caltrans now has a web site! To get to the web site, go to: http://www.dot.ca.gov

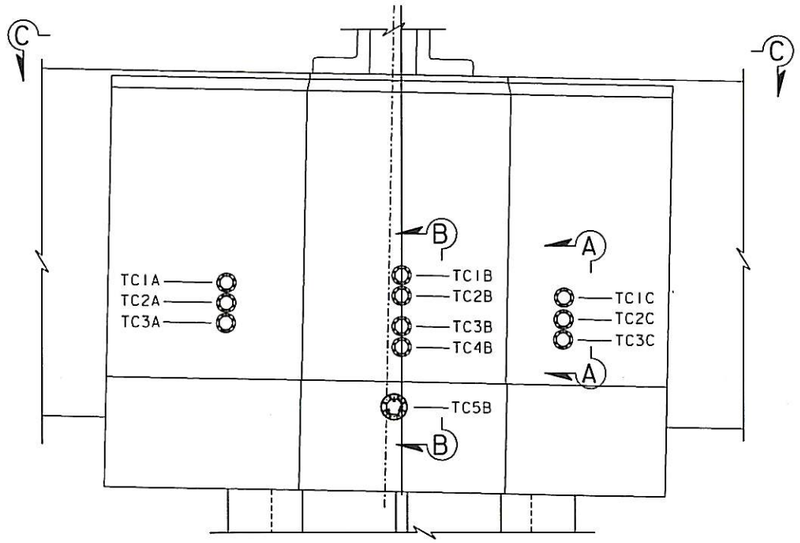

TENDON ID'S

1:50

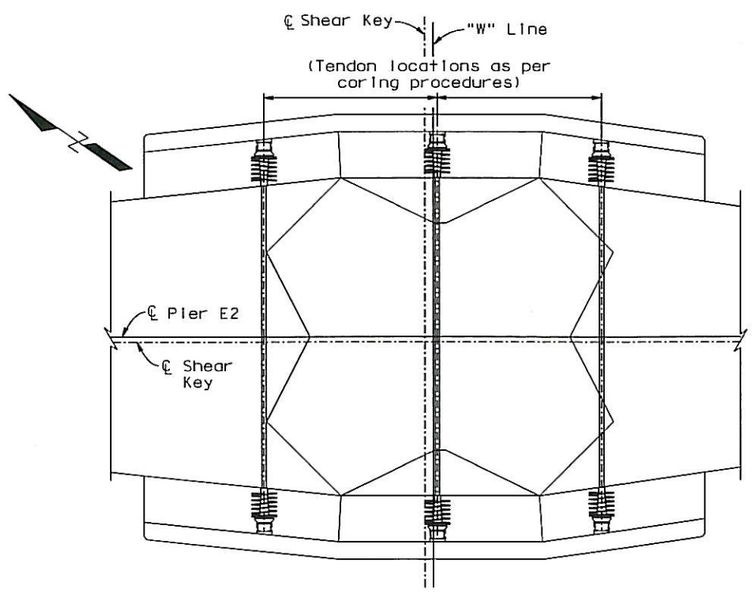

PLAN VIEW C-C

1:50

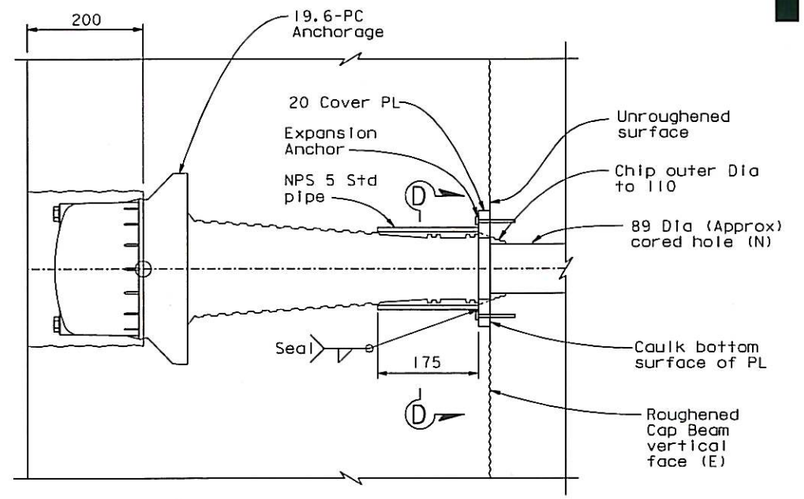

PARTIAL SECTION A-A

1:5

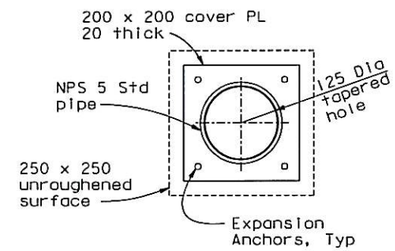

SECTION D-D

1:5

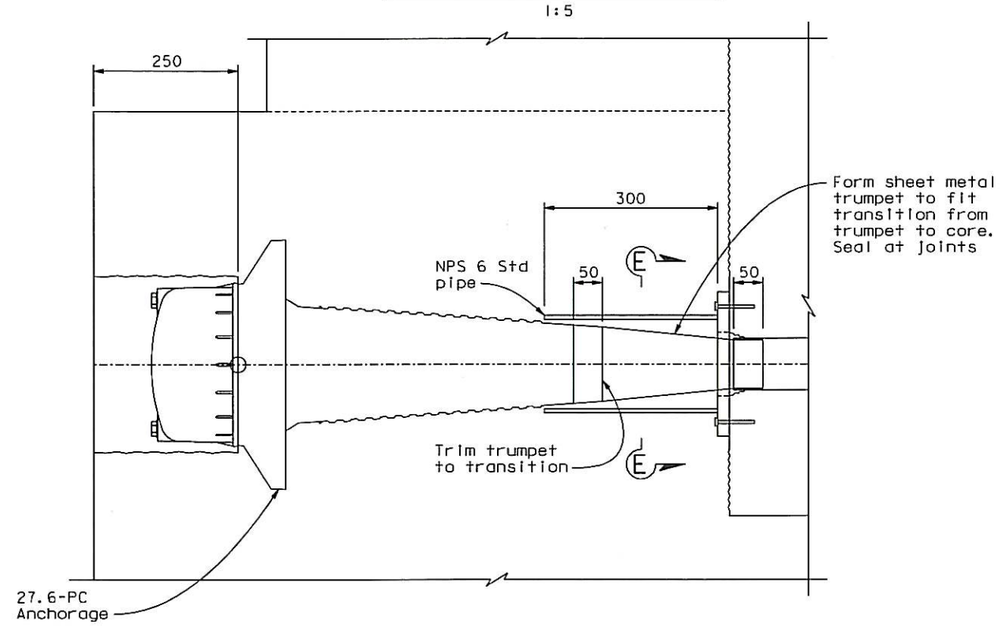

PARTIAL SECTION B-B

1:5

(See Partial Section A-A for connection details not shown)

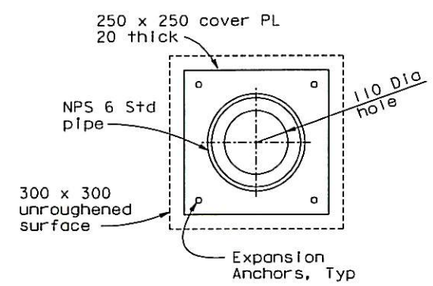

SECTION E-E

1:5

CONTRACT CHANGE ORDER NO. 331
SHEET 16 OF 36

REQUESTS FOR INFORMATION NOT ADDRESSED IN THIS CCO REMAIN IN FORCE

ALL DIMENSIONS ARE IN MILLIMETERS UNLESS OTHERWISE SHOWN

MARK	DATE	DESCRIPTIONS	BY	CH'D	CCO#
0	07/01/13	PIER E2 PLANS	AS	MN	331

REVISIONS

A. Akinsanya / W. Long
DESIGN OVERSIGHT
SIGN OFF DATE 07/01/13

DESIGN	BY A. Sanjines	CHECKED	S. Rodriguez
DETAILS	BY C. Hovell	CHECKED	H. Patel
QUANTITIES	BY N. Vo	CHECKED	J. Grove

PREPARED FOR THE STATE OF CALIFORNIA DEPARTMENT OF TRANSPORTATION

M. Nader
PROJECT ENGINEER

BRIDGE NO. 34-0006L/R
KILOMETER POST 13.2/13.9

SAN FRANCISCO OAKLAND BAY BRIDGE
EAST SPAN SEISMIC SAFETY PROJECT
SELF-ANCHORED SUSPENSION BRIDGE
(SUPERSTRUCTURE & TOWER)

S1 & S2 NEW DESIGN: P.T. DETAILS NO. 2

Rev. Date: 5-22-13

ORIGINAL SCALE IN MILLIMETERS FOR REDUCED PLANS 0 10 20 30 40 50 60 70 80 90 100

CU 04
EA 0120F1

DISREGARD PRINTS BEARING EARLIER REVISION DATES 07/01/13

REVISION DATES (PRELIMINARY STAGE ONLY)

SHEET 102511 OF

FILE => I:\bb\04-012001\sas\contract plans and cco\cco\cco#331\1-original 07-01-13\dgn\aeplr21.dgn

100 % PS&E

USERNAME => PHua DATE PLOTTED => 03 JUL 2013 TIME PLOTTED => 14:37:41

DIST.	COUNTY	ROUTE	KILOMETER POST TOTAL PROJECT	SHEET NO.	TOTAL SHEETS
04	SF	80	13.2/13.9	519512	1204

REGISTERED ENGINEER - CIVIL

07-01-13

PLANS APPROVAL DATE

REGISTERED PROFESSIONAL ENGINEER Marwan N. Nader No. C 054426 Exp. 12/31/13 CIVIL STATE OF CALIFORNIA

The State of California or its officers or agents shall not be responsible for the accuracy or completeness of electronic copies of this plan sheet.

T.Y. LIN / MOFFATT & NICHOL
825 BATTERY STREET
SAN FRANCISCO, CA 94111

Caltrans now has a web site! To get to the web site, go to: http://www.dot.ca.gov

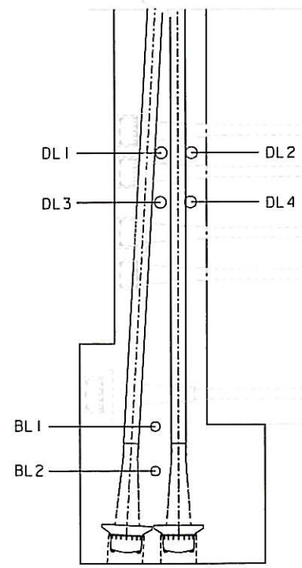

SECTION B-B
1:25

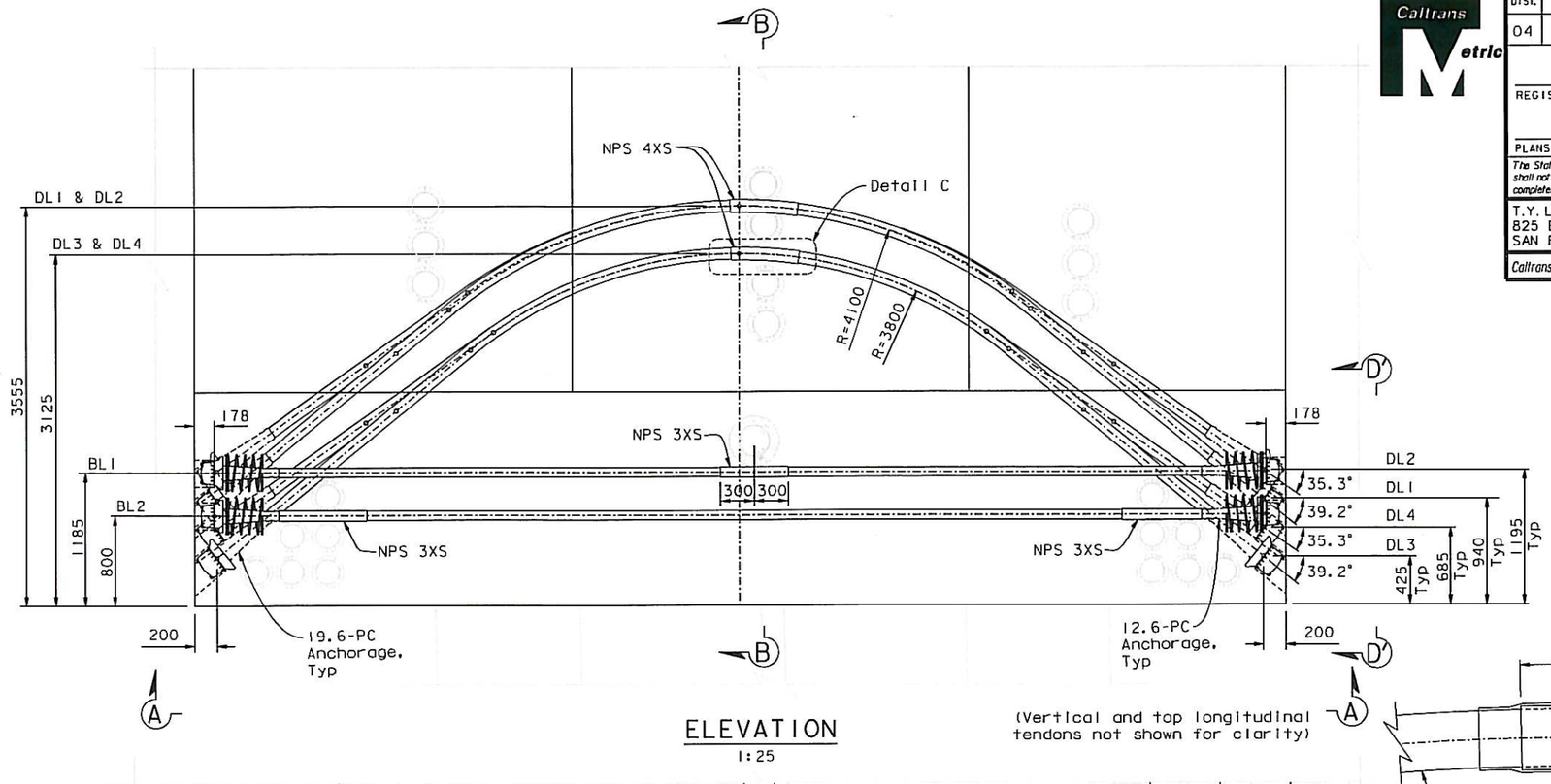

ELEVATION
1:25

(Vertical and top longitudinal tendons not shown for clarity)

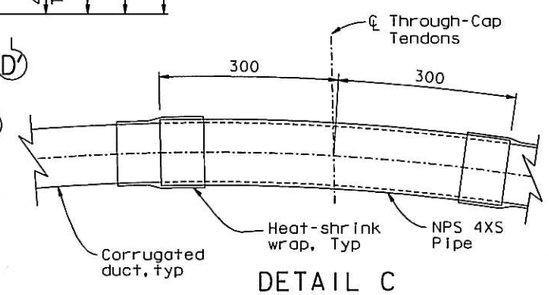

DETAIL C
1:5

(Draped tendons shown, others similar)

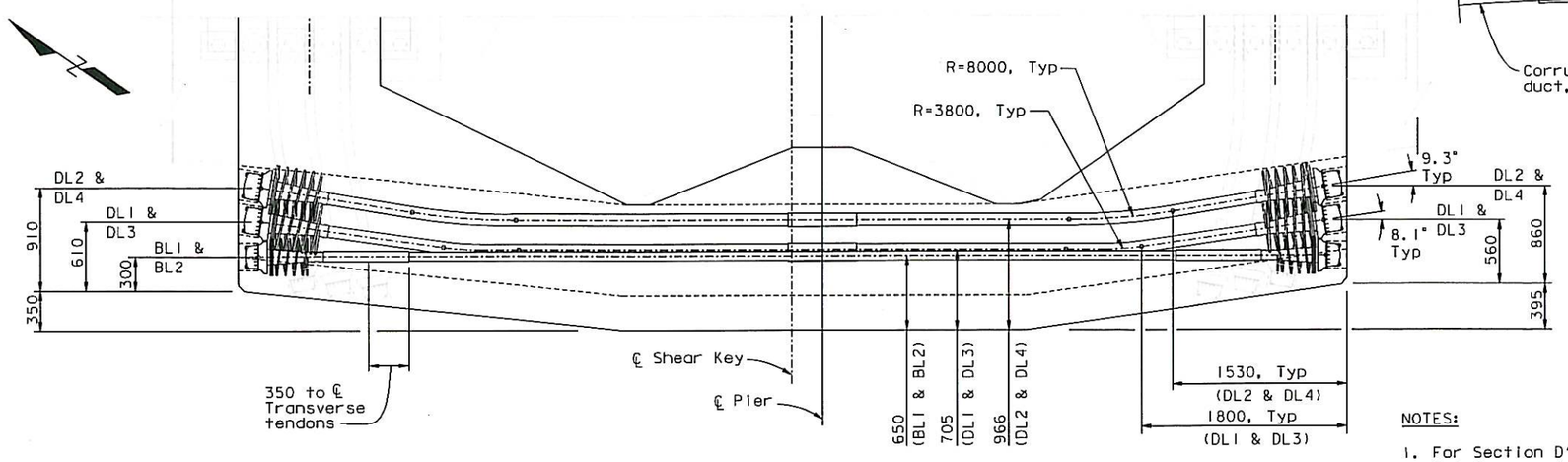

REFLECTED VIEW A-A
1:25

NOTES:

1. For Section D'-D', see "S1 & S2 New Design: Reinforcement Details No.2" sheet.
2. Draped Tendons shall have grout vents at the high point of the tendon.

CONTRACT CHANGE ORDER NO. 331
SHEET 17 OF 36

REQUESTS FOR INFORMATION NOT ADDRESSED IN THIS CCO REMAIN IN FORCE

BOTTOM & DRAPED LONGITUDINAL TENDON LAYOUT

ALL DIMENSIONS ARE IN MILLIMETERS UNLESS OTHERWISE SHOWN

A. Akinsanya / W. Long
DESIGN OVERSIGHT
SIGN OFF DATE 07/01/13

MARK	DATE	DESCRIPTIONS	BY	CH'D	CCO#
0	07/01/13	PIER E2 PLANS	AS	MN	331

REVISIONS

DESIGN	BY A. Sanjines	CHECKED S. Rodriguez	
DETAILS	BY C. Hovell	CHECKED H. Patel	
QUANTITIES	BY N. Vo	CHECKED J. Grove	

PREPARED FOR THE STATE OF CALIFORNIA DEPARTMENT OF TRANSPORTATION

M. Nader
PROJECT ENGINEER

BRIDGE NO. 34-0006L/R
KILOMETER POST 13.2/13.9

SAN FRANCISCO OAKLAND BAY BRIDGE
EAST SPAN SEISMIC SAFETY PROJECT
SELF-ANCHORED SUSPENSION BRIDGE
(SUPERSTRUCTURE & TOWER)

S1 & S2 NEW DESIGN: P.T. DETAILS NO.3

Rev. Date: 5-22-13

ORIGINAL SCALE IN MILLIMETERS FOR REDUCED PLANS 0 10 20 30 40 50 60 70 80 90 100

CU 04
EA 0120F1

DISREGARD PRINTS BEARING EARLIER REVISION DATES 07/01/13

REVISION DATES (PRELIMINARY STAGE ONLY)

SHEET 102512 OF

FILE => L:\BB\04-012001\SAS\Contract Plans and CCO\CCO\CCO=331\1-Original 07-01-13\DGN\aeplr22.dgn

100 % PS&E

USERNAME => grivera DATE PLOTTED => 03 JUL 2013 TIME PLOTTED => 17:02:43

DIST.	COUNTY	ROUTE	KILOMETER POST TOTAL PROJECT	SHEET NO.	TOTAL SHEETS
04	SF	80	13.2/13.9	519513	1204

REGISTERED ENGINEER - CIVIL

07-01-13

PLANS APPROVAL DATE

PROFESSIONAL ENGINEER — Marwan N. Nader — No. C 054426 — Exp. 12/31/13 — CIVIL — STATE OF CALIFORNIA

The State of California or its officers or agents shall not be responsible for the accuracy or completeness of electronic copies of this plan sheet.

T.Y. LIN / MOFFATT & NICHOL
825 BATTERY STREET
SAN FRANCISCO, CA 94111

Caltrans now has a web site! To get to the web site, go to: http://www.dot.ca.gov

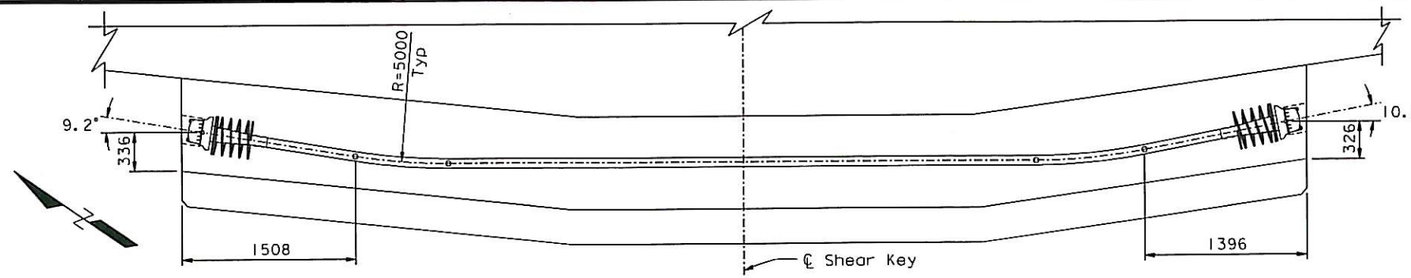

VIEW A-A
1:25

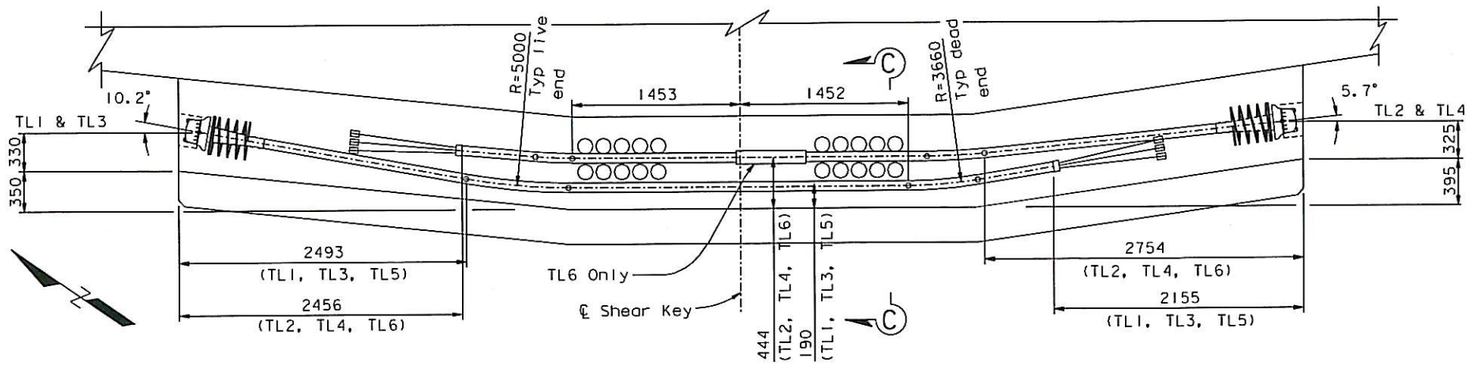

VIEW B-B
1:25

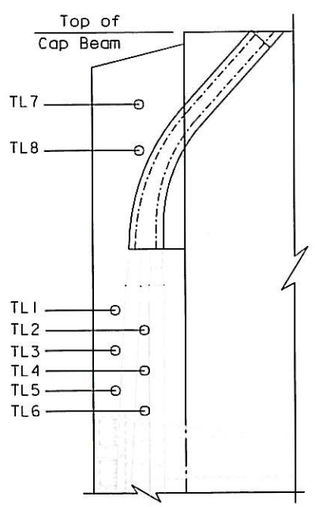

SECTION C-C
1:25

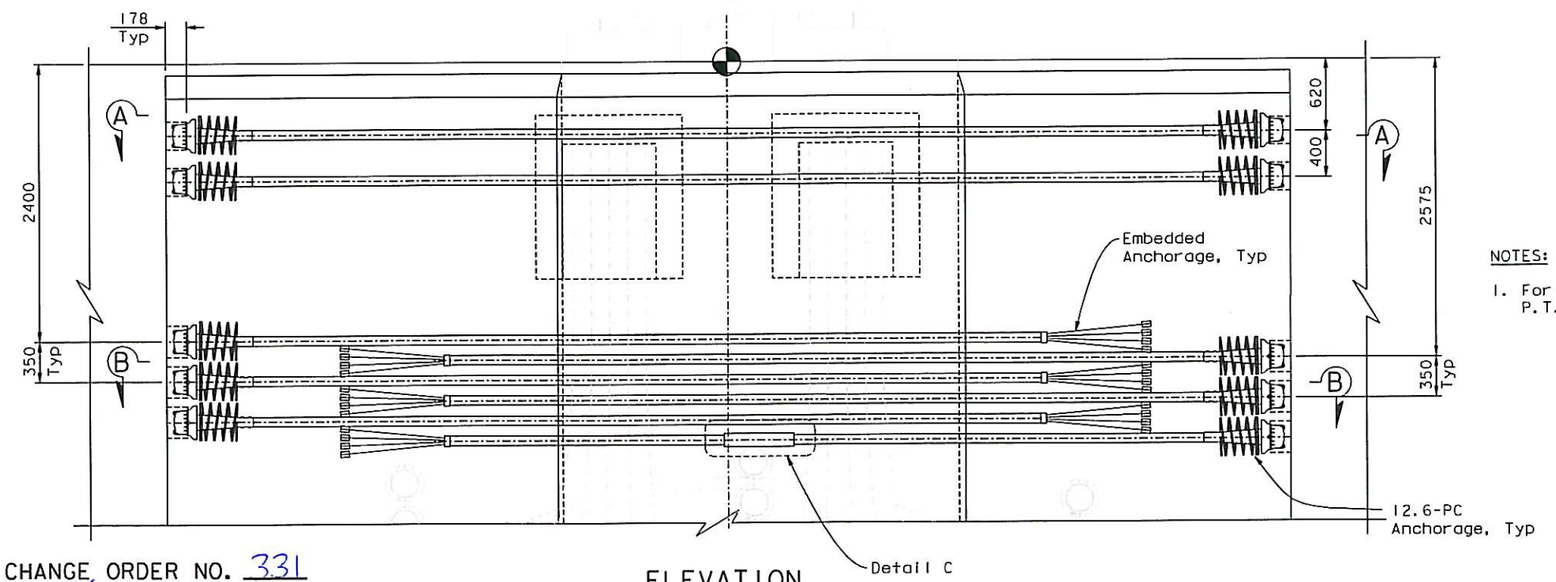

ELEVATION
1:25

NOTES:

1. For Detail C, see "S1 & S2 New Design: P.T. Details No.3" sheet.

TOP LONGITUDINAL TENDON LAYOUT

CONTRACT CHANGE ORDER NO. 331
SHEET 18 OF 36

REQUESTS FOR INFORMATION NOT ADDRESSED IN THIS CCO REMAIN IN FORCE

ALL DIMENSIONS ARE IN MILLIMETERS UNLESS OTHERWISE SHOWN

A. Akinsanya / W. Long
DESIGN OVERSIGHT
SIGN OFF DATE 07/01/13

Rev. Date: 5-22-13

MARK	DATE	DESCRIPTIONS	BY	CH'D	CCO#
0	07/01/13	PIER E2 PLANS	AS	MN	331

REVISIONS

DESIGN	BY A. Sanjines	CHECKED S. Rodriguez	
DETAILS	BY C. Hovell	CHECKED H. Patel	
QUANTITIES	BY N. Vo	CHECKED J. Grove	

PREPARED FOR THE STATE OF CALIFORNIA DEPARTMENT OF TRANSPORTATION

M. Nader
PROJECT ENGINEER

BRIDGE NO. 34-0006L/R
KILOMETER POST 13.2/13.9

CU 04
EA 0120F1

ORIGINAL SCALE IN MILLIMETERS FOR REDUCED PLANS 0 10 20 30 40 50 60 70 80 90 100

DISREGARD PRINTS BEARING EARLIER REVISION DATES 07/01/13

REVISION DATES (PRELIMINARY STAGE ONLY)

SAN FRANCISCO OAKLAND BAY BRIDGE
EAST SPAN SEISMIC SAFETY PROJECT
SELF-ANCHORED SUSPENSION BRIDGE
(SUPERSTRUCTURE & TOWER)

S1 & S2 NEW DESIGN: P.T. DETAILS NO.4

SHEET 102513 OF

100 % PS&E

USERNAME => msmith DATE PLOTTED => 03 JUL 2013 TIME PLOTTED => 14:41:54

FILE => I:\bb\04-012001\sas\contract plans and cco\cco\cco#331\1-original 07-01-13\dgn\aeptr23.dgn

DIST.	COUNTY	ROUTE	KILOMETER POST TOTAL PROJECT	SHEET NO.	TOTAL SHEETS
04	SF	80	13.2/13.9	519514	1204

REGISTERED ENGINEER - CIVIL

07-01-13

PLANS APPROVAL DATE

REGISTERED PROFESSIONAL ENGINEER Marwan N. Nader No. C 054426 Exp. 12/31/13 CIVIL STATE OF CALIFORNIA

The State of California or its officers or agents shall not be responsible for the accuracy or completeness of electronic copies of this plan sheet.

T.Y. LIN / MOFFATT & NICHOL
825 BATTERY STREET
SAN FRANCISCO, CA 94111

Caltrans now has a web site! To get to the web site, go to: http://www.dot.ca.gov

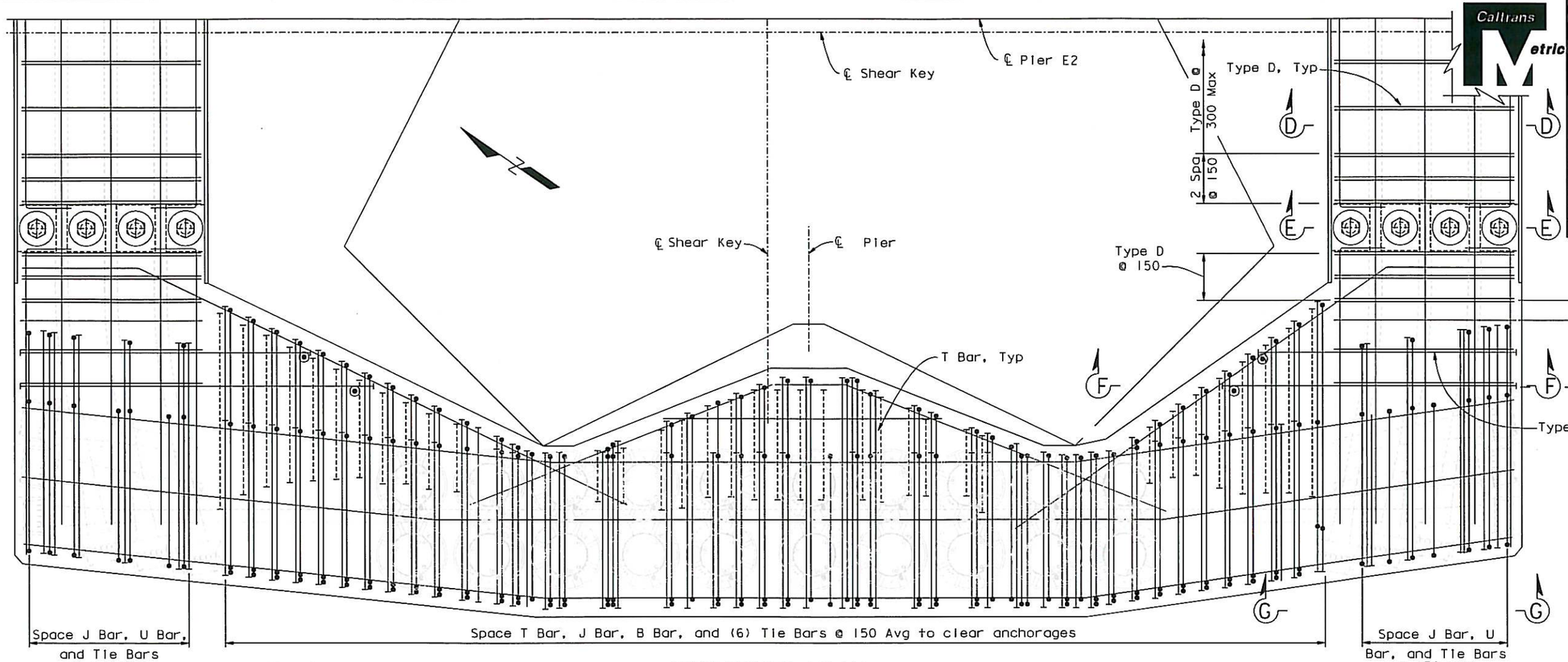

REFLECTED PLAN
1:15

NOTES:

1. For Sections A'-A', B'-B', E'-E', and View D', see "S1 & S2 New Design: Reinforcement Details No.2" sheet.
2. For Sections D-D and F-F, see "S1 & S2 New Design: Reinforcement Details No.3" sheet.
3. For Section E-E, see "S1 & S2 New Design: P.T. Details No.1" sheet.

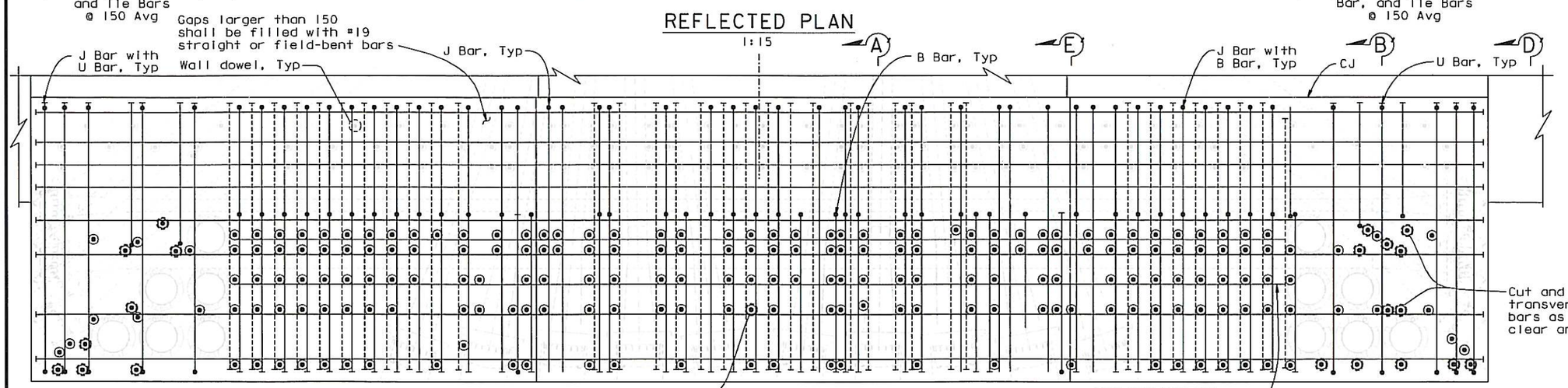

ELEVATION
1:15

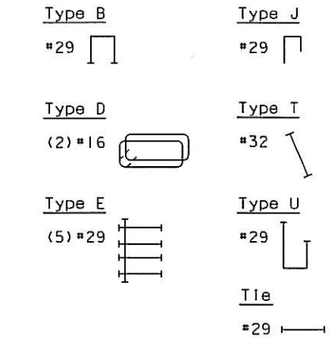

CONTRACT CHANGE ORDER NO. 331
SHEET 19 OF 36

REQUESTS FOR INFORMATION NOT ADDRESSED IN THIS CCO REMAIN IN FORCE

ALL DIMENSIONS ARE IN MILLIMETERS UNLESS OTHERWISE SHOWN

A. Akinsanya / W. Long
DESIGN OVERSIGHT
SIGN OFF DATE 07/01/13

MARK	DATE	DESCRIPTIONS	BY	CH'D	CCO#
0	01/01/13	RXERXE2 PLANS	XX	MM	XXX

REVISIONS

DESIGN	BY A. Sanjines	CHECKED	S. Rodriguez
DETAILS	BY M. Benoit	CHECKED	H. Patel
QUANTITIES	BY N. Vo	CHECKED	J. Grove

PREPARED FOR THE STATE OF CALIFORNIA DEPARTMENT OF TRANSPORTATION

M. Nader
PROJECT ENGINEER

BRIDGE NO. 34-0006L/R
KILOMETER POST 13.2/13.9

SAN FRANCISCO OAKLAND BAY BRIDGE
EAST SPAN SEISMIC SAFETY PROJECT
SELF-ANCHORED SUSPENSION BRIDGE
(SUPERSTRUCTURE & TOWER)

S1 & S2 NEW DESIGN: REINFORCEMENT DETAILS NO.1

Rev. Date: 5-22-13

ORIGINAL SCALE IN MILLIMETERS FOR REDUCED PLANS 0 10 20 30 40 50 60 70 80 90 100

CU 04
EA 0120F1

DISREGARD PRINTS BEARING EARLIER REVISION DATES

REVISION DATES (PRELIMINARY STAGE ONLY) 07/01/13

SHEET 1025 14 OF

FILE => I:\bb\04-012001\sas\contract plans and cco\cco\cco=331\1-original 07-01-13\dgn\aeplr24.dgn

100 % PS&E

USERNAME => msmith DATE PLOTTED => 03 JUL 2013 TIME PLOTTED => 14:41:00

DIST.	COUNTY	ROUTE	KILOMETER POST TOTAL PROJECT	SHEET NO.	TOTAL SHEETS
04	SF	80	13.2/13.9	519515	1204

REGISTERED ENGINEER - CIVIL

07-01-13

PLANS APPROVAL DATE

REGISTERED PROFESSIONAL ENGINEER Marwan N. Nader No. C 054426 Exp. 12/31/13 CIVIL STATE OF CALIFORNIA

The State of California or its officers or agents shall not be responsible for the accuracy or completeness of electronic copies of this plan sheet.

T.Y. LIN / MOFFATT & NICHOL
825 BATTERY STREET
SAN FRANCISCO, CA 94111

Caltrans now has a web site! To get to the web site, go to: http://www.dot.ca.gov

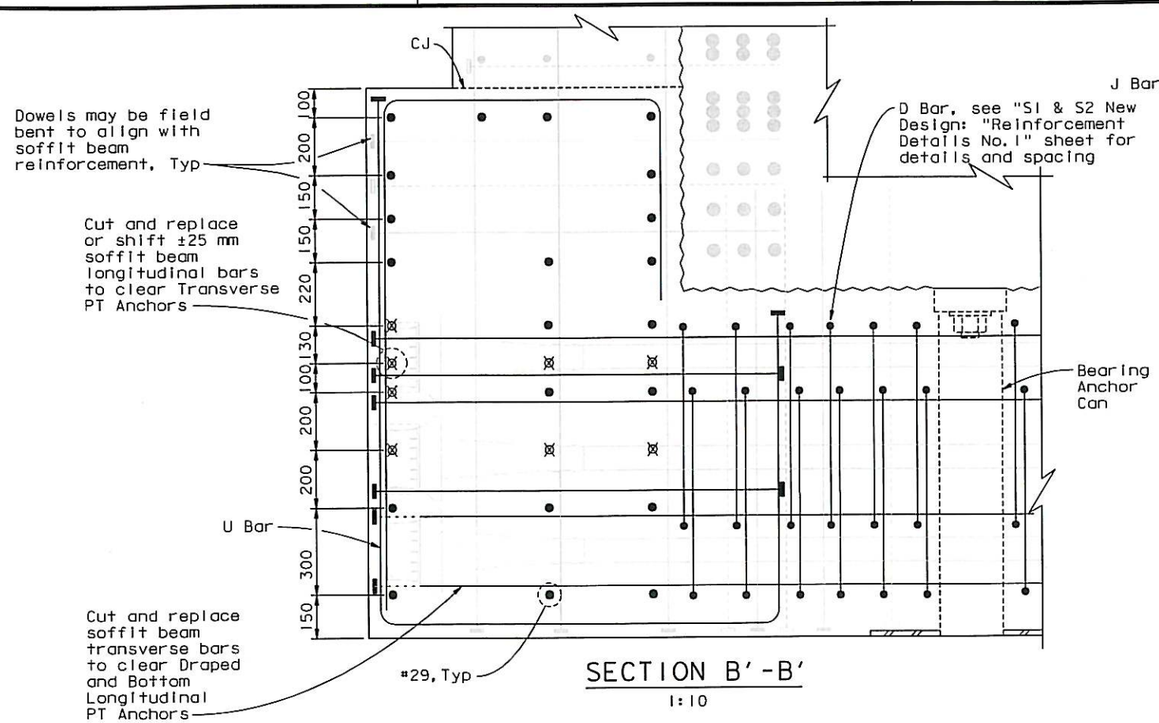

SECTION B'-B'
1:10

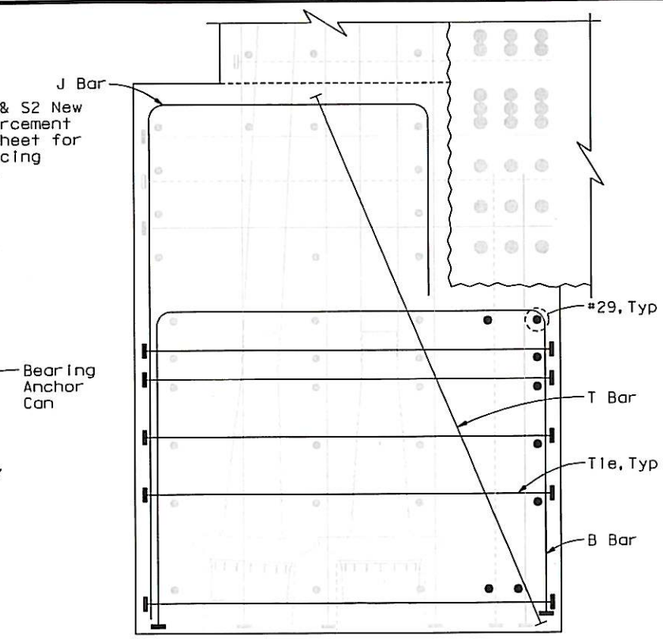

SECTION A'-A'
1:10

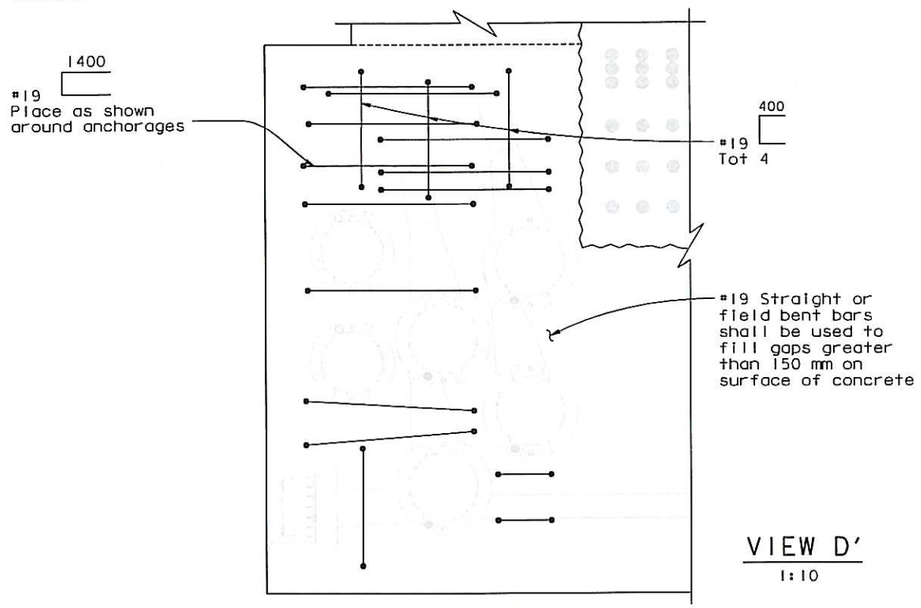

VIEW D'
1:10

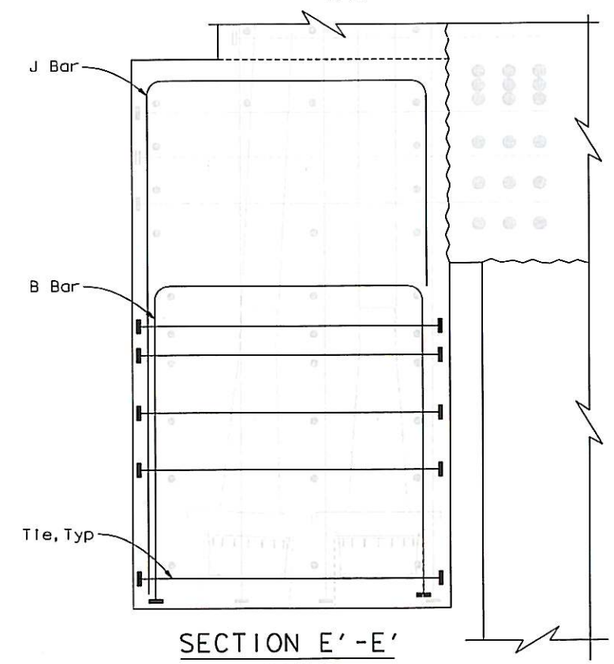

SECTION E'-E'
1:10

Type B
#29

Type U
#29

Type D
(2) #16

Type J
#29

Type T
#32

Tie
#29

NOTES:

1. See Section B'-B' for typical soffit beam reinforcement not shown in Sections A'-A', D'-D' and E'-E'.
2. See "S1 & S2 New Design: Construction Details No. 4" and "S1 & S2 New Design: Construction Details No. 5" sheets for dowel details. Not all dowels are shown for clarity.
3. See "S1 & S2 New Design: Reinforcement Details No. 4" sheet for typical wall reinforcement.
4. See "S1 & S2 New Design: P.T. Details No. 1" for bearing anchor can detail.

CONTRACT CHANGE ORDER NO. 331
SHEET 20 OF 36

REQUESTS FOR INFORMATION NOT ADDRESSED IN THIS CCO REMAIN IN FORCE

ALL DIMENSIONS ARE IN MILLIMETERS UNLESS OTHERWISE SHOWN

A. Akinsanya / W. Long
DESIGN OVERSIGHT
SIGN OFF DATE 07/01/13

MARK	DATE	DESCRIPTIONS	BY	CH'D	CCO#
0	07/01/13	PIER E2 PLANS	AS	MN	331

REVISIONS

DESIGN	BY A. Sanjines	CHECKED S. Rodriguez	
DETAILS	BY M. Benoit	CHECKED H. Patel	
QUANTITIES	BY N. Vo	CHECKED J. Grove	

PREPARED FOR THE STATE OF CALIFORNIA DEPARTMENT OF TRANSPORTATION

M. Nader
PROJECT ENGINEER

BRIDGE NO. 34-0006L/R
KILOMETER POST 13.2/13.9

SAN FRANCISCO OAKLAND BAY BRIDGE
EAST SPAN SEISMIC SAFETY PROJECT
SELF-ANCHORED SUSPENSION BRIDGE
(SUPERSTRUCTURE & TOWER)

S1 & S2 NEW DESIGN: REINFORCEMENT DETAILS NO. 2

Rev. Date: 5-22-13

ORIGINAL SCALE IN MILLIMETERS FOR REDUCED PLANS 0 10 20 30 40 50 60 70 80 90 100

CU 04
EA 0120F1

DISREGARD PRINTS BEARING EARLIER REVISION DATES → 07/01/13

REVISION DATES (PRELIMINARY STAGE ONLY)

SHEET 102515 OF

FILE => I:\bb\04-012001\sas\contract plans and cco\cco\cco#331\1-original 07-01-13\dgn\aeplr25.dgn

100 % PS&E

DATE PLOTTED => 03 JUL 2013 TIME PLOTTED => 14:40:27

USERNAME => msmith

DIST.	COUNTY	ROUTE	KILOMETER POST TOTAL PROJECT	SHEET NO.	TOTAL SHEETS
04	SF	80	13.2/13.9	519516	1204

REGISTERED ENGINEER - CIVIL

07-01-13

PLANS APPROVAL DATE

REGISTERED PROFESSIONAL ENGINEER Marwan N. Nader No. C 054426 Exp. 12/31/13 CIVIL STATE OF CALIFORNIA

The State of California or its officers or agents shall not be responsible for the accuracy or completeness of electronic copies of this plan sheet.

T.Y. LIN / MOFFATT & NICHOL
825 BATTERY STREET
SAN FRANCISCO, CA 94111

Caltrans now has a web site! To get to the web site, go to: http://www.dot.ca.gov

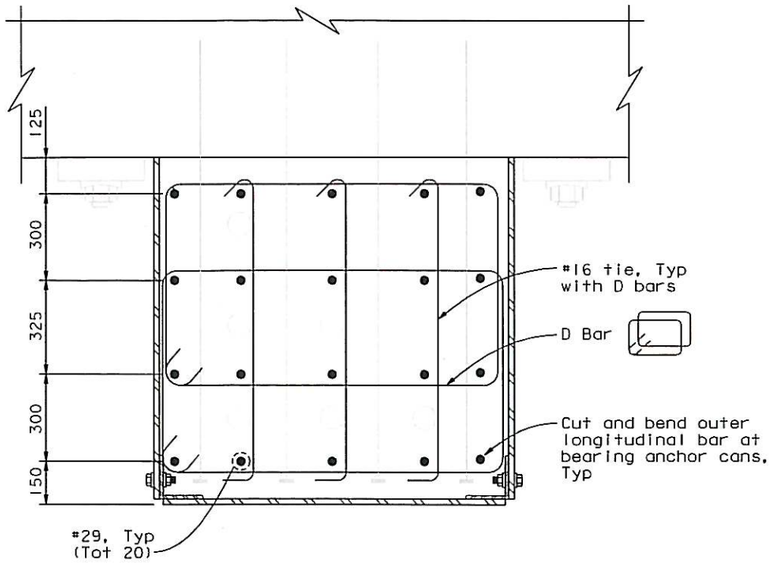

SECTION D-D
1:10

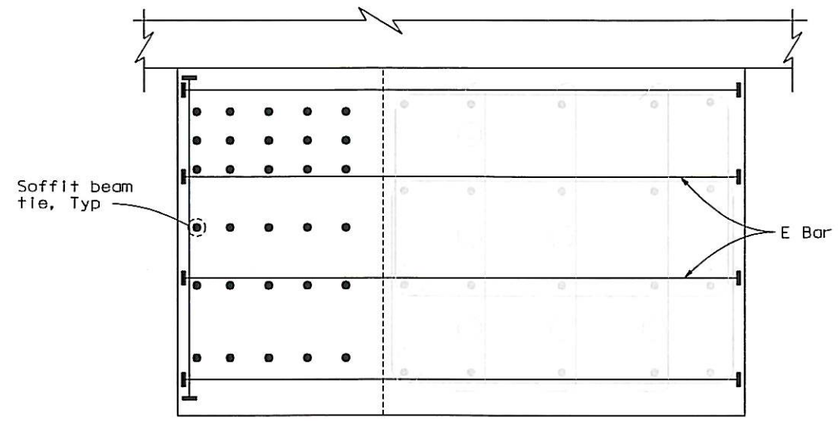

SECTION F-F
1:10

Type D
(2) #16

Type E
(5) #29

Tie
#29

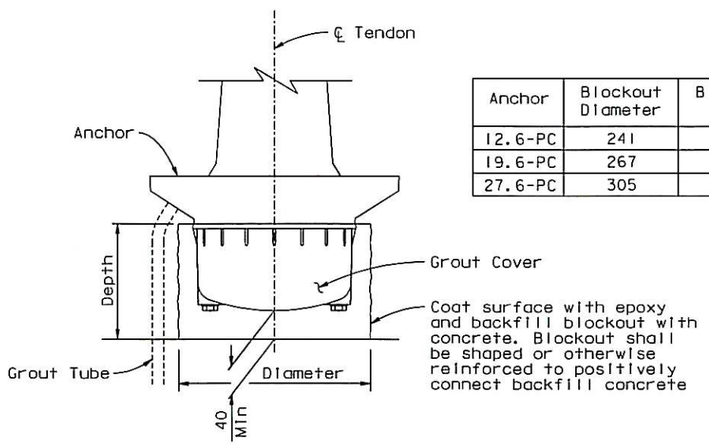

Anchor	Blockout Diameter	Blockout Depth
12.6-PC	241	178
19.6-PC	267	200
27.6-PC	305	250

TYPICAL ANCHORAGE BLOCKOUT DETAIL
1:5

CONTRACT CHANGE ORDER NO. 331
SHEET 21 OF 36

REQUESTS FOR INFORMATION NOT ADDRESSED IN THIS CCO REMAIN IN FORCE

ALL DIMENSIONS ARE IN MILLIMETERS UNLESS OTHERWISE SHOWN

A. Akinsanya / W. Long
DESIGN OVERSIGHT
SIGN OFF DATE 07/01/13

MARK	DATE	DESCRIPTIONS	BY	CH'D	CCO#
0	07/01/13	PIER E2 PLANS	AS	MN	331

REVISIONS

DESIGN	BY A. Sanjines	CHECKED S. Rodriguez	
DETAILS	BY M. Benoit	CHECKED H. Patel	
QUANTITIES	BY N. Vo	CHECKED J. Grove	

PREPARED FOR THE STATE OF CALIFORNIA DEPARTMENT OF TRANSPORTATION

M. Nader
PROJECT ENGINEER

BRIDGE NO. 34-0006L/R
KILOMETER POST 13.2/13.9

SAN FRANCISCO OAKLAND BAY BRIDGE
EAST SPAN SEISMIC SAFETY PROJECT
SELF-ANCHORED SUSPENSION BRIDGE
(SUPERSTRUCTURE & TOWER)

S1 & S2 NEW DESIGN: REINFORCEMENT DETAILS NO.3

Rev. Date: 5-22-13

ORIGINAL SCALE IN MILLIMETERS FOR REDUCED PLANS 0 10 20 30 40 50 60 70 80 90 100

CU 04
EA 0120F1

DISREGARD PRINTS BEARING EARLIER REVISION DATES 07/01/13

REVISION DATES (PRELIMINARY STAGE ONLY)

SHEET 102516 OF

FILE => L:\BB\04-0120D1\SAS\Contract Plans and CCO\CCO\CCO#331\1-Original 07-01-13\DGN\aepir26.dgn

100 % PS&E

USERNAME => arivera DATE PLOTTED => 03 JUL 2013 TIME PLOTTED => 17:04:27

DIST.	COUNTY	ROUTE	KILOMETER POST TOTAL PROJECT	SHEET NO.	TOTAL SHEETS
04	SF	80	13.2/13.9	519517	1204

REGISTERED ENGINEER - CIVIL

07-01-13

PLANS APPROVAL DATE

REGISTERED PROFESSIONAL ENGINEER Marwan N. Nader No. C 054426 Exp. 12/31/13 CIVIL STATE OF CALIFORNIA

The State of California or its officers or agents shall not be responsible for the accuracy or completeness of electronic copies of this plan sheet.

T.Y. LIN / MOFFATT & NICHOL
825 BATTERY STREET
SAN FRANCISCO, CA 94111

Caltrans now has a web site! To get to the web site, go to: http://www.dot.ca.gov

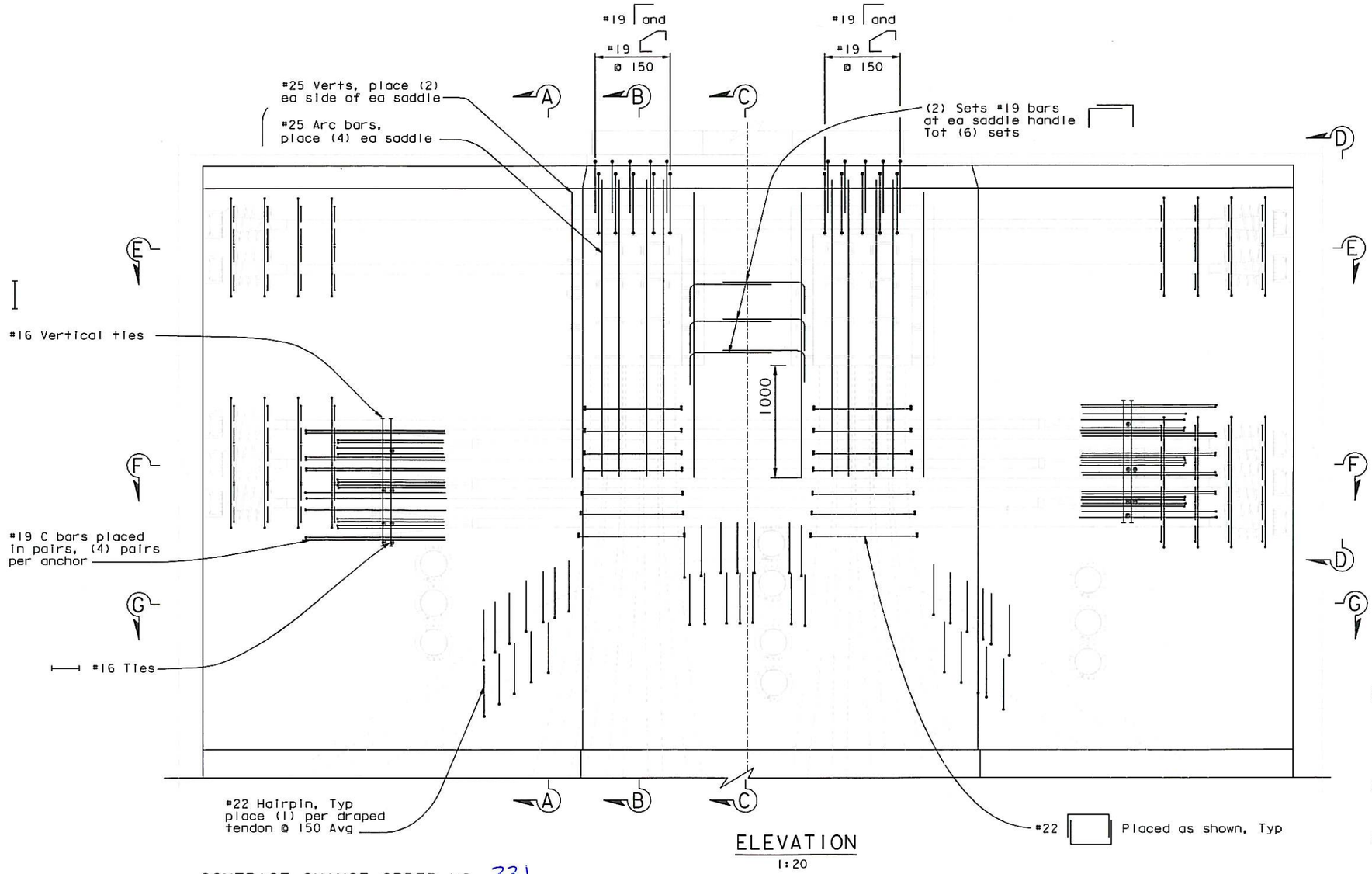

ELEVATION
1:20

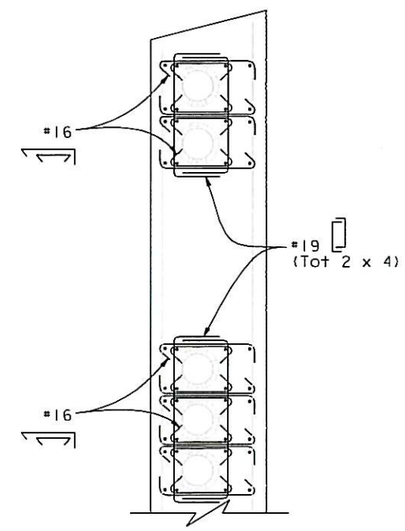

VIEW D-D
1:20
(Ties shall engage horizontal or vertical bars; rotate to fit)

NOTES:

1. Typical wall reinforcement not shown; see "S1 & S2 New Design: Reinforcement Details No. 4" and "S1 & S2 New Design: Reinforcement Details No. 5" sheets.
2. Sections E-E, F-F, and G-G can be found on "S1 & S2 New Design: Reinforcement Details No. 5" sheet.
3. Sections A-A, B-B, and C-C can be found on "S1 & S2 New Design: Reinforcement Details No. 6 sheet.

CONTRACT CHANGE ORDER NO. 331
SHEET 22 OF 36

REQUESTS FOR INFORMATION NOT ADDRESSED IN THIS CCO REMAIN IN FORCE

ALL DIMENSIONS ARE IN MILLIMETERS UNLESS OTHERWISE SHOWN

A. Akinsanya / W. Long
DESIGN OVERSIGHT
SIGN OFF DATE 07/01/13

MARK	DATE	DESCRIPTIONS	BY	CH'D	CCO#
0	07/01/13	PIER E2 PLANS	AS	MN	331

REVISIONS

DESIGN	BY A. Sanjines	CHECKED S. Rodriguez	
DETAILS	BY M. Benoit	CHECKED H. Patel	
QUANTITIES	BY N. Vo	CHECKED J. Grove	

PREPARED FOR THE STATE OF CALIFORNIA DEPARTMENT OF TRANSPORTATION

M. Nader
PROJECT ENGINEER

BRIDGE NO. 34-0006L/R
KILOMETER POST 13.2/13.9

SAN FRANCISCO OAKLAND BAY BRIDGE
EAST SPAN SEISMIC SAFETY PROJECT
SELF-ANCHORED SUSPENSION BRIDGE
(SUPERSTRUCTURE & TOWER)

S1 & S2 NEW DESIGN: REINFORCEMENT DETAILS NO. 4

Rev. Date: 5-22-13

ORIGINAL SCALE IN MILLIMETERS FOR REDUCED PLANS 0 10 20 30 40 50 60 70 80 90 100

CU 04
EA 0120F1

DISREGARD PRINTS BEARING EARLIER REVISION DATES 07/01/13

REVISION DATES (PRELIMINARY STAGE ONLY)

SHEET 102517 OF

FILE => I:\bb\04-0120F1\sas\contract plans and cco\cco\cco#331\1-original 07-01-13\dgn\aeplr27.dgn

USERNAME => msmith DATE PLOTTED => 03 JUL 2013 TIME PLOTTED => 14:39:33

100 % PS&E

DIST.	COUNTY	ROUTE	KILOMETER POST TOTAL PROJECT	SHEET NO.	TOTAL SHEETS
04	SF	80	13.2/13.9	519S18	1204

REGISTERED ENGINEER - CIVIL

07-01-13

PLANS APPROVAL DATE

REGISTERED PROFESSIONAL ENGINEER Marwan N. Nader No. C 054426 Exp. 12/31/13 CIVIL STATE OF CALIFORNIA

The State of California or its officers or agents shall not be responsible for the accuracy or completeness of electronic copies of this plan sheet.

T.Y. LIN / MOFFATT & NICHOL
825 BATTERY STREET
SAN FRANCISCO, CA 94111

Caltrans now has a web site! To get to the web site, go to: http://www.dot.ca.gov

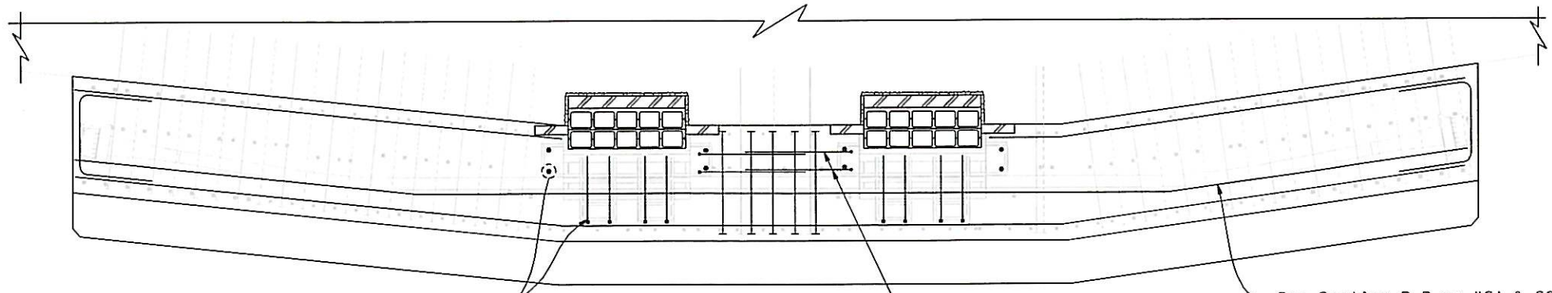

SECTION E-E
1:20

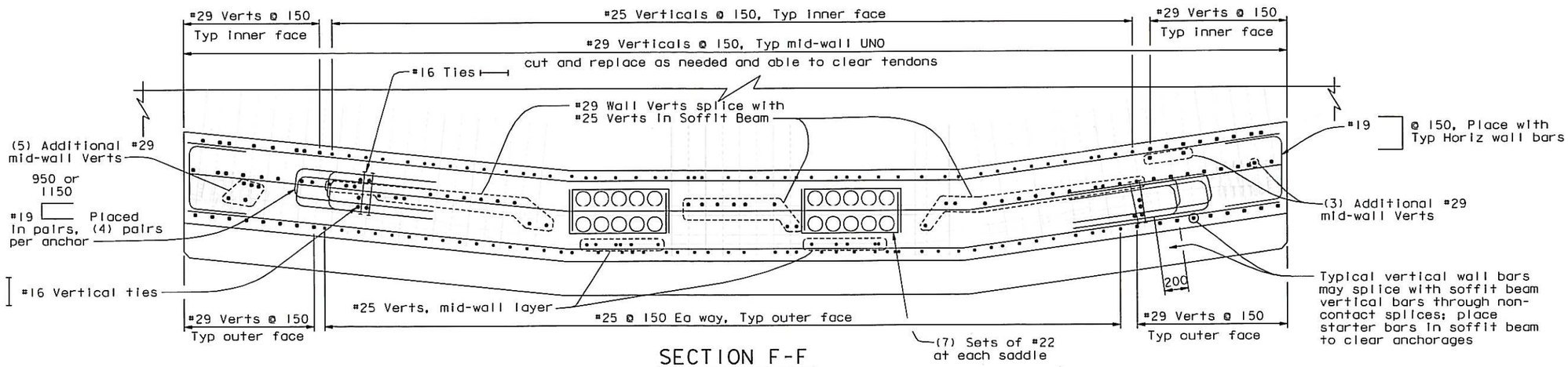

SECTION F-F
1:20

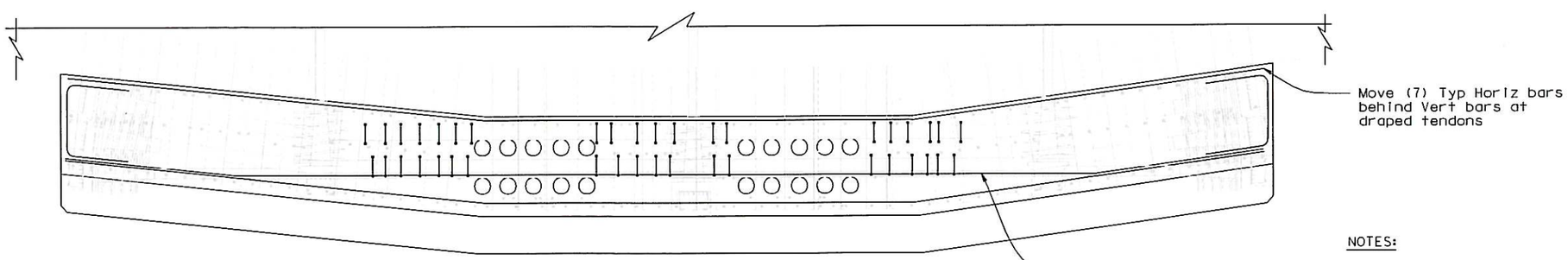

SECTION G-G
1:20

NOTES:

1. See Section F-F for typical wall reinforcement details not shown and/or called out in Sections E-E and G-G.
2. See "S1 & S2 New Design: Construction Details No. 2" sheet for dowel details and locations.

100 % PS&E

CONTRACT CHANGE ORDER NO. 331
SHEET 23 OF 36

REQUESTS FOR INFORMATION NOT ADDRESSED IN THIS CCO REMAIN IN FORCE

ALL DIMENSIONS ARE IN MILLIMETERS UNLESS OTHERWISE SHOWN

A. Akinsanya / W. Long
DESIGN OVERSIGHT
SIGN OFF DATE 07/01/13

MARK	DATE	DESCRIPTIONS	BY	CH'D	CCO#
0	07/01/13	PIER E2 PLANS	AS	MN	331

REVISIONS

DESIGN	BY A. Sanjines	CHECKED S. Rodriguez	
DETAILS	BY M. Benoit	CHECKED H. Patel	
QUANTITIES	BY N. Vo	CHECKED J. Grove	

PREPARED FOR THE STATE OF CALIFORNIA DEPARTMENT OF TRANSPORTATION

M. Nader
PROJECT ENGINEER

BRIDGE NO. 34-0006L/R
KILOMETER POST 13.2/13.9

SAN FRANCISCO OAKLAND BAY BRIDGE
EAST SPAN SEISMIC SAFETY PROJECT
SELF-ANCHORED SUSPENSION BRIDGE
(SUPERSTRUCTURE & TOWER)

S1 & S2 NEW DESIGN: REINFORCEMENT DETAILS NO.5

Rev. Date: 5-22-13

ORIGINAL SCALE IN MILLIMETERS FOR REDUCED PLANS 0 10 20 30 40 50 60 70 80 90 100

CU 04
EA 0120F1

DISREGARD PRINTS BEARING EARLIER REVISION DATES 07/01/13

REVISION DATES (PRELIMINARY STAGE ONLY)

SHEET 102S18 OF

FILE => I:\bb\04-0120F1\sas\contract plans and cco\cco\cco#331\1-original 07-01-13\dgn\aeplr28.dgn

USERNAME => msmith DATE PLOTTED => 03 JUL 2013 TIME PLOTTED => 14:38:51

DIST.	COUNTY	ROUTE	KILOMETER POST TOTAL PROJECT	SHEET NO.	TOTAL SHEETS
04	SF	80	13.2/13.9	519519	1204

REGISTERED ENGINEER - CIVIL

07-01-13

PLANS APPROVAL DATE

REGISTERED PROFESSIONAL ENGINEER Marwan N. Nader No. C 054426 Exp. 12/31/13 CIVIL STATE OF CALIFORNIA

The State of California or its officers or agents shall not be responsible for the accuracy or completeness of electronic copies of this plan sheet.

T.Y. LIN / MOFFATT & NICHOL
825 BATTERY STREET
SAN FRANCISCO, CA 94111

Caltrans now has a web site! To get to the web site, go to: http://www.dot.ca.gov

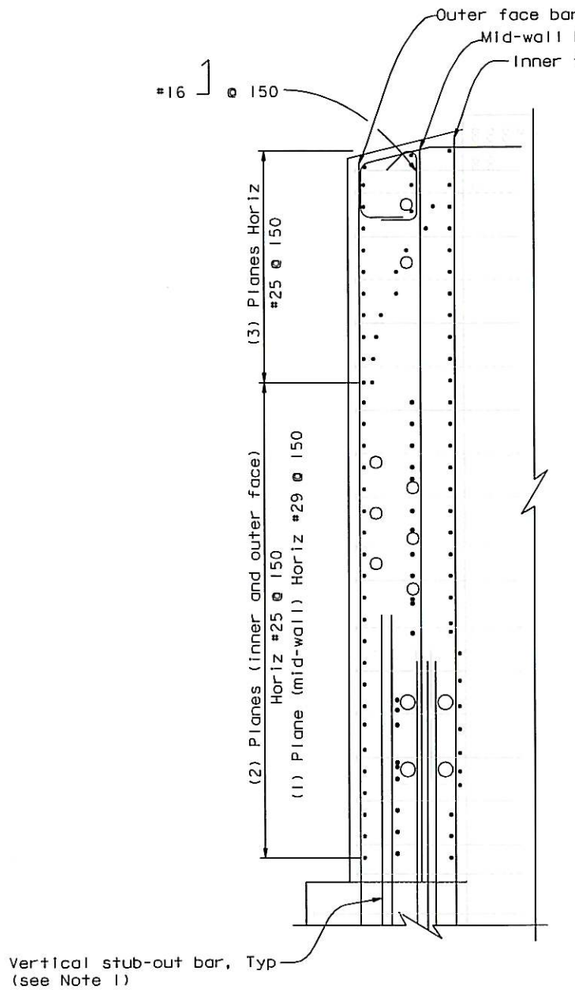

SECTION A-A
1:20
(Typical wall section)

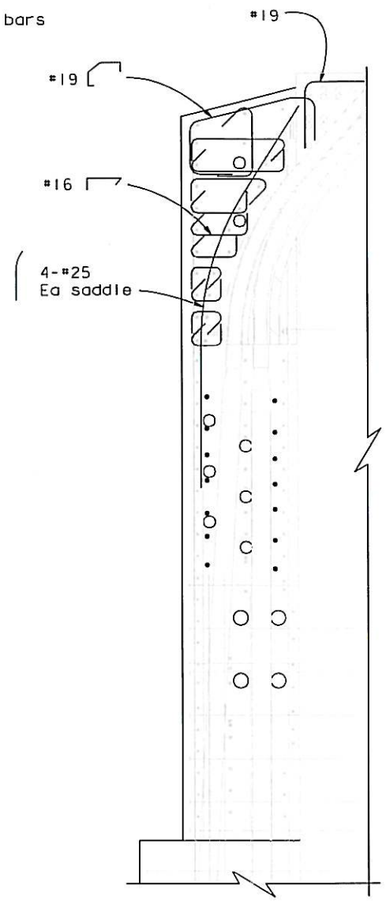

SECTION B-B
1:20
(Wall section through saddle)

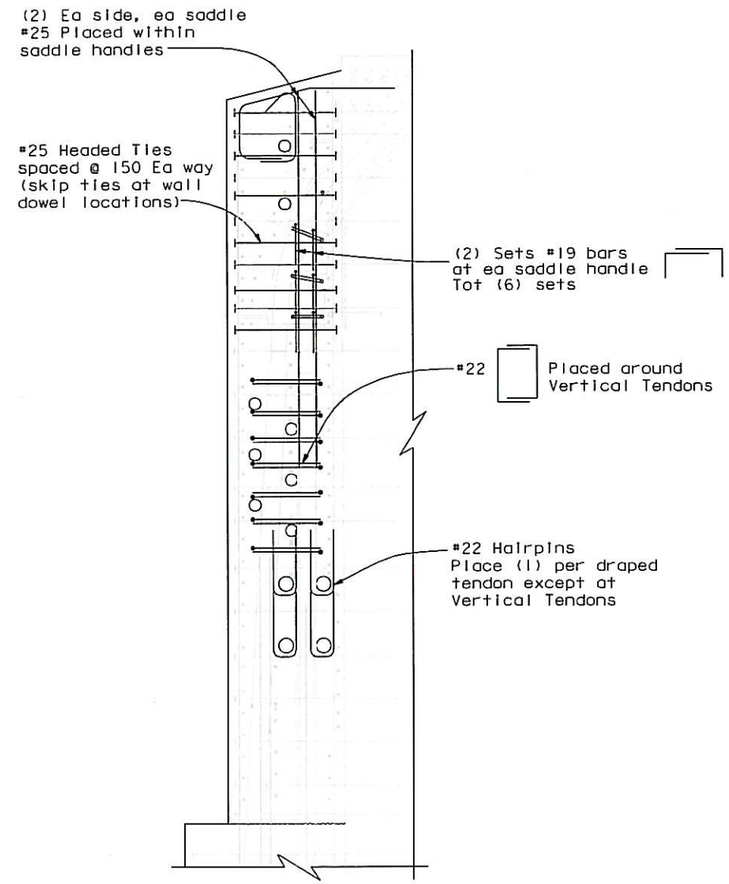

SECTION C-C
1:20
(Wall section between saddles)

NOTES:

1. Non-contact lap splices may be used to continue vertical bars through depth of wall and soffit beam.
2. Bars cut to avoid saddles and anchorages shall be spliced with bars placed to clear. Engineer shall be notified when bars cannot be replaced.
3. See Section A-A for wall reinforcement details not shown and/or called out in Sections B-B and C-C.
4. See "S1 & S2 New Design: Construction Details No. 2" sheet for dowel details and locations.

CONTRACT CHANGE ORDER NO. 331
SHEET 24 OF 36

REQUESTS FOR INFORMATION NOT ADDRESSED IN THIS CCO REMAIN IN FORCE

ALL DIMENSIONS ARE IN MILLIMETERS UNLESS OTHERWISE SHOWN

A. Akinsanya / W. Long
DESIGN OVERSIGHT
SIGN OFF DATE 07/01/13

MARK	DATE	DESCRIPTIONS	BY	CH'D	CCO#
0	07/01/13	PIER E2 PLANS	AS	MN	331

REVISIONS

DESIGN	BY A. Sanjines	CHECKED	S. Rodriguez
DETAILS	BY M. Benoit	CHECKED	H. Patel
QUANTITIES	BY N. Vo	CHECKED	J. Grove

PREPARED FOR THE STATE OF CALIFORNIA DEPARTMENT OF TRANSPORTATION

M. Nader
PROJECT ENGINEER

BRIDGE NO. 34-0006L/R
KILOMETER POST 13.2/13.9

SAN FRANCISCO OAKLAND BAY BRIDGE
EAST SPAN SEISMIC SAFETY PROJECT
SELF-ANCHORED SUSPENSION BRIDGE
(SUPERSTRUCTURE & TOWER)

S1 & S2 NEW DESIGN: REINFORCEMENT DETAILS NO. 6

Rev. Date: 5-22-13

ORIGINAL SCALE IN MILLIMETERS FOR REDUCED PLANS 0 10 20 30 40 50 60 70 80 90 100

CU 04
EA 0120F1

DISREGARD PRINTS BEARING EARLIER REVISION DATES 07/01/13

REVISION DATES (PRELIMINARY STAGE ONLY)

SHEET 102519 OF

FILE => I:\bb\04-012001\sas\contract plans and cco\cco\cco#331\1-original 07-01-13\dgn\aaplr29.dgn

100 % PS&E

USERNAME => msmith DATE PLOTTED => 03 JUL 2013 TIME PLOTTED => 14:38:20

DIST.	COUNTY	ROUTE	KILOMETER POST TOTAL PROJECT	SHEET NO.	TOTAL SHEETS
04	SF	80	13.2/13.9	519S20	1204

REGISTERED ENGINEER - CIVIL

07-01-13

PLANS APPROVAL DATE

REGISTERED PROFESSIONAL ENGINEER Marwan N. Nader No. C 054426 Exp. 12/31/13 CIVIL STATE OF CALIFORNIA

The State of California or its officers or agents shall not be responsible for the accuracy or completeness of electronic copies of this plan sheet.

T.Y. LIN / MOFFATT & NICHOL
825 BATTERY STREET
SAN FRANCISCO, CA 94111

Caltrans now has a web site! To get to the web site, go to: http://www.dot.ca.gov

SURFACE AND SITE PREPARATION NOTES:

- Survey existing conditions and locate control points.
- Core Through-Cap tendon holes; hole diameter may increase near surface to accommodate trumpet.
- Remove concrete trough at Cap Beam top corner for saddle boxes (existing corner rebar to remain).
- Existing concrete contact surface preparation:
  a. Cut keys into the existing vertical concrete faces.
  b. Expose aggregate on all surfaces by bush hammering to 3/8" (10mm) amplitude (see Bush Hammering Notes).
  c. Pressure wash all prepared concrete surfaces (side walls, excavated corner troughs and soffit).
- Pre-locate tendon layouts. Install drill and bond dowels on side wall and soffit.
- Prepare surface of shear key base plate (removal of existing coatings on contact areas, grinding of corners). Finish shall be class B.
- Drill and tap Shear Key base vertical faces for new saddle wedge plate, and support plate installation. Drill and tap shear key base top face for new saddle tab installation.
- Remove existing A354BD spherical nuts and washers in shear key/saddle contact area. Cut anchor bolt extensions flush with top of shear key base plate. Trimming of adjacent washers may be required. Bolts with trimmed washers shall not be stressed beyond snug tight. Grout anchor bolt voids to seal with Sikadur 35 LV or similar.
- At extracted rod locations, place 3" Dia A354BD replacement dowels, 600 length (Min). Top of replacement dowels shall be flush with the top of the shear key base plate. Grout voids to seal with Sikadur 35 LV or similar.
- Remove concrete at corners of piers from bottom of recess to 1200 below existing cap beam (see concrete removal detail).
- Bearing Rods to be enclosed in the new soffit beam shall be raised as needed in order to provide access for possible future rod tensioning operations. The rods shall be detensioned one at a time. A minimum extension of 2" shall be left below the nuts on the bottom. The rods shall be returned to their design tension load prior to casting the new soffit beam.
- Existing broken anchor rods in the shear key/saddle contact area shall be cut and ground as needed to be flush with the top of the shear key. Prior to the final positioning, rod shall be hydraulically pushed down to close any gap that exists between upper and lower pieces of rod. Grout voids to seal with Sikadur 35 LV or similar.
- Voids at existing broken anchor rods away from the saddle shall be grouted with Sikadur 35 LV or similar. Nuts shall be in full contact with the washer.

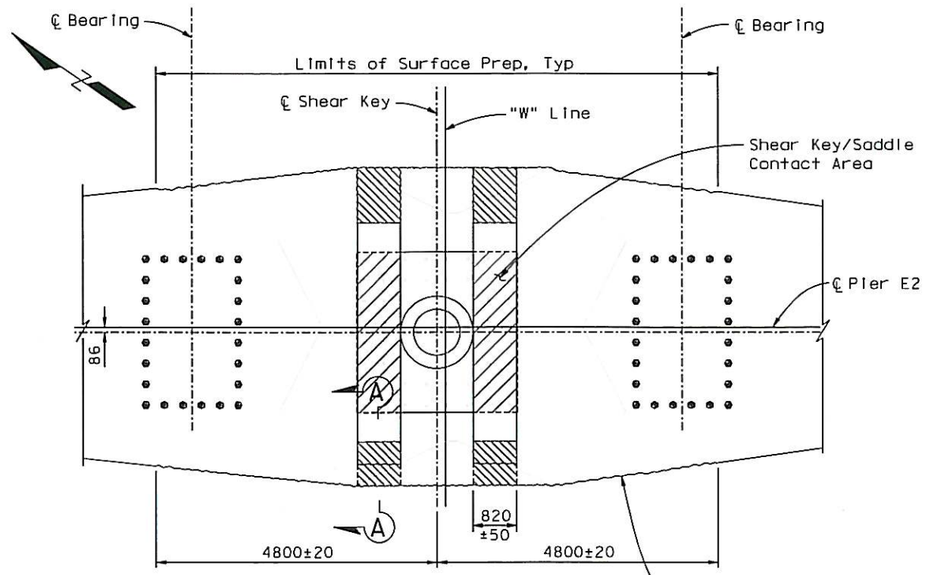

CONCRETE REMOVAL
1:50

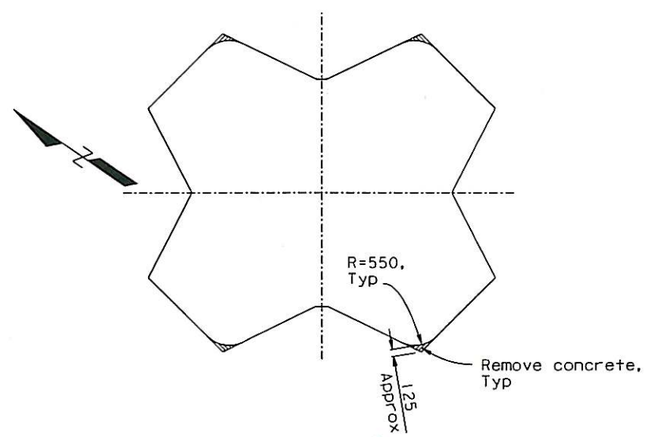

CONCRETE REMOVAL AT PIER
1:50

BUSH HAMMERING NOTES:

1. Vertical wall surface limit: shall be 150±20mm from top of Cap Beam and continuous to bottom edge of Cap Beam.
2. Horizontal Cap Beam surface limit shall be 4800±20mm from the centerline of Shear Key in either direction for SK-1 and SK-2.

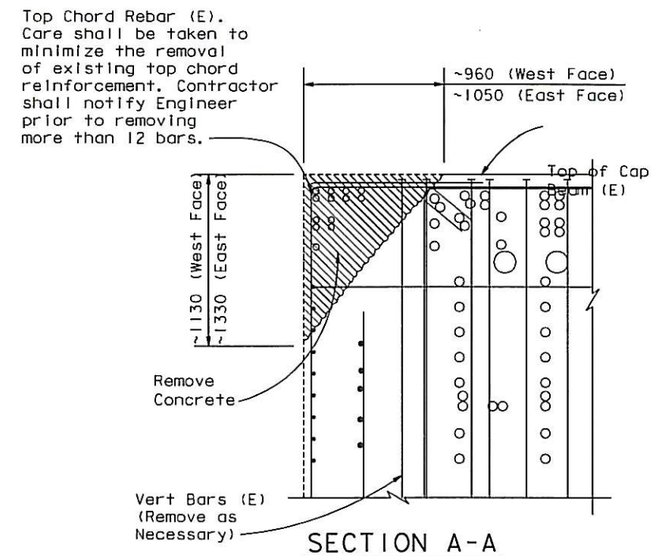

SECTION A-A
1:20

LEGEND:

- Removed Concrete
- Saddle Contact Area
- Roughened Surface

CONTRACT CHANGE ORDER NO. 331
SHEET 25 OF 36

REQUESTS FOR INFORMATION NOT ADDRESSED IN THIS CCO REMAIN IN FORCE

ALL DIMENSIONS ARE IN MILLIMETERS UNLESS OTHERWISE SHOWN

MARK	DATE	DESCRIPTIONS	BY	CH'D	CCO#
0	07/01/13	PIER E2 PLANS	AS	MN	331

REVISIONS

A. Akinsanya / W. Long
DESIGN OVERSIGHT
SIGN OFF DATE 07/01/13

Rev. Date: 5-22-13

DESIGN	BY A. Sanjines	CHECKED S. Rodriguez	
DETAILS	BY C. Hovell	CHECKED H. Patel	
QUANTITIES	BY N. Vo	CHECKED J. Grove	

PREPARED FOR THE STATE OF CALIFORNIA DEPARTMENT OF TRANSPORTATION

M. Nader
PROJECT ENGINEER

BRIDGE NO. 34-0006L/R
KILOMETER POST 13.2/13.9

SAN FRANCISCO OAKLAND BAY BRIDGE
EAST SPAN SEISMIC SAFETY PROJECT
SELF-ANCHORED SUSPENSION BRIDGE
(SUPERSTRUCTURE & TOWER)

S1 & S2 NEW DESIGN: CONSTRUCTION DETAILS NO. 1

ORIGINAL SCALE IN MILLIMETERS FOR REDUCED PLANS 0 10 20 30 40 50 60 70 80 90 100

CU 04
EA 0120F1

DISREGARD PRINTS BEARING EARLIER REVISION DATES 07/01/13

REVISION DATES (PRELIMINARY STAGE ONLY) | SHEET 102S20 | OF

FILE => I:\bb\04-012001\sas\contract plans and cco\cco\cco=331\1-original 07-01-13\dgn\aepir30.dgn

100 % PS&E

USERNAME => msmith DATE PLOTTED => 03 JUL 2013 TIME PLOTTED => 14:37:57

DIST.	COUNTY	ROUTE	KILOMETER POST TOTAL PROJECT	SHEET NO.	TOTAL SHEETS
04	SF	80	13.2/13.9	519521	1204

REGISTERED ENGINEER - CIVIL

07-01-13

PLANS APPROVAL DATE

REGISTERED PROFESSIONAL ENGINEER Marwan N. Nader No. C 054426 Exp. 12/31/13 CIVIL STATE OF CALIFORNIA

The State of California or its officers or agents shall not be responsible for the accuracy or completeness of electronic copies of this plan sheet.

T.Y. LIN / MOFFATT & NICHOL
825 BATTERY STREET
SAN FRANCISCO, CA 94111

Caltrans now has a web site! To get to the web site, go to: http://www.dot.ca.gov

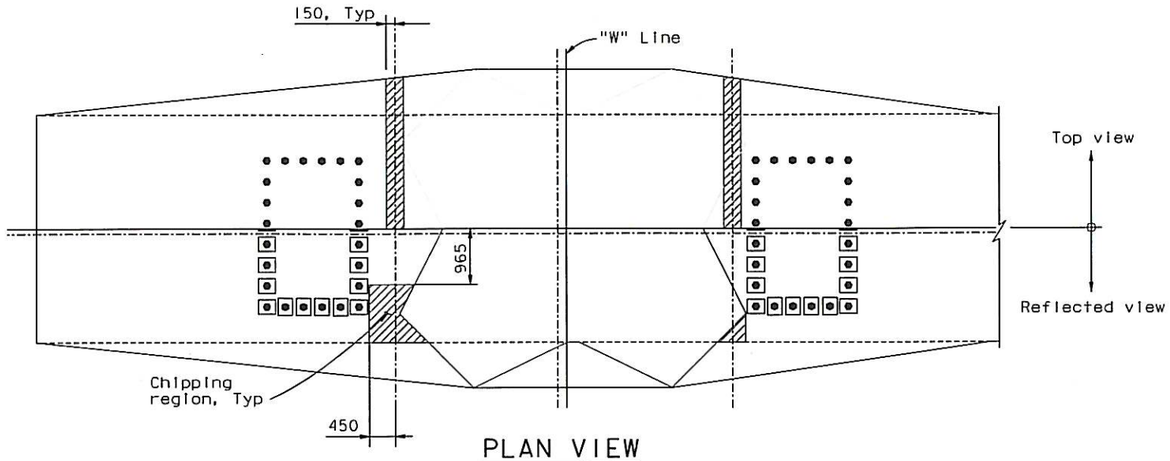

PLAN VIEW
1:50

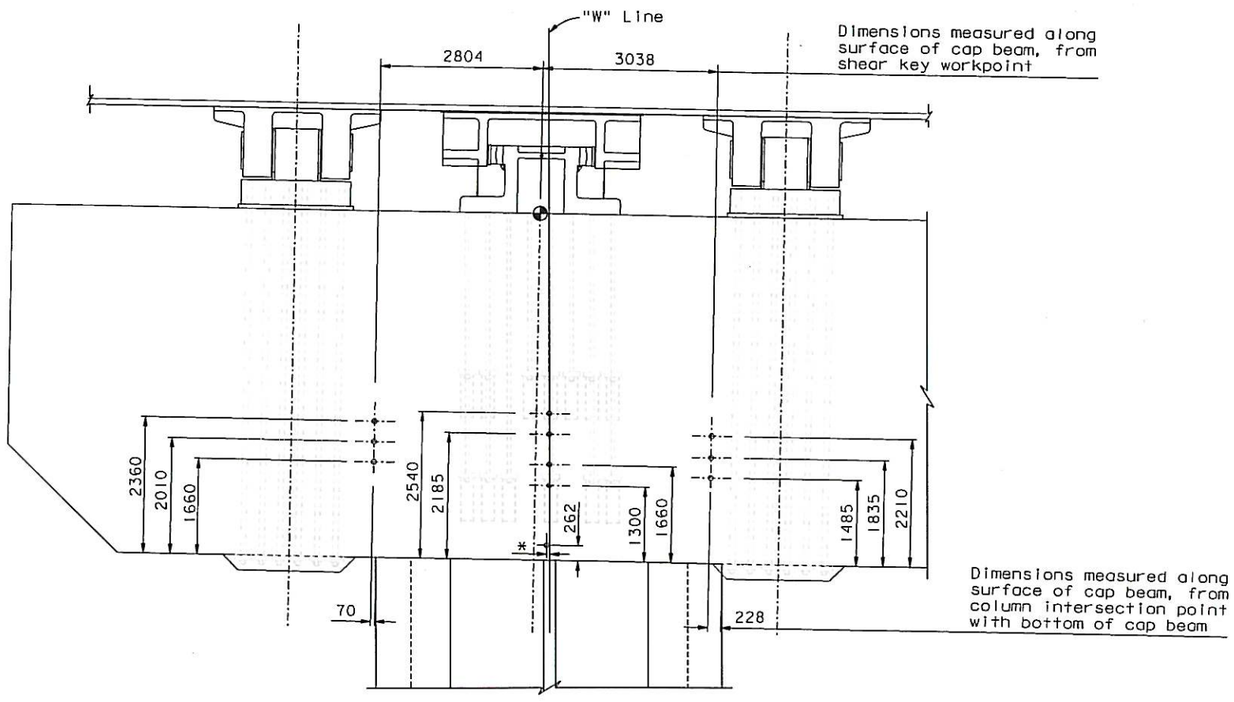

ELEVATION
1:50

* See Procedural Note 4

PROCEDURE FOR ESTABLISHING CORE LOCATIONS:

1. Expose surface of #43 headed bars in hatched region. Work may be performed on top or bottom surface of cap beam.
2. Locate coring ℄ between exposed #43 headed bars.
3. Location shall be approved by the Engineer, prior to coring.
4. Expose horizontal #36 heads in vicinity of lowest centerline coring (Through-Cap Tendon TC5B); locate core between T-heads.

NOTES:

1. Shear Key anchor bolts along ℄ of Pier (in the direct path of coring) shall be detensioned prior to coring.
2. Cores at Pier ℄ are aligned in a true vertical geometry. Outer cores are aligned along 2% slope.
3. Coring operation shall be halted under suspicion of presence of column bars or longitudinal Pier Cap post-tensioning within the core path.
4. "W" Line shown.

CONTRACT CHANGE ORDER NO. 331
SHEET 26 OF 36

REQUESTS FOR INFORMATION NOT ADDRESSED IN THIS CCO REMAIN IN FORCE

ALL DIMENSIONS ARE IN MILLIMETERS UNLESS OTHERWISE SHOWN

MARK	DATE	DESCRIPTIONS	BY	CH'D	CCO#
0	07/01/13	PIER E2 PLANS	AS	MN	331

REVISIONS

A. Akinsanya / W. Long
DESIGN OVERSIGHT
SIGN OFF DATE 07/01/13

DESIGN	BY A. Sanjines	CHECKED S. Rodriguez	
DETAILS	BY C. Hovell	CHECKED H. Patel	
QUANTITIES	BY N. Vo	CHECKED J. Grove	

PREPARED FOR THE STATE OF CALIFORNIA DEPARTMENT OF TRANSPORTATION

M. Nader
PROJECT ENGINEER

BRIDGE NO. 34-0006L/R
KILOMETER POST 13.2/13.9

SAN FRANCISCO OAKLAND BAY BRIDGE
EAST SPAN SEISMIC SAFETY PROJECT
SELF-ANCHORED SUSPENSION BRIDGE
(SUPERSTRUCTURE & TOWER)

S1 & S2 NEW DESIGN: CONSTRUCTION DETAILS NO.2

Rev. Date: 5-22-13

ORIGINAL SCALE IN MILLIMETERS FOR REDUCED PLANS 0 10 20 30 40 50 60 70 80 90 100

CU 04
EA 0120F1

DISREGARD PRINTS BEARING EARLIER REVISION DATES 07/01/13

REVISION DATES (PRELIMINARY STAGE ONLY)

SHEET 102521 OF

FILE => I:\bb\04-012001\sas\contract plans and cco\cco\cco#331\1-original 07-01-13\dgn\aeplr31.dgn

100 % PS&E

USERNAME => msmith DATE PLOTTED => 03 JUL 2013 TIME PLOTTED => 14:37:18

DIST.	COUNTY	ROUTE	KILOMETER POST TOTAL PROJECT	SHEET NO.	TOTAL SHEETS
04	SF	80	13.2/13.9	519S22	1204

REGISTERED ENGINEER - CIVIL

07-01-13

PLANS APPROVAL DATE

REGISTERED PROFESSIONAL ENGINEER Marwan N. Nader No. C 054426 Exp. 12/31/13 CIVIL STATE OF CALIFORNIA

The State of California or its officers or agents shall not be responsible for the accuracy or completeness of electronic copies of this plan sheet.

T.Y. LIN / MOFFATT & NICHOL
825 BATTERY STREET
SAN FRANCISCO, CA 94111

Caltrans now has a web site! To get to the web site, go to: http://www.dot.ca.gov

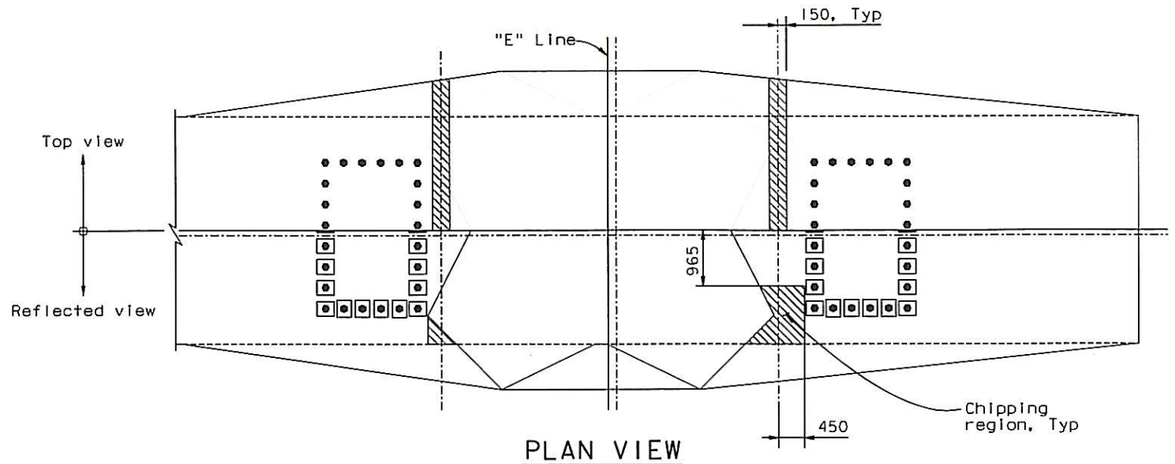

PLAN VIEW
1:50

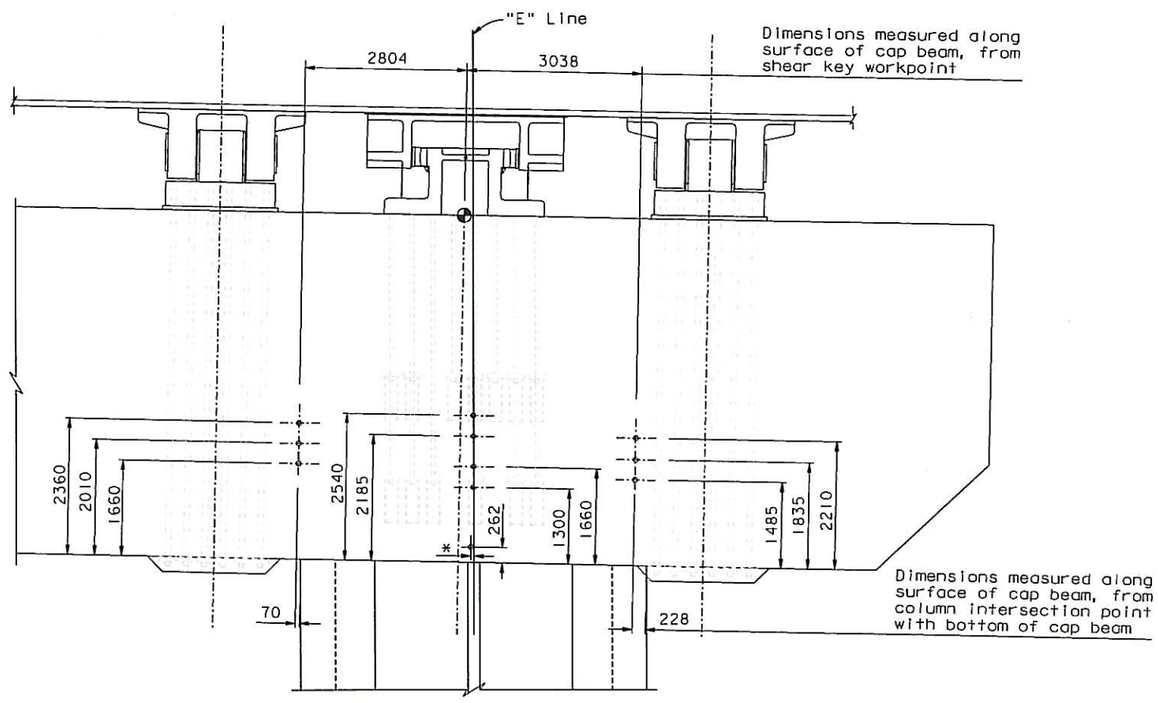

* See Prodedural Note 4

ELEVATION
1:50

PROCEDURE FOR ESTABLISHING CORE LOCATIONS:

1. Expose surface of #43 headed bars in hatched region. Work may be performed on top or bottom surface of cap beam.
2. Locate coring ℄ between exposed #43 headed bars.
3. Location shall be approved by the Engineer, prior to coring.
4. Expose horizontal #36 heads in vicinity of lowest centerline coring (Through-Cap Tendon TC5B); locate core between T-heads.

NOTES:

1. Shear Key anchor bolts along ℄ of Pier (in the direct path of coring) shall be detensioned prior to coring.
2. Cores at Pier ℄ are aligned in a true vertical geometry. Outer cores are aligned along 2% slope.
3. Coring operation shall be halted under suspicion of presence of column bars or longitudinal Pier Cap post-tensioning within the core path.
4. "E" Line shown.

CONTRACT CHANGE ORDER NO. 331
SHEET 27 OF 36

REQUESTS FOR INFORMATION NOT ADDRESSED IN THIS CCO REMAIN IN FORCE

ALL DIMENSIONS ARE IN MILLIMETERS UNLESS OTHERWISE SHOWN

MARK	DATE	DESCRIPTIONS	BY	CH'D	CCO#
0	07/01/13	PIER E2 PLANS	AS	MN	331

REVISIONS

A. Akinsanya / W. Long
DESIGN OVERSIGHT
SIGN OFF DATE 07/01/13

Rev. Date: 5-22-13

DESIGN BY A. Sanjines CHECKED S. Rodriguez
DETAILS BY C. Hovell CHECKED H. Patel
QUANTITIES BY N. Vo CHECKED J. Grove

PREPARED FOR THE STATE OF CALIFORNIA DEPARTMENT OF TRANSPORTATION

M. Nader
PROJECT ENGINEER

CU 04
EA 0120F1

BRIDGE NO. 34-0006L/R
KILOMETER POST 13.2/13.9

SAN FRANCISCO OAKLAND BAY BRIDGE
EAST SPAN SEISMIC SAFETY PROJECT
SELF-ANCHORED SUSPENSION BRIDGE
(SUPERSTRUCTURE & TOWER)

S1 & S2 NEW DESIGN: CONSTRUCTION DETAILS NO. 3

ORIGINAL SCALE IN MILLIMETERS FOR REDUCED PLANS 0 10 20 30 40 50 60 70 80 90 100

DISREGARD PRINTS BEARING EARLIER REVISION DATES 07/01/13

REVISION DATES (PRELIMINARY STAGE ONLY)

SHEET 102S22 OF

FILE => I:\bb\04-012001\sas\contract plans and cco\cco\cco#331\1-original 07-01-13\dgn\aeplr32.dgn

100% PS&E

USERNAME => msmith DATE PLOTTED => 03 JUL 2013 TIME PLOTTED => 14:36:35

DIST.	COUNTY	ROUTE	KILOMETER POST TOTAL PROJECT	SHEET NO.	TOTAL SHEETS
04	SF	80	13.2/13.9	519523	1204

REGISTERED ENGINEER - CIVIL

07-01-13

PLANS APPROVAL DATE

REGISTERED PROFESSIONAL ENGINEER Marwan N. Nader No. C 054426 Exp. 12/31/13 CIVIL STATE OF CALIFORNIA

The State of California or its officers or agents shall not be responsible for the accuracy or completeness of electronic copies of this plan sheet.

T.Y. LIN / MOFFATT & NICHOL
825 BATTERY STREET
SAN FRANCISCO, CA 94111

Caltrans now has a web site! To get to the web site, go to: http://www.dot.ca.gov

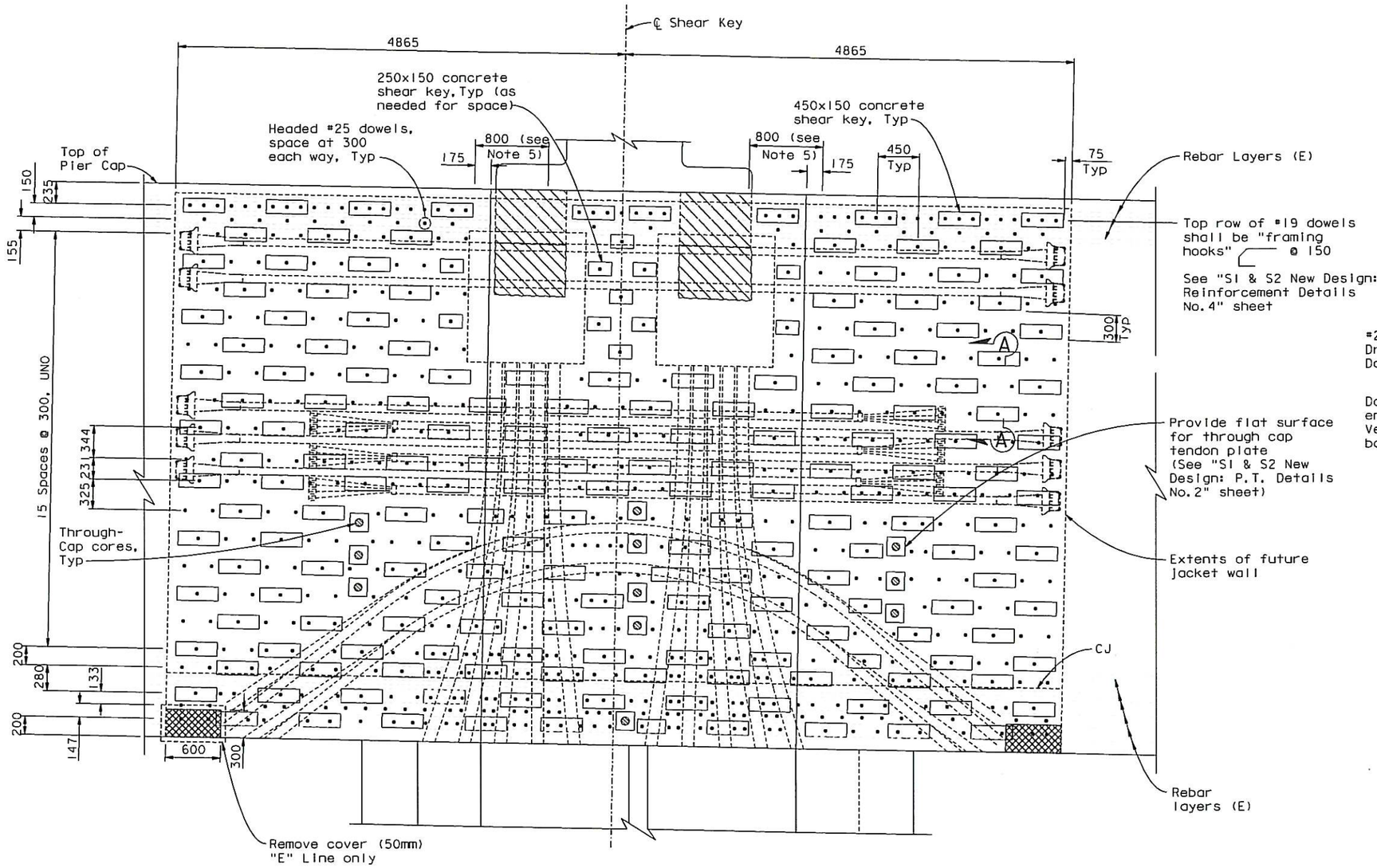

SURFACE PREPARATION AND APPROXIMATE KEY LOCATIONS

1:25

(West face shown, East face similar)

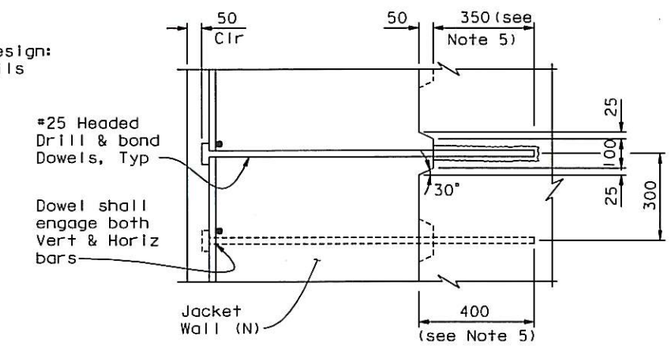

SECTION A-A

1:10

NOTES:

1. Dimensions are 450x150 typical, spaced as shown, staggered.
2. Concrete Shear Key geometry must be adjusted to accommodate lower saddle and through-cap tendons.
3. Upper level keys and lower level keys shall be adjusted to accommodate dowel locations located between existing Cap Beam main top and bottom bar reinforcement.
4. Two #25 dowels shall be placed between adjacent tendon ducts from cap beam soffit to one meter above soffit, at spacings shown.
5. In indicated areas, column reinforcement exists within 400 mm of surface. Drilling shall be stopped upon contact with column hoops or verticals. If embedment of 330 mm is attainable in this area, no change is required. Otherwise, adjust drilling location to clear bar.

LEGEND:

- Concrete Shear Key
- Typical Dowel, UNO
- Cored Hole with Cover Plate
- Concrete cover removed (50mm)

CONTRACT CHANGE ORDER NO. 331
SHEET 28 OF 36

REQUESTS FOR INFORMATION NOT ADDRESSED IN THIS CCO REMAIN IN FORCE

ALL DIMENSIONS ARE IN MILLIMETERS UNLESS OTHERWISE SHOWN

A. Akinsanya / W. Long
DESIGN OVERSIGHT
SIGN OFF DATE 07/01/13

MARK	DATE	DESCRIPTIONS	BY	CH'D	CCO#
0	07/01/13	PIER E2 PLANS	AS	MN	331

REVISIONS

DESIGN	BY A. Sanjines	CHECKED S. Rodriguez	
DETAILS	BY C. Hovell	CHECKED H. Patel	
QUANTITIES	BY N. Vo	CHECKED J. Grove	

PREPARED FOR THE STATE OF CALIFORNIA DEPARTMENT OF TRANSPORTATION

M. Nader
PROJECT ENGINEER

BRIDGE NO. 34-0006L/R
KILOMETER POST 13.2/13.9

SAN FRANCISCO OAKLAND BAY BRIDGE
EAST SPAN SEISMIC SAFETY PROJECT
SELF-ANCHORED SUSPENSION BRIDGE
(SUPERSTRUCTURE & TOWER)

S1 & S2 NEW DESIGN: CONSTRUCTION DETAILS NO. 4

Rev. Date: 5-22-13

ORIGINAL SCALE IN MILLIMETERS FOR REDUCED PLANS 0 10 20 30 40 50 60 70 80 90 100

CU 04
EA 0120F1

DISREGARD PRINTS BEARING EARLIER REVISION DATES 07/01/13

REVISION DATES (PRELIMINARY STAGE ONLY)

SHEET 102523 OF

FILE => I:\bb\04-01200I\sas\contract plans and cco\cco\cco#331\1-original 07-01-13\dgn\aeplr33.dgn

100 % PS&E

USERNAME => msmith DATE PLOTTED => 03 JUL 2013 TIME PLOTTED => 14:36:01

DIST.	COUNTY	ROUTE	KILOMETER POST TOTAL PROJECT	SHEET NO.	TOTAL SHEETS
04	SF	80	13.2/13.9	519524	1204

REGISTERED ENGINEER - CIVIL

07-01-13

PLANS APPROVAL DATE

The State of California or its officers or agents shall not be responsible for the accuracy or completeness of electronic copies of this plan sheet.

REGISTERED PROFESSIONAL ENGINEER Marwan N. Nader No. C 054426 Exp. 12/31/13 CIVIL STATE OF CALIFORNIA

T.Y. LIN / MOFFATT & NICHOL
825 BATTERY STREET
SAN FRANCISCO, CA 94111

Caltrans now has a web site! To get to the web site, go to: http://www.dot.ca.gov

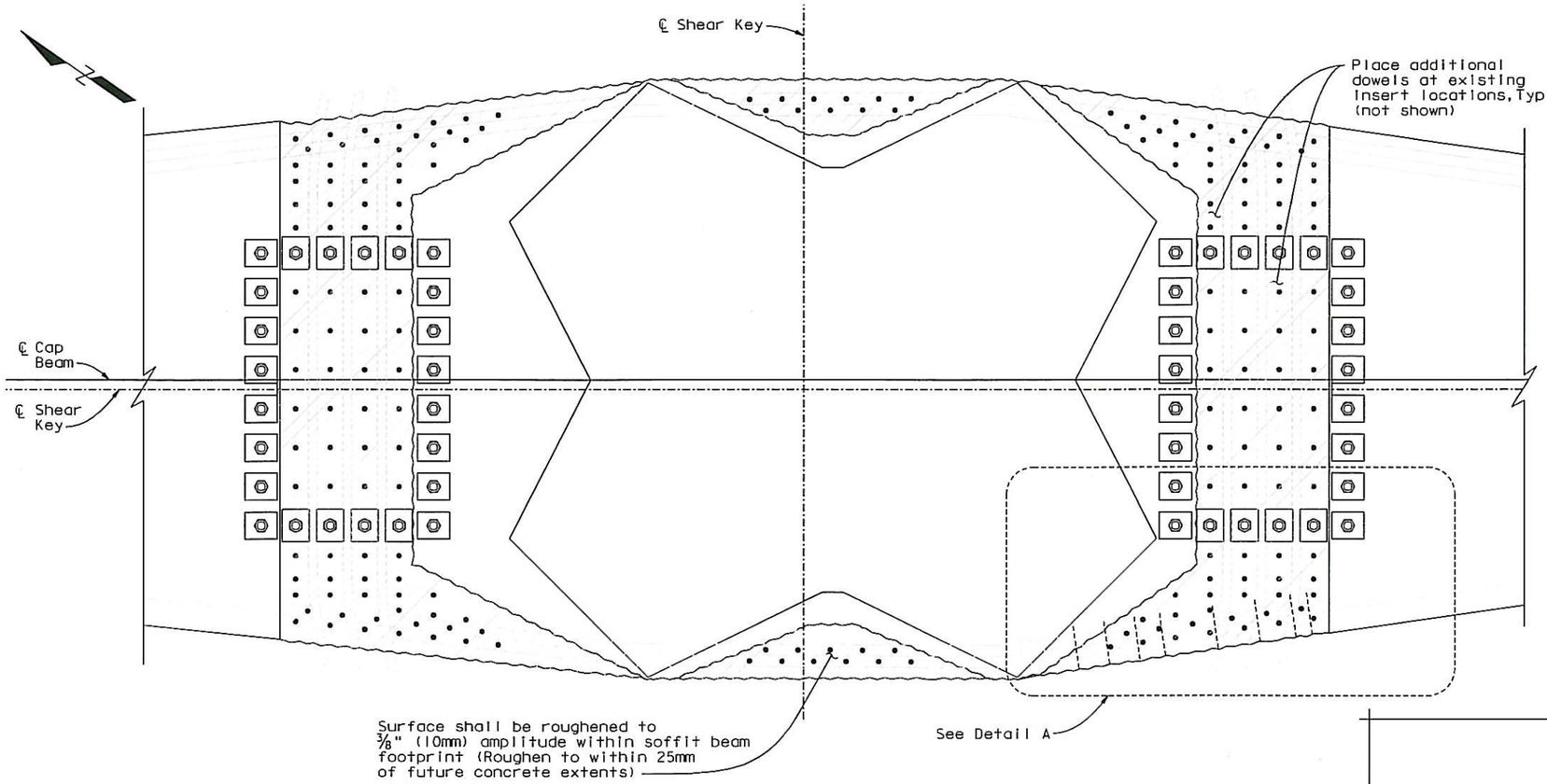

REFLECTED PLAN

1:25

LEGEND:

☐ Roughened Surface

• Typical Dowel

NOTES:

1. Dowels shall be embedded 350mm.
2. Adjust dowel locations near edge of cap beam to clear #43 reinforcement within cap beam and future dowels in cap beam wall.
3. Contractor shall mark locations of transverse tendons on soffit prior to drilling. Dowel locations may be adjusted to fit as built conditions.

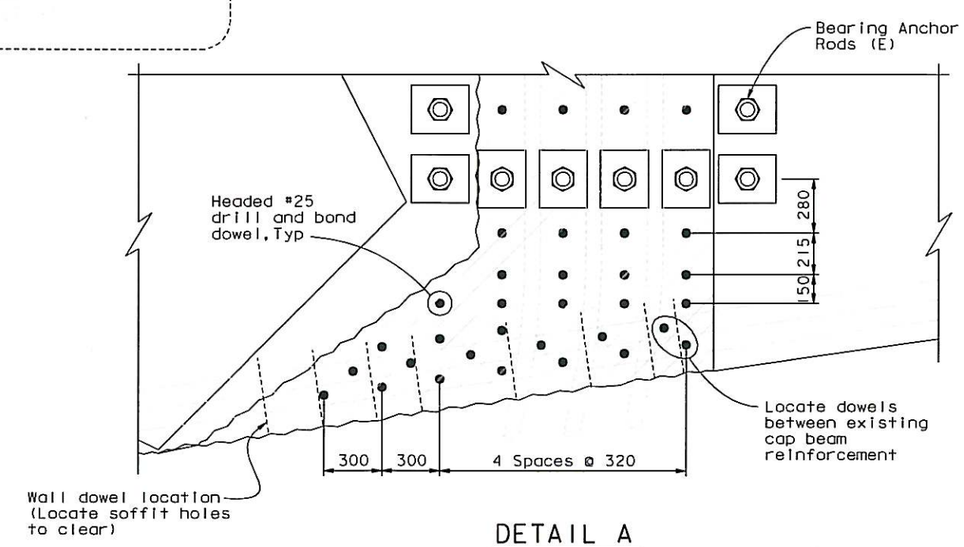

DETAIL A

1:15

(Other corners similar)

CONTRACT CHANGE ORDER NO. 331
SHEET 29 OF 36

REQUESTS FOR INFORMATION NOT ADDRESSED IN THIS CCO REMAIN IN FORCE

ALL DIMENSIONS ARE IN MILLIMETERS UNLESS OTHERWISE SHOWN

A. Akinsanya / W. Long
DESIGN OVERSIGHT
SIGN OFF DATE 07/01/13

MARK	DATE	DESCRIPTIONS	BY	CH'D	CCO#
0	07/01/13	PIER E2 PLANS	AS	MN	331

REVISIONS

	BY	CHECKED
DESIGN	A. Sanjines	S. Rodriguez
DETAILS	C. Hovell	H. Patel
QUANTITIES	N. Vo	J. Grove

PREPARED FOR THE STATE OF CALIFORNIA DEPARTMENT OF TRANSPORTATION

M. Nader
PROJECT ENGINEER

BRIDGE NO. 34-0006L/R
KILOMETER POST 13.2/13.9

SAN FRANCISCO OAKLAND BAY BRIDGE
EAST SPAN SEISMIC SAFETY PROJECT
SELF-ANCHORED SUSPENSION BRIDGE
(SUPERSTRUCTURE & TOWER)

S1 & S2 NEW DESIGN: CONSTRUCTION DETAILS NO.5

Rev. Date: 5-22-13

ORIGINAL SCALE IN MILLIMETERS FOR REDUCED PLANS 0 10 20 30 40 50 60 70 80 90 100

CU 04
EA 0120F1

DISREGARD PRINTS BEARING EARLIER REVISION DATES 07/01/13

REVISION DATES (PRELIMINARY STAGE ONLY)

SHEET 102524 OF

FILE => I:\bb\04-01200I\sas\contract plans and cco\cco\cco#331\1-original 07-01-13\dgn\aeplr34.dgn

100 % PS&E

USERNAME => msmith DATE PLOTTED => 03 JUL 2013 TIME PLOTTED => 14:35:34

DIST.	COUNTY	ROUTE	KILOMETER POST TOTAL PROJECT	SHEET NO.	TOTAL SHEETS
04	SF	80	13.2/13.9	519525	1204

REGISTERED ENGINEER - CIVIL

07-01-13

PLANS APPROVAL DATE

REGISTERED PROFESSIONAL ENGINEER Marwan N. Nader No. C 054426 Exp. 12/31/13 CIVIL STATE OF CALIFORNIA

The State of California or its officers or agents shall not be responsible for the accuracy or completeness of electronic copies of this plan sheet.

T.Y. LIN / MOFFATT & NICHOL
825 BATTERY STREET
SAN FRANCISCO, CA 94111

Caltrans now has a web site! To get to the web site, go to: http://www.dot.ca.gov

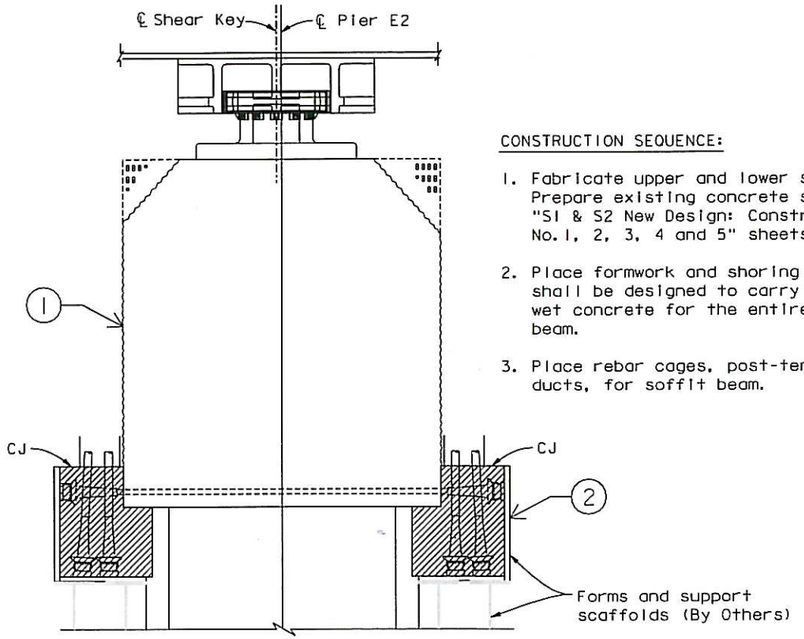

CONSTRUCTION SEQUENCE:

1. Fabricate upper and lower saddles (off-site); Prepare existing concrete surfaces per "S1 & S2 New Design: Construction Details No. 1, 2, 3, 4 and 5" sheets.

2. Place formwork and shoring supports. Shoring shall be designed to carry the full dead load of wet concrete for the entire jacket wall and soffit beam.

3. Place rebar cages, post-tensioning anchors, and ducts, for soffit beam.

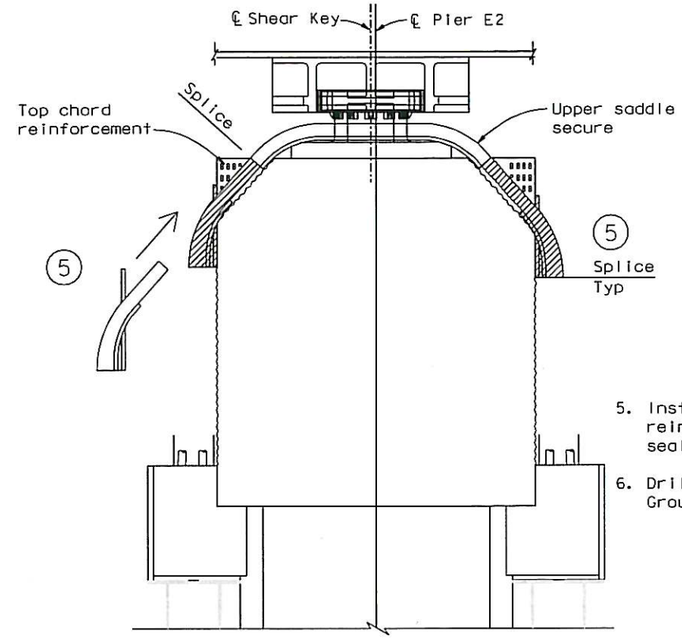

5. Install lower saddles by sliding assembly below existing reinforcement until splice is engaged. Tighten and fully seal splice joint.

6. Drill and engage expansion anchors for lower saddles. Grout saddle assemblies into place.

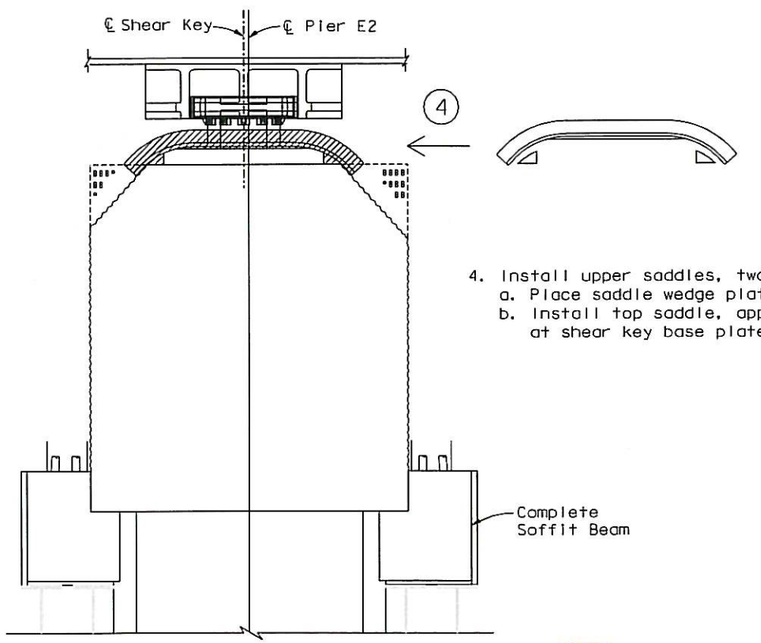

4. Install upper saddles, two per shear key:
   a. Place saddle wedge plates and bolt into place.
   b. Install top saddle, apply Sikadur 35 LV (or similar) at shear key base plate corner as needed (< 5mm).

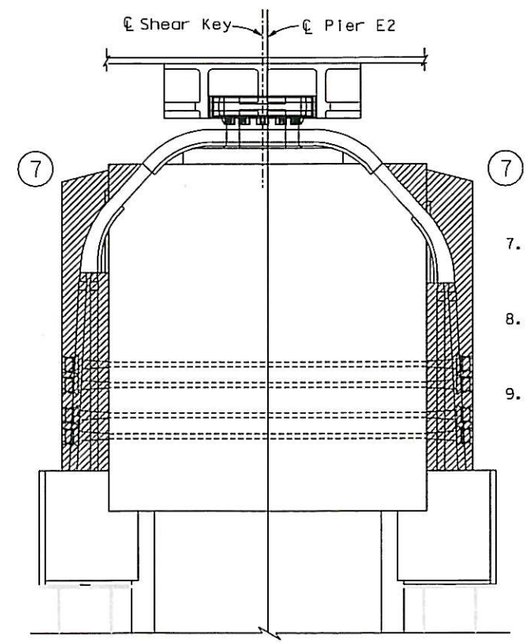

7. Place rebar cages, post-tensioning ducts, and anchors for concrete jacket wall. Form and cast concrete. Remove all side forms.

8. Install, stress, and grout all post-tensioned tendons per the post-tensioning sequence on "S1 & S2 New Design: Construction Details No. 7" sheet.

9. After completion of post tensioning operations, inspect boundaries between new and old concrete. Observed cracking and/or separations shall be filled with Sikadur 35 LV or similar, upon approval by the Engineer.

CONTRACT CHANGE ORDER NO. 331
SHEET 30 OF 36

REQUESTS FOR INFORMATION NOT ADDRESSED IN THIS CCO REMAIN IN FORCE

ALL DIMENSIONS ARE IN MILLIMETERS UNLESS OTHERWISE SHOWN

100 % PS&E

A. Akinsanya / W. Long
DESIGN OVERSIGHT
SIGN OFF DATE 07/01/13

MARK	DATE	DESCRIPTIONS	BY	CH'D	CCO#
0	07/01/13	PIER E2 PLANS	AS	MN	331

REVISIONS

DESIGN	BY A. Sanjines	CHECKED S. Rodriguez	
DETAILS	BY C. Hovell	CHECKED H. Patel	
QUANTITIES	BY N. Vo	CHECKED J. Grove	

PREPARED FOR THE STATE OF CALIFORNIA DEPARTMENT OF TRANSPORTATION

M. Nader
PROJECT ENGINEER

BRIDGE NO. 34-0006L/R
KILOMETER POST 13.2/13.9

SAN FRANCISCO OAKLAND BAY BRIDGE
EAST SPAN SEISMIC SAFETY PROJECT
SELF-ANCHORED SUSPENSION BRIDGE
(SUPERSTRUCTURE & TOWER)

S1 & S2 NEW DESIGN: CONSTRUCTION DETAILS NO.6

Rev. Date: 5-22-13

ORIGINAL SCALE IN MILLIMETERS FOR REDUCED PLANS 0 10 20 30 40 50 60 70 80 90 100

CU 04
EA 0120F1

DISREGARD PRINTS BEARING EARLIER REVISION DATES 07/01/13

REVISION DATES (PRELIMINARY STAGE ONLY)

SHEET 102525 OF

FILE => I:\bb\04-012001\sas\contract plans and cco\cco\cco#331\1-original 07-01-13\dgn\aeplr35.dgn

USERNAME => msmith DATE PLOTTED => 03 JUL 2013 TIME PLOTTED => 14:34:23

Global Stressing Order (See Note 1)	Tendon Group	Strands Per Tendon	Jacking Force (MN)
1 & 2	Bottom Longitudinal	12	2.34
	Transverse	12	2.34
3	Through-Cap*	19, 24	3.71, 4.69
4	Top Longitudinal	12	2.34
5	Draped Group 1	19	3.71
6	Vertical Layer A	26	5.08
7	Draped Group 2	19	3.71
8	Vertical Layer B	26	5.08

*24 Strand tendon is indicated by an asterisk.

(1) (2) Transverse & Bottom Longitudinal Tendons

a. Sufficient tails shall be left on all Transverse Tendons to allow for jacking from either end.
b. Alternate stressing end on tendons in the same transverse beam.

Stressing Order	Shear Key S1	Shear Key S2
1	B1T1	B2T1
2	B1T2	B2T2
3	B1T4	B2T4
4	B3T1	B4T1
5	B3T2	B4T2
6	B3T4	B4T4

c. Stressing of the Bottom Longitudinal Tendons may begin on either face of the cap beam.
d. Bottom Longitudinal Tendons may be stressed from either end.

Stressing Order	Tendon
1	BL2
2	BL1

Stressing Order	Shear Key S1	Shear Key S2
7	B1T3	B2T3
8	B1T5	B2T5
9	B1T6	B2T6
10	B3T3	B4T3
11	B3T5	B4T5
12	B3T6	B4T6

(3) Through-Cap Tendons

Stressing Order	Tendon
1	TC1B
2	TC2B
3	TC3B
4	TC4B
5	TC5B*
6	TC1A
7	TC2A
8	TC3A
9	TC1C
10	TC2C
11	TC3C

(4) Top Longitudinal Tendons

a. Top Longitudinal Tendons on either face of the cap beam may be stressed first.
b. Alternate stressing end for Top Longitudinal Tendons on the same side of the Cap Beam.

Stressing Order	Tendon
1	TL4
2	TL3
3	TL6
4	TL5
5	TL2
6	TL1
7	TL7
8	TL8

c. Prior to continuing to Step 5 in the stressing sequence:
   1. Bottom Longitundinal Tendons, Transverse Tendons, and Top Longitudinal Tendons TL1 though TL6 shall be grouted. Remaining Top Longitudinal Tendons may be grouted.
   2. Bottom Longitudinal Tendons and Through-Cap Tendons TC2B & TC3B shall reach stessing strength.
   3. Transverse Tendons, remaining Through-Cap Tendons, and Top Longitudinal Tendon TL6 shall reach initial set.

(5) Draped Tendons - Group 1

a. Stressing of the Draped Tendons may begin on either face of the cap beam.

Stressing Order	Tendon	Stressing End
1	DL4	North
2	DL2	South

b. Prior to continuing to Step 6 in the stressing sequence:
   1. All Top Longitudinal Tendons shall be grouted and shall reach initial set.
   2. Transverse Tendons and all Through-Cap Tendons shall reach stressing strength.

(6) Vertical Tendons - Layer A

a. Vertical Tendons shall be stressed from both ends simultaneously.

Stressing Order	Tendon	Side of Shear Key
1	A2**	North
2	A2**	South
3	A4**	South
4	A4**	North
5	A3	North
6	A3	South
7	A1	South
8	A1	North
9	A5	North
10	A5	South
11	A2**	South
12	A2**	North
13	A4**	North
14	A4**	South

** Tendons A2, A4 shall be initially stressed to 50% of the given jacking force. Stressing of Layer A tendons shall conclude by stressing tendons A2, A4 to 100% of the given jacking force.

(7) Draped Tendons - Group 2

a. Stressing of the Draped Tendons may begin on either face of the cap beam.

Stressing Order	Tendon	Stressing End
3	DL3	South
4	DL1	North

b. Prior to continuing to Step 8 in the stressing sequence:
   1. All Draped Tendons shall be grouted and shall reach initial set.
   2. Layer A Vertical Tendons shall be grouted and shall reach stressing strength.

(8) Vertical Tendons - Layer B

a. Vertical Tendons shall be stressed from both ends simultaneously.

Stressing Order	Tendon	Side of Shear Key
15	B2**	North
16	B2**	South
17	B4**	South
18	B4**	North
19	B3	North
20	B3	South
21	B1	South
22	B1	North
23	B5	North
24	B5	South
25	B2**	South
26	B2**	North
27	B4**	North
28	B4**	South

** Tendons B2, B4 shall be initially stressed to 50% of the given jacking force. Stressing of Layer B tendons shall conclude by stressing tendons B2, B4 to 100% of the given jacking force.

b. Layer B Vertical Tendons shall be grouted to complete the stressing operations.

NOTES:

1. Vertical support scaffolding shall be in place through the end of Step 3 of the post tensioning sequence.
2. Stressing sequence at S1 shown; S2 similar.
3. "Stressing strength" is defined as a compressive strength of grout exceeding 21 MPa. "Initial set" is defined as a compressive strength of grout exceeding 14 MPa.

Caltrans Metric

DIST.	COUNTY	ROUTE	KILOMETER POST TOTAL PROJECT	SHEET NO.	TOTAL SHEETS
04	SF	80	13.2/13.9	519S26	1204

REGISTERED ENGINEER - CIVIL
07-01-13
PLANS APPROVAL DATE
PROFESSIONAL ENGINEER REGISTERED Marwan N. Nader No. C 054426 Exp. 12/31/13 CIVIL STATE OF CALIFORNIA

The State of California or its officers or agents shall not be responsible for the accuracy or completeness of electronic copies of this plan sheet.

T.Y. LIN / MOFFATT & NICHOL
825 BATTERY STREET
SAN FRANCISCO, CA 94111

Caltrans now has a web site! To get to the web site, go to: http://www.dot.ca.gov

CONTRACT CHANGE ORDER NO. 331
SHEET 31 OF 36

REQUESTS FOR INFORMATION NOT ADDRESSED IN THIS CCO REMAIN IN FORCE

ALL DIMENSIONS ARE IN MILLIMETERS UNLESS OTHERWISE SHOWN

A. Akinsanya / W. Long
DESIGN OVERSIGHT
SIGN OFF DATE 07/01/13

MARK	DATE	DESCRIPTIONS	BY	CH'D	CCO#
0	07/01/13	PIER E2 PLANS	AS	MN	331

REVISIONS

DESIGN	BY A. Sanjines	CHECKED S. Rodriguez	
DETAILS	BY C. Hovell	CHECKED H. Patel	
QUANTITIES	BY N. Vo	CHECKED J. Grove	

PREPARED FOR THE STATE OF CALIFORNIA DEPARTMENT OF TRANSPORTATION

M. Nader
PROJECT ENGINEER

BRIDGE NO. 34-0006L/R
KILOMETER POST 13.2/13.9

SAN FRANCISCO OAKLAND BAY BRIDGE
EAST SPAN SEISMIC SAFETY PROJECT
SELF-ANCHORED SUSPENSION BRIDGE
(SUPERSTRUCTURE & TOWER)

S1 & S2 NEW DESIGN: CONSTRUCTION DETAILS NO. 7

Rev. Date: 5-22-13

ORIGINAL SCALE IN MILLIMETERS FOR REDUCED PLANS 0 10 20 30 40 50 60 70 80 90 100

CU 04
EA 0120F1

DISREGARD PRINTS BEARING EARLIER REVISION DATES 07/01/13

REVISION DATES (PRELIMINARY STAGE ONLY)

SHEET 02S26 OF

FILE => I:\bb\04-01200I\sas\contract plans and cco\cco\cco*331\I-original 07-01-13\dgn\aeplr36.dgn

100 % PS&E

USERNAME => msmith DATE PLOTTED => 03 JUL 2013 TIME PLOTTED => 14:33:30

DIST.	COUNTY	ROUTE	KILOMETER POST TOTAL PROJECT	SHEET NO.	TOTAL SHEETS
04	SF	80	13.2/13.9	915R3	1204

REGISTERED ENGINEER - CIVIL

12-6-04

PLANS APPROVAL DATE

The State of California or its officers or agents shall not be responsible for the accuracy or completeness of electronic copies of this plan sheet.

REGISTERED PROFESSIONAL ENGINEER Alex E. Sanjines No. C 051153 Exp. 9/30/13 CIVIL STATE OF CALIFORNIA

T.Y. LIN / MOFFATT & NICHOL
825 BATTERY STREET
SAN FRANCISCO, CA 94111

Caltrans now has a web site! To get to the web site, go to: http://www.dot.ca.gov

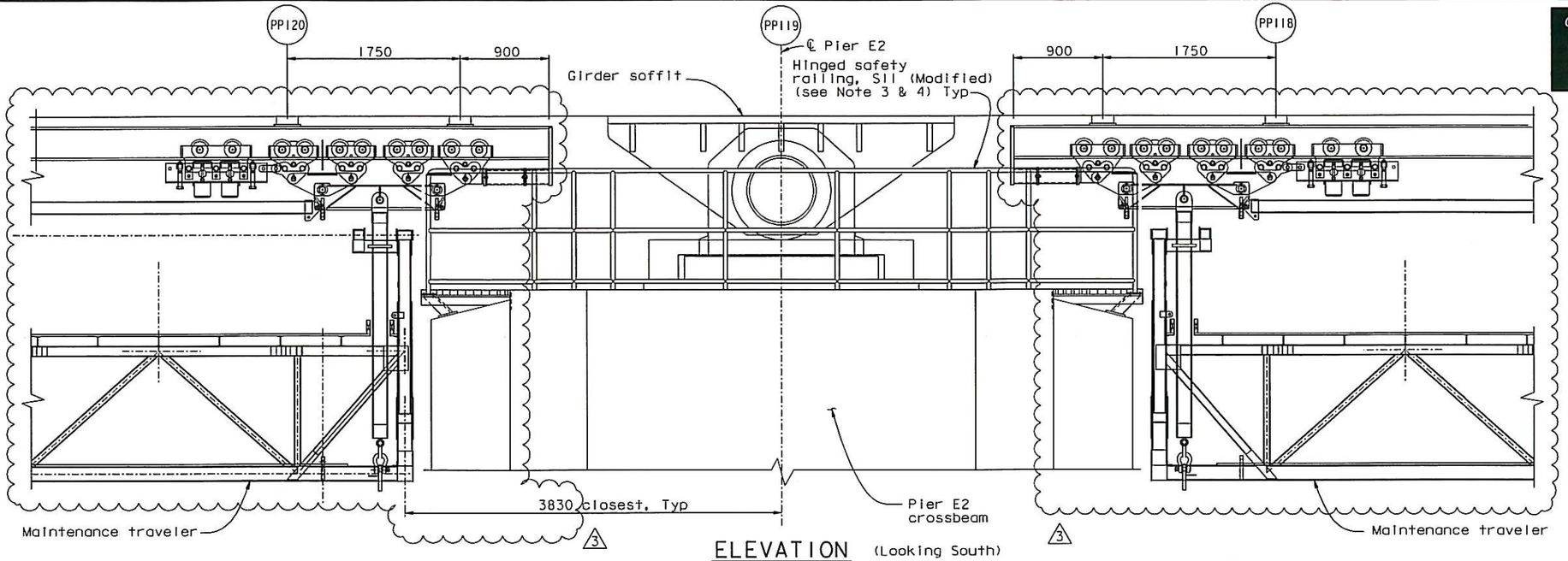

ELEVATION (Looking South)
1:25

NOTES:

1. For Detail A, see "Pier E2 access Details No. 2" sheet.
2. For typical hinged safety railing details, see "Revised Standard Plan RSP S11" sheet.
3. Pier E2 Capbeam Safety Cable Alternate Plan may be used, see "Pier E2 Access Details No. 3" sheet.
4. For rail spacing on S11 Modified railing, see "Tower Access Details No. 10" sheet.
5. Landing at "W" Line shown, "E" Line similar, opposite.

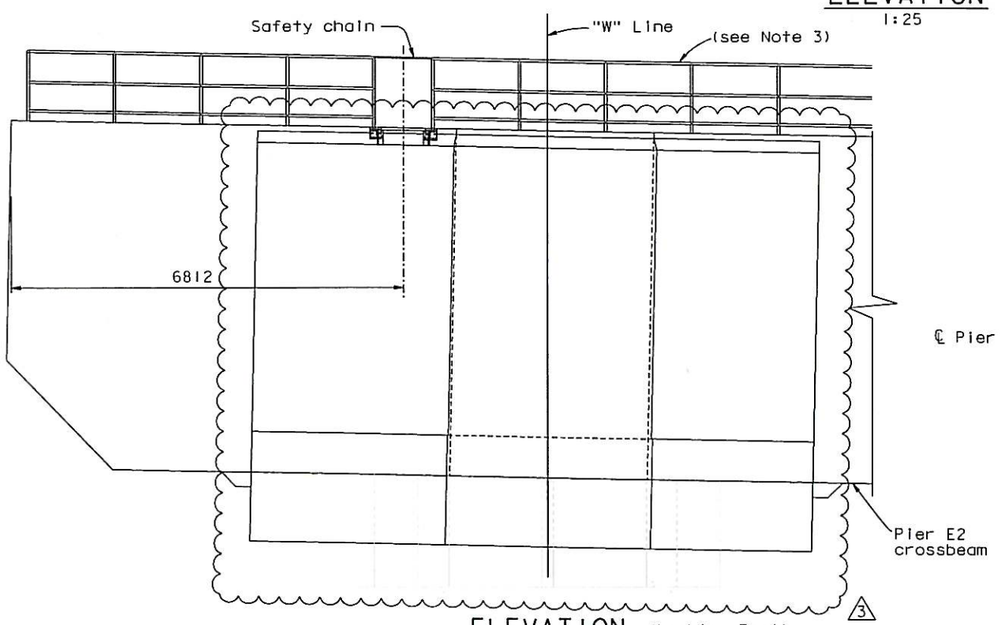

ELEVATION (Looking East)
1:50

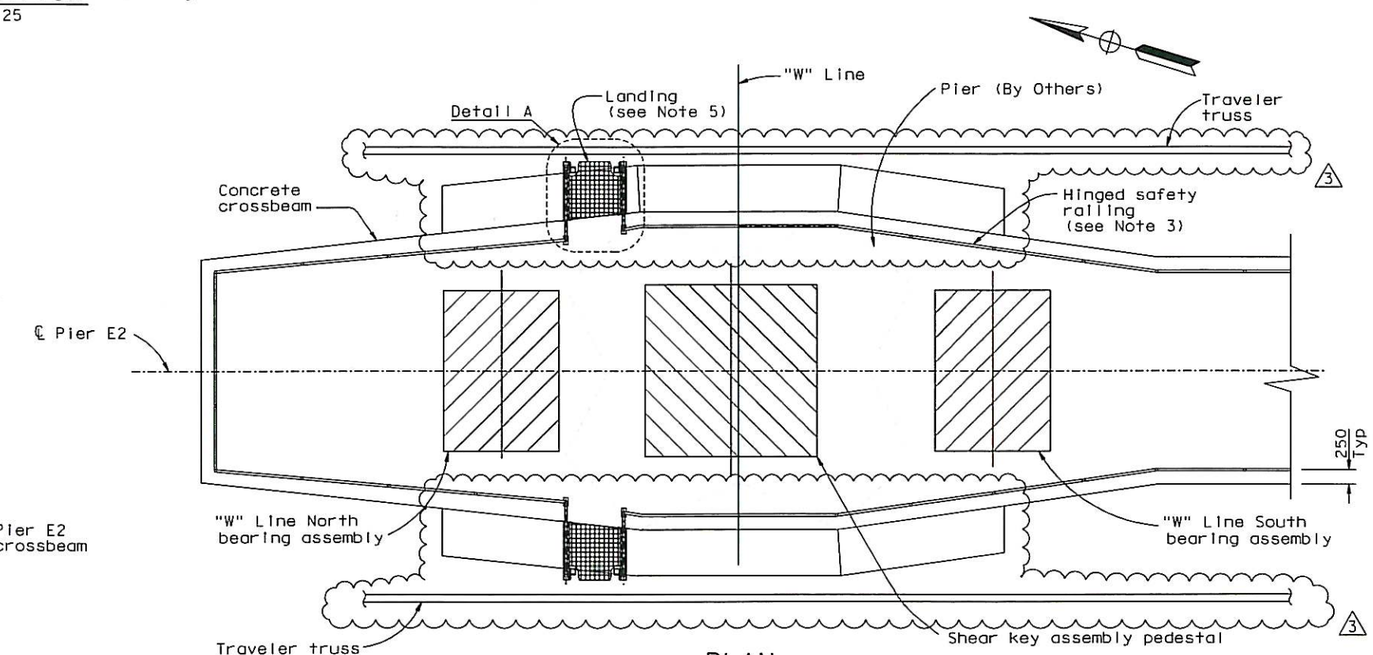

PLAN
1:50

CONTRACT CHANGE ORDER NO. 331
SHEET 32 OF 360

REQUESTS FOR INFORMATION NOT ADDRESSED IN THIS CCO REMAIN IN FORCE

MARK	DATE	DESCRIPTIONS	BY	CH'D	CCO#
3	01/25/13	PIER E2 PLANS	AS	JD	331
2	02/01/11	PIER E2 CAPBEAM SAFETY CABLE	CC	AS	181
1	06/12/09	HANDRAIL	TH	AS	114

REVISIONS

R. Valizadeh/V. Toan/Y. L./W. L./F. C.
DESIGN OVERSIGHT
Roya Valizadeh / Vong Toan / Y. Liu
SIGN OFF DATE 07/25/13

Rev. Date: 5-15-98

	BY		CHECKED
DESIGN	A. Sanjines		T. Ho
DETAILS	R. Xu		N. Vo
QUANTITIES	A. Sanjines		N. Vo

PREPARED FOR THE STATE OF CALIFORNIA DEPARTMENT OF TRANSPORTATION

ORIGINAL SCALE IN MILLIMETERS FOR REDUCED PLANS 0 10 20 30 40 50 60 70 80 90 100

ALL DIMENSIONS ARE IN MILLIMETERS UNLESS OTHERWISE SHOWN

R. Manzanarez
PROJECT ENGINEER

BRIDGE NO. 34-0006L/R
KILOMETER POST 13.2/13.9

CU 04
EA 0120F1

DISREGARD PRINTS BEARING EARLIER REVISION DATES

SAN FRANCISCO OAKLAND BAY BRIDGE
EAST SPAN SEISMIC SAFETY PROJECT
SELF-ANCHORED SUSPENSION BRIDGE
(SUPERSTRUCTURE & TOWER)

PIER E2 ACCESS DETAILS NO. 1

REVISION DATES (PRELIMINARY STAGE ONLY) 06/26/09 05/24/10 06/28/12 01/24/12 12/14/12 12/01/05

SHEET 498R3 OF

FILE => L:\BB\04-012001\SAS\Contract Plans and CCO\CCO\CCO#331\3-Revision 07-25-13\DGN\akaccl1.dgn

100 % PS&E

USERNAME => DWinrow DATE PLOTTED => 25 JUL 2013 TIME PLOTTED => 14:18:48

DIST.	COUNTY	ROUTE	KILOMETER POST TOTAL PROJECT	SHEET NO.	TOTAL SHEETS
04	SF	80	13.2/13.9	916R1	1204

REGISTERED ENGINEER - CIVIL

12-6-04

PLANS APPROVAL DATE

REGISTERED PROFESSIONAL ENGINEER Alex E. Sanjines No. C 051153 Exp. 9/30/13 CIVIL STATE OF CALIFORNIA

The State of California or its officers or agents shall not be responsible for the accuracy or completeness of electronic copies of this plan sheet.

T.Y. LIN / MOFFATT & NICHOL
825 BATTERY STREET
SAN FRANCISCO, CA 94111

Caltrans now has a web site! To get to the web site, go to: http://www.dot.ca.gov

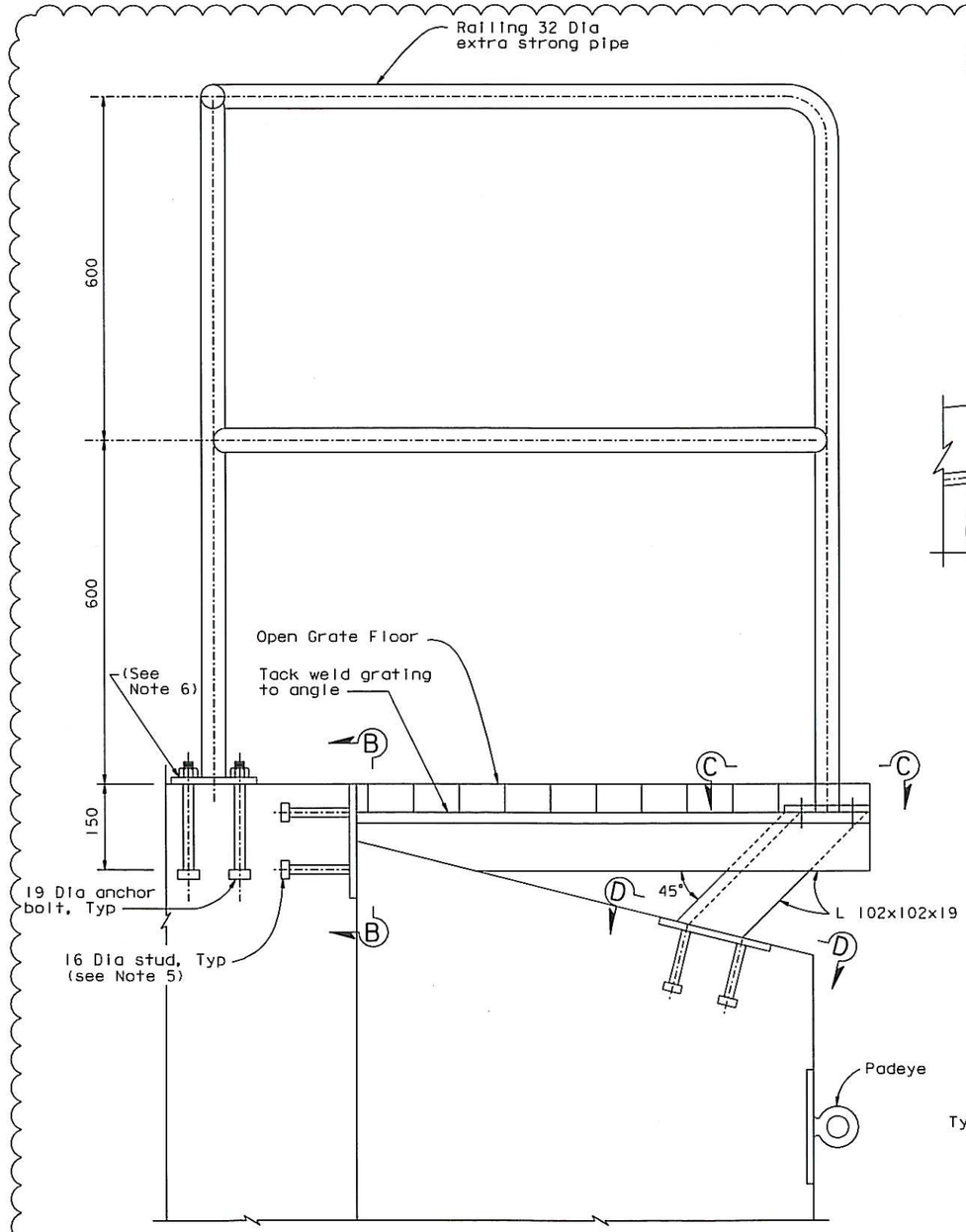

SECTION A-A
1:5

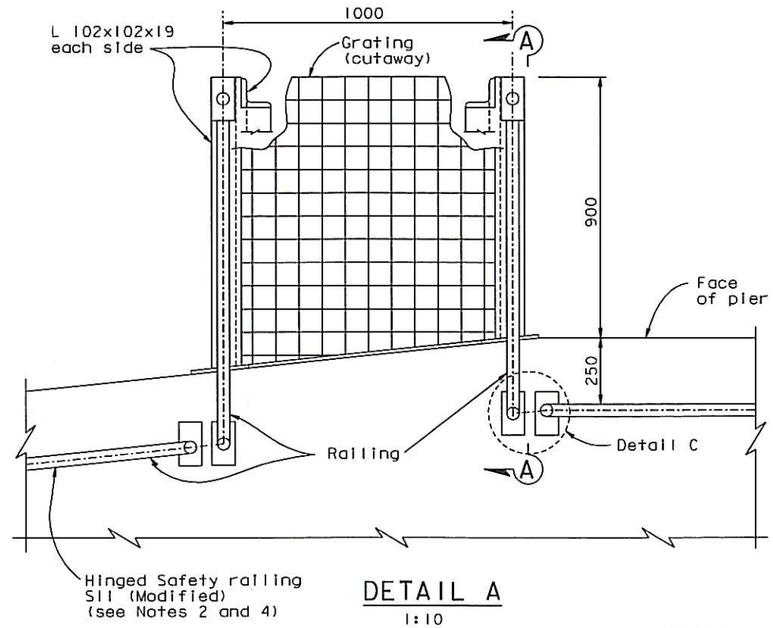

DETAIL A
1:10

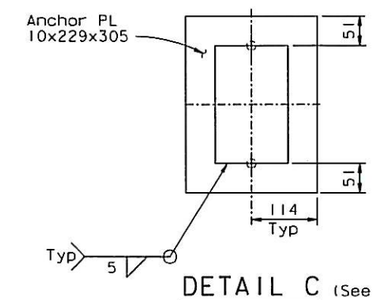

DETAIL C (See Note 6)
1:5

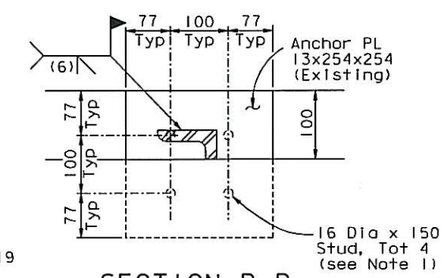

SECTION B-B
1:5

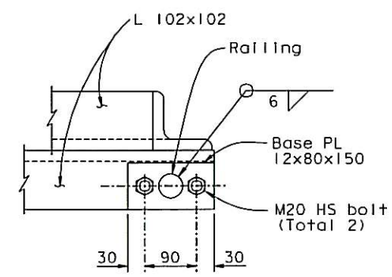

SECTION C-C
1:5

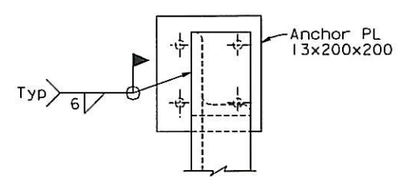

SECTION D-D
1:5

NOTES:

1. Adjust location of studs as necessary to clear pier reinforcement.
2. For S11 Modified railing, see "Roads Plans" and "Tower Access Details No. 10" sheet.
3. Substitution of material permitted subject to the Engineer's review and approval.
4. 10 mm Dia A307 concrete anchor bolts shall be used to anchor S11 modified railing box plates to E2 crossbeam.
5. 20 mm Dia threaded rods with couplers may be used in lieu of embedded anchor plates with anchor studs/bolts subject to review and approval of the Engineer.
6. At the Contractor's option, Detail C may be used for the hinged safety railing and for the Pier E2 traveler landing railing, subject to review and approval of the Engineer.

CONTRACT CHANGE ORDER NO. 331
SHEET 33 OF 316

REQUESTS FOR INFORMATION NOT ADDRESSED IN THIS CCO REMAIN IN FORCE

ALL DIMENSIONS ARE IN MILLIMETERS UNLESS OTHERWISE SHOWN

R. Valizadeh/V. Toan/Y.L./W.L./F.C.
DESIGN OVERSIGHT
SIGN OFF DATE 07/29/13

MARK	DATE	DESCRIPTIONS	BY	CH'D	CCO#
1	07/25/13	PIER E2 PLANS	AS	JD	331

REVISIONS

DESIGN	BY A. Sanjines	CHECKED T. Ho	
DETAILS	BY R. Xu	CHECKED N. Vo	
QUANTITIES	BY A. Sanjines	CHECKED N. Vo	

PREPARED FOR THE STATE OF CALIFORNIA DEPARTMENT OF TRANSPORTATION

R. Manzanarez
PROJECT ENGINEER

BRIDGE NO. 34-0006L/R
KILOMETER POST 13.2/13.9

SAN FRANCISCO OAKLAND BAY BRIDGE
EAST SPAN SEISMIC SAFETY PROJECT
SELF-ANCHORED SUSPENSION BRIDGE
(SUPERSTRUCTURE & TOWER)

PIER E2 ACCESS DETAILS NO. 2

Rev. Date: 5-18-98

ORIGINAL SCALE IN MILLIMETERS FOR REDUCED PLANS 0 10 20 30 40 50 60 70 80 90 100

CU 04
EA 0120F1

DISREGARD PRINTS BEARING EARLIER REVISION DATES

REVISION DATES (PRELIMINARY STAGE ONLY) 04/06/12 01/04/12 12/19/12

SHEET 499R1 OF

FILE => L:\BB\04-012001\SAS\Contract Plans and CCO\CCO\CCO#331\3-Revision 07-25-13\DGN\akacc12a.dgn

100% PS&E

USERNAME => arivera DATE PLOTTED => 26 JUL 2013 TIME PLOTTED => 11:32:19

DIST.	COUNTY	ROUTE	KILOMETER POST TOTAL PROJECT	SHEET NO.	TOTAL SHEETS
04	SF	80	13.2/13.9	916S3	1204

REGISTERED ENGINEER - CIVIL

07-25-13

PLANS APPROVAL DATE

REGISTERED PROFESSIONAL ENGINEER Alex E. Sanjines No. C 051153 Exp. 9/30/13 CIVIL STATE OF CALIFORNIA

The State of California or its officers or agents shall not be responsible for the accuracy or completeness of electronic copies of this plan sheet.

T.Y. LIN / MOFFATT & NICHOL
825 BATTERY STREET
SAN FRANCISCO, CA 94111

Caltrans now has a web site! To get to the web site, go to: http://www.dot.ca.gov

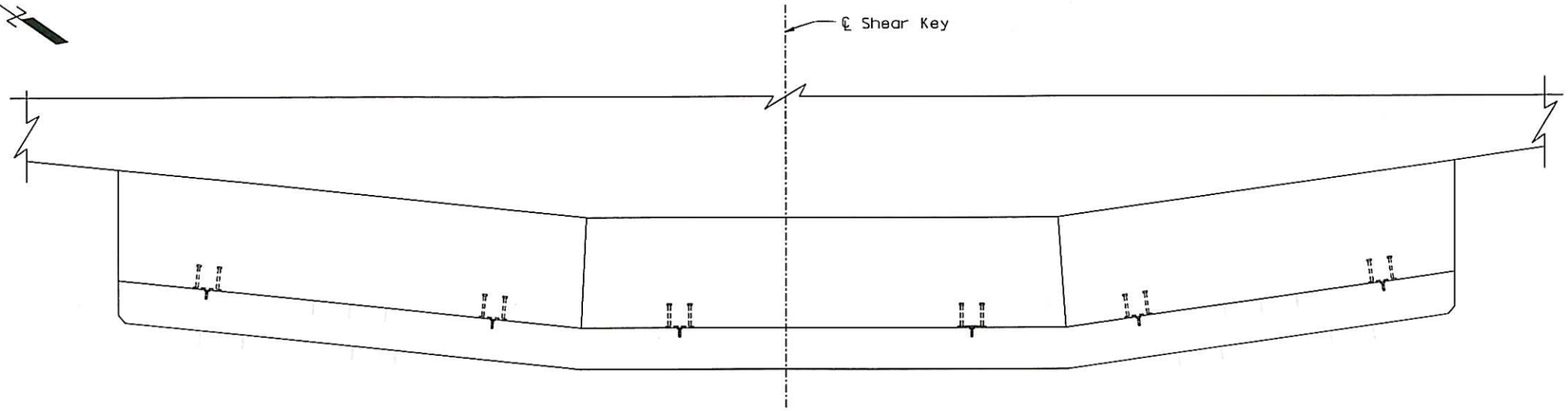

PLAN VIEW
1:20

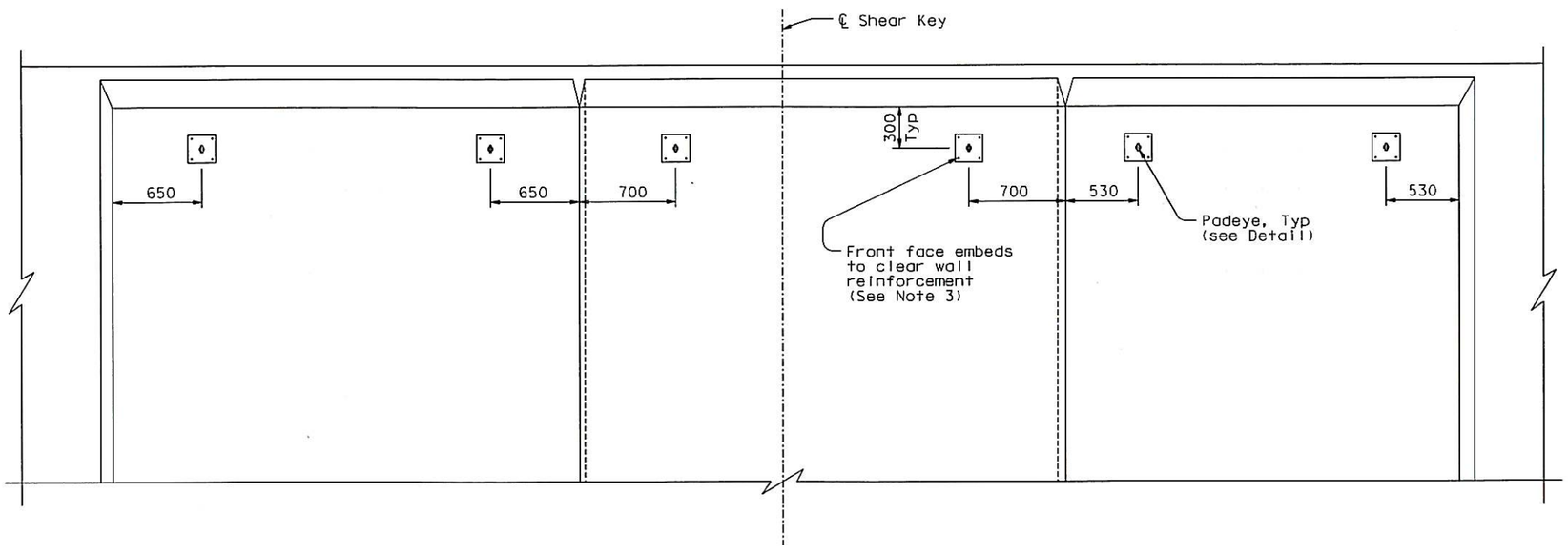

PIER E2 DEVELOPED ELEVATION
1:20

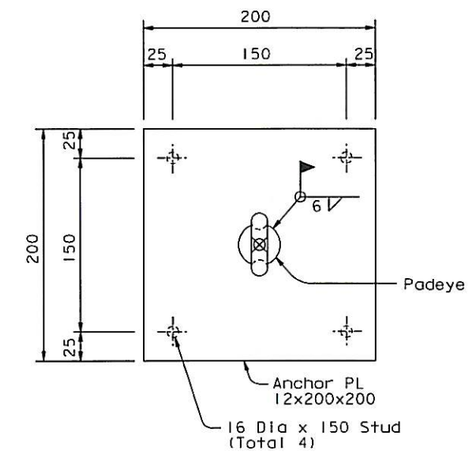

PADEYE DETAIL
1:2.5

NOTES:

1. Anchor plate shall have a minimum yield strength of Fy=345 MPa (50 ksi) and shall be A572 or equal.
2. Padeye shall be Crosby Size No.5 or equivalent.
3. Anchor plate shall be embedded in concrete.

CONTRACT CHANGE ORDER NO. 331
SHEET 34 OF 36

REQUESTS FOR INFORMATION NOT ADDRESSED IN THIS CCO REMAIN IN FORCE

ALL DIMENSIONS ARE IN MILLIMETERS UNLESS OTHERWISE SHOWN

DESIGN OVERSIGHT: A. Akinsanya / W. Long
SIGN OFF DATE 07/25/13

MARK	DATE	DESCRIPTIONS	BY	CH'D	CCO#
0	07/25/13	PIER E2 PLANS	AS	JD	331

REVISIONS

DESIGN	BY A. Sanjines	CHECKED S. Rodriguez	
DETAILS	BY C. Howell	CHECKED H. Patel	
QUANTITIES	BY N. Vo	CHECKED J. Grove	

PREPARED FOR THE STATE OF CALIFORNIA DEPARTMENT OF TRANSPORTATION

M. Nader
PROJECT ENGINEER

BRIDGE NO. 34-0006L/R
KILOMETER POST 13.2/13.9

SAN FRANCISCO OAKLAND BAY BRIDGE
EAST SPAN SEISMIC SAFETY PROJECT
SELF-ANCHORED SUSPENSION BRIDGE
(SUPERSTRUCTURE & TOWER)

PIER E2 ACCESS DETAILS NO.5

Rev. Date: 5-22-13

ORIGINAL SCALE IN MILLIMETERS FOR REDUCED PLANS 0 10 20 30 40 50 60 70 80 90 100

CU 04
EA 0120F1

DISREGARD PRINTS BEARING EARLIER REVISION DATES 07/25/13

REVISION DATES (PRELIMINARY STAGE ONLY)

SHEET 49953 OF

FILE => I:\bb\04-012001\sas\contract plans and cco\cco\cco#331\3-revision 07-25-13\dgn\akacc12e.dgn

100 % PS&E

USERNAME => DWinrow DATE PLOTTED => 25 JUL 2013 TIME PLOTTED => 14:21:03

DIST.	COUNTY	ROUTE	KILOMETER POST TOTAL PROJECT	SHEET NO.	TOTAL SHEETS
04	SF	80	13.2/13.9	91654	1204

REGISTERED ENGINEER - CIVIL

07-25-13

PLANS APPROVAL DATE

REGISTERED PROFESSIONAL ENGINEER Alex E. Sanjines No. C 051153 Exp. 9/30/13 CIVIL STATE OF CALIFORNIA

The State of California or its officers or agents shall not be responsible for the accuracy or completeness of electronic copies of this plan sheet.

T.Y. LIN / MOFFATT & NICHOL
825 BATTERY STREET
SAN FRANCISCO, CA 94111

Caltrans now has a web site! To get to the web site, go to: http://www.dot.ca.gov

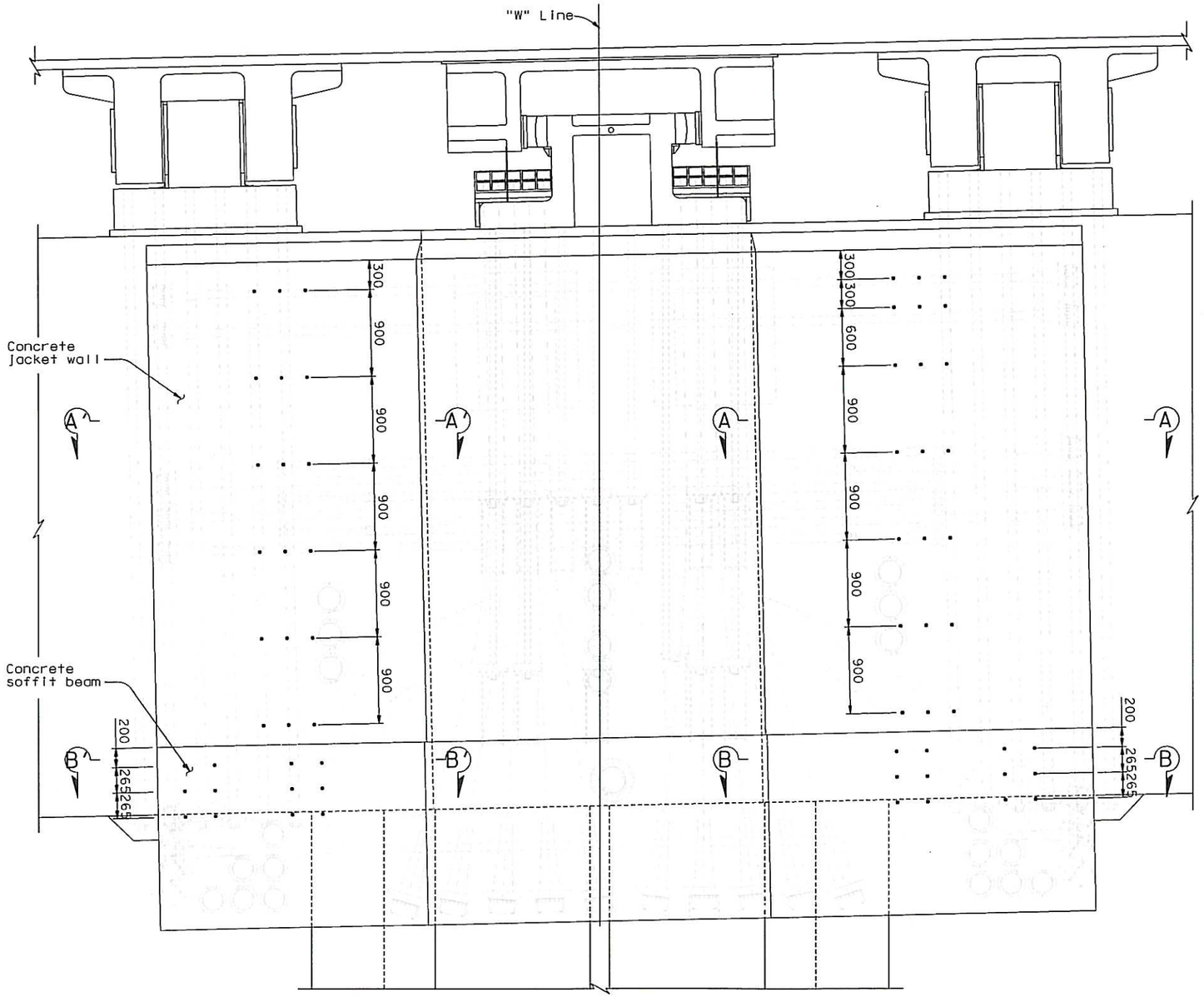

PIER E2 ELEVATION (See Note 1)

1:25

(East Face, Looking West, "W" Line Shown, "E" Line Similar)

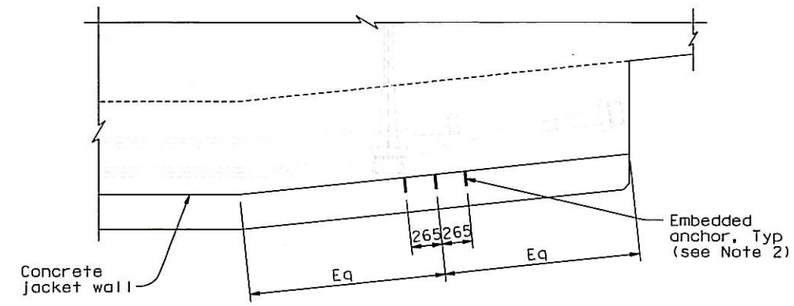

SECTION A-A (A'-A' Opp Hand)

1:25

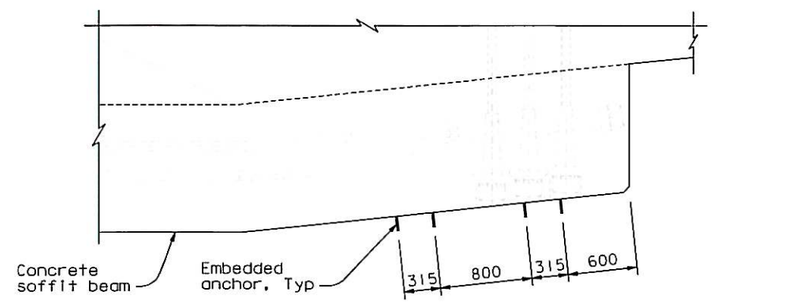

SECTION B-B (B'-B' Opp Hand)

1:25

LEGEND:

- Embedded Anchor

NOTES:

1. Dimensions are measured along lines perpendicular to the top face of Pier E2.
2. Anchor shall be ASTM A307 hot dip galvanized 9.5 Dia threaded rod with 102 minimum embedment into concrete. Provide double nut at embedded end and 64 mm protrusion beyond face of concrete Jacket wall, Typ.

CONTRACT CHANGE ORDER NO. 331
SHEET 35 OF 36

REQUESTS FOR INFORMATION NOT ADDRESSED IN THIS CCO REMAIN IN FORCE

ALL DIMENSIONS ARE IN MILLIMETERS UNLESS OTHERWISE SHOWN

A. Akinsanya / W. Long
DESIGN OVERSIGHT
SIGN OFF DATE 07/25/13

MARK	DATE	DESCRIPTIONS	BY	CH'D	CCO#
0	01/25/13	PIER E2 PLANS	AS	JD	331

REVISIONS

DESIGN	BY A. Sanjines	CHECKED S. Rodriguez	
DETAILS	BY C. Hovell	CHECKED H. Patel	
QUANTITIES	BY N. Vo	CHECKED J. Grove	

PREPARED FOR THE STATE OF CALIFORNIA DEPARTMENT OF TRANSPORTATION

M. Nader
PROJECT ENGINEER

BRIDGE NO. 34-0006L/R
KILOMETER POST 13.2/13.9

SAN FRANCISCO OAKLAND BAY BRIDGE
EAST SPAN SEISMIC SAFETY PROJECT
SELF-ANCHORED SUSPENSION BRIDGE
(SUPERSTRUCTURE & TOWER)

PIER E2 ACCESS DETAILS NO. 6

Rev. Date: 5-22-13

ORIGINAL SCALE IN MILLIMETERS FOR REDUCED PLANS 0 10 20 30 40 50 60 70 80 90 100

CU 04
EA 0120F1

DISREGARD PRINTS BEARING EARLIER REVISION DATES 01/25/13

REVISION DATES (PRELIMINARY STAGE ONLY)

SHEET 499S4 OF

FILE => L:\BB\04-012001\SAS\Contract Plans and CCO\CCO\CCO#331\3-Revision 07-25-13\DGN\akacc12f.dgn

100 % PS&E

USERNAME => arivera DATE PLOTTED => 26 JUL 2013 TIME PLOTTED => 11:41:38

DIST.	COUNTY	ROUTE	KILOMETER POST TOTAL PROJECT	SHEET NO.	TOTAL SHEETS
04	SF	80	13.2/13.9	1120R5	1204

Caltrans Metric

George Baker
REGISTERED ENGINEER - CIVIL
12-6-04
PLANS APPROVAL DATE

REGISTERED PROFESSIONAL ENGINEER George S. Baker No. C 57112 Exp. 12/31/05 CIVIL STATE OF CALIFORNIA

The State of California or its officers or agents shall not be responsible for the accuracy or completeness of electronic copies of this plan sheet.

T.Y. LIN / MOFFATT & NICHOL
825 BATTERY STREET
SAN FRANCISCO, CA 94111

Caltrans now has a web site! To get to the web site, go to: http://www.dot.ca.gov

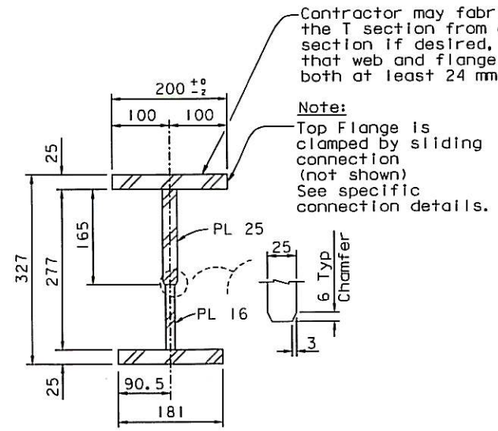

RAIL SECTION AT SLIDING JOINTS
SECTION A-A
1:5

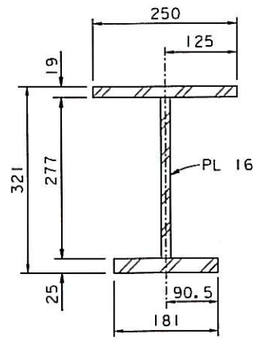

TYPICAL RAIL SECTION
SECTION B-B
1:5

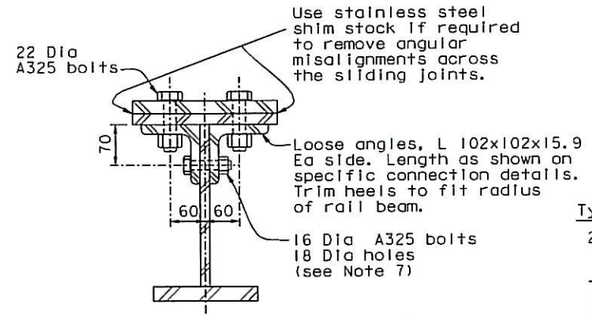

RAIL SECTION AT FIXED JOINTS
SECTION C-C
1:5

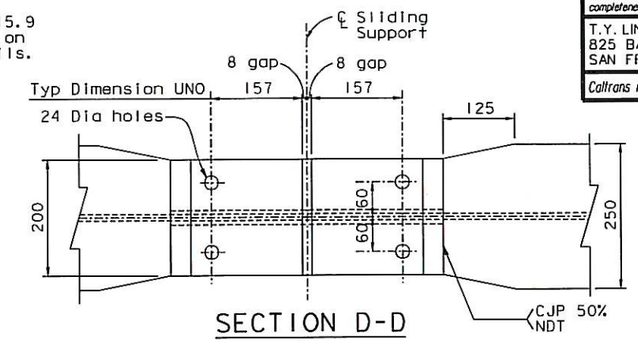

SECTION D-D
1:5

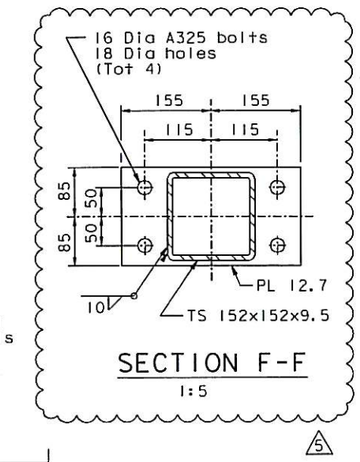

SECTION F-F
1:5

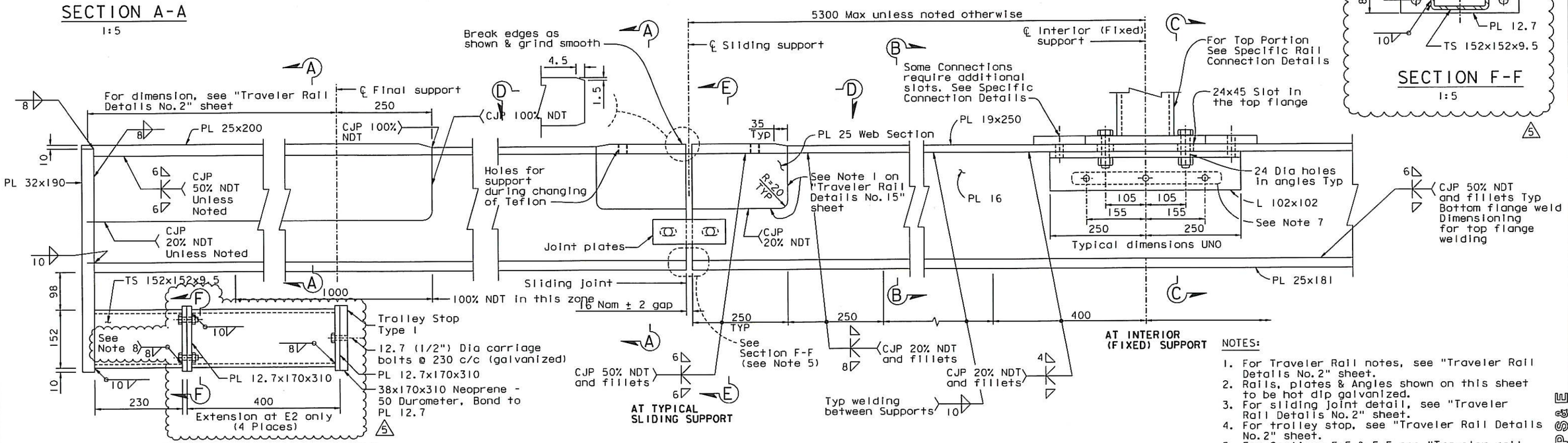

DETAIL AT RAIL ENDS

TRAVELER RAIL TYPICAL FABRICATION
1:5

NOTES:

1. For Traveler Rail notes, see "Traveler Rail Details No.2" sheet.
2. Rails, plates & Angles shown on this sheet to be hot dip galvanized.
3. For sliding joint detail, see "Traveler Rail Details No.2" sheet.
4. For trolley stop, see "Traveler Rail Details No.2" sheet.
5. For Sections E-E & F-F see "Traveler rail Details No.15" sheet.
6. For required tolerances on flange cuts see "Traveler Rail Details No.2" sheet.
7. At the Contractor's option, an 18x40 slotted hole may be used on the web of the traveler rail at the fixed supports.
8. Increase weld to 10, sides and bottom. (5)

CONTRACT CHANGE ORDER NO. 331
SHEET 36 OF 36

REGISTERED PROFESSIONAL ENGINEER Marwan N. Nader No. C 054426 Exp. 12/31/13 CIVIL STATE OF CALIFORNIA

FOR REVISIONS ONLY

REQUESTS FOR INFORMATION NOT ADDRESSED IN THIS CCO REMAIN IN FORCE

MARK	DATE	DESCRIPTIONS	BY	CH'D	CCO#
5	07/25/13	PIER E2 PLANS	AS	MN	331
4	09/15/10	TRAVELER RAIL TOLERANCES	MN	GB	168
3	05/18/09	TRAVELER RAIL MODIFICATIONS	MN	GB	2450
2	07/20/07	RAIL CHANGE & MISCELLANEOUS DETAILS	GB	NV	24
1	08/04/06	TRAVELER RAILS	GB	NV	24

REVISIONS

REVISION 3 SUPERSEDES REVISIONS 1 & 2

ALL DIMENSIONS ARE IN MILLIMETERS UNLESS OTHERWISE SHOWN

R. Vallizadeh/V. Toan/Y.L./W.L./F.C.
DESIGN OVERSIGHT
Roya Vallizadeh / Vong Toan / Y. Liu
SIGN OFF DATE 07/29/13

Rev. Date: 5-18-08

	BY	CHECKED
DESIGN	J. Otter	G. Baker
DETAILS	J. Otter	M. Roberts
QUANTITIES	J. Otter	M. Roberts

PREPARED FOR THE STATE OF CALIFORNIA DEPARTMENT OF TRANSPORTATION

R. Manzanarez
PROJECT ENGINEER

BRIDGE NO. 34-0006L/R
KILOMETER POST 13.2/13.9

SAN FRANCISCO OAKLAND BAY BRIDGE
EAST SPAN SEISMIC SAFETY PROJECT
SELF-ANCHORED SUSPENSION BRIDGE
(SUPERSTRUCTURE & TOWER)

TRAVELER RAIL DETAILS NO. 1

ORIGINAL SCALE IN MILLIMETERS FOR REDUCED PLANS 0 10 20 30 40 50 60 70 80 90 100

CU 04
EA 0120F1

DISREGARD PRINTS BEARING EARLIER REVISION DATES 01/25/02 01/07/02 12/19/02

SHEET 703R5 OF

FILE => I:\bb\04-01200I\sas\contract plans and cco\cco\cco=331\3-revision 07-25-13\dgn\aktrvl12.dgn

100 % PS&E

USERNAME => DWinrow DATE PLOTTED => 25 JUL 2013 TIME PLOTTED => 14:22:52