**DEPARTMENT OF TRANSPORTATION – District 4 Toll Bridge**
**333 Burma Rd.**
**Oakland, CA 94607**
**Telephone (510) 286-0500 Fax (510) 286-0550**

# LETTER OF TRANSMITTAL

To: 375 BURMA ROAD
OAKLAND CA 95607

Attn: Brian Petersen

Subject: CCO 331 Pier E2 Plans ATPed Plan Sheets

Date: July 09, 2013

Contract No: 04-0120F4
04-SF-80-13.2/ 13.9

Job Name: Self-Anchored Suspension Bridge

Transmittal No.: 05.03.02-001917

**Enclosed please find the following items:**

| | | | | | |
|---|---|---|---|---|---|
| | Shop Drawings | | Change Order | | Submittal(s) |
| | WSWD Report(s) | X | Plans | X | Other |
| | Daily Extra Work Reports | | Progress Payment | | Certified Payroll |
| | RFI | | State Letter | | Certificates of Compliance |

| Item | Copies | Sheets | Description | Dated |
|---|---|---|---|---|
| 1 | 1 | 27 | CCO 331 Pier E2 Plans | 09-Jul-2013 |
| 2 | 1 | 2 | CCO 331 Transmittal Item Report | 09-Jul-2013 |

**These Are Transmitted As Checked Below:**

| | | | | | | | |
|---|---|---|---|---|---|---|---|
| | For Approval or Action | | Approved as submitted | | Resubmit | ___ | Copies for approval |
| X | For Your Use | | Approved as Noted | | Submit | ___ | Copies for distribution |
| | As Requested | | Returned for Corrections | | Return | ___ | Corrected prints |
| | For Review & Comment | | Other | | Sign and Return | | |

**Remarks:**
Attached are 27 Plan Sheets that are to be incorporated into CCO 331, Pier E2 Plans.

An 11 x 17 copy of these plan sheets, as well as a Detailed Plan Sheet Summary Report listing ALL 27 Plan Sheets in CCO 331, are attached to this transmittal for reference.

These plan sheets have been placed into the PMIV Plan Sheet Library.

A letter of Authority to Proceed for these plan sheets under CCO 331 was transmitted to ABFJV, dated July 08, 2013 under Letter 05.03.01-011899.

Please feel free to contact us if you have any questions on this matter.

**Signed:** _____
Joe Garcia
CCO Engineer

Copy To: Bill Casey, Stanley Ku, Darryl Schram
File: 05.03.02, 49.331

| DIST. | COUNTY | ROUTE | KILOMETER POST TOTAL PROJECT | SHEET NO. | TOTAL SHEETS |
|---|---|---|---|---|---|
| 04 | SF | 80 | 13.2/13.9 | 519S1 | 1204 |

REGISTERED ENGINEER - CIVIL

07-01-13

PLANS APPROVAL DATE

*The State of California or its officers or agents shall not be responsible for the accuracy or completeness of electronic copies of this plan sheet.*

REGISTERED PROFESSIONAL ENGINEER Marwan N. Nader No. C 054426 Exp. 12/31/13 CIVIL STATE OF CALIFORNIA

T.Y. LIN / MOFFATT & NICHOL
825 BATTERY STREET
SAN FRANCISCO, CA 94111

*Caltrans now has a web site! To get to the web site, go to: http://www.dot.ca.gov*

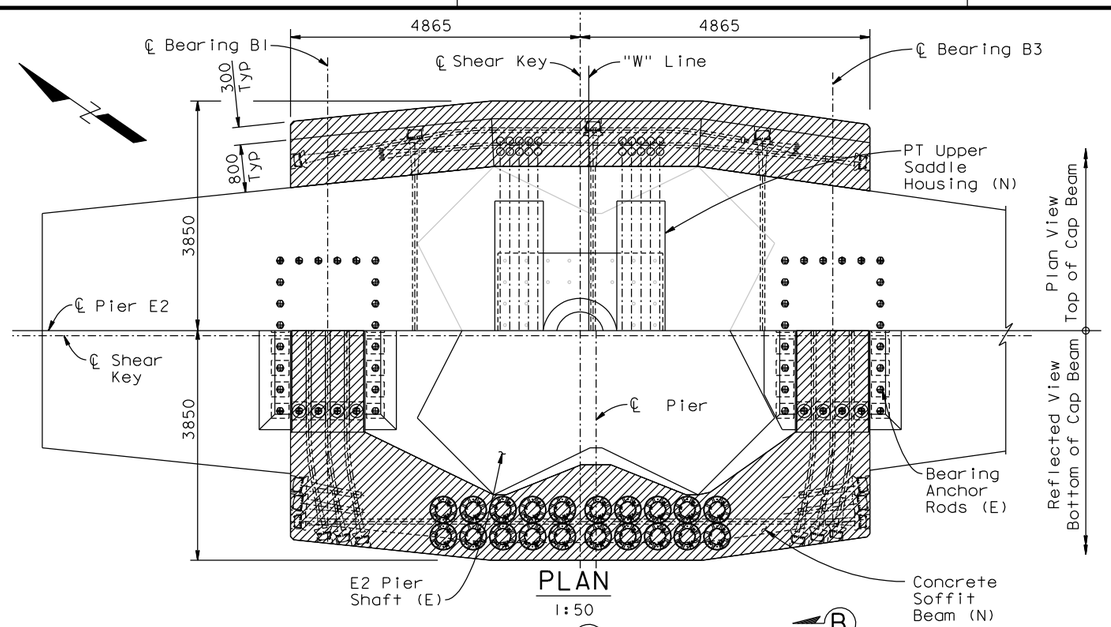


PLAN
1:50

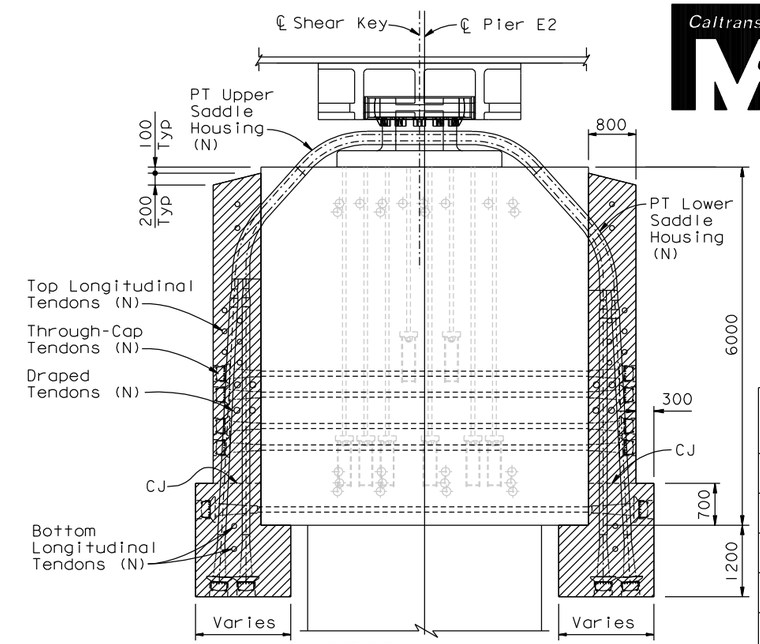


SECTION A-A
1:50

POST TENSIONING SUMMARY

| Global Stressing Order | Tendon Group | No. Strands per Tendon | Number of Tendons |
|---|---|---|---|
| 1 | Bottom Longitudinal | 12 | 8 |
| 2 | Transverse | 12 | 24 |
| 3 | Through-Cap | 19, 24 | 20, 2 |
| 4 | Top Longitudinal | 12 | 32 |
| 5, 7 | Draped | 19 | 16 |
| 6, 8 | Vertical | 26 | 40 |

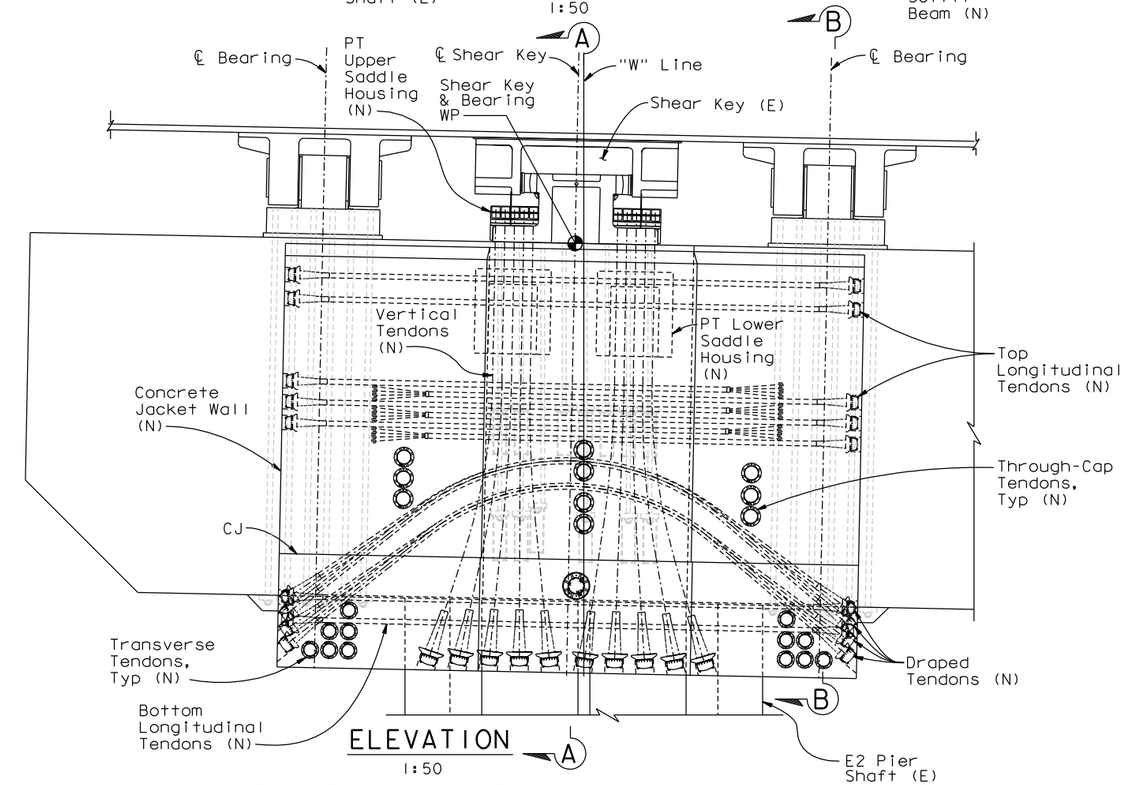


ELEVATION
1:50

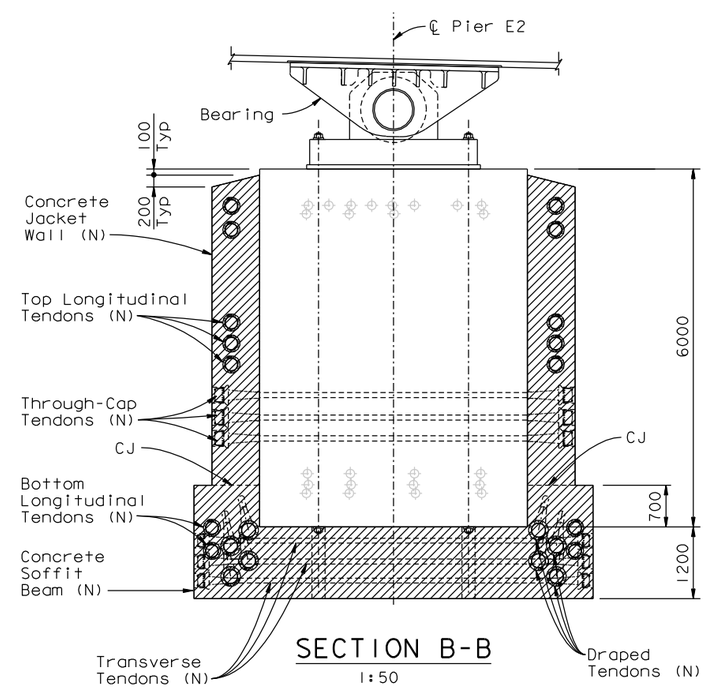


SECTION B-B
1:50

INDEX TO PLANS

S-01 General Arrangement
S-02 Concrete Outlines
S-03 Vertical PT Geometry
S-04 Saddle Details No. 1
S-05 Saddle Details No. 2
S-06 Saddle Details No. 3
S-07 Saddle Details No. 4
S-08 Saddle Details No. 5
S-09 Saddle Details No. 6
S-10 PT Details No. 1
S-11 PT Details No. 2
S-12 PT Details No. 3
S-13 PT Details No. 4
S-14 Reinforcement Details No. 1
S-15 Reinforcement Details No. 2
S-16 Reinforcement Details No. 3
S-17 Reinforcement Details No. 4
S-18 Reinforcement Details No. 5
S-19 Reinforcement Details No. 6
S-20 Construction Details No. 1
S-21 Construction Details No. 2
S-22 Construction Details No. 3
S-23 Construction Details No. 4
S-24 Construction Details No. 5
S-25 Construction Details No. 6
S-26 Construction Details No. 7

LEGEND:

55 MPa Concrete (N)

(N) New

(E) Existing

CONTRACT CHANGE ORDER NO. _____
SHEET ___ OF ___

*REQUESTS FOR INFORMATION NOT ADDRESSED IN THIS CCO REMAIN IN FORCE*

ALL DIMENSIONS ARE IN MILLIMETERS UNLESS OTHERWISE SHOWN

A. Akinsanya / W. Long
DESIGN OVERSIGHT
SIGN OFF DATE 07/01/13

| MARK | DATE | DESCRIPTIONS | BY | CH'D | CCO# |
|---|---|---|---|---|---|
| 0 | 07/01/13 | PIER E2 PLANS | AS | MN | 331 |

REVISIONS

| | | | |
|---|---|---|---|
| DESIGN | BY A. Sanjines | CHECKED S. Rodriguez | |
| DETAILS | BY M. Benoit | CHECKED H. Patel | |
| QUANTITIES | BY N. Vo | CHECKED J. Grove | |

**PREPARED FOR THE STATE OF CALIFORNIA DEPARTMENT OF TRANSPORTATION**

M. Nader
PROJECT ENGINEER

BRIDGE NO. 34-0006L/R
KILOMETER POST 13.2/13.9

SAN FRANCISCO OAKLAND BAY BRIDGE
EAST SPAN SEISMIC SAFETY PROJECT
SELF-ANCHORED SUSPENSION BRIDGE
(SUPERSTRUCTURE & TOWER)

# S1 & S2 NEW DESIGN: GENERAL ARRANGEMENT

Rev. Date: 5-22-13

ORIGINAL SCALE IN MILLIMETERS FOR REDUCED PLANS 0 10 20 30 40 50 60 70 80 90 100

CU 04
EA 0120F1

DISREGARD PRINTS BEARING EARLIER REVISION DATES 07/01/13

REVISION DATES (PRELIMINARY STAGE ONLY)

SHEET 102S1 OF

FILE => I:\bb\04-012001\sas\contract plans and cco\cco\cco*331\1-original 07-01-13\dgn\aepir11.dgn

100 % PS&E

DATE PLOTTED => 03 JUL 2013 TIME PLOTTED => 14:31:03

USERNAME => PHuq

| DIST. | COUNTY | ROUTE | KILOMETER POST TOTAL PROJECT | SHEET NO. | TOTAL SHEETS |
|---|---|---|---|---|---|
| 04 | SF | 80 | 13.2/13.9 | 519S2 | 1204 |

REGISTERED ENGINEER - CIVIL

07-01-13

PLANS APPROVAL DATE

*The State of California or its officers or agents shall not be responsible for the accuracy or completeness of electronic copies of this plan sheet.*

REGISTERED PROFESSIONAL ENGINEER Marwan N. Nader No. C 054426 Exp. 12/31/13 CIVIL STATE OF CALIFORNIA

T.Y. LIN / MOFFATT & NICHOL
825 BATTERY STREET
SAN FRANCISCO, CA 94111

*Caltrans now has a web site! To get to the web site, go to: http://www.dot.ca.gov*

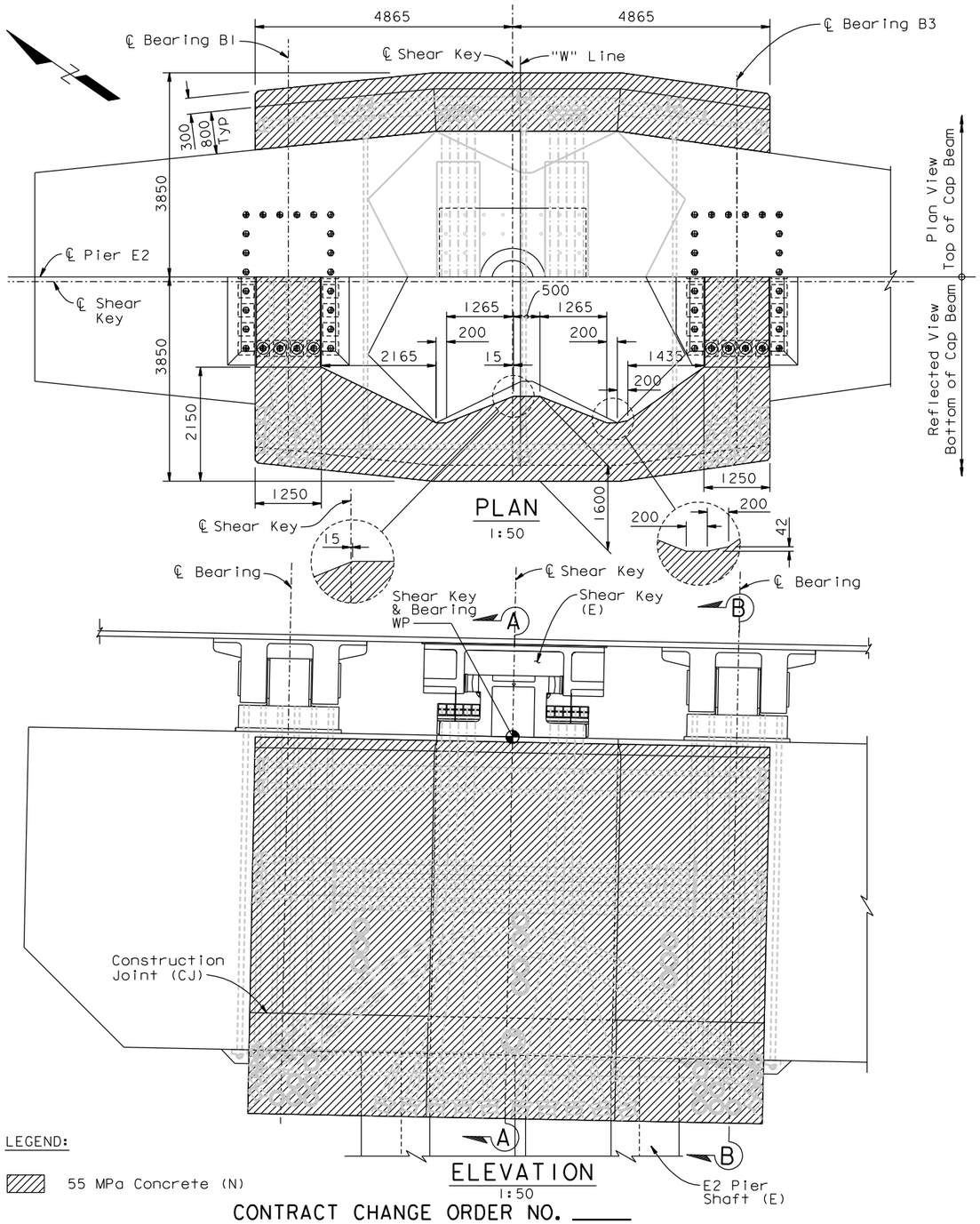


PLAN
1:50

ELEVATION
1:50

LEGEND:

55 MPa Concrete (N)

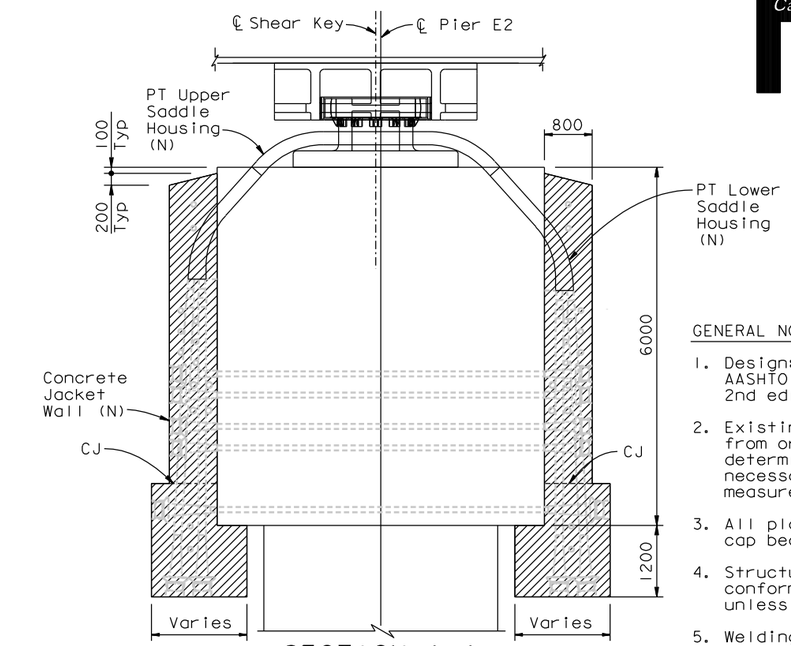


SECTION A-A
1:50

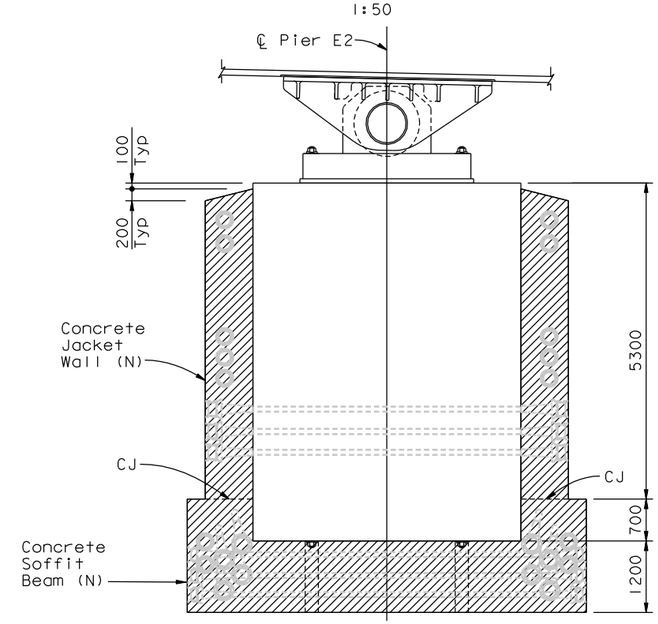


SECTION B-B
1:50

GENERAL NOTES:

1. Design: CalTrans Bridge Design Specification and AASHTO Guide Specifications for LRFD Seismic Design, 2nd edition.
2. Existing Conditions: Dimensions shown are taken from original design drawings. The Contractor shall determine and establish all dimensions and details necessary for the completion of all work by field measurement and survey.
3. All plan dimensions along longitudinal axis of cap beam are given at 2% slope to true horizontal.
4. Structural Steel: All structural plate shall conform to the requirements of ASTM A709M Grade 345 unless noted otherwise.
5. Welding: All welding shall comply with the provisions of the AASHTO / AWS Bridge Welding Code (ANSI / AASHTO / AWS D 1.5).
6. Design clearances require that the Shear Key Bushing and Housing Assembly be fabricated in two horizontal pieces.
7. Existing shear key shall be prepared to near white finish and coated to achieve a Class B surface. For new saddle component finishes, see SPI0-1.59.
8. Coating: All exposed structural steel and components shall be coated with the project specified coating system (SPI0-1.69).
9. Prestressing strands shall conform to ASTM A416, 15mm low relaxation, 7-wire strands with ultimate strength Fu = 1860 MPa. All post tensioning shall be jacked to 75% of Fu. Design assumes that 600T multi-strand rams will be used.
10. A compressive strength of 55 MPa (f'ci) shall be attained in the concrete soffit beam prior to stressing. A minimum compressive strength of 36 MPa (f'ci) shall be attained in the concrete jacket wall prior to stressing.
11. Ducts shall be grouted with high strength non-shrink grout (f'c = 55 MPa).
12. Reinforced Concrete: f'c = 55 MPa.
13. Mild steel reinforcement shall comply with ASTM A706 - fy = 415 MPa, fu = 738 MPa.
14. Pourable chocking compound (Sikadur 35 LV or similar) may be applied on designated surfaces to provide uniform bearing. Maximum placement thickness shall not exceed product specification.
15. "Drill & bond dowels" are to be installed with an approved chemical adhesive anchor system.
16. Studs shall be A108.

CONTRACT CHANGE ORDER NO. _____
SHEET ____ OF ____

*REQUESTS FOR INFORMATION NOT ADDRESSED IN THIS CCO REMAIN IN FORCE*

ALL DIMENSIONS ARE IN MILLIMETERS UNLESS OTHERWISE SHOWN

A. Akinsanya / W. Long
DESIGN OVERSIGHT
SIGN OFF DATE 07/01/13

| MARK | DATE | DESCRIPTIONS | BY | CH'D | CCO# |
|---|---|---|---|---|---|
| 0 | 07/01/13 | PIER E2 PLANS | AS | MN | 331 |

REVISIONS

| | | | |
|---|---|---|---|
| DESIGN | BY A. Sanjines | CHECKED S. Rodriguez | |
| DETAILS | BY M. Benoit | CHECKED H. Patel | |
| QUANTITIES | BY N. Vo | CHECKED J. Grove | |

**PREPARED FOR THE STATE OF CALIFORNIA DEPARTMENT OF TRANSPORTATION**

M. Nader
PROJECT ENGINEER

BRIDGE NO. 34-0006L/R
KILOMETER POST 13.2/13.9

SAN FRANCISCO OAKLAND BAY BRIDGE
EAST SPAN SEISMIC SAFETY PROJECT
SELF-ANCHORED SUSPENSION BRIDGE
(SUPERSTRUCTURE & TOWER)

# S1 & S2 NEW DESIGN: CONCRETE OUTLINES

Rev. Date: 5-22-13

ORIGINAL SCALE IN MILLIMETERS FOR REDUCED PLANS 0 10 20 30 40 50 60 70 80 90 100

CU 04
EA 0120F1

DISREGARD PRINTS BEARING EARLIER REVISION DATES 07/01/13

REVISION DATES (PRELIMINARY STAGE ONLY) SHEET 102S2 OF

FILE => I:\bb\04-012001\sas\contract plans and cco\cco\cco#331\1-original 07-01-13\dgn\aepir12.dgn

100 % PS&E

USERNAME => PHua DATE PLOTTED => 03 JUL 2013 TIME PLOTTED => 14:32:14

| DIST. | COUNTY | ROUTE | KILOMETER POST TOTAL PROJECT | SHEET NO. | TOTAL SHEETS |
|---|---|---|---|---|---|
| 04 | SF | 80 | 13.2/13.9 | 519S3 | 1204 |

REGISTERED ENGINEER - CIVIL

07-01-13

PLANS APPROVAL DATE

*The State of California or its officers or agents shall not be responsible for the accuracy or completeness of electronic copies of this plan sheet.*

REGISTERED PROFESSIONAL ENGINEER Marwan N. Nader No. C 054426 Exp. 12/31/13 CIVIL STATE OF CALIFORNIA

T.Y. LIN / MOFFATT & NICHOL
825 BATTERY STREET
SAN FRANCISCO, CA 94111

*Caltrans now has a web site! To get to the web site, go to: http://www.dot.ca.gov*

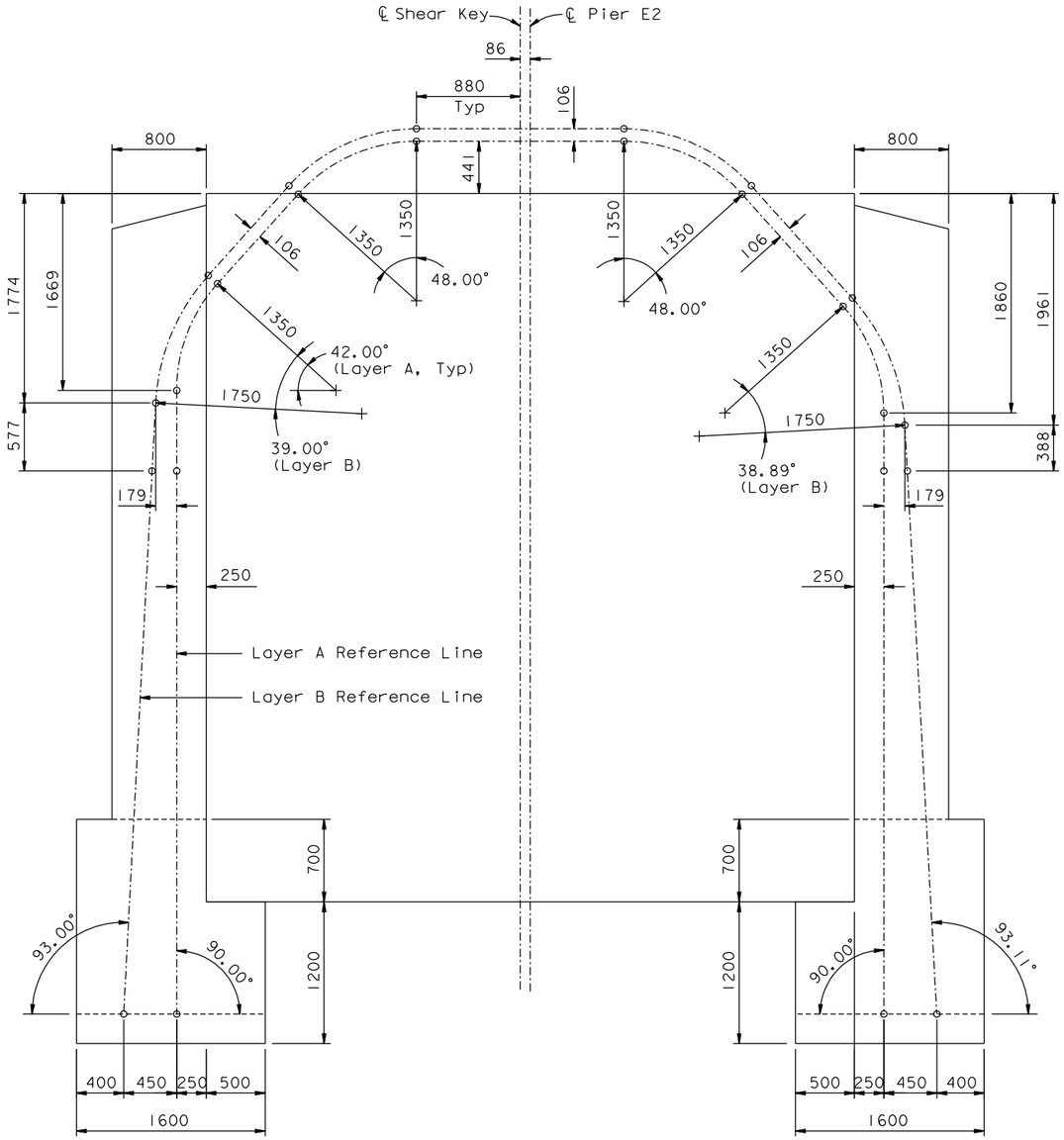


## SECTION

1:25

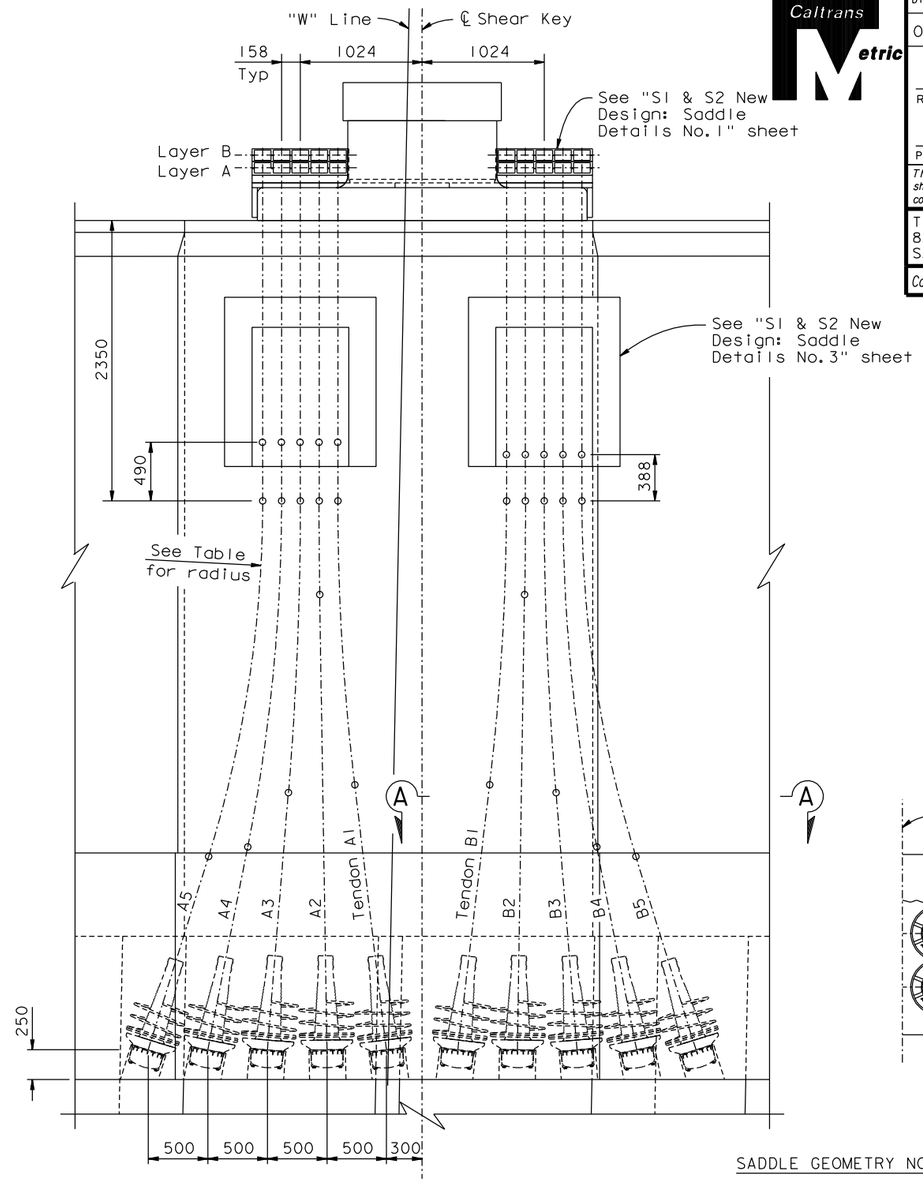


## ELEVATION

1:25

(LOOKING DOWN ON STATION)

VERTICAL POST TENSIONING ANCHOR ORIENTATION

| Tendon | Angle (°) | Radius |
|---|---|---|
| A1 | -6.83° | 20.0 m |
| B1 | | |
| A2 | -0.90° | 50.0 m |
| B2 | | |
| A3 | 4.67° | 30.0 m |
| B3 | | |
| A4 | 11.15° | 15.0 m |
| B4 | | |
| A5 | 17.33° | 10.0 m |
| B5 | | |

Angles measured from 2% offset from vertical

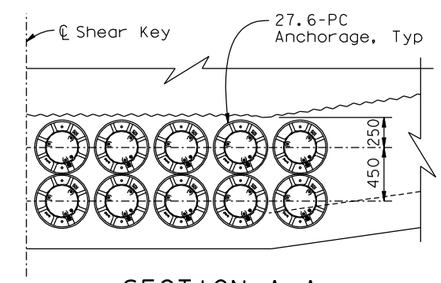


## SECTION A-A

1:25

SADDLE GEOMETRY NOTES:

1. Layer A anchorages align on a straight axis 250 off of existing cap beam wall, see Section A-A.
2. Tendon names and geometry are symmetrical about ℄ of Shear Key. "A" indicates tendons in inner level, "B" indicates tendons in outer level.
3. Reference lines for Layers A & B within the saddle assembly are located 43 mm and 38 mm above tray interior bottom surface, respectively. Shift from reference line to center of duct occurs within transition to corrugated duct.

CONTRACT CHANGE ORDER NO. _____
SHEET ____ OF ____

*REQUESTS FOR INFORMATION NOT ADDRESSED IN THIS CCO REMAIN IN FORCE*

ALL DIMENSIONS ARE IN MILLIMETERS UNLESS OTHERWISE SHOWN

A. Akinsanya / W. Long
DESIGN OVERSIGHT
SIGN OFF DATE 07/01/13

| MARK | DATE | DESCRIPTIONS | BY | CH'D | CCO# |
|---|---|---|---|---|---|
| 0 | 07/01/13 | PIER E2 PLANS | AS | MN | 331 |

REVISIONS

| | | | |
|---|---|---|---|
| DESIGN | BY A. Sanjines | CHECKED S. Rodriguez | |
| DETAILS | BY C. Hovell | CHECKED H. Patel | |
| QUANTITIES | BY N. Vo | CHECKED J. Grove | |

PREPARED FOR THE STATE OF CALIFORNIA DEPARTMENT OF TRANSPORTATION

M. Nader
PROJECT ENGINEER

BRIDGE NO. 34-0006L/R
KILOMETER POST 13.2/13.9

SAN FRANCISCO OAKLAND BAY BRIDGE
EAST SPAN SEISMIC SAFETY PROJECT
SELF-ANCHORED SUSPENSION BRIDGE
(SUPERSTRUCTURE & TOWER)

# S1 & S2 NEW DESIGN: VERTICAL PT GEOMETRY

Rev. Date: 5-22-13

ORIGINAL SCALE IN MILLIMETERS FOR REDUCED PLANS 0 10 20 30 40 50 60 70 80 90 100

CU 04
EA 0120F1

DISREGARD PRINTS BEARING EARLIER REVISION DATES

REVISION DATES (PRELIMINARY STAGE ONLY) 07/01/13

SHEET 102S3 OF

FILE => I:\bb\04-012001\sas\contract plans and cco\cco\cco#331\1-original 07-01-13\dgn\aepir13.dgn

100 % PS&E

DATE PLOTTED => 03 JUL 2013 TIME PLOTTED => 14:32:46

USERNAME => PHUG

| DIST. | COUNTY | ROUTE | KILOMETER POST TOTAL PROJECT | SHEET NO. | TOTAL SHEETS |
|---|---|---|---|---|---|
| 04 | SF | 80 | 13.2/13.9 | 519S4 | 1204 |

Caltrans Metric

REGISTERED ENGINEER - CIVIL

07-01-13

PLANS APPROVAL DATE

REGISTERED PROFESSIONAL ENGINEER Marwan N. Nader No. C 054426 Exp. 12/31/13 CIVIL STATE OF CALIFORNIA

*The State of California or its officers or agents shall not be responsible for the accuracy or completeness of electronic copies of this plan sheet.*

T.Y. LIN / MOFFATT & NICHOL
825 BATTERY STREET
SAN FRANCISCO, CA 94111

*Caltrans now has a web site! To get to the web site, go to: http://www.dot.ca.gov*

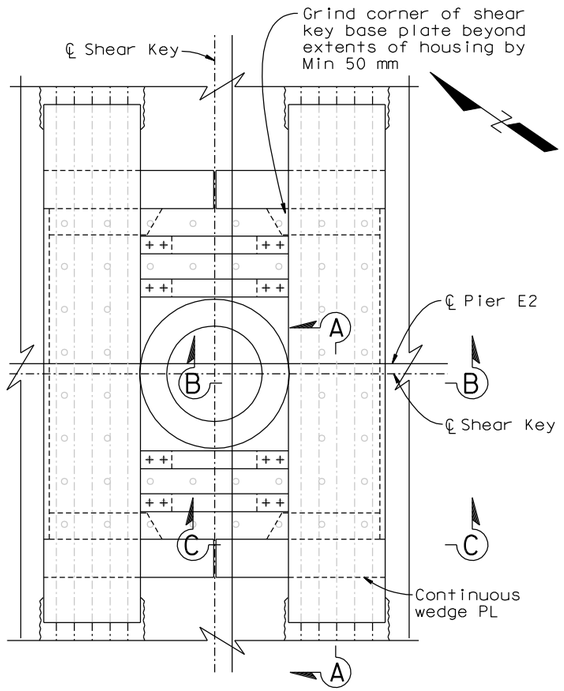


## KEY PLAN - UPPER SADDLE

1:25

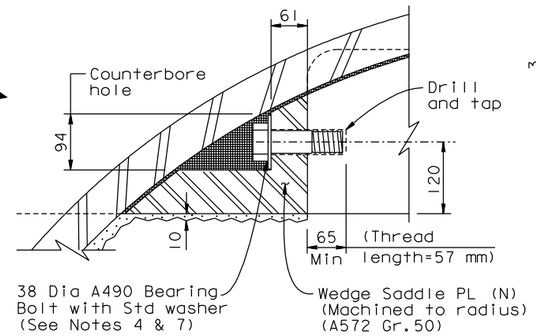


## DETAIL A

1:5

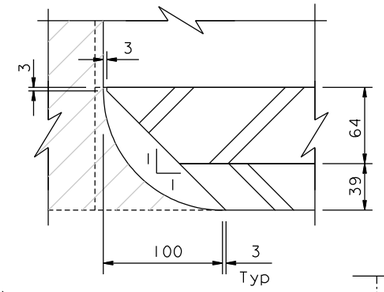


## DETAIL B

1:2.5
See note 8

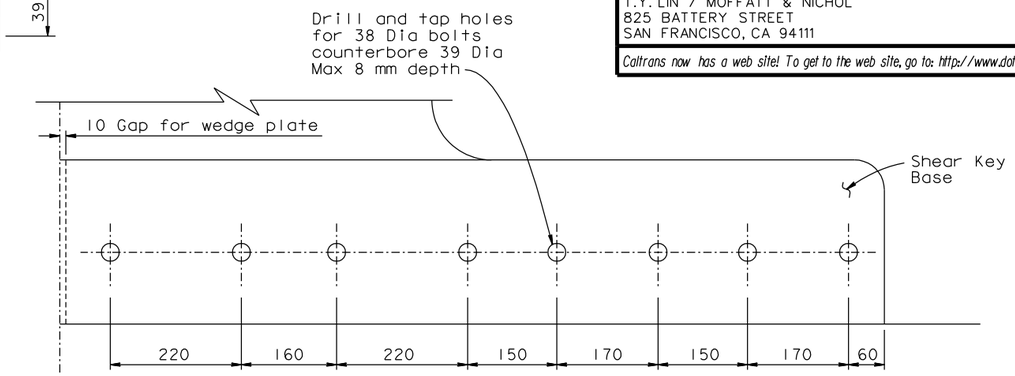


## SECTION C-C

1:5

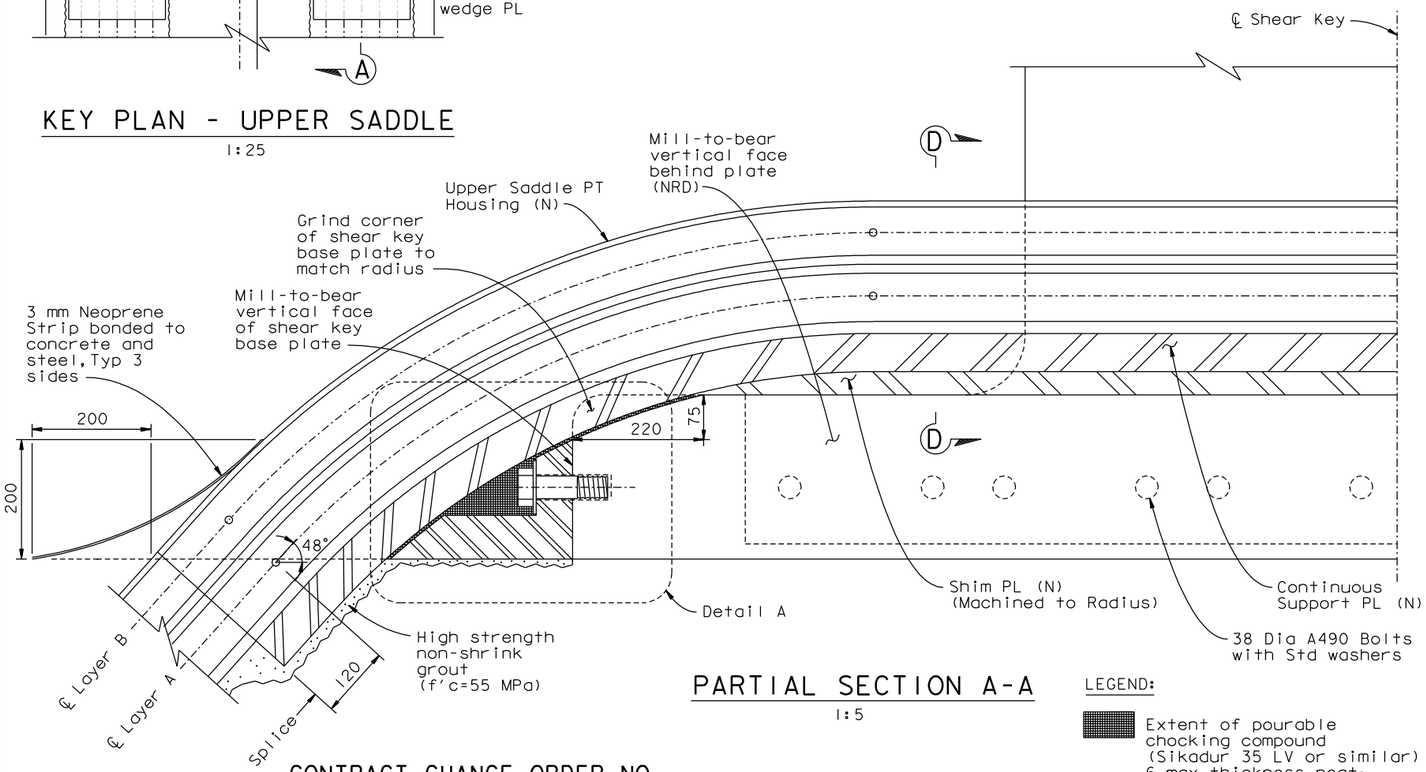


## PARTIAL SECTION A-A

1:5

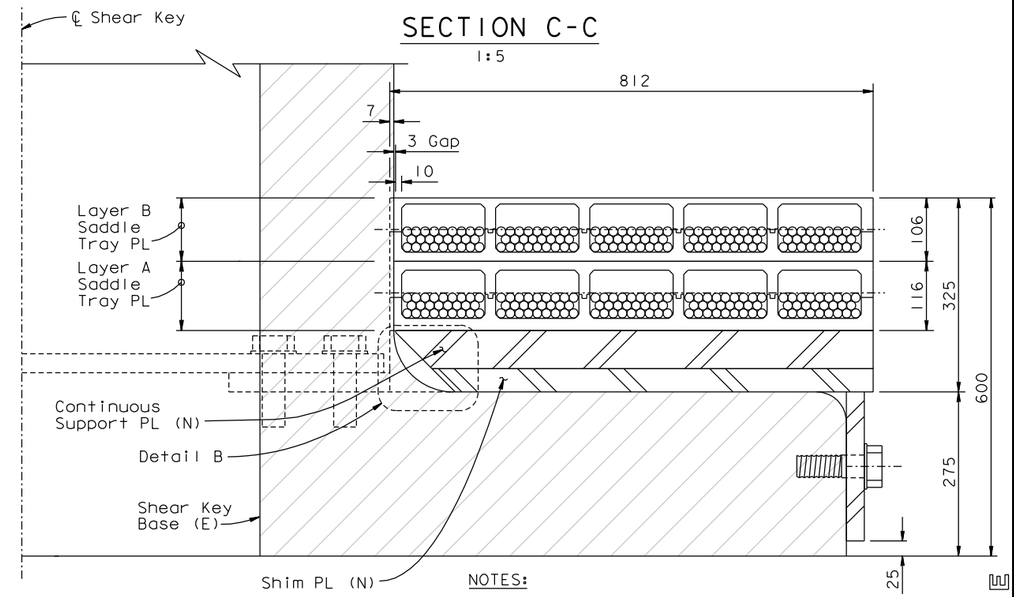


## SECTION B-B

1:5

LEGEND:

Extent of pourable chocking compound (Sikadur 35 LV or similar) 6 max thickness neat; place in bolt recess in lifts with max thickness per material specification

NOTES:

1. Survey shall be used to set final dimensions.
2. Confirm geometry with full shop assembly prior to delivery to site.
3. Shop PJP welds shall be ground flush with surface.
4. Install uncoated black bolt and paint exposed surfaces with two (2) coats of Caltrans approved organic zinc rich primer prior to epoxy backfill.
5. Contractor to provide erection tabs and lifting lugs per their means and methods.
6. For Section D-D, see "S1 & S2 New Design: Saddle Details No.2" sheet.
7. Apply Loctite or equal to threads prior to installing bolts.
8. Trim plates only around shear key fillet.
9. All bolts connecting the saddle to the existing shear key shall be snug tight.

ALL DIMENSIONS ARE IN MILLIMETERS UNLESS OTHERWISE SHOWN

CONTRACT CHANGE ORDER NO. _____
SHEET ___ OF ___

*REQUESTS FOR INFORMATION NOT ADDRESSED IN THIS CCO REMAIN IN FORCE*

A. Akinsanya / W. Long
DESIGN OVERSIGHT
SIGN OFF DATE 07/01/13

| MARK | DATE | DESCRIPTIONS | BY | CH'D | CCO# |
|---|---|---|---|---|---|
| 0 | 07/01/13 | PIER E2 PLANS | AS | MN | 331 |

REVISIONS

| | | | |
|---|---|---|---|
| DESIGN | BY A. Sanjines | CHECKED S. Rodriguez | |
| DETAILS | BY J. Denis | CHECKED G. Baker | |
| QUANTITIES | BY N. Vo | CHECKED J. Grove | |

PREPARED FOR THE STATE OF CALIFORNIA DEPARTMENT OF TRANSPORTATION

M. Nader
PROJECT ENGINEER

BRIDGE NO. 34-0006L/R
KILOMETER POST 13.2/13.9

SAN FRANCISCO OAKLAND BAY BRIDGE
EAST SPAN SEISMIC SAFETY PROJECT
SELF-ANCHORED SUSPENSION BRIDGE
(SUPERSTRUCTURE & TOWER)

# S1 & S2 NEW DESIGN: SADDLE DETAILS NO.1

Rev. Date: 5-22-13

ORIGINAL SCALE IN MILLIMETERS FOR REDUCED PLANS 0 10 20 30 40 50 60 70 80 90 100

CU 04
EA 0120F1

DISREGARD PRINTS BEARING EARLIER REVISION DATES

REVISION DATES (PRELIMINARY STAGE ONLY) 07/01/13

SHEET 102S4 OF

FILE => L:\BB\04-012001\SAS\Contract Plans and CCO\CCO\CCO#331\1-Original 07-01-13\DGN\aepir14.dgn

USERNAME => arivera DATE PLOTTED => 03 JUL 2013 TIME PLOTTED => 16:38:57

100% PS&E

| DIST. | COUNTY | ROUTE | KILOMETER POST TOTAL PROJECT | SHEET NO. | TOTAL SHEETS |
|---|---|---|---|---|---|
| 04 | SF | 80 | 13.2/13.9 | 519S5 | 1204 |

REGISTERED ENGINEER - CIVIL

07-01-13

PLANS APPROVAL DATE

REGISTERED PROFESSIONAL ENGINEER Marwan N. Nader No. C 054426 Exp. 12/31/13 CIVIL STATE OF CALIFORNIA

*The State of California or its officers or agents shall not be responsible for the accuracy or completeness of electronic copies of this plan sheet.*

T.Y. LIN / MOFFATT & NICHOL
825 BATTERY STREET
SAN FRANCISCO, CA 94111

*Caltrans now has a web site! To get to the web site, go to: http://www.dot.ca.gov*

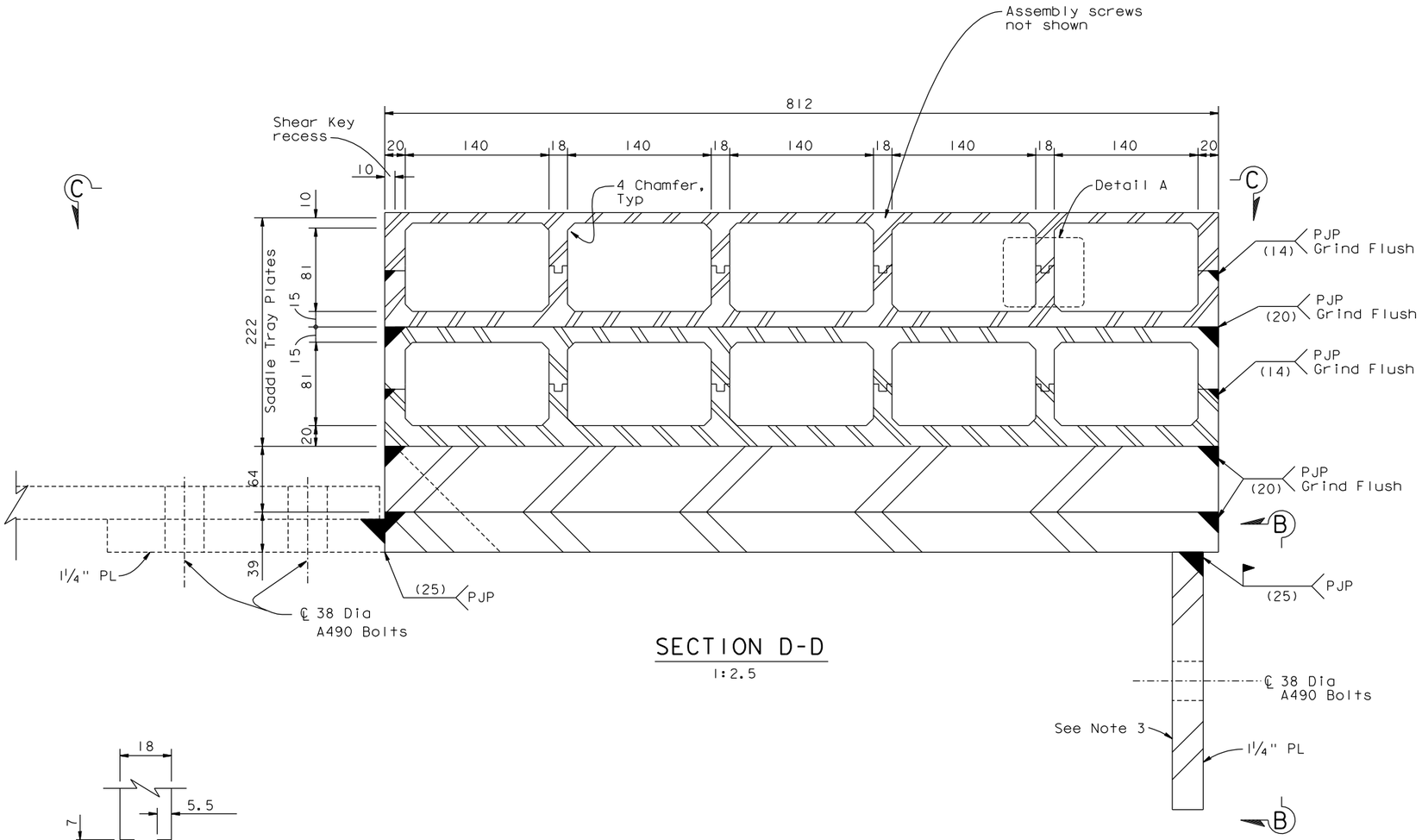


SECTION D-D
1:2.5

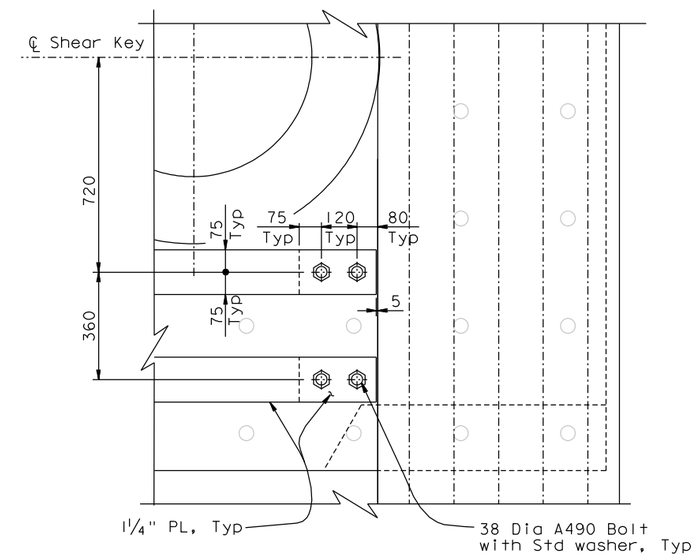


PLAN VIEW C-C
1:10

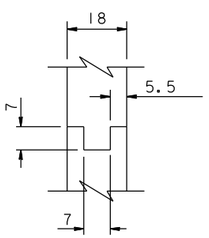


DETAIL A
1:1

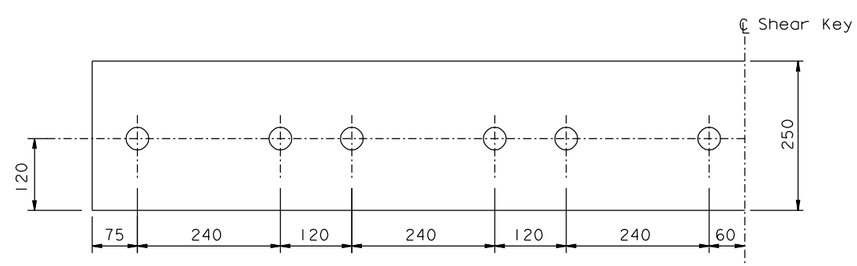


VIEW B-B
1:5

NOTES:

1. All key ways shall be sealed.
2. Welds shown are typical for upper and lower Saddle PT housings.
3. Connect side plate to shear key prior to welding.
4. Saddle assemblies shall be tested per Special Provisions.

CONTRACT CHANGE ORDER NO. _____
SHEET ____ OF ____

*REQUESTS FOR INFORMATION NOT ADDRESSED IN THIS CCO REMAIN IN FORCE*

ALL DIMENSIONS ARE IN MILLIMETERS UNLESS OTHERWISE SHOWN

A. Akinsanya / W. Long
DESIGN OVERSIGHT
SIGN OFF DATE 07/01/13

| MARK | DATE | DESCRIPTIONS | BY | CH'D | CCO# |
|---|---|---|---|---|---|
| 0 | 07/01/13 | PIER E2 PLANS | AS | MN | 331 |

REVISIONS

| | | | |
|---|---|---|---|
| DESIGN | BY A. Sanjines | CHECKED S. Rodriguez | |
| DETAILS | BY J. Denis | CHECKED G. Baker | |
| QUANTITIES | BY N. Vo | CHECKED J. Grove | |

**PREPARED FOR THE STATE OF CALIFORNIA DEPARTMENT OF TRANSPORTATION**

M. Nader
PROJECT ENGINEER

BRIDGE NO. 34-0006L/R
KILOMETER POST 13.2/13.9

SAN FRANCISCO OAKLAND BAY BRIDGE
EAST SPAN SEISMIC SAFETY PROJECT
SELF-ANCHORED SUSPENSION BRIDGE
(SUPERSTRUCTURE & TOWER)

**S1 & S2 NEW DESIGN: SADDLE DETAILS NO.2**

Rev. Date: 5-22-13

ORIGINAL SCALE IN MILLIMETERS FOR REDUCED PLANS 0 10 20 30 40 50 60 70 80 90 100

CU 04
EA 0120F1

DISREGARD PRINTS BEARING EARLIER REVISION DATES 07/01/13

REVISION DATES (PRELIMINARY STAGE ONLY)

SHEET 102S5 OF

FILE => L:\BB\04-012001\SAS\Contract Plans and CCO\CCO\CCO#331\1-Original 07-01-13\DGN\aepir15.dgn

100 % PS&E

USERNAME => arivera DATE PLOTTED => 03 JUL 2013 TIME PLOTTED => 16:41:22

| DIST. | COUNTY | ROUTE | KILOMETER POST TOTAL PROJECT | SHEET NO. | TOTAL SHEETS |
|---|---|---|---|---|---|
| 04 | SF | 80 | 13.2/13.9 | 519S6 | 1204 |

Caltrans Metric

REGISTERED ENGINEER - CIVIL

07-01-13

PLANS APPROVAL DATE

REGISTERED PROFESSIONAL ENGINEER Marwan N. Nader No. C 054426 Exp. 12/31/13 CIVIL STATE OF CALIFORNIA

*The State of California or its officers or agents shall not be responsible for the accuracy or completeness of electronic copies of this plan sheet.*

T.Y. LIN / MOFFATT & NICHOL
825 BATTERY STREET
SAN FRANCISCO, CA 94111

*Caltrans now has a web site! To get to the web site, go to: http://www.dot.ca.gov*

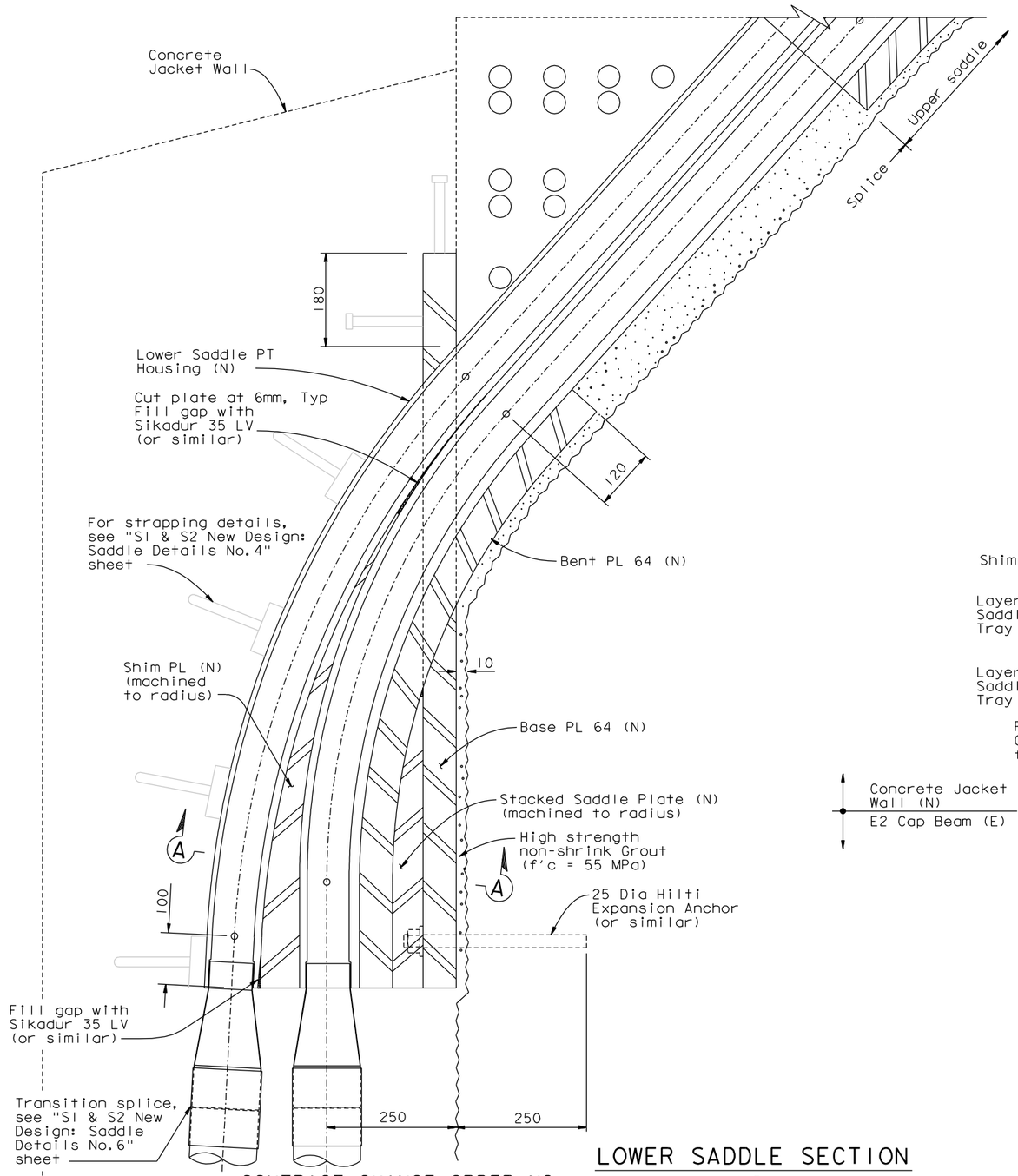


LOWER SADDLE SECTION

1:5

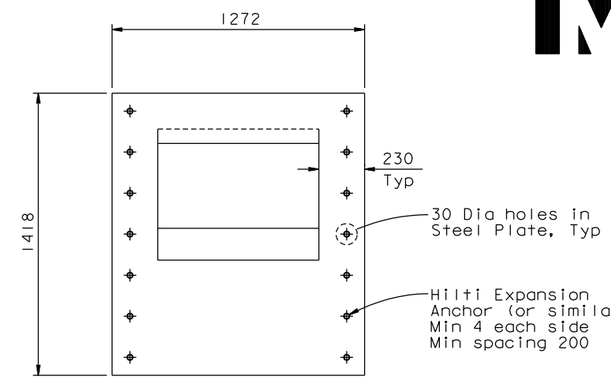


BASE PLATE DETAIL

1:15

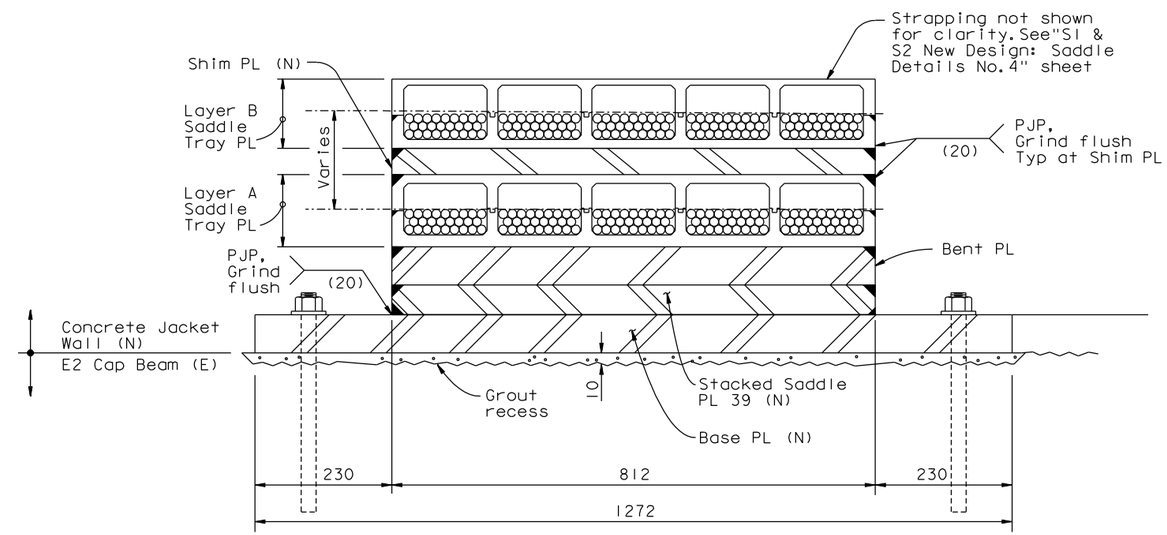


SECTION A-A

1:5

NOTES:

1. Lower saddle must be supported until expansion anchors are installed and nuts have been tightened.
2. For lower saddle weld details not given, see "S1 & S2 New Design: Saddle Details No.2" sheet.

CONTRACT CHANGE ORDER NO. ____
SHEET ____ OF ____

*REQUESTS FOR INFORMATION NOT ADDRESSED IN THIS CCO REMAIN IN FORCE*

ALL DIMENSIONS ARE IN MILLIMETERS UNLESS OTHERWISE SHOWN

| MARK | DATE | DESCRIPTIONS | BY | CH'D | CCO# |
|---|---|---|---|---|---|
| 0 | 07/01/13 | PIER E2 PLANS | AS | MN | 331 |

REVISIONS

A. Akinsanya / W. Long
DESIGN OVERSIGHT
SIGN OFF DATE 07/01/13

Rev. Date: 5-22-13

| | | | |
|---|---|---|---|
| DESIGN | BY A. Sanjines | CHECKED S. Rodriguez | |
| DETAILS | BY J. Denis | CHECKED G. Baker | |
| QUANTITIES | BY N. Vo | CHECKED J. Grove | |

**PREPARED FOR THE STATE OF CALIFORNIA DEPARTMENT OF TRANSPORTATION**

M. Nader
PROJECT ENGINEER

BRIDGE NO. 34-0006L/R
KILOMETER POST 13.2/13.9

SAN FRANCISCO OAKLAND BAY BRIDGE
EAST SPAN SEISMIC SAFETY PROJECT
SELF-ANCHORED SUSPENSION BRIDGE
(SUPERSTRUCTURE & TOWER)

**S1 & S2 NEW DESIGN: SADDLE DETAILS NO.3**

ORIGINAL SCALE IN MILLIMETERS FOR REDUCED PLANS 0 10 20 30 40 50 60 70 80 90 100

CU 04
EA 0120F1

DISREGARD PRINTS BEARING EARLIER REVISION DATES

REVISION DATES (PRELIMINARY STAGE ONLY) 07/01/13

SHEET 102S6 OF

FILE => I:\bb\04-012001\sas\contract plans and cco\cco\cco#331\1-original 07-01-13\dgn\aepir16.dgn

USERNAME => PHua DATE PLOTTED => 03 JUL 2013 TIME PLOTTED => 14:35:09

100 % PS&E

| DIST. | COUNTY | ROUTE | KILOMETER POST TOTAL PROJECT | SHEET NO. | TOTAL SHEETS |
|---|---|---|---|---|---|
| 04 | SF | 80 | 13.2/13.9 | 519S7 | 1204 |

REGISTERED ENGINEER - CIVIL

07-01-13

PLANS APPROVAL DATE

REGISTERED PROFESSIONAL ENGINEER Marwan N. Nader No. C 054426 Exp. 12/31/13 CIVIL STATE OF CALIFORNIA

*The State of California or its officers or agents shall not be responsible for the accuracy or completeness of electronic copies of this plan sheet.*

T.Y. LIN / MOFFATT & NICHOL
825 BATTERY STREET
SAN FRANCISCO, CA 94111

*Caltrans now has a web site! To get to the web site, go to: http://www.dot.ca.gov*

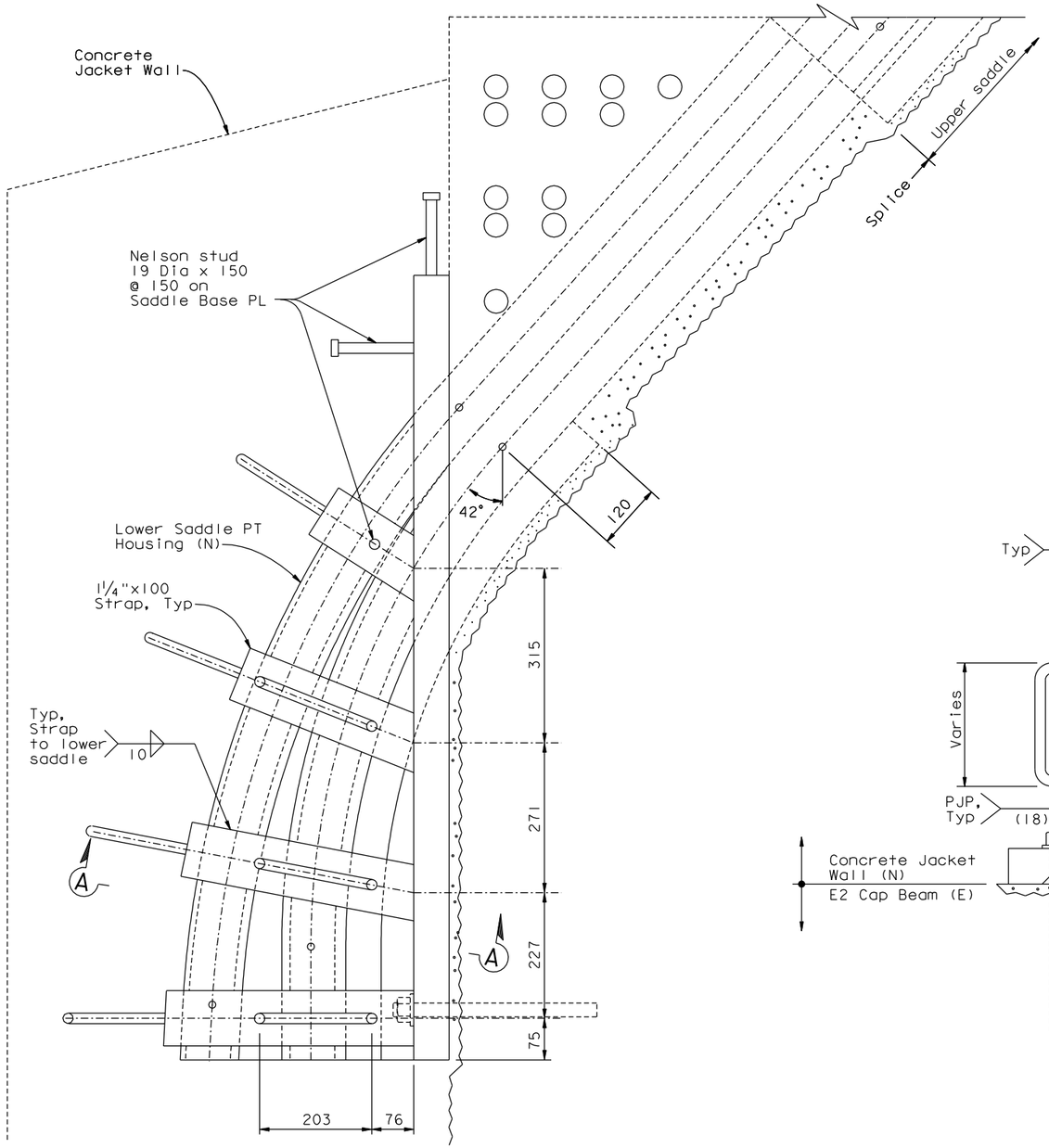


LOWER SADDLE ELEVATION

1:5

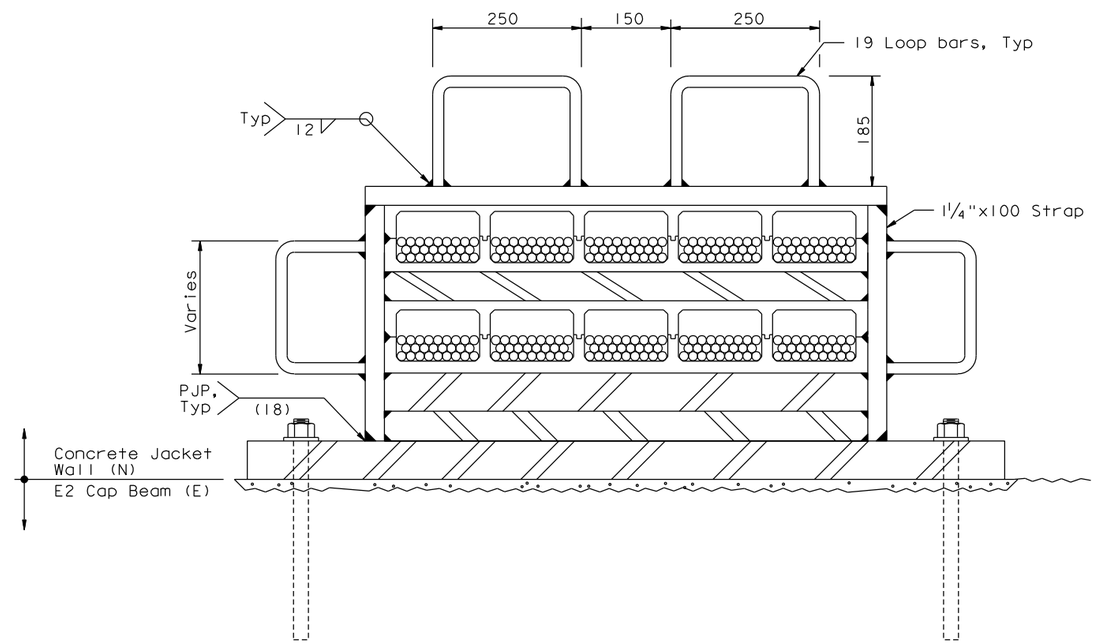


SECTION A-A

1:5

CONTRACT CHANGE ORDER NO. ____
SHEET ___ OF ___

*REQUESTS FOR INFORMATION NOT ADDRESSED IN THIS CCO REMAIN IN FORCE*

ALL DIMENSIONS ARE IN MILLIMETERS UNLESS OTHERWISE SHOWN

A. Akinsanya / W. Long
DESIGN OVERSIGHT
SIGN OFF DATE 07/01/13

| MARK | DATE | DESCRIPTIONS | BY | CH'D | CCO# |
|---|---|---|---|---|---|
| 0 | 07/01/13 | PIER E2 PLANS | AS | MN | 331 |

REVISIONS

| | | | |
|---|---|---|---|
| DESIGN | BY A. Sanjines | CHECKED | S. Rodriguez |
| DETAILS | BY J. Denis | CHECKED | G. Baker |
| QUANTITIES | BY N. Vo | CHECKED | J. Grove |

**PREPARED FOR THE STATE OF CALIFORNIA DEPARTMENT OF TRANSPORTATION**

M. Nader
PROJECT ENGINEER

BRIDGE NO. 34-0006L/R
KILOMETER POST 13.2/13.9

SAN FRANCISCO OAKLAND BAY BRIDGE
EAST SPAN SEISMIC SAFETY PROJECT
SELF-ANCHORED SUSPENSION BRIDGE
(SUPERSTRUCTURE & TOWER)

**S1 & S2 NEW DESIGN: SADDLE DETAILS NO. 4**

Rev. Date: 5-22-13

ORIGINAL SCALE IN MILLIMETERS FOR REDUCED PLANS 0 10 20 30 40 50 60 70 80 90 100

CU 04
EA 0120F1

DISREGARD PRINTS BEARING EARLIER REVISION DATES 07/01/13

REVISION DATES (PRELIMINARY STAGE ONLY)

SHEET 102S7 OF

FILE => I:\bb\04-012001\sas\contract plans and cco\cco\cco#331\1-original 07-01-13\dgn\aepir17.dgn

100 % PS&E

DATE PLOTTED => 03 JUL 2013 TIME PLOTTED => 14:35:38

USERNAME => PHua

| DIST. | COUNTY | ROUTE | KILOMETER POST TOTAL PROJECT | SHEET NO. | TOTAL SHEETS |
|---|---|---|---|---|---|
| 04 | SF | 80 | 13.2/13.9 | 519S8 | 1204 |

REGISTERED ENGINEER - CIVIL

07-01-13

PLANS APPROVAL DATE

*The State of California or its officers or agents shall not be responsible for the accuracy or completeness of electronic copies of this plan sheet.*

REGISTERED PROFESSIONAL ENGINEER Marwan N. Nader No. C 054426 Exp. 12/31/13 CIVIL STATE OF CALIFORNIA

T.Y. LIN / MOFFATT & NICHOL
825 BATTERY STREET
SAN FRANCISCO, CA 94111

*Caltrans now has a web site! To get to the web site, go to: http://www.dot.ca.gov*

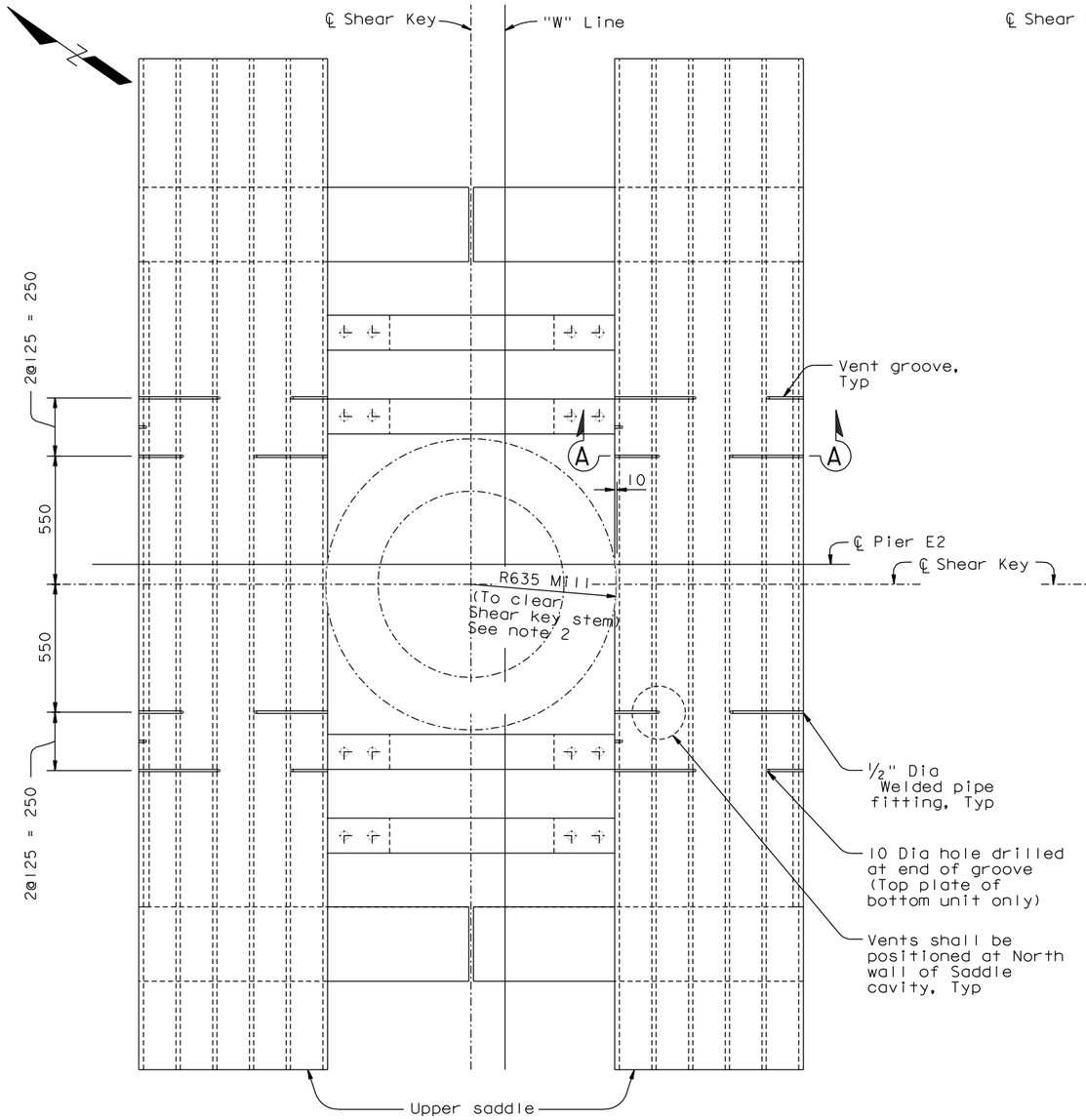


## KEY PLAN - UPPER SADDLE VENT GROOVE

1:12.5

(Layer A Venting)
("W" Line Saddle shown)

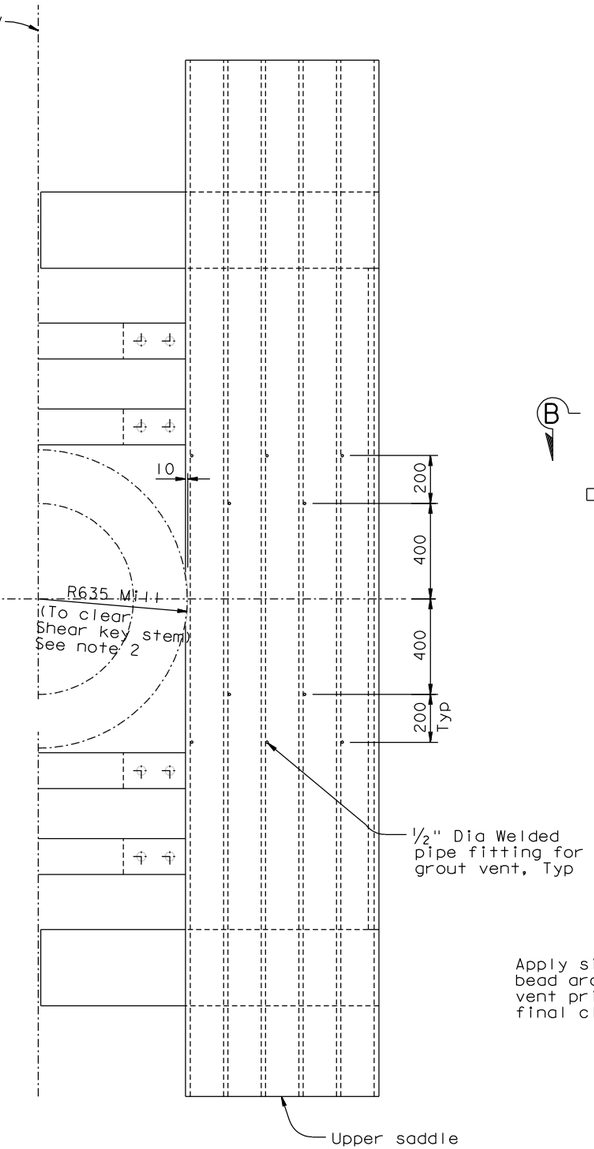


## SECTION B-B

1:12.5

(Layer B Venting)

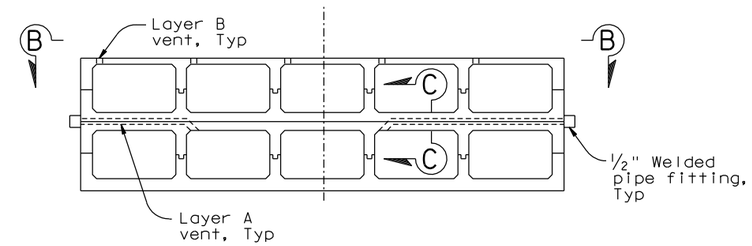


## SECTION A-A

1:5

(Assembly Bolts Not Shown)

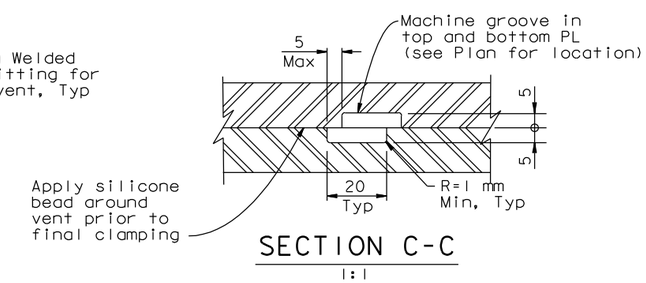


## SECTION C-C

1:1

NOTES:

1. Vent grooves, keys and tapped holes show one possible method; contactor to define per their means & methods.
2. Mill assembly after completing welding. Seal weld as needed. Grind flush.

CONTRACT CHANGE ORDER NO. ____
SHEET ___ OF ___

*REQUESTS FOR INFORMATION NOT ADDRESSED IN THIS CCO REMAIN IN FORCE*

# UPPER SADDLE DETAILS

ALL DIMENSIONS ARE IN MILLIMETERS UNLESS OTHERWISE SHOWN

A. Akinsanya / W. Long
DESIGN OVERSIGHT
SIGN OFF DATE 07/01/13

| MARK | DATE | DESCRIPTIONS | BY | CH'D | CCO# |
|---|---|---|---|---|---|
| 0 | 07/01/13 | PIER E2 PLANS | AS | MN | 331 |

REVISIONS

| | | | |
|---|---|---|---|
| DESIGN | BY A. Sanjines | CHECKED S. Rodriguez | |
| DETAILS | BY J. Denis | CHECKED G. Baker | |
| QUANTITIES | BY N. Vo | CHECKED J. Grove | |

**PREPARED FOR THE STATE OF CALIFORNIA DEPARTMENT OF TRANSPORTATION**

M. Nader
PROJECT ENGINEER

BRIDGE NO. 34-0006L/R
KILOMETER POST 13.2/13.9

SAN FRANCISCO OAKLAND BAY BRIDGE
EAST SPAN SEISMIC SAFETY PROJECT
SELF-ANCHORED SUSPENSION BRIDGE
(SUPERSTRUCTURE & TOWER)

**S1 & S2 NEW DESIGN: SADDLE DETAILS NO.5**

Rev. Date: 5-22-13

ORIGINAL SCALE IN MILLIMETERS FOR REDUCED PLANS 0 10 20 30 40 50 60 70 80 90 100

CU 04
EA 0120F1

DISREGARD PRINTS BEARING EARLIER REVISION DATES 07/01/13

REVISION DATES (PRELIMINARY STAGE ONLY)

SHEET 102S8 OF

FILE => L:\BB\04-012001\SAS\Contract Plans and CCO\CCO\CCO#331\1-Original 07-01-13\DGN\aepir18.dgn

100% PS&E

USERNAME => arivera DATE PLOTTED => 03 JUL 2013 TIME PLOTTED => 16:42:45

| DIST. | COUNTY | ROUTE | KILOMETER POST TOTAL PROJECT | SHEET NO. | TOTAL SHEETS |
|---|---|---|---|---|---|
| 04 | SF | 80 | 13.2/13.9 | 519S9 | 1204 |

REGISTERED ENGINEER - CIVIL

07-01-13

PLANS APPROVAL DATE

REGISTERED PROFESSIONAL ENGINEER Marwan N. Nader No. C 054426 Exp. 12/31/13 CIVIL STATE OF CALIFORNIA

*The State of California or its officers or agents shall not be responsible for the accuracy or completeness of electronic copies of this plan sheet.*

T.Y. LIN / MOFFATT & NICHOL
825 BATTERY STREET
SAN FRANCISCO, CA 94111

*Caltrans now has a web site! To get to the web site, go to: http://www.dot.ca.gov*

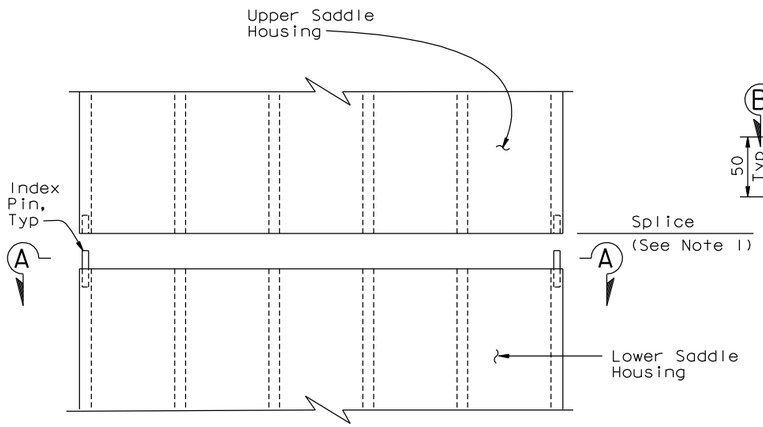


SADDLE SPLICE - PLAN

1:5

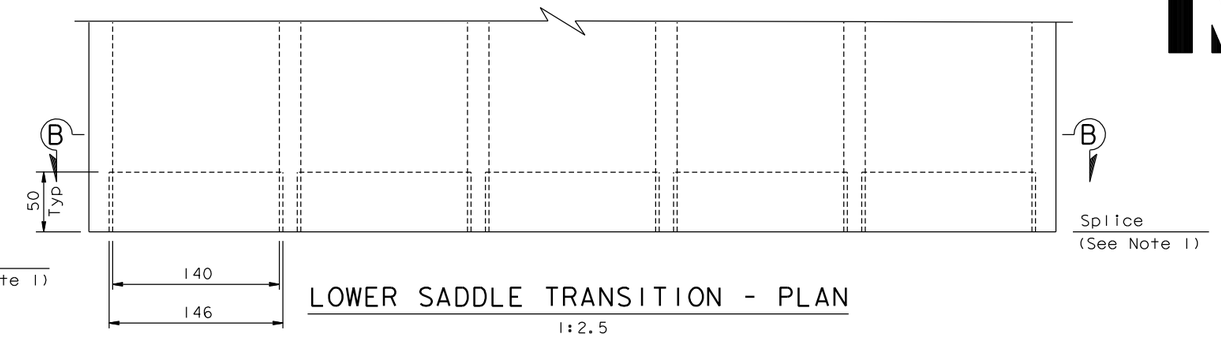


LOWER SADDLE TRANSITION - PLAN

1:2.5

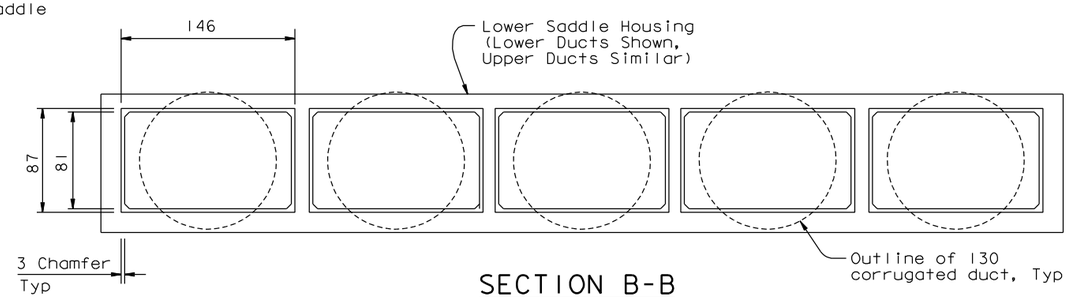


SECTION B-B

1:2.5

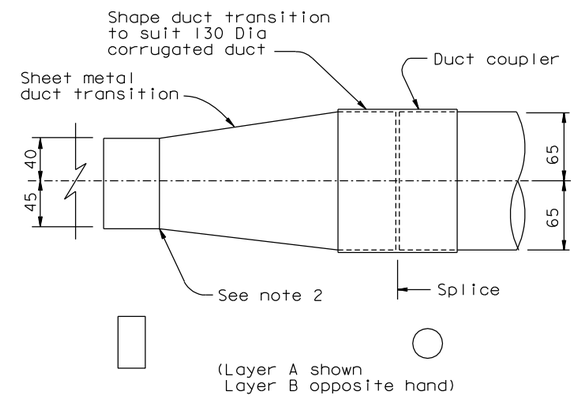


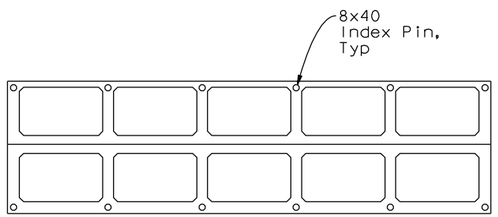


SECTION A-A

1:5

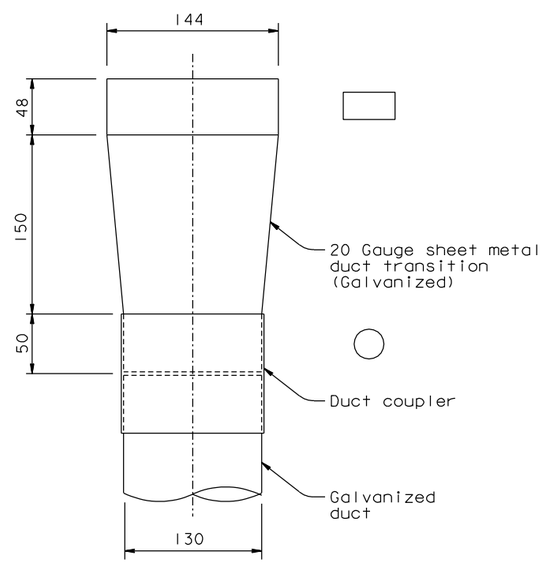


BOTTOM SADDLE DUCT TRANSITION

1:2.5

NOTES:

1. Contractor to design splice details to prevent concrete ingress and grout leakage between layers.
2. Shape duct transition to suit lower saddle chamfers.

CONTRACT CHANGE ORDER NO. _____
SHEET ____ OF ____

*REQUESTS FOR INFORMATION NOT ADDRESSED IN THIS CCO REMAIN IN FORCE*

ALL DIMENSIONS ARE IN MILLIMETERS UNLESS OTHERWISE SHOWN

A. Akinsanya / W. Long
DESIGN OVERSIGHT
SIGN OFF DATE 07/01/13

| MARK | DATE | DESCRIPTIONS | BY | CH'D | CCO# |
|---|---|---|---|---|---|
| 0 | 07/01/13 | PIER E2 PLANS | AS | MN | 331 |

REVISIONS

| | | | |
|---|---|---|---|
| DESIGN | BY A. Sanjines | CHECKED S. Rodriguez | |
| DETAILS | BY J. Denis | CHECKED G. Baker | |
| QUANTITIES | BY N. Vo | CHECKED J. Grove | |

**PREPARED FOR THE STATE OF CALIFORNIA DEPARTMENT OF TRANSPORTATION**

M. Nader
PROJECT ENGINEER

BRIDGE NO. 34-0006L/R
KILOMETER POST 13.2/13.9

SAN FRANCISCO OAKLAND BAY BRIDGE
EAST SPAN SEISMIC SAFETY PROJECT
SELF-ANCHORED SUSPENSION BRIDGE
(SUPERSTRUCTURE & TOWER)

**S1 & S2 NEW DESIGN: SADDLE DETAILS NO.6**

Rev. Date: 5-22-13

ORIGINAL SCALE IN MILLIMETERS FOR REDUCED PLANS 0 10 20 30 40 50 60 70 80 90 100

CU 04
EA 0120F1

DISREGARD PRINTS BEARING EARLIER REVISION DATES

REVISION DATES (PRELIMINARY STAGE ONLY) 07/01/13

SHEET 102S9 OF

FILE => L:\BB\04-012001\SAS\Contract Plans and CCO\CCO\CCO#331\1-Original 07-01-13\DGN\aepir19.dgn

100% PS&E

USERNAME => arivera DATE PLOTTED => 03 JUL 2013 TIME PLOTTED => 16:44:39

| DIST. | COUNTY | ROUTE | KILOMETER POST TOTAL PROJECT | SHEET NO. | TOTAL SHEETS |
|---|---|---|---|---|---|
| 04 | SF | 80 | 13.2/13.9 | 519S10 | 1204 |

REGISTERED ENGINEER - CIVIL

07-01-13

PLANS APPROVAL DATE

REGISTERED PROFESSIONAL ENGINEER Marwan N. Nader No. C 054426 Exp. 12/31/13 CIVIL STATE OF CALIFORNIA

*The State of California or its officers or agents shall not be responsible for the accuracy or completeness of electronic copies of this plan sheet.*

T.Y. LIN / MOFFATT & NICHOL
825 BATTERY STREET
SAN FRANCISCO, CA 94111

*Caltrans now has a web site! To get to the web site, go to: http://www.dot.ca.gov*

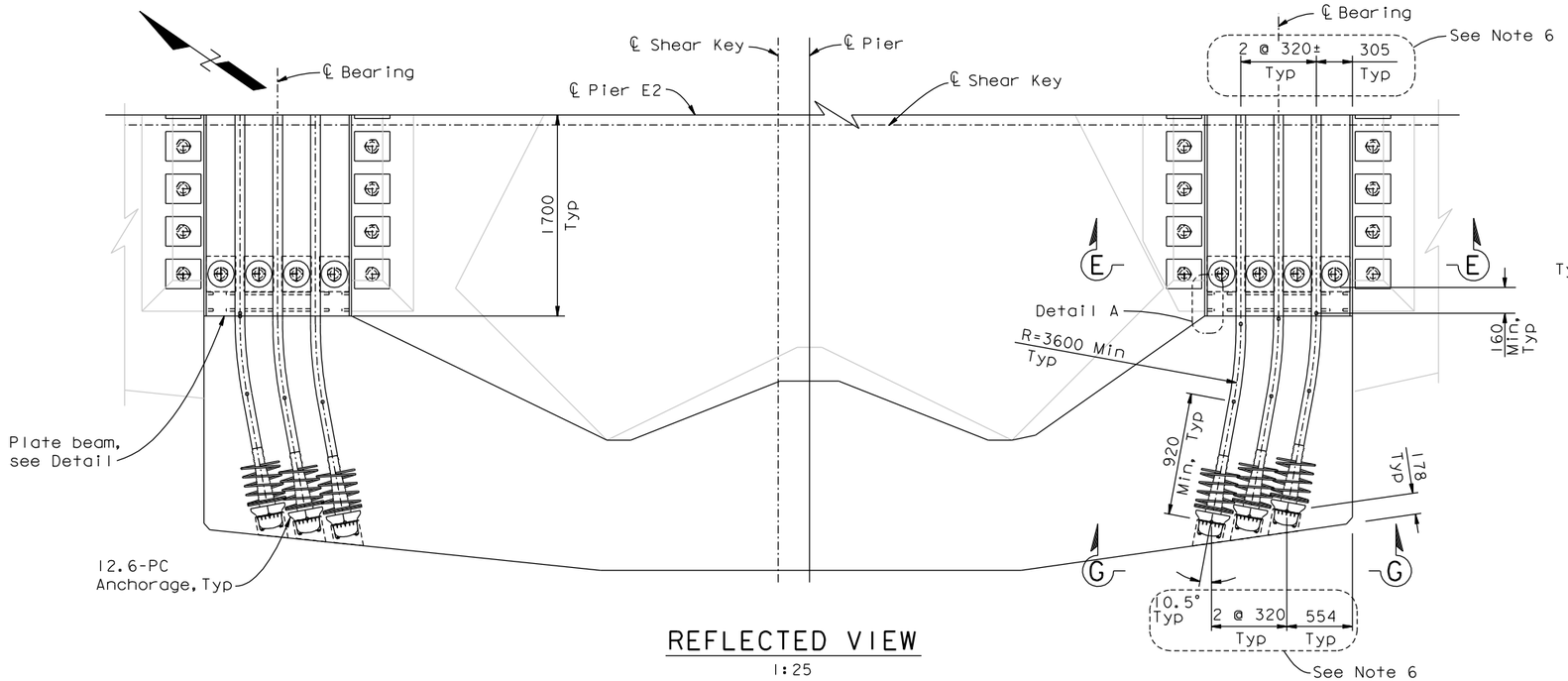


REFLECTED VIEW
1:25

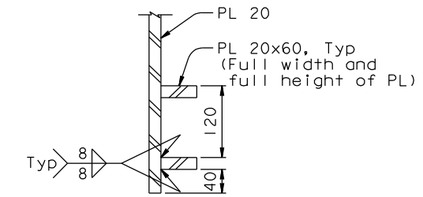


(PLATE BEAM END "KEYS")

DETAIL A
1:5

NOTE:
Typical keys for vertical and horizontal steel plates.

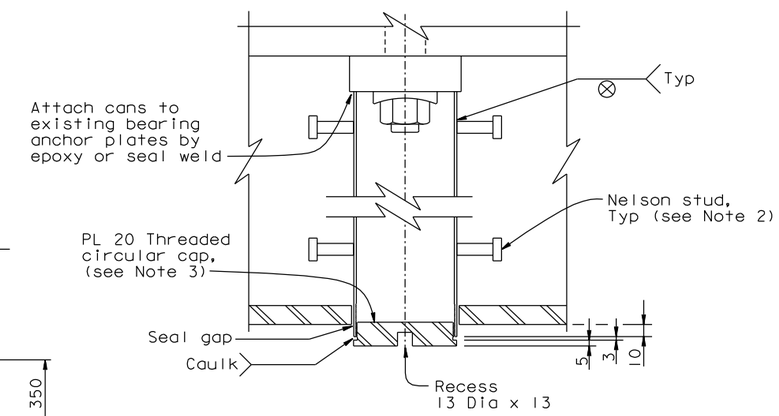


BEARING ANCHOR ROD CAN DETAIL
1:5

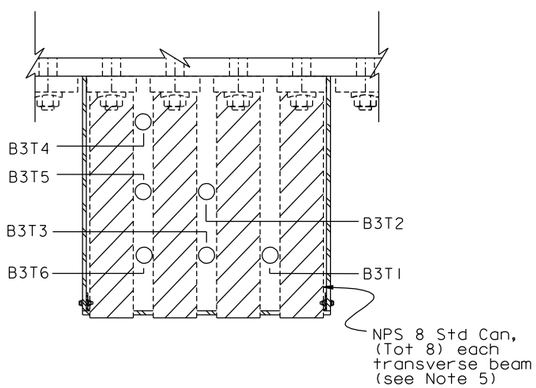


SECTION E-E
1:15

("B#" of Transverse Tendon name refers to Bearing number. Tendons at Bearing B3 Shown; Others Similar)

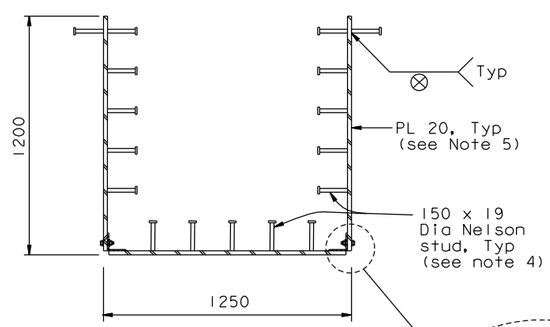


PLATE BEAM DETAIL
1:15

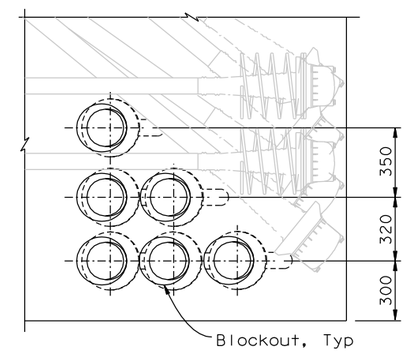


VIEW G-G
1:15

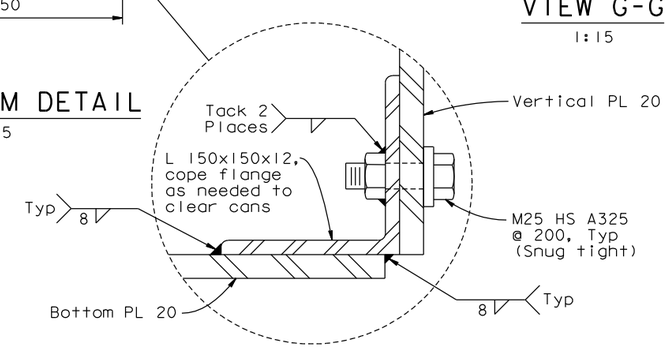


NOTES:

1. Site conditions may require corrugated duct to be deformed locally by ≤ 4mm each side of duct.
2. Six sets of four 75mm 10 Dia Nelson studs shall be placed radially staggered along length of NPS pipes.
3. The threaded cap shall be supplied with two recesses spaced apart such that the cap can be installed with the aid of a spanner wrench. The recesses shall not penetrate the plate. Threads shall follow ANSI standards.
4. Nelson studs shall be spaced at 200 each way on all interior faces of box (stagger placement on sides and bottom). On exterior, place studs at 360; locate between bearing anchor bolts.
5. Steel pipes shall be galvanized. Steel plates shall be primed in shop.
6. Dimensions may be adjusted to account for as built locations of bearing anchor rods.

CONTRACT CHANGE ORDER NO. _____
SHEET ____ OF ____

*REQUESTS FOR INFORMATION NOT ADDRESSED IN THIS CCO REMAIN IN FORCE*

ALL DIMENSIONS ARE IN MILLIMETERS UNLESS OTHERWISE SHOWN

A. Akinsanya / W. Long
DESIGN OVERSIGHT
SIGN OFF DATE 07/01/13

| MARK | DATE | DESCRIPTIONS | BY | CH'D | CCO# |
|---|---|---|---|---|---|
| 0 | 07/01/13 | PIER E2 PLANS | AS | MN | 331 |

REVISIONS

| | | | |
|---|---|---|---|
| DESIGN | BY A. Sanjines | CHECKED | S. Rodriguez |
| DETAILS | BY C. Hovell | CHECKED | H. Patel |
| QUANTITIES | BY N. Vo | CHECKED | J. Grove |

PREPARED FOR THE STATE OF CALIFORNIA DEPARTMENT OF TRANSPORTATION

M. Nader
PROJECT ENGINEER

BRIDGE NO. 34-0006L/R
KILOMETER POST 13.2/13.9

SAN FRANCISCO OAKLAND BAY BRIDGE
EAST SPAN SEISMIC SAFETY PROJECT
SELF-ANCHORED SUSPENSION BRIDGE
(SUPERSTRUCTURE & TOWER)

S1 & S2 NEW DESIGN: P.T. DETAILS NO. 1

Rev. Date: 5-22-13

ORIGINAL SCALE IN MILLIMETERS FOR REDUCED PLANS 0 10 20 30 40 50 60 70 80 90 100

CU 04
EA 0120F1

DISREGARD PRINTS BEARING EARLIER REVISION DATES

REVISION DATES (PRELIMINARY STAGE ONLY) 07/01/13

SHEET 102S10 OF

FILE => L:\BB\04-012001\SAS\Contract Plans and CCO\CCO\CCO*331\1-Original 07-01-13\DGN\aepir20.dgn

USERNAME => arivera DATE PLOTTED => 03 JUL 2013 TIME PLOTTED => 16:56:13

100% PS&E

| DIST. | COUNTY | ROUTE | KILOMETER POST TOTAL PROJECT | SHEET NO. | TOTAL SHEETS |
|---|---|---|---|---|---|
| 04 | SF | 80 | 13.2/13.9 | 519S11 | 1204 |

Caltrans Metric

REGISTERED ENGINEER - CIVIL

07-01-13

PLANS APPROVAL DATE

REGISTERED PROFESSIONAL ENGINEER Marwan N. Nader No. C 054426 Exp. 12/31/13 CIVIL STATE OF CALIFORNIA

*The State of California or its officers or agents shall not be responsible for the accuracy or completeness of electronic copies of this plan sheet.*

T.Y. LIN / MOFFATT & NICHOL
825 BATTERY STREET
SAN FRANCISCO, CA 94111

*Caltrans now has a web site! To get to the web site, go to: http://www.dot.ca.gov*

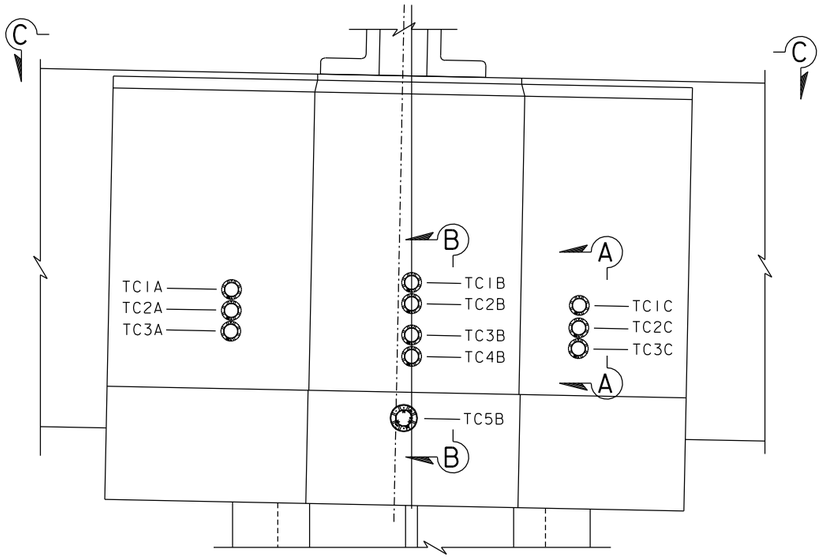


## TENDON ID'S

1:50

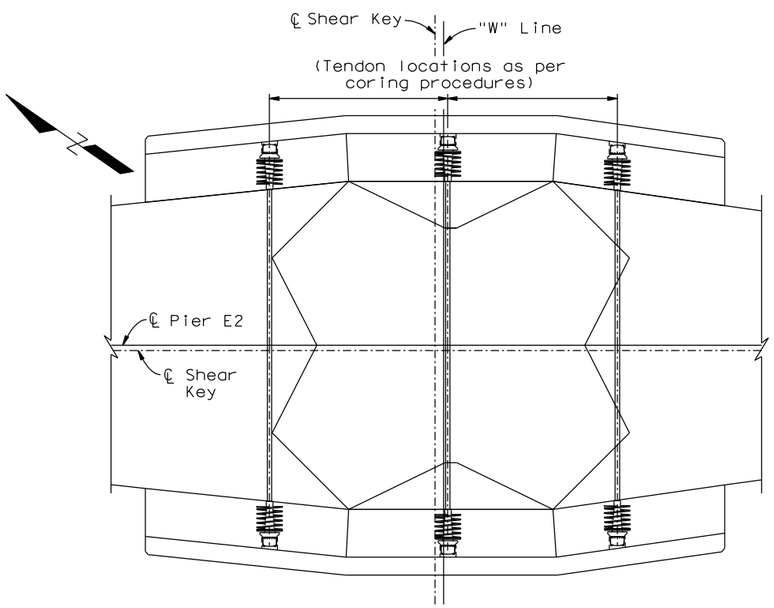


## PLAN VIEW C-C

1:50

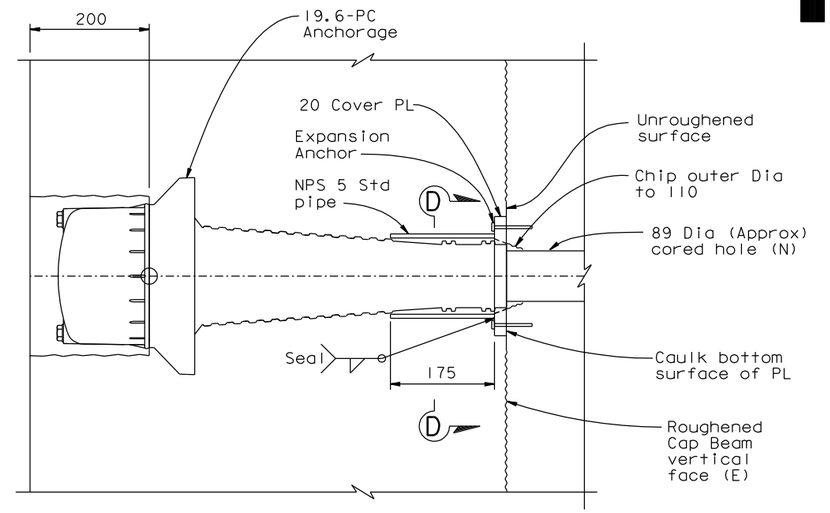


## PARTIAL SECTION A-A

1:5

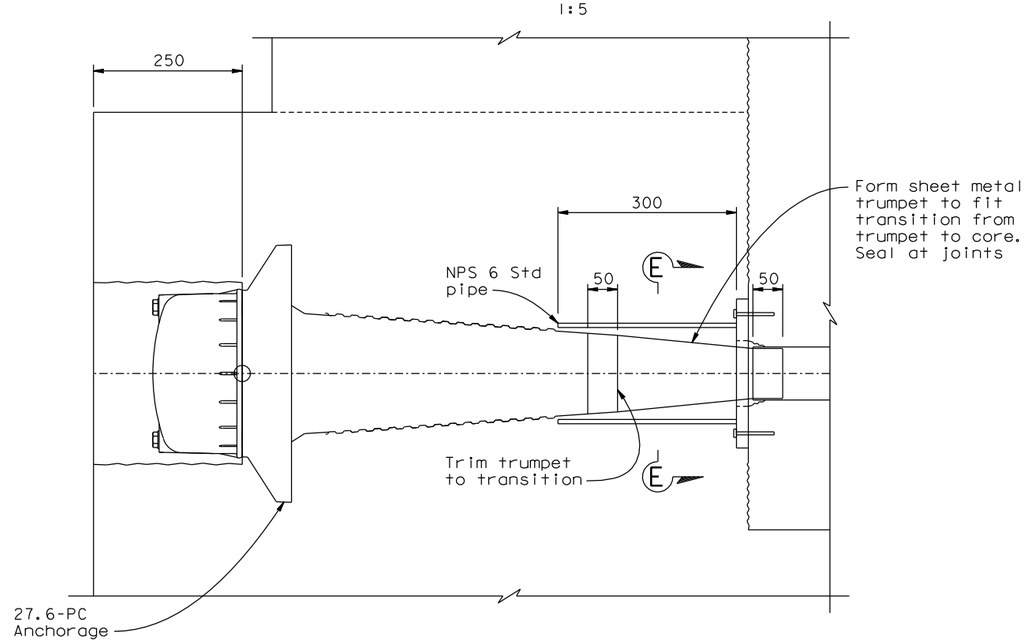


## PARTIAL SECTION B-B

1:5

(See Partial Section A-A for connection details not shown)

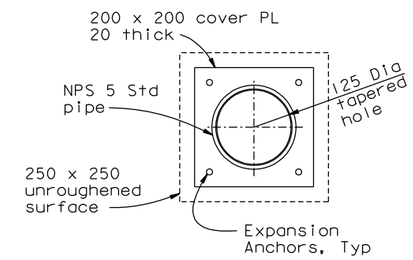


## SECTION D-D

1:5

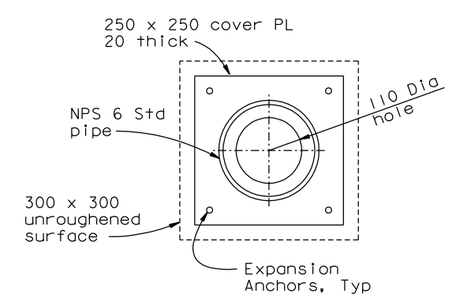


## SECTION E-E

1:5

CONTRACT CHANGE ORDER NO. _____
SHEET ____ OF ____

*REQUESTS FOR INFORMATION NOT ADDRESSED IN THIS CCO REMAIN IN FORCE*

ALL DIMENSIONS ARE IN MILLIMETERS UNLESS OTHERWISE SHOWN

A. Akinsanya / W. Long
DESIGN OVERSIGHT
SIGN OFF DATE 07/01/13

| MARK | DATE | DESCRIPTIONS | BY | CH'D | CCO# |
|---|---|---|---|---|---|
| 0 | 07/01/13 | PIER E2 PLANS | AS | MN | 331 |

REVISIONS

| | | | |
|---|---|---|---|
| DESIGN | BY A. Sanjines | CHECKED S. Rodriguez | |
| DETAILS | BY C. Hovell | CHECKED H. Patel | |
| QUANTITIES | BY N. Vo | CHECKED J. Grove | |

**PREPARED FOR THE STATE OF CALIFORNIA DEPARTMENT OF TRANSPORTATION**

M. Nader
PROJECT ENGINEER

BRIDGE NO. 34-0006L/R
KILOMETER POST 13.2/13.9

SAN FRANCISCO OAKLAND BAY BRIDGE
EAST SPAN SEISMIC SAFETY PROJECT
SELF-ANCHORED SUSPENSION BRIDGE
(SUPERSTRUCTURE & TOWER)

**S1 & S2 NEW DESIGN: P.T. DETAILS NO.2**

Rev. Date: 5-22-13

ORIGINAL SCALE IN MILLIMETERS FOR REDUCED PLANS 0 10 20 30 40 50 60 70 80 90 100

CU 04
EA 0120F1

DISREGARD PRINTS BEARING EARLIER REVISION DATES 07/01/13

REVISION DATES (PRELIMINARY STAGE ONLY)

SHEET 102S11 OF

FILE => I:\bb\04-012001\sas\contract plans and cco\cco\cco#331\1-original 07-01-13\dgn\aepir21.dgn

100 % PS&E

DATE PLOTTED => 03 JUL 2013 TIME PLOTTED => 14:37:41

USERNAME => PHUG

| DIST. | COUNTY | ROUTE | KILOMETER POST TOTAL PROJECT | SHEET NO. | TOTAL SHEETS |
|---|---|---|---|---|---|
| 04 | SF | 80 | 13.2/13.9 | 519S12 | 1204 |

REGISTERED ENGINEER - CIVIL

07-01-13

PLANS APPROVAL DATE

*The State of California or its officers or agents shall not be responsible for the accuracy or completeness of electronic copies of this plan sheet.*

REGISTERED PROFESSIONAL ENGINEER Marwan N. Nader No. C 054426 Exp. 12/31/13 CIVIL STATE OF CALIFORNIA

T.Y. LIN / MOFFATT & NICHOL
825 BATTERY STREET
SAN FRANCISCO, CA 94111

*Caltrans now has a web site! To get to the web site, go to: http://www.dot.ca.gov*

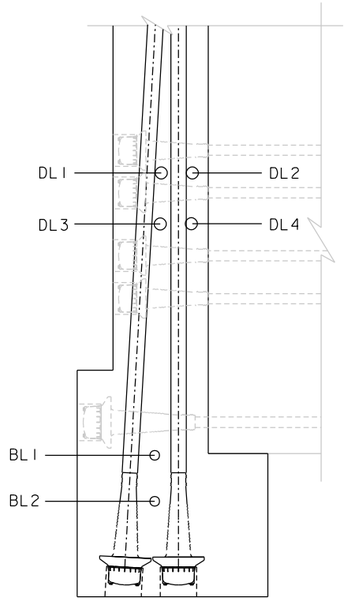


SECTION B-B
1:25

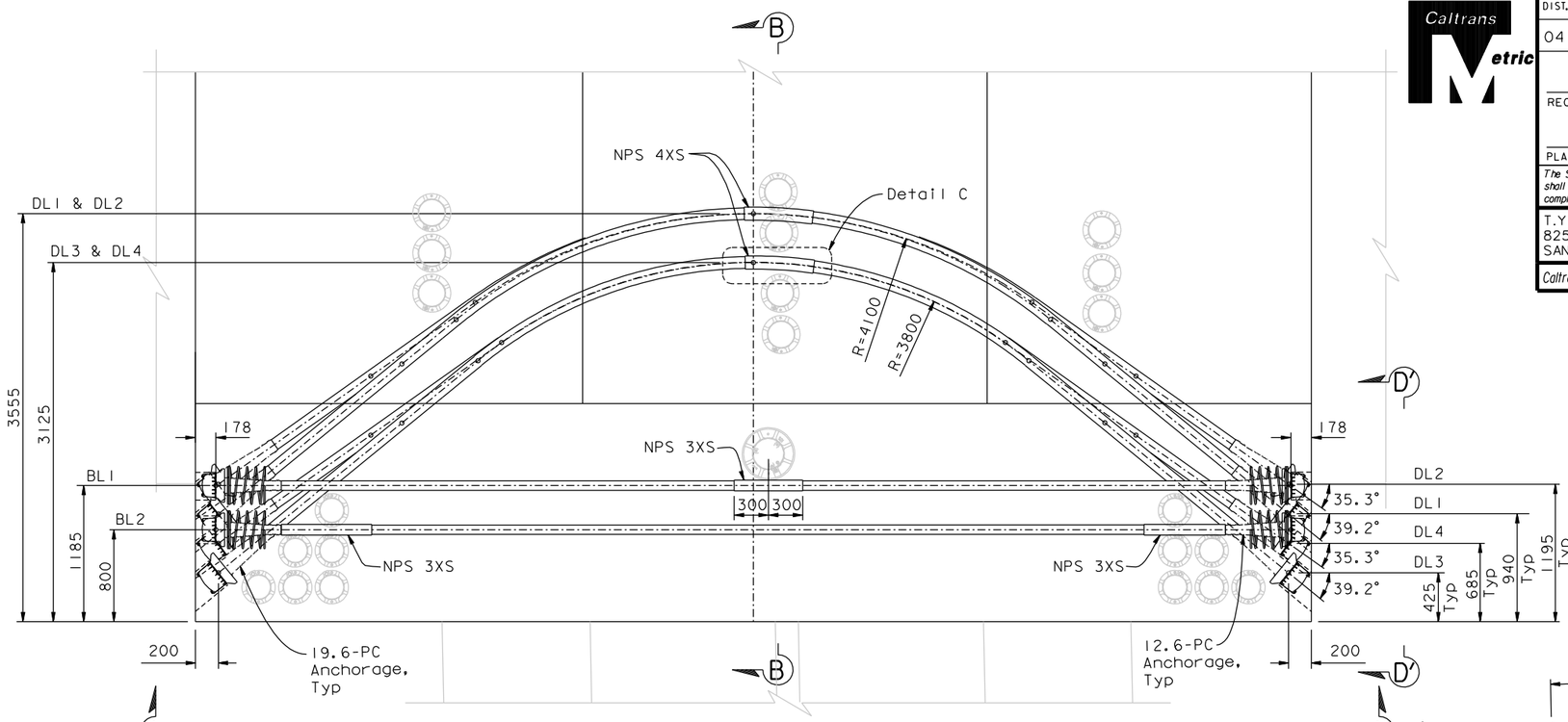


ELEVATION
1:25

(Vertical and top longitudinal tendons not shown for clarity)

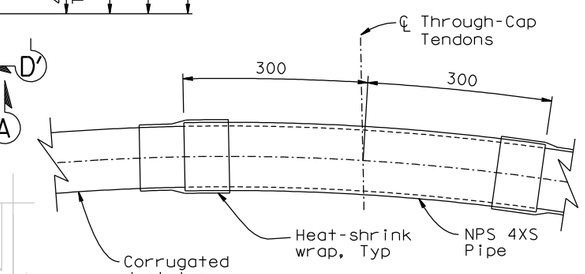


DETAIL C
1:5

(Draped tendons shown, others similar)

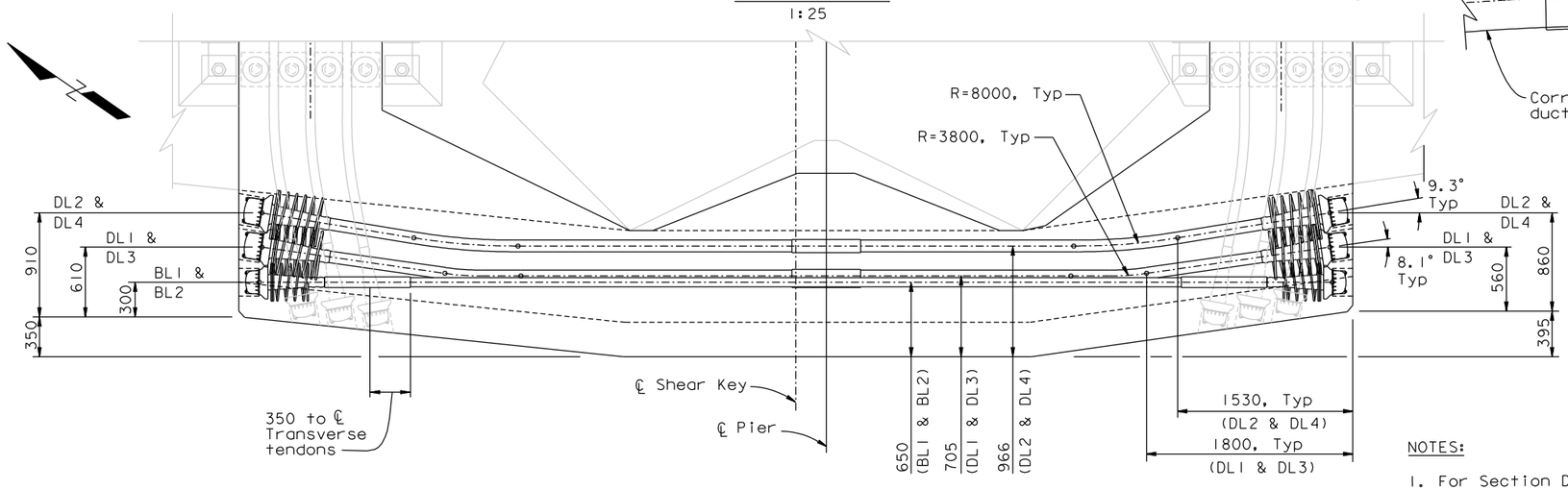


REFLECTED VIEW A-A
1:25

NOTES:

1. For Section D'-D', see "S1 & S2 New Design: Reinforcement Details No. 2" sheet.
2. Draped Tendons shall have grout vents at the high point of the tendon.

CONTRACT CHANGE ORDER NO. _____
SHEET ____ OF ____

*REQUESTS FOR INFORMATION NOT ADDRESSED IN THIS CCO REMAIN IN FORCE*

# BOTTOM & DRAPED LONGITUDINAL TENDON LAYOUT

ALL DIMENSIONS ARE IN MILLIMETERS UNLESS OTHERWISE SHOWN

A. Akinsanya / W. Long
DESIGN OVERSIGHT
SIGN OFF DATE 07/01/13

| MARK | DATE | DESCRIPTIONS | BY | CH'D | CCO# |
|---|---|---|---|---|---|
| 0 | 07/01/13 | PIER E2 PLANS | AS | MN | 331 |

REVISIONS

| | | | |
|---|---|---|---|
| DESIGN | BY A. Sanjines | CHECKED S. Rodriguez | |
| DETAILS | BY C. Hovell | CHECKED H. Patel | |
| QUANTITIES | BY N. Vo | CHECKED J. Grove | |

**PREPARED FOR THE STATE OF CALIFORNIA DEPARTMENT OF TRANSPORTATION**

M. Nader
PROJECT ENGINEER

BRIDGE NO. 34-0006L/R
KILOMETER POST 13.2/13.9

SAN FRANCISCO OAKLAND BAY BRIDGE
EAST SPAN SEISMIC SAFETY PROJECT
SELF-ANCHORED SUSPENSION BRIDGE
(SUPERSTRUCTURE & TOWER)

**S1 & S2 NEW DESIGN: P.T. DETAILS NO. 3**

Rev. Date: 5-22-13

ORIGINAL SCALE IN MILLIMETERS FOR REDUCED PLANS 0 10 20 30 40 50 60 70 80 90 100

CU 04
EA 0120F1

DISREGARD PRINTS BEARING EARLIER REVISION DATES 07/01/13

REVISION DATES (PRELIMINARY STAGE ONLY)

SHEET 102S12 OF

FILE => L:\BB\04-012001\SAS\Contract Plans and CCO\CCO\CCO#331\1-Original 07-01-13\DGN\aepir22.dgn

100 % PS&E

DATE PLOTTED => 03 JUL 2013 TIME PLOTTED => 17:02:43

USERNAME => orlivera

| DIST. | COUNTY | ROUTE | KILOMETER POST TOTAL PROJECT | SHEET NO. | TOTAL SHEETS |
|---|---|---|---|---|---|
| 04 | SF | 80 | 13.2/13.9 | 519S13 | 1204 |

REGISTERED ENGINEER - CIVIL

07-01-13

PLANS APPROVAL DATE

*The State of California or its officers or agents shall not be responsible for the accuracy or completeness of electronic copies of this plan sheet.*

REGISTERED PROFESSIONAL ENGINEER Marwan N. Nader No. C 054426 Exp. 12/31/13 CIVIL STATE OF CALIFORNIA

T.Y. LIN / MOFFATT & NICHOL
825 BATTERY STREET
SAN FRANCISCO, CA 94111

*Caltrans now has a web site! To get to the web site, go to: http://www.dot.ca.gov*

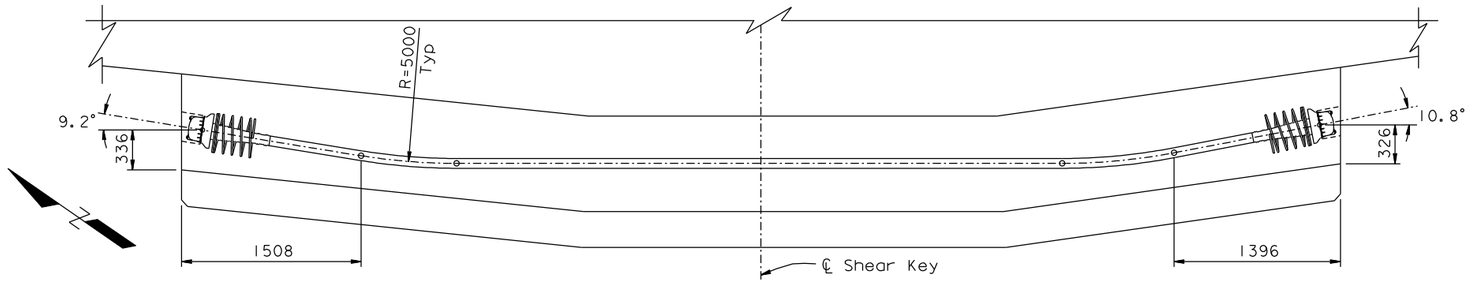


VIEW A-A
1:25

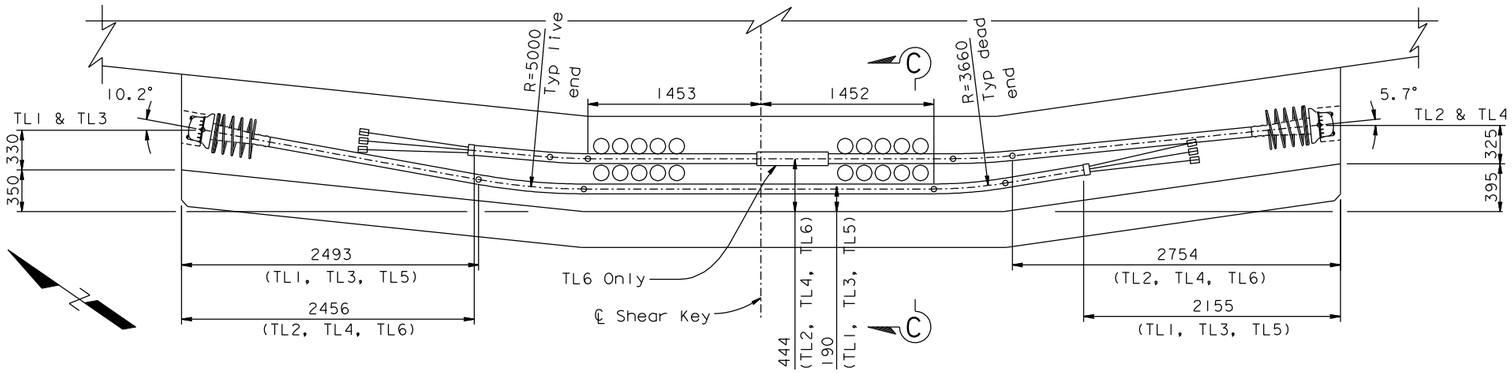


VIEW B-B
1:25

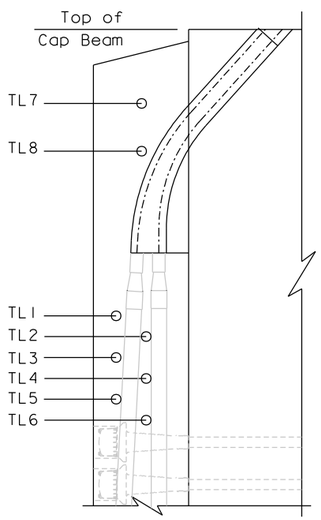


SECTION C-C
1:25

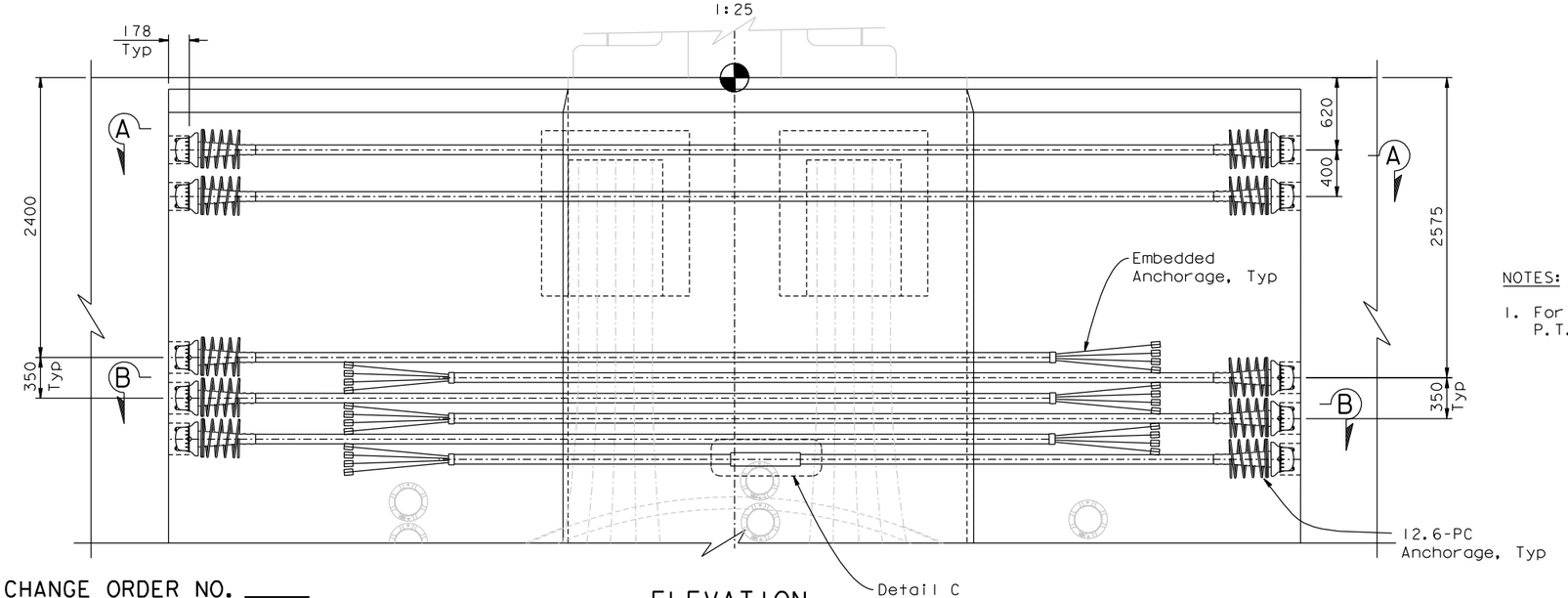


ELEVATION
1:25

NOTES:

1. For Detail C. see "S1 & S2 New Design: P.T. Details No.3" sheet.

TOP LONGITUDINAL TENDON LAYOUT

CONTRACT CHANGE ORDER NO. ____
SHEET ___ OF ___

*REQUESTS FOR INFORMATION NOT ADDRESSED IN THIS CCO REMAIN IN FORCE*

ALL DIMENSIONS ARE IN MILLIMETERS UNLESS OTHERWISE SHOWN

A. Akinsanya / W. Long
DESIGN OVERSIGHT
SIGN OFF DATE 07/01/13

| MARK | DATE | DESCRIPTIONS | BY | CH'D | CCO# |
|---|---|---|---|---|---|
| 0 | 07/01/13 | PIER E2 PLANS | AS | MN | 331 |

REVISIONS

| | | | |
|---|---|---|---|
| DESIGN | BY A. Sanjines | CHECKED S. Rodriguez | |
| DETAILS | BY C. Hovell | CHECKED H. Patel | |
| QUANTITIES | BY N. Vo | CHECKED J. Grove | |

**PREPARED FOR THE STATE OF CALIFORNIA DEPARTMENT OF TRANSPORTATION**

M. Nader
PROJECT ENGINEER

BRIDGE NO. 34-0006L/R
KILOMETER POST 13.2/13.9

SAN FRANCISCO OAKLAND BAY BRIDGE
EAST SPAN SEISMIC SAFETY PROJECT
SELF-ANCHORED SUSPENSION BRIDGE
(SUPERSTRUCTURE & TOWER)

**S1 & S2 NEW DESIGN: P.T. DETAILS NO. 4**

Rev. Date: 5-22-13

ORIGINAL SCALE IN MILLIMETERS FOR REDUCED PLANS 0 10 20 30 40 50 60 70 80 90 100

CU 04
EA 0120F1

DISREGARD PRINTS BEARING EARLIER REVISION DATES 07/01/13

REVISION DATES (PRELIMINARY STAGE ONLY)

SHEET 102S13 OF

FILE => I:\bb\04-012001\sas\contract plans and cco\cco\cco#331\1-original 07-01-13\dgn\aepir23.dgn

100 % PS&E

DATE PLOTTED => 03 JUL 2013 TIME PLOTTED => 14:41:54

USERNAME => msmith

| DIST. | COUNTY | ROUTE | KILOMETER POST TOTAL PROJECT | SHEET NO. | TOTAL SHEETS |
|---|---|---|---|---|---|
| 04 | SF | 80 | 13.2/13.9 | 519S14 | 1204 |

REGISTERED ENGINEER - CIVIL

07-01-13

PLANS APPROVAL DATE

*The State of California or its officers or agents shall not be responsible for the accuracy or completeness of electronic copies of this plan sheet.*

REGISTERED PROFESSIONAL ENGINEER Marwan N. Nader No. C 054426 Exp. 12/31/13 CIVIL STATE OF CALIFORNIA

T.Y. LIN / MOFFATT & NICHOL
825 BATTERY STREET
SAN FRANCISCO, CA 94111

*Caltrans now has a web site! To get to the web site, go to: http://www.dot.ca.gov*

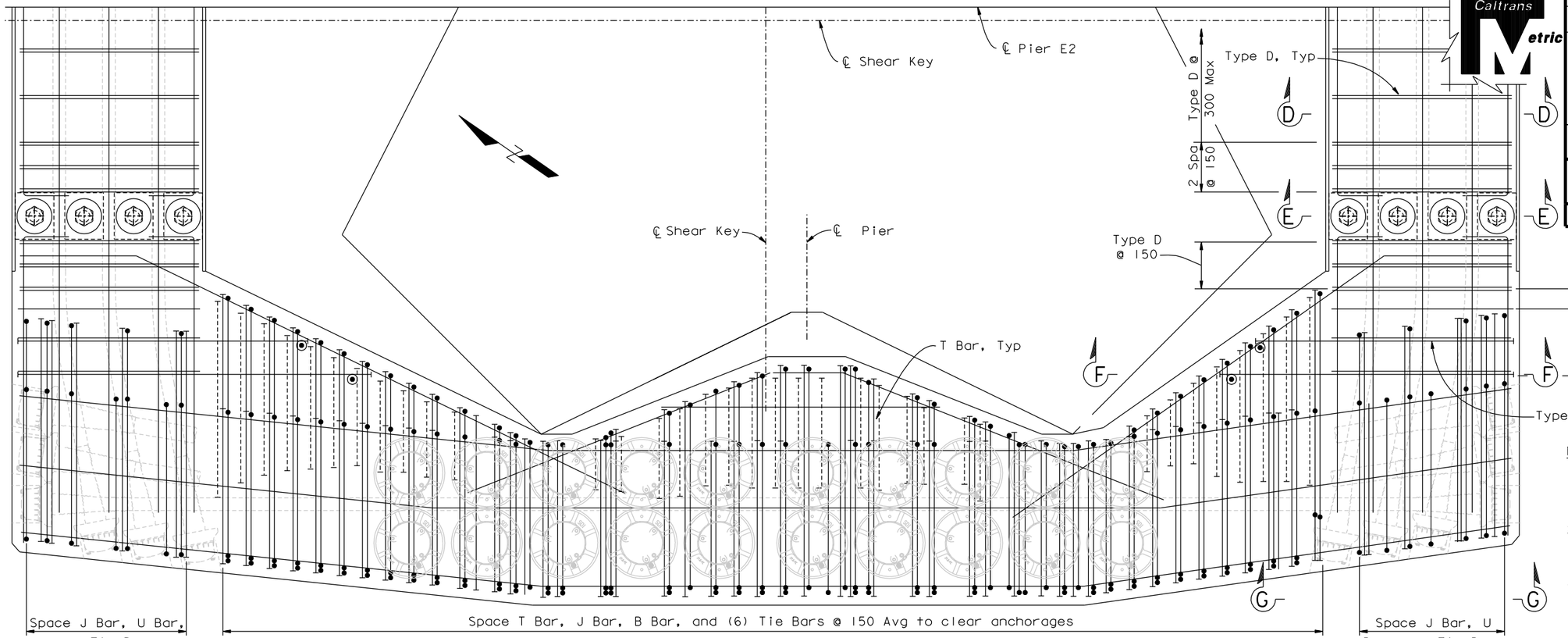


## REFLECTED PLAN

1:15

NOTES:

1. For Sections A'-A', B'-B', E'-E', and View D', see "S1 & S2 New Design: Reinforcement Details No.2" sheet.
2. For Sections D-D and F-F, see "S1 & S2 New Design: Reinforcement Details No.3" sheet.
3. For Section E-E, see "S1 & S2 New Design: P.T. Details No.1" sheet.

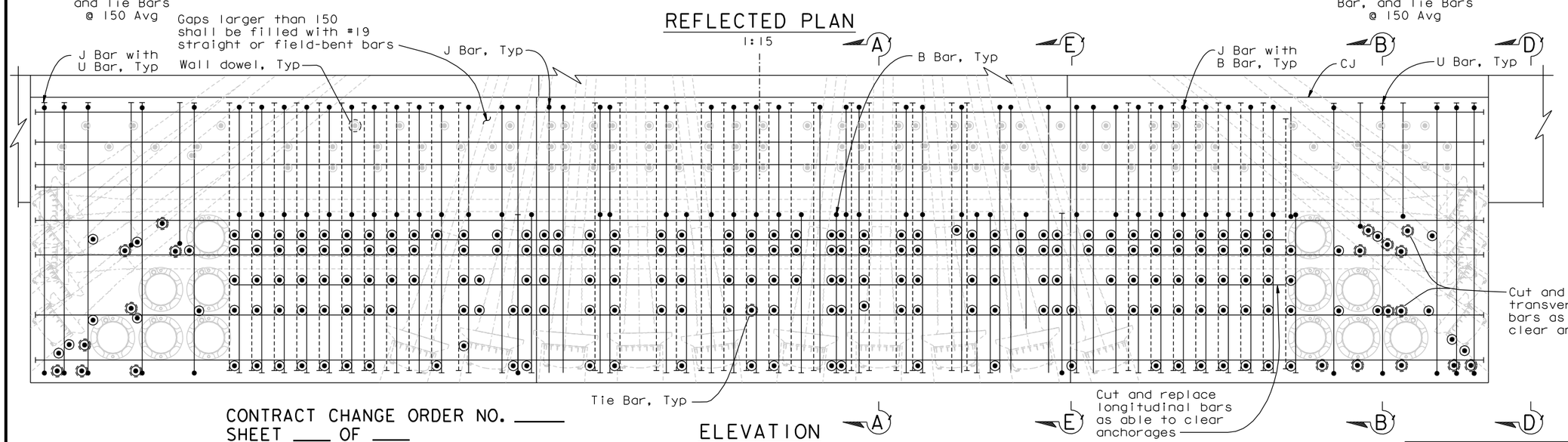


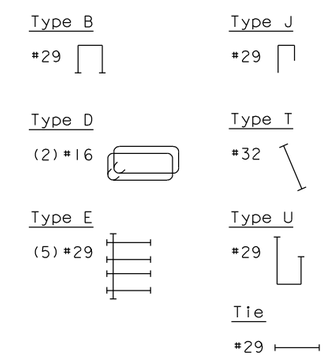


## ELEVATION

1:15

CONTRACT CHANGE ORDER NO. ____
SHEET ____ OF ____

*REQUESTS FOR INFORMATION NOT ADDRESSED IN THIS CCO REMAIN IN FORCE*

ALL DIMENSIONS ARE IN MILLIMETERS UNLESS OTHERWISE SHOWN

A. Akinsanya / W. Long
DESIGN OVERSIGHT
SIGN OFF DATE 07/01/13

| MARK | DATE | DESCRIPTIONS | BY | CH'D | CCO# |
|---|---|---|---|---|---|
| 0 | 07/01/13 | RXERX2 PLANS | XS | MM | 331 |

REVISIONS

| | | | |
|---|---|---|---|
| DESIGN | BY A. Sanjines | CHECKED S. Rodriguez | |
| DETAILS | BY M. Benoit | CHECKED H. Patel | |
| QUANTITIES | BY N. Vo | CHECKED J. Grove | |

**PREPARED FOR THE STATE OF CALIFORNIA DEPARTMENT OF TRANSPORTATION**

M. Nader
PROJECT ENGINEER

BRIDGE NO. 34-0006L/R
KILOMETER POST 13.2/13.9

SAN FRANCISCO OAKLAND BAY BRIDGE
EAST SPAN SEISMIC SAFETY PROJECT
SELF-ANCHORED SUSPENSION BRIDGE
(SUPERSTRUCTURE & TOWER)

# S1 & S2 NEW DESIGN: REINFORCEMENT DETAILS NO.1

Rev. Date: 5-22-13

ORIGINAL SCALE IN MILLIMETERS FOR REDUCED PLANS 0 10 20 30 40 50 60 70 80 90 100

CU 04
EA 0120F1

DISREGARD PRINTS BEARING EARLIER REVISION DATES

REVISION DATES (PRELIMINARY STAGE ONLY) 07/01/13

SHEET 102S14 OF

FILE => I:\bb\04-012001\sas\contract plans and cco\cco\cco#331\1-original 07-01-13\dgn\aepir24.dgn

100 % PS&E

USERNAME => msmith DATE PLOTTED => 03 JUL 2013 TIME PLOTTED => 14:41:00

| DIST. | COUNTY | ROUTE | KILOMETER POST TOTAL PROJECT | SHEET NO. | TOTAL SHEETS |
|---|---|---|---|---|---|
| 04 | SF | 80 | 13.2/13.9 | 519S15 | 1204 |

REGISTERED ENGINEER - CIVIL

07-01-13

PLANS APPROVAL DATE

REGISTERED PROFESSIONAL ENGINEER Marwan N. Nader No. C 054426 Exp. 12/31/13 CIVIL STATE OF CALIFORNIA

*The State of California or its officers or agents shall not be responsible for the accuracy or completeness of electronic copies of this plan sheet.*

T.Y. LIN / MOFFATT & NICHOL
825 BATTERY STREET
SAN FRANCISCO, CA 94111

*Caltrans now has a web site! To get to the web site, go to: http://www.dot.ca.gov*

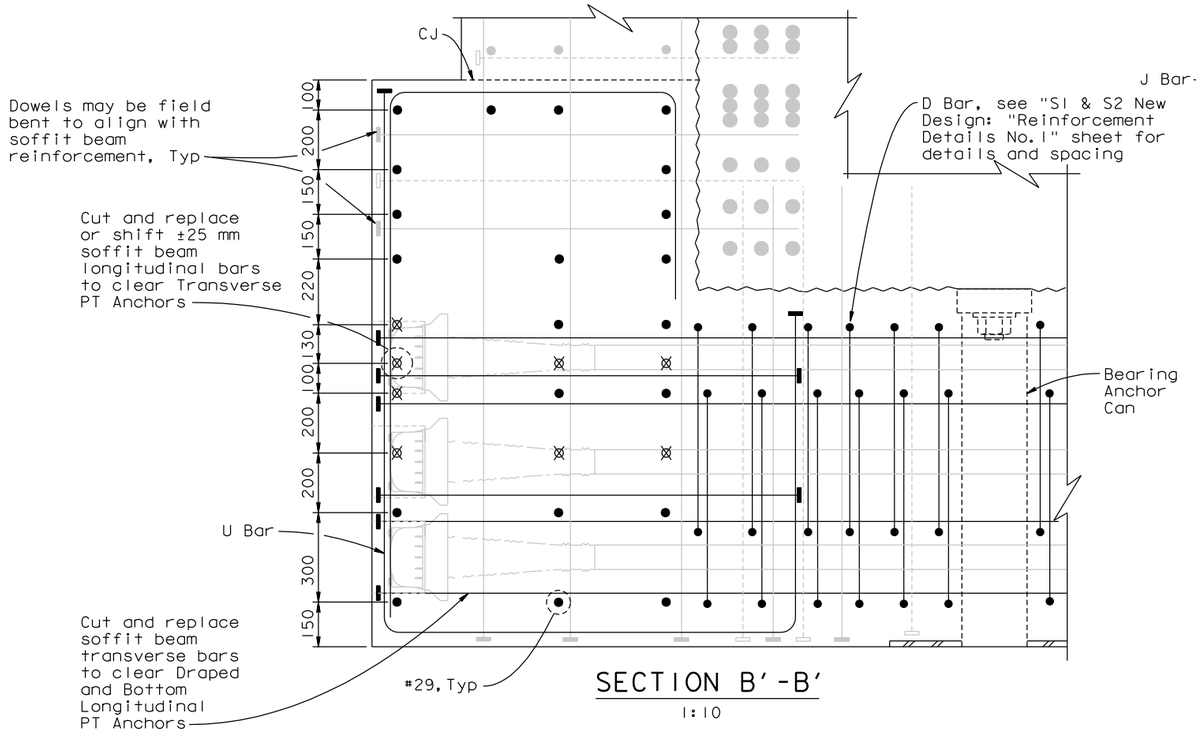


SECTION B'-B'
1:10

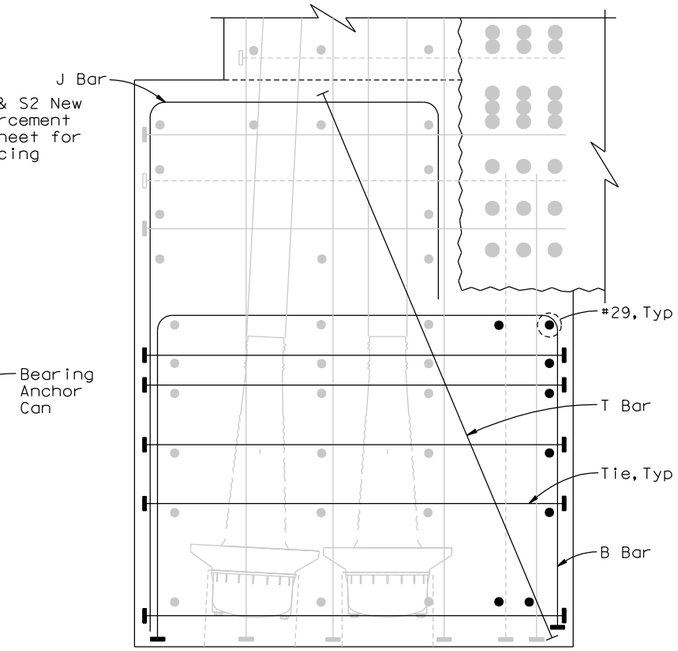


SECTION A'-A'
1:10

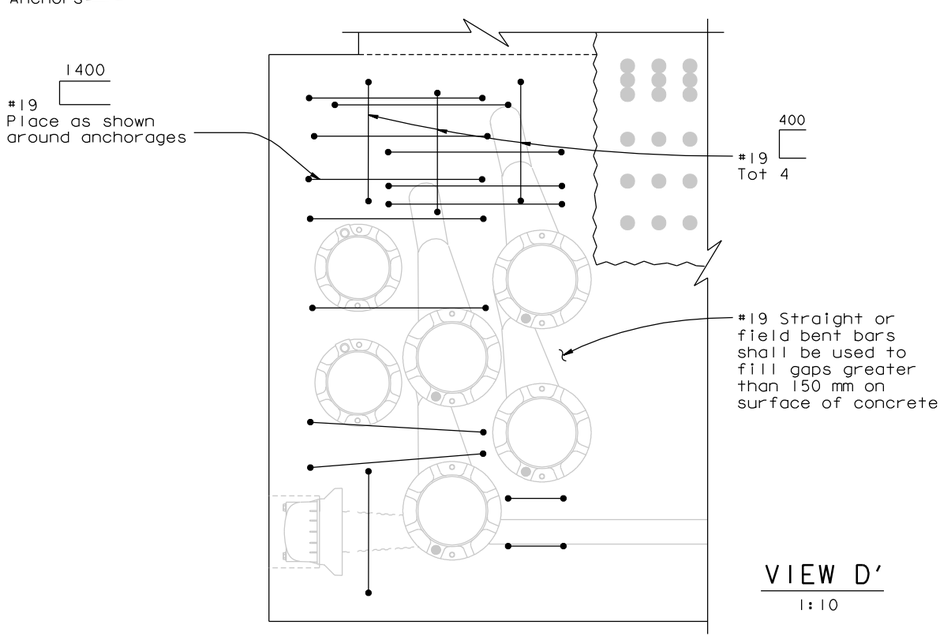


VIEW D'
1:10

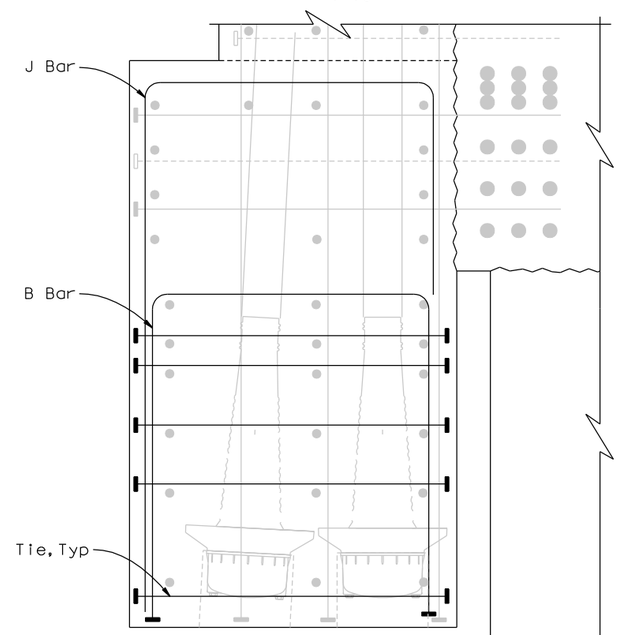


SECTION E'-E'
1:10

Type B
#29

Type U
#29

Type D
(2) #16

Type J
#29

Type T
#32

Tie
#29

NOTES:

1. See Section B'-B' for typical soffit beam reinforcement not shown in Sections A'-A', D'-D' and E'-E'.
2. See "S1 & S2 New Design: Construction Details No.4" and "S1 & S2 New Design: Construction Details No.5" sheets for dowel details. Not all dowels are shown for clarity.
3. See "S1 & S2 New Design: Reinforcement Details No.4" sheet for typical wall reinforcement.
4. See "S1 & S2 New Design: P.T. Details No.1" for bearing anchor can detail.

CONTRACT CHANGE ORDER NO. _____
SHEET ____ OF ____

*REQUESTS FOR INFORMATION NOT ADDRESSED IN THIS CCO REMAIN IN FORCE*

ALL DIMENSIONS ARE IN MILLIMETERS UNLESS OTHERWISE SHOWN

A. Akinsanya / W. Long
DESIGN OVERSIGHT
SIGN OFF DATE 07/01/13

| MARK | DATE | DESCRIPTIONS | BY | CH'D | CCO# |
|---|---|---|---|---|---|
| 0 | 07/01/13 | PIER E2 PLANS | AS | MN | 331 |

REVISIONS

| | | | |
|---|---|---|---|
| DESIGN | BY A. Sanjines | CHECKED S. Rodriguez | |
| DETAILS | BY M. Benoit | CHECKED H. Patel | |
| QUANTITIES | BY N. Vo | CHECKED J. Grove | |

**PREPARED FOR THE STATE OF CALIFORNIA DEPARTMENT OF TRANSPORTATION**

M. Nader
PROJECT ENGINEER

BRIDGE NO. 34-0006L/R
KILOMETER POST 13.2/13.9

SAN FRANCISCO OAKLAND BAY BRIDGE
EAST SPAN SEISMIC SAFETY PROJECT
SELF-ANCHORED SUSPENSION BRIDGE
(SUPERSTRUCTURE & TOWER)

**S1 & S2 NEW DESIGN: REINFORCEMENT DETAILS NO.2**

Rev. Date: 5-22-13

ORIGINAL SCALE IN MILLIMETERS FOR REDUCED PLANS 0 10 20 30 40 50 60 70 80 90 100

CU 04
EA 0120F1

DISREGARD PRINTS BEARING EARLIER REVISION DATES

REVISION DATES (PRELIMINARY STAGE ONLY) 07/01/13

SHEET 102S15 OF

FILE => I:\bb\04-012001\sas\contract plans and cco\cco\cco#331\1-original 07-01-13\dgn\aepir25.dgn

100% PS&E

USERNAME => msmith DATE PLOTTED => 03 JUL 2013 TIME PLOTTED => 14:40:27

| DIST. | COUNTY | ROUTE | KILOMETER POST TOTAL PROJECT | SHEET NO. | TOTAL SHEETS |
|---|---|---|---|---|---|
| 04 | SF | 80 | 13.2/13.9 | 519S16 | 1204 |

REGISTERED ENGINEER - CIVIL

07-01-13

PLANS APPROVAL DATE

REGISTERED PROFESSIONAL ENGINEER Marwan N. Nader No. C 054426 Exp. 12/31/13 CIVIL STATE OF CALIFORNIA

*The State of California or its officers or agents shall not be responsible for the accuracy or completeness of electronic copies of this plan sheet.*

T.Y. LIN / MOFFATT & NICHOL
825 BATTERY STREET
SAN FRANCISCO, CA 94111

*Caltrans now has a web site! To get to the web site, go to: http://www.dot.ca.gov*

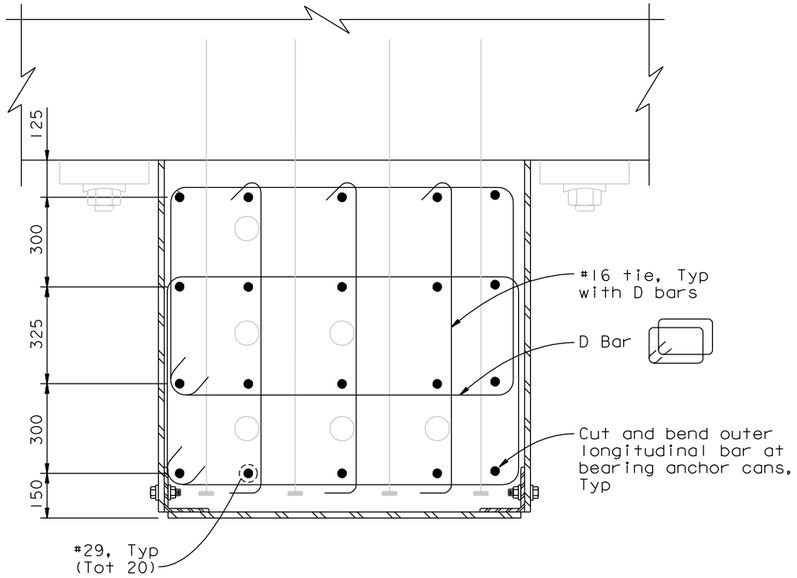


SECTION D-D
1:10

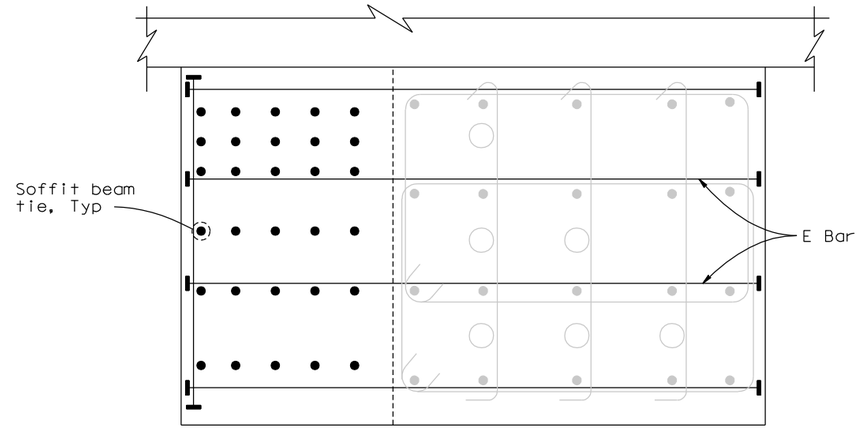


SECTION F-F
1:10

Type D
(2) #16

Type E
(5) #29

Tie
#29

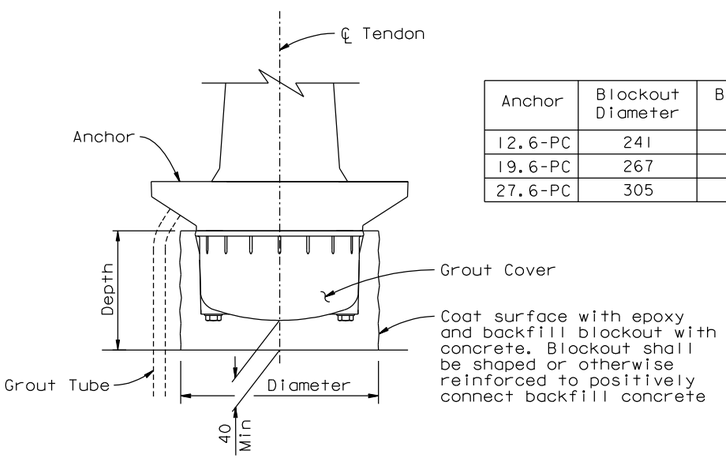


| Anchor | Blockout Diameter | Blockout Depth |
|---|---|---|
| 12.6-PC | 241 | 178 |
| 19.6-PC | 267 | 200 |
| 27.6-PC | 305 | 250 |

TYPICAL ANCHORAGE BLOCKOUT DETAIL
1:5

CONTRACT CHANGE ORDER NO. _____
SHEET ____ OF ____

*REQUESTS FOR INFORMATION NOT ADDRESSED IN THIS CCO REMAIN IN FORCE*

ALL DIMENSIONS ARE IN MILLIMETERS UNLESS OTHERWISE SHOWN

A. Akinsanya / W. Long
DESIGN OVERSIGHT
SIGN OFF DATE 07/01/13

| MARK | DATE | DESCRIPTIONS | BY | CH'D | CCO# |
|---|---|---|---|---|---|
| 0 | 07/01/13 | PIER E2 PLANS | AS | MN | 331 |

REVISIONS

| | | | |
|---|---|---|---|
| DESIGN | BY A. Sanjines | CHECKED S. Rodriguez | |
| DETAILS | BY M. Benoit | CHECKED H. Patel | |
| QUANTITIES | BY N. Vo | CHECKED J. Grove | |

**PREPARED FOR THE STATE OF CALIFORNIA DEPARTMENT OF TRANSPORTATION**

M. Nader
PROJECT ENGINEER

BRIDGE NO. 34-0006L/R
KILOMETER POST 13.2/13.9

SAN FRANCISCO OAKLAND BAY BRIDGE
EAST SPAN SEISMIC SAFETY PROJECT
SELF-ANCHORED SUSPENSION BRIDGE
(SUPERSTRUCTURE & TOWER)

**S1 & S2 NEW DESIGN: REINFORCEMENT DETAILS NO.3**

Rev. Date: 5-22-13

ORIGINAL SCALE IN MILLIMETERS FOR REDUCED PLANS 0 10 20 30 40 50 60 70 80 90 100

CU 04
EA 0120F1

DISREGARD PRINTS BEARING EARLIER REVISION DATES → 07/01/13

REVISION DATES (PRELIMINARY STAGE ONLY)

SHEET 102S16 OF

FILE => L:\BB\04-012001\SAS\Contract Plans and CCO\CCO\CCO#331\1-Original 07-01-13\DGN\aepir26.dgn

100% PS&E

USERNAME => arivera DATE PLOTTED => 03 JUL 2013 TIME PLOTTED => 17:04:27

| DIST. | COUNTY | ROUTE | KILOMETER POST TOTAL PROJECT | SHEET NO. | TOTAL SHEETS |
|---|---|---|---|---|---|
| 04 | SF | 80 | 13.2/13.9 | 519S17 | 1204 |

REGISTERED ENGINEER - CIVIL

07-01-13

PLANS APPROVAL DATE

REGISTERED PROFESSIONAL ENGINEER Marwan N. Nader No. C 054426 Exp. 12/31/13 CIVIL STATE OF CALIFORNIA

*The State of California or its officers or agents shall not be responsible for the accuracy or completeness of electronic copies of this plan sheet.*

T.Y. LIN / MOFFATT & NICHOL
825 BATTERY STREET
SAN FRANCISCO, CA 94111

*Caltrans now has a web site! To get to the web site, go to: http://www.dot.ca.gov*

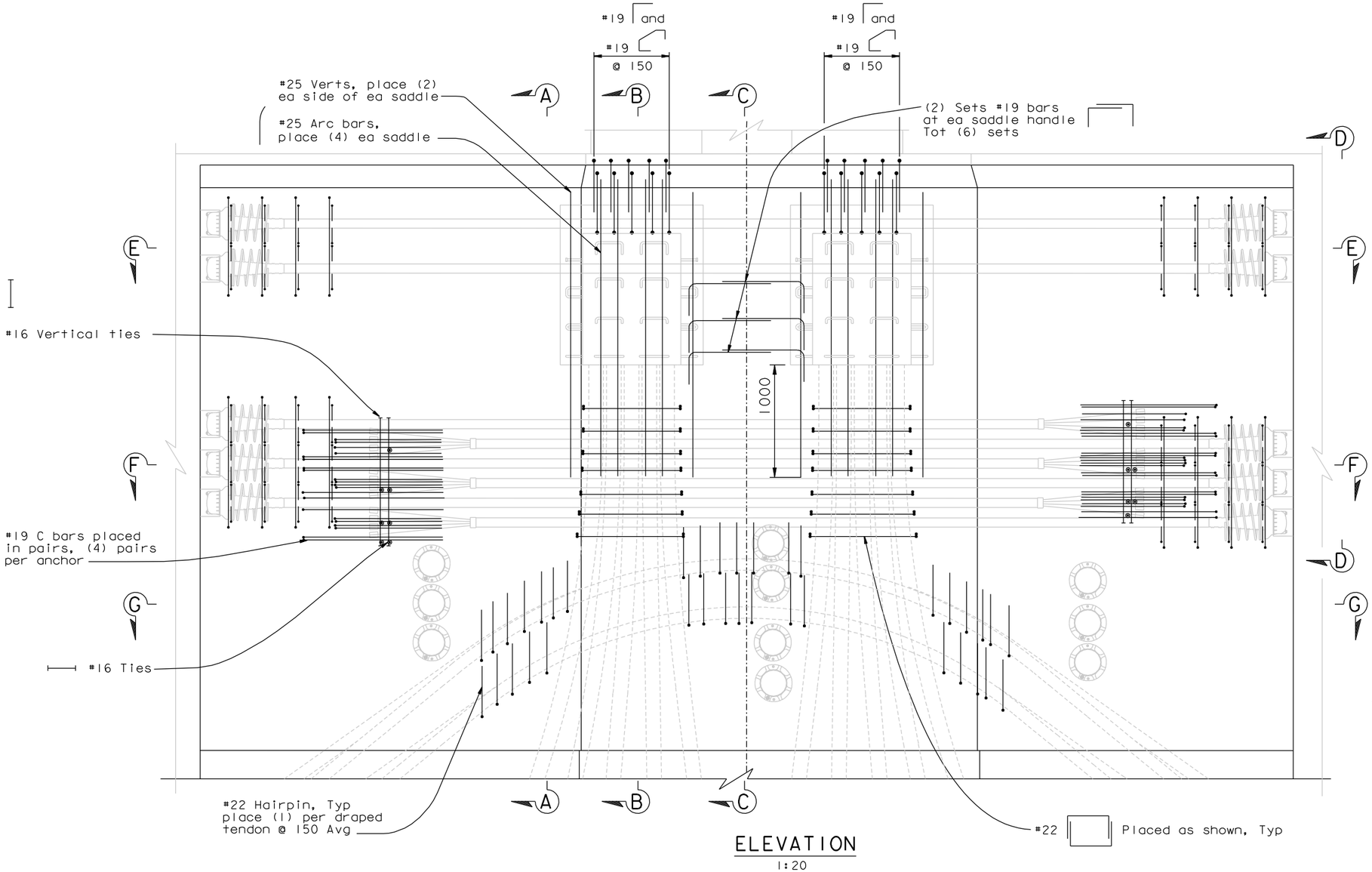


ELEVATION
1:20

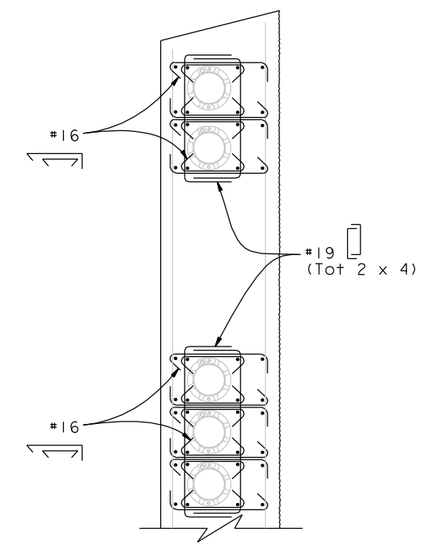


VIEW D-D
1:20
(Ties shall engage horizontal or vertical bars; rotate to fit)

NOTES:

1. Typical wall reinforcement not shown; see "S1 & S2 New Design: Reinforcement Details No.4" and "S1 & S2 New Design: Reinforcement Details No.5" sheets.
2. Sections E-E, F-F, and G-G can be found on "S1 & S2 New Design: Reinforcement Details No.5" sheet.
3. Sections A-A, B-B, and C-C can be found on "S1 & S2 New Design: Reinforcement Details No.6 sheet.

CONTRACT CHANGE ORDER NO. ____
SHEET ___ OF ___

*REQUESTS FOR INFORMATION NOT ADDRESSED IN THIS CCO REMAIN IN FORCE*

ALL DIMENSIONS ARE IN MILLIMETERS UNLESS OTHERWISE SHOWN

A. Akinsanya / W. Long
DESIGN OVERSIGHT
SIGN OFF DATE 07/01/13

| MARK | DATE | DESCRIPTIONS | BY | CH'D | CCO# |
|---|---|---|---|---|---|
| 0 | 07/01/13 | PIER E2 PLANS | AS | MN | 331 |

REVISIONS

| | | | |
|---|---|---|---|
| DESIGN | BY A. Sanjines | CHECKED S. Rodriguez | |
| DETAILS | BY M. Benoit | CHECKED H. Patel | |
| QUANTITIES | BY N. Vo | CHECKED J. Grove | |

**PREPARED FOR THE STATE OF CALIFORNIA DEPARTMENT OF TRANSPORTATION**

M. Nader
PROJECT ENGINEER

BRIDGE NO. 34-0006L/R
KILOMETER POST 13.2/13.9

SAN FRANCISCO OAKLAND BAY BRIDGE
EAST SPAN SEISMIC SAFETY PROJECT
SELF-ANCHORED SUSPENSION BRIDGE
(SUPERSTRUCTURE & TOWER)

**S1 & S2 NEW DESIGN: REINFORCEMENT DETAILS NO.4**

Rev. Date: 5-22-13

ORIGINAL SCALE IN MILLIMETERS FOR REDUCED PLANS 0 10 20 30 40 50 60 70 80 90 100

CU 04
EA 0120F1

DISREGARD PRINTS BEARING EARLIER REVISION DATES 07/01/13

REVISION DATES (PRELIMINARY STAGE ONLY)

SHEET 102S17 OF

FILE => I:\bb\04-012001\sas\contract plans and cco\cco\cco#331\1-original 07-01-13\dgn\aepir27.dgn

100% PS&E

USERNAME => msmith DATE PLOTTED => 03 JUL 2013 TIME PLOTTED => 14:39:33

| DIST. | COUNTY | ROUTE | KILOMETER POST TOTAL PROJECT | SHEET NO. | TOTAL SHEETS |
|---|---|---|---|---|---|
| 04 | SF | 80 | 13.2/13.9 | 519S18 | 1204 |

REGISTERED ENGINEER - CIVIL

07-01-13

PLANS APPROVAL DATE

*The State of California or its officers or agents shall not be responsible for the accuracy or completeness of electronic copies of this plan sheet.*

REGISTERED PROFESSIONAL ENGINEER Marwan N. Nader No. C 054426 Exp. 12/31/13 CIVIL STATE OF CALIFORNIA

T.Y. LIN / MOFFATT & NICHOL
825 BATTERY STREET
SAN FRANCISCO, CA 94111

*Caltrans now has a web site! To get to the web site, go to: http://www.dot.ca.gov*

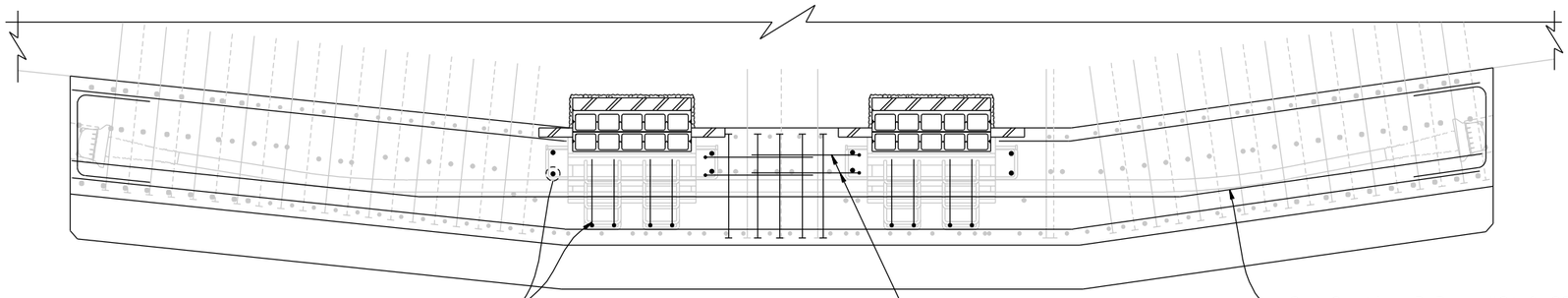


SECTION E-E
1:20

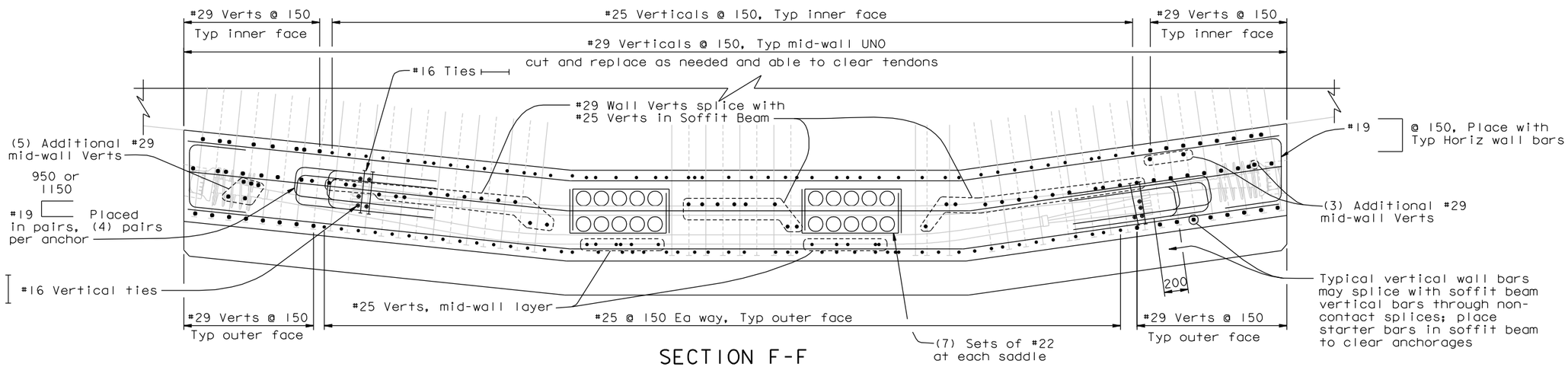


SECTION F-F
1:20

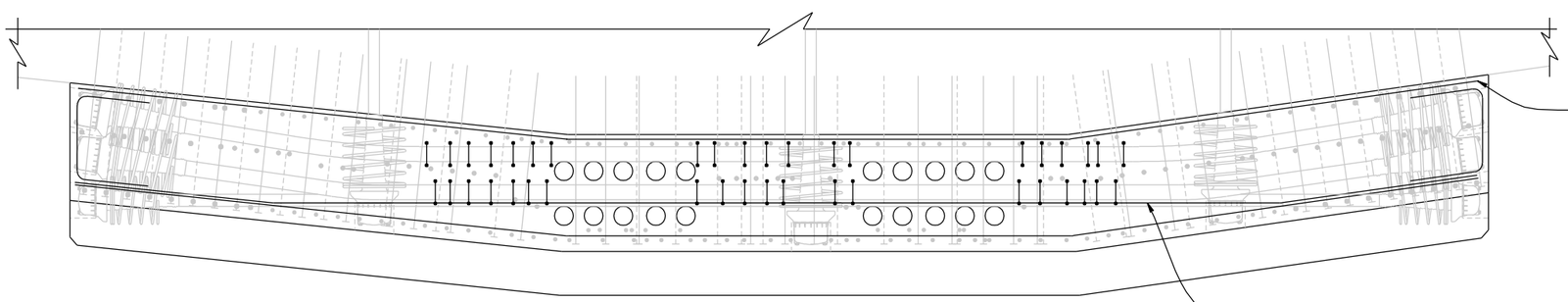


SECTION G-G
1:20

NOTES:

1. See Section F-F for typical wall reinforcement details not shown and/or called out in Sections E-E and G-G.
2. See "S1 & S2 New Design: Construction Details No. 2" sheet for dowel details and locations.

CONTRACT CHANGE ORDER NO. ____
SHEET ____ OF ____

*REQUESTS FOR INFORMATION NOT ADDRESSED IN THIS CCO REMAIN IN FORCE*

ALL DIMENSIONS ARE IN MILLIMETERS UNLESS OTHERWISE SHOWN

A. Akinsanya / W. Long
DESIGN OVERSIGHT
SIGN OFF DATE 07/01/13

| MARK | DATE | DESCRIPTIONS | BY | CH'D | CCO# |
|---|---|---|---|---|---|
| 0 | 07/01/13 | PIER E2 PLANS | AS | MN | 331 |

REVISIONS

| | | | |
|---|---|---|---|
| DESIGN | BY A. Sanjines | CHECKED S. Rodriguez | |
| DETAILS | BY M. Benoit | CHECKED H. Patel | |
| QUANTITIES | BY N. Vo | CHECKED J. Grove | |

**PREPARED FOR THE STATE OF CALIFORNIA DEPARTMENT OF TRANSPORTATION**

M. Nader
PROJECT ENGINEER

BRIDGE NO. 34-0006L/R
KILOMETER POST 13.2/13.9

SAN FRANCISCO OAKLAND BAY BRIDGE
EAST SPAN SEISMIC SAFETY PROJECT
SELF-ANCHORED SUSPENSION BRIDGE
(SUPERSTRUCTURE & TOWER)

# S1 & S2 NEW DESIGN: REINFORCEMENT DETAILS NO.5

Rev. Date: 5-22-13

ORIGINAL SCALE IN MILLIMETERS FOR REDUCED PLANS 0 10 20 30 40 50 60 70 80 90 100

CU 04
EA 0120F1

DISREGARD PRINTS BEARING EARLIER REVISION DATES 07/01/13

REVISION DATES (PRELIMINARY STAGE ONLY)

SHEET 102S18 OF

FILE => I:\bb\04-0120F1\sas\contract plans and cco\cco\cco#331\1-original 07-01-13\dgn\aepir28.dgn

100 % PS&E

DATE PLOTTED => 03 JUL 2013 TIME PLOTTED => 14:38:51

USERNAME => msmith

| DIST. | COUNTY | ROUTE | KILOMETER POST TOTAL PROJECT | SHEET NO. | TOTAL SHEETS |
|---|---|---|---|---|---|
| 04 | SF | 80 | 13.2/13.9 | 519S19 | 1204 |

REGISTERED ENGINEER - CIVIL

07-01-13

PLANS APPROVAL DATE

*The State of California or its officers or agents shall not be responsible for the accuracy or completeness of electronic copies of this plan sheet.*

REGISTERED PROFESSIONAL ENGINEER Marwan N. Nader No. C 054426 Exp. 12/31/13 CIVIL STATE OF CALIFORNIA

T.Y. LIN / MOFFATT & NICHOL
825 BATTERY STREET
SAN FRANCISCO, CA 94111

*Caltrans now has a web site! To get to the web site, go to: http://www.dot.ca.gov*

SECTION A-A
1:20
(Typical wall section)

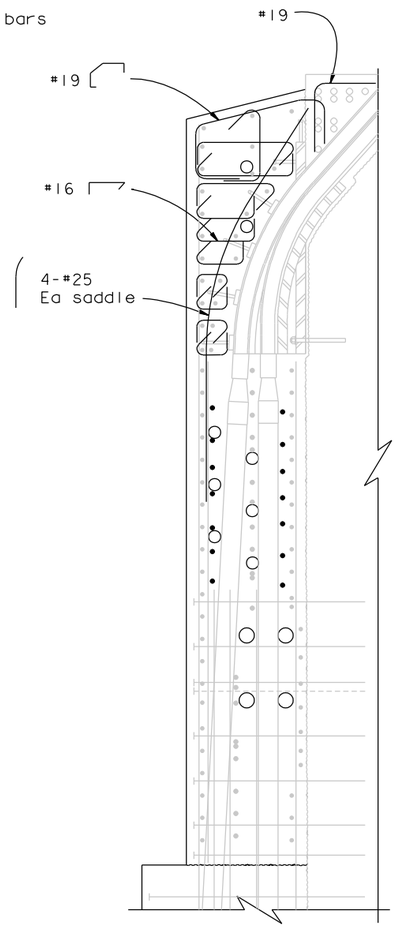


SECTION B-B
1:20
(Wall section through saddle)

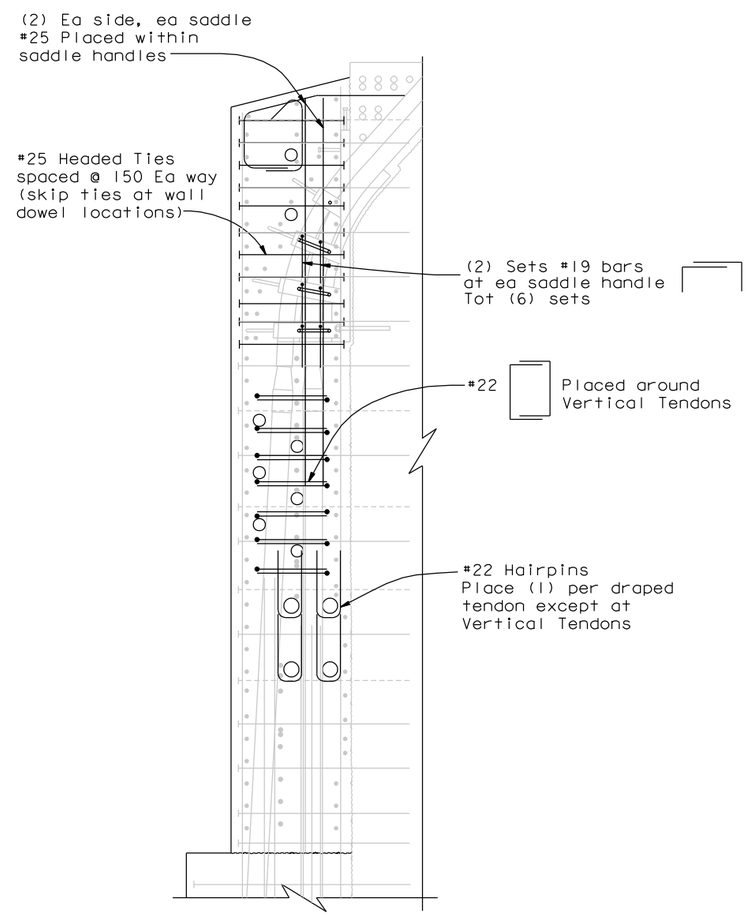


SECTION C-C
1:20
(Wall section between saddles)

NOTES:

1. Non-contact lap splices may be used to continue vertical bars through depth of wall and soffit beam.
2. Bars cut to avoid saddles and anchorages shall be spliced with bars placed to clear. Engineer shall be notified when bars cannot be replaced.
3. See Section A-A for wall reinforcement details not shown and/or called out in Sections B-B and C-C.
4. See "S1 & S2 New Design: Construction Details No.2" sheet for dowel details and locations.

CONTRACT CHANGE ORDER NO. _____
SHEET ____ OF ____

*REQUESTS FOR INFORMATION NOT ADDRESSED IN THIS CCO REMAIN IN FORCE*

ALL DIMENSIONS ARE IN MILLIMETERS UNLESS OTHERWISE SHOWN

A. Akinsanya / W. Long
DESIGN OVERSIGHT
SIGN OFF DATE 07/01/13

| MARK | DATE | DESCRIPTIONS | BY | CH'D | CCO# |
|---|---|---|---|---|---|
| 0 | 07/01/13 | PIER E2 PLANS | AS | MN | 331 |

REVISIONS

| | | | |
|---|---|---|---|
| DESIGN | BY A. Sanjines | CHECKED S. Rodriguez | |
| DETAILS | BY M. Benoit | CHECKED H. Patel | |
| QUANTITIES | BY N. Vo | CHECKED J. Grove | |

**PREPARED FOR THE STATE OF CALIFORNIA DEPARTMENT OF TRANSPORTATION**

M. Nader
PROJECT ENGINEER

BRIDGE NO. 34-0006L/R
KILOMETER POST 13.2/13.9

SAN FRANCISCO OAKLAND BAY BRIDGE
EAST SPAN SEISMIC SAFETY PROJECT
SELF-ANCHORED SUSPENSION BRIDGE
(SUPERSTRUCTURE & TOWER)

**S1 & S2 NEW DESIGN: REINFORCEMENT DETAILS NO.6**

Rev. Date: 5-22-13

ORIGINAL SCALE IN MILLIMETERS FOR REDUCED PLANS 0 10 20 30 40 50 60 70 80 90 100

CU 04
EA 0120F1

DISREGARD PRINTS BEARING EARLIER REVISION DATES 07/01/13

REVISION DATES (PRELIMINARY STAGE ONLY)

SHEET 102S19 OF

FILE => I:\bb\04-0120F1\sas\contract plans and cco\cco\cco#331\1-original 07-01-13\dgn\aepir29.dgn

100 % PS&E

DATE PLOTTED => 03 JUL 2013 TIME PLOTTED => 14:38:20

USERNAME => msmith

| DIST. | COUNTY | ROUTE | KILOMETER POST TOTAL PROJECT | SHEET NO. | TOTAL SHEETS |
|---|---|---|---|---|---|
| 04 | SF | 80 | 13.2/13.9 | 519S20 | 1204 |

REGISTERED ENGINEER - CIVIL

07-01-13

PLANS APPROVAL DATE

REGISTERED PROFESSIONAL ENGINEER Marwan N. Nader No. C 054426 Exp. 12/31/13 CIVIL STATE OF CALIFORNIA

*The State of California or its officers or agents shall not be responsible for the accuracy or completeness of electronic copies of this plan sheet.*

T.Y. LIN / MOFFATT & NICHOL
825 BATTERY STREET
SAN FRANCISCO, CA 94111

*Caltrans now has a web site! To get to the web site, go to: http://www.dot.ca.gov*

SURFACE AND SITE PREPARATION NOTES:

- Survey existing conditions and locate control points.
- Core Through-Cap tendon holes; hole diameter may increase near surface to accommodate trumpet.
- Remove concrete trough at Cap Beam top corner for saddle boxes (existing corner rebar to remain).
- Existing concrete contact surface preparation:
  a. Cut keys into the existing vertical concrete faces.
  b. Expose aggregate on all surfaces by bush hammering to 3/8" (10mm) amplitude (see Bush Hammering Notes).
  c. Pressure wash all prepared concrete surfaces (side walls, excavated corner troughs and soffit).
- Pre-locate tendon layouts. Install drill and bond dowels on side wall and soffit.
- Prepare surface of shear key base plate (removal of existing coatings on contact areas, grinding of corners). Finish shall be class B.
- Drill and tap Shear Key base vertical faces for new saddle wedge plate, and support plate installation. Drill and tap shear key base top face for new saddle tab installation.
- Remove existing A354BD spherical nuts and washers in shear key/saddle contact area. Cut anchor bolt extensions flush with top of shear key base plate. Trimming of adjacent washers may be required. Bolts with trimmed washers shall not be stressed beyond snug tight. Grout anchor bolt voids to seal with Sikadur 35 LV or similar.
- At extracted rod locations, place 3" Dia A354BD replacement dowels, 600 length (Min). Top of replacement dowels shall be flush with the top of the shear key base plate. Grout voids to seal with Sikadur 35 LV or similar.
- Remove concrete at corners of piers from bottom of recess to 1200 below existing cap beam (see concrete removal detail).
- Bearing Rods to be enclosed in the new soffit beam shall be raised as needed in order to provide access for possible future rod tensioning operations. The rods shall be detensioned one at a time. A minimum extension of 2" shall be left below the nuts on the bottom. The rods shall be returned to their design tension load prior to casting the new soffit beam.
- Existing broken anchor rods in the shear key/saddle contact area shall be cut and ground as needed to be flush with the top of the shear key. Prior to the final positioning, rod shall be hydraulically pushed down to close any gap that exists between upper and lower pieces of rod. Grout voids to seal with Sikadur 35 LV or similar.
- Voids at existing broken anchor rods away from the saddle shall be grouted with Sikadur 35 LV or similar. Nuts shall be in full contact with the washer.

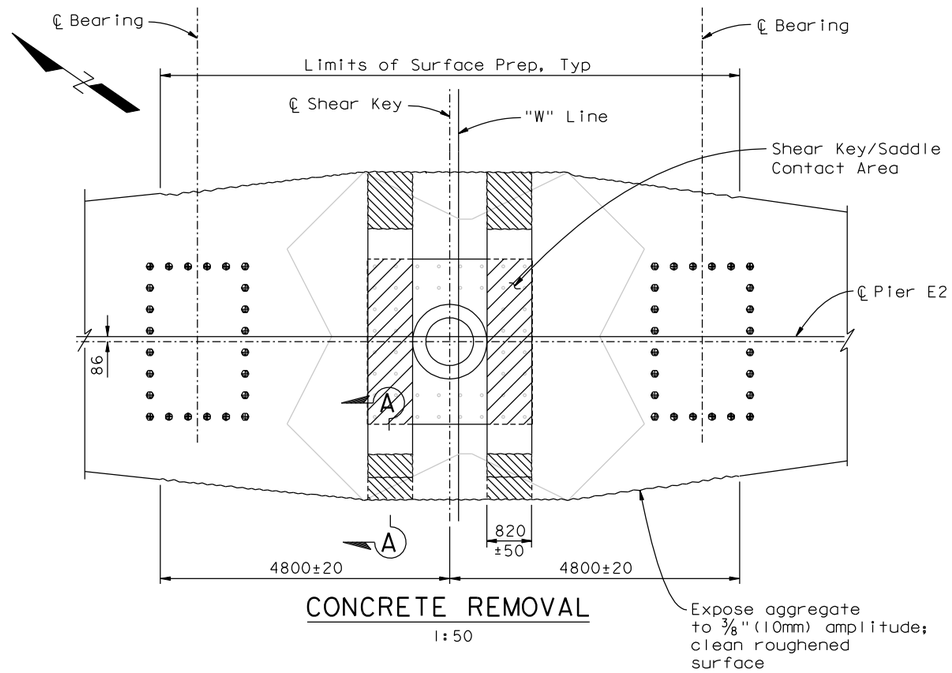


CONCRETE REMOVAL
1:50

BUSH HAMMERING NOTES:

1. Vertical wall surface limit: shall be 150±20mm from top of Cap Beam and continuous to bottom edge of Cap Beam.
2. Horizontal Cap Beam surface limit shall be 4800±20mm from the centerline of Shear Key in either direction for SK-1 and SK-2.

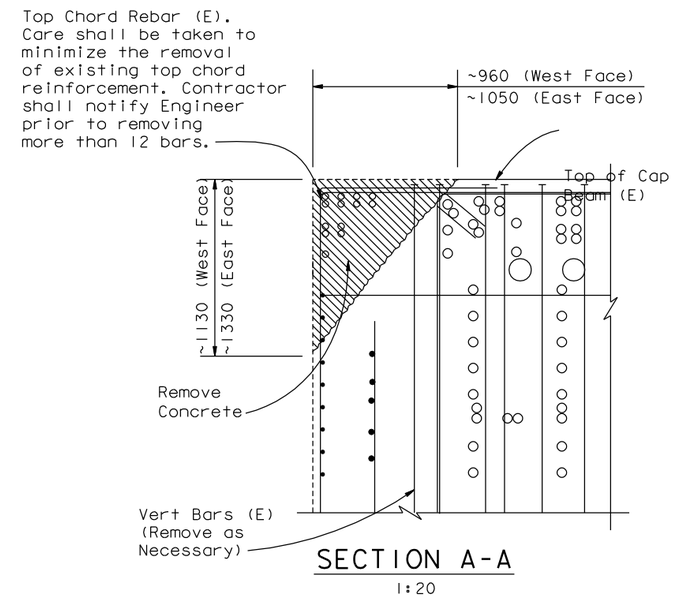


SECTION A-A
1:20

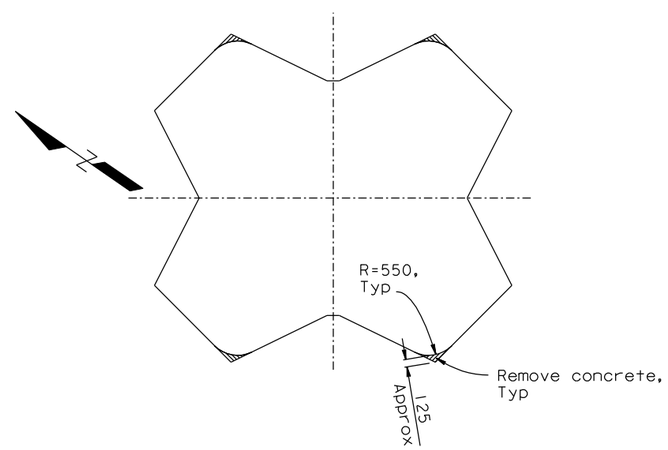


CONCRETE REMOVAL AT PIER
1:50

LEGEND:

- Removed Concrete
- Saddle Contact Area
- Roughened Surface

CONTRACT CHANGE ORDER NO. _____
SHEET ____ OF ____

*REQUESTS FOR INFORMATION NOT ADDRESSED IN THIS CCO REMAIN IN FORCE*

ALL DIMENSIONS ARE IN MILLIMETERS UNLESS OTHERWISE SHOWN

A. Akinsanya / W. Long
DESIGN OVERSIGHT
SIGN OFF DATE 07/01/13

Rev. Date: 5-22-13

| MARK | DATE | DESCRIPTIONS | BY | CH'D | CCO# |
|---|---|---|---|---|---|
| 0 | 07/01/13 | PIER E2 PLANS | AS | MN | 331 |

REVISIONS

| | | | |
|---|---|---|---|
| DESIGN | BY A. Sanjines | CHECKED S. Rodriguez | |
| DETAILS | BY C. Hovell | CHECKED H. Patel | |
| QUANTITIES | BY N. Vo | CHECKED J. Grove | |

PREPARED FOR THE STATE OF CALIFORNIA DEPARTMENT OF TRANSPORTATION

M. Nader
PROJECT ENGINEER

BRIDGE NO. 34-0006L/R
KILOMETER POST 13.2/13.9

SAN FRANCISCO OAKLAND BAY BRIDGE
EAST SPAN SEISMIC SAFETY PROJECT
SELF-ANCHORED SUSPENSION BRIDGE
(SUPERSTRUCTURE & TOWER)

S1 & S2 NEW DESIGN: CONSTRUCTION DETAILS NO. 1

ORIGINAL SCALE IN MILLIMETERS FOR REDUCED PLANS 0 10 20 30 40 50 60 70 80 90 100

CU 04
EA 0120F1

DISREGARD PRINTS BEARING EARLIER REVISION DATES

REVISION DATES (PRELIMINARY STAGE ONLY) 07/01/13

SHEET 102S20 OF

FILE => I:\bb\04-01200I\sas\contract plans and cco\cco\cco#331\1-original 07-01-13\dgn\aepir30.dgn

100 % PS&E

DATE PLOTTED => 03 JUL 2013 TIME PLOTTED => 14:37:57

USERNAME => msmith

| DIST. | COUNTY | ROUTE | KILOMETER POST TOTAL PROJECT | SHEET NO. | TOTAL SHEETS |
|---|---|---|---|---|---|
| 04 | SF | 80 | 13.2/13.9 | 519S21 | 1204 |

REGISTERED ENGINEER - CIVIL

07-01-13

PLANS APPROVAL DATE

REGISTERED PROFESSIONAL ENGINEER Marwan N. Nader No. C 054426 Exp. 12/31/13 CIVIL STATE OF CALIFORNIA

*The State of California or its officers or agents shall not be responsible for the accuracy or completeness of electronic copies of this plan sheet.*

T.Y. LIN / MOFFATT & NICHOL
825 BATTERY STREET
SAN FRANCISCO, CA 94111

*Caltrans now has a web site! To get to the web site, go to: http://www.dot.ca.gov*

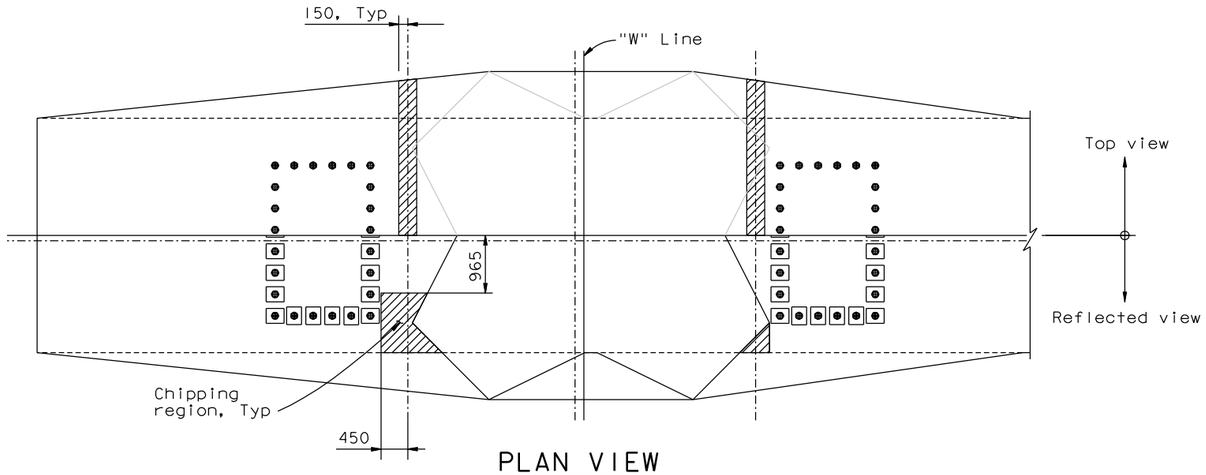


PLAN VIEW
1:50

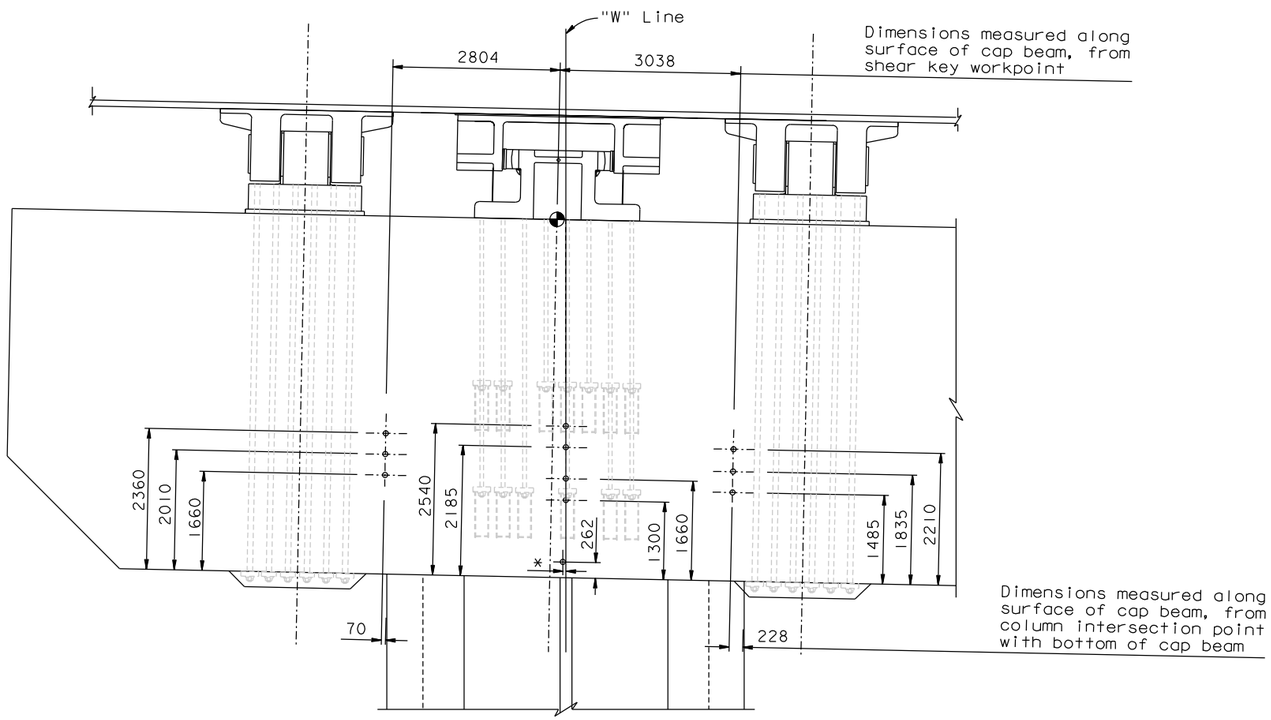


* See Procedural Note 4

ELEVATION
1:50

PROCEDURE FOR ESTABLISHING CORE LOCATIONS:

1. Expose surface of #43 headed bars in hatched region. Work may be performed on top or bottom surface of cap beam.
2. Locate coring ℄ between exposed #43 headed bars.
3. Location shall be approved by the Engineer, prior to coring.
4. Expose horizontal #36 heads in vicinity of lowest centerline coring (Through-Cap Tendon TC5B); locate core between T-heads.

NOTES:

1. Shear Key anchor bolts along ℄ of Pier (in the direct path of coring) shall be detensioned prior to coring.
2. Cores at Pier ℄ are aligned in a true vertical geometry. Outer cores are aligned along 2% slope.
3. Coring operation shall be halted under suspicion of presence of column bars or longitudinal Pier Cap post-tensioning within the core path.
4. "W" Line shown.

CONTRACT CHANGE ORDER NO. _____
SHEET ____ OF ____

*REQUESTS FOR INFORMATION NOT ADDRESSED IN THIS CCO REMAIN IN FORCE*

ALL DIMENSIONS ARE IN MILLIMETERS UNLESS OTHERWISE SHOWN

A. Akinsanya / W. Long
DESIGN OVERSIGHT
SIGN OFF DATE 07/01/13

| MARK | DATE | DESCRIPTIONS | BY | CH'D | CCO# |
|---|---|---|---|---|---|
| 0 | 07/01/13 | PIER E2 PLANS | AS | MN | 331 |

REVISIONS

| | | | |
|---|---|---|---|
| DESIGN | BY A. Sanjines | CHECKED S. Rodriguez | |
| DETAILS | BY C. Hovell | CHECKED H. Patel | |
| QUANTITIES | BY N. Vo | CHECKED J. Grove | |

**PREPARED FOR THE STATE OF CALIFORNIA DEPARTMENT OF TRANSPORTATION**

M. Nader
PROJECT ENGINEER

BRIDGE NO. 34-0006L/R
KILOMETER POST 13.2/13.9

SAN FRANCISCO OAKLAND BAY BRIDGE
EAST SPAN SEISMIC SAFETY PROJECT
SELF-ANCHORED SUSPENSION BRIDGE
(SUPERSTRUCTURE & TOWER)

**S1 & S2 NEW DESIGN: CONSTRUCTION DETAILS NO.2**

Rev. Date: 5-22-13

ORIGINAL SCALE IN MILLIMETERS FOR REDUCED PLANS 0 10 20 30 40 50 60 70 80 90 100

CU 04
EA 0120F1

DISREGARD PRINTS BEARING EARLIER REVISION DATES 07/01/13

REVISION DATES (PRELIMINARY STAGE ONLY)

SHEET 102S21 OF

FILE => I:\bb\04-012001\sas\contract plans and cco\cco\cco#331\1-original 07-01-13\dgn\aepir31.dgn

100 % PS&E

DATE PLOTTED => 03 JUL 2013 TIME PLOTTED => 14:37:18

USERNAME => msmith

| DIST. | COUNTY | ROUTE | KILOMETER POST TOTAL PROJECT | SHEET NO. | TOTAL SHEETS |
|---|---|---|---|---|---|
| 04 | SF | 80 | 13.2/13.9 | 519S22 | 1204 |

REGISTERED ENGINEER - CIVIL

07-01-13

PLANS APPROVAL DATE

REGISTERED PROFESSIONAL ENGINEER Marwan N. Nader No. C 054426 Exp. 12/31/13 CIVIL STATE OF CALIFORNIA

*The State of California or its officers or agents shall not be responsible for the accuracy or completeness of electronic copies of this plan sheet.*

T.Y. LIN / MOFFATT & NICHOL
825 BATTERY STREET
SAN FRANCISCO, CA 94111

*Caltrans now has a web site! To get to the web site, go to: http://www.dot.ca.gov*

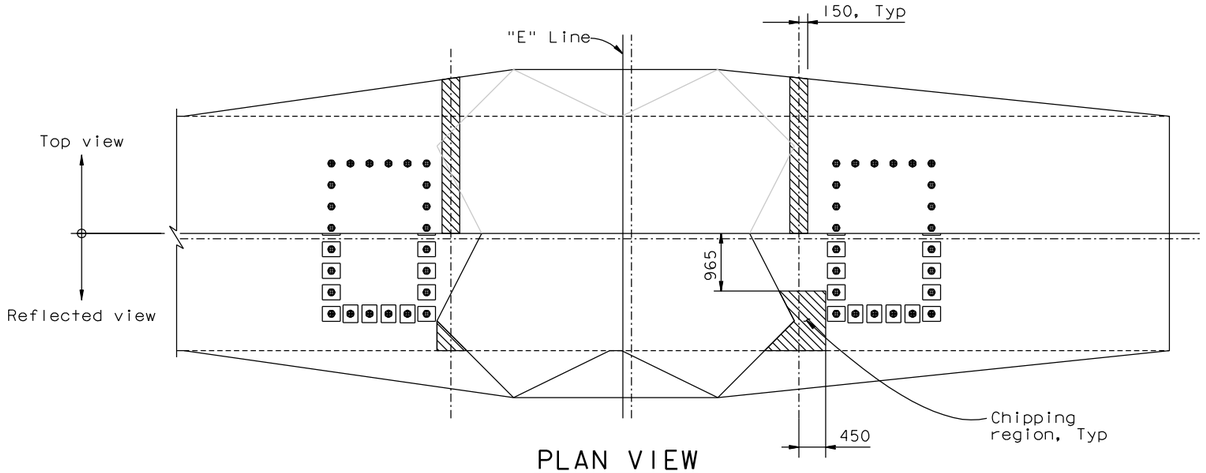


PLAN VIEW
1:50

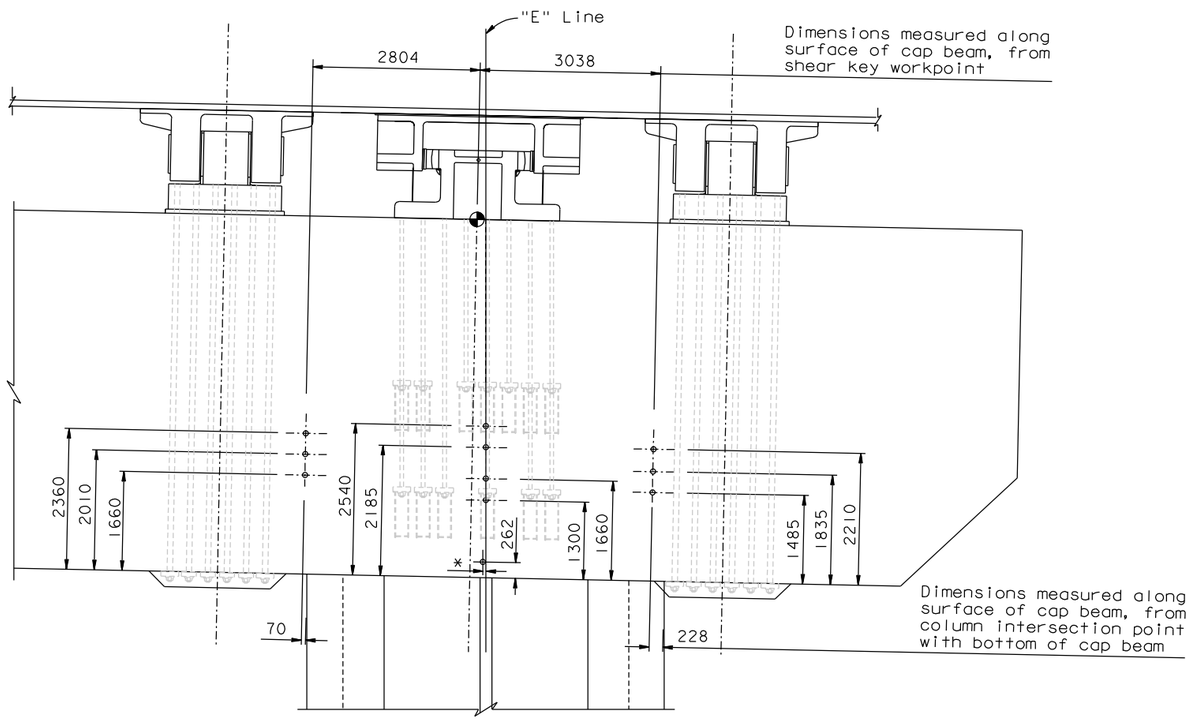


* See Prodedural Note 4

ELEVATION
1:50

PROCEDURE FOR ESTABLISHING CORE LOCATIONS:

1. Expose surface of #43 headed bars in hatched region. Work may be performed on top or bottom surface of cap beam.
2. Locate coring ℄ between exposed #43 headed bars.
3. Location shall be approved by the Engineer, prior to coring.
4. Expose horizontal #36 heads in vicinity of lowest centerline coring (Through-Cap Tendon TC5B); locate core between T-heads.

NOTES:

1. Shear Key anchor bolts along ℄ of Pier (in the direct path of coring) shall be detensioned prior to coring.
2. Cores at Pier ℄ are aligned in a true vertical geometry. Outer cores are aligned along 2% slope.
3. Coring operation shall be halted under suspicion of presence of column bars or longitudinal Pier Cap post-tensioning within the core path.
4. "E" Line shown.

CONTRACT CHANGE ORDER NO. _____
SHEET ____ OF ____

*REQUESTS FOR INFORMATION NOT ADDRESSED IN THIS CCO REMAIN IN FORCE*

ALL DIMENSIONS ARE IN MILLIMETERS UNLESS OTHERWISE SHOWN

A. Akinsanya / W. Long
DESIGN OVERSIGHT
SIGN OFF DATE 07/01/13

| MARK | DATE | DESCRIPTIONS | BY | CH'D | CCO# |
|---|---|---|---|---|---|
| 0 | 07/01/13 | PIER E2 PLANS | AS | MN | 331 |

REVISIONS

| | | | |
|---|---|---|---|
| DESIGN | BY A. Sanjines | CHECKED S. Rodriguez | |
| DETAILS | BY C. Hovell | CHECKED H. Patel | |
| QUANTITIES | BY N. Vo | CHECKED J. Grove | |

**PREPARED FOR THE STATE OF CALIFORNIA DEPARTMENT OF TRANSPORTATION**

M. Nader
PROJECT ENGINEER

BRIDGE NO. 34-0006L/R
KILOMETER POST 13.2/13.9

SAN FRANCISCO OAKLAND BAY BRIDGE
EAST SPAN SEISMIC SAFETY PROJECT
SELF-ANCHORED SUSPENSION BRIDGE
(SUPERSTRUCTURE & TOWER)

**S1 & S2 NEW DESIGN: CONSTRUCTION DETAILS NO. 3**

Rev. Date: 5-22-13

ORIGINAL SCALE IN MILLIMETERS FOR REDUCED PLANS 0 10 20 30 40 50 60 70 80 90 100

CU 04
EA 0120F1

DISREGARD PRINTS BEARING EARLIER REVISION DATES 07/01/13

REVISION DATES (PRELIMINARY STAGE ONLY)

SHEET 102S22 OF

FILE => I:\bb\04-012001\sas\contract plans and cco\cco\cco#331\1-original 07-01-13\dgn\aepir32.dgn

100 % PS&E

USERNAME => msmith DATE PLOTTED => 03 JUL 2013 TIME PLOTTED => 14:36:35

| DIST. | COUNTY | ROUTE | KILOMETER POST TOTAL PROJECT | SHEET NO. | TOTAL SHEETS |
|---|---|---|---|---|---|
| 04 | SF | 80 | 13.2/13.9 | 519S23 | 1204 |

REGISTERED ENGINEER - CIVIL

07-01-13

PLANS APPROVAL DATE

REGISTERED PROFESSIONAL ENGINEER Marwan N. Nader No. C 054426 Exp. 12/31/13 CIVIL STATE OF CALIFORNIA

*The State of California or its officers or agents shall not be responsible for the accuracy or completeness of electronic copies of this plan sheet.*

T.Y. LIN / MOFFATT & NICHOL
825 BATTERY STREET
SAN FRANCISCO, CA 94111

*Caltrans now has a web site! To get to the web site, go to: http://www.dot.ca.gov*

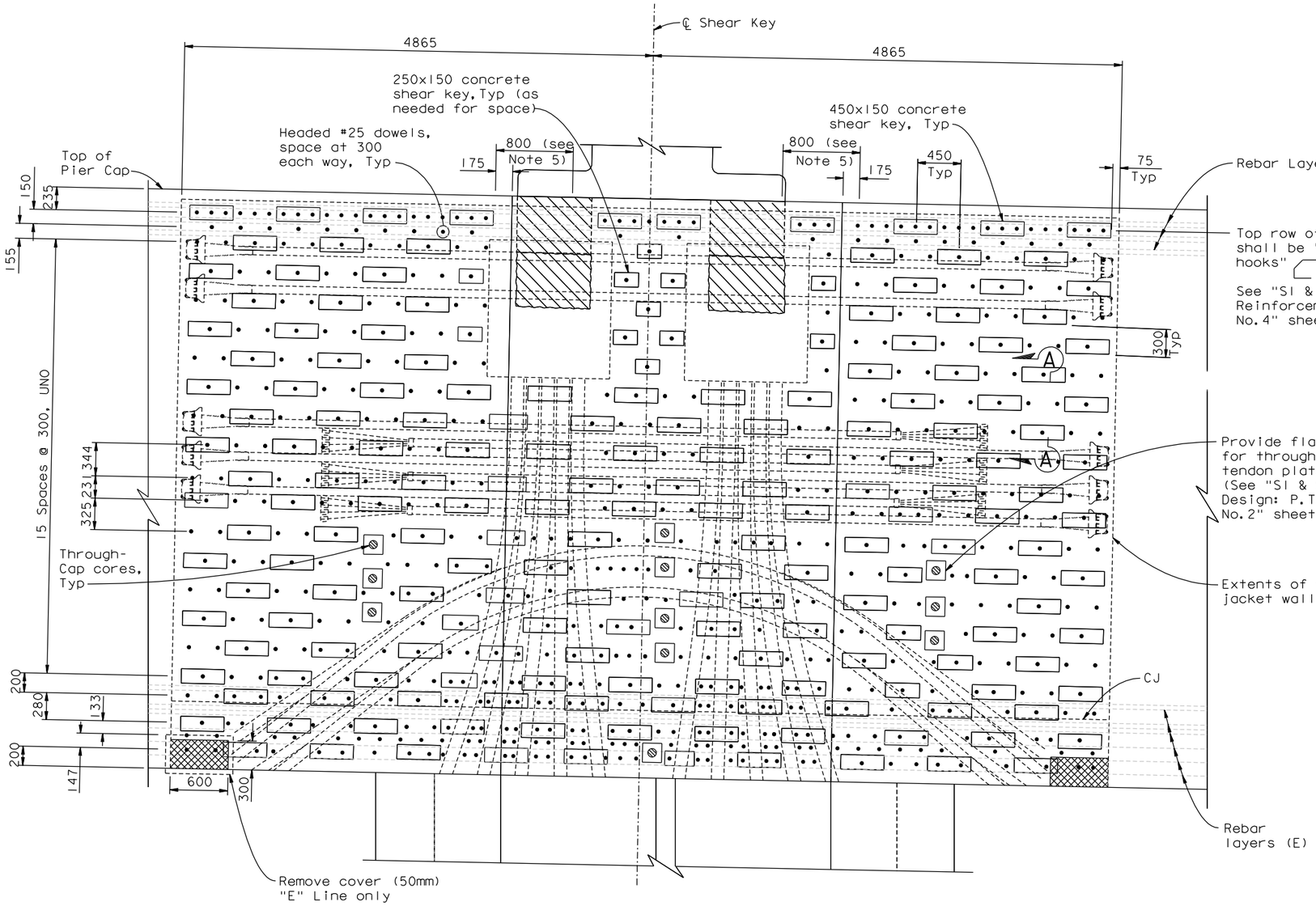


## SURFACE PREPARATION AND APPROXIMATE KEY LOCATIONS

1:25
(West face shown, East face similar)

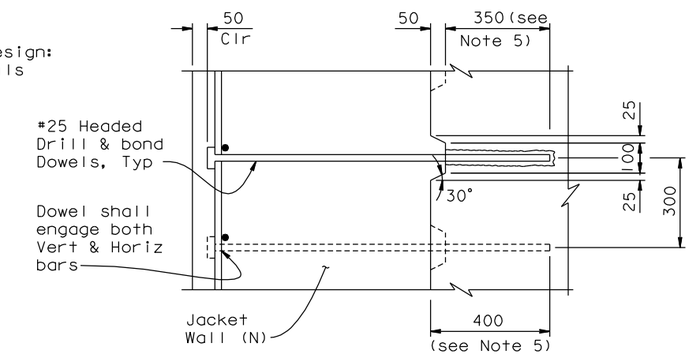


## SECTION A-A

1:10

LEGEND:

- Concrete Shear Key
- Typical Dowel, UNO
- Cored Hole with Cover Plate
- Concrete cover removed (50mm)

NOTES:

1. Dimensions are 450x150 typical, spaced as shown, staggered.
2. Concrete Shear Key geometry must be adjusted to accommodate lower saddle and through-cap tendons.
3. Upper level keys and lower level keys shall be adjusted to accommodate dowel locations located between existing Cap Beam main top and bottom bar reinforcement.
4. Two #25 dowels shall be placed between adjacent tendon ducts from cap beam soffit to one meter above soffit, at spacings shown.
5. In indicated areas, column reinforcement exists within 400 mm of surface. Drilling shall be stopped upon contact with column hoops or verticals. If embedment of 330 mm is attainable in this area, no change is required. Otherwise, adjust drilling location to clear bar.

CONTRACT CHANGE ORDER NO. _____
SHEET ____ OF ____

*REQUESTS FOR INFORMATION NOT ADDRESSED IN THIS CCO REMAIN IN FORCE*

ALL DIMENSIONS ARE IN MILLIMETERS UNLESS OTHERWISE SHOWN

A. Akinsanya / W. Long
DESIGN OVERSIGHT
SIGN OFF DATE 07/01/13

| MARK | DATE | DESCRIPTIONS | BY | CH'D | CCO# |
|---|---|---|---|---|---|
| 0 | 07/01/13 | PIER E2 PLANS | AS | MN | 331 |

REVISIONS

| | | | |
|---|---|---|---|
| DESIGN | BY A. Sanjines | CHECKED S. Rodriguez | |
| DETAILS | BY C. Hovell | CHECKED H. Patel | |
| QUANTITIES | BY N. Vo | CHECKED J. Grove | |

**PREPARED FOR THE STATE OF CALIFORNIA DEPARTMENT OF TRANSPORTATION**

M. Nader
PROJECT ENGINEER

BRIDGE NO. 34-0006L/R
KILOMETER POST 13.2/13.9

SAN FRANCISCO OAKLAND BAY BRIDGE
EAST SPAN SEISMIC SAFETY PROJECT
SELF-ANCHORED SUSPENSION BRIDGE
(SUPERSTRUCTURE & TOWER)

# S1 & S2 NEW DESIGN: CONSTRUCTION DETAILS NO. 4

Rev. Date: 5-22-13

ORIGINAL SCALE IN MILLIMETERS FOR REDUCED PLANS 0 10 20 30 40 50 60 70 80 90 100

CU 04
EA 0120F1

DISREGARD PRINTS BEARING EARLIER REVISION DATES

REVISION DATES (PRELIMINARY STAGE ONLY) 07/01/13

SHEET 102S23 OF

FILE => I:\bb\04-012001\sas\contract plans and cco\cco\cco#331\1-original 07-01-13\dgn\aepir33.dgn

USERNAME => msmith DATE PLOTTED => 03 JUL 2013 TIME PLOTTED => 14:36:01

100% PS&E

| DIST. | COUNTY | ROUTE | KILOMETER POST TOTAL PROJECT | SHEET NO. | TOTAL SHEETS |
|---|---|---|---|---|---|
| 04 | SF | 80 | 13.2/13.9 | 519S24 | 1204 |

REGISTERED ENGINEER - CIVIL

07-01-13

PLANS APPROVAL DATE

REGISTERED PROFESSIONAL ENGINEER Marwan N. Nader No. C 054426 Exp. 12/31/13 CIVIL STATE OF CALIFORNIA

*The State of California or its officers or agents shall not be responsible for the accuracy or completeness of electronic copies of this plan sheet.*

T.Y. LIN / MOFFATT & NICHOL
825 BATTERY STREET
SAN FRANCISCO, CA 94111

*Caltrans now has a web site! To get to the web site, go to: http://www.dot.ca.gov*

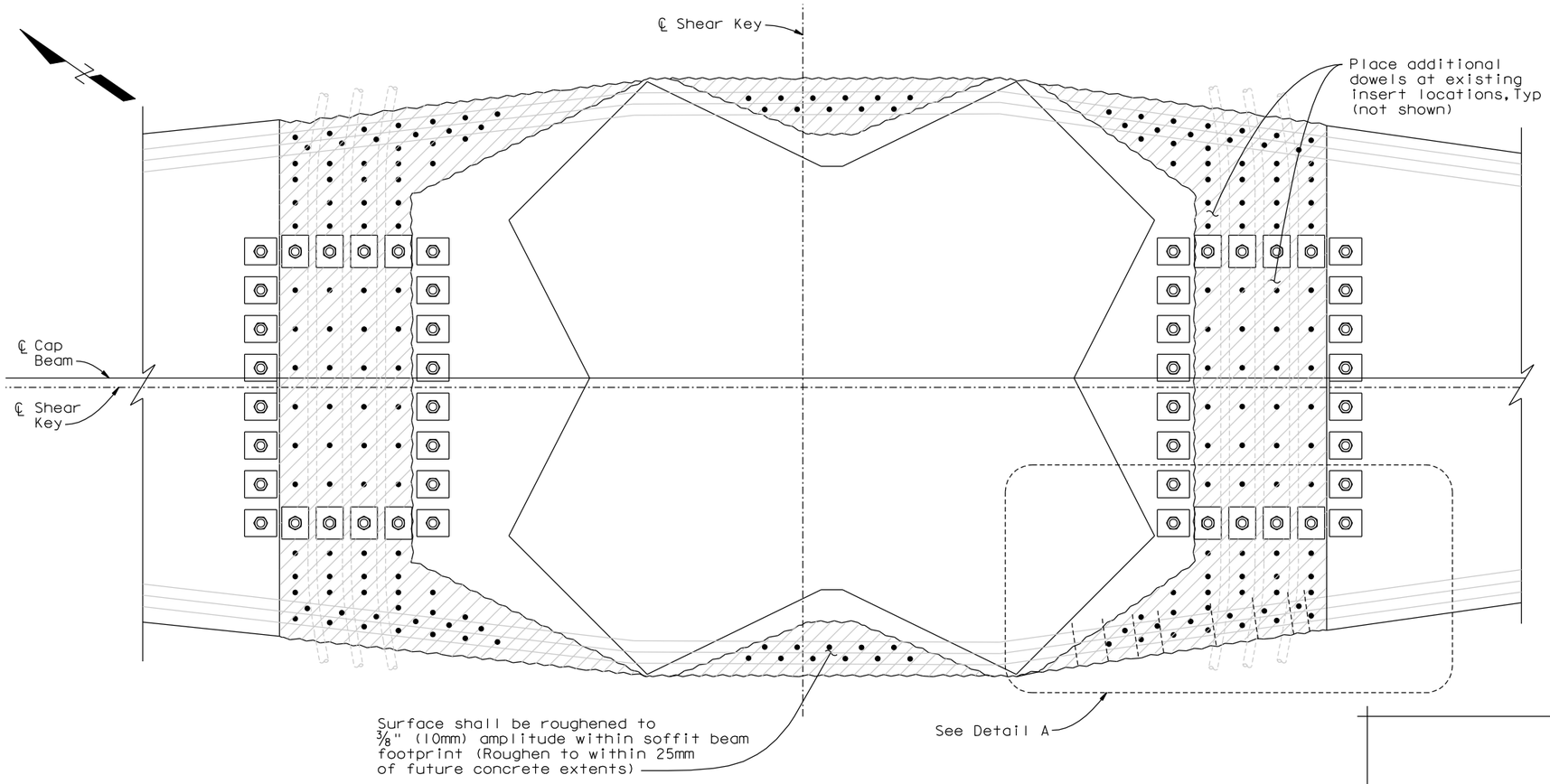


## REFLECTED PLAN

1:25

LEGEND:

- Roughened Surface
- • Typical Dowel

NOTES:

1. Dowels shall be embedded 350mm.
2. Adjust dowel locations near edge of cap beam to clear #43 reinforcement within cap beam and future dowels in cap beam wall.
3. Contractor shall mark locations of transverse tendons on soffit prior to drilling. Dowel locations may be adjusted to fit as built conditions.

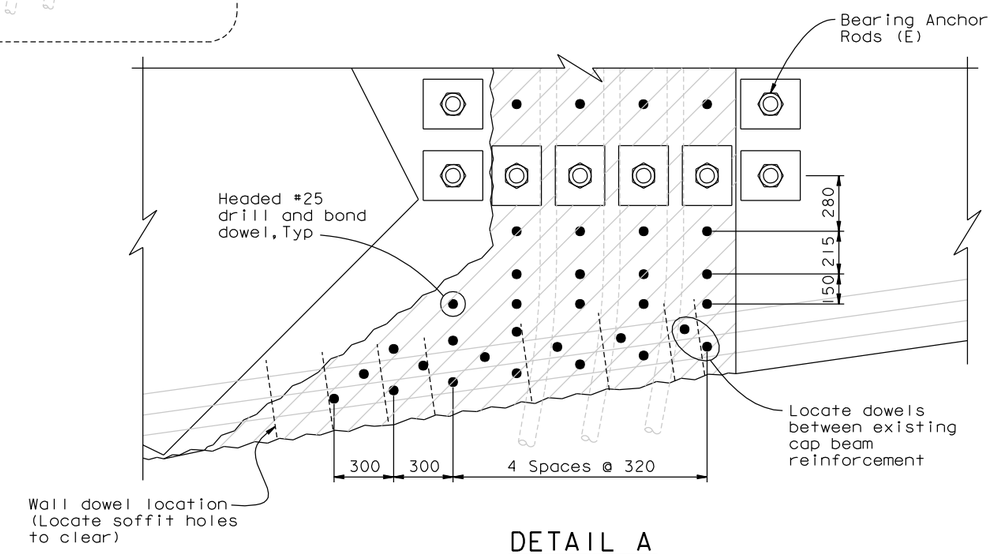


## DETAIL A

1:15

(Other corners similar)

CONTRACT CHANGE ORDER NO. _____
SHEET ____ OF ____

*REQUESTS FOR INFORMATION NOT ADDRESSED IN THIS CCO REMAIN IN FORCE*

ALL DIMENSIONS ARE IN MILLIMETERS UNLESS OTHERWISE SHOWN

A. Akinsanya / W. Long
DESIGN OVERSIGHT
SIGN OFF DATE 07/01/13

| MARK | DATE | DESCRIPTIONS | BY | CH'D | CCO# |
|---|---|---|---|---|---|
| 0 | 07/01/13 | PIER E2 PLANS | AS | MN | 331 |

REVISIONS

| | | | |
|---|---|---|---|
| DESIGN | BY A. Sanjines | CHECKED S. Rodriguez | |
| DETAILS | BY C. Hovell | CHECKED H. Patel | |
| QUANTITIES | BY N. Vo | CHECKED J. Grove | |

**PREPARED FOR THE STATE OF CALIFORNIA DEPARTMENT OF TRANSPORTATION**

M. Nader
PROJECT ENGINEER

BRIDGE NO. 34-0006L/R
KILOMETER POST 13.2/13.9

SAN FRANCISCO OAKLAND BAY BRIDGE
EAST SPAN SEISMIC SAFETY PROJECT
SELF-ANCHORED SUSPENSION BRIDGE
(SUPERSTRUCTURE & TOWER)

**S1 & S2 NEW DESIGN: CONSTRUCTION DETAILS NO.5**

Rev. Date: 5-22-13

ORIGINAL SCALE IN MILLIMETERS FOR REDUCED PLANS 0 10 20 30 40 50 60 70 80 90 100

CU 04
EA 0120F1

DISREGARD PRINTS BEARING EARLIER REVISION DATES 07/01/13

REVISION DATES (PRELIMINARY STAGE ONLY)

SHEET 102S24 OF

FILE => I:\bb\04-012001\sas\contract plans and cco\cco\cco#331\1-original 07-01-13\dgn\aepir34.dgn

100 % PS&E

USERNAME => msmith DATE PLOTTED => 03 JUL 2013 TIME PLOTTED => 14:35:34

| DIST. | COUNTY | ROUTE | KILOMETER POST TOTAL PROJECT | SHEET NO. | TOTAL SHEETS |
|---|---|---|---|---|---|
| 04 | SF | 80 | 13.2/13.9 | 519S25 | 1204 |

Caltrans Metric

REGISTERED ENGINEER - CIVIL

07-01-13

PLANS APPROVAL DATE

*The State of California or its officers or agents shall not be responsible for the accuracy or completeness of electronic copies of this plan sheet.*

REGISTERED PROFESSIONAL ENGINEER Marwan N. Nader No. C 054426 Exp. 12/31/13 CIVIL STATE OF CALIFORNIA

T.Y. LIN / MOFFATT & NICHOL
825 BATTERY STREET
SAN FRANCISCO, CA 94111

*Caltrans now has a web site! To get to the web site, go to: http://www.dot.ca.gov*

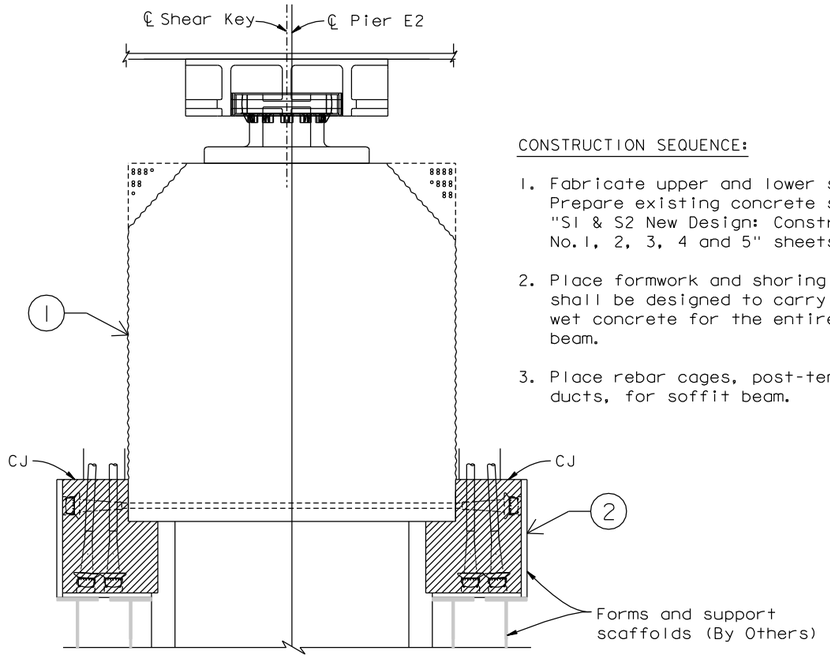


CONSTRUCTION SEQUENCE:

1. Fabricate upper and lower saddles (off-site); Prepare existing concrete surfaces per "S1 & S2 New Design: Construction Details No.1, 2, 3, 4 and 5" sheets.

2. Place formwork and shoring supports. Shoring shall be designed to carry the full dead load of wet concrete for the entire jacket wall and soffit beam.

3. Place rebar cages, post-tensioning anchors, and ducts, for soffit beam.

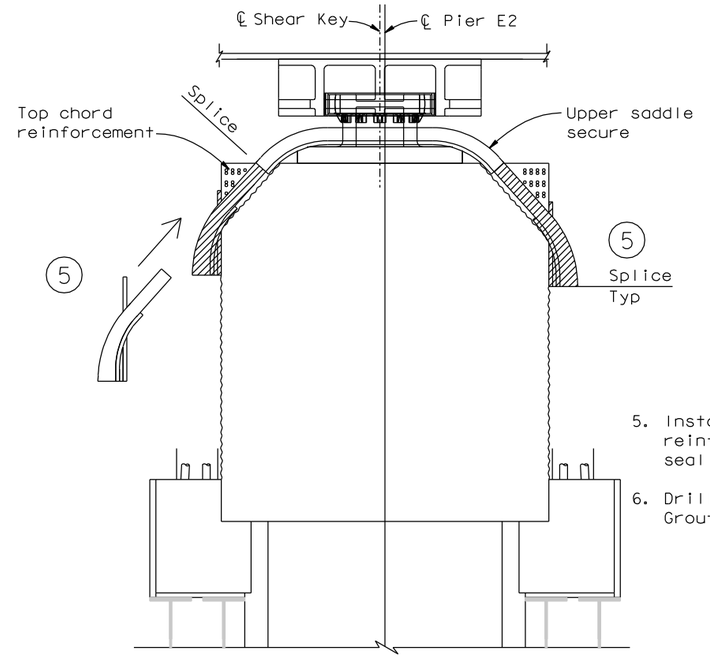


5. Install lower saddles by sliding assembly below existing reinforcement until splice is engaged. Tighten and fully seal splice joint.

6. Drill and engage expansion anchors for lower saddles. Grout saddle assemblies into place.

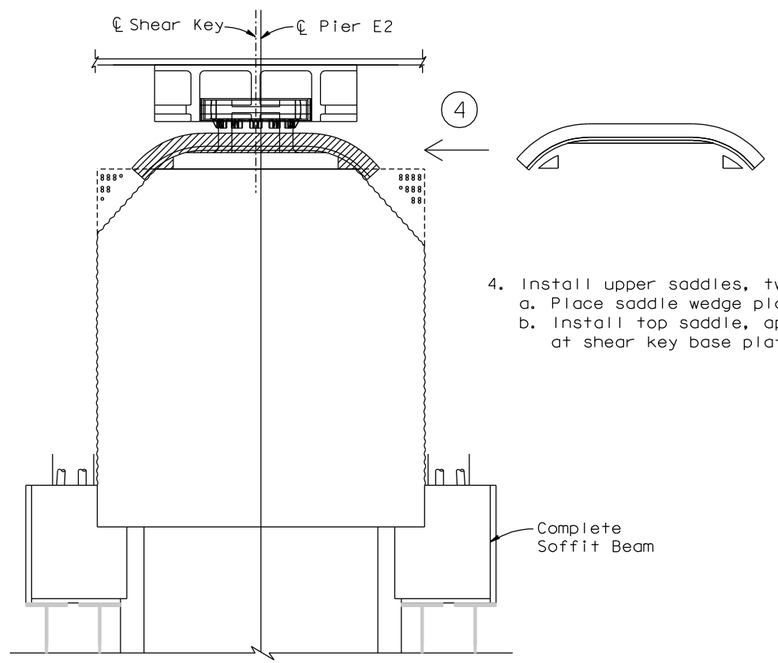


4. Install upper saddles, two per shear key:
   a. Place saddle wedge plates and bolt into place.
   b. Install top saddle, apply Sikadur 35 LV (or similar) at shear key base plate corner as needed (< 5mm).

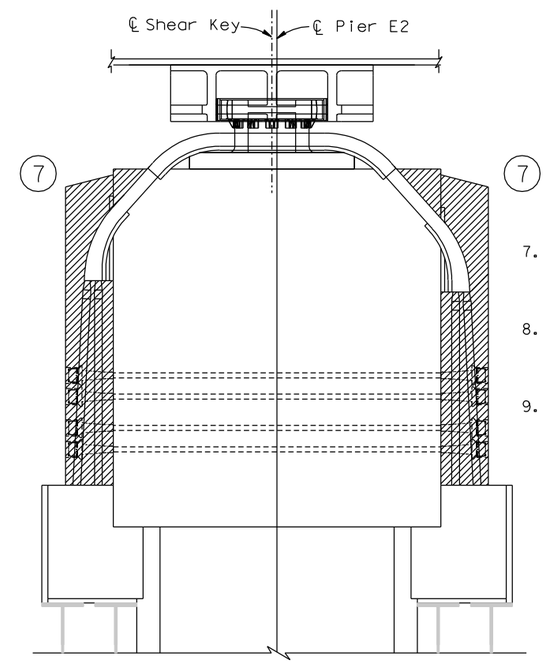


7. Place rebar cages, post-tensioning ducts, and anchors for concrete jacket wall. Form and cast concrete. Remove all side forms.

8. Install, stress, and grout all post-tensioned tendons per the post-tensioning sequence on "S1 & S2 New Design: Construction Details No.7" sheet.

9. After completion of post tensioning operations, inspect boundaries between new and old concrete. Observed cracking and/or separations shall be filled with Sikadur 35 LV or similar, upon approval by the Engineer.

CONTRACT CHANGE ORDER NO. _____
SHEET ____ OF ____

*REQUESTS FOR INFORMATION NOT ADDRESSED IN THIS CCO REMAIN IN FORCE*

ALL DIMENSIONS ARE IN MILLIMETERS UNLESS OTHERWISE SHOWN

100 % PS&E

A. Akinsanya / W. Long
DESIGN OVERSIGHT
SIGN OFF DATE 07/01/13

| MARK | DATE | DESCRIPTIONS | BY | CH'D | CCO# |
|---|---|---|---|---|---|
| 0 | 07/01/13 | PIER E2 PLANS | AS | MN | 331 |

REVISIONS

| | | | |
|---|---|---|---|
| DESIGN | BY A. Sanjines | CHECKED | S. Rodriguez |
| DETAILS | BY C. Hovell | CHECKED | H. Patel |
| QUANTITIES | BY N. Vo | CHECKED | J. Grove |

**PREPARED FOR THE STATE OF CALIFORNIA DEPARTMENT OF TRANSPORTATION**

M. Nader
PROJECT ENGINEER

BRIDGE NO. 34-0006L/R
KILOMETER POST 13.2/13.9

SAN FRANCISCO OAKLAND BAY BRIDGE
EAST SPAN SEISMIC SAFETY PROJECT
SELF-ANCHORED SUSPENSION BRIDGE
(SUPERSTRUCTURE & TOWER)

**S1 & S2 NEW DESIGN: CONSTRUCTION DETAILS NO.6**

Rev. Date: 5-22-13

ORIGINAL SCALE IN MILLIMETERS FOR REDUCED PLANS 0 10 20 30 40 50 60 70 80 90 100

CU 04
EA 0120F1

DISREGARD PRINTS BEARING EARLIER REVISION DATES 07/01/13

REVISION DATES (PRELIMINARY STAGE ONLY)

SHEET 102S25 OF

FILE => I:\bb\04-012001\sas\contract plans and cco\cco\cco#331\1-original 07-01-13\dgn\aepir35.dgn

USERNAME => msmith DATE PLOTTED => 03 JUL 2013 TIME PLOTTED => 14:34:23

| DIST. | COUNTY | ROUTE | KILOMETER POST TOTAL PROJECT | SHEET NO. | TOTAL SHEETS |
|---|---|---|---|---|---|
| 04 | SF | 80 | 13.2/13.9 | 519S26 | 1204 |

REGISTERED ENGINEER - CIVIL

07-01-13

PLANS APPROVAL DATE

REGISTERED PROFESSIONAL ENGINEER Marwan N. Nader No. C 054426 Exp. 12/31/13 CIVIL STATE OF CALIFORNIA

*The State of California or its officers or agents shall not be responsible for the accuracy or completeness of electronic copies of this plan sheet.*

T.Y. LIN / MOFFATT & NICHOL
825 BATTERY STREET
SAN FRANCISCO, CA 94111

*Caltrans now has a web site! To get to the web site, go to: http://www.dot.ca.gov*

| Global Stressing Order (See Note 1) | Tendon Group | Strands Per Tendon | Jacking Force (MN) |
|---|---|---|---|
| 1 & 2 | Bottom Longitudinal | 12 | 2.34 |
| | Transverse | 12 | 2.34 |
| 3 | Through-Cap* | 19, 24 | 3.71, 4.69 |
| 4 | Top Longitudinal | 12 | 2.34 |
| 5 | Draped Group 1 | 19 | 3.71 |
| 6 | Vertical Layer A | 26 | 5.08 |
| 7 | Draped Group 2 | 19 | 3.71 |
| 8 | Vertical Layer B | 26 | 5.08 |

*24 Strand tendon is indicated by an asterisk.

(1) (2) Transverse & Bottom Longitudinal Tendons

a. Sufficient tails shall be left on all Transverse Tendons to allow for jacking from either end.
b. Alternate stressing end on tendons in the same transverse beam.

| Stressing Order | Shear Key S1 | Shear Key S2 |
|---|---|---|
| 1 | B1T1 | B2T1 |
| 2 | B1T2 | B2T2 |
| 3 | B1T4 | B2T4 |
| 4 | B3T1 | B4T1 |
| 5 | B3T2 | B4T2 |
| 6 | B3T4 | B4T4 |

c. Stressing of the Bottom Longitudinal Tendons may begin on either face of the cap beam.
d. Bottom Longitudinal Tendons may be stressed from either end.

| Stressing Order | Tendon |
|---|---|
| 1 | BL2 |
| 2 | BL1 |

| Stressing Order | Shear Key S1 | Shear Key S2 |
|---|---|---|
| 7 | B1T3 | B2T3 |
| 8 | B1T5 | B2T5 |
| 9 | B1T6 | B2T6 |
| 10 | B3T3 | B4T3 |
| 11 | B3T5 | B4T5 |
| 12 | B3T6 | B4T6 |

(3) Through-Cap Tendons

| Stressing Order | Tendon |
|---|---|
| 1 | TC1B |
| 2 | TC2B |
| 3 | TC3B |
| 4 | TC4B |
| 5 | TC5B* |
| 6 | TC1A |
| 7 | TC2A |
| 8 | TC3A |
| 9 | TC1C |
| 10 | TC2C |
| 11 | TC3C |

(4) Top Longitudinal Tendons

a. Top Longitudinal Tendons on either face of the cap beam may be stressed first.
b. Alternate stressing end for Top Longitudinal Tendons on the same side of the Cap Beam.

| Stressing Order | Tendon |
|---|---|
| 1 | TL4 |
| 2 | TL3 |
| 3 | TL6 |
| 4 | TL5 |
| 5 | TL2 |
| 6 | TL1 |
| 7 | TL7 |
| 8 | TL8 |

c. Prior to continuing to Step 5 in the stressing sequence:
   1. Bottom Longitundinal Tendons, Transverse Tendons, and Top Longitudinal Tendons TL1 though TL6 shall be grouted. Remaining Top Longitudinal Tendons may be grouted.
   2. Bottom Longitudinal Tendons and Through-Cap Tendons TC2B & TC3B shall reach stessing strength.
   3. Transverse Tendons, remaining Through-Cap Tendons, and Top Longitudinal Tendon TL6 shall reach initial set.

(5) Draped Tendons - Group 1

a. Stressing of the Draped Tendons may begin on either face of the cap beam.

| Stressing Order | Tendon | Stressing End |
|---|---|---|
| 1 | DL4 | North |
| 2 | DL2 | South |

b. Prior to continuing to Step 6 in the stressing sequence:
   1. All Top Longitudinal Tendons shall be grouted and shall reach initial set.
   2. Transverse Tendons and all Through-Cap Tendons shall reach stressing strength.

(6) Vertical Tendons - Layer A

a. Vertical Tendons shall be stressed from both ends simultaneously.

| Stressing Order | Tendon | Side of Shear Key |
|---|---|---|
| 1 | A2** | North |
| 2 | A2** | South |
| 3 | A4** | South |
| 4 | A4** | North |
| 5 | A3 | North |
| 6 | A3 | South |
| 7 | A1 | South |
| 8 | A1 | North |
| 9 | A5 | North |
| 10 | A5 | South |
| 11 | A2** | South |
| 12 | A2** | North |
| 13 | A4** | North |
| 14 | A4** | South |

** Tendons A2, A4 shall be initially stressed to 50% of the given jacking force. Stressing of Layer A tendons shall conclude by stressing tendons A2, A4 to 100% of the given jacking force.

(7) Draped Tendons - Group 2

a. Stressing of the Draped Tendons may begin on either face of the cap beam.

| Stressing Order | Tendon | Stressing End |
|---|---|---|
| 3 | DL3 | South |
| 4 | DL1 | North |

b. Prior to continuing to Step 8 in the stressing sequence:
   1. All Draped Tendons shall be grouted and shall reach initial set.
   2. Layer A Vertical Tendons shall be grouted and shall reach stressing strength.

(8) Vertical Tendons - Layer B

a. Vertical Tendons shall be stressed from both ends simultaneously.

| Stressing Order | Tendon | Side of Shear Key |
|---|---|---|
| 15 | B2** | North |
| 16 | B2** | South |
| 17 | B4** | South |
| 18 | B4** | North |
| 19 | B3 | North |
| 20 | B3 | South |
| 21 | B1 | South |
| 22 | B1 | North |
| 23 | B5 | North |
| 24 | B5 | South |
| 25 | B2** | South |
| 26 | B2** | North |
| 27 | B4** | North |
| 28 | B4** | South |

** Tendons B2, B4 shall be initially stressed to 50% of the given jacking force. Stressing of Layer B tendons shall conclude by stressing tendons B2, B4 to 100% of the given jacking force.

b. Layer B Vertical Tendons shall be grouted to complete the stressing operations.

NOTES:

1. Vertical support scaffolding shall be in place through the end of Step 3 of the post tensioning sequence.
2. Stressing sequence at S1 shown; S2 similar.
3. "Stressing strength" is defined as a compressive strength of grout exceeding 21 MPa. "Initial set" is defined as a compressive strength of grout exceeding 14 MPa.

CONTRACT CHANGE ORDER NO. _____
SHEET ____ OF ____

*REQUESTS FOR INFORMATION NOT ADDRESSED IN THIS CCO REMAIN IN FORCE*

ALL DIMENSIONS ARE IN MILLIMETERS UNLESS OTHERWISE SHOWN

A. Akinsanya / W. Long
DESIGN OVERSIGHT
SIGN OFF DATE 07/01/13

| MARK | DATE | DESCRIPTIONS | BY | CH'D | CCO# |
|---|---|---|---|---|---|
| 0 | 07/01/13 | PIER E2 PLANS | AS | MN | 331 |

REVISIONS

| | | | |
|---|---|---|---|
| DESIGN | BY A. Sanjines | CHECKED S. Rodriguez | |
| DETAILS | BY C. Hovell | CHECKED H. Patel | |
| QUANTITIES | BY N. Vo | CHECKED J. Grove | |

PREPARED FOR THE STATE OF CALIFORNIA DEPARTMENT OF TRANSPORTATION

M. Nader
PROJECT ENGINEER

BRIDGE NO. 34-0006L/R
KILOMETER POST 13.2/13.9

SAN FRANCISCO OAKLAND BAY BRIDGE
EAST SPAN SEISMIC SAFETY PROJECT
SELF-ANCHORED SUSPENSION BRIDGE
(SUPERSTRUCTURE & TOWER)

# S1 & S2 NEW DESIGN: CONSTRUCTION DETAILS NO. 7

Rev. Date: 5-22-13

ORIGINAL SCALE IN MILLIMETERS FOR REDUCED PLANS 0 10 20 30 40 50 60 70 80 90 100

CU 04
EA 0120F1

DISREGARD PRINTS BEARING EARLIER REVISION DATES 07/01/13

REVISION DATES (PRELIMINARY STAGE ONLY)

SHEET 102S26 OF

FILE => I:\bb\04-012001\sas\contract plans and cco\cco\cco*331\1-original 07-01-13\dgn\aepir36.dgn

100% PS&E

DATE PLOTTED => 03 JUL 2013 TIME PLOTTED => 14:33:30

USERNAME => msmith

| DIST. | COUNTY | ROUTE | KILOMETER POST TOTAL PROJECT | SHEET NO. | TOTAL SHEETS |
|---|---|---|---|---|---|
| 04 | SF | 80 | 13.2/13.9 | 883S1 | 1204 |

Caltrans Metric

REGISTERED ENGINEER - CIVIL

07-03-13

PLANS APPROVAL DATE

REGISTERED PROFESSIONAL ENGINEER Marwan N. Nader No. C 054426 Exp. 12/31/13 CIVIL STATE OF CALIFORNIA

The State of California or its officers or agents shall not be responsible for the accuracy or completeness of electronic copies of this plan sheet.

T.Y. LIN / MOFFATT & NICHOL
825 BATTERY STREET
SAN FRANCISCO, CA 94111

Caltrans now has a web site! To get to the web site, go to: http://www.dot.ca.gov

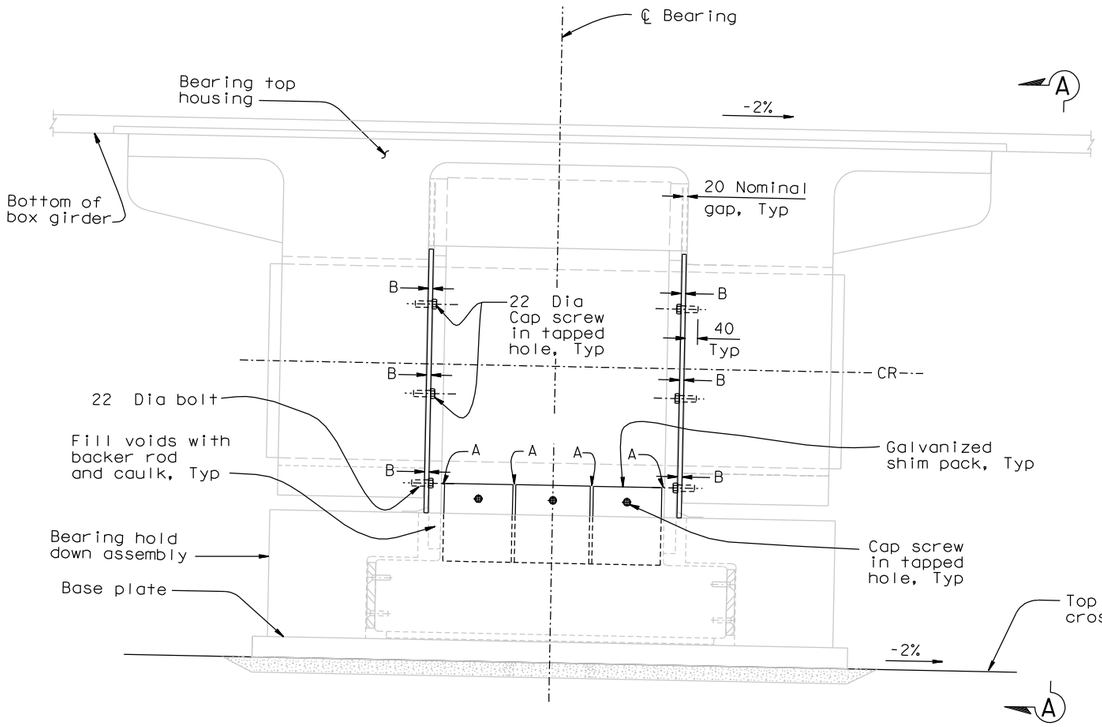


DETAIL OF BEARING ASSEMBLY

1:10

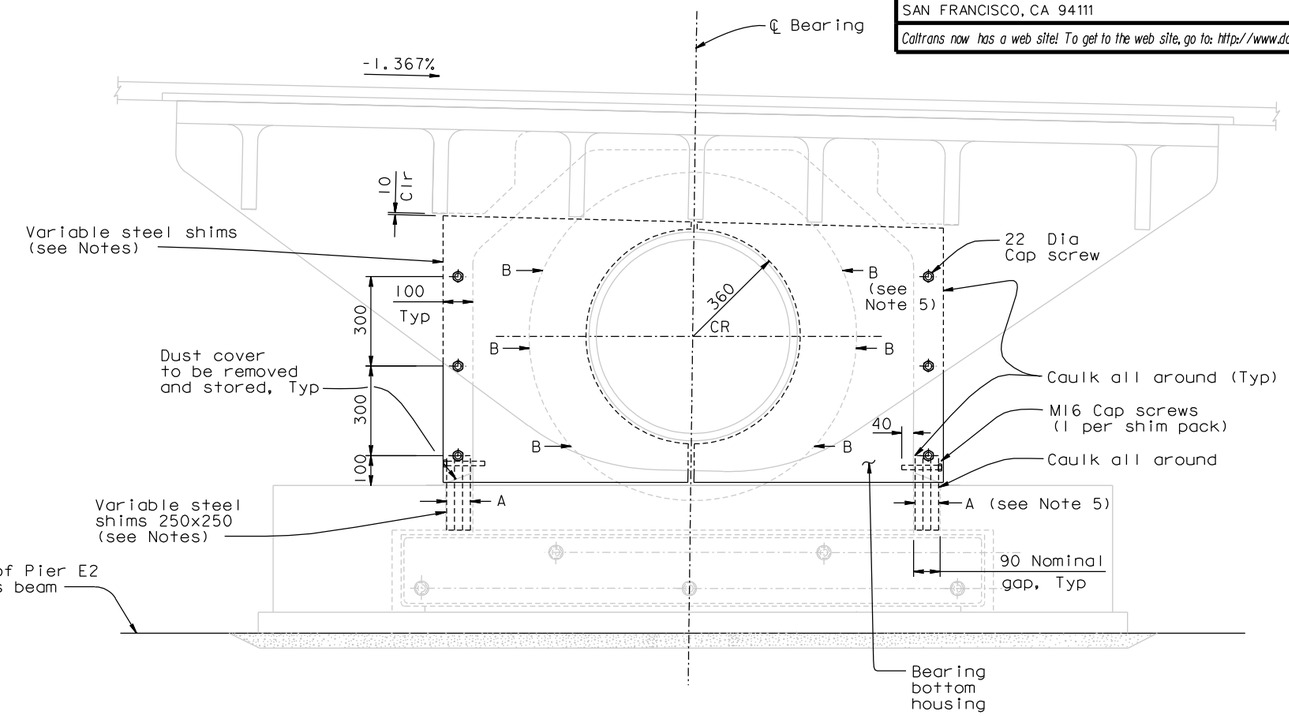


VIEW A-A

1:10

INSTALLATION SEQUENCE FOR BEARING SHIMS:

NOTE: Shimming shall be completed prior to SSO.

1. On one OBG (EB or WB), install longitudinal and transverse shimming on both bearings.
2. On the same OBG and for one temporary bearing at a time, transfer the load to the permanent bearing and remove temporary bearing shimming. Repeat for both temporary bearings.
3. Repeat Steps 1 & 2 for the remaining OBG.

NOTES:

1. Shims shall be galvanized.
2. Each shim shall be PTFE coated on one side.
3. Provide for each shim pack 4 shims tapered at 1/40 maximum, as required per survey.
4. Shim tight to within 2 mm, total of all plies.
5. Variable shims shall be fabricated and provided based on field measurements of gaps in the bearing assembly. Gap "A" in the lower housing is 90 mm nominal. Gap "B" in the upper housing is 20 mm nominal.

# E2 BEARING SHIMMING

CONTRACT CHANGE ORDER NO. _____
SHEET ____ OF ____

REQUESTS FOR INFORMATION NOT ADDRESSED IN THIS CCO REMAIN IN FORCE

ALL DIMENSIONS ARE IN MILLIMETERS UNLESS OTHERWISE SHOWN

100% PS&E

A. Akinsanya / W. Long
DESIGN OVERSIGHT
SIGN OFF DATE 07/03/13

| MARK | DATE | DESCRIPTIONS | BY | CH'D | CCO# |
|---|---|---|---|---|---|
| 0 | 07/03/13 | SHIMMING OF E2 BEARINGS | GB | MN | 331 |

REVISIONS

| | | | |
|---|---|---|---|
| DESIGN | BY G. Baker | CHECKED N. Vo | |
| DETAILS | BY G. Baker | CHECKED N. Vo | |
| QUANTITIES | BY G. Baker | CHECKED N. Vo | |

PREPARED FOR THE STATE OF CALIFORNIA DEPARTMENT OF TRANSPORTATION

M. Nader
PROJECT ENGINEER

BRIDGE NO. 34-0006L/R
KILOMETER POST 13.2/13.9

SAN FRANCISCO OAKLAND BAY BRIDGE
EAST SPAN SEISMIC SAFETY PROJECT
SELF-ANCHORED SUSPENSION BRIDGE
(SUPERSTRUCTURE & TOWER)

PIER E2 BEARING DETAILS NO. 1A

Rev. Date: 5-18-98

ORIGINAL SCALE IN MILLIMETERS FOR REDUCED PLANS 0 10 20 30 40 50 60 70 80 90 100

CU 04
EA 0120F1

DISREGARD PRINTS BEARING EARLIER REVISION DATES 07/03/13

REVISION DATES (PRELIMINARY STAGE ONLY)

SHEET 466S1 OF

FILE => I:\bb\04-012001\sas\contract plans and cco\cco\bearing a354 bc rod cco\1-original 07-03-13\dgn\akbrg01a.dgn

USERNAME => arivera DATE PLOTTED => 03 JUL 2013 TIME PLOTTED => 17:54:18

# SAS Superstructure

**Location: SAN FRANCISCO FROM 0.6 KM TO 1.3 KM EAST OF THE YERBA BUENA TUNNEL EAST PORTAL**

**Contract: 04-0120F4**

***Run Date*** *09-Jul-13*
***Time*** *3:34 PM*

## Transmittal Item Details for Doc No: 05.03.02-001917

## Subject: CCO 331 Pier E2 Plans ATPed Plan Sheets

| Summary | Item | Drawing No | Rev | Date | Description |
|---|---|---|---|---|---|
| **No Item Summary** | | | | | |
| | 001 | 0519s01 | 0 | 01-Jul-2013 | S1 & S2 New Design: General Arrangement |
| | 002 | 0519s02 | 0 | 01-Jul-2013 | S1 & S2 New Design: Concrete Outlines |
| | 003 | 0519s03 | 0 | 01-Jul-2013 | S1 & S2 New Design: Vertical PT Geometry |
| | 004 | 0519s04 | 0 | 01-Jul-2013 | S1 & S2 New Design: Saddle Details No. 1 |
| | 005 | 0519s05 | 0 | 01-Jul-2013 | S1 & S2 New Design: Saddle Details No.2 |
| | 006 | 0519s06 | 0 | 01-Jul-2013 | S1 & S2 New Design: Saddle Details No.3 |
| | 007 | 0519s07 | 0 | 01-Jul-2013 | S1 & S2 New Design: Saddle Details No. 4 |
| | 008 | 0519s08 | 0 | 01-Jul-2013 | S1 & S2 New Design: Saddle Details no. 5 |
| | 009 | 0519s09 | 0 | 01-Jul-2013 | S1 & S2 New Design: Saddle Details No. 6 |
| | 010 | 0519s10 | 0 | 01-Jul-2013 | S1 & S2 New Design: P. T. Details No. 1 |
| | 011 | 0519s11 | 0 | 01-Jul-2013 | S1 & S2 New Design: P. T. Details No. 2 |
| | 012 | 0519s12 | 0 | 01-Jul-2013 | S1 & S2 New Design: P. T. Details No. 3 |
| | 013 | 0519s13 | 0 | 01-Jul-2013 | S1 & S2 New Design: P. T. Details No. 4 |
| | 014 | 0519s14 | 0 | 01-Jul-2013 | S1 & S2 New Design: Reinforcement Details No.1 |
| | 015 | 0519s15 | 0 | 01-Jul-2013 | S1 & S2 New Design: Reinforcement Details No. 2 |
| | 016 | 0519s16 | 0 | 01-Jul-2013 | S1 & S2 New Design: Reinforcement Details No. 3 |
| | 017 | 0519s17 | 0 | 01-Jul-2013 | S1 & S2 New Design: Reinforcement Details No. 4 |
| | 018 | 0519s18 | 0 | 01-Jul-2013 | S1 & S2 New Design: Reinforcement Details No. 5 |
| | 019 | 0519s19 | 0 | 01-Jul-2013 | S1 & S2 New Design: Reinforcement Details No. 6 |
| | 020 | 0519s20 | 0 | 01-Jul-2013 | S1 & S2 New Desigh: Construction Details No. 1 |
| | 021 | 0519s21 | 0 | 01-Jul-2013 | S1 & S2 New Design: Construction Details No. 2 |
| | 022 | 0519s22 | 0 | 01-Jul-2013 | S1 & S2 New Design: Construction Details No. 3 |
| | 023 | 0519s23 | 0 | 01-Jul-2013 | S1 & S2 New Design: Construction Details No. 4 |
| | 024 | 0519s24 | 0 | 01-Jul-2013 | S1 & S2 New Design: Construction Details No. 5 |
| | 025 | 0519s25 | 0 | 01-Jul-2013 | S1 & S2 New Design: Construction Details No. 6 |
| | 026 | 0519s26 | 0 | 01-Jul-2013 | S1 & S2 New Design: Construction Details No. 7 |

**Transmittal Item Details for Doc No: 05.03.02-001917**

**Subject: CCO 331 Pier E2 Plans ATPed Plan Sheets**

| Summary | Item | Drawing No | Rev | Date | Description |
|---|---|---|---|---|---|
| | 027 | 0883s01 | 0 | 03-Jul-2013 | Pier E2 Bearing Details No. 1A |