DIST.	COUNTY	ROUTE	KILOMETER POST TOTAL PROJECT	SHEET NO.	TOTAL SHEETS
04	SF	80	13.2/13.9	887R3	1204

REGISTERED ENGINEER - CIVIL

12-6-04

PLANS APPROVAL DATE

Marwan N. Nader No. C 054426 Exp. 12/31/15 CIVIL STATE OF CALIFORNIA REGISTERED PROFESSIONAL ENGINEER

The State of California or its officers or agents shall not be responsible for the accuracy or completeness of electronic copies of this plan sheet.

T.Y. LIN / MOFFATT & NICHOL
825 BATTERY STREET
SAN FRANCISCO, CA 94111

Caltrans now has a web site! To get to the web site, go to: http://www.dot.ca.gov

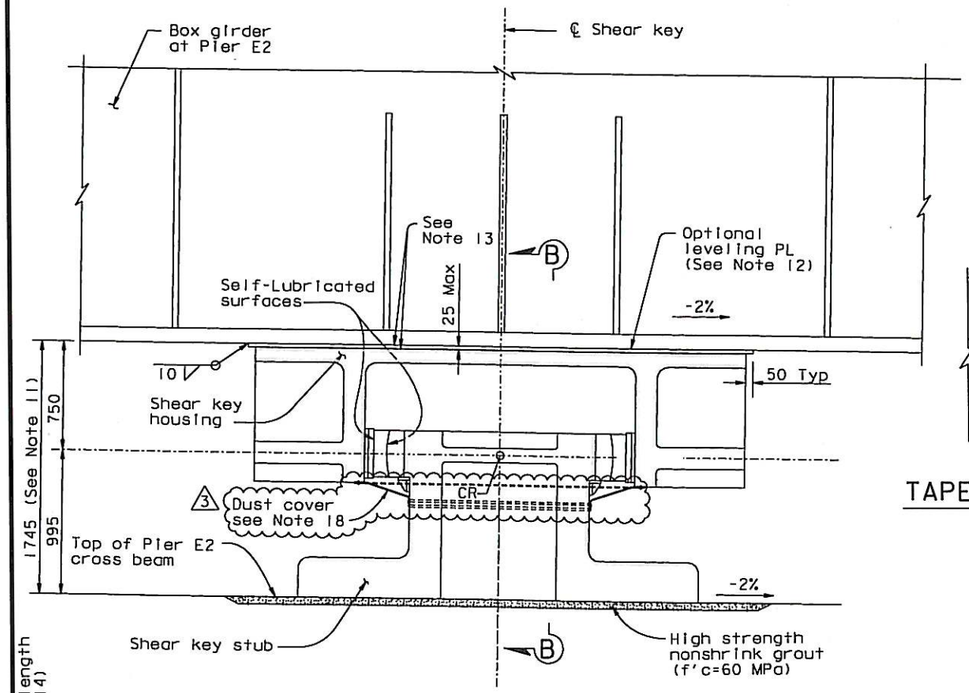

DETAIL B - SHEAR KEY ASSEMBLY

1:20
(Bolts not shown for clarity)
(Looking East)

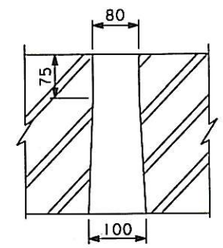

TAPERED HOLE DETAIL

1:5

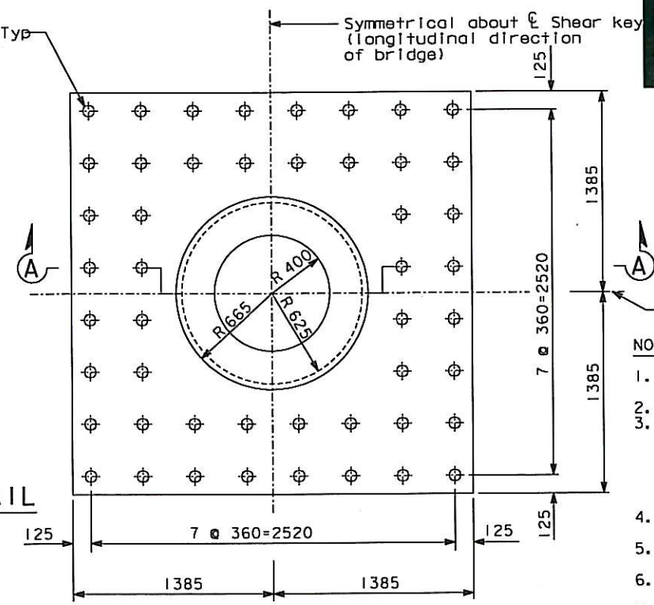

PLAN - SHEAR KEY STUB

1:20
(Anchor bolts not shown for clarity)

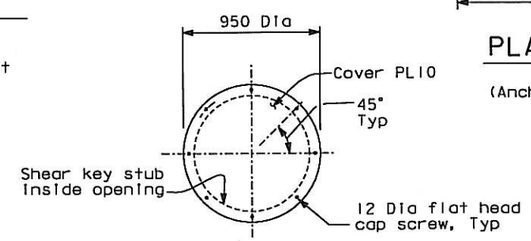

SECTION C-C

1:20

LEGEND:

CR	Center of Rotation
[· ·]	Indicates zone with Level I testing requirements

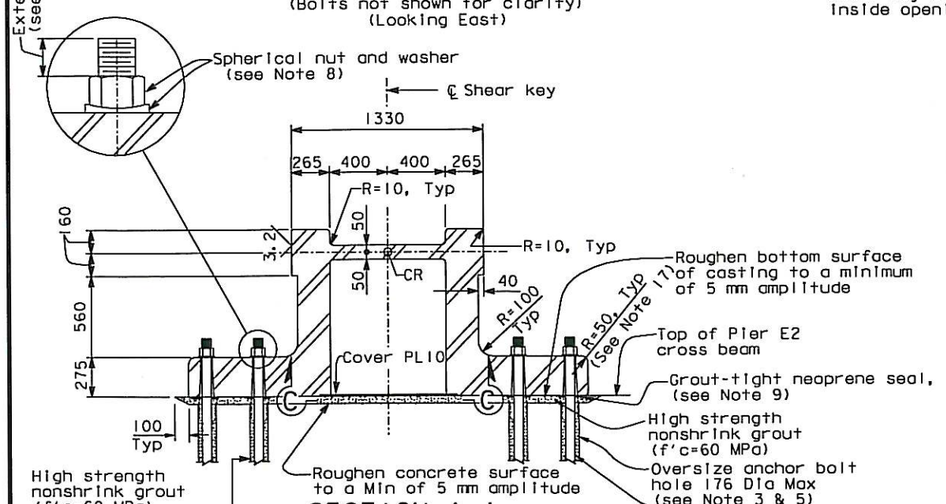

SECTION A-A

1:20

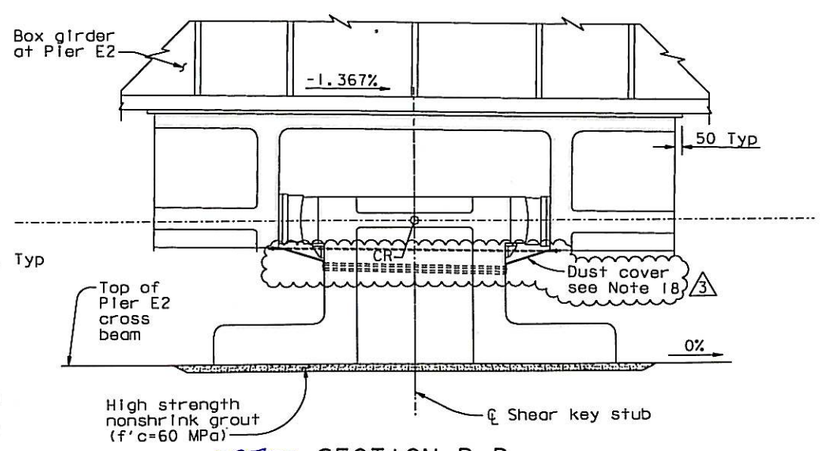

SECTION B-B

1:20
(Bolts not shown for clarity)

ALL DIMENSIONS ARE IN MILLIMETERS UNLESS OTHERWISE SHOWN

NOTES:

1. The shear key stub shall be Structural Casting Grade 345.
2. The lubricant shall be self-lubricated.
3. The grout pad thickness is shown for information only. The Contractor shall verify in the field the grout pad thickness required to align the center of rotation of the shear key and bearings at 0.750 m from the bottom surface of the box girder.
4. The anchor bolts shall be pretensioned by jacking to 70% ultimate tensile strength.
5. The oversize anchor bolt holes are provided to accommodate construction tolerances.
6. For additional prestressing details, see "Prestressing Notes" sheet.
7. The prestressed anchor bolts shall be wrapped in a PT supplier recommended debonding tape, subject to the review and approval of the Engineer.
8. The spherical nut and washer shall be able to accomodate a maximum rotation of 3 degrees in any direction.
9. Grout-tight neoprene seal shown is schematic and is for information only. The seal shall prevent any high strength nonshrink grout from seeping inside the anchor bolt tapered holes during grouting of the shear key stub. This is necessary for proper stressing of the anchor bolts. The Contractor may propose an alternate detail to suit their erection means and methods, subject to review and approval of the Engineer.
10. Bolted connection between shear key housing and box girder is slip-critical connection with class B contact surface.
11. The Contractor may provide optional leveling plates to achieve fit-up and level contact surfaces for the bearings and shear keys. The Contractor shall erect the E2 cap beam and E2 girders to the elevations and tolerances specified in the plans and special provisions.
12. Leveling plate shall be attached with plug welds at 0.5 m Max spacing, and a perimeter fillet weld.
13. All faying surfaces of the girder key plate, the shear key housing, and the optional leveling plate shall be machined after all welding for flatness and smoothness as specified for the top of the shear key housing. See "Pier E2 Shear Key Detail No. 2" sheet.
14. Extension length for anchor bolts at "E" Line and "W" Line shear keys shall be long enough to engage hydraulic jack.
15. At the Contractor's option, the tapered anchor hole may increase to 200 in lieu of the 100 shown on the plans.
16. The top shear key stub shaft section shall be "snug-fit" inside the spherical ring with a diameter gap between ring and stub of 1 mm Max.
17. At the Contractor's option, 10 mm radius may be used to facilitate stressing of anchor bolts.
18. For Dust Cover Details see "Pier E2 Shear Key Details No. 5" sheet.

REQUESTS FOR INFORMATION NOT ADDRESSED IN THIS CCO REMAIN IN FORCE

CONTRACT CHANGE ORDER NO. 327S2
SHEET 2 OF 7

MARK	DATE	DESCRIPTIONS	BY	CH'D	CCO#
3	04/04/14	PIER E2 DUST COVER	GM	MN	327S2
2	07/17/09	E2 CROSS BEAM	MN	NV	71
1	09/26/08	E2 CROSS BEAM	MN	NV	71

REVISIONS

	BY	CHECKED
DESIGN	M. Nader	J. Denis
DETAILS	N. Vo	J. Denis
QUANTITIES	N. Vo	J. Denis

PREPARED FOR THE STATE OF CALIFORNIA DEPARTMENT OF TRANSPORTATION

R. Vaziadeh/V. Toan/Y.L./W.L./F.C.
DESIGN OVERSIGHT
SIGN OFF DATE 04/04/14

R. Manzanarez
PROJECT ENGINEER

BRIDGE NO. 34-0006L/R
KILOMETER POST 13.2/13.9

CU 04
EA 0120F1

SAN FRANCISCO OAKLAND BAY BRIDGE
EAST SPAN SEISMIC SAFETY PROJECT
SELF-ANCHORED SUSPENSION BRIDGE
(SUPERSTRUCTURE & TOWER)

PIER E2 SHEAR KEY DETAILS NO. 1

DISREGARD PRINTS BEARING EARLIER REVISION DATES 04/04/02 07/01/02 12/16/02 05/16/03 12/01/05

REVISION DATES (PRELIMINARY STAGE ONLY)

SHEET 470R3 OF

Rev. Date: 5-18-98

ORIGINAL SCALE IN MILLIMETERS FOR REDUCED PLANS 0 10 20 30 40 50 60 70 80 90 100

FILE -> I:\bb\04-012001\sas\contract plans and cco\cco\cco*327s2\1-original 04-04-14\dgn\aksrd01a.dgn

USERNAME -> ALthonsk DATE PLOTTED -> 04 APR 2014 TIME PLOTTED -> 10:21:59

100 % PS&E

DIST.	COUNTY	ROUTE	KILOMETER POST TOTAL PROJECT	SHEET NO.	TOTAL SHEETS
04	SF	80	13.2/13.9	888BR4	1204

REGISTERED ENGINEER - CIVIL

12-9-05

PLANS APPROVAL DATE

REGISTERED PROFESSIONAL ENGINEER Marwan N. Nader No. C 054426 Exp. 12/31/15 CIVIL STATE OF CALIFORNIA

The State of California or its officers or agents shall not be responsible for the accuracy or completeness of electronic copies of this plan sheet.

T.Y. LIN / MOFFATT & NICHOL
825 BATTERY STREET
SAN FRANCISCO, CA 94111

Caltrans now has a web site! To get to the web site, go to: http://www.dot.ca.gov

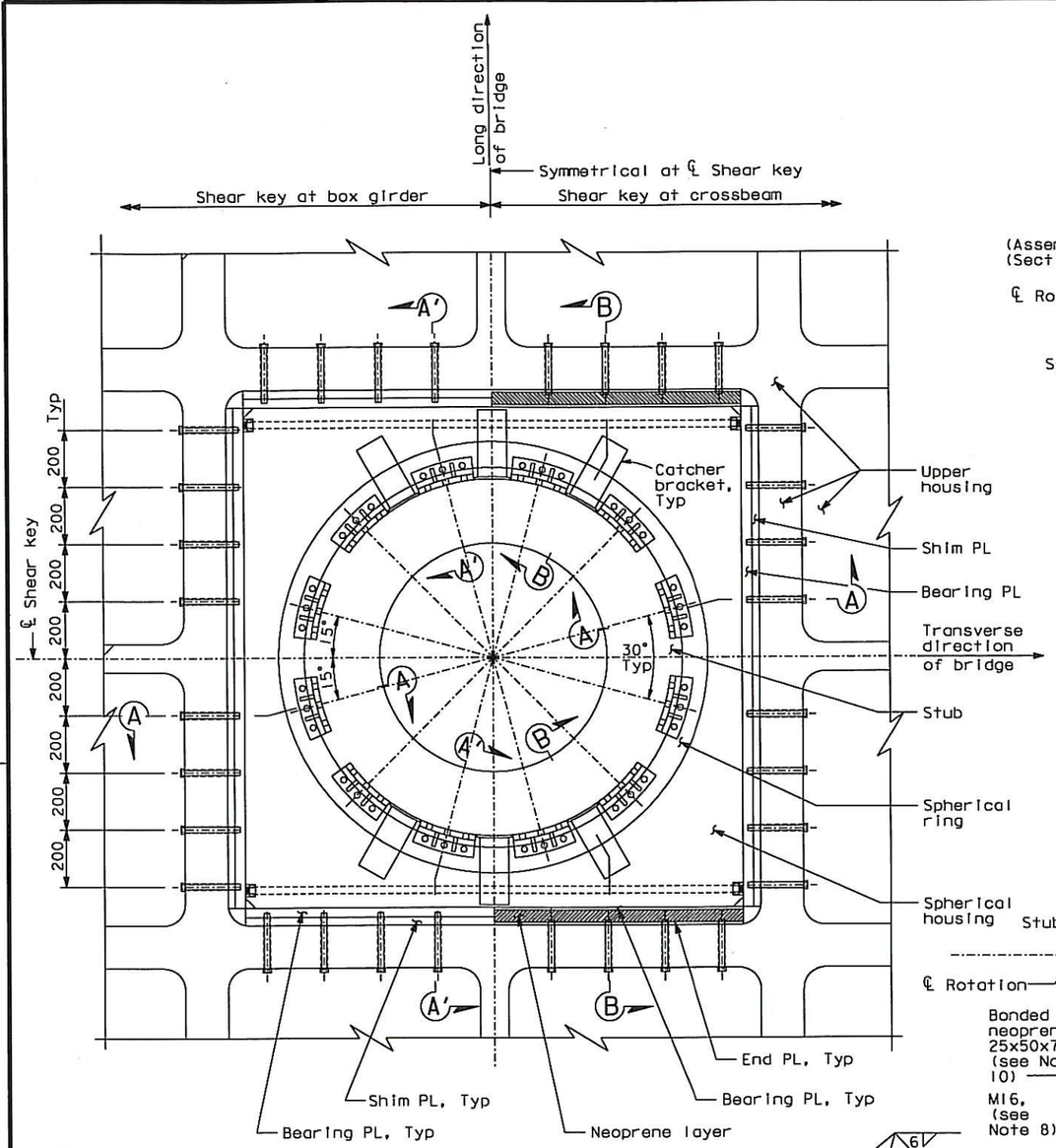

BUSHING CONNECTION DETAIL (Looking up)
1:10

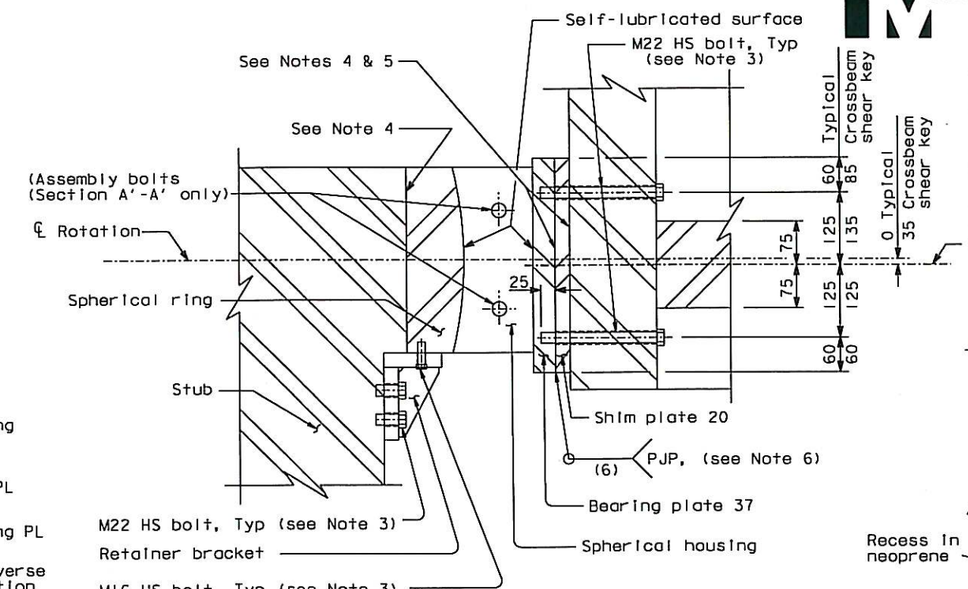

SECTION A-A (Section A'-A' similar)
1:5

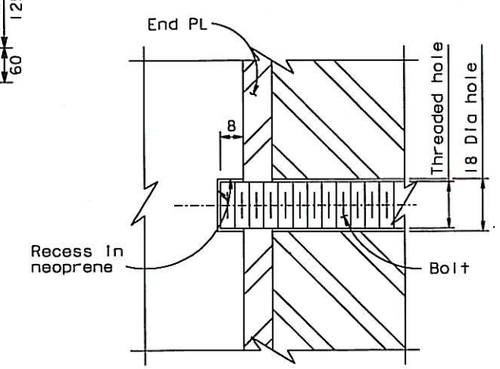

DETAIL A
1:1

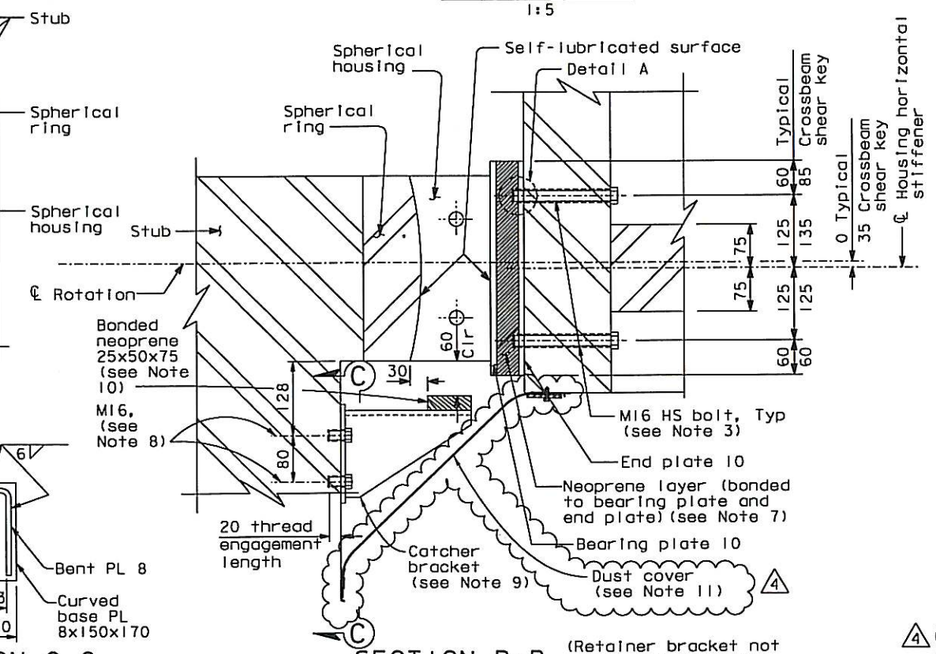

SECTION B-B
1:5

(Retainer bracket not shown for clarity)

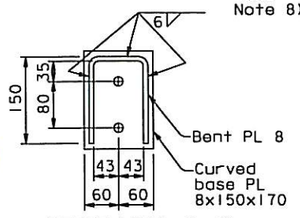

SECTION C-C
1:5

ALL DIMENSIONS ARE IN MILLIMETERS UNLESS OTHERWISE SHOWN

NOTES:

1. The mating surfaces of the spherical ring and bearing plate shall be 5 mm thick stainless steel weld overlay conforming to the requirements of A240, Type 316.
2. The lubricant shall be self-lubricated.
3. High strength bolts shall be installed snug-tight only.
4. Contact steel surfaces shall comply with Class A surface (slip coefficient 0.33).
5. The Contractor shall ensure the flatness requirements are met at the faying surfaces.
6. Welding shall be made after field measurement and actual shim plate thickness has been determined.
7. Field measurement shall be made to determine actual thickness of neoprene layer.
8. Bolts shall be installed snug-tight plus 1/4 turn.
9. Catcher brackets shall be installed for shear keys at crossbeam only.
10. Neoprene pad shall satisfy the requirements of Caltrans Standard Specifications Section 51-1.14.
11. For Dust Cover Details see "Pier E2 Shear Key Details No. 5" sheet. (4)

CONTRACT CHANGE ORDER NO. 32752
SHEET 3 OF 7

REQUESTS FOR INFORMATION NOT ADDRESSED IN THIS CCO REMAIN IN FORCE

MARK	DATE	DESCRIPTIONS	BY	CH'D	CCO#
4	04/04/14	PIER E2 DUST COVERS	GM	MN	32752
3	01/04/11	E2 SHEAR KEY CATCHER BRACKETS	MN	NV	71S1
2	02/13/09	E2 CROSS BEAM	MN	NV	71
1	09/26/08	E2 CROSS BEAM	MN	NV	71

REVISIONS

R. Valizadeh/V. Toan/Y.L./W.L./F.C.
DESIGN OVERSIGHT
SIGN OFF DATE 04/04/14

Rev. Date: 5-18-98

	BY	CHECKED
DESIGN	M. Nader	L. Rus
DETAILS	A. Sanjines	J. Leventini
QUANTITIES	A. Sanjines	J. Leventini

PREPARED FOR THE STATE OF CALIFORNIA DEPARTMENT OF TRANSPORTATION

R. Manzanarez
PROJECT ENGINEER

BRIDGE NO. 34-0006L/R
KILOMETER POST 13.2/13.9

CU 04
EA 0120F1

ORIGINAL SCALE IN MILLIMETERS FOR REDUCED PLANS 0 10 20 30 40 50 60 70 80 90 100

DISREGARD PRINTS BEARING EARLIER REVISION DATES 12/01/05

REVISION DATES (PRELIMINARY STAGE ONLY)

SHEET 471 OF BR4

SAN FRANCISCO OAKLAND BAY BRIDGE
EAST SPAN SEISMIC SAFETY PROJECT
SELF-ANCHORED SUSPENSION BRIDGE
(SUPERSTRUCTURE & TOWER)

PIER E2 SHEAR KEY DETAILS NO. 4

100 % PS&E

USERNAME => ALtahanski DATE PLOTTED => 04 APR 2014 TIME PLOTTED => 10:23:22

FILE => I:\bb\04-012001\sas\contract plans and cco\cco\cco#32752\1-original 04-04-14\dgn\aksrd01d.dgn

DIST.	COUNTY	ROUTE	KILOMETER POST TOTAL PROJECT	SHEET NO.	TOTAL SHEETS
04	SF	80	13.2/13.9	888C	1204

REGISTERED ENGINEER - CIVIL

04-04-14
PLANS APPROVAL DATE

REGISTERED PROFESSIONAL ENGINEER Marwan N. Nader No. C 054426 Exp. 12/31/15 CIVIL STATE OF CALIFORNIA

The State of California or its officers or agents shall not be responsible for the accuracy or completeness of electronic copies of this plan sheet.

T.Y. LIN / MOFFATT & NICHOL
825 BATTERY STREET
SAN FRANCISCO, CA 94111

Caltrans now has a web site! To get to the web site, go to: http://www.dot.ca.gov

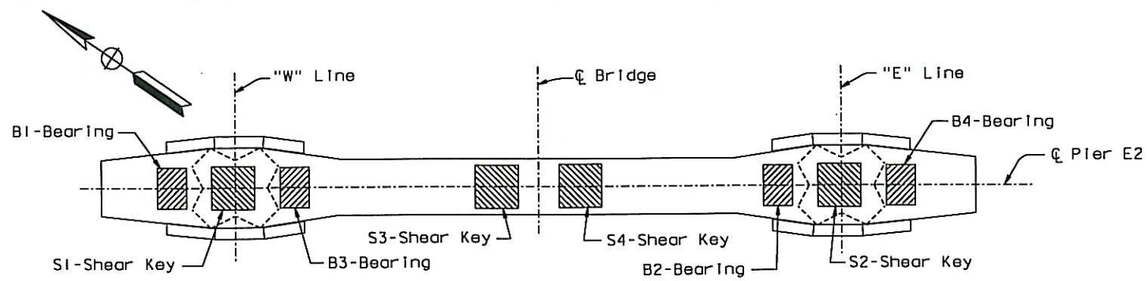

KEY PLAN
1:200

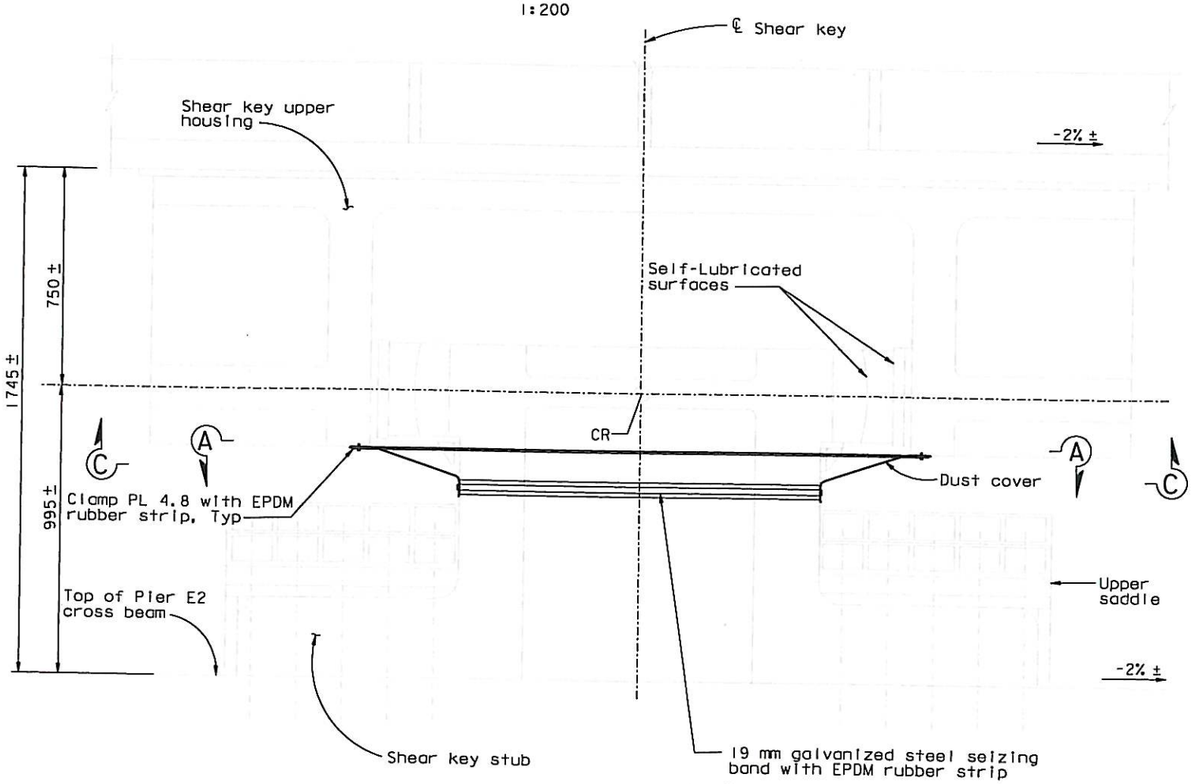

SHEAR KEY 1 & 2
1:10
(Looking East)

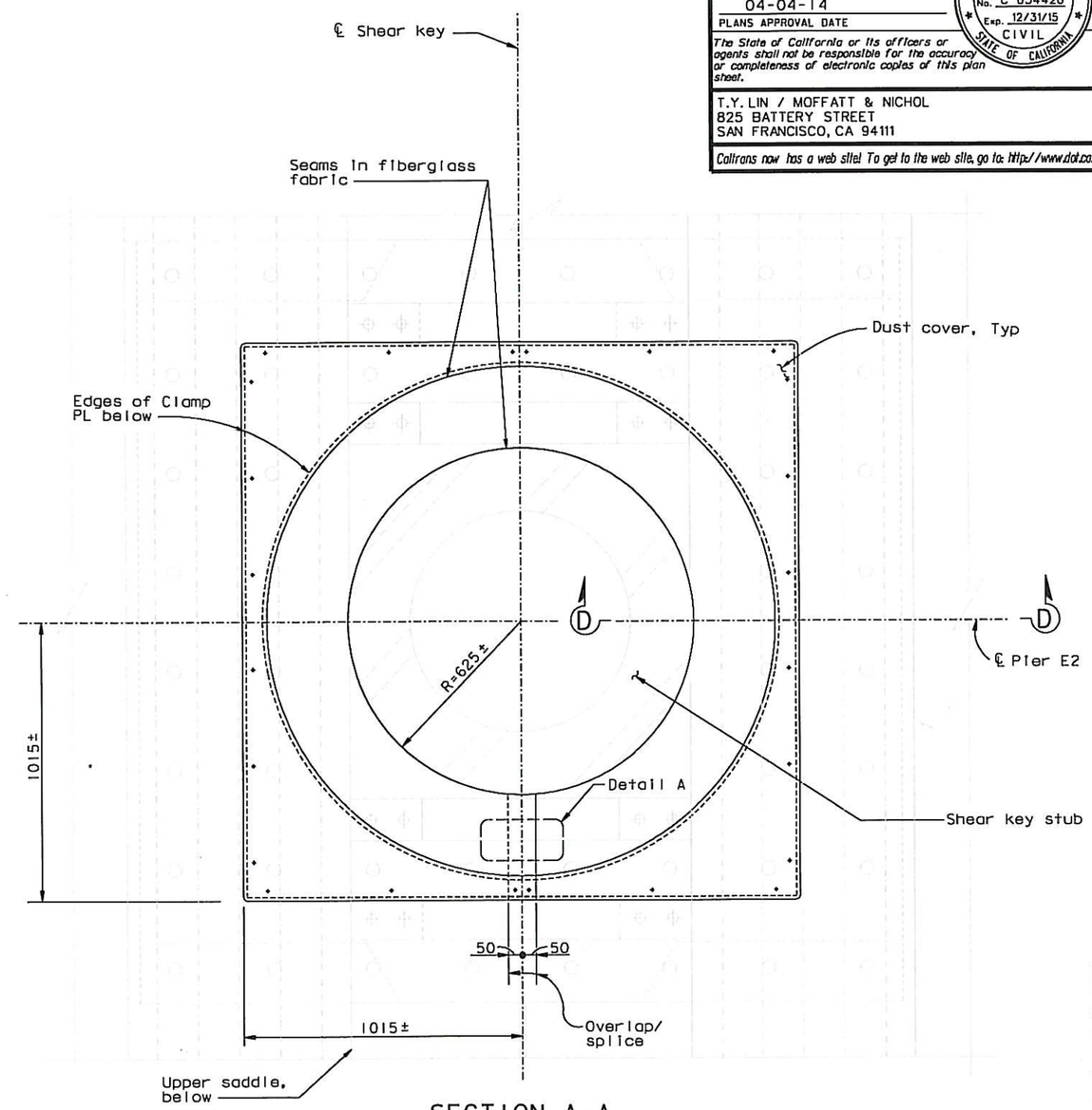

SECTION A-A
1:10

NOTES:

1. For Section C-C and Detail A, see "Pier E2 Shear Key Details No.7" sheet.
2. For Section D-D, see "Pier E2 Shear Key Details No.8" sheet.

CONTRACT CHANGE ORDER NO. 327S2
SHEET 4 OF 7

REQUESTS FOR INFORMATION NOT ADDRESSED IN THIS CCO REMAIN IN FORCE

ALL DIMENSIONS ARE IN MILLIMETERS UNLESS OTHERWISE SHOWN

A. Akinsanya / W. Long
DESIGN OVERSIGHT
SIGN OFF DATE 04/04/14

MARK	DATE	DESCRIPTIONS	BY	CH'D	CCO#
0	04/04/14	PIER E2 DUST COVER	GM	MN	327S2

REVISIONS

DESIGN	BY G. Mak	CHECKED M. Nader	
DETAILS	BY C. Chol	CHECKED M. Nader	
QUANTITIES	BY C. Chol	CHECKED M. Nader	

PREPARED FOR THE STATE OF CALIFORNIA DEPARTMENT OF TRANSPORTATION

M. Nader
PROJECT ENGINEER

BRIDGE NO. 34-0006L/R
KILOMETER POST 13.2/13.9

SAN FRANCISCO OAKLAND BAY BRIDGE
EAST SPAN SEISMIC SAFETY PROJECT
SELF-ANCHORED SUSPENSION BRIDGE
(SUPERSTRUCTURE & TOWER)

PIER E2 SHEAR KEY DETAILS NO.5

Rev. Date: 5-22-13

ORIGINAL SCALE IN MILLIMETERS FOR REDUCED PLANS 0 10 20 30 40 50 60 70 80 90 100

CU 04
EA 0120F1

DISREGARD PRINTS BEARING EARLIER REVISION DATES 04/04/14

REVISION DATES (PRELIMINARY STAGE ONLY)

SHEET 471C OF

FILE => I:\bb\04-012001\sas\contract plans and cco\cco\cco#327s2\1-original 04-04-14\dgn\aksrd01a.dgn

100 % PS&E

USERNAME => AlisonskyDATE PLOTTED => 04 APR 2014 TIME PLOTTED => 10:24:01

DIST.	COUNTY	ROUTE	KILOMETER POST TOTAL PROJECT	SHEET NO.	TOTAL SHEETS
04	SF	80	13.2/13.9	888D	1204

REGISTERED ENGINEER - CIVIL

04-04-14
PLANS APPROVAL DATE

REGISTERED PROFESSIONAL ENGINEER Marwan N. Nader No. C 054426 Exp. 12/31/15 CIVIL STATE OF CALIFORNIA

The State of California or its officers or agents shall not be responsible for the accuracy or completeness of electronic copies of this plan sheet.

T.Y. LIN / MOFFATT & NICHOL
825 BATTERY STREET
SAN FRANCISCO, CA 94111

Caltrans now has a web site! To get to the web site, go to: http://www.dot.ca.gov

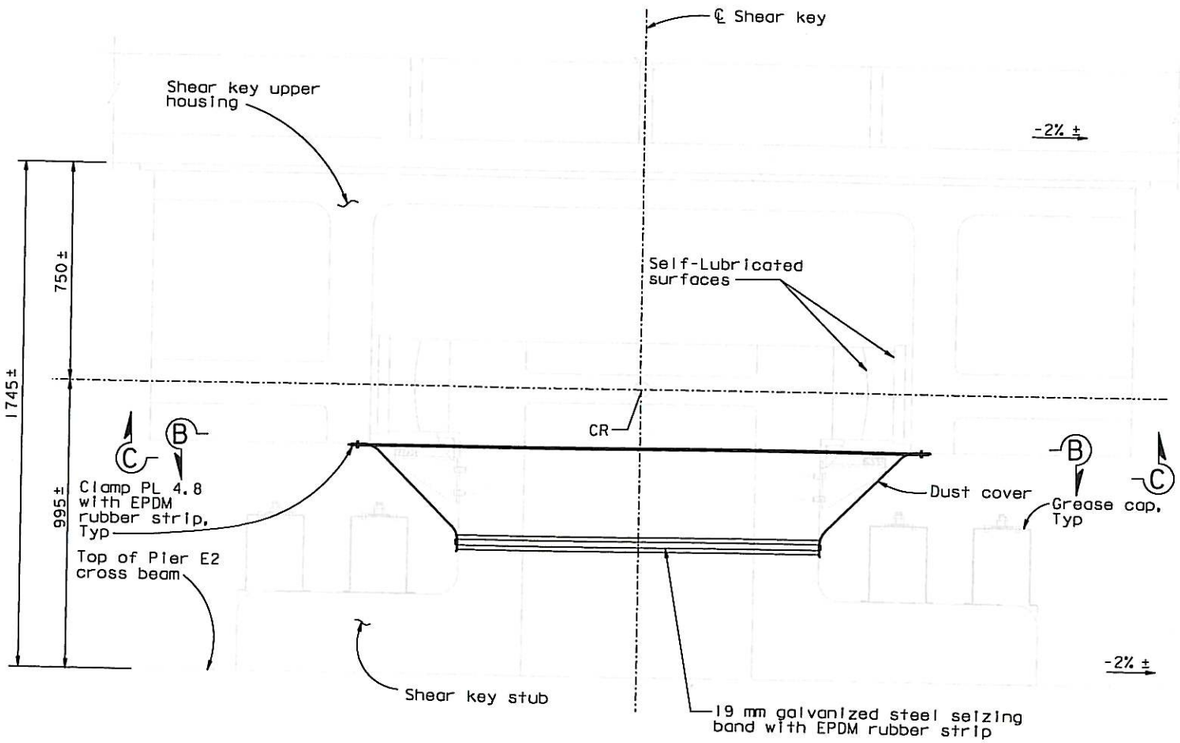

SHEAR KEY 3 & 4
1:10

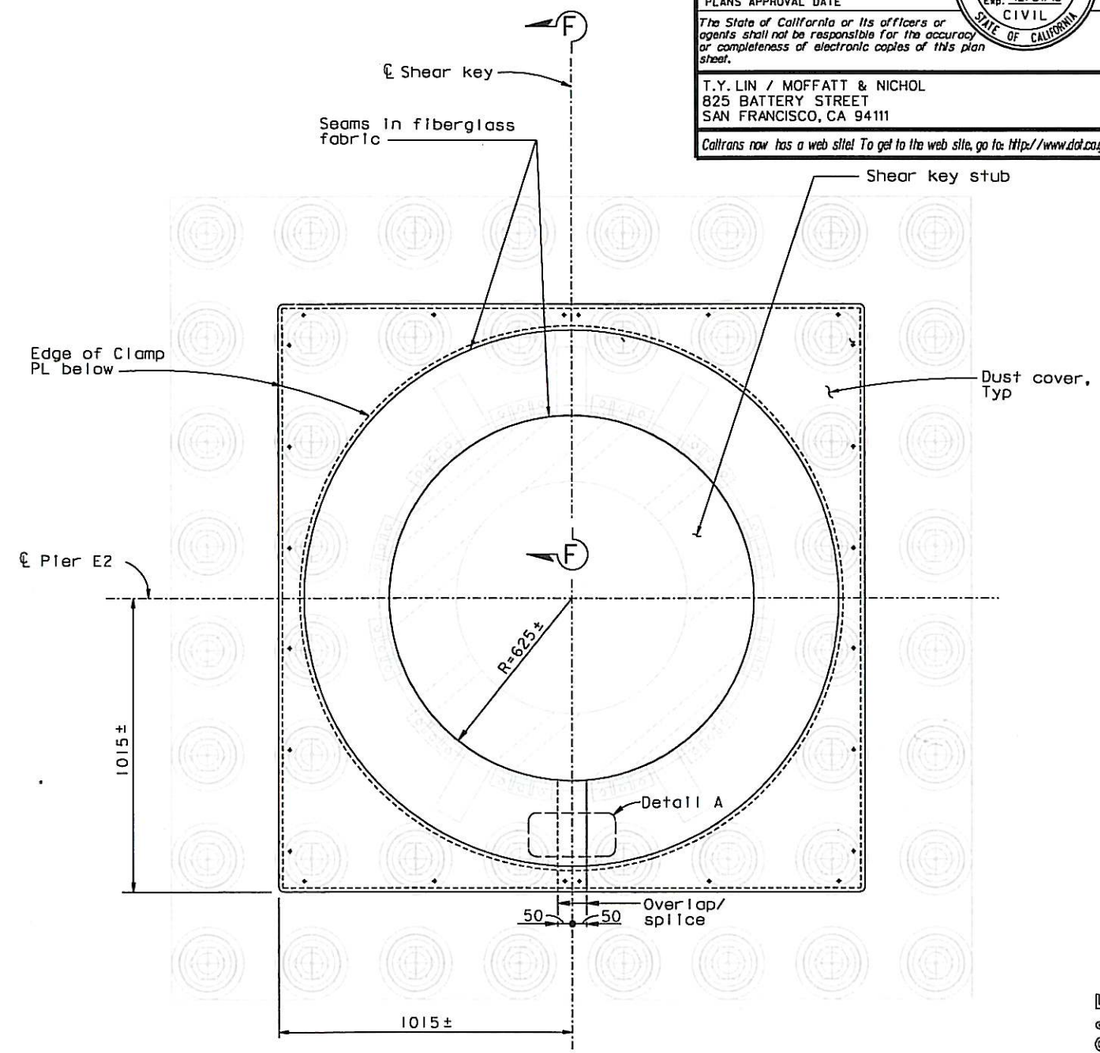

SECTION B-B
1:10

NOTES:

1. For Section C-C and Detail A, see "Pier E2 Shear Key Details No. 7" sheet.
2. For Section F-F, see "Pier E2 Shear Key Details No. 8" sheet.

CONTRACT CHANGE ORDER NO. 32752
SHEET 5 OF 7

REQUESTS FOR INFORMATION NOT ADDRESSED IN THIS CCO REMAIN IN FORCE

ALL DIMENSIONS ARE IN MILLIMETERS UNLESS OTHERWISE SHOWN

A. Akinsanya / W. Long
DESIGN OVERSIGHT
SIGN OFF DATE 04/04/14

MARK	DATE	DESCRIPTIONS	BY	CH'D	CCO#
0	04/04/14	PIER E2 DUST COVER	GM	MN	32752

REVISIONS

DESIGN	BY G. Mok	CHECKED M. Nader	
DETAILS	BY C. Chol	CHECKED M. Nader	
QUANTITIES	BY C. Chol	CHECKED M. Nader	

PREPARED FOR THE STATE OF CALIFORNIA DEPARTMENT OF TRANSPORTATION

M. Nader
PROJECT ENGINEER

BRIDGE NO. 34-0006L/R
KILOMETER POST 13.2/13.9

SAN FRANCISCO OAKLAND BAY BRIDGE
EAST SPAN SEISMIC SAFETY PROJECT
SELF-ANCHORED SUSPENSION BRIDGE
(SUPERSTRUCTURE & TOWER)

PIER E2 SHEAR KEY DETAILS NO. 6

Rev. Date: 5-22-13

ORIGINAL SCALE IN MILLIMETERS FOR REDUCED PLANS 0 10 20 30 40 50 60 70 80 90 100

CU 04
EA 0120F1

DISREGARD PRINTS BEARING EARLIER REVISION DATES → 04/04/14

REVISION DATES (PRELIMINARY STAGE ONLY)

SHEET 471D OF

FILE => I:\bb\04-012001\sas\contract plans and cco\cco\cco#32752\1-original 04-04-14\dgn\aksrd01f.dgn

100 % PS&E

USERNAME => AlIshansk DATE PLOTTED => 04 APR 2014 TIME PLOTTED => 10:24:35

DIST.	COUNTY	ROUTE	KILOMETER POST TOTAL PROJECT	SHEET NO.	TOTAL SHEETS
04	SF	80	13.2/13.9	888E	1204

REGISTERED ENGINEER - CIVIL

04-04-14

PLANS APPROVAL DATE

REGISTERED PROFESSIONAL ENGINEER Marwan N. Nader No. C 054426 Exp. 12/31/15 CIVIL STATE OF CALIFORNIA

The State of California or its officers or agents shall not be responsible for the accuracy or completeness of electronic copies of this plan sheet.

T.Y. LIN / MOFFATT & NICHOL
825 BATTERY STREET
SAN FRANCISCO, CA 94111

Caltrans now has a web site! To get to the web site, go to: http://www.dot.ca.gov

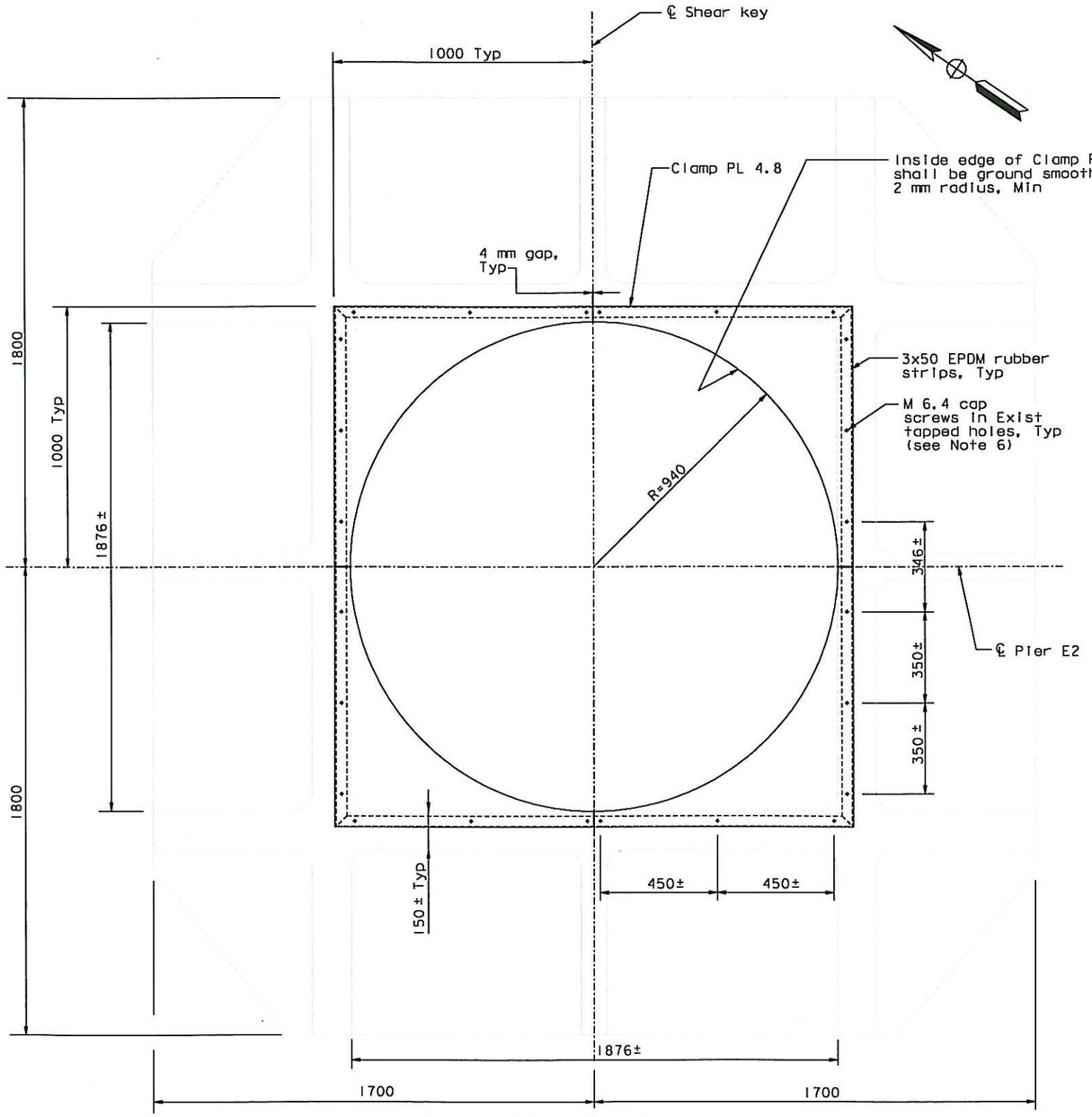

SECTION C-C (Looking Up)
1:10

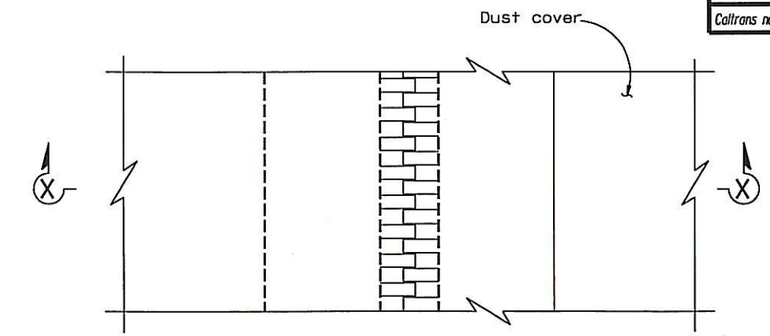

DETAIL A
1:1

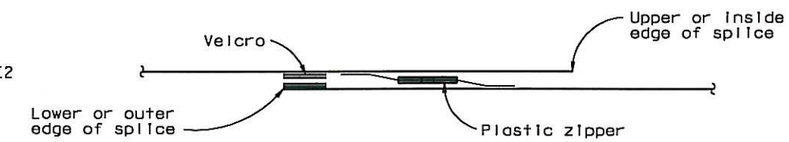

SECTION X-X
1:1

NOTES:

1. Dust cover shall be made from 2 layers of woven fiberglass fabric 38 ounces per square yard. Color of the fiberglass fabric shall be white. Contractor to provide sample to Engineer for review and approval. Contractor may propose alternative material for review and approval by the Engineer.
2. Contractor shall field verify all dimensions before purchasing and fabricating components for the dust covers.
3. Clamp plates shall be ASTM A36 hot-dipped galvanized steel and painted with organic zinc rich primer.
4. 19 mm galvanized steel seizing bands shall have average breaking strength of not less than 1500 lbs and shall be installed per manufacturer's recommendations.
5. EPDM rubber strips shall have Shore A hardness of durometer 40 +/- 5. Contractor may propose alternative material for review and approval by the Engineer.
6. Cap screws shall be ASTM A449 or equivalent. Cap screws shall be zinc coated and furnished with lock washer and flat washer.

CONTRACT CHANGE ORDER NO. 327S2
SHEET 6 OF 7

REQUESTS FOR INFORMATION NOT ADDRESSED IN THIS CCO REMAIN IN FORCE

ALL DIMENSIONS ARE IN MILLIMETERS UNLESS OTHERWISE SHOWN

100 % PS&E

USERNAME => ALishansky DATE PLOTTED => 04 APR 2014

A. Akinsanya / W. Long
DESIGN OVERSIGHT
SIGN OFF DATE 04/04/14

MARK	DATE	DESCRIPTIONS	BY	CH'D	CCO#
0	04/04/14	PIER E2 DUST COVERS	GM	MN	327S2

REVISIONS

	BY	CHECKED
DESIGN	G. Mok	M. Nader
DETAILS	G. Choi	M. Nader
QUANTITIES	G. Choi	M. Nader

PREPARED FOR THE STATE OF CALIFORNIA DEPARTMENT OF TRANSPORTATION

M. Nader
PROJECT ENGINEER

BRIDGE NO. 34-0006L/R
KILOMETER POST 13.2/13.9

SAN FRANCISCO OAKLAND BAY BRIDGE
EAST SPAN SEISMIC SAFETY PROJECT
SELF-ANCHORED SUSPENSION BRIDGE
(SUPERSTRUCTURE & TOWER)

PIER E2 SHEAR KEY DETAILS NO. 7

Rev. Date: 5-18-98

ORIGINAL SCALE IN MILLIMETERS FOR REDUCED PLANS 0 10 20 30 40 50 60 70 80 90 100

CU 04
EA 0120F1

DISREGARD PRINTS BEARING EARLIER REVISION DATES

REVISION DATES (PRELIMINARY STAGE ONLY) 04/04/14

SHEET 471E OF

FILE => I:\bb\04-012001\sas\contract plans and cco\cco\cco#327s2\1-original 04-04-14\dgn\aksrd01g.dgn

DIST.	COUNTY	ROUTE	KILOMETER POST TOTAL PROJECT	SHEET NO.	TOTAL SHEETS
04	SF	80	13.2/13.9	888F	1204

REGISTERED ENGINEER - CIVIL

04-04-14
PLANS APPROVAL DATE

REGISTERED PROFESSIONAL ENGINEER Marwan N. Nader No. C 054426 Exp. 12/31/15 CIVIL STATE OF CALIFORNIA

The State of California or its officers or agents shall not be responsible for the accuracy or completeness of electronic copies of this plan sheet.

T.Y. LIN / MOFFATT & NICHOL
825 BATTERY STREET
SAN FRANCISCO, CA 94111

Caltrans now has a web site! To get to the web site, go to: http://www.dot.ca.gov

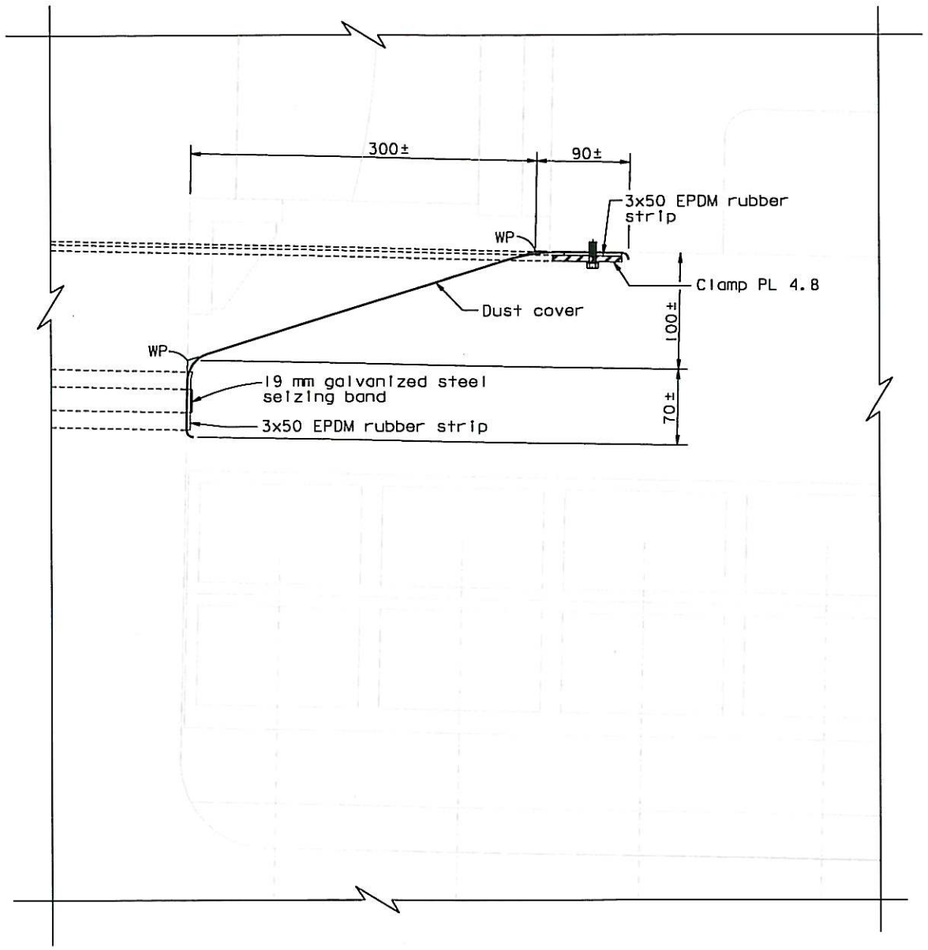

SECTION D-D
1:2.5

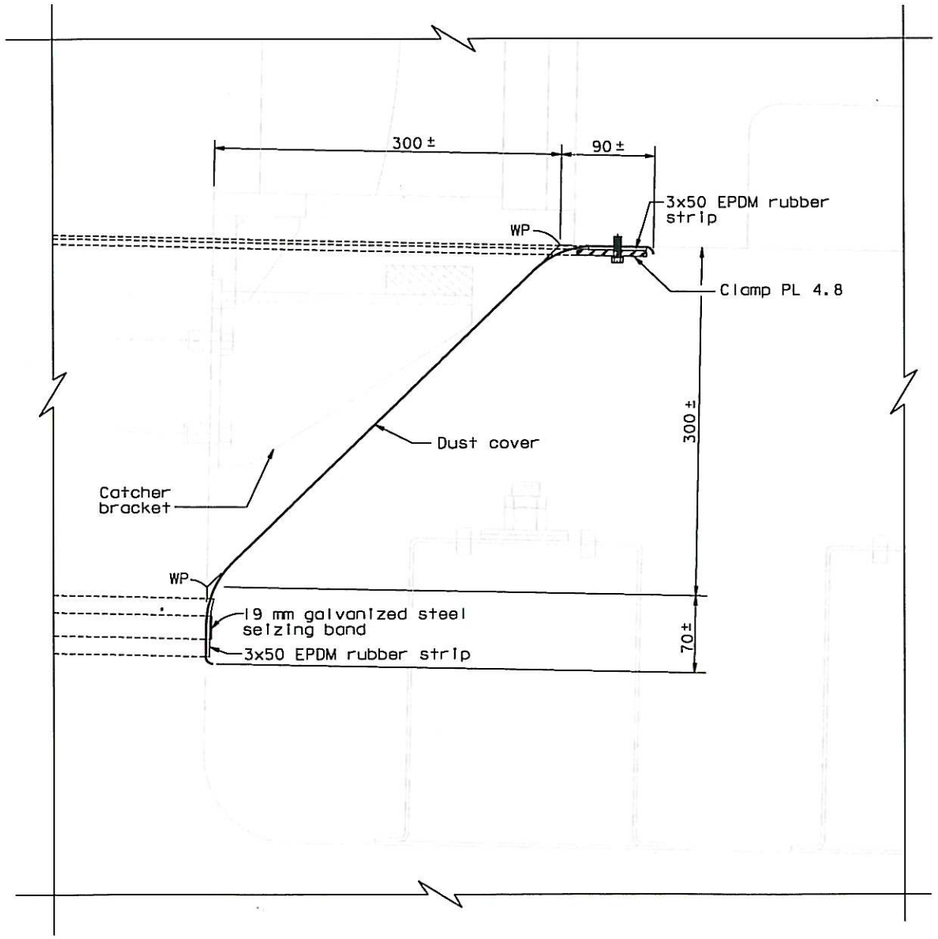

SECTION F-F
1:2.5

CONTRACT CHANGE ORDER NO. 32752
SHEET 7 OF 7

REQUESTS FOR INFORMATION NOT ADDRESSED IN THIS CCO REMAIN IN FORCE

ALL DIMENSIONS ARE IN MILLIMETERS UNLESS OTHERWISE SHOWN

100 % PS&E

A. Akinsanya / W. Long
DESIGN OVERSIGHT
SIGN OFF DATE 04/04/14

MARK	DATE	DESCRIPTIONS	BY	CH'D	CCO#
0	04/04/14	PIER E2 DUST COVERS	GM	MN	32752

REVISIONS

DESIGN	BY G. Mok	CHECKED M. Nader	
DETAILS	BY C. Chai	CHECKED M. Nader	
QUANTITIES	BY C. Chai	CHECKED M. Nader	

PREPARED FOR THE STATE OF CALIFORNIA DEPARTMENT OF TRANSPORTATION

M. Nader
PROJECT ENGINEER

BRIDGE NO. 34-0006L/R
KILOMETER POST 13.2/13.9

SAN FRANCISCO OAKLAND BAY BRIDGE
EAST SPAN SEISMIC SAFETY PROJECT
SELF-ANCHORED SUSPENSION BRIDGE
(SUPERSTRUCTURE & TOWER)

PIER E2 SHEAR KEY DETAILS NO. 8

Rev. Date: 5-18-98

ORIGINAL SCALE IN MILLIMETERS FOR REDUCED PLANS 0 10 20 30 40 50 60 70 80 90 100

CU 04
EA 0120F1

DISREGARD PRINTS BEARING EARLIER REVISION DATES → 04/04/14

REVISION DATES (PRELIMINARY STAGE ONLY)

SHEET 471F OF

FILE => I:\bb\04-012001\sas\contract plans and cco\cco\cco#32752\1-original 04-04-14\dgn\aksrd01h.dgn

USERNAME => ALfarnsk DATE PLOTTED => 04 APR 2014