DIST.	COUNTY	ROUTE	KILOMETER POST TOTAL PROJECT	SHEET NO.	TOTAL SHEETS
04	SF	80	13.2/13.9	10375 4R2	1204

REGISTERED ENGINEER - CIVIL

07-20-07

PLANS APPROVAL DATE

REGISTERED PROFESSIONAL ENGINEER Tien Hung Ho No. C 43990 Exp. 06/30/15 CIVIL STATE OF CALIFORNIA

The State of California or its officers or agents shall not be responsible for the accuracy or completeness of electronic copies of this plan sheet.

T.Y. LIN / MOFFATT & NICHOL
825 BATTERY STREET
SAN FRANCISCO, CA 94111

Caltrans now has a web site! To get to the web site, go to: http://www.dot.ca.gov

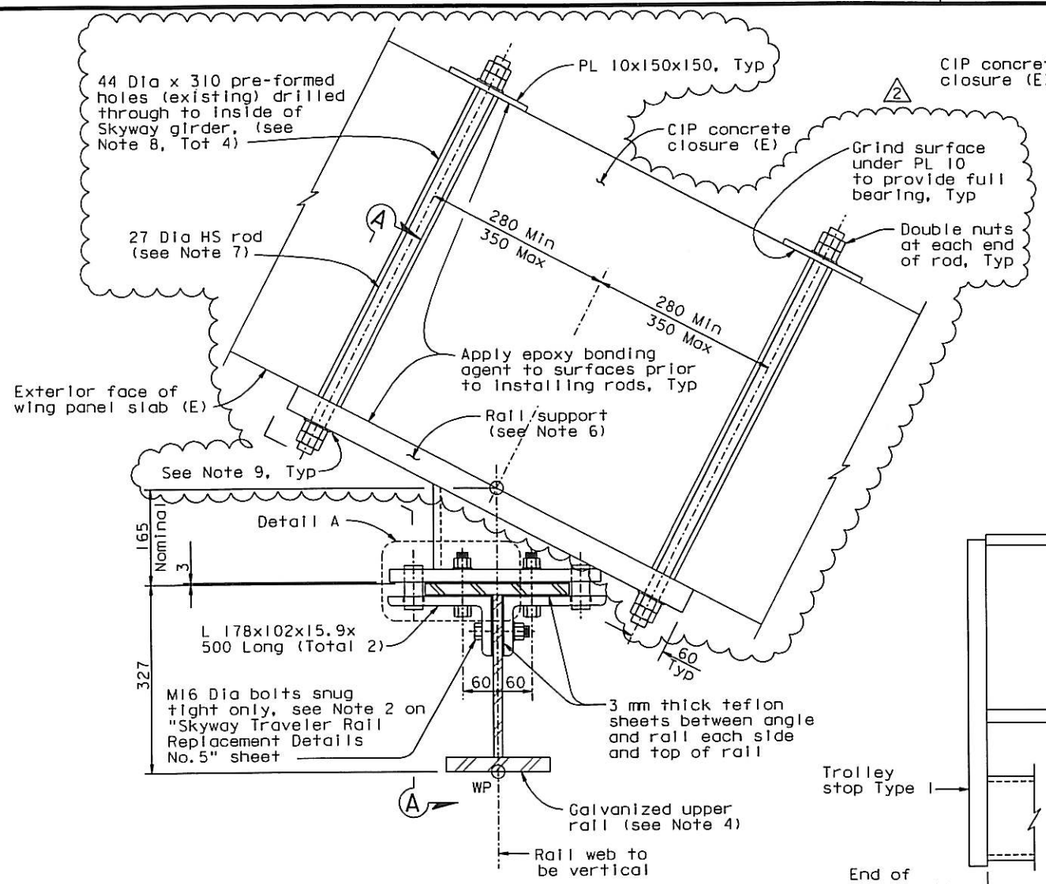

UPPER RAIL SUPPORT DETAILS AT CIP CONCRETE CLOSURE

1:5

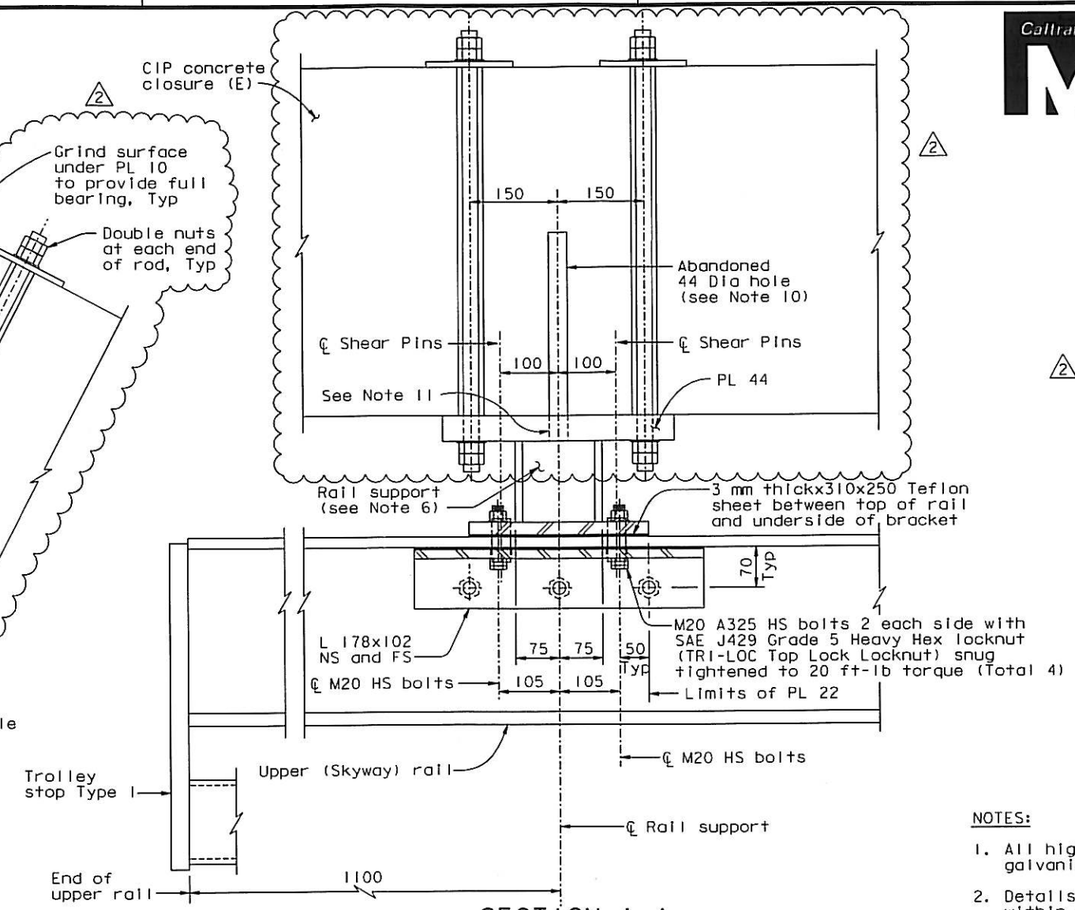

SECTION A-A

1:5

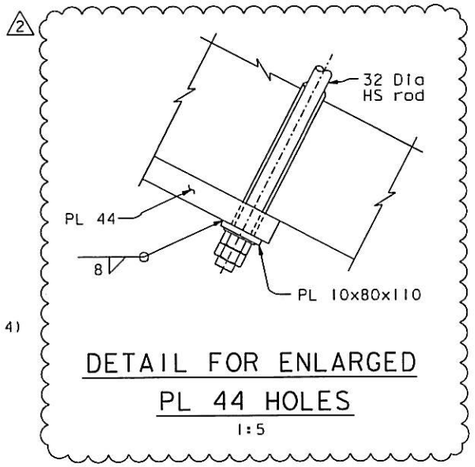

DETAIL FOR ENLARGED PL 44 HOLES

1:5

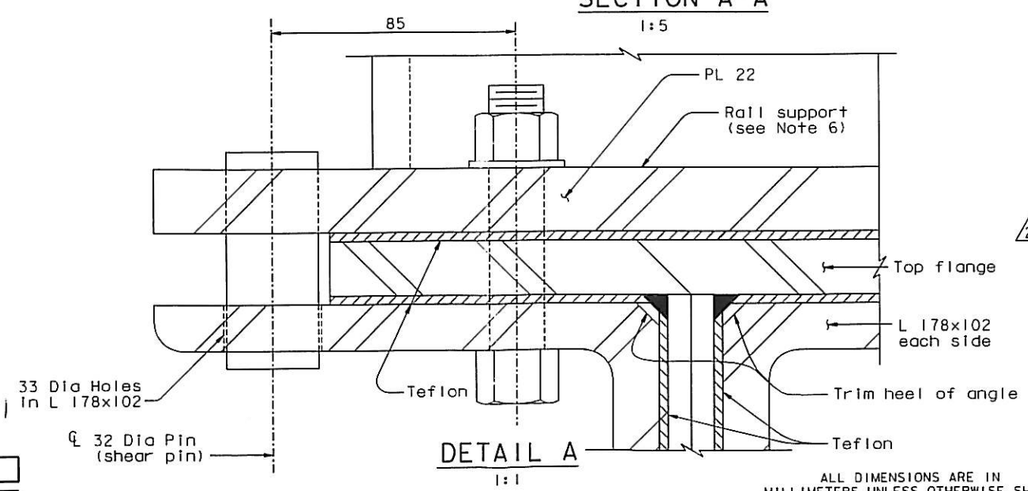

DETAIL A

1:1

ALL DIMENSIONS ARE IN MILLIMETERS UNLESS OTHERWISE SHOWN

NOTES:

1. All high strength (HS) bolts shall be A325 galvanized unless noted otherwise.
2. Details similar at all rail support locations within concrete closure.
3. For locations of upper rail work points (WP), see "Skyway Traveler Rail Replacement Details No. 1" sheet.
4. For details of rails and bolting, see "Skyway Traveler Rail Replacement Details No. 5" sheet.
5. For Trolley Stop Type 1 see "Skyway Traveler Rail Replacement Details No. 6" sheet.
6. State to furnish four (4) upper rail supports; Contractor to install.
7. At the Contractor's option, SAE Grade 5 rod may be used. Rod shall be torqued to snug + ½ turn.
8. Holes shall be filled with slow-setting methacrylate resin.
9. If 30 Dia hole in PL 44 is slotted or enlarged, use "Detail for Enlarged PL 44 Holes".
10. Hole to be patched per Caltrans Standard Specifications, using pre-approved products.
11. Abandoned holes in the steel plate shall be caulked.

REVISION 1 SUPERSEDES REVISION 0

CONTRACT CHANGE ORDER NO. 322 S1
SHEET 2 OF 2

REQUESTS FOR INFORMATION NOT ADDRESSED IN THIS CCO REMAIN IN FORCE

MARK	DATE	DESCRIPTIONS	BY	CH'D	CCO#
2	08/23/13	MODIFY TRVELER RAIL ANCHORAGE	DT	TH	322S1
1	05/18/09	TRAVELER RAIL MODIFICATIONS	TH	RM	2450
0	07/20/07	RAIL CHANGE AND MISCELLANEOUS DETAILS	TH	RM	24

REVISIONS

R. Vallizadeh/V. Toan/Y.L./W.L./F.C.
DESIGN OVERSIGHT
SIGN OF DATE 08/23/13

	BY	CHECKED
DESIGN	J. Otter	T. Ho
DETAILS	J. Otter	T. Ho
QUANTITIES	J. Otter	J. Duxbury

PREPARED FOR THE STATE OF CALIFORNIA DEPARTMENT OF TRANSPORTATION

R. Manzanarez
PROJECT ENGINEER

BRIDGE NO. 34-0006L/R
KILOMETER POST 13.2/13.9

SAN FRANCISCO OAKLAND BAY BRIDGE
EAST SPAN SEISMIC SAFETY PROJECT
SELF-ANCHORED SUSPENSION BRIDGE
(SUPERSTRUCTURE & TOWER)

SKYWAY TRAVELER RAIL REPLACEMENT DETAILS NO. 4

Rev. Date: 5-18-98

ORIGINAL SCALE IN MILLIMETERS FOR REDUCED PLANS 0 10 20 30 40 50 60 70 80 90 100

CU 04
EA 04-012021

DISREGARD PRINTS BEARING EARLIER REVISION DATES 07/20/07

REVISION DATES (PRELIMINARY STAGE ONLY)

SHEET 620S4R2 OF

FILE => L:\BB\04-012001\SAS\Contract Plans and CCO\CCO\CCO#322S1\1-Original 08-23-13\DGN\akr1d04a.dgn

USERNAME => arivera DATE PLOTTED => 23 AUG 2013 TIME PLOTTED => 14:18:40

100 % PS&E