DIST.	COUNTY	ROUTE	KILOMETER POST TOTAL PROJECT	SHEET NO.	TOTAL SHEETS
04	SF	80	13.2/13.9	888S11R2	1204

REGISTERED ENGINEER - CIVIL

06-11-13
PLANS APPROVAL DATE

REGISTERED PROFESSIONAL ENGINEER Marwan N. Nader No. C 054426 Exp. 12/31/13 CIVIL STATE OF CALIFORNIA

The State of California or its officers or agents shall not be responsible for the accuracy or completeness of electronic copies of this plan sheet.

T.Y. LIN / MOFFATT & NICHOL
825 BATTERY STREET
SAN FRANCISCO, CA 94111

Caltrans now has a web site! To get to the web site, go to: http://www.dot.ca.gov

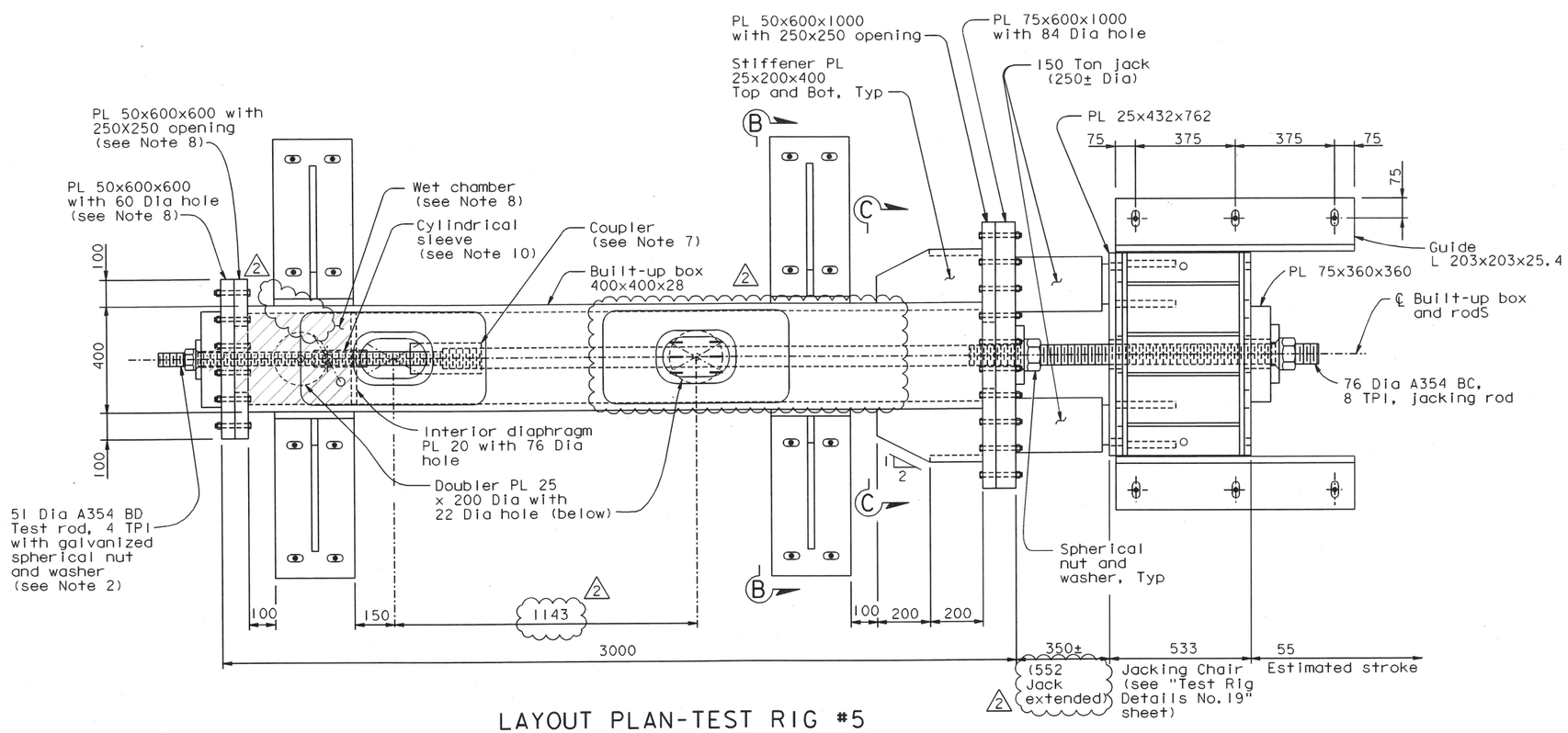

LAYOUT PLAN-TEST RIG #5

1:10

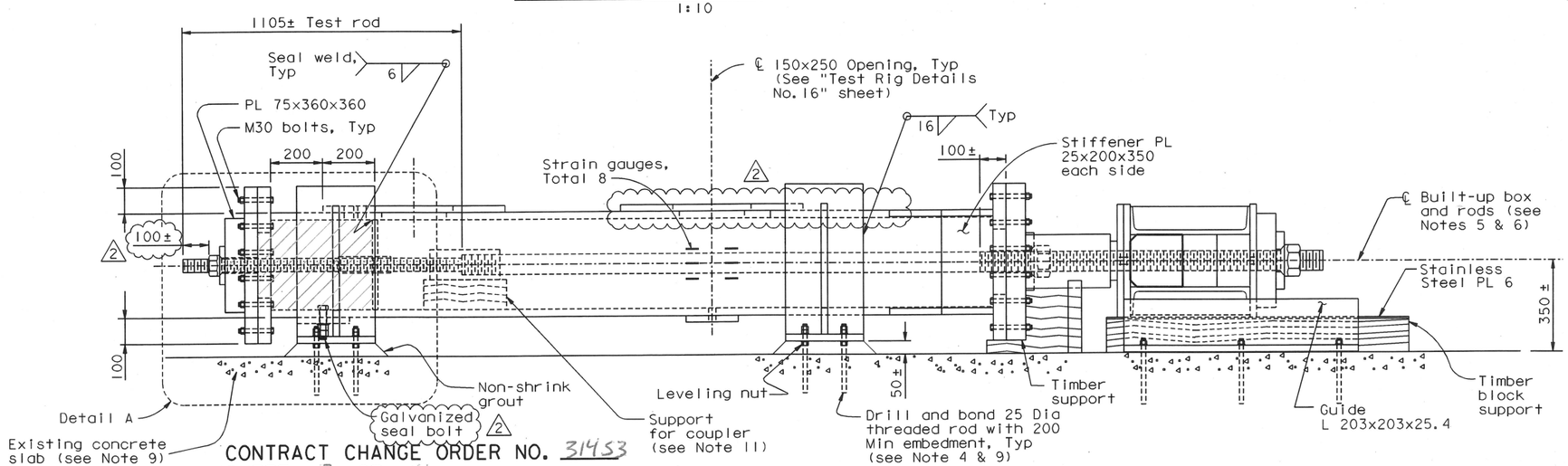

ELEVATION

1:10

NOTES:

1. For Detail A, Section B-B, and Section C-C, see "Test Rig Details No.15" sheet.
2. Minimum of 75 mm of threads of the rod shall be submerged in the NaCl solution at the start of the test.
3. Built-up box 400x400x28 shall be used.
4. The drill and bond 25 Dia threaded rods shall have minimum allowable strength of 45 kN in tension and 30 kN in shear per threaded rod. Provide double nuts. Tighten per manufacturer's recomendation at the dead end and snug-tight against steel plates at the jacking end. (2)
5. Test assembly shall be placed level.
6. CL of built-up box and rods shall be aligned to within 4 mm.
7. For coupler detail, see "Test Rig Details No.16" sheet.
8. All interior wetted surfaces of wet chambers, including inside of holes, shall be painted with two coats of epoxy based system or equivalent. Surface preparation and application procedure shall be per manufacturers' recommendations.
9. Existing concrete shall be 300 thick and shall have minimum strength of 14 MPa, confirm by testing of corings. In the event that foundation thickness or strength cannot be confirmed, reinforced concrete slab foundation shall be provided as shown on "Test Rig Details No.21" sheet.
10. For cylindrical sleeve detail, see "Test Rig Details No.16" sheet. Cylindrical sleeve shall be painted with two coats of epoxy based system or equivalent. Surface preparation and application procedure shall be per manufacturers' recommendations.
11. Contractor to propose material for Engineer's review and approval. Material shall be non-metallic and non-expanding in contact with water.

CONTRACT CHANGE ORDER NO. 314S3
SHEET 2 OF 14

REQUESTS FOR INFORMATION NOT ADDRESSED IN THIS CCO REMAIN IN FORCE

MARK	DATE	DESCRIPTIONS	BY	CH'D	CCO#
2	10/10/13	PIER E2 ROD TESTING	CC	MN	314S3
1	08/01/13	REMOVE AND TEST SAMPLE RODS	CC	MN	314S2
0	06/11/13	REMOVE, REPLACE, AND TEST SAMPLE RODS	CC	MN	314S1

REVISIONS

A. Akinsanya / W. Long
DESIGN OVERSIGHT
SIGN OFF DATE 10/10/13

Rev. Date: 5-22-13

DESIGN	BY C. Choi	CHECKED N. Vo	
DETAILS	BY G. Mok	CHECKED J. Denis	
QUANTITIES	BY G. Mok	CHECKED J. Denis	

PREPARED FOR THE STATE OF CALIFORNIA DEPARTMENT OF TRANSPORTATION

ALL DIMENSIONS ARE IN MILLIMETERS UNLESS OTHERWISE SHOWN

M. Nader
PROJECT ENGINEER

BRIDGE NO. 34-0006L/R
KILOMETER POST 13.2/13.9

SAN FRANCISCO OAKLAND BAY BRIDGE
EAST SPAN SEISMIC SAFETY PROJECT
SELF-ANCHORED SUSPENSION BRIDGE
(SUPERSTRUCTURE & TOWER)

TEST RIG DETAILS NO. 11

ORIGINAL SCALE IN MILLIMETERS FOR REDUCED PLANS 0 10 20 30 40 50 60 70 80 90 100

CU 04
EA 0120F1

DISREGARD PRINTS BEARING EARLIER REVISION DATES 06/11/13

REVISION DATES (PRELIMINARY STAGE ONLY)

SHEET 471S11R2 OF

FILE => L:\BB\04-012001\SAS\Contract Plans and CCO\CCO\CCO#314S3\1-Original 10-10-13\DGN\aksrr11.dgn

USERNAME => DWinrow DATE PLOTTED => 10 OCT 2013 TIME PLOTTED => 10:36:48

100 % PS&E

DIST.	COUNTY	ROUTE	KILOMETER POST TOTAL PROJECT	SHEET NO.	TOTAL SHEETS
04	SF	80	13.2/13.9	888S12R2	1204

REGISTERED ENGINEER - CIVIL

06-11-13
PLANS APPROVAL DATE

REGISTERED PROFESSIONAL ENGINEER Marwan N. Nader No. C 054426 Exp. 12/31/13 CIVIL STATE OF CALIFORNIA

The State of California or its officers or agents shall not be responsible for the accuracy or completeness of electronic copies of this plan sheet.

T.Y. LIN / MOFFATT & NICHOL
825 BATTERY STREET
SAN FRANCISCO, CA 94111

Caltrans now has a web site! To get to the web site, go to: http://www.dot.ca.gov

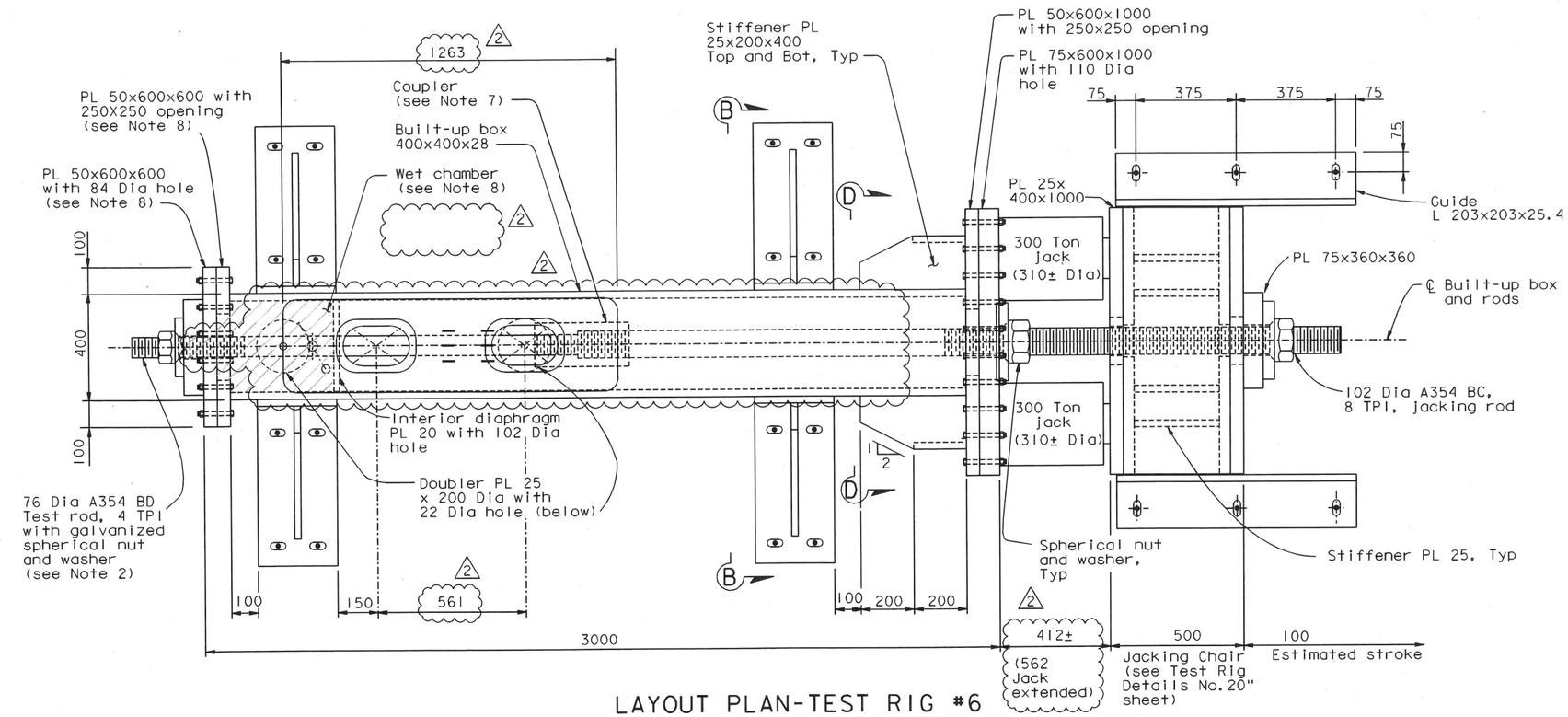

LAYOUT PLAN-TEST RIG #6

1:10

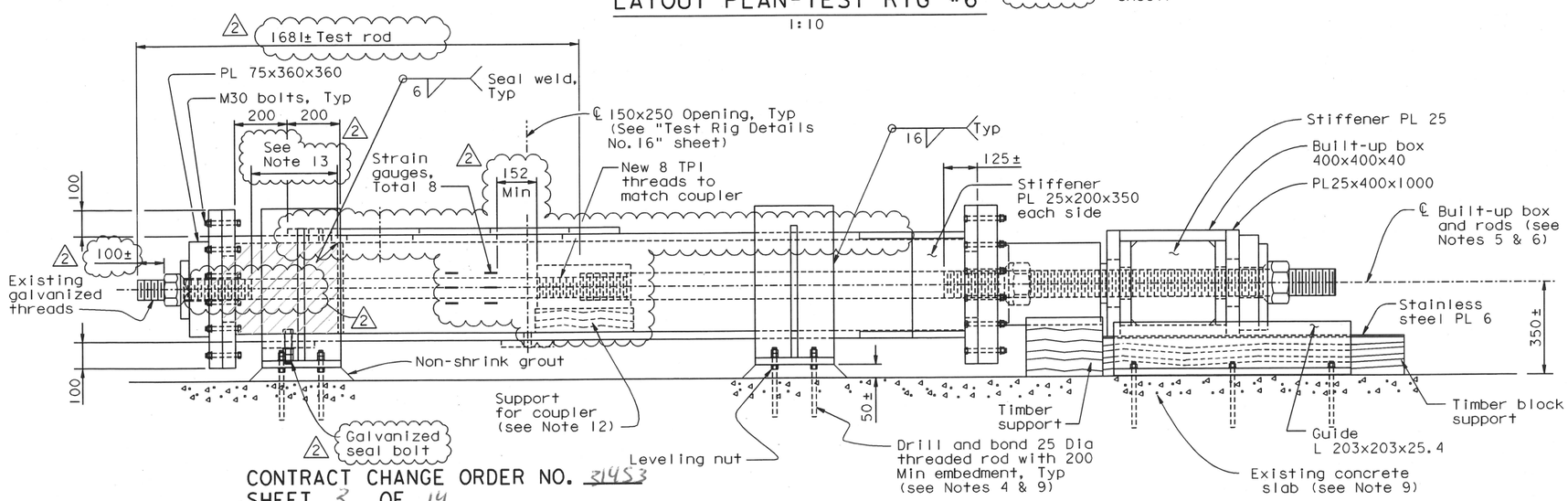

ELEVATION

1:10

NOTES:

1. For Detail A and Section B-B, see "Test Rig Details No. 15" sheet. For Section D-D, see "Test Rig Details No. 18" sheet. End of threads shall be 75mm min clr from the face of interior diaphragm.
2. Minimum of 75 mm of threads of the rod shall be submerged in the NaCl solution at the start of the test.
3. Built-up box 400x400x28 shall be used.
4. The drill and bond 25 Dia threaded rods shall have minimum allowable strength of 45 kN in tension and 30 kN in shear per threaded rod. Provide double nuts. Tighten per manufacturer's recommendation at the dead end and snug-tight against steel plates at the jacking end. (2)
5. Test assembly shall be placed level.
6. CL of built-up box and rods shall be aligned to within 4 mm.
7. For coupler detail, see "Test Rig Details No. 16" sheet.
8. All interior wetted surfaces of wet chambers, including inside of holes, shall be painted with two coats of epoxy based system or equivalent. Surface preparation and application procedure shall be per manufacturers' recommendations.
9. Existing concrete shall be 300 thick and shall have minimum strength of 14 MPa, confirm by testing of corings. In the event that foundation thickness or strength cannot be confirmed, reinforced concrete slab foundation shall be provided as shown on "Test Rig Details No. 21" sheet.
10. Note Deleted. (2)
11. Note Deleted.
12. Contractor to propose material for Engineer's review and approval. Material shall be non-metallic and non-expanding in contact with water.
13. End of threads shall be 200 Min Clr from the face of interior diaphragm. (2)

CONTRACT CHANGE ORDER NO. 31453
SHEET 3 OF 14

REQUESTS FOR INFORMATION NOT ADDRESSED IN THIS CCO REMAIN IN FORCE

MARK	DATE	DESCRIPTIONS	BY	CH'D	CCO#
2	10/10/13	PIER E2 ROD TESTING	CC	MN	31453
1	08/01/13	REMOVE AND TEST SAMPLE RODS	CC	MN	31452
0	06/11/13	REMOVE, REPLACE, AND TEST SAMPLE RODS	CC	MN	31451

REVISIONS

A. Akinsanya / W. Long
DESIGN OVERSIGHT
SIGN OFF DATE 10/10/13

Rev. Date: 5-22-13

	BY	CHECKED	
DESIGN	C. Choi	N. Vo	
DETAILS	G. Mok	J. Denis	
QUANTITIES	G. Mok	J. Denis	

PREPARED FOR THE STATE OF CALIFORNIA DEPARTMENT OF TRANSPORTATION

ALL DIMENSIONS ARE IN MILLIMETERS UNLESS OTHERWISE SHOWN

M. Nader
PROJECT ENGINEER

BRIDGE NO. 34-0006L/R
KILOMETER POST 13.2/13.9

SAN FRANCISCO OAKLAND BAY BRIDGE
EAST SPAN SEISMIC SAFETY PROJECT
SELF-ANCHORED SUSPENSION BRIDGE
(SUPERSTRUCTURE & TOWER)

TEST RIG DETAILS NO. 12

ORIGINAL SCALE IN MILLIMETERS FOR REDUCED PLANS 0 10 20 30 40 50 60 70 80 90 100

CU 04
EA 0120F1

DISREGARD PRINTS BEARING EARLIER REVISION DATES 06/11/13

REVISION DATES (PRELIMINARY STAGE ONLY)

SHEET 471S12R2 OF

FILE => I:\bb\04-01200I\sas\contract plans and cco\cco\cco*31453\I-original 10-10-13\dgn\aksrr12.dgn

100 % PS&E

USERNAME => DWinrow DATE PLOTTED => 10 OCT 2013 TIME PLOTTED => 10:45:27

DIST.	COUNTY	ROUTE	KILOMETER POST TOTAL PROJECT	SHEET NO.	TOTAL SHEETS
04	SF	80	13.2/13.9	888S13R2	1204

REGISTERED ENGINEER - CIVIL

06-11-13
PLANS APPROVAL DATE

REGISTERED PROFESSIONAL ENGINEER Marwan N. Nader No. C 054426 Exp. 12/31/13 CIVIL STATE OF CALIFORNIA

The State of California or its officers or agents shall not be responsible for the accuracy or completeness of electronic copies of this plan sheet.

T.Y. LIN / MOFFATT & NICHOL
825 BATTERY STREET
SAN FRANCISCO, CA 94111

Caltrans now has a web site! To get to the web site, go to: http://www.dot.ca.gov

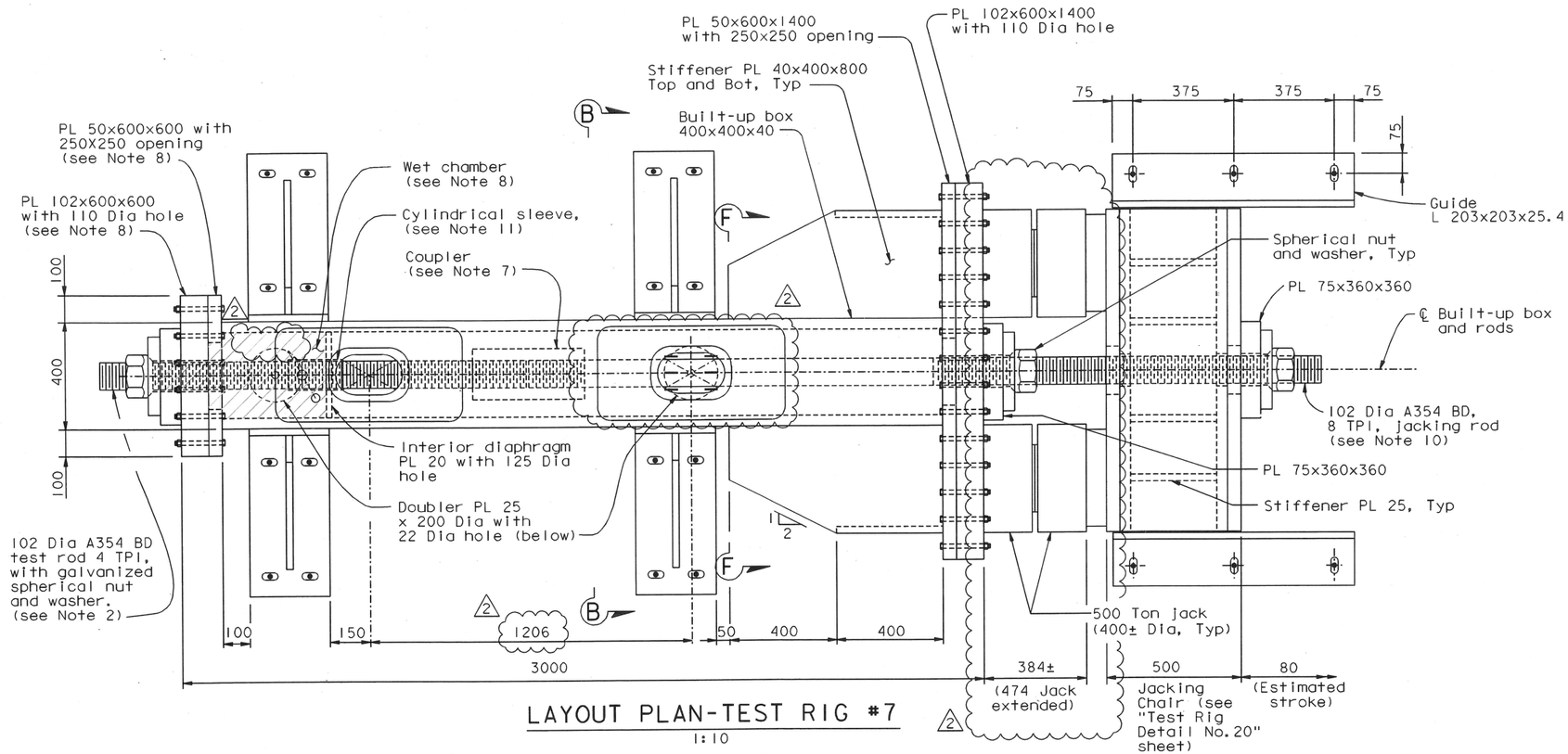

LAYOUT PLAN-TEST RIG #7
1:10

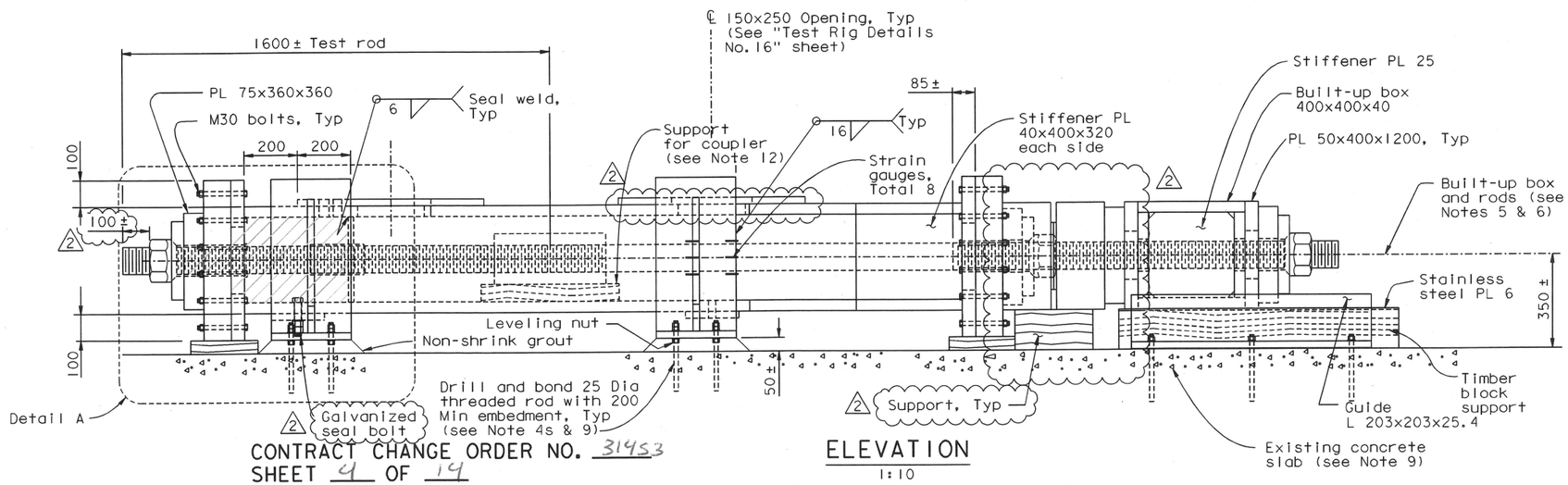

ELEVATION
1:10

NOTES:

1. For Detail A and Section B-B, see "Test Rig Details No. 15" sheet. For Section F-F, see "Test Rig Details No. 18" sheet.
2. Minimum of 75 mm of threads of the rod shall be submerged in the NaCl solution at the start of the test.
3. Built-up box 400x400x40 shall be used.
4. The drill and bond 25 Dia threaded rods shall have minimum allowable strength of 45 kN in tension and 30 kN in shear per threaded rod. Provide double nuts. Tighten per manufacturer's recommendation at the dead end and snug-tight against steel plates at the jacking end. 2
5. Test assembly shall be placed level.
6. CL of built-up box and rods shall be aligned to within 4 mm.
7. For coupler detail, see "Test Rig Details No. 16" sheet.
8. All interior wetted surfaces of wet chambers, including inside of holes, shall be painted with two coats of epoxy based system or equivalent. Surface preparation and application procedure shall be per manufacturers' recommendations.
9. Existing concrete shall be 300 thick and shall have minimum strength of 14 MPa, confirm by testing of corings. In the event that foundation thickness or strength cannot be confirmed, reinforced concrete slab foundation shall be provided as shown on "Test Rig Details No. 21" sheet.
10. Provide mill certificate showing Fy of Jacking rod to be greater than 973 MPa (141 ksi). 2
11. For cylindrical sleeve details, see "Test Rig Details No. 16" sheet. Cylindrical sleeve shall be painted with two coats of epoxy based system or equivalent. Surface preparation and application procedure shall be per manufacturers' recommendations.
12. Contractor to propose material for Engineer's review and approval. Material shall be non-metallic and non-expanding in contact with water.

CONTRACT CHANGE ORDER NO. 314S3
SHEET 4 OF 14

REQUESTS FOR INFORMATION NOT ADDRESSED IN THIS CCO REMAIN IN FORCE

MARK	DATE	DESCRIPTIONS	BY	CH'D	CCO#
2	10/10/13	PIER E2 ROD TESTING	CC	MN	314S3
1	08/01/13	REMOVE AND TEST SAMPLE RODS	CC	MN	314S2
0	06/11/13	REMOVE, REPLACE, AND TEST SAMPLE RODS	CC	MN	314S1

REVISIONS

A. Akinsanya / W. Long
DESIGN OVERSIGHT
SIGN OFF DATE 10/10/13

Rev. Date: 5-22-13

	BY	CHECKED
DESIGN	C. Choi	N. Vo
DETAILS	G. Mok	J. Denis
QUANTITIES	G. Mok	J. Denis

PREPARED FOR THE STATE OF CALIFORNIA DEPARTMENT OF TRANSPORTATION

ALL DIMENSIONS ARE IN MILLIMETERS UNLESS OTHERWISE SHOWN

M. Nader
PROJECT ENGINEER

BRIDGE NO. 34-0006L/R
KILOMETER POST 13.2/13.9

SAN FRANCISCO OAKLAND BAY BRIDGE
EAST SPAN SEISMIC SAFETY PROJECT
SELF-ANCHORED SUSPENSION BRIDGE
(SUPERSTRUCTURE & TOWER)

TEST RIG DETAILS NO. 13

ORIGINAL SCALE IN MILLIMETERS FOR REDUCED PLANS 0 10 20 30 40 50 60 70 80 90 100

CU 04
EA 0120F1

DISREGARD PRINTS BEARING EARLIER REVISION DATES

REVISION DATES (PRELIMINARY STAGE ONLY) 06/11/13

SHEET 471S13R2 OF

FILE => I:\bb\04-01200I\sas\contract plans and cco\cco\cco#314s3\1-original 10-10-13\dgn\aksrr13.dgn

USERNAME => DWinrow DATE PLOTTED => 10 OCT 2013 TIME PLOTTED => 10:50:31

100 % PS&E

DIST.	COUNTY	ROUTE	KILOMETER POST TOTAL PROJECT	SHEET NO.	TOTAL SHEETS
04	SF	80	13.2/13.9	888S14R2	1204

REGISTERED ENGINEER - CIVIL

06-11-13
PLANS APPROVAL DATE

REGISTERED PROFESSIONAL ENGINEER Marwan N. Nader No. C 054426 Exp. 12/31/13 CIVIL STATE OF CALIFORNIA

The State of California or its officers or agents shall not be responsible for the accuracy or completeness of electronic copies of this plan sheet.

T.Y. LIN / MOFFATT & NICHOL
825 BATTERY STREET
SAN FRANCISCO, CA 94111

Caltrans now has a web site! To get to the web site, go to: http://www.dot.ca.gov

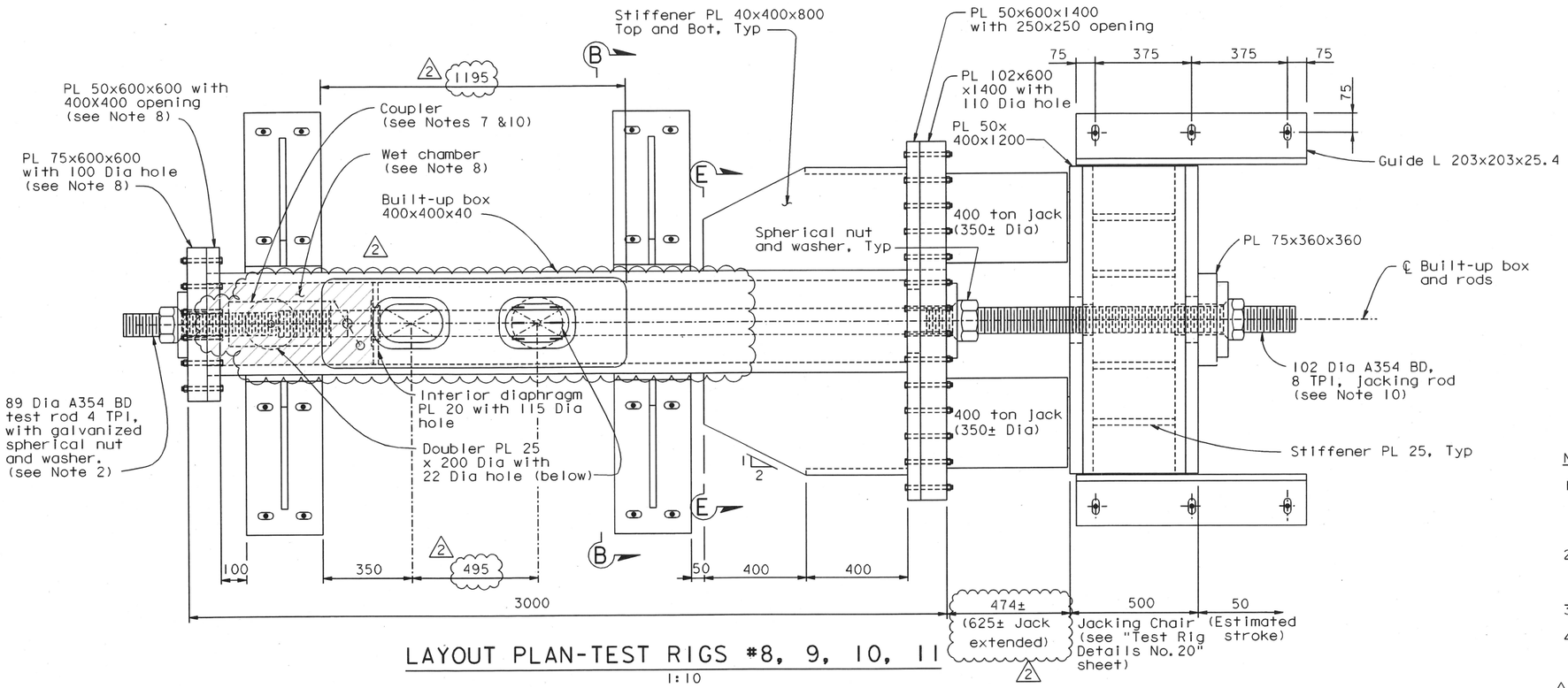

LAYOUT PLAN-TEST RIGS #8, 9, 10, 11
1:10

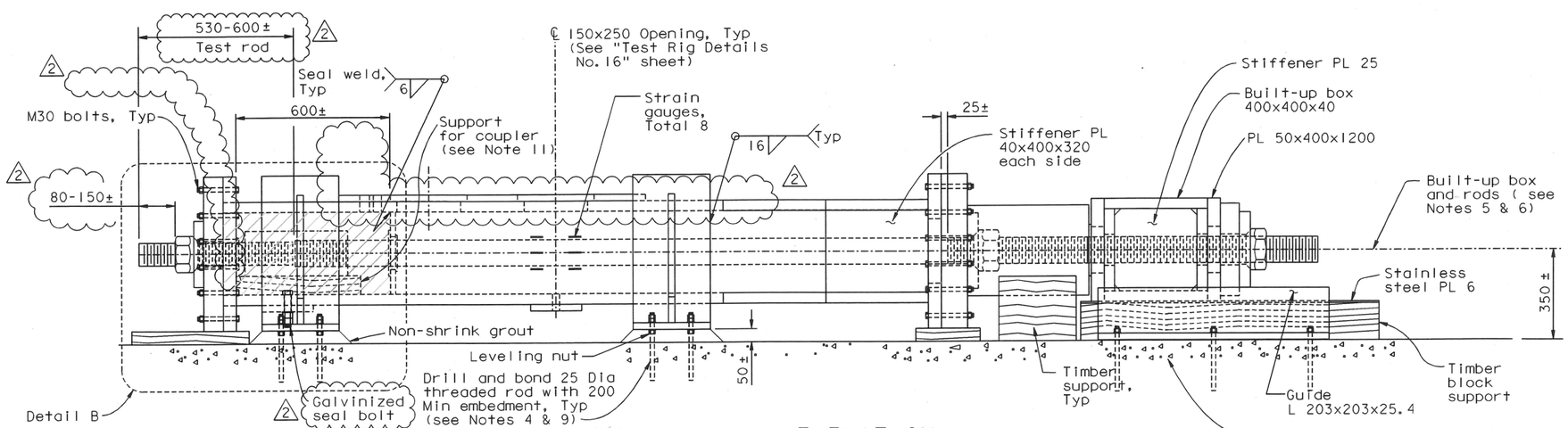

ELEVATION
1:10

NOTES:

1. For Section B-B, see "Test Rig Details No.15" sheet. For Detail B, see "Test Rig Details No. 17" sheet. For "Section E-E, see "Test Rig Details No.18" sheet.
2. Minimum of 75 mm of threads of the rod shall be submerged in the NaCl solution at the start of the test.
3. Built-up box 400x400x40 shall be used.
4. The drill and bond 25 Dia threaded rods shall have minimum allowable strength of 45 kN in tension and 30 kN in shear per threaded rod. Provide double nuts. Tighten per manufacturer's recommendation at the dead end and snug-tight against steel plates at the jacking end. (2)
5. Test assembly shall be placed level.
6. CL of built-up box and rods shall be aligned to within 4 mm.
7. For coupler detail, see "Test Rig Details No.16" sheet.
8. All interior wetted surfaces of wet chambers, including inside of holes, shall be painted with two coats of epoxy based system or equivalent. Surface preparation and application procedure shall be per manufacturers' recommendations.
9. Existing concrete shall be 300 thick and shall have minimum strength of 14 MPa, confirm by testing of corings. In the event that foundation thickness or strength cannot be confirmed, reinforced concrete slab foundation shall be provided as shown on "Test Rig Details No.21" sheet.
10. Coupler and portion of jacking rod submerged in NaCl solution shall be painted with two coats of epoxy based system or equivalent. Surface preparation and application procedure shall be per manufacturers' recommendations.
11. Contractor to propose material for Engineer's review and approval. Material shall be non-metallic and non-expanding in contact with water.

CONTRACT CHANGE ORDER NO. 314S3
SHEET 5 OF 14

REQUESTS FOR INFORMATION NOT ADDRESSED IN THIS CCO REMAIN IN FORCE

MARK	DATE	DESCRIPTIONS	BY	CH'D	CCO#
2	10/10/13	PIER E2 ROD TESTING	CC	MN	314S3
1	08/01/13	REMOVE AND TEST SAMPLE RODS	CC	MN	314S2
0	06/11/13	REMOVE, REPLACE, AND TEST SAMPLE RODS	CC	MN	314S1

REVISIONS

A. Akinsanya / W. Long
DESIGN OVERSIGHT
SIGN OFF DATE 10/10/13

Rev. Date: 5-22-13

	BY		CHECKED	
DESIGN	BY	C. Choi	CHECKED	N. Vo
DETAILS	BY	G. Mok	CHECKED	J. Denis
QUANTITIES	BY	G. Mok	CHECKED	J. Denis

PREPARED FOR THE STATE OF CALIFORNIA DEPARTMENT OF TRANSPORTATION

ALL DIMENSIONS ARE IN MILLIMETERS UNLESS OTHERWISE SHOWN

M. Nader
PROJECT ENGINEER

BRIDGE NO. 34-0006L/R
KILOMETER POST 13.2/13.9

CU 04
EA 0120F1

ORIGINAL SCALE IN MILLIMETERS FOR REDUCED PLANS 0 10 20 30 40 50 60 70 80 90 100

DISREGARD PRINTS BEARING EARLIER REVISION DATES 06/11/13

SAN FRANCISCO OAKLAND BAY BRIDGE
EAST SPAN SEISMIC SAFETY PROJECT
SELF-ANCHORED SUSPENSION BRIDGE
(SUPERSTRUCTURE & TOWER)

TEST RIG DETAILS NO. 14

SHEET 471S14R2 OF

FILE => I:\bb\04-012001\sas\contract plans and cco\cco\cco#314s3\1-original 10-10-13\dgn\aksrr14.dgn

100 % PS&E

USERNAME => DWinrow DATE PLOTTED => 10 OCT 2013 TIME PLOTTED => 10:58:23

DIST.	COUNTY	ROUTE	KILOMETER POST TOTAL PROJECT	SHEET NO.	TOTAL SHEETS
04	SF	80	13.2/13.9	888S15R1	1204

Caltrans Metric

REGISTERED ENGINEER - CIVIL

06-11-13

PLANS APPROVAL DATE

REGISTERED PROFESSIONAL ENGINEER Marwan N. Nader No. C 054426 Exp. 12/31/13 CIVIL STATE OF CALIFORNIA

The State of California or its officers or agents shall not be responsible for the accuracy or completeness of electronic copies of this plan sheet.

T.Y. LIN / MOFFATT & NICHOL
825 BATTERY STREET
SAN FRANCISCO, CA 94111

Caltrans now has a web site! To get to the web site, go to: http://www.dot.ca.gov

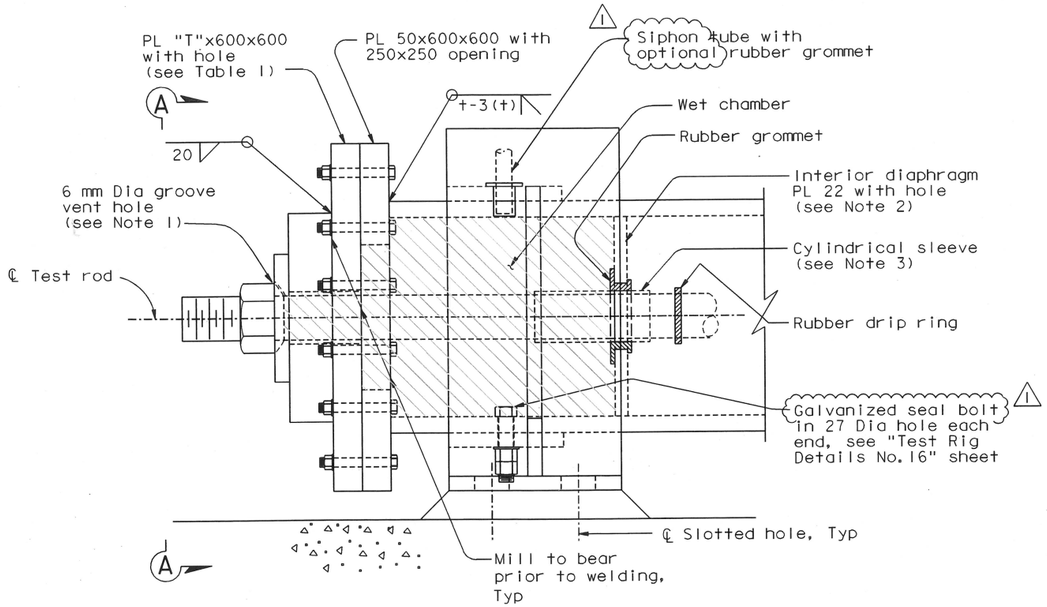

DETAIL A

1:5

(Test Rig #5 shown, other similar)

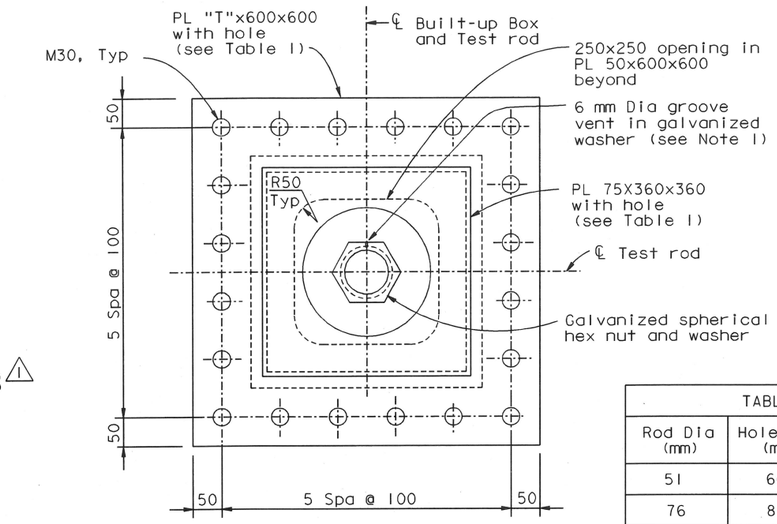

SECTION A-A

1:5

NOTES:

1. For detail of groove vent, see "Test Rig Details No. 16" sheet.
2. At the Contractor's option, hole may be made larger to facilitate test rod and match rubber grommet installation.
3. For detail of cylindrical sleeve, see "Test Rig Details No. 16" sheet.

TABLE 1		
Rod Dia (mm)	Hole Dia (mm)	"T" (mm)
51	60	50
76	84	50
102	110	102

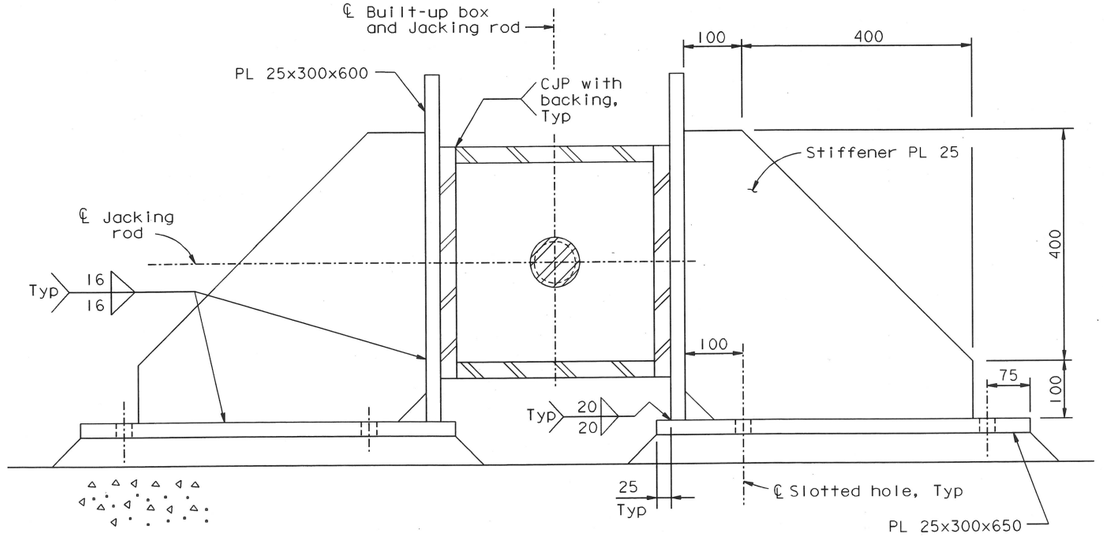

SECTION B-B

1:5

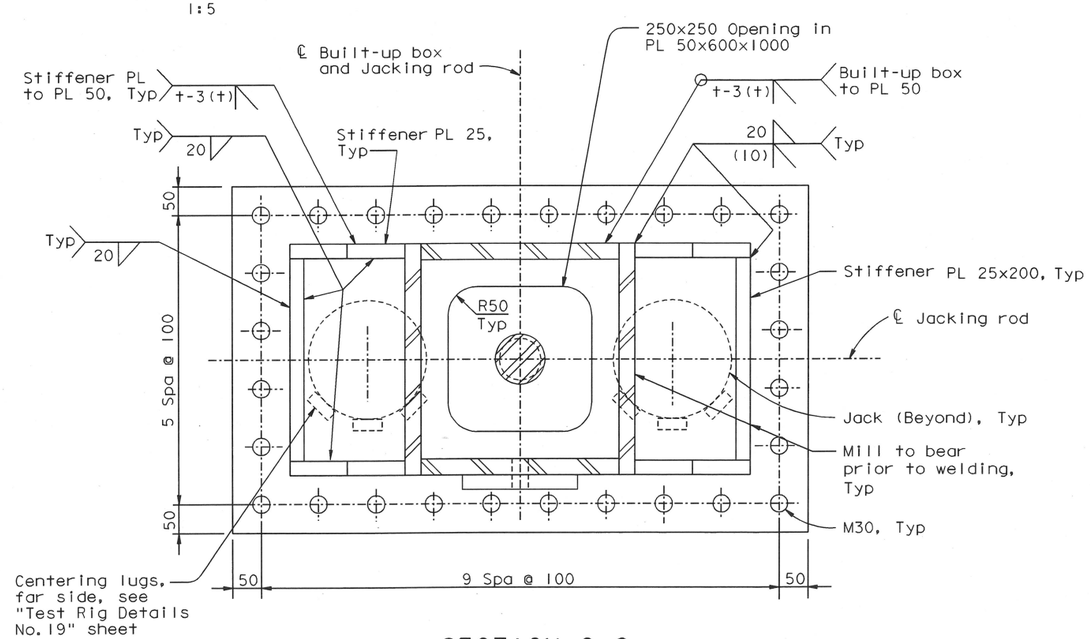

SECTION C-C

1:5

CONTRACT CHANGE ORDER NO. 314S3
SHEET 16 OF 14

REQUESTS FOR INFORMATION NOT ADDRESSED IN THIS CCO REMAIN IN FORCE

ALL DIMENSIONS ARE IN MILLIMETERS UNLESS OTHERWISE SHOWN

A. Akinsanya / W. Long
DESIGN OVERSIGHT
SIGN OFF DATE 10/10/13

MARK	DATE	DESCRIPTIONS	BY	CH'D	CCO#
1	10/10/13	PIER E2 ROD TESTING	CC	MN	314S3
0	06/11/13	REMOVE, REPLACE, AND TEST SAMPLE RODS	CC	MN	314S1

REVISIONS

	BY		CHECKED	
DESIGN	BY	C. Choi	CHECKED	N. Vo
DETAILS	BY	G. Mok	CHECKED	J. Denis
QUANTITIES	BY	G. Mok	CHECKED	J. Denis

PREPARED FOR THE STATE OF CALIFORNIA DEPARTMENT OF TRANSPORTATION

M. Nader
PROJECT ENGINEER

BRIDGE NO. 34-0006L/R
KILOMETER POST 13.2/13.9

SAN FRANCISCO OAKLAND BAY BRIDGE
EAST SPAN SEISMIC SAFETY PROJECT
SELF-ANCHORED SUSPENSION BRIDGE
(SUPERSTRUCTURE & TOWER)

TEST RIG DETAILS NO. 15

Rev. Date: 5-18-98

ORIGINAL SCALE IN MILLIMETERS FOR REDUCED PLANS 0 10 20 30 40 50 60 70 80 90 100

CU 04
EA 0120F1

DISREGARD PRINTS BEARING EARLIER REVISION DATES 06/11/13

REVISION DATES (PRELIMINARY STAGE ONLY)

SHEET 471S15R1 OF

FILE => I:\bb\04-01200I\sas\contract plans and cco\cco\cco#314s3\I-original 10-10-13\dgn\aksrr15.dgn

100 % PS&E

USERNAME => DWinrow DATE PLOTTED => 10 OCT 2013 TIME PLOTTED => 11:00:06

DIST.	COUNTY	ROUTE	KILOMETER POST TOTAL PROJECT	SHEET NO.	TOTAL SHEETS
04	SF	80	13.2/13.9	888S16R2	1204

REGISTERED ENGINEER - CIVIL

06-11-13
PLANS APPROVAL DATE

REGISTERED PROFESSIONAL ENGINEER Marwan N. Nader No. C 054426 Exp. 12/31/13 CIVIL STATE OF CALIFORNIA

The State of California or its officers or agents shall not be responsible for the accuracy or completeness of electronic copies of this plan sheet.

T.Y. LIN / MOFFATT & NICHOL
825 BATTERY STREET
SAN FRANCISCO, CA 94111

Caltrans now has a web site! To get to the web site, go to: http://www.dot.ca.gov

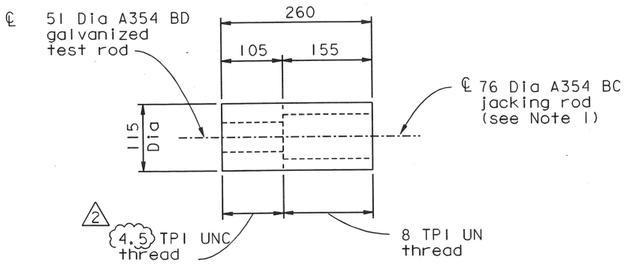

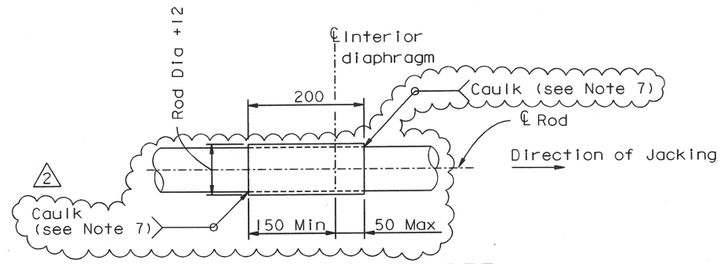

CYLINDRICAL SLEEVE DETAIL (See Notes 4 & 5)

1:5

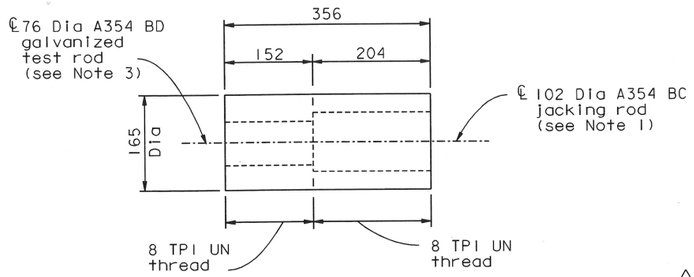

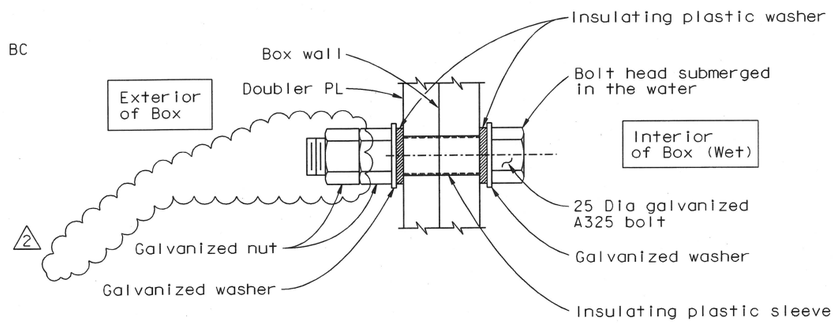

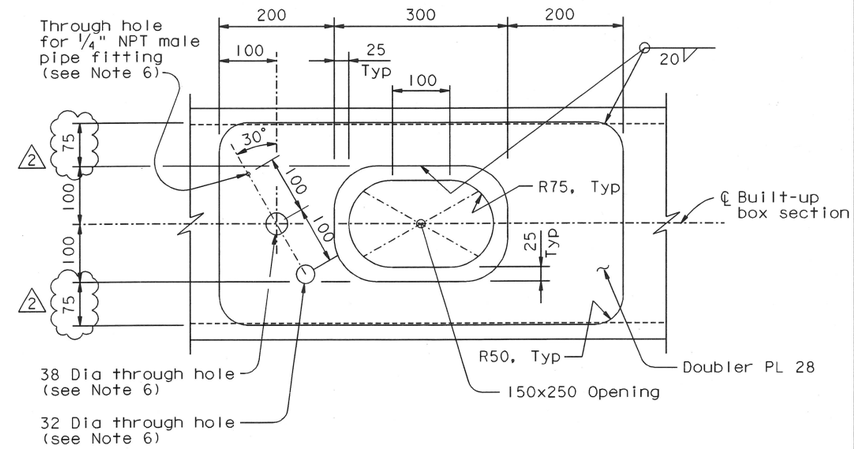

OPENING AND DOUBLER DETAIL

1:5

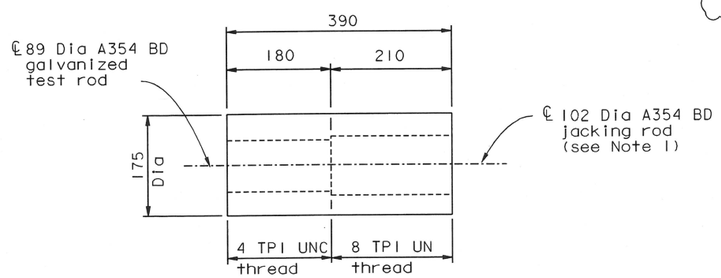

2 GALVANIZED SEAL BOLT DETAIL

1:2

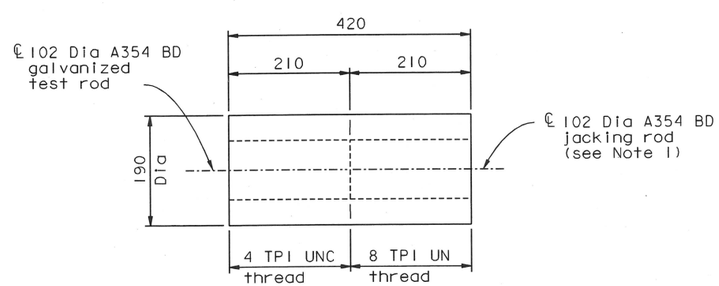

COUPLER DETAILS

1:5

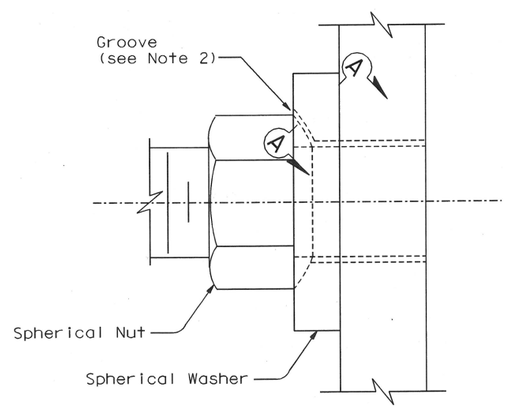

GROOVE DETAIL

1:2

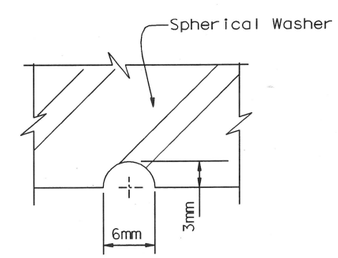

SECTION A-A

NTS

NOTES:

1. Coupler and jacking rod shall be fabricated from AISI 4340 materials, with mechanical properties conforming to ASTM A354 BC, (UNO.) Tapping of the coupler threads shall account for the thickness of galvanizing on the test rods. 2
2. Groove shall be used to confirm an outflow of NaCl solution through the threads. Upon confirmation, seal groove with closed cell backer rod, plumber putty or similar material.
3. New threads at this end of test rod shall not be galvanized.
4. Cylindrical sleeve shall be fabricated from AISI 1010 material. Inside of sleeve shall be tapped to be compatible with the threaded rod. 2
5. Apply (Rectorseal No.5 thread sealant) or equivalent to seal threads against leaks. Submit product (data sheet) for review and approval by the Engineer. 2
6. Holes required at wet chambers only. For locations, see "Test Rig Details No.11 thru No.14" sheets.
7. 2 Apply and tool Sikaflex 1A or equivalent all around to seal threads prior to painting. Submit product data sheet for review and approval by the Engineer.

CONTRACT CHANGE ORDER NO. 314S3
SHEET 7 OF 14

REQUESTS FOR INFORMATION NOT ADDRESSED IN THIS CCO REMAIN IN FORCE

MARK	DATE	DESCRIPTIONS	BY	CH'D	CCO#
2	10/10/13	PIER E2 ROD TESTING	CC	MN	314S3
1	08/01/13	REMOVE AND TEST SAMPLE RODS	CC	MN	314S2
0	06/11/13	REMOVE, REPLACE, AND TEST SAMPLE RODS	CC	MN	314S1

REVISIONS

A. Akinsanya / W. Long
DESIGN OVERSIGHT
SIGN OFF DATE 10/10/13

Rev. Date: 5-22-13

DESIGN	BY C. Choi	CHECKED N. Vo	
DETAILS	BY G. Mok	CHECKED J. Denis	
QUANTITIES	BY G. Mok	CHECKED J. Denis	

PREPARED FOR THE STATE OF CALIFORNIA DEPARTMENT OF TRANSPORTATION

ALL DIMENSIONS ARE IN MILLIMETERS UNLESS OTHERWISE SHOWN

M. Nader
PROJECT ENGINEER

BRIDGE NO. 34-0006L/R
KILOMETER POST 13.2/13.9

SAN FRANCISCO OAKLAND BAY BRIDGE
EAST SPAN SEISMIC SAFETY PROJECT
SELF-ANCHORED SUSPENSION BRIDGE
(SUPERSTRUCTURE & TOWER)

TEST RIG DETAILS NO. 16

ORIGINAL SCALE IN MILLIMETERS FOR REDUCED PLANS 0 10 20 30 40 50 60 70 80 90 100

CU 04
EA 0120F1

DISREGARD PRINTS BEARING EARLIER REVISION DATES 06/11/13

REVISION DATES (PRELIMINARY STAGE ONLY)

SHEET 471S16R2 OF

FILE => I:\bb\04-012001\sas\contract plans and cco\cco\cco#314s3\1-original 10-10-13\dgn\aksrr16.dgn

100 % PS&E

USERNAME => DWinrow DATE PLOTTED => 10 OCT 2013 TIME PLOTTED => 11:02:42

DIST.	COUNTY	ROUTE	KILOMETER POST TOTAL PROJECT	SHEET NO.	TOTAL SHEETS
04	SF	80	13.2/13.9	888S17R1	1204

REGISTERED ENGINEER - CIVIL

06-11-13
PLANS APPROVAL DATE

The State of California or its officers or agents shall not be responsible for the accuracy or completeness of electronic copies of this plan sheet.

REGISTERED PROFESSIONAL ENGINEER Marwan N. Nader No. C 054426 Exp. 12/31/13 CIVIL STATE OF CALIFORNIA

T.Y. LIN / MOFFATT & NICHOL
825 BATTERY STREET
SAN FRANCISCO, CA 94111

Caltrans now has a web site! To get to the web site, go to: http://www.dot.ca.gov

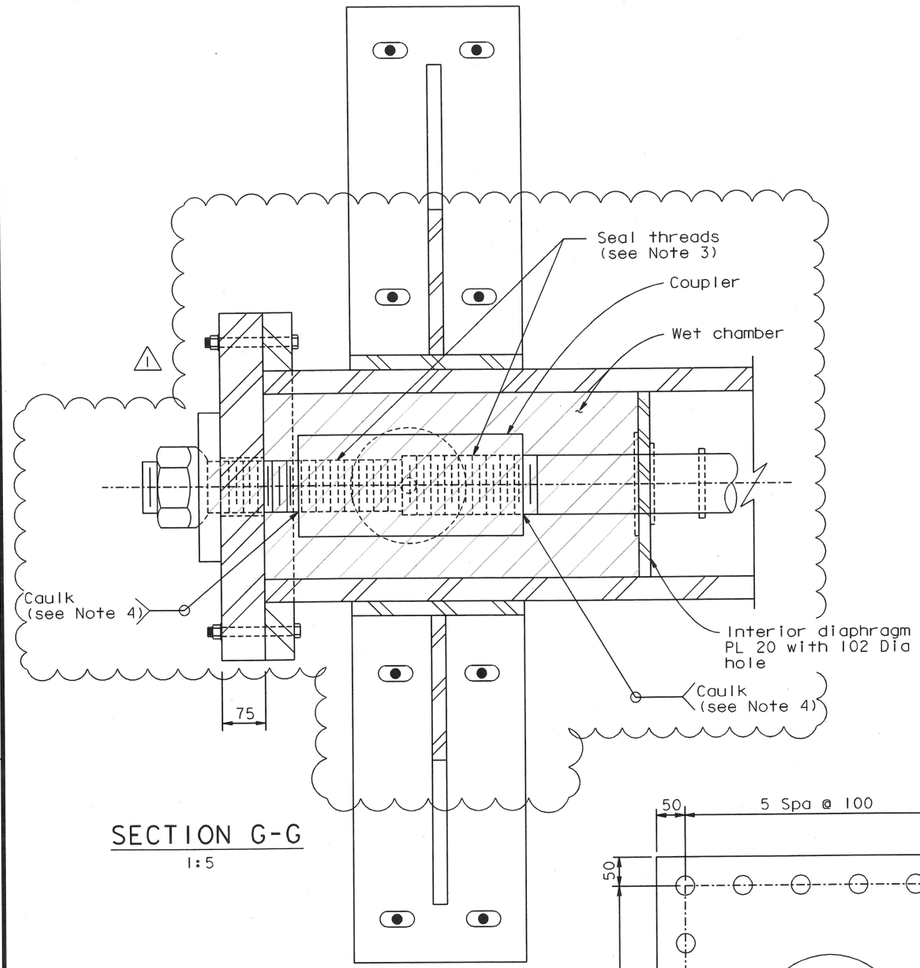

SECTION G-G
1:5

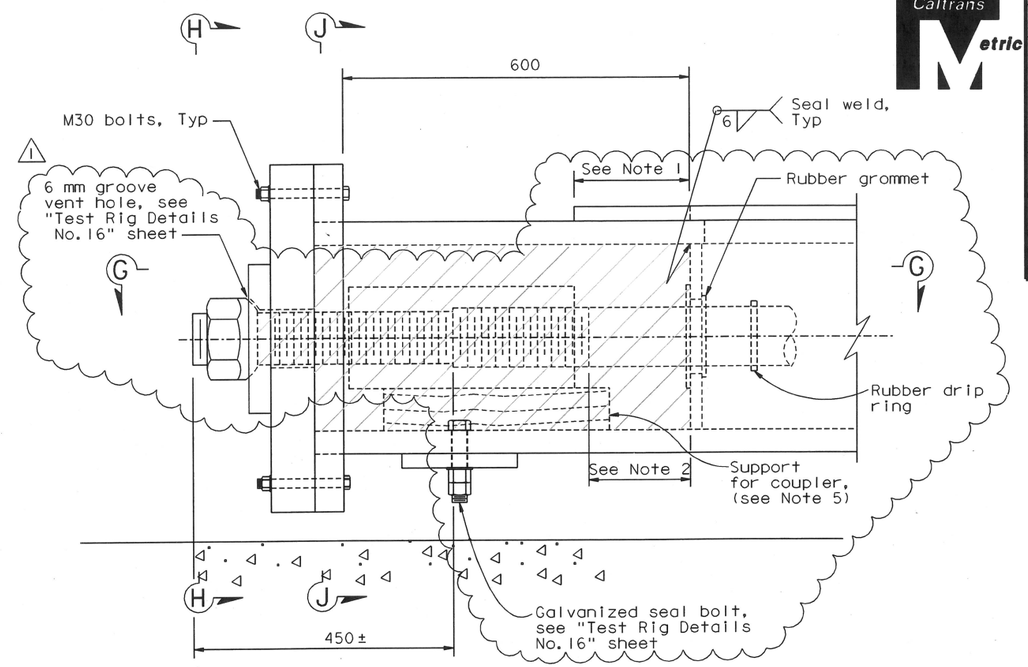

DETAIL B (Support bracket not shown for clarity)
1:5

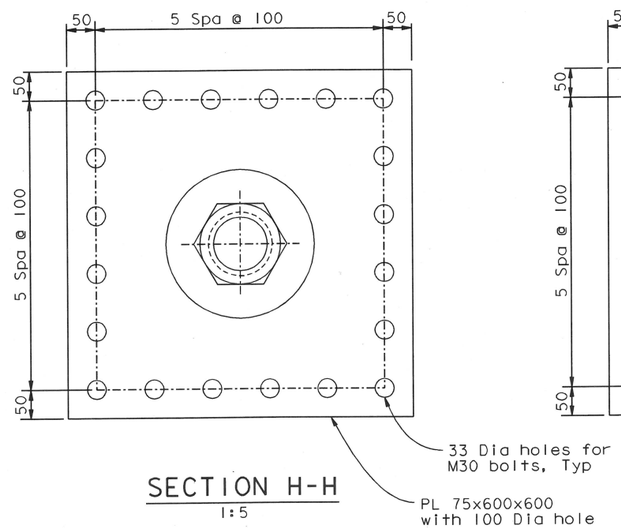

SECTION H-H
1:5

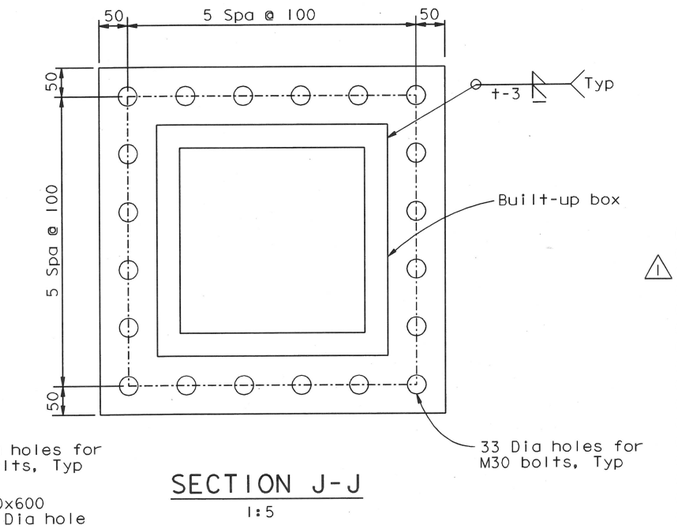

SECTION J-J
1:5

NOTES:

1. Coupler shall be placed 150 Clr minimum from face of interior diaphragm at installation.
2. End of threads shall be 100 mm Min Clr from the face of interior diaphragm.
3. Apply Rectorseal No.5 thread sealant or equivalent to seal threads against leaks. Submit product data sheet for review and approval by the Engineer.
4. Apply and tool Sikaflex 1A or equivalent all around to seal threads prior to painting. Submit product data sheet for review and approval by the Engineer.
5. Contractor to propose material for Engineer's review and approval. Material shall be non-metallic and non-expanding in contact with water.

CONTRACT CHANGE ORDER NO. 31453
SHEET 8 OF 14

REQUESTS FOR INFORMATION NOT ADDRESSED IN THIS CCO REMAIN IN FORCE

ALL DIMENSIONS ARE IN MILLIMETERS UNLESS OTHERWISE SHOWN

MARK	DATE	DESCRIPTIONS	BY	CH'D	CCO#
1	10/10/13	PIER E2 ROD TESTING	CC	MN	31453
0	06/11/13	REMOVE, REPLACE, AND TEST SAMPLE RODS	CC	MN	31451

REVISIONS

A. Akinsanya / W. Long
DESIGN OVERSIGHT
SIGN OFF DATE 10/10/13

Rev. Date: 5-22-13

	BY	CHECKED	
DESIGN	C. Choi	N. Vo	
DETAILS	G. Mok	J. Denis	
QUANTITIES	G. Mok	J. Denis	

PREPARED FOR THE STATE OF CALIFORNIA DEPARTMENT OF TRANSPORTATION

M. Nader
PROJECT ENGINEER

BRIDGE NO. 34-0006L/R
KILOMETER POST 13.2/13.9

SAN FRANCISCO OAKLAND BAY BRIDGE
EAST SPAN SEISMIC SAFETY PROJECT
SELF-ANCHORED SUSPENSION BRIDGE
(SUPERSTRUCTURE & TOWER)

TEST RIG DETAILS NO. 17

ORIGINAL SCALE IN MILLIMETERS FOR REDUCED PLANS 0 10 20 30 40 50 60 70 80 90 100

CU 04
EA 0120F1

DISREGARD PRINTS BEARING EARLIER REVISION DATES 06/11/13

REVISION DATES (PRELIMINARY STAGE ONLY)

SHEET 471S17R1 OF

FILE => I:\bb\04-012001\sas\contract plans and cco\cco\cco#31453\1-original 10-10-13\dgn\aksrr17.dgn

USERNAME => DWinrow DATE PLOTTED => 10 OCT 2013 TIME PLOTTED => 11:04:08

100 % PS&E

DIST.	COUNTY	ROUTE	KILOMETER POST TOTAL PROJECT	SHEET NO.	TOTAL SHEETS
04	SF	80	13.2/13.9	888S20R1	1204

REGISTERED ENGINEER - CIVIL

06-11-13
PLANS APPROVAL DATE

REGISTERED PROFESSIONAL ENGINEER Marwan N. Nader No. C 054426 Exp. 12/31/13 CIVIL STATE OF CALIFORNIA

The State of California or its officers or agents shall not be responsible for the accuracy or completeness of electronic copies of this plan sheet.

T.Y. LIN / MOFFATT & NICHOL
825 BATTERY STREET
SAN FRANCISCO, CA 94111

Caltrans now has a web site! To get to the web site, go to: http://www.dot.ca.gov

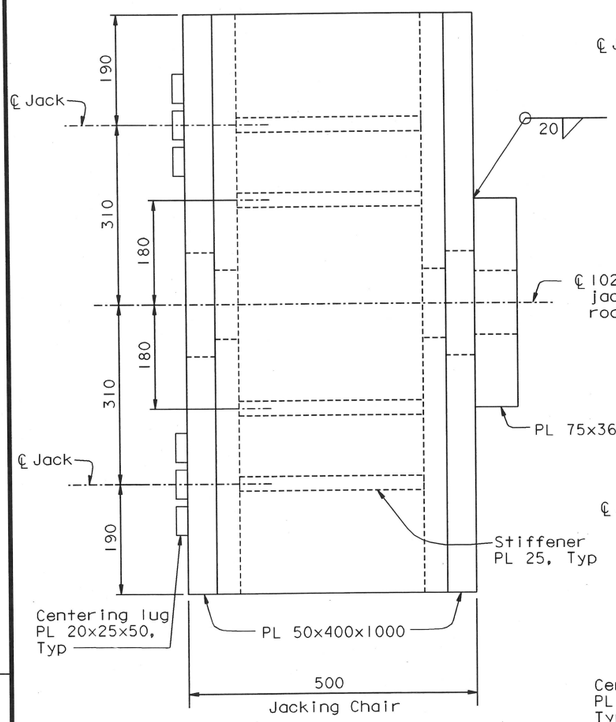

PLAN (For 300 Ton Jacks)
1:5

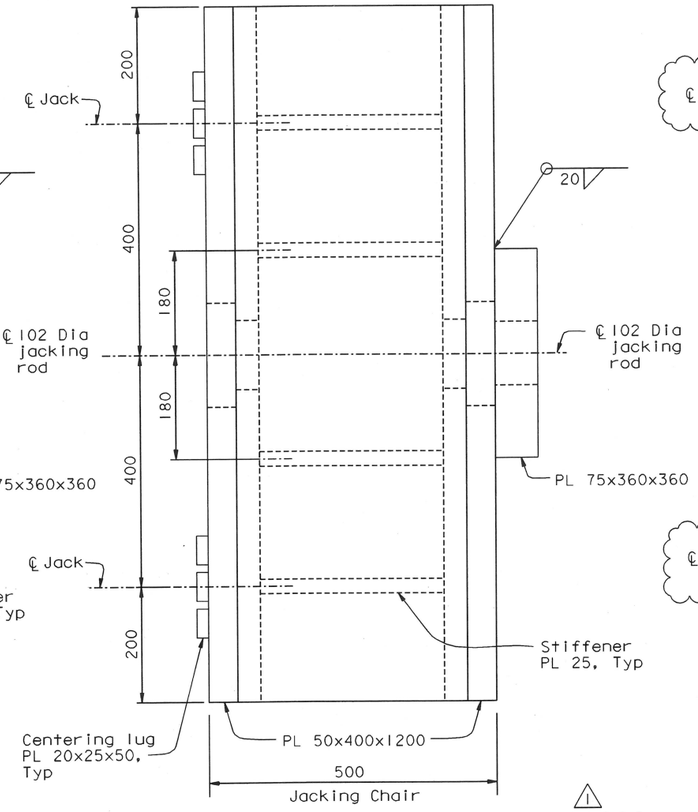

PLAN (For 400 Ton Jack)
1:5

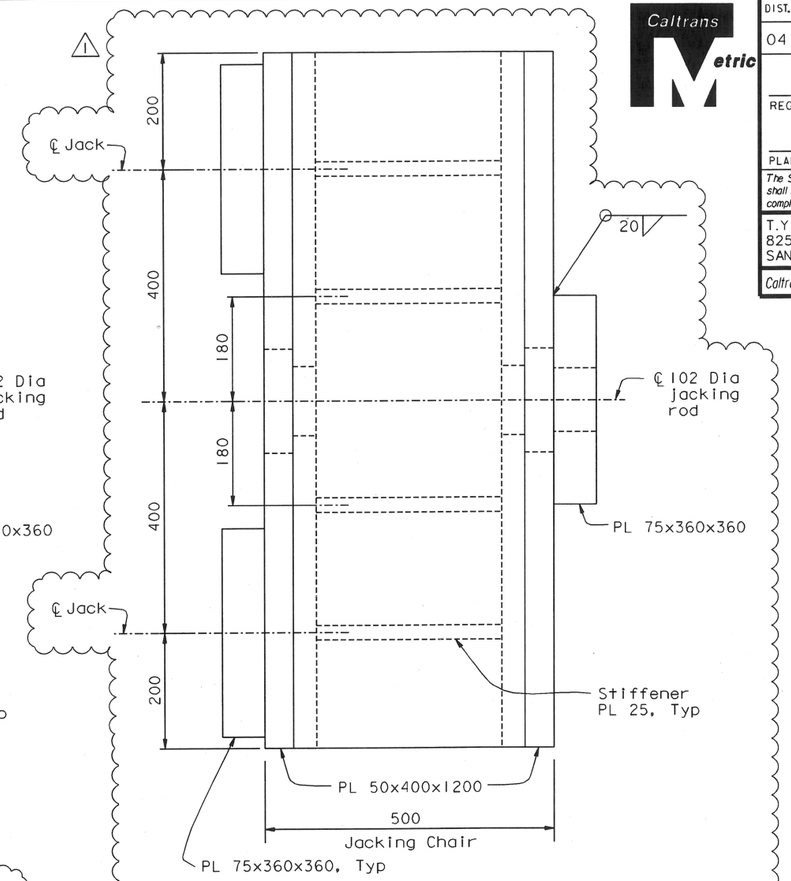

PLAN (For 500 Ton Jack)
1:5

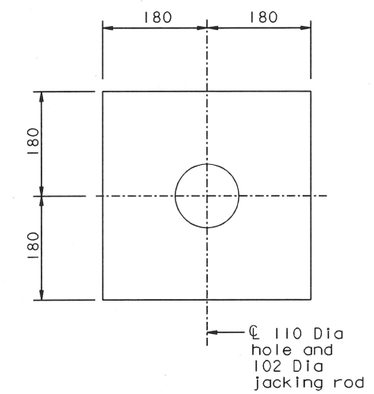

PL 75x360x360
1:5

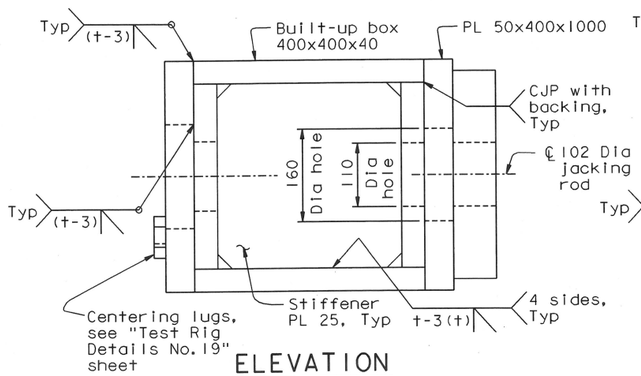

ELEVATION
1:5

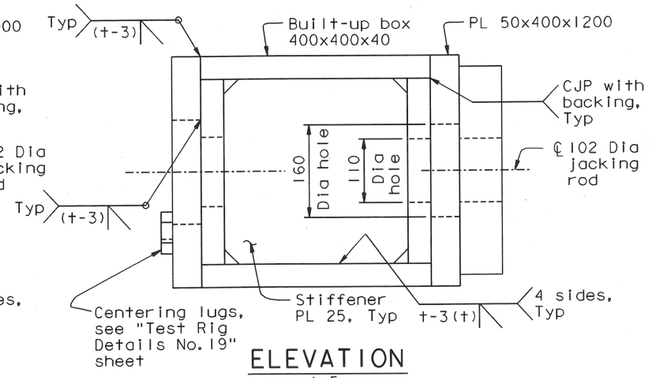

ELEVATION
1:5

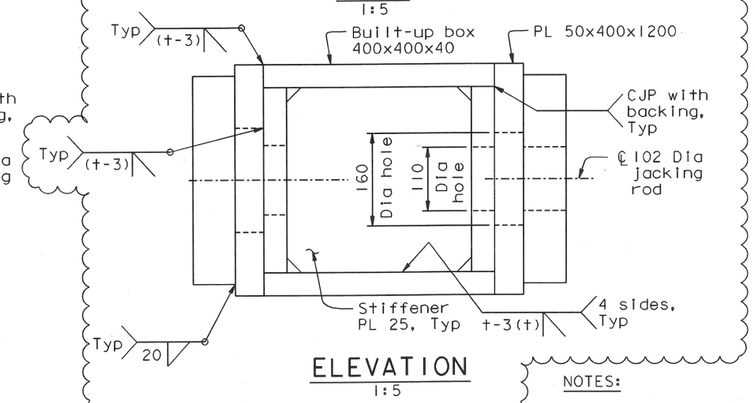

ELEVATION
1:5

NOTES:

1. All welds for built-up box shall be CJP with backing, UNO.

CONTRACT CHANGE ORDER NO. 314S3
SHEET 9 OF 14

REQUESTS FOR INFORMATION NOT ADDRESSED IN THIS CCO REMAIN IN FORCE

ALL DIMENSIONS ARE IN MILLIMETERS UNLESS OTHERWISE SHOWN

MARK	DATE	DESCRIPTIONS	BY	CH'D	CCO#
1	10/10/13	PIER E2 ROD TESTING	CC	MN	314S3
0	06/11/13	REMOVE, REPLACE, AND TEST SAMPLE RODS	CC	MN	314S1

REVISIONS

	BY	CHECKED
DESIGN	C. Choi	N. Vo
DETAILS	G. Mok	J. Denis
QUANTITIES	G. Mok	J. Denis

A. Akinsanya / W. Long
DESIGN OVERSIGHT
SIGN OFF DATE 10/10/13

Rev. Date: 5-18-98

PREPARED FOR THE STATE OF CALIFORNIA DEPARTMENT OF TRANSPORTATION

M. Nader
PROJECT ENGINEER

BRIDGE NO. 34-0006L/R
KILOMETER POST 13.2/13.9

SAN FRANCISCO OAKLAND BAY BRIDGE
EAST SPAN SEISMIC SAFETY PROJECT
SELF-ANCHORED SUSPENSION BRIDGE
(SUPERSTRUCTURE & TOWER)

TEST RIG DETAILS NO. 20

ORIGINAL SCALE IN MILLIMETERS FOR REDUCED PLANS 0 10 20 30 40 50 60 70 80 90 100

CU 04
EA 0120F1

DISREGARD PRINTS BEARING EARLIER REVISION DATES 06/11/13

REVISION DATES (PRELIMINARY STAGE ONLY)

SHEET 471S20R1 OF

FILE => I:\bb\04-01200I\sas\contract plans and cco\cco\cco=314s3\I-original 10-10-13\dgn\aksrr20.dgn

USERNAME => DWinrow DATE PLOTTED => 10 OCT 2013 TIME PLOTTED => 11:05:35

100 % PS&E

DIST.	COUNTY	ROUTE	KILOMETER POST TOTAL PROJECT	SHEET NO.	TOTAL SHEETS
04	SF	80	13.2/13.9	888S24R1	1204

REGISTERED ENGINEER - CIVIL

07-03-13

PLANS APPROVAL DATE

REGISTERED PROFESSIONAL ENGINEER Marwan N. Nader No. C 054426 Exp. 12/31/13 CIVIL STATE OF CALIFORNIA

The State of California or its officers or agents shall not be responsible for the accuracy or completeness of electronic copies of this plan sheet.

T.Y. LIN / MOFFATT & NICHOL
825 BATTERY STREET
SAN FRANCISCO, CA 94111

Caltrans now has a web site! To get to the web site, go to: http://www.dot.ca.gov

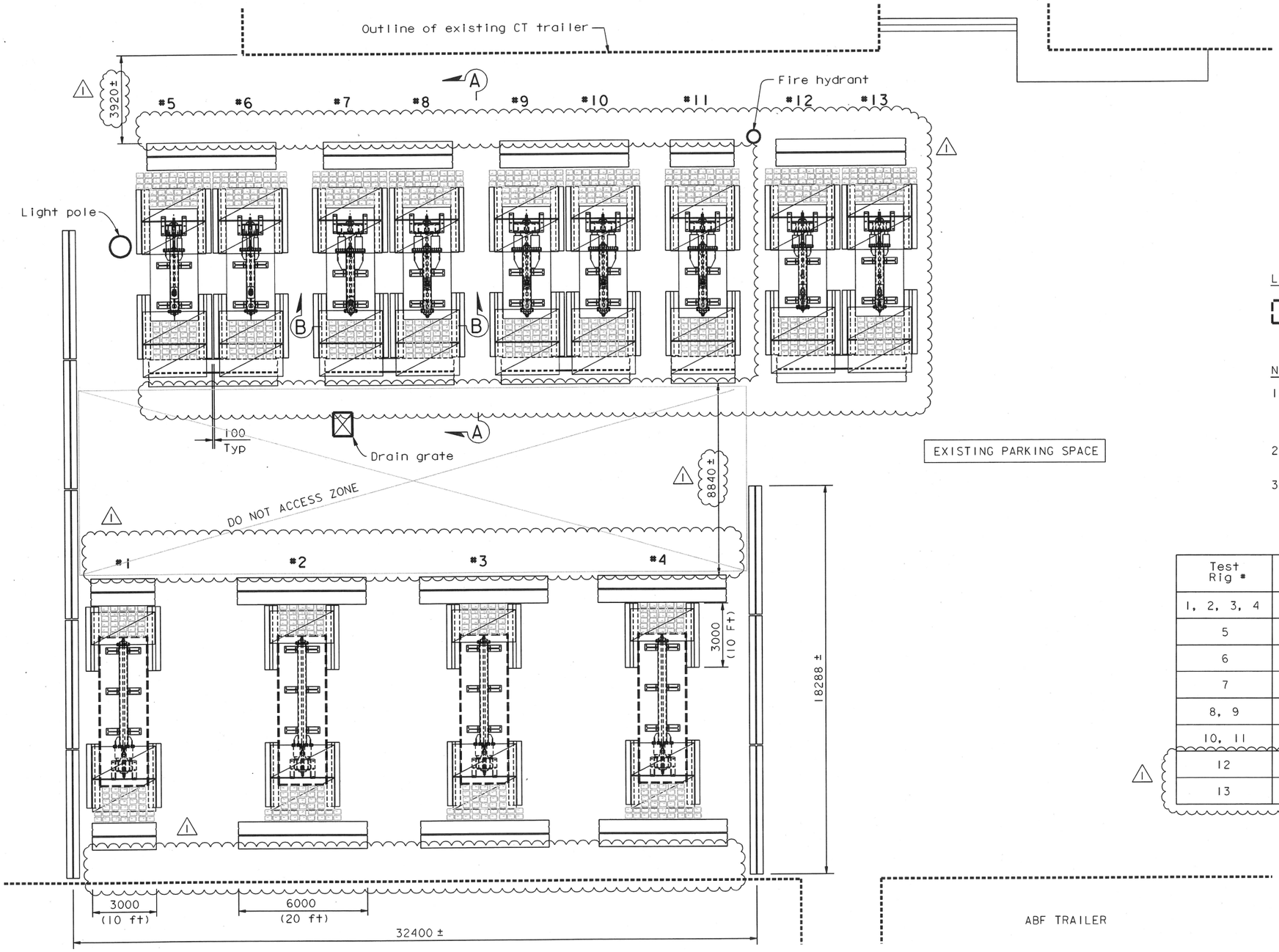

LEGEND:

Existing Concrete Slab

NOTES:

1. At the Contractor's option, General Arrangement (Alt. 2) may be used in lieu of the arrangement shown on "Test Rig Details No. 1" and "Test Rig Details No. 9" sheets.
2. Personnel shall stay clear from the "DO NOT ACCESS ZONE" at all times during testing.
3. For Sections A-A & B-B, see "Test Rig Details No. 25" sheet.

Test Rig #	Test Specimen	Nominal Bolt Dia	Approx. Specimen Length
1, 2, 3, 4	Pier E2 Anchor Bolts	76	6600±
5	Pier E2 Bearing Bolts-Top Housing	51	1105±
6	Tower Anchorage Anchor Bolts	76	1681±
7	Tower Saddle Tie Rods	102	1600±
8, 9	PWS Strand Anchor Rod-Main Cable (roller thread)	89	530±
10, 11	PWS Strand Anchor Rod-Main Cable (cut thread)	89	600±
12	Pier E2 Shear Key Anchor Bolts - 2008 (Top thread)	76	400±
13	Pier E2 Shear Key Anchor Bolts - 2008 (Bottom thread)	76	450±

CONTRACT CHANGE ORDER NO. 31453
SHEET 10 OF 14

REQUESTS FOR INFORMATION NOT ADDRESSED IN THIS CCO REMAIN IN FORCE

PLAN - GENERAL ARRANGEMENT (ALT. 2)

1:100

ALL DIMENSIONS ARE IN MILLIMETERS UNLESS OTHERWISE SHOWN

MARK	DATE	DESCRIPTIONS	BY	CH'D	CCO#
1	10/10/13	PIER E2 ROD TESTING	CC	MN	31453
0	07/03/13	REMOVE AND TEST SAMPLE RODS	CC	MN	31451

REVISIONS

A. Akinsanya / W. Long
DESIGN OVERSIGHT
SIGN OFF DATE 10/10/13

	BY	CHECKED	
DESIGN	C. Choi	N. Vo	
DETAILS	G. Mok	J. Denis	
QUANTITIES	G. MOK	J. Denis	

PREPARED FOR THE STATE OF CALIFORNIA DEPARTMENT OF TRANSPORTATION

M. Nader
PROJECT ENGINEER

BRIDGE NO. 34-0006L/R
KILOMETER POST 13.2/13.9

SAN FRANCISCO OAKLAND BAY BRIDGE
EAST SPAN SEISMIC SAFETY PROJECT
SELF-ANCHORED SUSPENSION BRIDGE
(SUPERSTRUCTURE & TOWER)

TEST RIG DETAILS NO. 24

Rev. Date: 5-18-98

ORIGINAL SCALE IN MILLIMETERS FOR REDUCED PLANS 0 10 20 30 40 50 60 70 80 90 100

CU 04
EA 0120F1

DISREGARD PRINTS BEARING EARLIER REVISION DATES 07/03/13

REVISION DATES (PRELIMINARY STAGE ONLY)

SHEET 471S24R1 OF

FILE => I:\bb\04-01200I\sas\contract plans and cco\cco\cco#31453\I-original 10-10-13\dgn\aksrr24.dgn

100 % PS&E

USERNAME => DWinrow DATE PLOTTED => 10 OCT 2013 TIME PLOTTED => 11:07:59

DIST.	COUNTY	ROUTE	KILOMETER POST TOTAL PROJECT	SHEET NO.	TOTAL SHEETS
04	SF	80	13.2/13.9	888S25R1	1204

REGISTERED ENGINEER - CIVIL

07-03-13
PLANS APPROVAL DATE

REGISTERED PROFESSIONAL ENGINEER Marwan N. Nader No. C 054426 Exp. 12/31/13 CIVIL STATE OF CALIFORNIA

The State of California or its officers or agents shall not be responsible for the accuracy or completeness of electronic copies of this plan sheet.

T.Y. LIN / MOFFATT & NICHOL
825 BATTERY STREET
SAN FRANCISCO, CA 94111

Caltrans now has a web site! To get to the web site, go to: http://www.dot.ca.gov

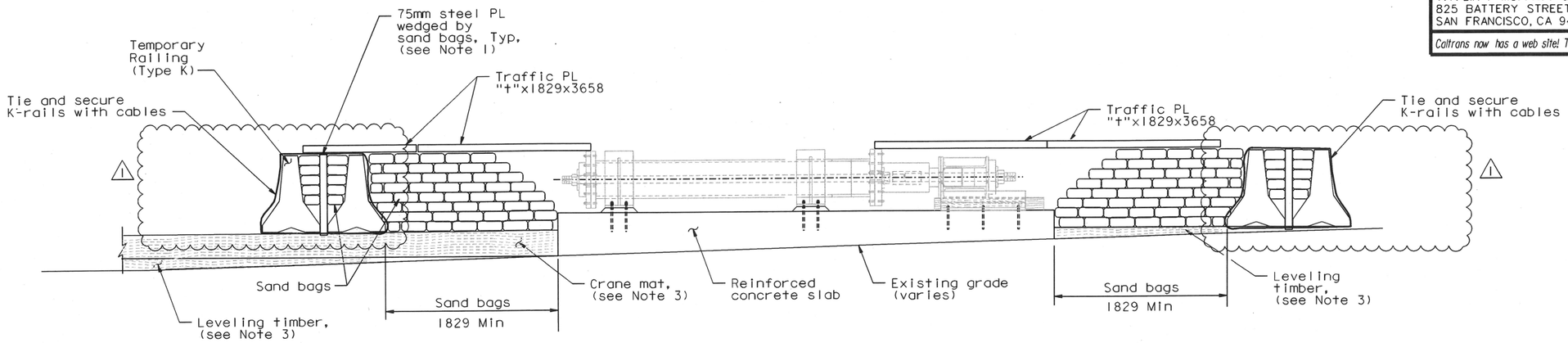

SECTION A-A
1:25

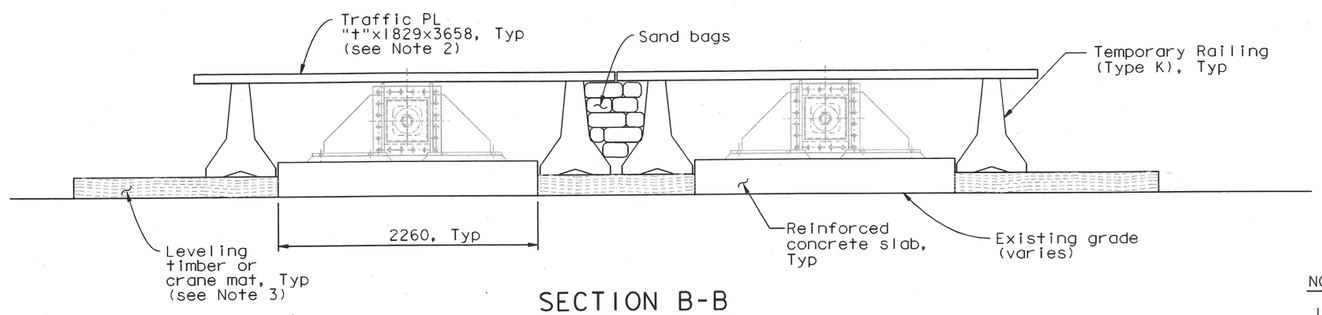

SECTION B-B
1:25

NOTES:

1. Install steel plate at full length of the temporary railing (Type K).
2. Tie-down Traffic PL to temporary railing (Type K).
3. Leveling timber and crane mat shall be used as necessary to adjust for traffic plate height.
4. Thickness "t" shall be 50 minimum.

100 % PS&E

CONTRACT CHANGE ORDER NO. 314S3
SHEET 11 OF 14

REQUESTS FOR INFORMATION NOT ADDRESSED IN THIS CCO REMAIN IN FORCE

ALL DIMENSIONS ARE IN MILLIMETERS UNLESS OTHERWISE SHOWN

A. Akinsanya / W. Long
DESIGN OVERSIGHT
SIGN OFF DATE 10/10/13

MARK	DATE	DESCRIPTIONS	BY	CH'D	CCO#
1	10/10/13	PIER E2 ROD TESTING	CC	MN	314S3
0	07/03/13	REMOVE AND TEST SAMPLE RODS	CC	MN	314S1

REVISIONS

DESIGN	BY C. Choi	CHECKED N. Vo	
DETAILS	BY G. Mok	CHECKED J. Denis	
QUANTITIES	BY G. MOK	CHECKED J. Denis	

PREPARED FOR THE STATE OF CALIFORNIA DEPARTMENT OF TRANSPORTATION

M. Nader
PROJECT ENGINEER

BRIDGE NO. 34-0006L/R
KILOMETER POST 13.2/13.9

SAN FRANCISCO OAKLAND BAY BRIDGE
EAST SPAN SEISMIC SAFETY PROJECT
SELF-ANCHORED SUSPENSION BRIDGE
(SUPERSTRUCTURE & TOWER)

TEST RIG DETAILS NO. 25

Rev. Date: 5-18-98

ORIGINAL SCALE IN MILLIMETERS FOR REDUCED PLANS 0 10 20 30 40 50 60 70 80 90 100

CU 04
EA 0120F1

DISREGARD PRINTS BEARING EARLIER REVISION DATES 07/03/13

REVISION DATES (PRELIMINARY STAGE ONLY)

SHEET 471S25R1 OF

FILE => I:\bb\04-012001\sas\contract plans and cco\cco\cco#314s3\1-original 10-10-13\dgn\aksrr25.dgn

USERNAME => DWinrow DATE PLOTTED => 10 OCT 2013 TIME PLOTTED => 11:09:26

DIST.	COUNTY	ROUTE	KILOMETER POST TOTAL PROJECT	SHEET NO.	TOTAL SHEETS
04	SF	80	13.2/13.9	888S26	1204

REGISTERED ENGINEER - CIVIL

12-05-13
PLANS APPROVAL DATE

REGISTERED PROFESSIONAL ENGINEER Marwan N. Nader No. C 054426 Exp. 12/31/13 CIVIL STATE OF CALIFORNIA

The State of California or its officers or agents shall not be responsible for the accuracy or completeness of electronic copies of this plan sheet.

T.Y. LIN / MOFFATT & NICHOL
825 BATTERY STREET
SAN FRANCISCO, CA 94111

Caltrans now has a web site! To get to the web site, go to: http://www.dot.ca.gov

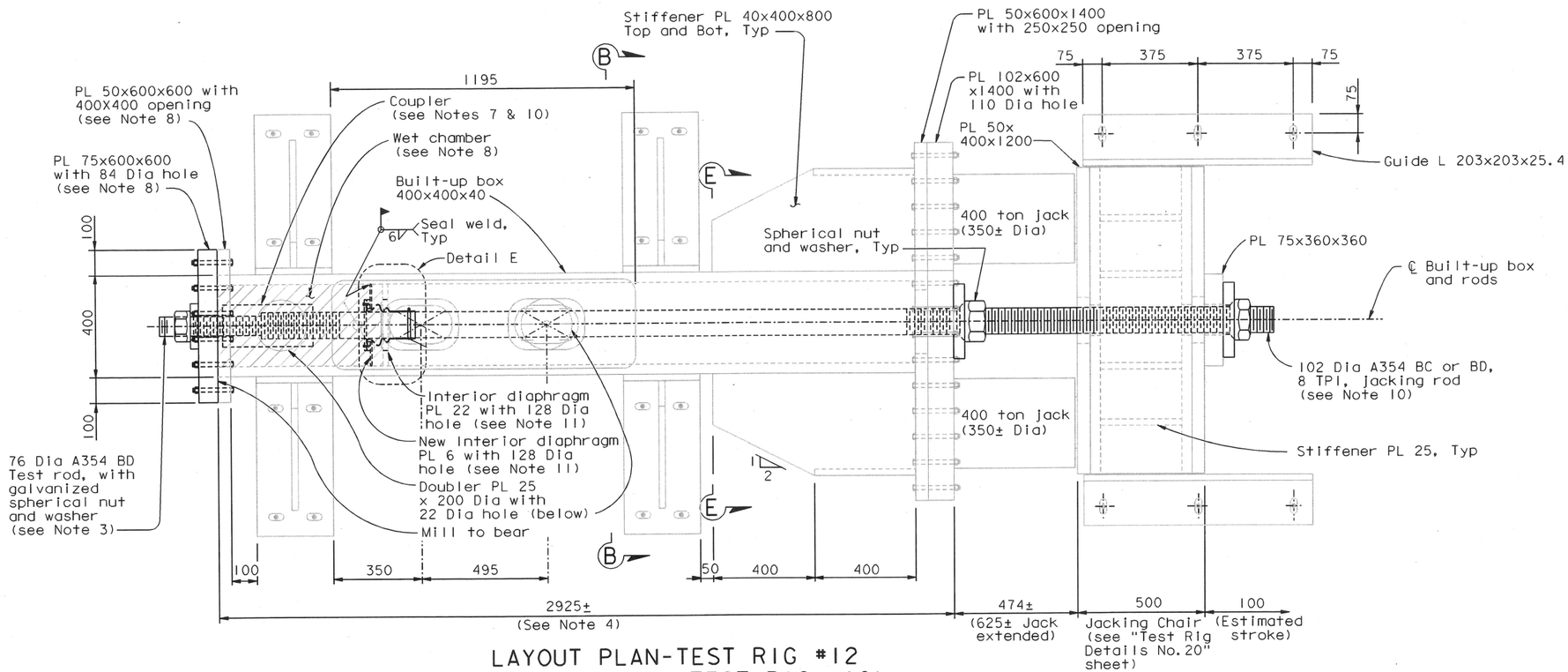

LAYOUT PLAN-TEST RIG #12 (MODIFIED FROM TEST RIG #10)

1:10

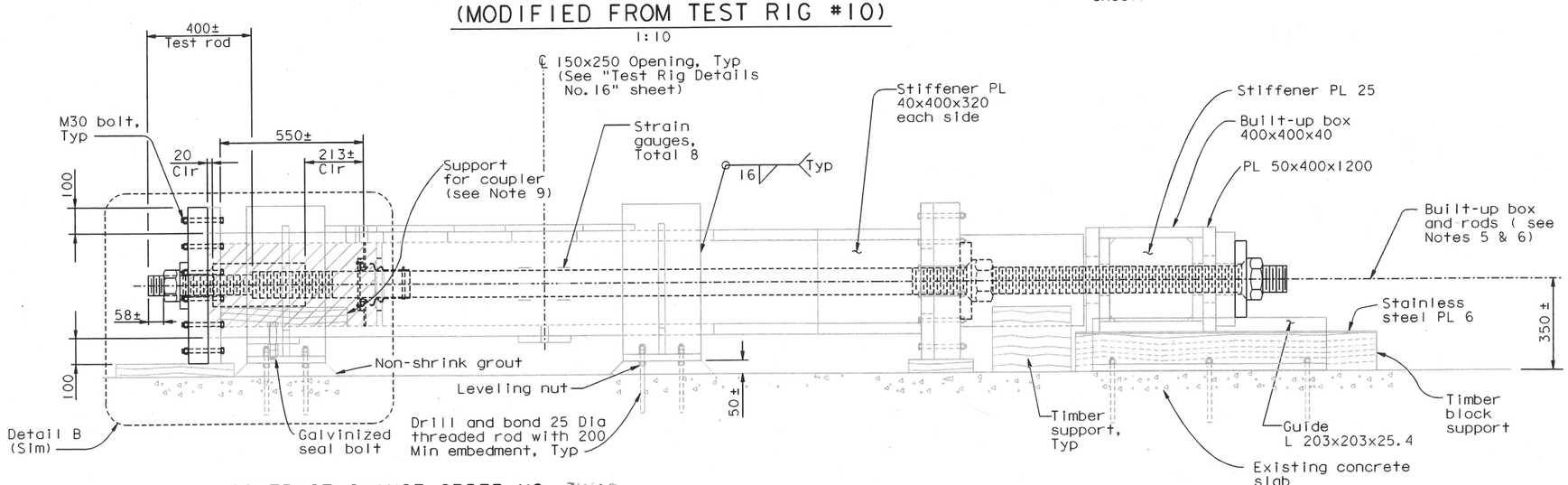

ELEVATION

1:10

NOTES:

1. For pre-use inspection on existing test rigs #10 and #11 and test rig modification procedure, see "Test Rig Details No. 28" sheet.
2. For Detail B, see "Test Rig Details No. 17" sheet. For Section B-B, see "Test Rig Details No. 15" sheet. For Section E-E, see "Test Rig Details No. 18" sheet.
3. Minimum of 75 mm of threads of the rod shall be submerged in the NaCl solution at the start of the test.
4. Built-up box 400x400x40 (Test Rig #10) shall be used.
5. Test assembly shall be checked for levelness.
6. CL of built-up box and rods shall be aligned to within 4 mm.
7. For coupler detail, see Detail C on "Test Rig Details No. 28" sheet.
8. All interior wetted surfaces of wet chambers, including inside of holes, shall be painted with two coats of epoxy based system or equivalent. Surface preparation and application procedure shall be per manufacturers' recommendations.
9. Contractor to propose material for Engineer's review and approval. Material shall be non-metallic and non-expanding in contact with water.
10. Coupler and portion of jacking rod submerged in NaCl solution shall be painted with two coats of epoxy based system or equivalent. Surface preparation and application procedure shall be per manufacturers' recommendations.
11. For existing interior diaphragm and new interior diaphragm, see Detail E on "Test Rig Details No. 28" sheet.
12. Structural steel Notes on "Test Rig Details No. 9" sheet apply.

CONTRACT CHANGE ORDER NO. 314S3
SHEET 12 OF 14

REQUESTS FOR INFORMATION NOT ADDRESSED IN THIS CCO REMAIN IN FORCE

ALL DIMENSIONS ARE IN MILLIMETERS UNLESS OTHERWISE SHOWN

A. Akinsanya / W. Long
DESIGN OVERSIGHT
SIGN OFF DATE 12/05/13

MARK	DATE	DESCRIPTIONS	BY	CH'D	CCO#
0	12/05/13	PIER E2 ROD TESTING	CC	MN	314S3

REVISIONS

DESIGN	BY C. Choi	CHECKED	N. Vo
DETAILS	BY G. Mok	CHECKED	J. Denis
QUANTITIES	BY G. Mok	CHECKED	J. Denis

PREPARED FOR THE STATE OF CALIFORNIA DEPARTMENT OF TRANSPORTATION

M. Nader
PROJECT ENGINEER

BRIDGE NO. 34-0006L/R
KILOMETER POST 13.2/13.9

SAN FRANCISCO OAKLAND BAY BRIDGE
EAST SPAN SEISMIC SAFETY PROJECT
SELF-ANCHORED SUSPENSION BRIDGE
(SUPERSTRUCTURE & TOWER)

TEST RIG DETAILS NO. 26

Rev. Date: 5-22-13

ORIGINAL SCALE IN MILLIMETERS FOR REDUCED PLANS 0 10 20 30 40 50 60 70 80 90 100

CU 04
EA 0120F1

DISREGARD PRINTS BEARING EARLIER REVISION DATES 12/05/13

REVISION DATES (PRELIMINARY STAGE ONLY)

SHEET 471S26 OF

FILE => I:\bb\04-0120F1\sas\contract plans and cco\cco\cco#314s3\3-update 12-05-13\dgn\aksrr26.dgn

100% PS&E

USERNAME => arivera DATE PLOTTED => 05 DEC 2013 TIME PLOTTED => 12:04:39

DIST.	COUNTY	ROUTE	KILOMETER POST TOTAL PROJECT	SHEET NO.	TOTAL SHEETS
04	SF	80	13.2/13.9	888S27	1204

REGISTERED ENGINEER - CIVIL

12-05-13
PLANS APPROVAL DATE

REGISTERED PROFESSIONAL ENGINEER Marwan N. Nader No. C 054426 Exp. 12/31/13 CIVIL STATE OF CALIFORNIA

The State of California or its officers or agents shall not be responsible for the accuracy or completeness of electronic copies of this plan sheet.

T.Y. LIN / MOFFATT & NICHOL
825 BATTERY STREET
SAN FRANCISCO, CA 94111

Caltrans now has a web site! To get to the web site, go to: http://www.dot.ca.gov

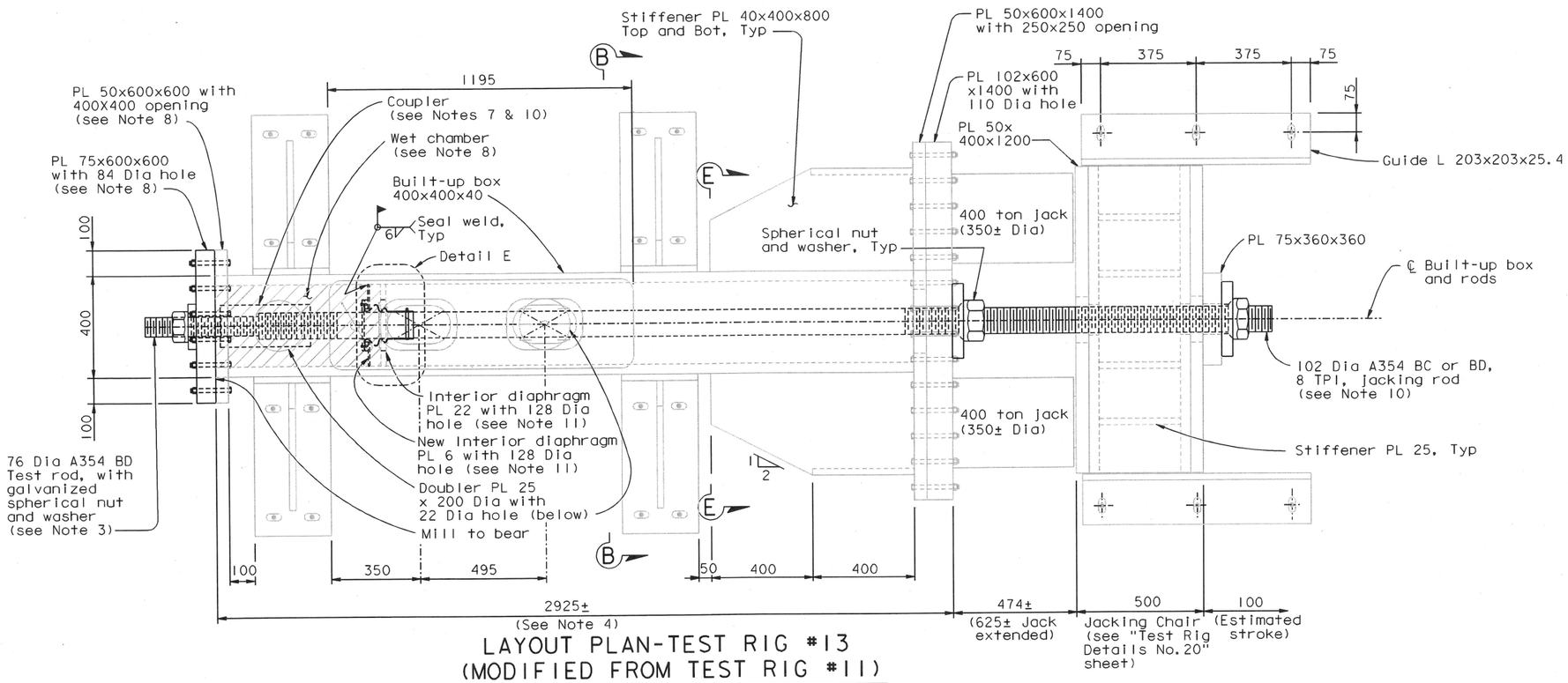

LAYOUT PLAN-TEST RIG #13 (MODIFIED FROM TEST RIG #11)

1:10

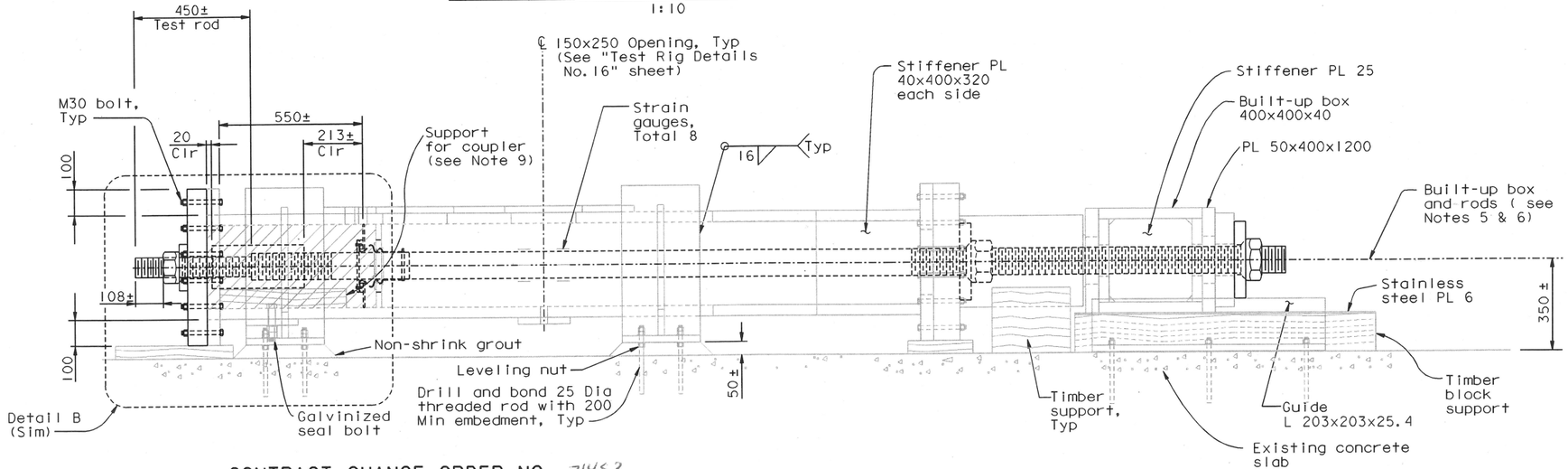

ELEVATION

1:10

NOTES:

1. For pre-use inspection on existing test rigs #10 and #11 and test rig modification procedure, see "Test Rig Details No. 28" sheet.
2. For Detail B, see "Test Rig Details No. 17" sheet. For Section B-B, see "Test Rig Details No. 15" sheet. For Section E-E, see "Test Rig Details No. 18" sheet.
3. Minimum of 75 mm of threads of the rod shall be submerged in the NaCl solution at the start of the test.
4. Built-up box 400x400x40 (Test Rig #11) shall be used.
5. Test assembly shall be checked for levelness.
6. CL of built-up box and rods shall be aligned to within 4 mm.
7. For coupler detail, see Detail D on "Test Rig Details No. 28" sheet.
8. All interior wetted surfaces of wet chambers, including inside of holes, shall be painted with two coats of epoxy based system or equivalent. Surface preparation and application procedure shall be per manufacturers' recommendations.
9. Contractor to propose material for Engineer's review and approval. Material shall be non-metallic and non-expanding in contact with water.
10. Coupler and portion of jacking rod submerged in NaCl solution shall be painted with two coats of epoxy based system or equivalent. Surface preparation and application procedure shall be per manufacturers' recommendations.
11. For existing interior diaphragm and new interior diaphragm, see Detail E on "Test Rig Details No. 28" sheet.
12. Structural steel Notes on "Test Rig Details No. 9" sheet apply.

CONTRACT CHANGE ORDER NO. 31453
SHEET 13 OF 14

REQUESTS FOR INFORMATION NOT ADDRESSED IN THIS CCO REMAIN IN FORCE

ALL DIMENSIONS ARE IN MILLIMETERS UNLESS OTHERWISE SHOWN

MARK	DATE	DESCRIPTIONS	BY	CH'D	CCO#
0	12/05/13	PIER E2 ROD TESTING	CC	MN	31453

REVISIONS

A. Akinsanya / W. Long
DESIGN OVERSIGHT
SIGN OFF DATE 12/05/12

Rev. Date: 5-22-13

	BY	CHECKED
DESIGN	C. Choi	N. Vo
DETAILS	G. Mok	J. Denis
QUANTITIES	G. Mok	J. Denis

PREPARED FOR THE STATE OF CALIFORNIA DEPARTMENT OF TRANSPORTATION

M. Nader
PROJECT ENGINEER

BRIDGE NO. 34-0006L/R
KILOMETER POST 13.2/13.9

CU 04
EA 0120F1

ORIGINAL SCALE IN MILLIMETERS FOR REDUCED PLANS 0 10 20 30 40 50 60 70 80 90 100

DISREGARD PRINTS BEARING EARLIER REVISION DATES 12/05/13

SAN FRANCISCO OAKLAND BAY BRIDGE
EAST SPAN SEISMIC SAFETY PROJECT
SELF-ANCHORED SUSPENSION BRIDGE
(SUPERSTRUCTURE & TOWER)

TEST RIG DETAILS NO. 27

REVISION DATES (PRELIMINARY STAGE ONLY) 12/05/13

SHEET 471S27 OF

FILE => I:\bb\04-012001\sas\contract plans and cco\cco\cco#31453\3-update 12-05-13\dgn\aksrr27.dgn

USERNAME => arlvera DATE PLOTTED => 05 DEC 2013 TIME PLOTTED => 12:09:28

100 % PS&E

DIST.	COUNTY	ROUTE	KILOMETER POST TOTAL PROJECT	SHEET NO.	TOTAL SHEETS
04	SF	80	13.2/13.9	888S28	1204

REGISTERED ENGINEER - CIVIL

12-05-13
PLANS APPROVAL DATE

REGISTERED PROFESSIONAL ENGINEER Marwan N. Nader No. C 054426 Exp. 12/31/13 CIVIL STATE OF CALIFORNIA

The State of California or its officers or agents shall not be responsible for the accuracy or completeness of electronic copies of this plan sheet.

T.Y. LIN / MOFFATT & NICHOL
825 BATTERY STREET
SAN FRANCISCO, CA 94111

Caltrans now has a web site! To get to the web site, go to: http://www.dot.ca.gov

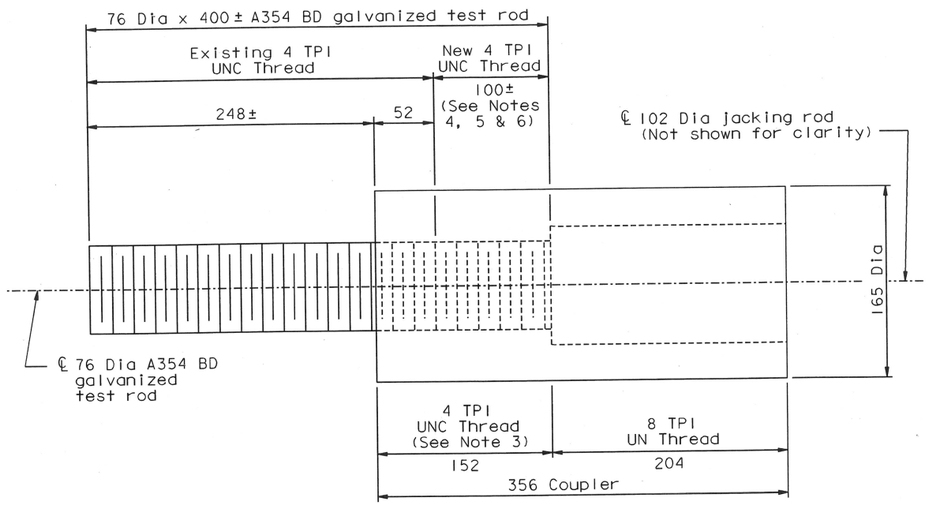

DETAIL C (COUPLER DETAIL - RIG #12)
1:2.5

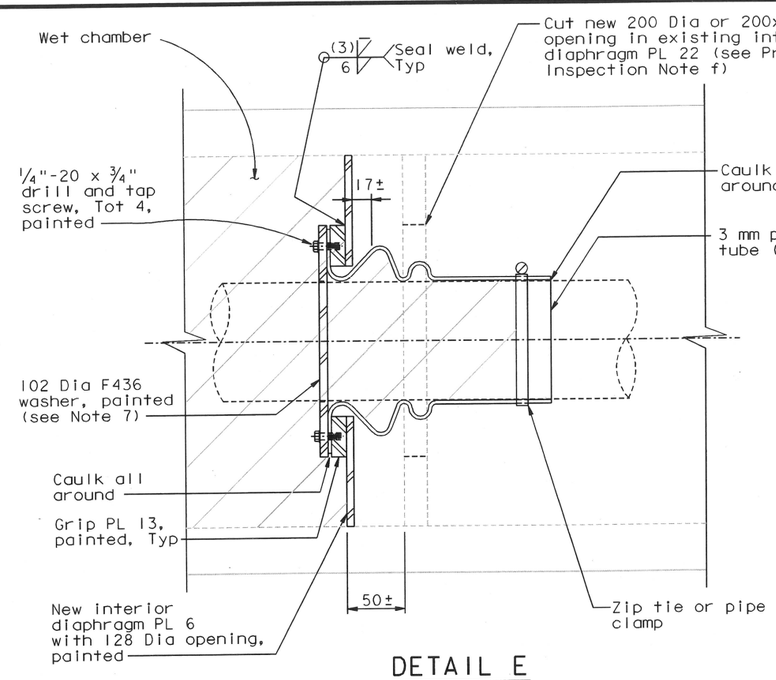

DETAIL E
1:2.5

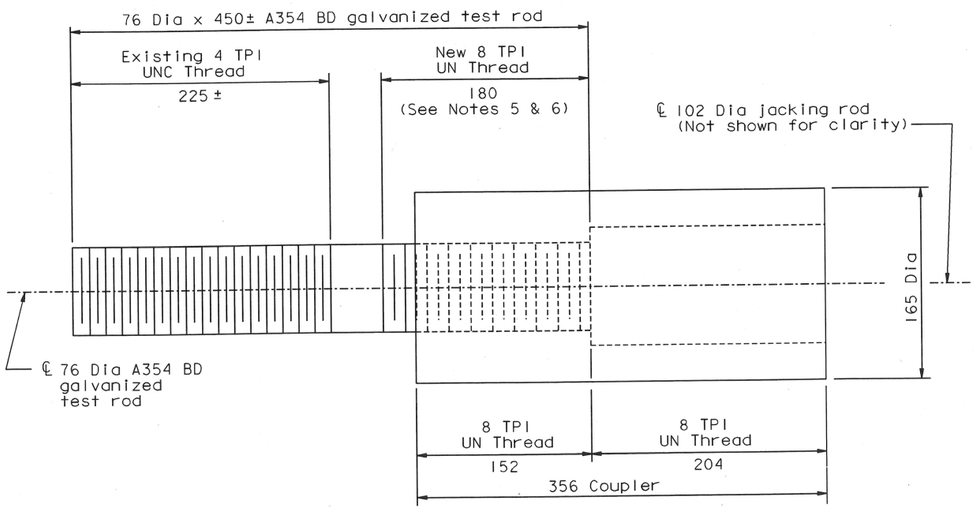

DETAIL D (COUPLER DETAIL - RIG #13)
1:2.5

NOTES:

1. For layout in test rigs, see "Test Rig Details No. 26" and "Test Rig Detail No. 27" sheets.
2. Coupler and jacking rod shall be fabricated from AISI 4340 materials, with mechanical properties conforming to ASTM A354 BC.
3. Tapping of the coupler threads shall account for the thickness of galvanizing on the test rod.
4. New threads shall be continuous from existing threads. Existing galvanized threads shall be kept intact.
5. New threads shall not be galvanized.
6. New threads shall be cut in a lathe, and shall be concentric to the existing thread to within 0.005 inch.
7. At the Contractor's option, structural steel conforming to ASTM A36/A36M (Fy=250 MPa) of the same dimensions may be used.
8. Contractor may propose alternate sealing details and material, subject to review and approval of the Engineer.

PRE-USE INSPECTION ON EXISTING TEST RIGS #10, #11 AND HARDWARE:

Prior to re-using the existing test rigs, the existing test rigs and jacking chairs shall be inspected for:

a. Surface damage/ defects on structural steel.
b. Perform 100% VT on all fillet, PJP, and CJP welds.
c. For welds between the end PL's 50 and the built-up box, where accessible, perform 100% MT.
d. For welds between the support PL's 25 and the built-up box, where accessible, perform 10% MT.
e. Inspect and report to the Engineer the out-of-squareness of end PL's relative to the built-up box. Out-of-squareness tolerance shall be 0.01 radian.
f. Actual damage to the existing diaphragm PL 22 shall be evaluated by the Engineer. Additional inspection and retrofit may be required by the Engineer based on the actual damage.
g. Re-use of existing hardware for other Test Rigs is contingent on the Engineer's review and approval.
At a minimum:

- Perform 100% VT and 100% MT on both threaded and unthreaded portions of the existing jacking rods
- Perform 100% VT, using boroscope as needed, on couplers, nuts, and washers for cracks, thread striping, and other damage.
- Additional inspection and information may be required by the Engineer based on inspection findings.

TEST-RIG MODIFICATION PROCEDURE:

1. Cut new 200 Dia or 200x200 opening in existing damaged interior diaphragm PL 22.
2. Weld on new interior diaphragm PL 6 complete with grip PL 13.
3. Clean and remove all rust stains inside the wet chambers.
4. Repair damaged paint on all interior wetted surfaces of the wet chambers, including inside of holes. Surface preparation and application procedure shall be per manufacturer's recommendations.
5. The Contractor may sequence the above work according to his means and methods.
6. Structural steel Notes on "Test Rig Details No. 9" sheet apply.

CONTRACT CHANGE ORDER NO. 31453
SHEET 14 OF 14

REQUESTS FOR INFORMATION NOT ADDRESSED IN THIS CCO REMAIN IN FORCE

ALL DIMENSIONS ARE IN MILLIMETERS UNLESS OTHERWISE SHOWN

A. Akinsanya / W. Long
DESIGN OVERSIGHT
SIGN OFF DATE 12/05/13

MARK	DATE	DESCRIPTIONS	BY	CH'D	CCO#
0	12/05/13	PIER E2 ROD TESTING	CC	MN	31453

REVISIONS

DESIGN	BY C. Choi	CHECKED	N. Vo
DETAILS	BY G. Mok	CHECKED	J. Denis
QUANTITIES	BY G. Mok	CHECKED	J. Denis

PREPARED FOR THE STATE OF CALIFORNIA DEPARTMENT OF TRANSPORTATION

M. Nader
PROJECT ENGINEER

BRIDGE NO. 34-0006L/R
KILOMETER POST 13.2/13.9

SAN FRANCISCO OAKLAND BAY BRIDGE
EAST SPAN SEISMIC SAFETY PROJECT
SELF-ANCHORED SUSPENSION BRIDGE
(SUPERSTRUCTURE & TOWER)

TEST RIG DETAILS NO. 28

CU 04
EA 0120F1

DISREGARD PRINTS BEARING EARLIER REVISION DATES 12/05/13

REVISION DATES (PRELIMINARY STAGE ONLY)

SHEET 471S28 OF

ORIGINAL SCALE IN MILLIMETERS FOR REDUCED PLANS 0 10 20 30 40 50 60 70 80 90 100

Rev. Date: 5-22-13

FILE => I:\bb\04-012001\sas\contract plans and cco\cco\cco#31453\3-update 12-05-13\dgn\aksrr28.dgn

100 % PS&E

USERNAME => arivera DATE PLOTTED => 05 DEC 2013 TIME PLOTTED => 12:10:43