DIST.	COUNTY	ROUTE	KILOMETER POST TOTAL PROJECT	SHEET NO.	TOTAL SHEETS
04	SF	80	13.2/13.9	888S10R1	1204

REGISTERED ENGINEER - CIVIL

06-11-13
PLANS APPROVAL DATE

REGISTERED PROFESSIONAL ENGINEER Marwan N. Nader No. C 054426 Exp. 12/31/13 CIVIL STATE OF CALIFORNIA

The State of California or its officers or agents shall not be responsible for the accuracy or completeness of electronic copies of this plan sheet.

T.Y. LIN / MOFFATT & NICHOL
825 BATTERY STREET
SAN FRANCISCO, CA 94111

Caltrans now has a web site! To get to the web site, go to: http://www.dot.ca.gov

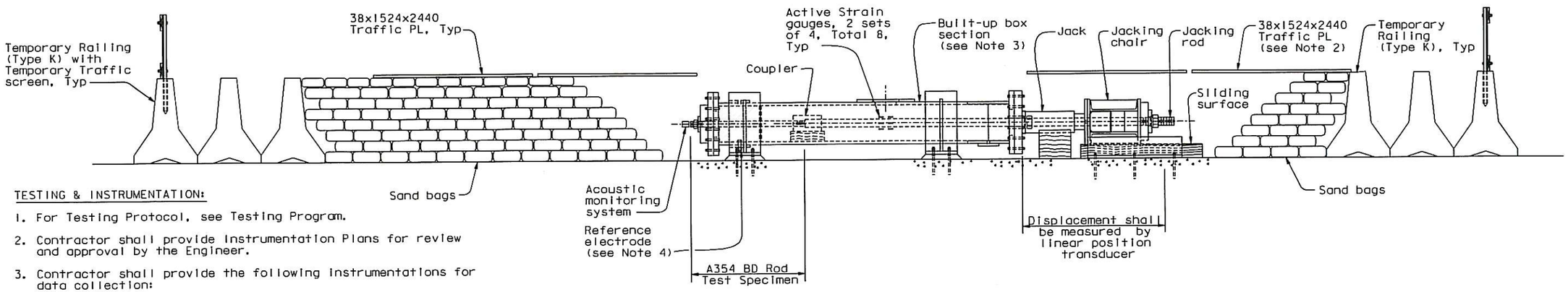

ELEVATION - TEST SET UP

NTS
(Test Rig No. 5 shown, others similar)

TESTING & INSTRUMENTATION:

1. For Testing Protocol, see Testing Program.
2. Contractor shall provide Instrumentation Plans for review and approval by the Engineer.
3. Contractor shall provide the following instrumentations for data collection:
   a. Acoustic monitoring - Micro II Digital AE System with R15I-AST model AE sensor, or equivalent (1 per test specimen)
   b. Linear position transducer (2 per test specimen placed 180° apart)
   c. Active strain gauges (8 per test specimen), placed as shown on test specimen.
   d. Secondary strain gauges (8 per test specimen), connect to unstressed steel plate (see Note 5)
   e. Reference electrode (1 per test specimen)
   f. Outside air temperature thermocouple (1 per test specimen)
   g. NaCl solution temperature thermocouple (1 per test specimen)
4. The following data shall be collected and recorded against time from the start of the test continuously when applicable. At a minimum, data shall be collected and recorded at the beginning and at the end of each load step, and at an interval not exceeding 8 hours:
   a. Load (hydraulic pressure from Jacks, calibrate jacks and pressure gauge)
   b. Displacement
   c. Confirmation of water level above the top of test specimen with plexiglass tube
   d. pH level of NaCl solution
   e. Reference electrode readings
   f. Strain gauge readings
   g. Acoustic emission events
   h. Temperatures
5. For each active strain gauge, a secondary strain gauge shall be furnished to provide for thermal compensation. The secondary strain gauge shall be of the same size and lot as the gauge and may be attached to unstressed steel plate inside the box section. The secondary strain gauge shall be connected to the Wheatstone bridge circuit on the same side as the active gauge.
6. Ensure that the threads behind the nut are wet prior to the start of the test.
7. Sets of strain gauges shall be placed 150 mm apart. Strain gauges shall be placed on unthreaded portion of test specimen/jacking rod.

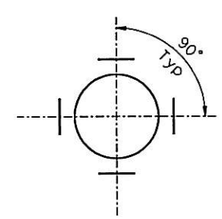

ACTIVE STRAIN GAUGE ARRANGEMENT

NTS

NOTES:

1. Traffic PL's are supported on Temporary Railing (Type K). Alternatively, Traffic PL's may be supported on concrete blocks to achieve desired height. They shall be tied down with wire ropes and anchors, or tied to adjacent Temporary Railing (Type K).
2. ⚠ 300x300 window shall be cut in the traffic PL to allow access for locking off the spherical nut. At the Contractor's option, window may be enlarged, subject to review and approval by the Engineer.
3. For details of built-up box section, see "Test Rig Details No.11 through 14" sheets.
4. For details of reference electrode, see" Test Rig Details No.16" sheet.
5. Test set up shall be shielded from direct sunlight.

CONTRACT CHANGE ORDER NO. 31452
SHEET 2 OF 7

REQUESTS FOR INFORMATION NOT ADDRESSED IN THIS CCO REMAIN IN FORCE

ALL DIMENSIONS ARE IN MILLIMETERS UNLESS OTHERWISE SHOWN

MARK	DATE	DESCRIPTIONS	BY	CH'D	CCO#
1	08/01/13	REMOVE AND TEST SAMPLE RODS	CC	MN	31452
0	06/11/13	REMOVE, REPLACE, AND TEST SAMPLE RODS	CC	MN	31451

REVISIONS

A. Akinsanya / W. Long
DESIGN OVERSIGHT
SIGN OFF DATE 08/01/13

DESIGN	BY C. Choi	CHECKED	N. Vo
DETAILS	BY G. Mok	CHECKED	J. Denis
QUANTITIES	BY G. Mok	CHECKED	J. Denis

PREPARED FOR THE STATE OF CALIFORNIA DEPARTMENT OF TRANSPORTATION

M. Nader
PROJECT ENGINEER

BRIDGE NO. 34-0006L/R
KILOMETER POST 13.2/13.9

SAN FRANCISCO OAKLAND BAY BRIDGE
EAST SPAN SEISMIC SAFETY PROJECT
SELF-ANCHORED SUSPENSION BRIDGE
(SUPERSTRUCTURE & TOWER)

TEST RIG DETAILS NO. 10

Rev. Date: 5-15-98

ORIGINAL SCALE IN MILLIMETERS FOR REDUCED PLANS 0 10 20 30 40 50 60 70 80 90 100

CU 04
EA 0120F1

DISREGARD PRINTS BEARING EARLIER REVISION DATES 06/11/13

REVISION DATES (PRELIMINARY STAGE ONLY)

SHEET 171S10R1 OF

FILE => L:\BB\04-012001\SAS\Contract Plans and CCO\CCO\CCO-31452\1-Original 08-01-13\DGN\aksrr10.dgn

USERNAME => DMINROW DATE PLOTTED => 01 AUG 2013 TIME PLOTTED => 16:14:16

100 % PS&E

DIST.	COUNTY	ROUTE	KILOMETER POST TOTAL PROJECT	SHEET NO.	TOTAL SHEETS
04	SF	80	13.2/13.9	888511R1	1204

Caltrans Metric

REGISTERED ENGINEER - CIVIL

06-11-13
PLANS APPROVAL DATE

REGISTERED PROFESSIONAL ENGINEER Marwan N. Nader No. C 054426 Exp. 12/31/13 CIVIL STATE OF CALIFORNIA

The State of California or its officers or agents shall not be responsible for the accuracy or completeness of electronic copies of this plan sheet.

T.Y. LIN / MOFFATT & NICHOL
825 BATTERY STREET
SAN FRANCISCO, CA 94111

Caltrans now has a web site! To get to the web site, go to: http://www.dot.ca.gov

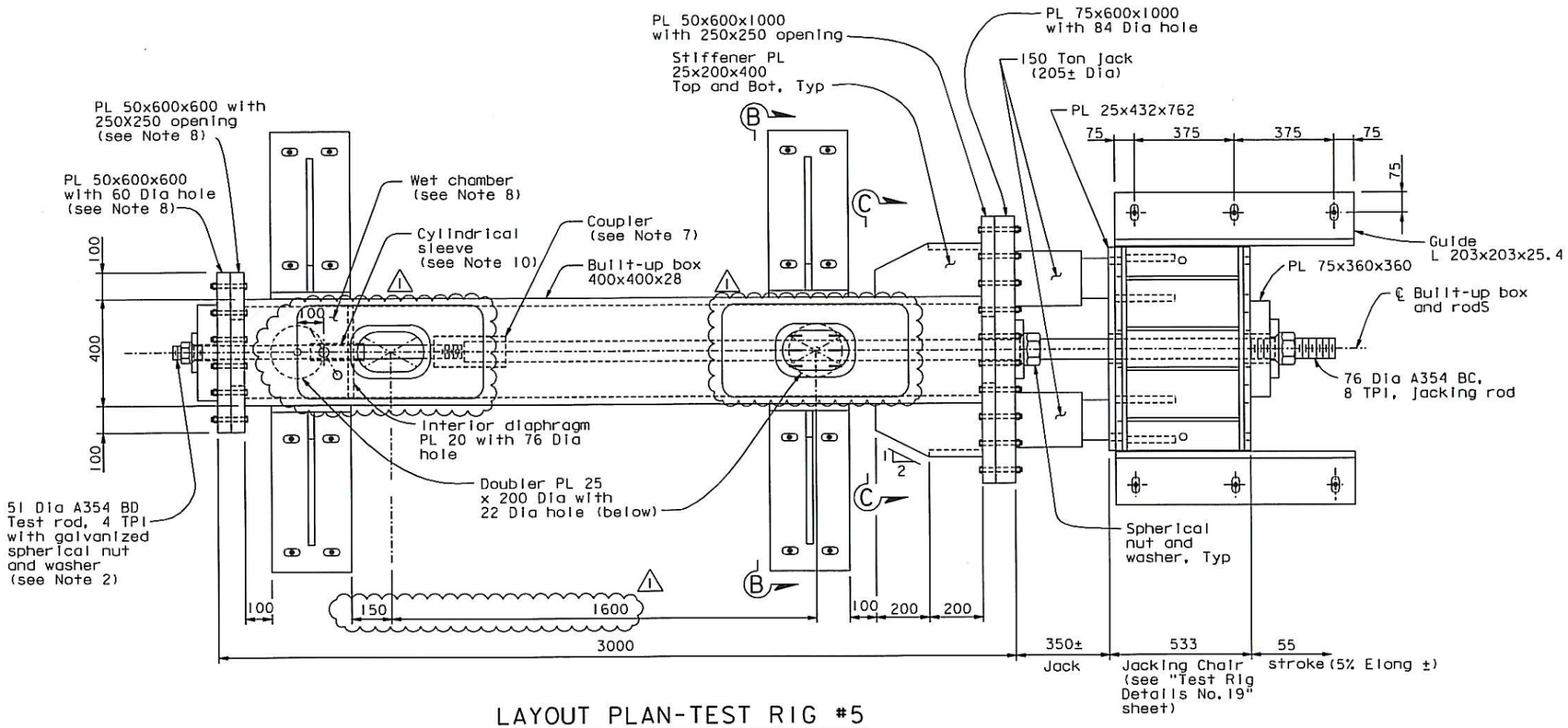

LAYOUT PLAN-TEST RIG #5

1:10

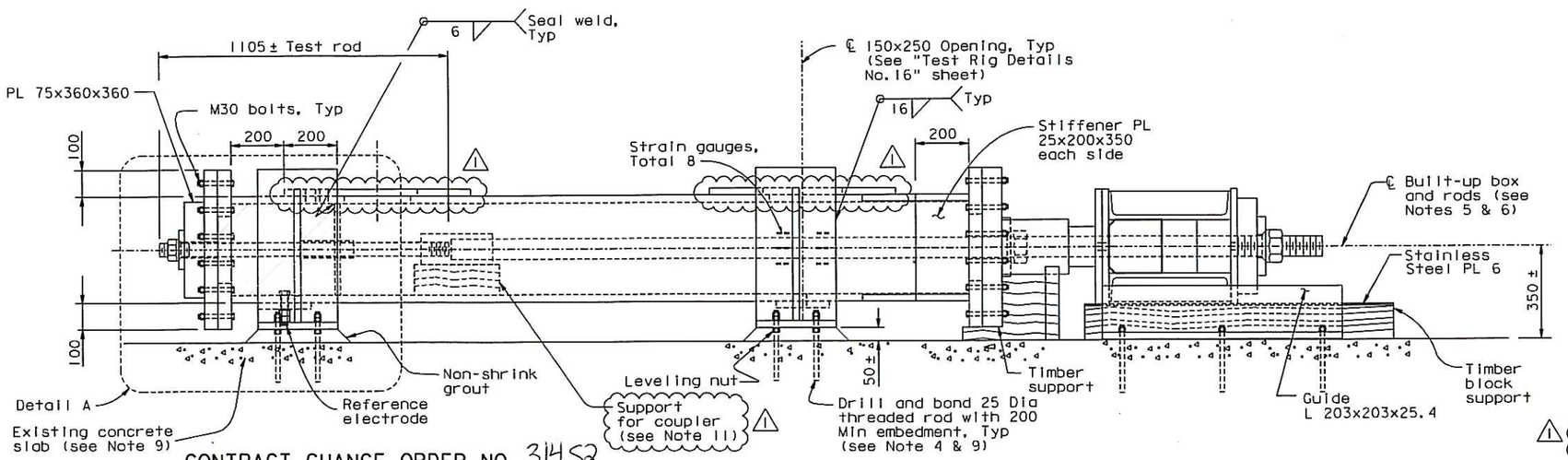

ELEVATION

1:10

NOTES:

1. For Detail A, Section B-B, and Section C-C, see "Test Rig Details No. 15" sheet.
2. Minimum of 75 mm of threads of the rod shall be submerged in the NaCl solution at the start of the test.
3. Built-up box 400x400x28 shall be used.
4. The drill and bond 25 Dia threaded rods shall have minimum allowable strength of 45 kN in tension and 30 kN in shear per threaded rod. Provide double nuts, snug-tight against steel plates.
5. Test assembly shall be placed level.
6. CL of built-up box and rods shall be aligned to within 4 mm.
7. For coupler detail, see "Test Rig Details No. 16" sheet.
8. All interior wetted surfaces of wet chambers, including inside of holes, shall be painted with two coats of epoxy based system or equivalent. Surface preparation and application procedure shall be per manufacturers' recommendations.
9. Existing concrete shall be 300 thick and shall have minimum strength of 14 MPa, confirm by testing of corings. In the event that foundation thickness or strength cannot be confirmed, reinforced concrete slab foundation shall be provided as shown on "Test Rig Details No. 21" sheet.
10. For cylindrical sleeve detail, see "Test Rig Details No. 16" sheet. Cylindrical sleeve shall be painted with two coats of epoxy based system or equivalent. Surface preparation and application procedure shall be per manufacturers' recommendations.
11. Contractor to propose material for Engineer's review and approval. Material shall be non-metallic and non-expanding in contact with water.

CONTRACT CHANGE ORDER NO. 31452
SHEET 3 OF 7

REQUESTS FOR INFORMATION NOT ADDRESSED IN THIS CCO REMAIN IN FORCE

ALL DIMENSIONS ARE IN MILLIMETERS UNLESS OTHERWISE SHOWN

MARK	DATE	DESCRIPTIONS	BY	CH'D	CCO#
1	08/01/13	REMOVE AND TEST SAMPLE RODS	CC	MN	31452
0	06/11/13	REMOVE, REPLACE, AND TEST SAMPLE RODS	CC	MN	31451

REVISIONS

A. Akinsanya / W. Long
DESIGN OVERSIGHT
SIGN OFF DATE 08/01/13

Rev. Date: 5-22-13

DESIGN	BY C. Chol	CHECKED	N. Vo
DETAILS	BY G. Mok	CHECKED	J. Denis
QUANTITIES	BY G. Mok	CHECKED	J. Denis

ORIGINAL SCALE IN MILLIMETERS FOR REDUCED PLANS 0 10 20 30 40 50 60 70 80 90 100

PREPARED FOR THE STATE OF CALIFORNIA DEPARTMENT OF TRANSPORTATION

N. Nader
PROJECT ENGINEER

CU 04
EA 0120F1

BRIDGE NO. 34-0006L/R
KILOMETER POST 13.2/13.9

DISREGARD PRINTS BEARING EARLIER REVISION DATES 06/11/13

SAN FRANCISCO OAKLAND BAY BRIDGE
EAST SPAN SEISMIC SAFETY PROJECT
SELF-ANCHORED SUSPENSION BRIDGE
(SUPERSTRUCTURE & TOWER)

TEST RIG DETAILS NO. 11

REVISION DATES (PRELIMINARY STAGE ONLY) | SHEET 171 OF 1204 | 88851IR1

FILE => I:\bb\04-012001\sas\contract plans and cco\cco\cco#31452\1-original 08-01-13\dgn\aksrr11.dgn

USERNAME => DWinrow DATE PLOTTED => 01 AUG 2013 TIME PLOTTED => 16:15:17

100 % PS&E

DIST.	COUNTY	ROUTE	KILOMETER POST TOTAL PROJECT	SHEET NO.	TOTAL SHEETS
04	SF	80	13.2/13.9	688512R1	1204

REGISTERED ENGINEER - CIVIL

06-11-13
PLANS APPROVAL DATE

REGISTERED PROFESSIONAL ENGINEER Marwan N. Nader No. C 054426 Exp. 12/31/13 CIVIL STATE OF CALIFORNIA

The State of California or its officers or agents shall not be responsible for the accuracy or completeness of electronic copies of this plan sheet.

T.Y. LIN / MOFFATT & NICHOL
825 BATTERY STREET
SAN FRANCISCO, CA 94111

Caltrans now has a web site! To get to the web site, go to: http://www.dot.ca.gov

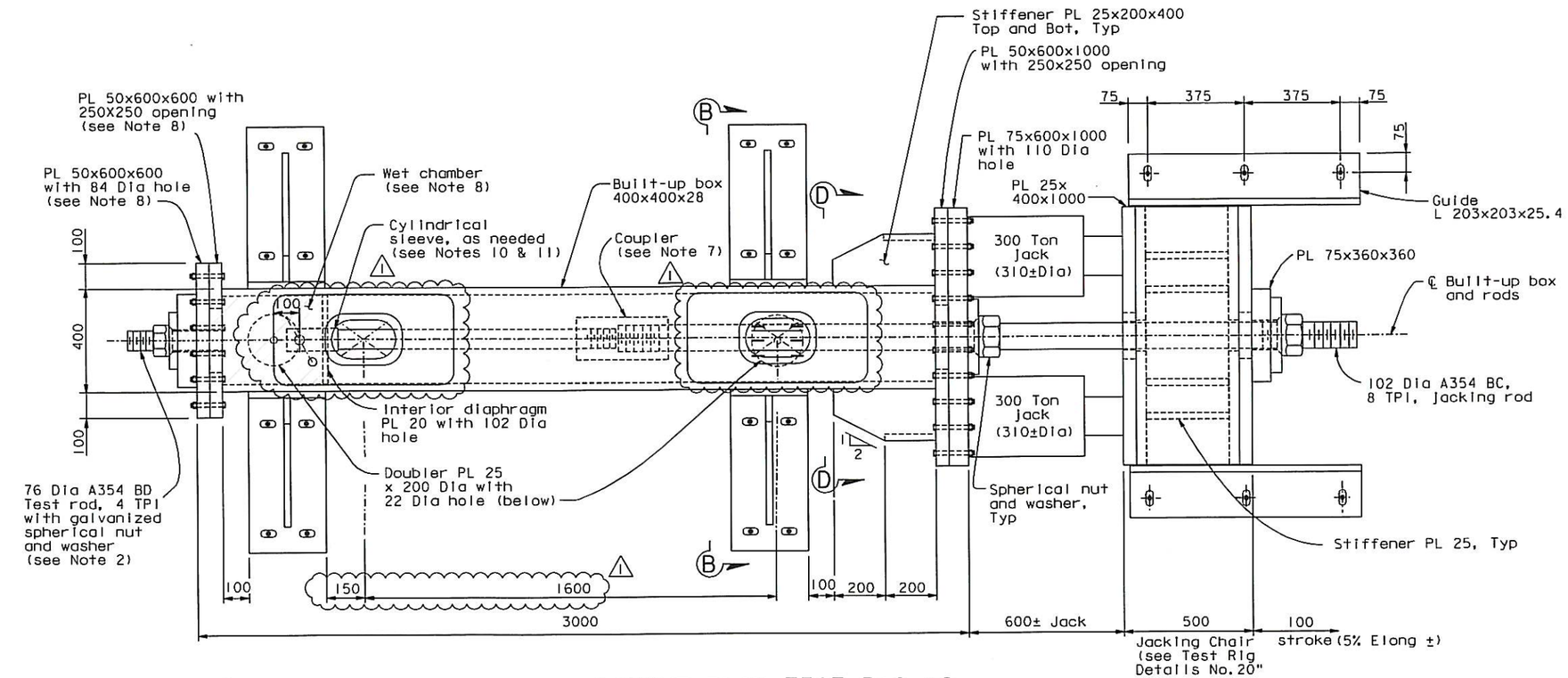

LAYOUT PLAN-TEST RIG #6

1:10

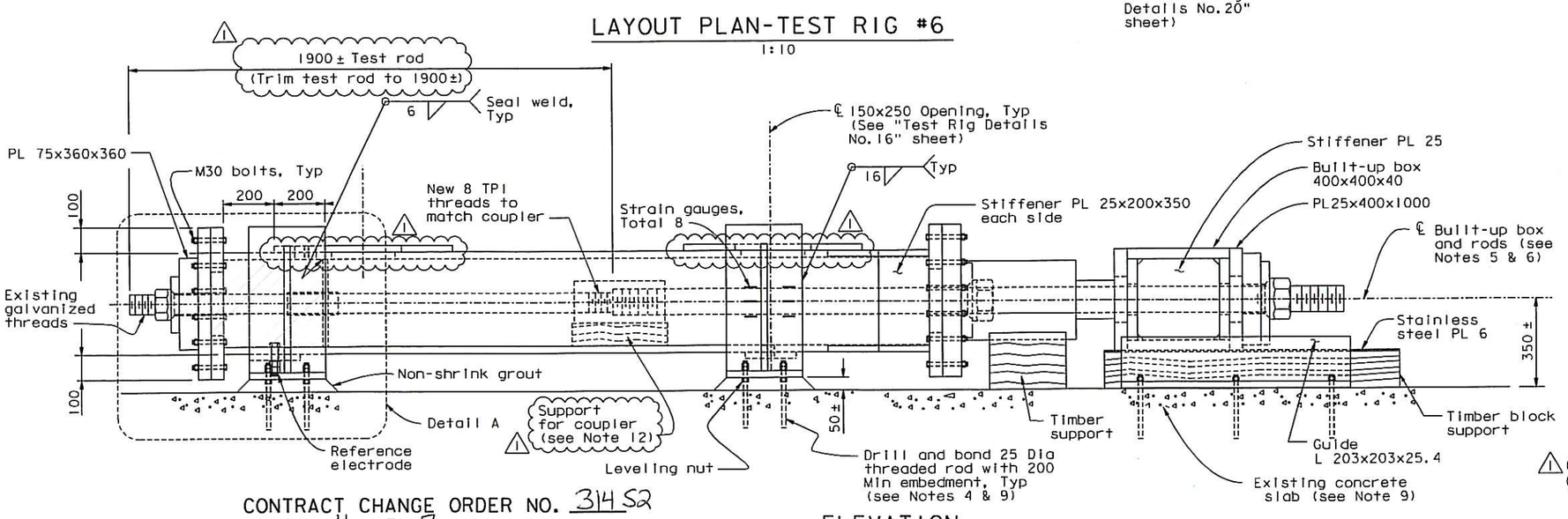

ELEVATION

1:10

NOTES:

1. For Detail A and Section B-B, see "Test Rig Details No. 15" sheet. For Section D-D, see "Test Rig Details No. 18" sheet.
2. Minimum of 75 mm of threads of the rod shall be submerged in the NaCl solution at the start of the test.
3. Built-up box 400x400x28 shall be used.
4. The drill and bond 25 Dia threaded rods shall have minimum allowable strength of 45 kN in tension and 30 kN in shear per threaded rod. Provide double nuts, snug-tight against steel plates.
5. Test assembly shall be placed level.
6. CL of built-up box and rods shall be aligned to within 4 mm.
7. For coupler detail, see "Test Rig Details No. 16" sheet.
8. All interior wetted surfaces of wet chambers, including inside of holes, shall be painted with two coats of epoxy based system or equivalent. Surface preparation and application procedure shall be per manufacturers' recommendations.
9. Existing concrete shall be 300 thick and shall have minimum strength of 14 MPa, confirm by testing of corings. In the event that foundation thickness or strength cannot be confirmed, reinforced concrete slab foundation shall be provided as shown on "Test Rig Details No. 21" sheet.
10. Install cylindrical sleeve if threads extend to interior diaphragm.
11. For cylindrical sleeve details, see "Test Rig Details No. 16" sheet. Cylindrical sleeve shall be painted with two coats of epoxy based system or equivalent. Surface preparation and application procedure shall be per manufacturers' recommendations.
12. Contractor to propose material for Engineer's review and approval. Material shall be non-metallic and non-expanding in contact with water.

CONTRACT CHANGE ORDER NO. 314S2
SHEET 4 OF 7

REQUESTS FOR INFORMATION NOT ADDRESSED IN THIS CCO REMAIN IN FORCE

ALL DIMENSIONS ARE IN MILLIMETERS UNLESS OTHERWISE SHOWN

MARK	DATE	DESCRIPTIONS	BY	CH'D	CCO#
1	08/01/13	REMOVE AND TEST SAMPLE RODS	CC	MN	314S2
0	06/11/13	REMOVE, REPLACE, AND TEST SAMPLE RODS	CC	MN	314S1

REVISIONS

A. Akinsanya / W. Long
DESIGN OVERSIGHT
SIGN OFF DATE 08/01/13

Rev. Date: 5-22-13

	BY	CHECKED	
DESIGN	C. Chol	N. Vo	
DETAILS	G. Mok	J. Denis	
QUANTITIES	G. Mok	J. Denis	

PREPARED FOR THE STATE OF CALIFORNIA DEPARTMENT OF TRANSPORTATION

M. Nader
PROJECT ENGINEER

BRIDGE NO. 34-0006L/R
KILOMETER POST 13.2/13.9

SAN FRANCISCO OAKLAND BAY BRIDGE
EAST SPAN SEISMIC SAFETY PROJECT
SELF-ANCHORED SUSPENSION BRIDGE
(SUPERSTRUCTURE & TOWER)

TEST RIG DETAILS NO. 12

ORIGINAL SCALE IN MILLIMETERS FOR REDUCED PLANS 0 10 20 30 40 50 60 70 80 90 100

DISREGARD PRINTS BEARING EARLIER REVISION DATES 06/11/13

REVISION DATES (PRELIMINARY STAGE ONLY)

SHEET 171S12R1 OF

CU 04
EA 0120F1

FILE => I:\bb\04-012001\sas\contract plans and cco\cco\cco*314s2\1-original 08-01-13\dgn\aksrr12.dgn

USERNAME => DWinrow DATE PLOTTED => 01 AUG 2013 TIME PLOTTED => 16:15:52

100 % PS&E

DIST.	COUNTY	ROUTE	KILOMETER POST TOTAL PROJECT	SHEET NO.	TOTAL SHEETS
04	SF	80	13.2/13.9	888513R1	1204

Caltrans Metric

REGISTERED ENGINEER - CIVIL

06-11-13
PLANS APPROVAL DATE

REGISTERED PROFESSIONAL ENGINEER Marwan N. Nader No. C 054426 Exp. 12/31/13 CIVIL STATE OF CALIFORNIA

The State of California or its officers or agents shall not be responsible for the accuracy or completeness of electronic copies of this plan sheet.

T.Y. LIN / MOFFATT & NICHOL
B25 BATTERY STREET
SAN FRANCISCO, CA 94111

Caltrans now has a web site! To get to the web site, go to: http://www.dot.ca.gov

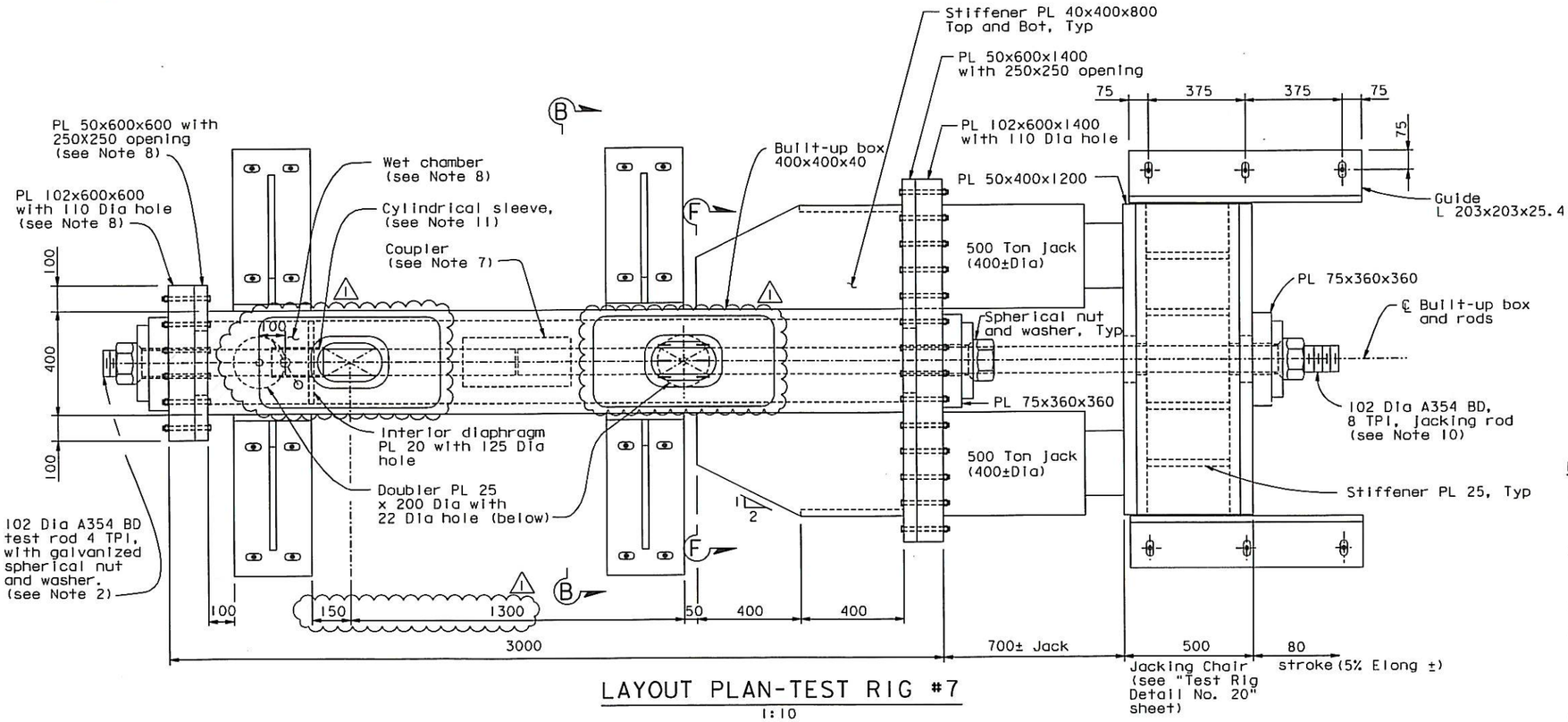

LAYOUT PLAN-TEST RIG #7
1:10

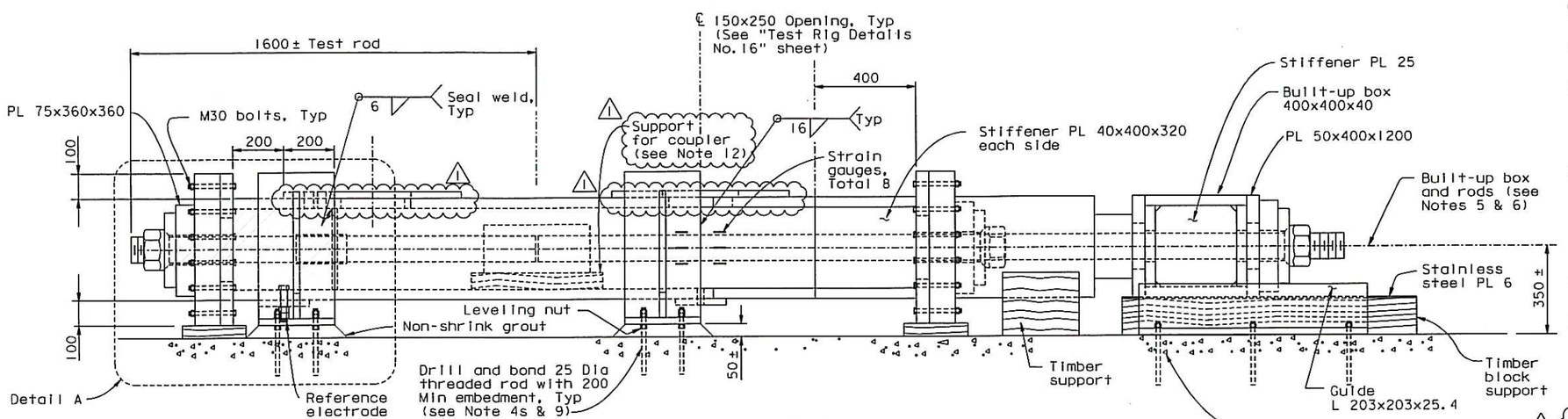

ELEVATION
1:10

NOTES:

1. For Detail A and Section B-B, see "Test Rig Details No. 15" sheet. For Section F-F, see "Test Rig Details No. 18" sheet.
2. Minimum of 75 mm of threads of the rod shall be submerged in the NaCl solution at the start of the test.
3. Built-up box 400x400x40 shall be used.
4. The drill and bond 25 Dia threaded rods shall have minimum allowable strength of 45 kN in tension and 30 kN in shear per threaded rod. Provide double nuts, snug-tight against steel plates.
5. Test assembly shall be placed level.
6. CL of built-up box and rods shall be aligned to within 4 mm.
7. For coupler detail, see "Test Rig Details No. 16" sheet.
8. All interior wetted surfaces of wet chambers, including inside of holes, shall be painted with two coats of epoxy based system or equivalent. Surface preparation and application procedure shall be per manufacturers' recommendations.
9. Existing concrete shall be 300 thick and shall have minimum strength of 14 MPa, confirm by testing of corings. In the event that foundation thickness or strength cannot be confirmed, reinforced concrete slab foundation shall be provided as shown on "Test Rig Details No. 21" sheet.
10. Provide mill certificate showing Fy of Jacking rod to be greater than Fy of test specimen by 10%.
11. For cylindrical sleeve details, see "Test Rig Details No. 16" sheet. Cylindrical sleeve shall be painted with two coats of epoxy based system or equivalent. Surface preparation and application procedure shall be per manufacturers' recommendations.
12. Contractor to propose material for Engineer's review and approval. Material shall be non-metallic and non-expanding in contact with water.

CONTRACT CHANGE ORDER NO. 314S2
SHEET 5 OF 7

REQUESTS FOR INFORMATION NOT ADDRESSED IN THIS CCO REMAIN IN FORCE

ALL DIMENSIONS ARE IN MILLIMETERS UNLESS OTHERWISE SHOWN

MARK	DATE	DESCRIPTIONS	BY	CH'D	CCO#
1	08/01/13	REMOVE AND TEST SAMPLE RODS	CC	MN	314S2
0	06/11/13	REMOVE, REPLACE, AND TEST SAMPLE RODS	CC	MN	314S1

REVISIONS

A. Akinsanya / W. Long
DESIGN OVERSIGHT
SIGN OFF DATE 08/01/13

	BY	CHECKED
DESIGN	C. Chol	N. Vo
DETAILS	G. Mok	J. Denis
QUANTITIES	G. Mok	J. Denis

PREPARED FOR THE STATE OF CALIFORNIA DEPARTMENT OF TRANSPORTATION

M. Nader
PROJECT ENGINEER

BRIDGE NO. 34-0006L/R
KILOMETER POST 13.2/13.9

SAN FRANCISCO OAKLAND BAY BRIDGE
EAST SPAN SEISMIC SAFETY PROJECT
SELF-ANCHORED SUSPENSION BRIDGE
(SUPERSTRUCTURE & TOWER)

TEST RIG DETAILS NO. 13

Rev. Date: 5-22-13

ORIGINAL SCALE IN MILLIMETERS FOR REDUCED PLANS 0 10 20 30 40 50 60 70 80 90 100

CU 04
EA 0120F1

DISREGARD PRINTS BEARING EARLIER REVISION DATES 06/11/13

REVISION DATES (PRELIMINARY STAGE ONLY)

SHEET 471S13R1 OF

FILE => I:\bb\04-012001\sas\contract plans and cco\cco\cco=314s2\1-original 08-01-13\dgn\aksrr13.dgn

USERNAME => DWinrow DATE PLOTTED => 01 AUG 2013 TIME PLOTTED => 16:16:24

100 % PS&E

DIST.	COUNTY	ROUTE	KILOMETER POST TOTAL PROJECT	SHEET NO.	TOTAL SHEETS
04	SF	80	13.2/13.9	888514R1	1204

REGISTERED ENGINEER - CIVIL

06-11-13

PLANS APPROVAL DATE

REGISTERED PROFESSIONAL ENGINEER Marwan N. Nader No. C 054426 Exp. 12/31/13 CIVIL STATE OF CALIFORNIA

The State of California or its officers or agents shall not be responsible for the accuracy or completeness of electronic copies of this plan sheet.

T.Y. LIN / MOFFATT & NICHOL
825 BATTERY STREET
SAN FRANCISCO, CA 94111

Caltrans now has a web site! To get to the web site, go to: http://www.dot.ca.gov

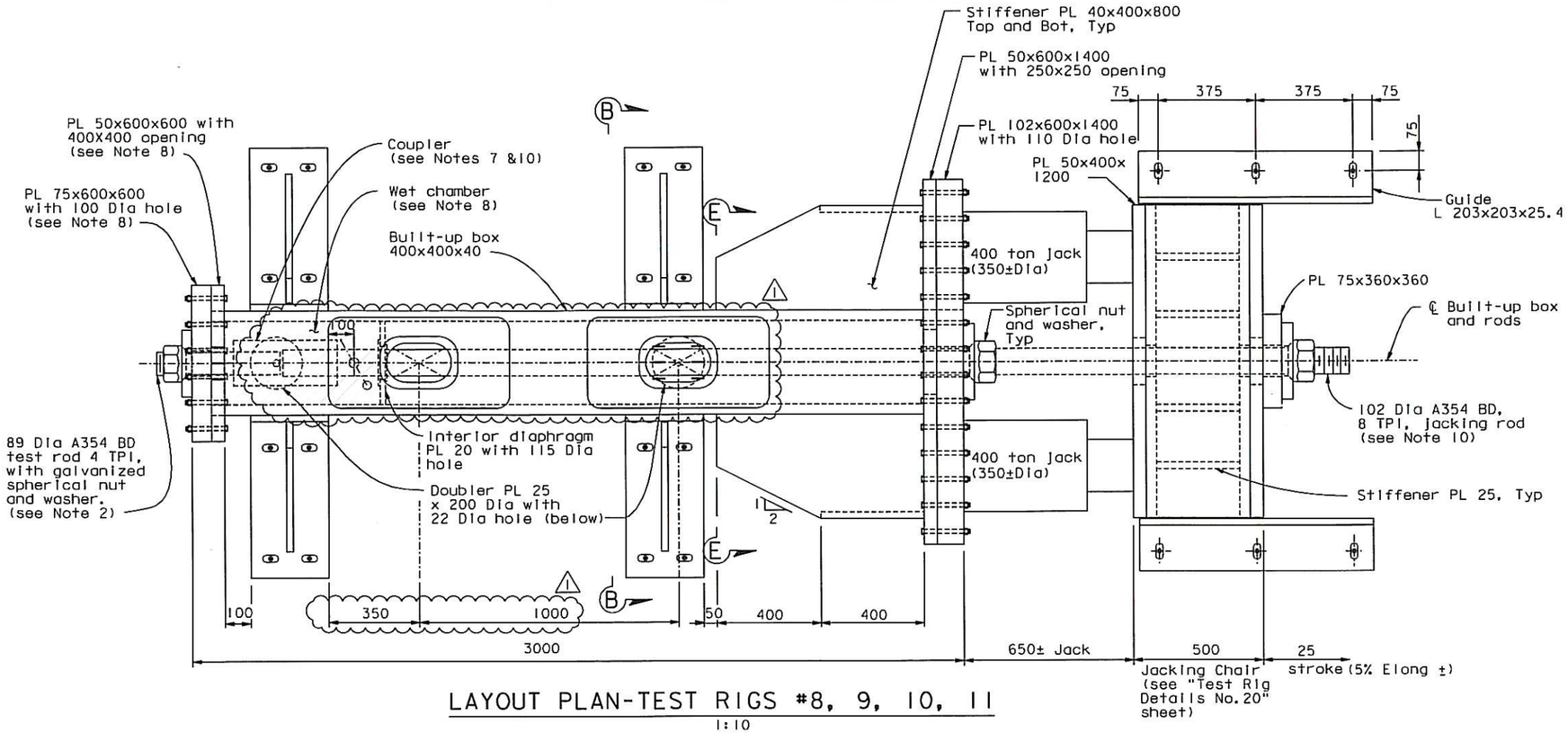

LAYOUT PLAN-TEST RIGS #8, 9, 10, 11

1:10

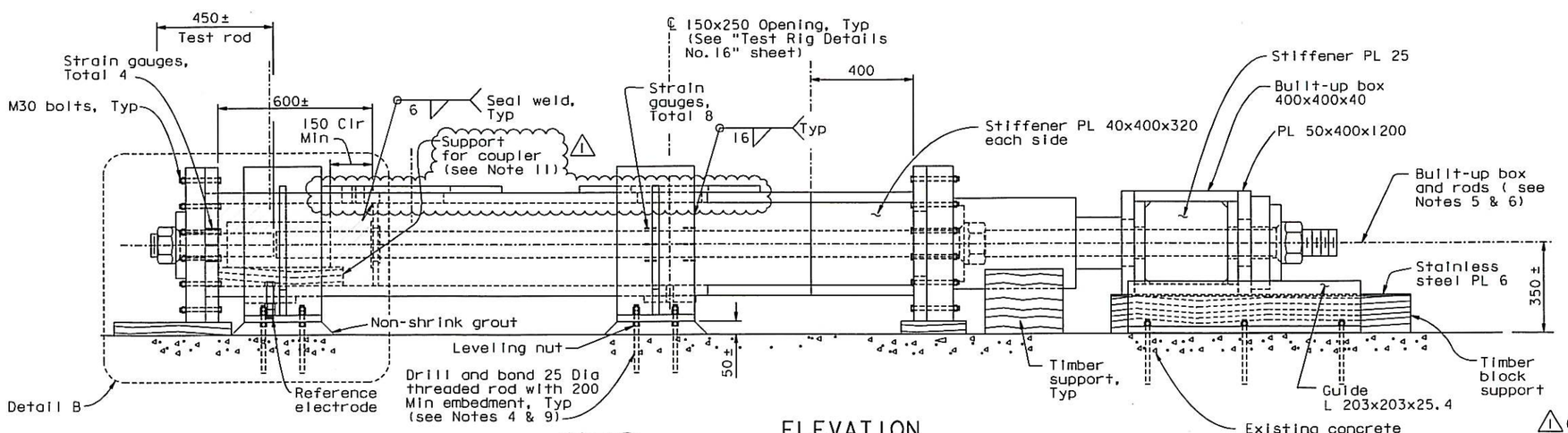

ELEVATION

1:10

NOTES:

1. For Section B-B, see "Test Rig Details No. 15" sheet. For Detail B, see "Test Rig Details No. 17" sheet. For "Section E-E, see "Test Rig Details No. 18" sheet.
2. Minimum of 75 mm of threads of the rod shall be submerged in the NaCl solution at the start of the test.
3. Built-up box 400x400x40 shall be used.
4. The drill and bond 25 Dia threaded rods shall have minimum allowable strength of 45 kN in tension and 30 kN in shear per threaded rod. Provide double nuts, snug-tight against steel plates.
5. Test assembly shall be placed level.
6. CL of built-up box and rods shall be aligned to within 4 mm.
7. For coupler detail, see "Test Rig Details No. 16" sheet.
8. All interior wetted surfaces of wet chambers, including inside of holes, shall be painted with two coats of epoxy based system or equivalent. Surface preparation and application procedure shall be per manufacturers' recommendations.
9. Existing concrete shall be 300 thick and shall have minimum strength of 14 MPa, confirm by testing of corings. In the event that foundation thickness or strength cannot be confirmed, reinforced concrete slab foundation shall be provided as shown on "Test Rig Details No. 21" sheet.
10. Coupler and portion of jacking rod submerged in NaCl solution shall be painted with two coats of epoxy based system or equivalent. Surface preparation and application procedure shall be per manufacturers' recommendations.
11. Contractor to propose material for Engineer's review and approval. Material shall be non-metallic and non-expanding in contact with water.

100 % PS&E

CONTRACT CHANGE ORDER NO. 31452
SHEET 6 OF 7

REQUESTS FOR INFORMATION NOT ADDRESSED IN THIS CCO REMAIN IN FORCE

ALL DIMENSIONS ARE IN MILLIMETERS UNLESS OTHERWISE SHOWN

MARK	DATE	DESCRIPTIONS	BY	CH'D	CCO#
1	08/01/13	REMOVE AND TEST SAMPLE RODS	CC	MN	31452
0	06/11/13	REMOVE, REPLACE, AND TEST SAMPLE RODS	CC	MN	31451

REVISIONS

A. Akinsanya / W. Long
DESIGN OVERSIGHT
SIGN OFF DATE 08/01/13

Rev. Date: 5-22-13

	BY	CHECKED
DESIGN	C. Choi	N. Vo
DETAILS	G. Mok	J. Denis
QUANTITIES	G. Mok	J. Denis

PREPARED FOR THE STATE OF CALIFORNIA DEPARTMENT OF TRANSPORTATION

M. Nader
PROJECT ENGINEER

BRIDGE NO. 34-0006L/R
KILOMETER POST 13.2/13.9

SAN FRANCISCO OAKLAND BAY BRIDGE
EAST SPAN SEISMIC SAFETY PROJECT
SELF-ANCHORED SUSPENSION BRIDGE
(SUPERSTRUCTURE & TOWER)

TEST RIG DETAILS NO. 14

ORIGINAL SCALE IN MILLIMETERS FOR REDUCED PLANS 0 10 20 30 40 50 60 70 80 90 100

CU 04
EA 0120F1

DISREGARD PRINTS BEARING EARLIER REVISION DATES 06/11/13

REVISION DATES (PRELIMINARY STAGE ONLY)

SHEET 471 OF 514R1

FILE => I:\bb\04-012001\sas\contract plans and cco\cco\cco#31452\1-original 08-01-13\dgn\aksrr14.dgn

USERNAME => DWinrow DATE PLOTTED => 01 AUG 2013 TIME PLOTTED => 16:17:06

DIST.	COUNTY	ROUTE	KILOMETER POST TOTAL PROJECT	SHEET NO.	TOTAL SHEETS
04	SF	80	13.2/13.9	888S16R1	1204

REGISTERED ENGINEER - CIVIL

06-11-13
PLANS APPROVAL DATE

PROFESSIONAL ENGINEER — REGISTERED — Marwan N. Nader — No. C 054426 — Exp. 12/31/13 — CIVIL — STATE OF CALIFORNIA

The State of California or its officers or agents shall not be responsible for the accuracy or completeness of electronic copies of this plan sheet.

T.Y. LIN / MOFFATT & NICHOL
825 BATTERY STREET
SAN FRANCISCO, CA 94111

Caltrans now has a web site! To get to the web site, go to: http://www.dot.ca.gov

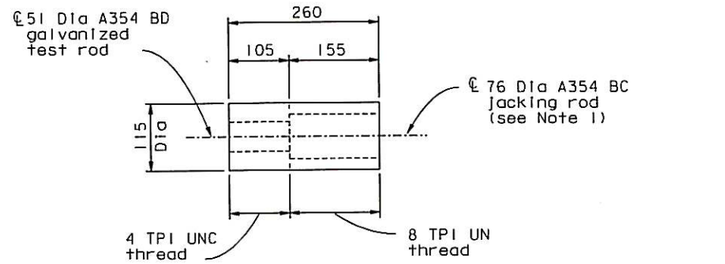

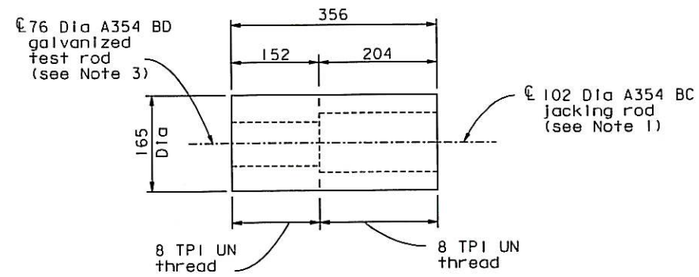

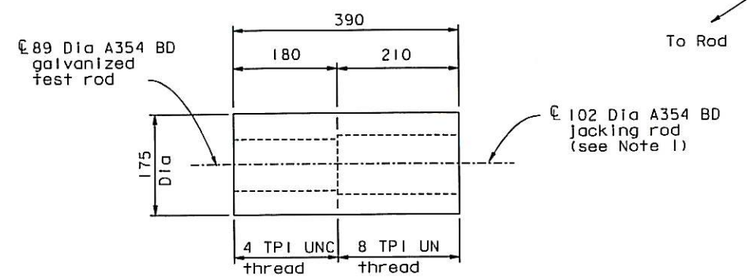

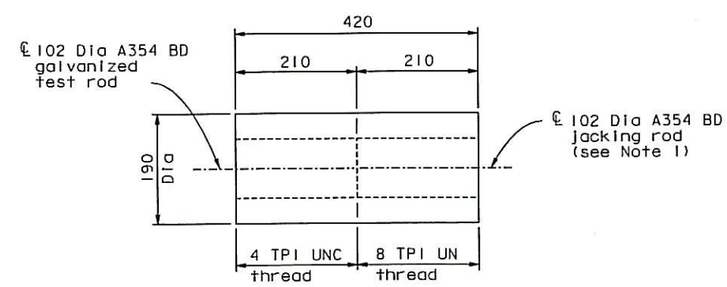

COUPLER DETAILS
1:5

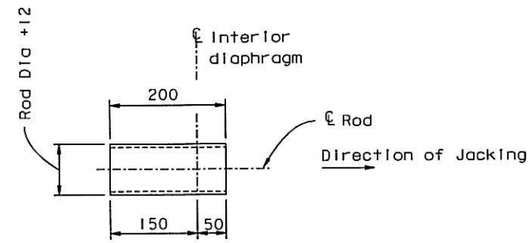

CYLINDRICAL SLEEVE DETAIL (See Notes 4 & 5)
1:5

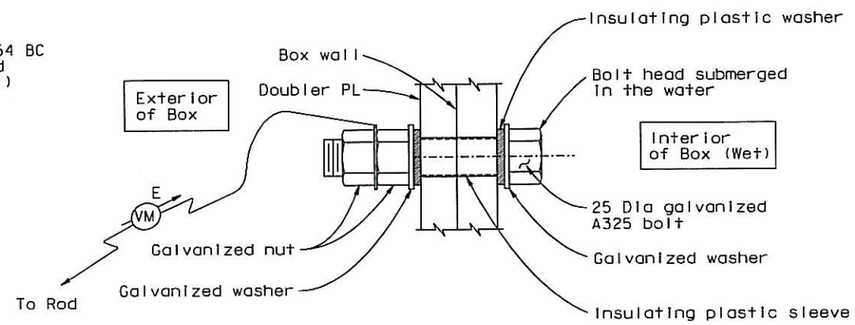

REFERENCE ELECTRODE DETAIL
1:2

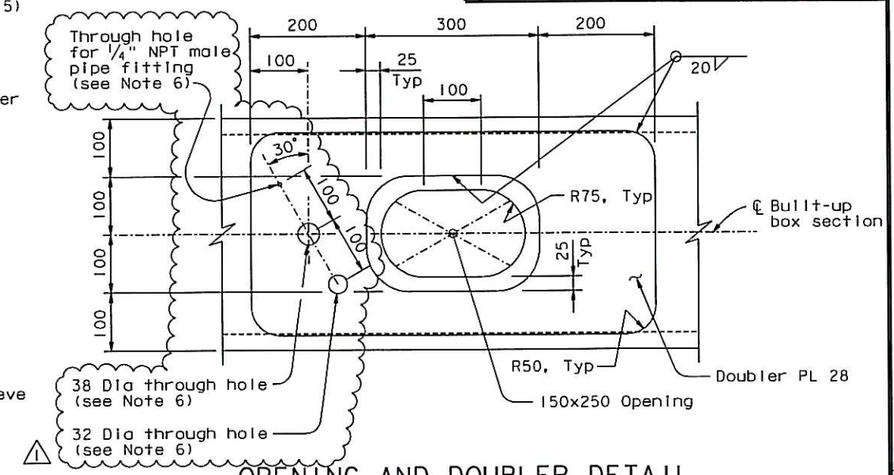

OPENING AND DOUBLER DETAIL
1:5

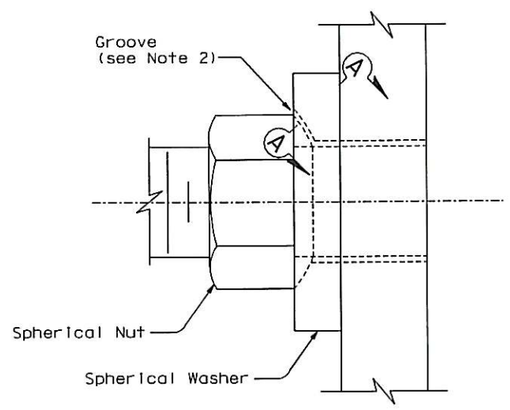

GROOVE DETAIL
1:2

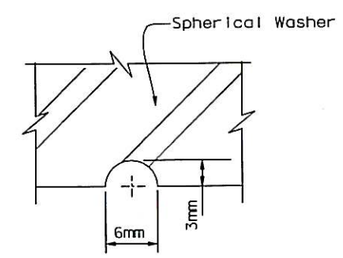

SECTION A-A
NTS

NOTES:

1. Coupler and jacking rod shall be fabricated from AISI 4340 materials, with mechanical properties conforming to ASTM A354 BC. Tapping of the coupler threads shall account for the thickness of galvanizing on the test rods.
2. Groove shall be used to confirm an outflow of NaCl solution through the threads. Upon confirmation, seal groove with closed cell backer rod, plumber putty or similar material.
3. New threads at this end of test rod shall not be galvanized.
4. Cylindrical sleeve shall be fabricated from AISI 1010 material. Inside of sleeve shall be tapped to be compatible with the threaded rod.
5. Apply plumber dope or equivalent to seal threads against leaks. Submit product for review and approval by the Engineer.
6. Holes required at wet chambers only. For locations, see "Test Rig Details No. 11 thru No. 14" sheets. (1)

CONTRACT CHANGE ORDER NO. 31452
SHEET 7 OF 7

REQUESTS FOR INFORMATION NOT ADDRESSED IN THIS CCO REMAIN IN FORCE

ALL DIMENSIONS ARE IN MILLIMETERS UNLESS OTHERWISE SHOWN

MARK	DATE	DESCRIPTIONS	BY	CH'D	CCO#
1	08/01/13	REMOVE AND TEST SAMPLE RODS	CC	MN	31452
0	06/11/13	REMOVE, REPLACE, AND TEST SAMPLE RODS	CC	MN	31451

REVISIONS

A. Akinsanya / W. Long
DESIGN OVERSIGHT
SIGN OFF DATE 08/01/13

Rev. Date: 5-22-13

DESIGN	BY C. Chol	CHECKED	N. Vo
DETAILS	BY G. Mok	CHECKED	J. Denis
QUANTITIES	BY G. Mok	CHECKED	J. Denis

PREPARED FOR THE STATE OF CALIFORNIA DEPARTMENT OF TRANSPORTATION

M. Nader
PROJECT ENGINEER

CU 04
EA 0120F1

BRIDGE NO. 34-0006L/R
KILOMETER POST 13.2/13.9

DISREGARD PRINTS BEARING EARLIER REVISION DATES → 06/11/13

ORIGINAL SCALE IN MILLIMETERS FOR REDUCED PLANS 0 10 20 30 40 50 60 70 80 90 100

SAN FRANCISCO OAKLAND BAY BRIDGE
EAST SPAN SEISMIC SAFETY PROJECT
SELF-ANCHORED SUSPENSION BRIDGE
(SUPERSTRUCTURE & TOWER)

TEST RIG DETAILS NO. 16

REVISION DATES (PRELIMINARY STAGE ONLY) | SHEET 171 OF 516R1

FILE => I:\bb\04-012001\sas\contract plans and cco\cco\cco#31452\1-original 08-01-13\dgn\aksrr16.dgn

100% PS&E

USERNAME => DMinrow DATE PLOTTED => 01 AUG 2013 TIME PLOTTED => 16:17:53