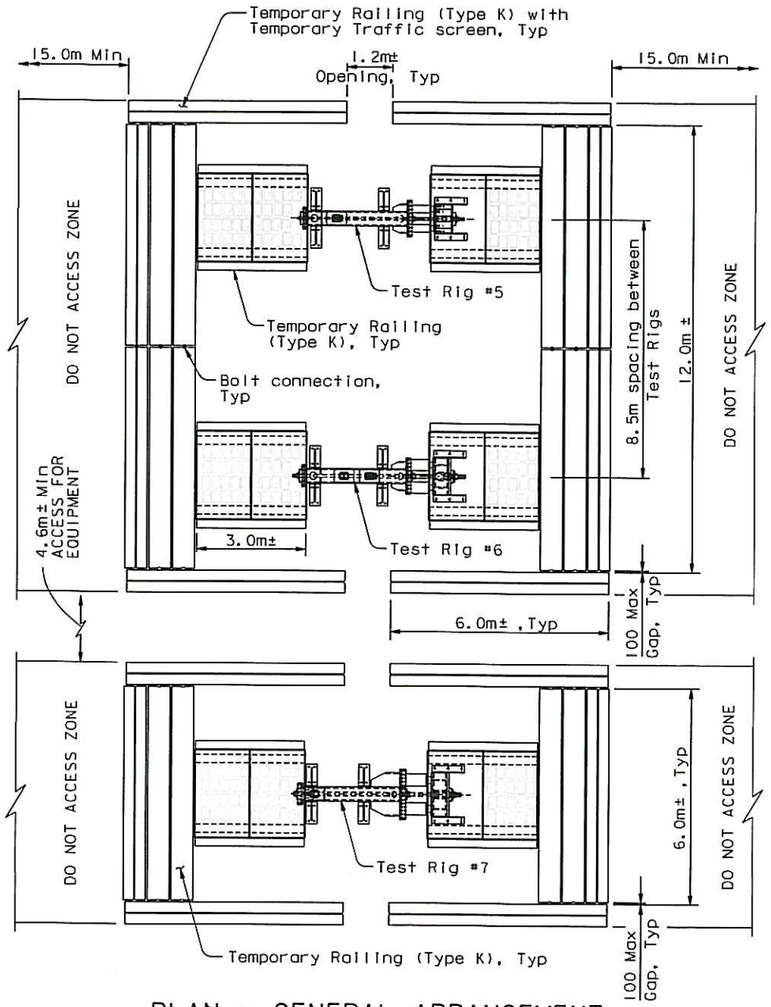

PLAN - GENERAL ARRANGEMENT

1:80

Test Rig #	Test Specimen	Nominal Bolt Dia	Approx. Specimen Length
5	Pier E2 Bearing Bolts-Top Housing	51	1105±
6	Tower Anchorage Anchor Bolts	76	2130±
7	Tower Saddle Tie Rods	102	1600±
8, 9	PWS Strand Anchor Rod-Main Cable (roller thread)	89	450±
10, 11	PWS Strand Anchor Rod-Main Cable (cut thread)	89	450±

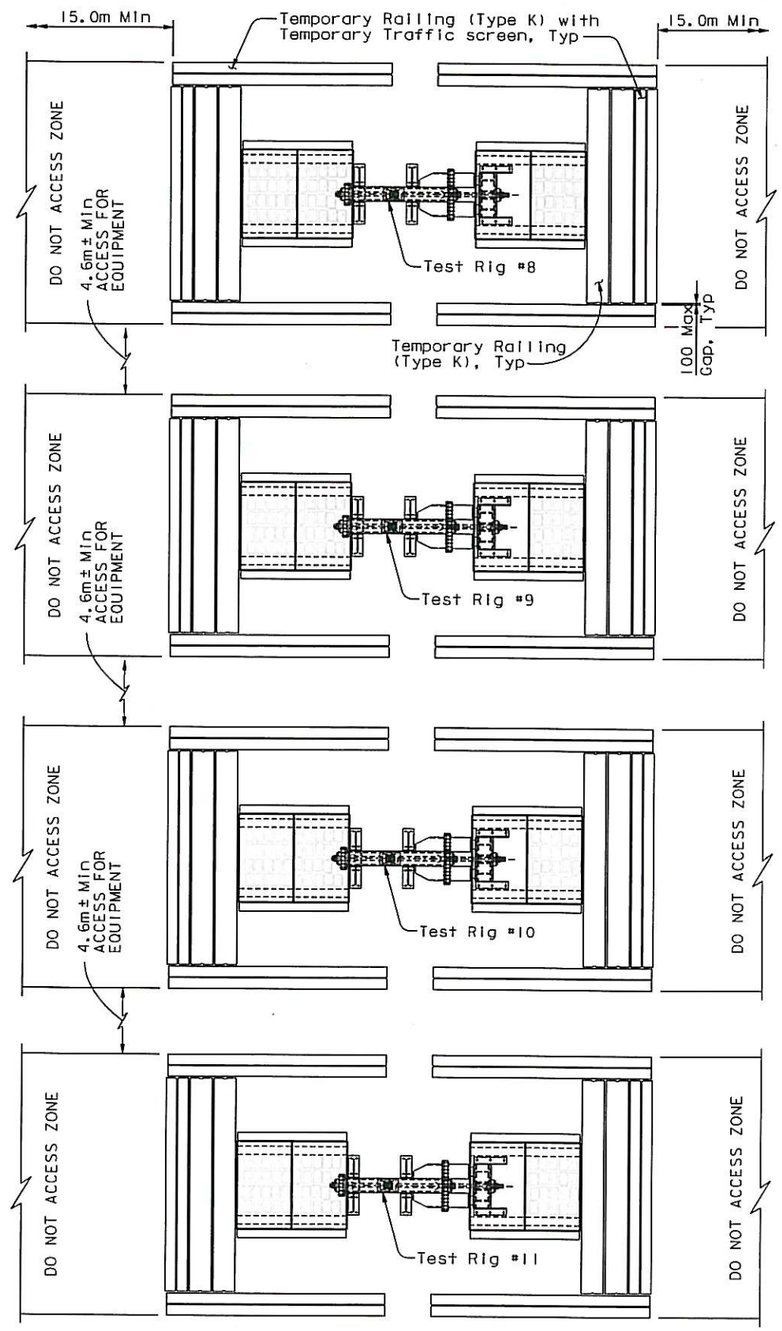

CONTRACT CHANGE ORDER NO. 31451
SHEET 2 OF 18

REQUESTS FOR INFORMATION NOT ADDRESSED IN THIS CCO REMAIN IN FORCE

Caltrans Metric

DIST.	COUNTY	ROUTE	KILOMETER POST TOTAL PROJECT	SHEET NO.	TOTAL SHEETS
04	SF	80	13.2/13.9	88859	1204

REGISTERED ENGINEER - CIVIL
06-11-13
PLANS APPROVAL DATE
REGISTERED PROFESSIONAL ENGINEER Marwan N. Nader No. C 054426 Exp. 12/31/13 CIVIL STATE OF CALIFORNIA

The State of California or its officers or agents shall not be responsible for the accuracy or completeness of electronic copies of this plan sheet.

T.Y. LIN / MOFFATT & NICHOL
825 BATTERY STREET
SAN FRANCISCO, CA 94111

Caltrans now has a web site! To get to the web site, go to: http://www.dot.ca.gov

GENERAL NOTES:

PRE-FABRICATION INSPECTION:

Prior to fabrication of the test rig, existing built-up box sections and existing jacking chairs shall be inspected for:

a. Surface damage/ defects on structural steel.

b. All fillet and PJP welds shall be 100% VT and 100% MT.

c. All CJP welds shall be 100% VT, 100% MT, and 100% UT.

d. Lamellar tearing at weld joints for existing 400x400x40 built-up box sections.

e. Geometric tolerance shall conform to the requirements of the AISC Code of Standard Practice, Section 6.4; as well as the requirements in AWS D1.1, Section 5.23, as applicable. Twist of existing built-up box sections shall not exceed 0.002 radians per meter of length or 0.005 radians in overall length, whichever is less.

Weld acceptance criteria shall be that specified in AWS D1.1 for statically loaded, non-tubular connections.

Existing built-up box sections and existing jacking chairs with damage/defects or do not meet the requirements above are not permitted to be used in the fabrication of the test rig. It is acceptable to repair the existing built-up box sections and existing jacking chairs to meet the requirements.

STRUCTURAL STEEL:

Unless noted otherwise:

1. New structural steel shall conform to ASTM A572 Grade 50 (Fy=345 MPa).

2 Structural steel with welded connections shall meet minimum CVN of 27 J @ 21C.

3. Bolts for structural steel shall conform to ASTM A325M. All bolts and bolt holes may be substituted with imperial sizes of larger diameter. Bolted connections shall conform to the requirements in the Research Council on Structural Connections, "Specification for Structural Joints Usings ASTM A325 or A490 Bolts," 2004 (RCSC Specification)

4. Bolts shall have threads excluded from shear plane. Faying surfaces shall be Class A or above.

5. Welding shall be in accordance with AWS D1.1/ D1.1M: 2002.

6. Deposited weld filler material shall meet minimum CVN of 27 J @ -20C.

7. Filler material shall have 483 MPa tensile strength minimum.

8. All fillet and PJP welds shall be 100% VT and 100% MT.

9. Weld acceptance criteria shall be that specified in AWS D1.1 for statically loaded, non-tubular connections.

10. Geometric tolerance shall conform to the requirements of the AISC Code of Standard Practice, Section 6.4; as well as the requirements in AWS D1.1, Section 5.23, as applicable.

ALL DIMENSIONS ARE IN MILLIMETERS UNLESS OTHERWISE SHOWN

A. Akinsanya / W. Long
DESIGN OVERSIGHT
SIGN OFF DATE 06/11/13
Rev. Date: 5-18-98

MARK	DATE	DESCRIPTIONS	BY	CH'D	CCO#
0	06/11/13	REMOVE, REPLACE, AND TEST SAMPLE RODS	CC	MN	31451

REVISIONS

DESIGN	BY C. Choi	CHECKED	N. Vo	
DETAILS	BY G. Mok	CHECKED	J. Denis	
QUANTITIES	BY G. Mok	CHECKED	J. Denis	

PREPARED FOR THE STATE OF CALIFORNIA DEPARTMENT OF TRANSPORTATION

M. Nader
PROJECT ENGINEER

BRIDGE NO. 34-0006L/R
KILOMETER POST 13.2/13.9

SAN FRANCISCO OAKLAND BAY BRIDGE
EAST SPAN SEISMIC SAFETY PROJECT
SELF-ANCHORED SUSPENSION BRIDGE
(SUPERSTRUCTURE & TOWER)

TEST RIG DETAILS NO. 9

ORIGINAL SCALE IN MILLIMETERS FOR REDUCED PLANS 0 10 20 30 40 50 60 70 80 90 100

CU 04
EA 0120F1

DISREGARD PRINTS BEARING EARLIER REVISION DATES

REVISION DATES (PRELIMINARY STAGE ONLY) 06/11/13

SHEET 471S9 OF

FILE => L:\BB\04-012001\SAS\Contract Plans and CCO\CCO\CCO=31451\1-Original 06-11-13\DGN\aksrr09.dgn

100 % PS&E

USERNAME => crivera DATE PLOTTED => 18 JUN 2013 TIME PLOTTED => 13:36:49

DIST.	COUNTY	ROUTE	KILOMETER POST TOTAL PROJECT	SHEET NO.	TOTAL SHEETS
04	SF	80	13.2/13.9	888510	1204

REGISTERED ENGINEER - CIVIL

06-11-13

PLANS APPROVAL DATE

REGISTERED PROFESSIONAL ENGINEER Marwan N. Nader No. C 054426 Exp. 12/31/13 CIVIL STATE OF CALIFORNIA

The State of California or its officers or agents shall not be responsible for the accuracy or completeness of electronic copies of this plan sheet.

T.Y. LIN / MOFFATT & NICHOL
825 BATTERY STREET
SAN FRANCISCO, CA 94111

Caltrans now has a web site! To get to the web site, go to: http://www.dot.ca.gov

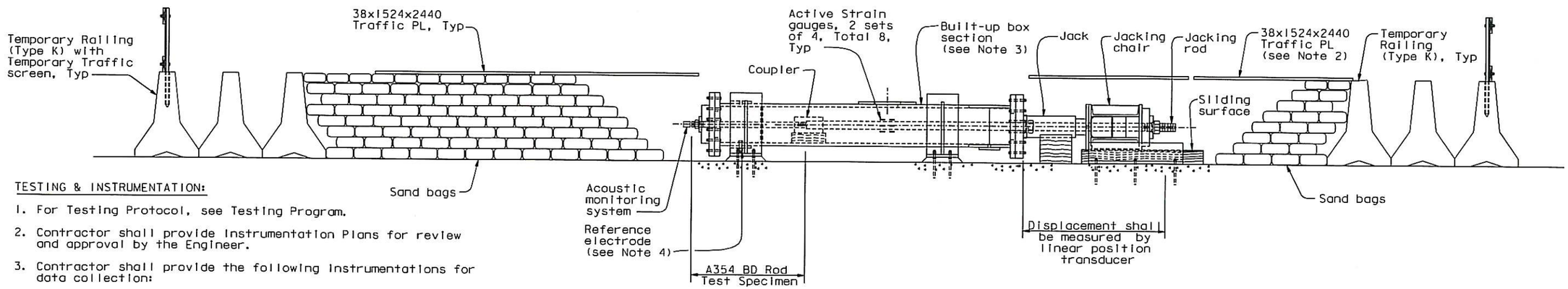

ELEVATION - TEST SET UP

NTS
(Test Rig No. 5 shown, others similar)

TESTING & INSTRUMENTATION:

1. For Testing Protocol, see Testing Program.
2. Contractor shall provide Instrumentation Plans for review and approval by the Engineer.
3. Contractor shall provide the following Instrumentations for data collection:
   a. Acoustic monitoring - Micro II Digital AE System with R15I-AST model AE sensor, or equivalent (1 per test specimen)
   b. Linear position transducer (2 per test specimen placed 180° apart)
   c. Active strain gauges (8 per test specimen), placed as shown on test specimen.
   d. Secondary strain gauges (8 per test specimen), connect to unstressed steel plate (see Note 5)
   e. Reference electrode (1 per test specimen)
   f. Outside air temperature thermocouple (1 per test specimen)
   g. NaCl solution temperature thermocouple (1 per test specimen)
4. The following data shall be collected and recorded against time from the start of the test continuously when applicable. At a minimum, data shall be collected and recorded at the beginning and at the end of each load step, and at an interval not exceeding 8 hours:
   a. Load (hydraulic pressure from Jacks, calibrate jacks and pressure gauge)
   b. Displacement
   c. Confirmation of water level above the top of test specimen with plexiglass tube
   d. pH level of NaCl solution
   e. Reference electrode readings
   f. Strain gauge readings
   g. Acoustic emission events
   h. Temperatures
5. For each active strain gauge, a secondary strain gauge shall be furnished to provide for thermal compensation. The secondary strain gauge shall be of the same size and lot as the gauge and may be attached to unstressed steel plate inside the box section. The secondary strain gauge shall be connected to the Wheatstone bridge circuit on the same side as the active gauge.
6. Ensure that the threads behind the nut are wet prior to the start of the test.
7. Sets of strain gauges shall be placed 150 mm apart. Strain gauges shall be placed on unthreaded portion of test specimen/jacking rod.

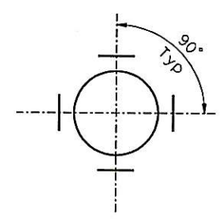

ACTIVE STRAIN GAUGE ARRANGEMENT

NTS

NOTES:

1. Traffic PL's are supported on Temporary Railing (Type K). Alternatively, Traffic PL's may be supported on concrete blocks to achieve desired height. They shall be tied down with wire ropes and anchors, or tied to adjacent Temporary Railing (Type K).
2. A maximum of 300x300 window shall be cut in the traffic PL to allow access for locking off the spherical nut.
3. For details of built-up box section, see "Test Rig Details No.11 through 14" sheets.
4. For details of reference electrode, see" Test Rig Details No.16" sheet.
5. Test set up shall be shielded from direct sunlight.

CONTRACT CHANGE ORDER NO. 31451
SHEET 3 OF 18

REQUESTS FOR INFORMATION NOT ADDRESSED IN THIS CCO REMAIN IN FORCE

ALL DIMENSIONS ARE IN MILLIMETERS UNLESS OTHERWISE SHOWN

A. Akinsanya / W. Long
DESIGN OVERSIGHT
SIGN OFF DATE 06/11/13

MARK	DATE	DESCRIPTIONS	BY	CH'D	CCO#
0	06/11/13	REMOVE, REPLACE, AND TEST SAMPLE RODS	CC	MN	31451

REVISIONS

DESIGN	BY C. Choi	CHECKED	N. Vo
DETAILS	BY G. Mak	CHECKED	J. Denis
QUANTITIES	BY G. Mak	CHECKED	J. Denis

PREPARED FOR THE STATE OF CALIFORNIA DEPARTMENT OF TRANSPORTATION

M. Nader
PROJECT ENGINEER

BRIDGE NO. 34-0006L/R
KILOMETER POST 13.2/13.9

SAN FRANCISCO OAKLAND BAY BRIDGE
EAST SPAN SEISMIC SAFETY PROJECT
SELF-ANCHORED SUSPENSION BRIDGE
(SUPERSTRUCTURE & TOWER)

TEST RIG DETAILS NO. 10

Rev. Date: 5-18-98

ORIGINAL SCALE IN MILLIMETERS FOR REDUCED PLANS 0 10 20 30 40 50 60 70 80 90 100

CU 04
EA 0120F1

DISREGARD PRINTS BEARING EARLIER REVISION DATES → 06/11/13

REVISION DATES (PRELIMINARY STAGE ONLY)

SHEET 471 OF 510

FILE => I:\bb\04-012001\sas\contract plans and cco\cco\cco#31451\1-original 06-11-13\dgn\aksrr10.dgn

100 % PS&E

USERNAME => arivera DATE PLOTTED => 18 JUN 2013 TIME PLOTTED => 13:37:35

DIST.	COUNTY	ROUTE	KILOMETER POST TOTAL PROJECT	SHEET NO.	TOTAL SHEETS
04	SF	80	13.2/13.9	888511	1204

REGISTERED ENGINEER - CIVIL

06-11-13

PLANS APPROVAL DATE

REGISTERED PROFESSIONAL ENGINEER Marwan N. Nader No. C 054426 Exp. 12/31/13 CIVIL STATE OF CALIFORNIA

The State of California or its officers or agents shall not be responsible for the accuracy or completeness of electronic copies of this plan sheet.

T.Y. LIN / MOFFATT & NICHOL
825 BATTERY STREET
SAN FRANCISCO, CA 94111

Caltrans now has a web site! To get to the web site, go to: http://www.dot.ca.gov

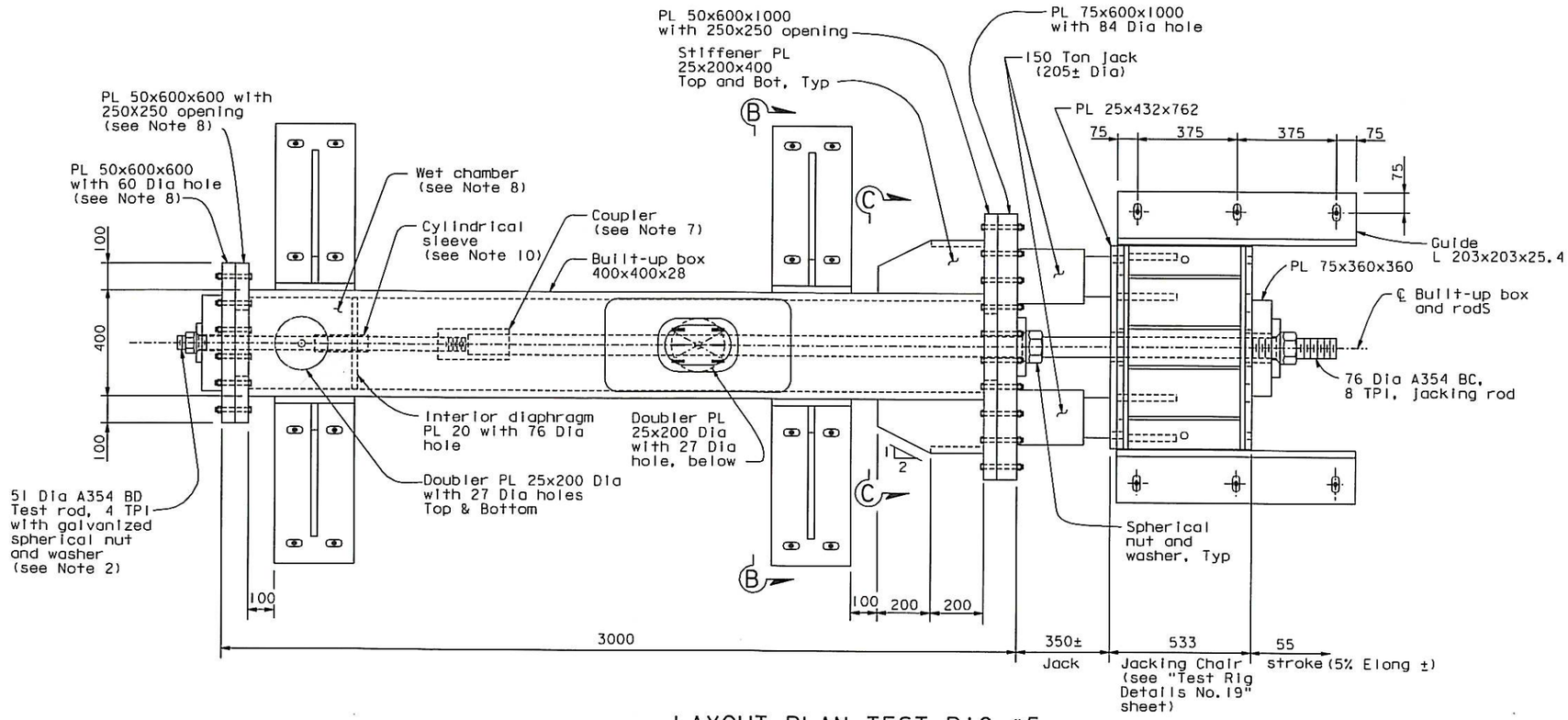

LAYOUT PLAN-TEST RIG #5

1:10

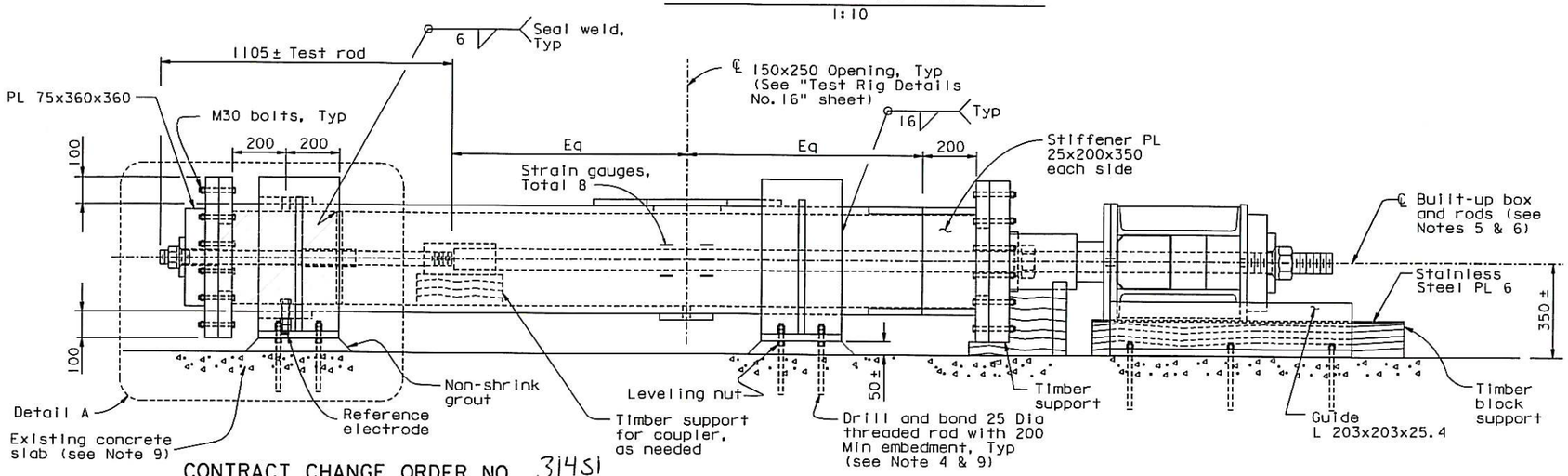

ELEVATION

1:10

NOTES:

1. For Detail A, Section B-B, and Section C-C, see "Test Rig Details No. 15" sheet.
2. Minimum of 75 mm of threads of the rod shall be submerged in the NaCl solution at the start of the test.
3. Built-up box 400x400x28 shall be used.
4. The drill and bond 25 Dia threaded rods shall have minimum allowable strength of 45 kN in tension and 30 kN in shear per threaded rod. Provide double nuts, snug-tight against steel plates.
5. Test assembly shall be placed level.
6. CL of built-up box and rods shall be aligned to within 4 mm.
7. For coupler detail, see "Test Rig Details No. 16" sheet.
8. All interior wetted surfaces of wet chambers, including inside of holes, shall be painted with two coats of epoxy based system or equivalent. Surface preparation and application procedure shall be per manufacturers' recommendations.
9. Existing concrete shall be 300 thick and shall have minimum strength of 14 MPa, confirm by testing of corings. In the event that foundation thickness or strength cannot be confirmed, reinforced concrete slab foundation shall be provided as shown on "Test Rig Details No. 21" sheet.
10. For cylindrical sleeve detail, see "Test Rig Details No. 16" sheet. Cylindrical sleeve shall be painted with two coats of epoxy based system or equivalent. Surface preparation and application procedure shall be per manufacturers' recommendations.

CONTRACT CHANGE ORDER NO. 31451
SHEET 4 OF 18

REQUESTS FOR INFORMATION NOT ADDRESSED IN THIS CCO REMAIN IN FORCE

ALL DIMENSIONS ARE IN MILLIMETERS UNLESS OTHERWISE SHOWN

MARK	DATE	DESCRIPTIONS	BY	CH'D	CCO#
0	06/11/13	REMOVE, REPLACE, AND TEST SAMPLE RODS	CC	MN	31451

REVISIONS

A. Akinsanya / W. Long
DESIGN OVERSIGHT
SIGN OFF DATE 06/11/13

Rev. Date: 5-22-13

DESIGN	BY C. Choi	CHECKED N. Vo	
DETAILS	BY G. Mok	CHECKED J. Denis	
QUANTITIES	BY G. Mok	CHECKED J. Denis	

PREPARED FOR THE STATE OF CALIFORNIA DEPARTMENT OF TRANSPORTATION

M. Nader
PROJECT ENGINEER

BRIDGE NO. 34-0006L/R
KILOMETER POST 13.2/13.9

SAN FRANCISCO OAKLAND BAY BRIDGE
EAST SPAN SEISMIC SAFETY PROJECT
SELF-ANCHORED SUSPENSION BRIDGE
(SUPERSTRUCTURE & TOWER)

TEST RIG DETAILS NO. 11

ORIGINAL SCALE IN MILLIMETERS FOR REDUCED PLANS 0 10 20 30 40 50 60 70 80 90 100

CU 04
EA 0120F1

DISREGARD PRINTS BEARING EARLIER REVISION DATES

REVISION DATES (PRELIMINARY STAGE ONLY) 06/11/13

SHEET 471511 OF

FILE => I:\bb\04-01200I\sas\contract plans and cco\cco\cco*31451\1-original 06-11-13\dgn\aksrr11.dgn

USERNAME => crivera DATE PLOTTED => 18 JUN 2013 TIME PLOTTED => 13:38:05

100 % PS&E

DIST.	COUNTY	ROUTE	KILOMETER POST TOTAL PROJECT	SHEET NO.	TOTAL SHEETS
04	SF	80	13.2/13.9	888512	1204

Caltrans Metric

REGISTERED ENGINEER - CIVIL

06-11-13

PLANS APPROVAL DATE

The State of California or its officers or agents shall not be responsible for the accuracy or completeness of electronic copies of this plan sheet.

REGISTERED PROFESSIONAL ENGINEER Marwan N. Nader No. C 054426 Exp. 12/31/13 CIVIL STATE OF CALIFORNIA

T.Y. LIN / MOFFATT & NICHOL
825 BATTERY STREET
SAN FRANCISCO, CA 94111

Caltrans now has a web site! To get to the web site, go to: http://www.dot.ca.gov

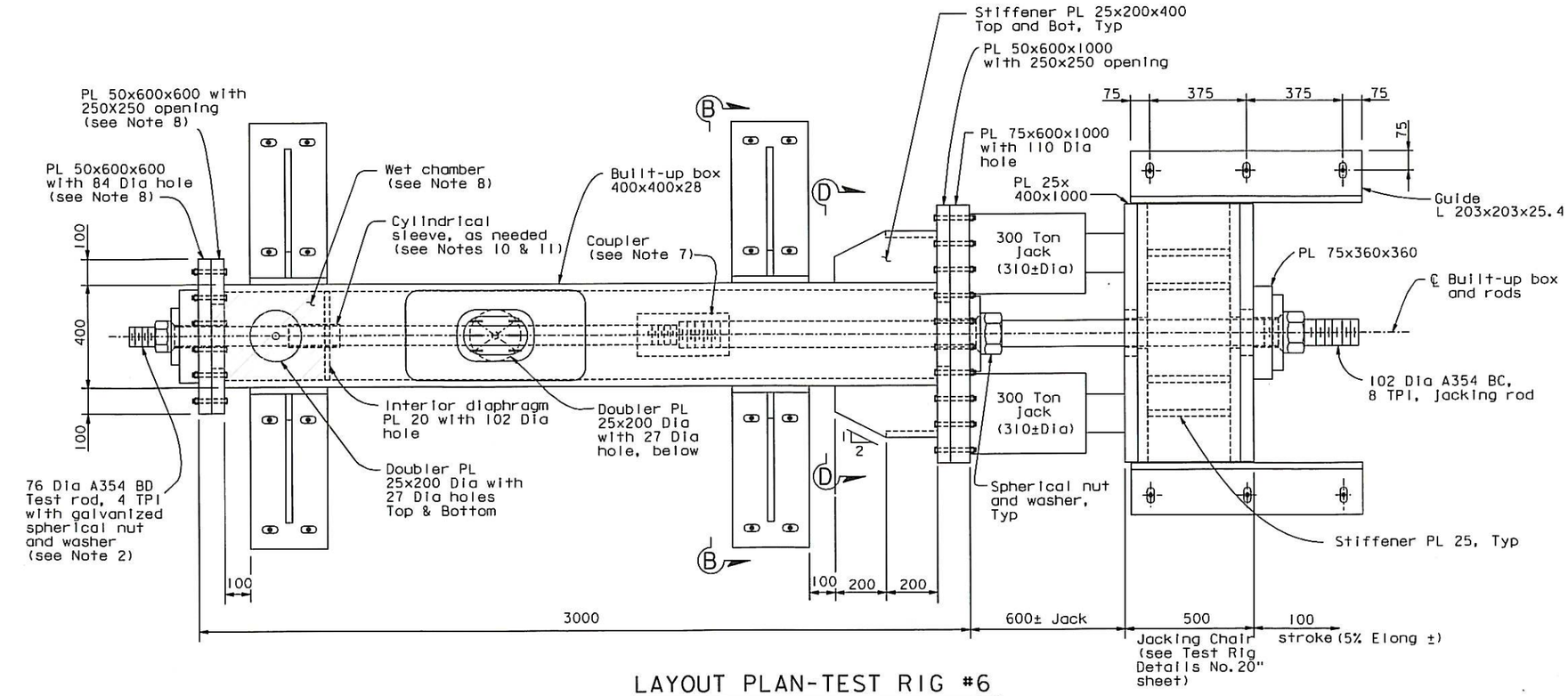

LAYOUT PLAN-TEST RIG #6

1:10

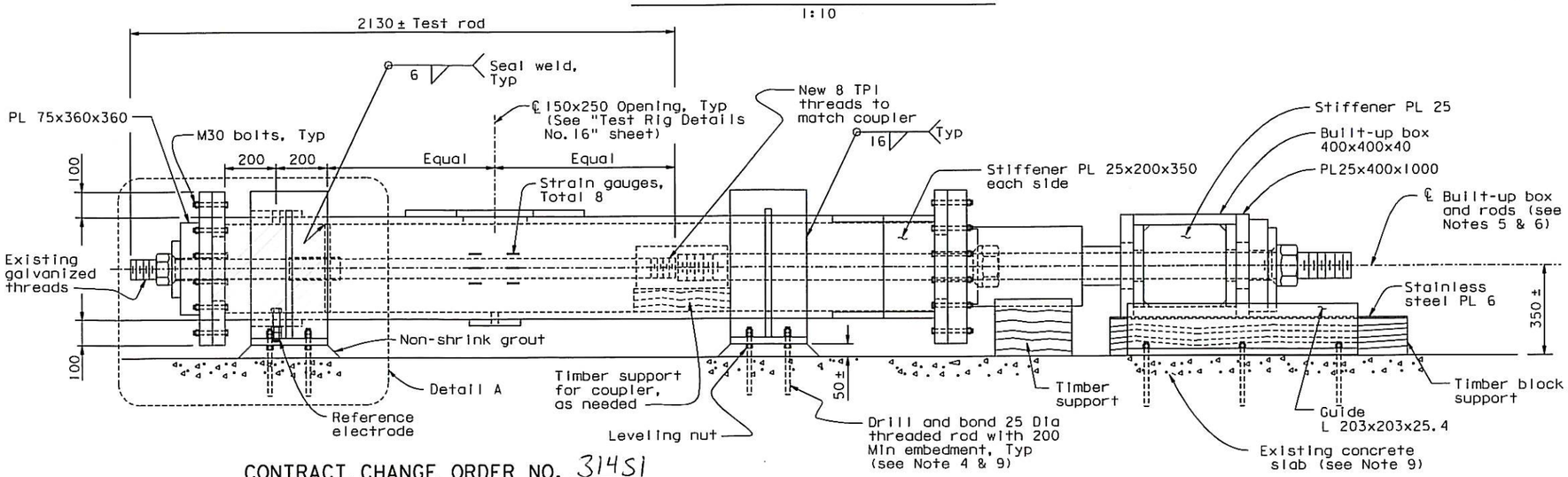

ELEVATION

1:10

NOTES:

1. For Detail A and Section B-B, see "Test Rig Details No. 15" sheet. For Section D-D, see "Test Rig Details No. 18" sheet.
2. Minimum of 75 mm of threads of the rod shall be submerged in the NaCl solution at the start of the test.
3. Built-up box 400x400x28 shall be used.
4. The drill and bond 25 Dia threaded rods shall have minimum allowable strength of 45 kN in tension and 30 kN in shear per threaded rod. Provide double nuts, snug-tight against steel plates.
5. Test assembly shall be placed level.
6. CL of built-up box and rods shall be aligned to within 4 mm.
7. For coupler detail, see "Test Rig Details No. 16" sheet.
8. All interior wetted surfaces of wet chambers, including inside of holes, shall be painted with two coats of epoxy based system or equivalent. Surface preparation and application procedure shall be per manufacturers' recommendations.
9. Existing concrete shall be 300 thick and shall have minimum strength of 14 MPa, confirm by testing of corings. In the event that foundation thickness or strength cannot be confirmed, reinforced concrete slab foundation shall be provided as shown on "Test Rig Details No. 21" sheet.
10. Install cylindrical sleeve if threads extend to interior diaphragm.
11. For cylindrical sleeve details, see "Test Rig Details No. 16" sheet. Cylindrical sleeve shall be painted with two coats of epoxy based system or equivalent. Surface preparation and application procedure shall be per manufacturers' recommendations.

CONTRACT CHANGE ORDER NO. 31451
SHEET 5 OF 18

REQUESTS FOR INFORMATION NOT ADDRESSED IN THIS CCO REMAIN IN FORCE

ALL DIMENSIONS ARE IN MILLIMETERS UNLESS OTHERWISE SHOWN

MARK	DATE	DESCRIPTIONS	BY	CH'D	CCO#
0	06/11/13	REMOVE, REPLACE, AND TEST SAMPLE RODS	CC	MN	31451

REVISIONS

A. Akinsanya / W. Long
DESIGN OVERSIGHT
SIGN OFF DATE 06/11/13

Rev. Date: 5-22-13

DESIGN	BY C. Chol	CHECKED N. Vo	
DETAILS	BY G. Mok	CHECKED J. Denis	
QUANTITIES	BY G. Mok	CHECKED J. Denis	

ORIGINAL SCALE IN MILLIMETERS FOR REDUCED PLANS 0 10 20 30 40 50 60 70 80 90 100

PREPARED FOR THE STATE OF CALIFORNIA DEPARTMENT OF TRANSPORTATION

M. Nader
PROJECT ENGINEER

CU 04
EA 0120F1

BRIDGE NO. 34-0006L/R
KILOMETER POST 13.2/13.9

DISREGARD PRINTS BEARING EARLIER REVISION DATES → 06/11/13

SAN FRANCISCO OAKLAND BAY BRIDGE
EAST SPAN SEISMIC SAFETY PROJECT
SELF-ANCHORED SUSPENSION BRIDGE
(SUPERSTRUCTURE & TOWER)

TEST RIG DETAILS NO. 12

REVISION DATES (PRELIMINARY STAGE ONLY) | SHEET 471512 | OF

FILE => I:\bb\04-01200I\sas\contract plans and cco\cco\cco#31451\I-original 06-11-13\dgn\aksrr12.dgn

USERNAME => arivera DATE PLOTTED => 18 JUN 2013 TIME PLOTTED => 13:38:36

100 % PS&E

DIST.	COUNTY	ROUTE	KILOMETER POST TOTAL PROJECT	SHEET NO.	TOTAL SHEETS
04	SF	80	13.2/13.9	888S13	1204

REGISTERED ENGINEER - CIVIL

06-11-13

PLANS APPROVAL DATE

REGISTERED PROFESSIONAL ENGINEER Marwan N. Nader No. C 054426 Exp. 12/31/13 CIVIL STATE OF CALIFORNIA

The State of California or its officers or agents shall not be responsible for the accuracy or completeness of electronic copies of this plan sheet.

T.Y. LIN / MOFFATT & NICHOL
825 BATTERY STREET
SAN FRANCISCO, CA 94111

Caltrans now has a web site! To get to the web site, go to: http://www.dot.ca.gov

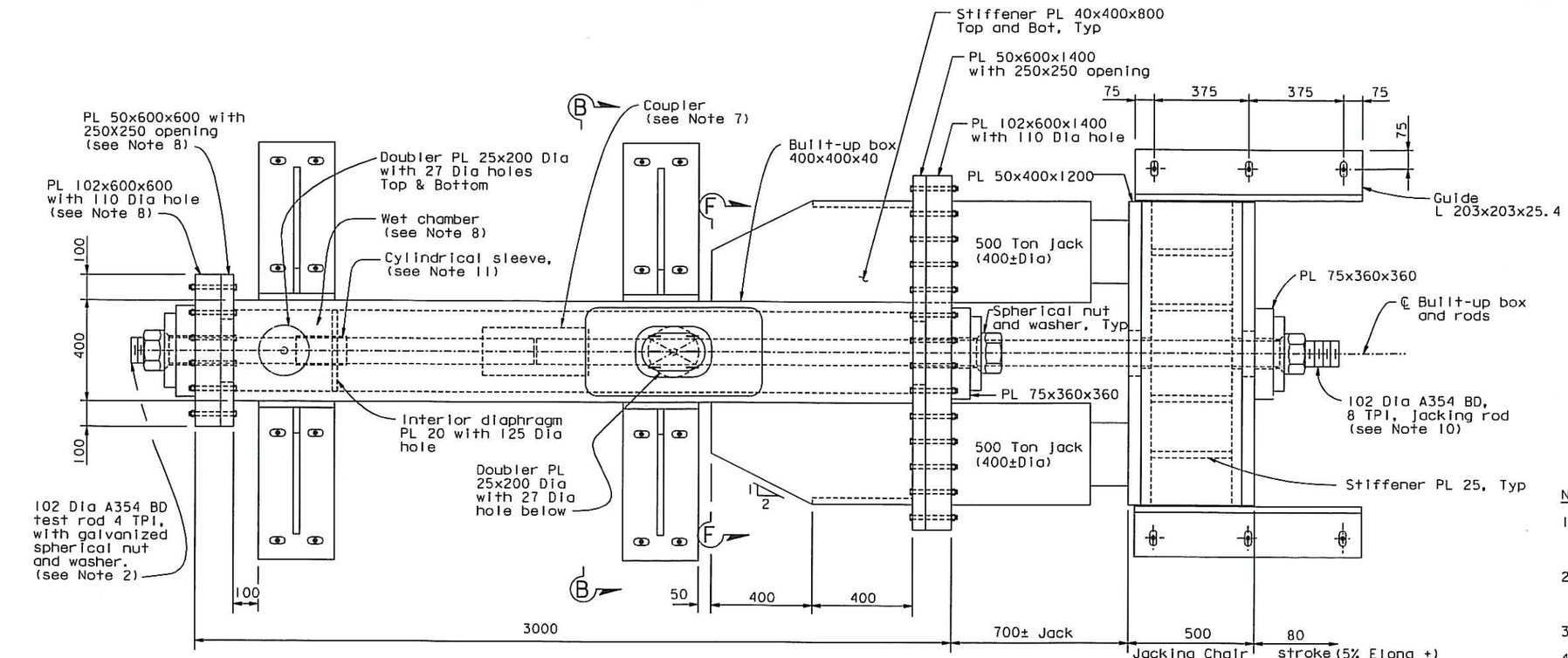

LAYOUT PLAN-TEST RIG #7

1:10

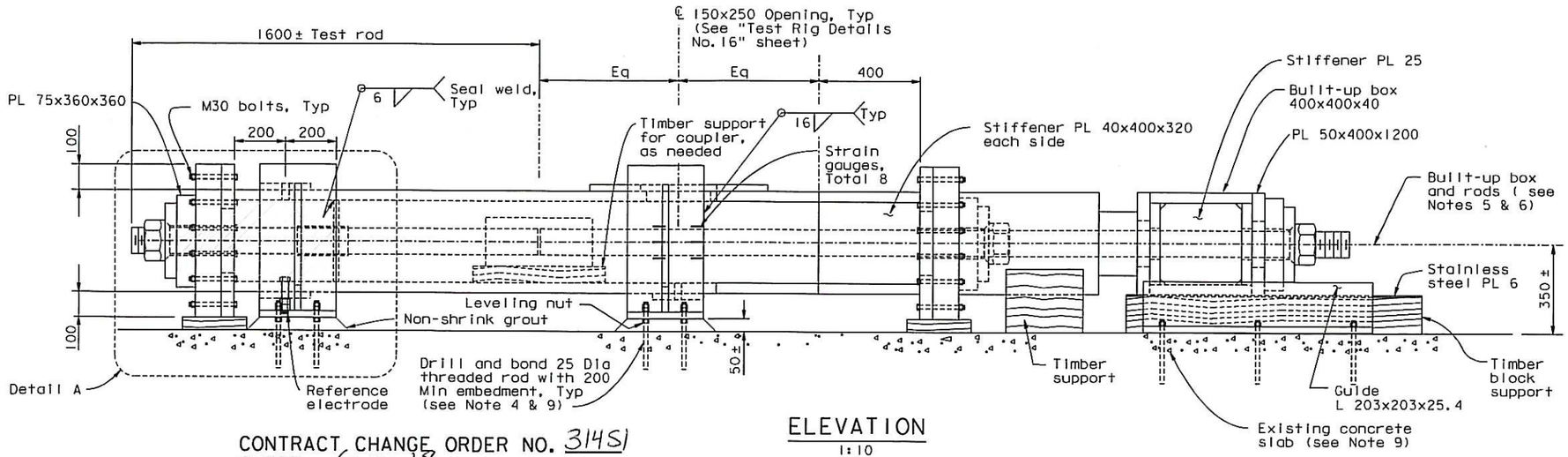

ELEVATION

1:10

NOTES:

1. For Detail A and Section B-B, see "Test Rig Details No. 15" sheet. For Section F-F, see "Test Rig Details No. 18" sheet.
2. Minimum of 75 mm of threads of the rod shall be submerged in the NaCl solution at the start of the test.
3. Built-up box 400x400x40 shall be used.
4. The drill and bond 25 Dia threaded rods shall have minimum allowable strength of 45 kN in tension and 30 kN in shear per threaded rod. Provide double nuts, snug-tight against steel plates.
5. Test assembly shall be placed level.
6. CL of built-up box and rods shall be aligned to within 4 mm.
7. For coupler detail, see "Test Rig Details No. 16" sheet.
8. All interior wetted surfaces of wet chambers, including inside of holes, shall be painted with two coats of epoxy based system or equivalent. Surface preparation and application procedure shall be per manufacturers' recommendations.
9. Existing concrete shall be 300 thick and shall have minimum strength of 14 MPa, confirm by testing of corings. In the event that foundation thickness or strength cannot be confirmed, reinforced concrete slab foundation shall be provided as shown on "Test Rig Details No. 21" sheet.
10. Provide mill certificate showing Fy of Jacking rod to be greater than Fy of test specimen by 10%.
11. For cylindrical sleeve details, see "Test Rig Details No. 16" sheet. Cylindrical sleeve shall be painted with two coats of epoxy based system or equivalent. Surface preparation and application procedure shall be per manufacturers' recommendations.

CONTRACT CHANGE ORDER NO. 31451
SHEET 6 OF 18

REQUESTS FOR INFORMATION NOT ADDRESSED IN THIS CCO REMAIN IN FORCE

ALL DIMENSIONS ARE IN MILLIMETERS UNLESS OTHERWISE SHOWN

A. Akinsanya / W. Long
DESIGN OVERSIGHT
SIGN OFF DATE 06/11/13

MARK	DATE	DESCRIPTIONS	BY	CH'D	CCO#
0	06/11/13	REMOVE, REPLACE, AND TEST SAMPLE RODS	CC	MN	31451

REVISIONS

DESIGN	BY	C. Chol	CHECKED	N. Vo	
DETAILS	BY	G. Mok	CHECKED	J. Denis	
QUANTITIES	BY	G. Mok	CHECKED	J. Denis	

PREPARED FOR THE STATE OF CALIFORNIA DEPARTMENT OF TRANSPORTATION

M. Nader
PROJECT ENGINEER

BRIDGE NO. 34-0006L/R
KILOMETER POST 13.2/13.9

SAN FRANCISCO OAKLAND BAY BRIDGE
EAST SPAN SEISMIC SAFETY PROJECT
SELF-ANCHORED SUSPENSION BRIDGE
(SUPERSTRUCTURE & TOWER)

TEST RIG DETAILS NO. 13

Rev. Date: 5-22-13

ORIGINAL SCALE IN MILLIMETERS FOR REDUCED PLANS 0 10 20 30 40 50 60 70 80 90 100

CU 04
EA 0120F1

DISREGARD PRINTS BEARING EARLIER REVISION DATES 06/11/13

REVISION DATES (PRELIMINARY STAGE ONLY)

SHEET 471S13 OF

FILE => I:\bb\04-012001\sas\contract plans and cco\cco\cco#31451\1-original 06-11-13\dgn\aksrr13.dgn

100 % PS&E

USERNAME => arivera DATE PLOTTED => 18 JUN 2013 TIME PLOTTED => 13:39:02

DIST.	COUNTY	ROUTE	KILOMETER POST TOTAL PROJECT	SHEET NO.	TOTAL SHEETS
04	SF	80	13.2/13.9	888514	1204

REGISTERED ENGINEER - CIVIL

06-11-13

PLANS APPROVAL DATE

The State of California or its officers or agents shall not be responsible for the accuracy or completeness of electronic copies of this plan sheet.

REGISTERED PROFESSIONAL ENGINEER Marwan N. Nader No. C 054426 Exp. 12/31/13 CIVIL STATE OF CALIFORNIA

T.Y. LIN / MOFFATT & NICHOL
825 BATTERY STREET
SAN FRANCISCO, CA 94111

Caltrans now has a web site! To get to the web site, go to: http://www.dot.ca.gov

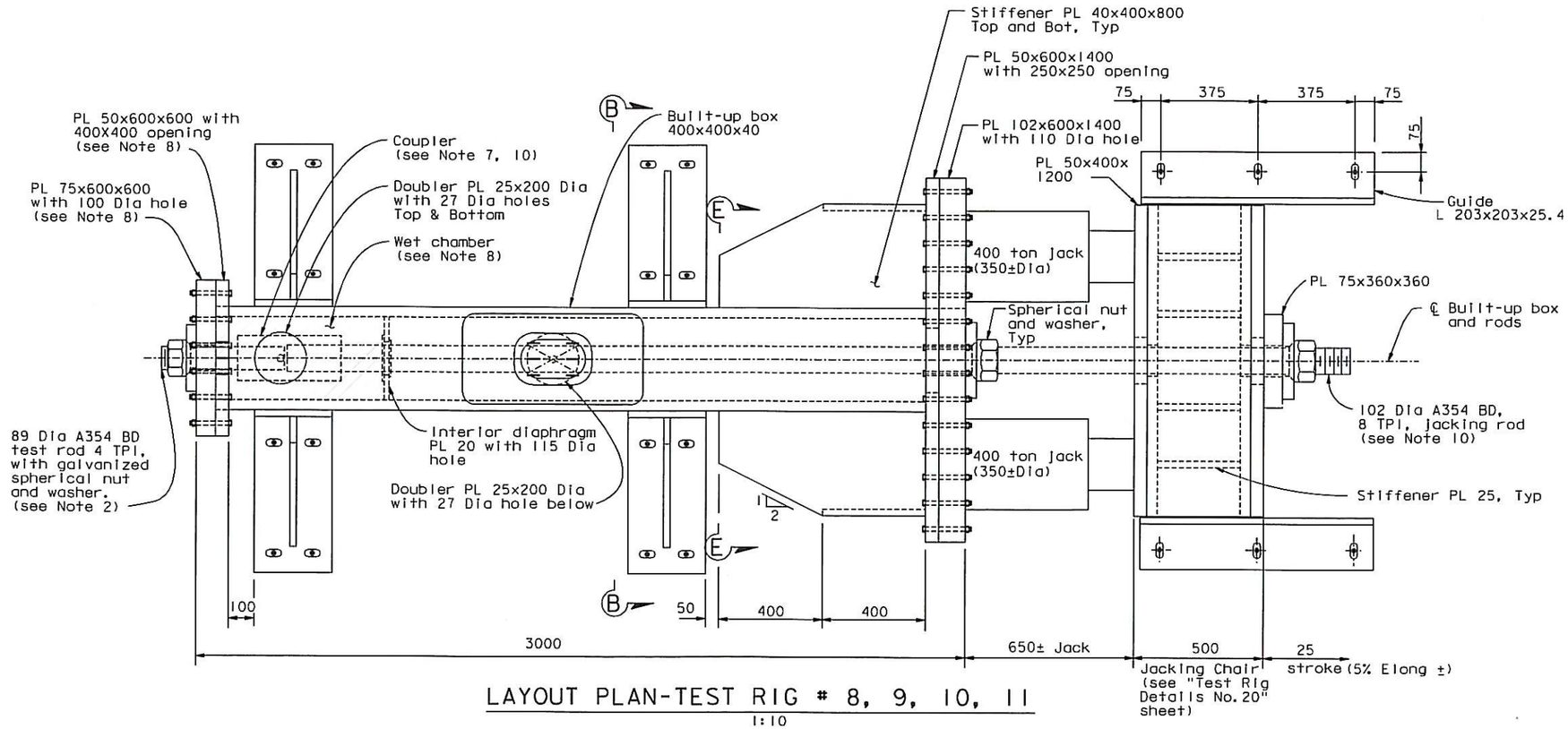

LAYOUT PLAN-TEST RIG # 8, 9, 10, 11

1:10

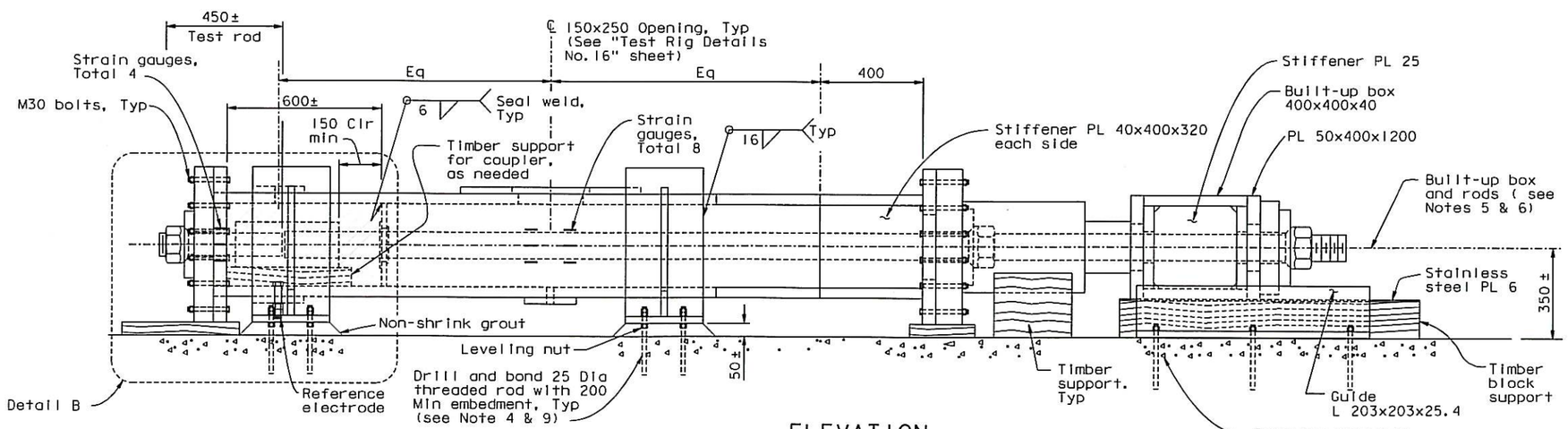

ELEVATION

1:10

NOTES:

1. For Section B-B, see "Test Rig Details No. 15" sheet. For Detail B, see "Test Rig Details No. 17" sheet. For "Section E-E, see "Test Rig Details No. 18" sheet.
2. Minimum of 75 mm of threads of the rod shall be submerged in the NaCl solution at the start of the test.
3. Built-up box 400x400x40 shall be used.
4. The drill and bond 25 Dia threaded rods shall have minimum allowable strength of 45 kN in tension and 30 kN in shear per threaded rod. Provide double nuts, snug-tight against steel plates.
5. Test assembly shall be placed level.
6. CL of built-up box and rods shall be aligned to within 4 mm.
7. For coupler detail, see "Test Rig Details No. 16" sheet.
8. All interior wetted surfaces of wet chambers, including inside of holes, shall be painted with two coats of epoxy based system or equivalent. Surface preparation and application procedure shall be per manufacturers' recommendations.
9. Existing concrete shall be 300 thick and shall have minimum strength of 14 MPa, confirm by testing of corings. In the event that foundation thickness or strength cannot be confirmed, reinforced concrete slab foundation shall be provided as shown on "Test Rig Details No. 21" sheet.
10. Coupler and portion of jacking rod submerged in NaCl solution shall be painted with two coats of epoxy based system or equivalent. Surface preparation and application procedure shall be per manufacturers' recommendations.

CONTRACT CHANGE ORDER NO. 31451
SHEET 7 OF 18

REQUESTS FOR INFORMATION NOT ADDRESSED IN THIS CCO REMAIN IN FORCE

ALL DIMENSIONS ARE IN MILLIMETERS UNLESS OTHERWISE SHOWN

A. Akinsanya / W. Long
DESIGN OVERSIGHT
SIGN OFF DATE 06/11/13

Rev. Date: 5-22-13

MARK	DATE	DESCRIPTIONS	BY	CH'D	CCO#
0	06/11/13	REMOVE, REPLACE, AND TEST SAMPLE RODS	CC	MN	31451

REVISIONS

DESIGN	BY	C. Choi	CHECKED	N. Vo
DETAILS	BY	G. Mok	CHECKED	J. Denis
QUANTITIES	BY	G. Mok	CHECKED	J. Denis

PREPARED FOR THE STATE OF CALIFORNIA DEPARTMENT OF TRANSPORTATION

M. Nader
PROJECT ENGINEER

BRIDGE NO. 34-0006L/R
KILOMETER POST 13.2/13.9

SAN FRANCISCO OAKLAND BAY BRIDGE
EAST SPAN SEISMIC SAFETY PROJECT
SELF-ANCHORED SUSPENSION BRIDGE
(SUPERSTRUCTURE & TOWER)

TEST RIG DETAILS NO. 14

ORIGINAL SCALE IN MILLIMETERS FOR REDUCED PLANS 0 10 20 30 40 50 60 70 80 90 100

CU 04
EA 0120F1

DISREGARD PRINTS BEARING EARLIER REVISION DATES 06/11/13

REVISION DATES (PRELIMINARY STAGE ONLY)

SHEET 471514 OF

FILE => I:\bb\04-012001\sas\contract plans and cco\cco\cco#31451\1-original 06-11-13\dgn\aksrr14.dgn

100 % PS&E

USERNAME => arivera DATE PLOTTED => 18 JUN 2013 TIME PLOTTED => 13:39:29

DIST.	COUNTY	ROUTE	KILOMETER POST TOTAL PROJECT	SHEET NO.	TOTAL SHEETS
04	SF	80	13.2/13.9	BBBS15	1204

REGISTERED ENGINEER - CIVIL

06-11-13

PLANS APPROVAL DATE

REGISTERED PROFESSIONAL ENGINEER Marwan N. Nader No. C 054426 Exp. 12/31/13 CIVIL STATE OF CALIFORNIA

The State of California or its officers or agents shall not be responsible for the accuracy or completeness of electronic copies of this plan sheet.

T.Y. LIN / MOFFATT & NICHOL
825 BATTERY STREET
SAN FRANCISCO, CA 94111

Caltrans now has a web site! To get to the web site, go to: http://www.dot.ca.gov

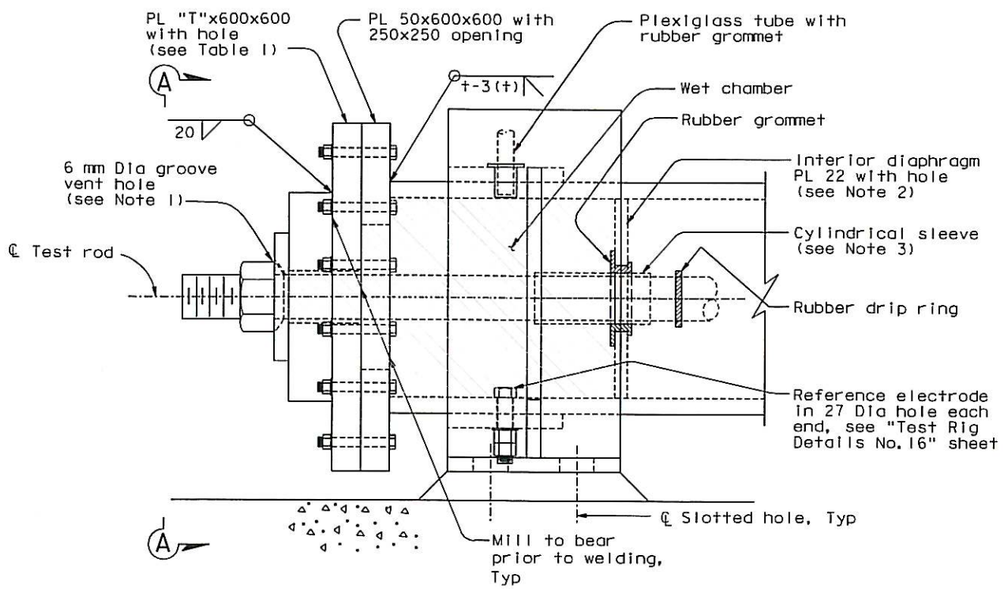

DETAIL A

1:5

(Test Rig #5 shown, other similar)

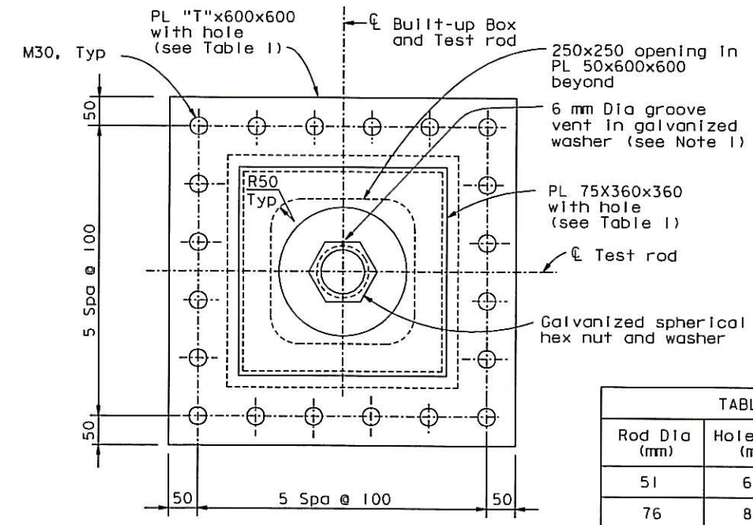

SECTION A-A

1:5

TABLE 1		
Rod Dia (mm)	Hole Dia (mm)	"T" (mm)
51	60	50
76	84	50
102	110	102

NOTES:

1. For detail of groove vent, see "Test Rig Details No. 16" sheet.
2. At the Contractor's option, hole may be made larger to facilitate test rod and match rubber grommet installation.
3. For detail of cylindrical sleeve, see "Test Rig Details No. 16" sheet.

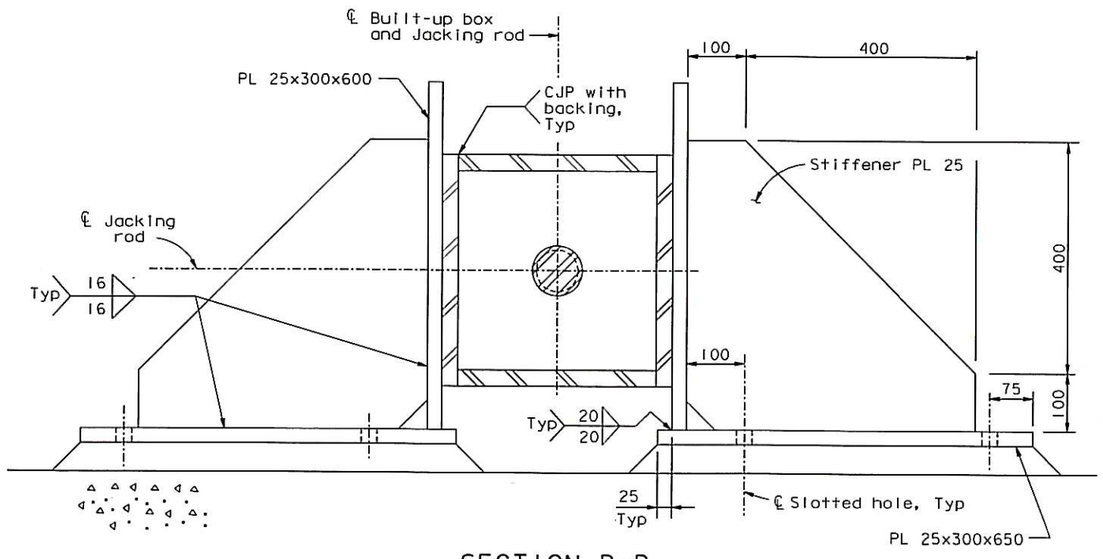

SECTION B-B

1:5

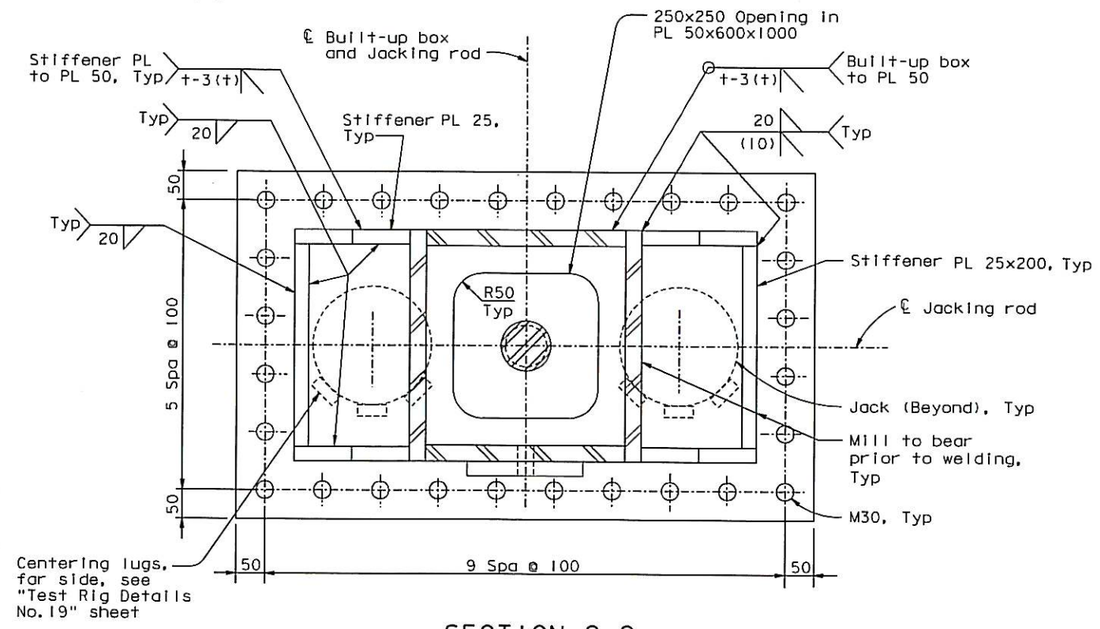

SECTION C-C

1:5

CONTRACT CHANGE ORDER NO. 31451
SHEET 8 OF 18

REQUESTS FOR INFORMATION NOT ADDRESSED IN THIS CCO REMAIN IN FORCE

ALL DIMENSIONS ARE IN MILLIMETERS UNLESS OTHERWISE SHOWN

A. Akinsanya / W. Long
DESIGN OVERSIGHT
SIGN OFF DATE 06/11/13

MARK	DATE	DESCRIPTIONS	BY	CH'D	CCO#
0	06/11/13	REMOVE, REPLACE, AND TEST SAMPLE RODS	CC	MN	31451

REVISIONS

Rev. Date: 5-18-98

DESIGN	BY C. Choi	CHECKED	N. Vo
DETAILS	BY G. Mok	CHECKED	J. Denis
QUANTITIES	BY G. Mok	CHECKED	J. Denis

PREPARED FOR THE STATE OF CALIFORNIA DEPARTMENT OF TRANSPORTATION

M. Nader
PROJECT ENGINEER

BRIDGE NO. 34-0006L/R
KILOMETER POST 13.2/13.9

CU 04
EA 0120F1

ORIGINAL SCALE IN MILLIMETERS FOR REDUCED PLANS 0 10 20 30 40 50 60 70 80 90 100

DISREGARD PRINTS BEARING EARLIER REVISION DATES 06/11/13

SAN FRANCISCO OAKLAND BAY BRIDGE
EAST SPAN SEISMIC SAFETY PROJECT
SELF-ANCHORED SUSPENSION BRIDGE
(SUPERSTRUCTURE & TOWER)

TEST RIG DETAILS NO. 15

REVISION DATES (PRELIMINARY STAGE ONLY)

SHEET 471S15 OF

FILE => I:\bb\04-012001\sas\contract plans and cco\cco\cco#31451\1-original 06-11-13\dgn\aksrr15.dgn

100 % PS&E

USERNAME => arivera DATE PLOTTED => 18 JUN 2013 TIME PLOTTED => 13:39:57

DIST.	COUNTY	ROUTE	KILOMETER POST TOTAL PROJECT	SHEET NO.	TOTAL SHEETS
04	SF	80	13.2/13.9	888516	1204

REGISTERED ENGINEER - CIVIL

06-11-13

PLANS APPROVAL DATE

REGISTERED PROFESSIONAL ENGINEER Marwan N. Nader No. C 054426 Exp. 12/31/13 CIVIL STATE OF CALIFORNIA

The State of California or its officers or agents shall not be responsible for the accuracy or completeness of electronic copies of this plan sheet.

T.Y. LIN / MOFFATT & NICHOL
825 BATTERY STREET
SAN FRANCISCO, CA 94111

Caltrans now has a web site! To get to the web site, go to: http://www.dot.ca.gov

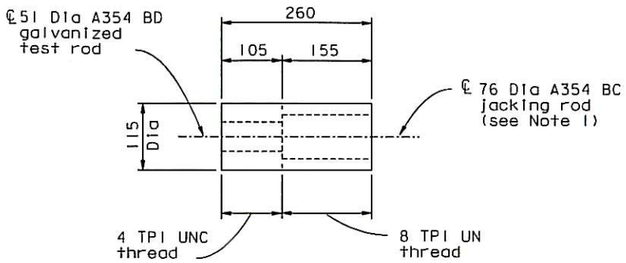

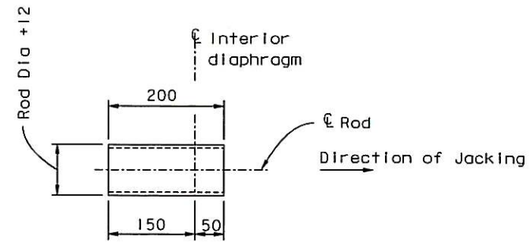

CYLINDRICAL SLEEVE DETAIL (See Notes 4 & 5)

1:5

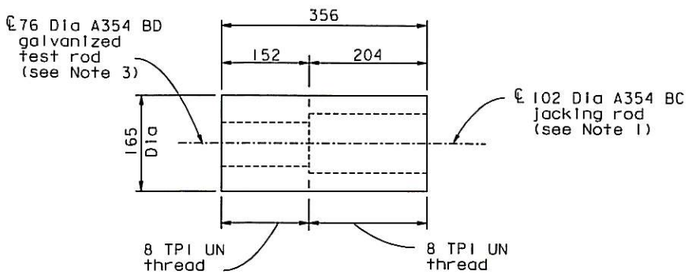

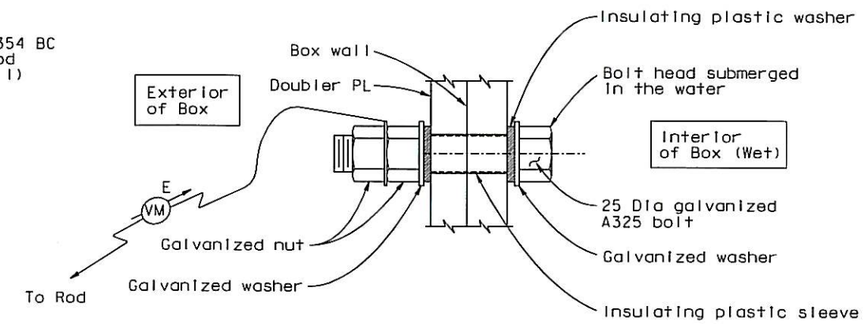

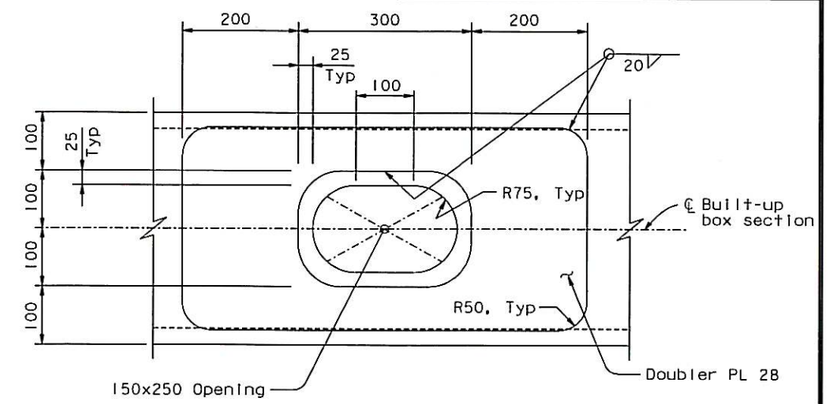

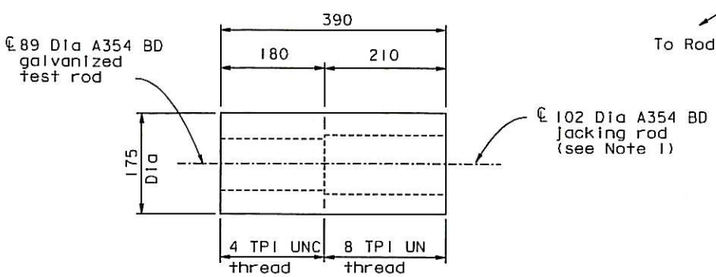

REFERENCE ELECTRODE DETAIL

1:2

OPENING AND DOUBLER DETAIL

1:5

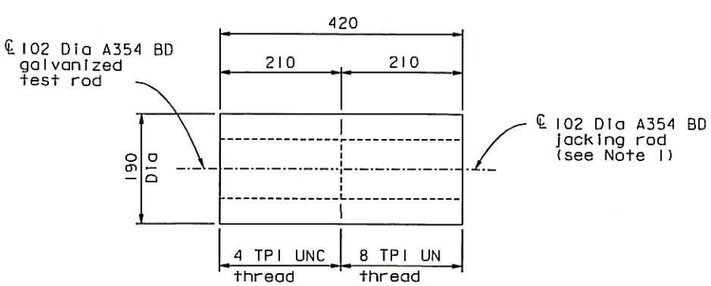

COUPLER DETAILS

1:5

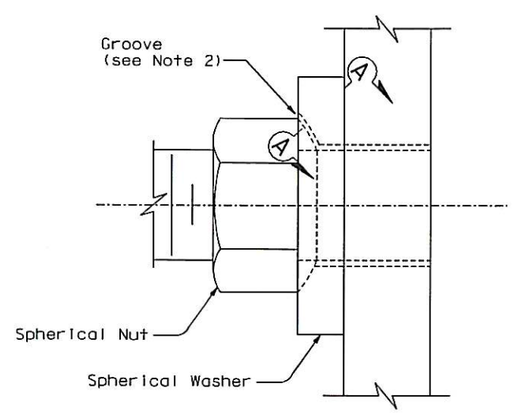

GROOVE DETAIL

1:2

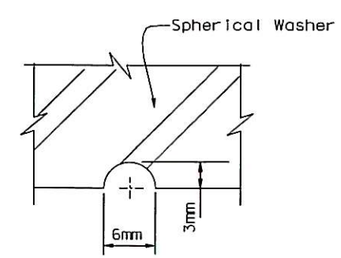

SECTION A-A

NTS

NOTES:

1. Coupler and jacking rod shall be fabricated from AISI 4340 materials, with mechanical properties conforming to ASTM A354 BC. Tapping of the coupler threads shall account for the thickness of galvanizing on the test rods.
2. Groove shall be used to confirm an outflow of NaCl solution through the threads. Upon confirmation, seal groove with closed cell backer rod, plumber putty or similar material.
3. New threads at this end of test rod shall not be galvanized.
4. Cylindrical sleeve shall be fabricated from AISI 1010 material. Inside of sleeve shall be tapped to be compatible with the threaded rod.
5. Apply plumber dope or equivalent to seal threads against leaks. Submit product for review and approval by the Engineer.

CONTRACT CHANGE ORDER NO. 31451
SHEET 9 OF 18

REQUESTS FOR INFORMATION NOT ADDRESSED IN THIS CCO REMAIN IN FORCE

ALL DIMENSIONS ARE IN MILLIMETERS UNLESS OTHERWISE SHOWN

A. Akinsanya / W. Long
DESIGN OVERSIGHT
SIGN OFF DATE 06/11/13

MARK	DATE	DESCRIPTIONS	BY	CH'D	CCO#
0	06/11/13	REMOVE, REPLACE, AND TEST SAMPLE RODS	CC	MN	31451

REVISIONS

DESIGN	BY	C. Chol	CHECKED	N. Vo
DETAILS	BY	G. Mok	CHECKED	J. Denis
QUANTITIES	BY	G. Mok	CHECKED	J. Denis

PREPARED FOR THE STATE OF CALIFORNIA DEPARTMENT OF TRANSPORTATION

M. Nader
PROJECT ENGINEER

BRIDGE NO. 34-0006L/R
KILOMETER POST 13.2/13.9

SAN FRANCISCO OAKLAND BAY BRIDGE
EAST SPAN SEISMIC SAFETY PROJECT
SELF-ANCHORED SUSPENSION BRIDGE
(SUPERSTRUCTURE & TOWER)

TEST RIG DETAILS NO. 16

Rev. Date: 5-22-13

ORIGINAL SCALE IN MILLIMETERS FOR REDUCED PLANS 0 10 20 30 40 50 60 70 80 90 100

CU 04
EA 0120F1

DISREGARD PRINTS BEARING EARLIER REVISION DATES 06/11/13

REVISION DATES (PRELIMINARY STAGE ONLY)

SHEET 471516 OF

FILE => I:\bb\04-01200\sas\contract plans and cco\cco\cco#31451\1-original 06-11-13\dgn\aksrr16.dgn

100 % PS&E

USERNAME => arivera DATE PLOTTED => 18 JUN 2013 TIME PLOTTED => 13:40:24

DIST.	COUNTY	ROUTE	KILOMETER POST TOTAL PROJECT	SHEET NO.	TOTAL SHEETS
04	SF	80	13.2/13.9	888S17	1204

REGISTERED ENGINEER - CIVIL

06-11-13

PLANS APPROVAL DATE

REGISTERED PROFESSIONAL ENGINEER Marwan N. Nader No. C 054426 Exp. 12/31/13 CIVIL STATE OF CALIFORNIA

The State of California or its officers or agents shall not be responsible for the accuracy or completeness of electronic copies of this plan sheet.

T.Y. LIN / MOFFATT & NICHOL
825 BATTERY STREET
SAN FRANCISCO, CA 94111

Caltrans now has a web site! To get to the web site, go to: http://www.dot.ca.gov

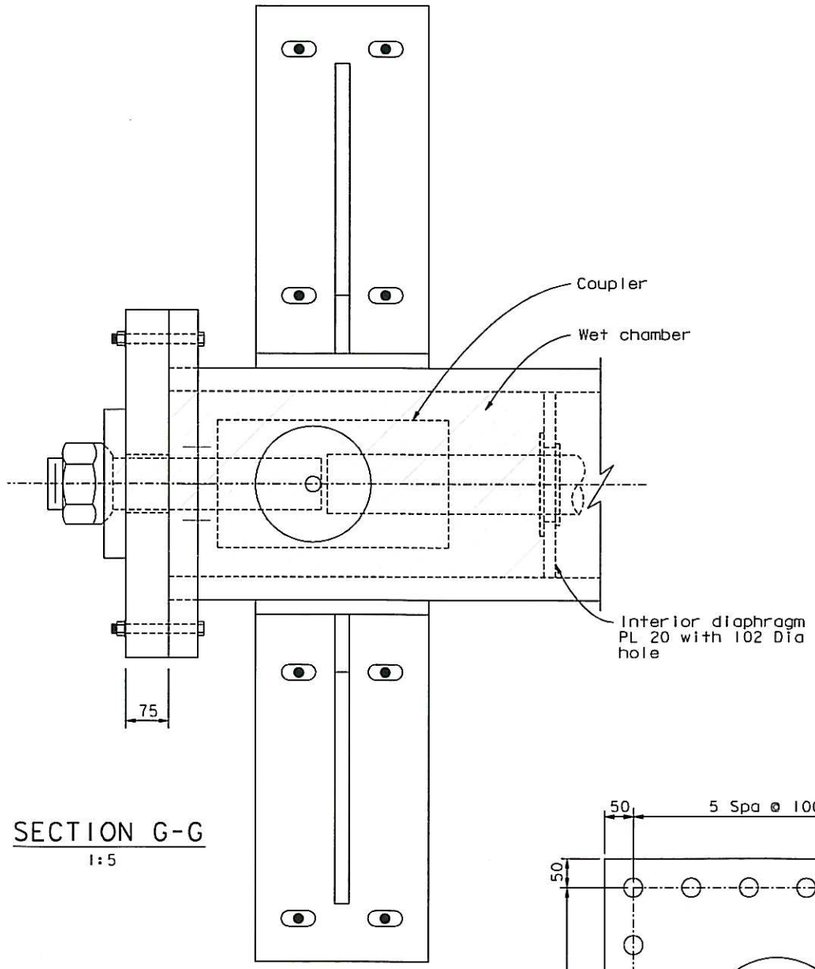

SECTION G-G
1:5

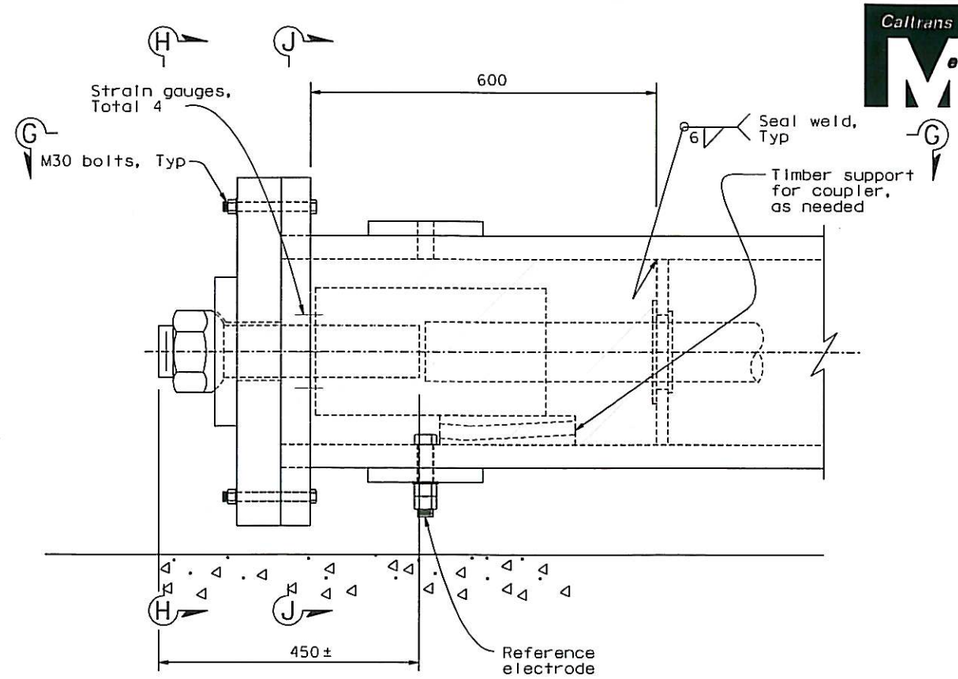

DETAIL B (Support bracket not shown for clarity)
1:5

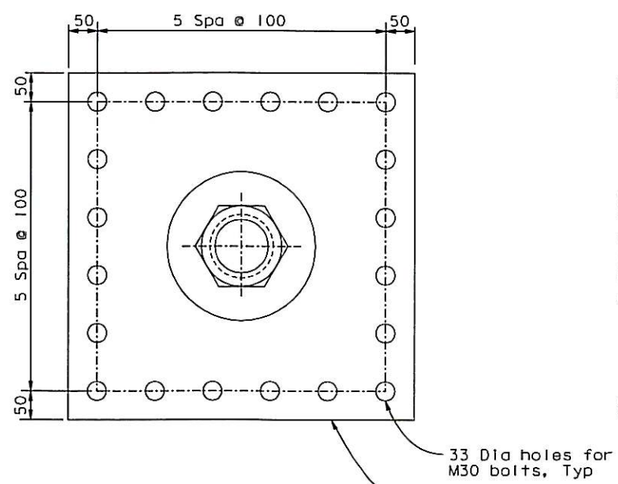

SECTION H-H
1:5

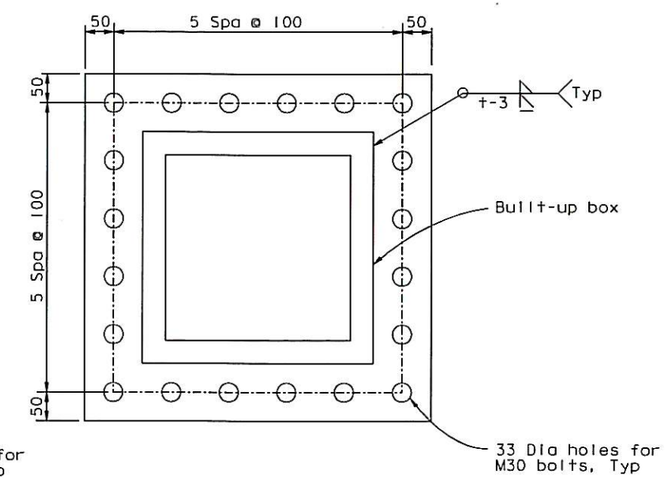

SECTION J-J
1:5

CONTRACT CHANGE ORDER NO. 31451
SHEET 10 OF 18

REQUESTS FOR INFORMATION NOT ADDRESSED IN THIS CCO REMAIN IN FORCE

ALL DIMENSIONS ARE IN MILLIMETERS UNLESS OTHERWISE SHOWN

A. Akinsanya / W. Long
DESIGN OVERSIGHT
SIGN OFF DATE 06/11/13

MARK	DATE	DESCRIPTIONS	BY	CH'D	CCO#
0	06/11/13	REMOVE, REPLACE, AND TEST SAMPLE RODS	CC	MN	31451

REVISIONS

DESIGN	BY	C. Chol	CHECKED	N. Vo
DETAILS	BY	G. Mak	CHECKED	J. Denis
QUANTITIES	BY	G. Mak	CHECKED	J. Denis

PREPARED FOR THE STATE OF CALIFORNIA DEPARTMENT OF TRANSPORTATION

M. Nader
PROJECT ENGINEER

BRIDGE NO. 34-0006L/R
KILOMETER POST 13.2/13.9

SAN FRANCISCO OAKLAND BAY BRIDGE
EAST SPAN SEISMIC SAFETY PROJECT
SELF-ANCHORED SUSPENSION BRIDGE
(SUPERSTRUCTURE & TOWER)

TEST RIG DETAILS NO. 17

Rev. Date: 5-22-13

ORIGINAL SCALE IN MILLIMETERS FOR REDUCED PLANS 0 10 20 30 40 50 60 70 80 90 100

CU 04
EA 0120F1

DISREGARD PRINTS BEARING EARLIER REVISION DATES → 06/11/13

REVISION DATES (PRELIMINARY STAGE ONLY)

SHEET 471S17 OF

FILE => I:\bb\04-012001\sas\contract plans and cco\cco\cco#31451\1-original 06-11-13\dgn\aksrr17.dgn

USERNAME => arivera DATE PLOTTED => 18 JUN 2013 TIME PLOTTED => 13:40:50

DIST.	COUNTY	ROUTE	KILOMETER POST TOTAL PROJECT	SHEET NO.	TOTAL SHEETS
04	SF	80	13.2/13.9	888518	1204

REGISTERED ENGINEER - CIVIL

06-11-13

PLANS APPROVAL DATE

REGISTERED PROFESSIONAL ENGINEER Marwan N. Nader No. C 054426 Exp. 12/31/13 CIVIL STATE OF CALIFORNIA

The State of California or its officers or agents shall not be responsible for the accuracy or completeness of electronic copies of this plan sheet.

T.Y. LIN / MOFFATT & NICHOL
825 BATTERY STREET
SAN FRANCISCO, CA 94111

Caltrans now has a web site! To get to the web site, go to: http://www.dot.ca.gov

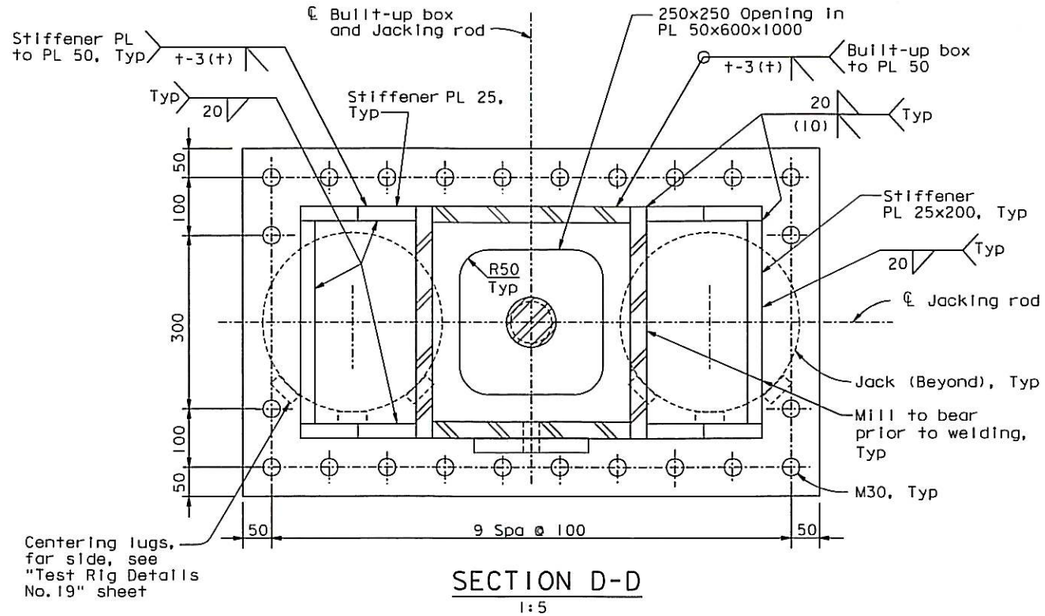

SECTION D-D
1:5

NOTES:

1. For detail of groove vent, see "Test Rig Details No. 16" sheet.
2. At the Contractor's option, hole may be made larger to facilitate rod test specimen installation.

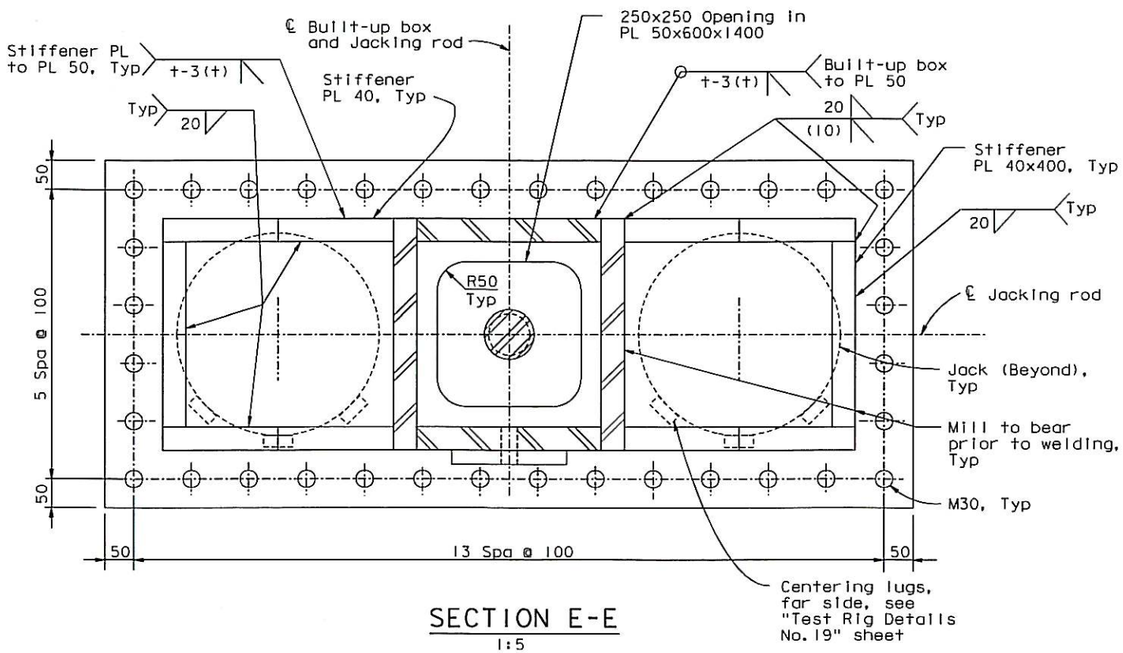

SECTION E-E
1:5

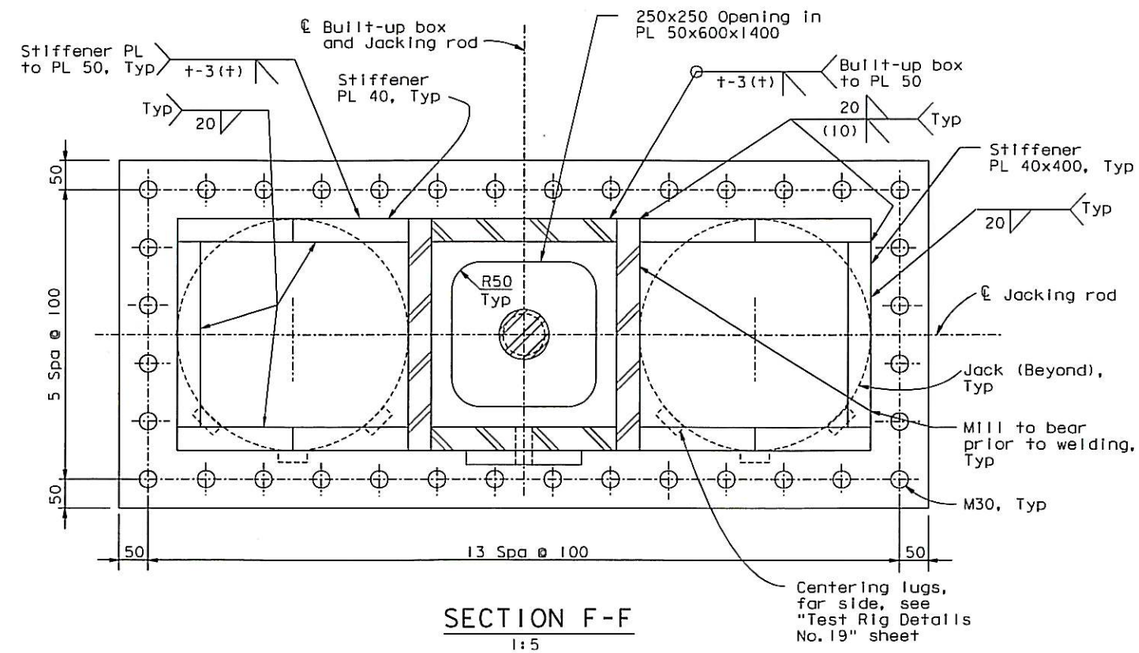

SECTION F-F
1:5

CONTRACT CHANGE ORDER NO. 31451
SHEET 11 OF 18

REQUESTS FOR INFORMATION NOT ADDRESSED IN THIS CCO REMAIN IN FORCE

ALL DIMENSIONS ARE IN MILLIMETERS UNLESS OTHERWISE SHOWN

A. Akinsanya / W. Long
DESIGN OVERSIGHT
SIGN OFF DATE 06/11/13

MARK	DATE	DESCRIPTIONS	BY	CH'D	CCO#
0	06/11/13	REMOVE, REPLACE, AND TEST SAMPLE RODS	CC	MN	31451

REVISIONS

DESIGN	BY C. Choi	CHECKED	N. Vo
DETAILS	BY G. Mok	CHECKED	J. Denis
QUANTITIES	BY G. Mok	CHECKED	J. Denis

PREPARED FOR THE STATE OF CALIFORNIA DEPARTMENT OF TRANSPORTATION

M. Nader
PROJECT ENGINEER

BRIDGE NO. 34-0006L/R
KILOMETER POST 13.2/13.9

SAN FRANCISCO OAKLAND BAY BRIDGE
EAST SPAN SEISMIC SAFETY PROJECT
SELF-ANCHORED SUSPENSION BRIDGE
(SUPERSTRUCTURE & TOWER)

TEST RIG DETAILS NO. 18

Rev. Date: 5-18-98

ORIGINAL SCALE IN MILLIMETERS FOR REDUCED PLANS 0 10 20 30 40 50 60 70 80 90 100

CU 04
EA 0120F1

DISREGARD PRINTS BEARING EARLIER REVISION DATES

REVISION DATES (PRELIMINARY STAGE ONLY) 06/11/13

SHEET 471 OF 518

FILE => I:\bb\04-012001\sas\contract plans and cco\cco\cco#31451\1-original 06-11-13\dgn\aksrr18.dgn

100 % PS&E

USERNAME => arivera DATE PLOTTED => 18 JUN 2013 TIME PLOTTED => 13:41:16

DIST.	COUNTY	ROUTE	KILOMETER POST TOTAL PROJECT	SHEET NO.	TOTAL SHEETS
04	SF	80	13.2/13.9	888S19	1204

REGISTERED ENGINEER - CIVIL

06-11-13

PLANS APPROVAL DATE

REGISTERED PROFESSIONAL ENGINEER Marwan N. Nader No. C 054426 Exp. 12/31/13 CIVIL STATE OF CALIFORNIA

The State of California or its officers or agents shall not be responsible for the accuracy or completeness of electronic copies of this plan sheet.

T.Y. LIN / MOFFATT & NICHOL
825 BATTERY STREET
SAN FRANCISCO, CA 94111

Caltrans now has a web site! To get to the web site, go to: http://www.dot.ca.gov

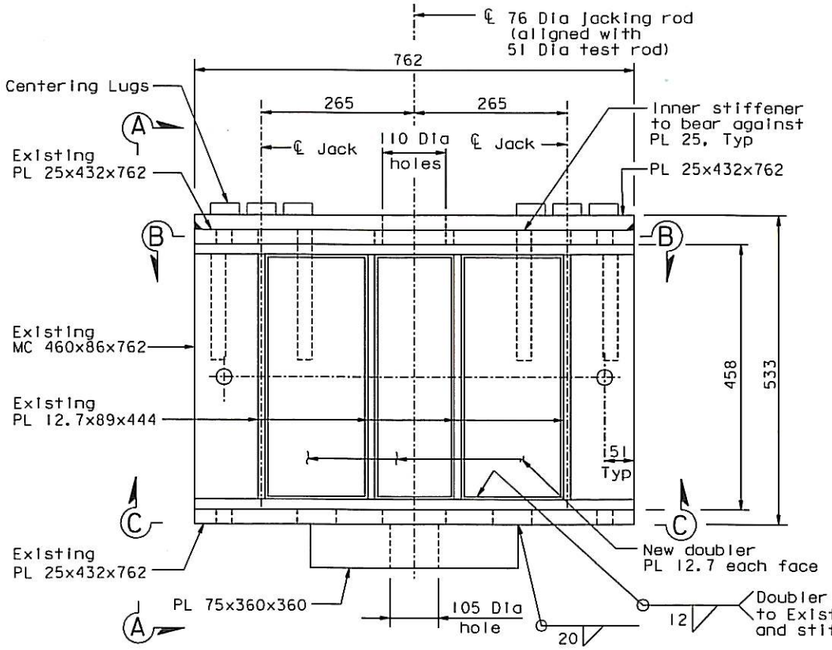

JACKING CHAIR
1:5

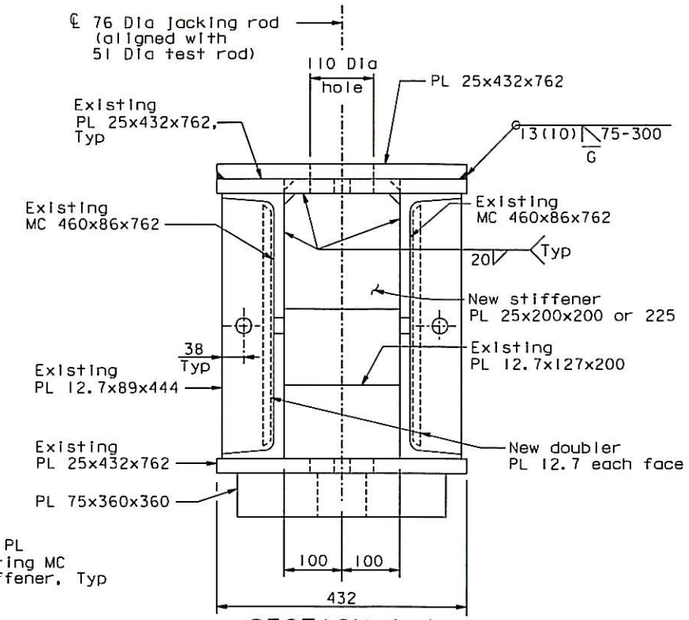

SECTION A-A
1:5

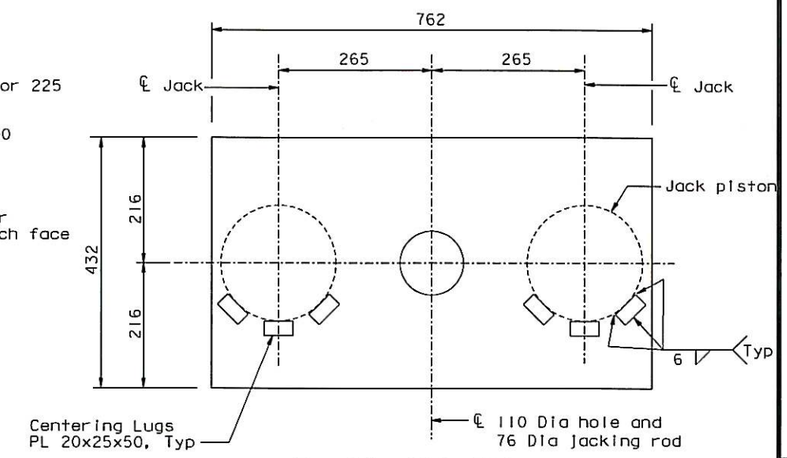

PL 25x432x762
1:5

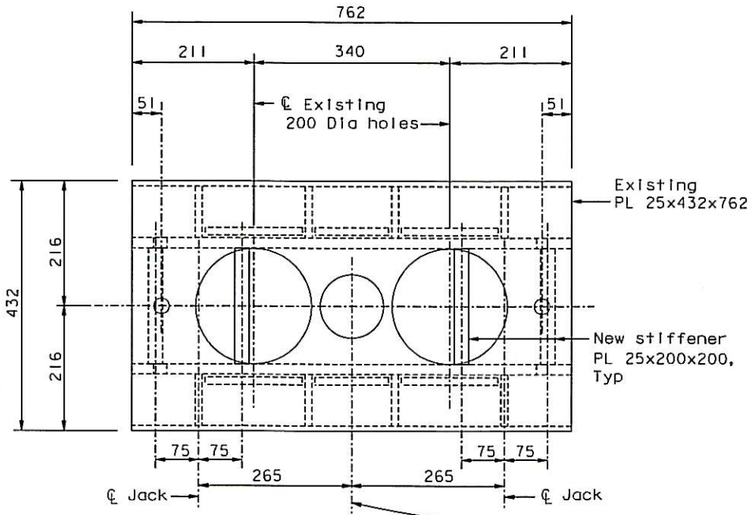

SECTION B-B
1:5

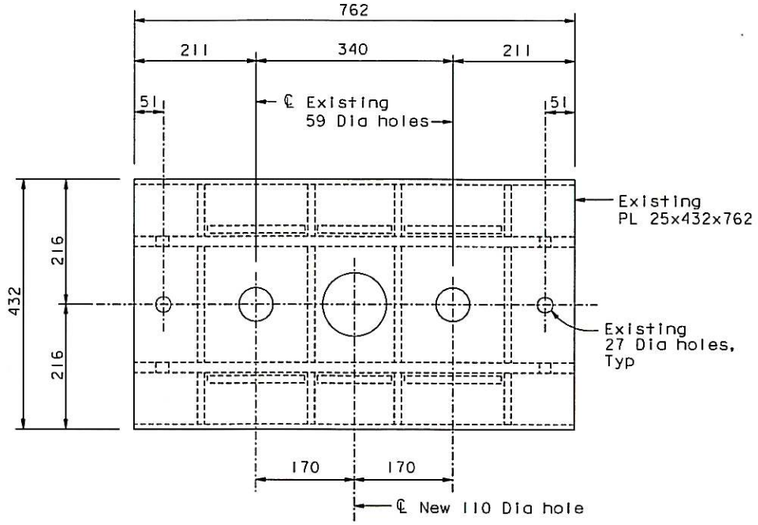

SECTION C-C
1:5

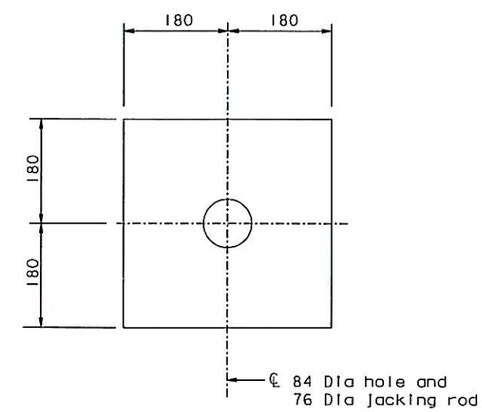

PL 75x360x360
1:5

CONTRACT CHANGE ORDER NO. 31451
SHEET 12 OF 18

REQUESTS FOR INFORMATION NOT ADDRESSED IN THIS CCO REMAIN IN FORCE

ALL DIMENSIONS ARE IN MILLIMETERS UNLESS OTHERWISE SHOWN

MARK	DATE	DESCRIPTIONS	BY	CH'D	CCO#
0	06/11/13	REMOVE, REPLACE, AND TEST SAMPLE RODS	CC	MN	31451

REVISIONS

A. Akinsanya / W. Long
DESIGN OVERSIGHT
SIGN OFF DATE 06/11/13

DESIGN	BY C. Choi	CHECKED	N. Vo
DETAILS	BY G. Mok	CHECKED	J. Denis
QUANTITIES	BY G. Mok	CHECKED	J. Denis

PREPARED FOR THE STATE OF CALIFORNIA DEPARTMENT OF TRANSPORTATION

M. Nader
PROJECT ENGINEER

BRIDGE NO. 34-0006L/R
KILOMETER POST 13.2/13.9

SAN FRANCISCO OAKLAND BAY BRIDGE
EAST SPAN SEISMIC SAFETY PROJECT
SELF-ANCHORED SUSPENSION BRIDGE
(SUPERSTRUCTURE & TOWER)

TEST RIG DETAILS NO. 19

Rev. Date: 5-18-98

ORIGINAL SCALE IN MILLIMETERS FOR REDUCED PLANS 0 10 20 30 40 50 60 70 80 90 100

CU 04
EA 0120F1

DISREGARD PRINTS BEARING EARLIER REVISION DATES

REVISION DATES (PRELIMINARY STAGE ONLY) 06/11/13

SHEET 471S19 OF

FILE => I:\bb\04-012001\sas\contract plans and cco\cco\cco#31451\1-original 06-11-13\dgn\aksrr19.dgn

100 % PS&E

USERNAME => arivera DATE PLOTTED => 18 JUN 2013 TIME PLOTTED => 13:41:42

DIST.	COUNTY	ROUTE	KILOMETER POST TOTAL PROJECT	SHEET NO.	TOTAL SHEETS
04	SF	80	13.2/13.9	888S20	1204

REGISTERED ENGINEER - CIVIL

06-11-13

PLANS APPROVAL DATE

REGISTERED PROFESSIONAL ENGINEER Marwan N. Nader No. C 054426 Exp. 12/31/13 CIVIL STATE OF CALIFORNIA

The State of California or its officers or agents shall not be responsible for the accuracy or completeness of electronic copies of this plan sheet.

T.Y. LIN / MOFFATT & NICHOL
825 BATTERY STREET
SAN FRANCISCO, CA 94111

Caltrans now has a web site! To get to the web site, go to: http://www.dot.ca.gov

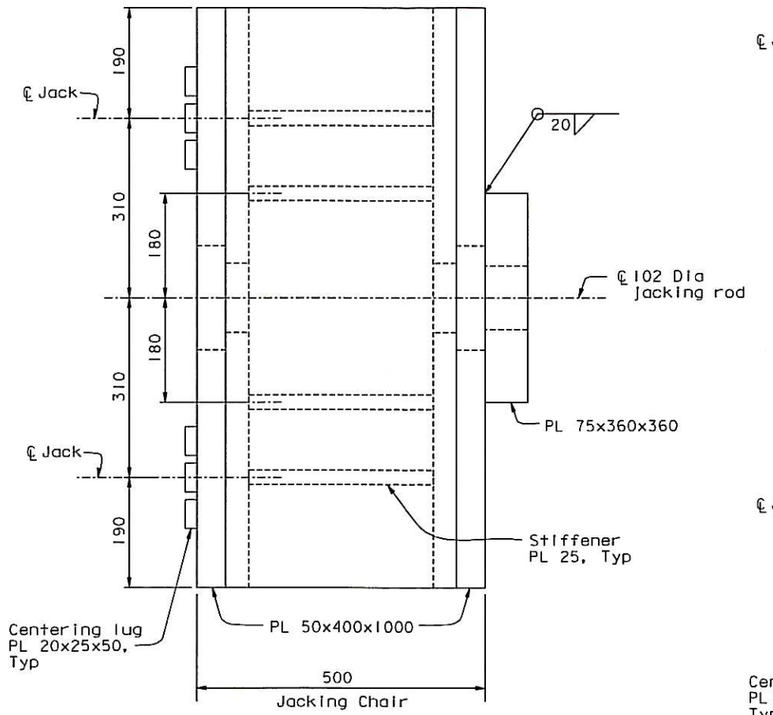

PLAN (For 300 Ton Jacks)
1:5

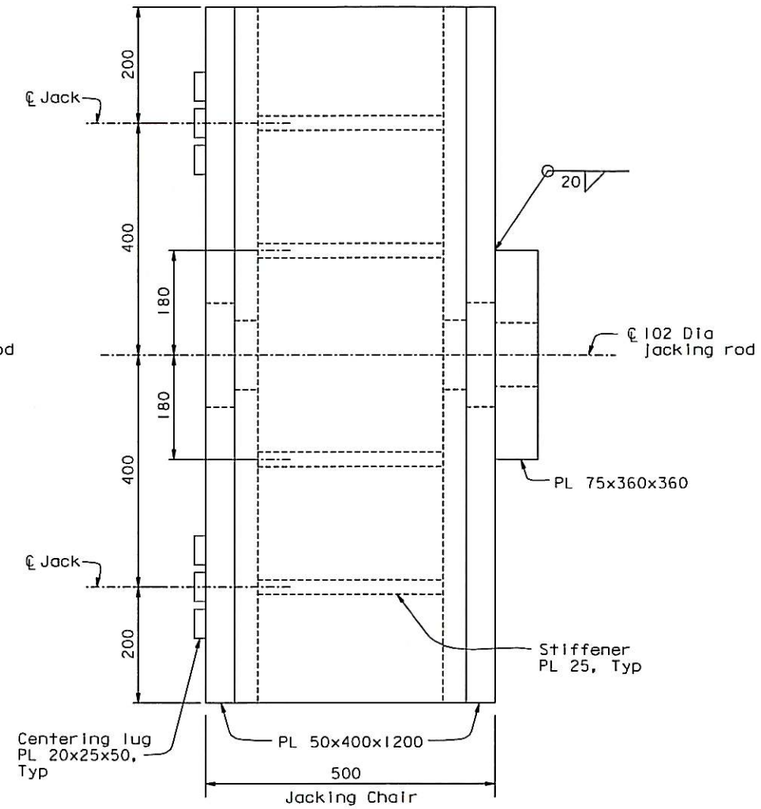

PLAN (For 400 Ton & 500 Ton Jacks)
1:5

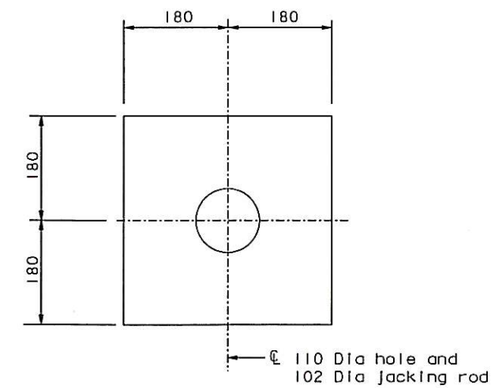

PL 75x360x360
1:5

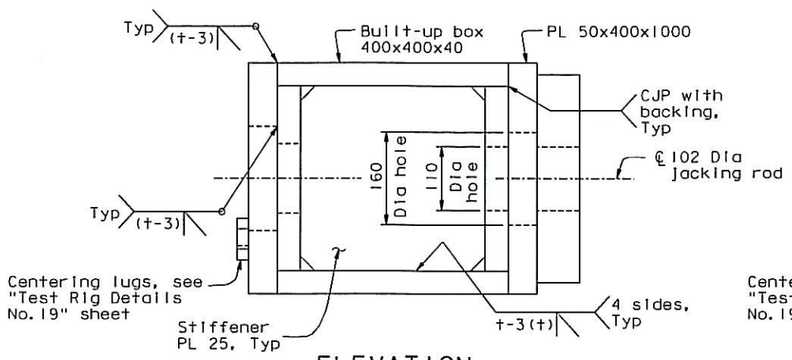

ELEVATION
1:5

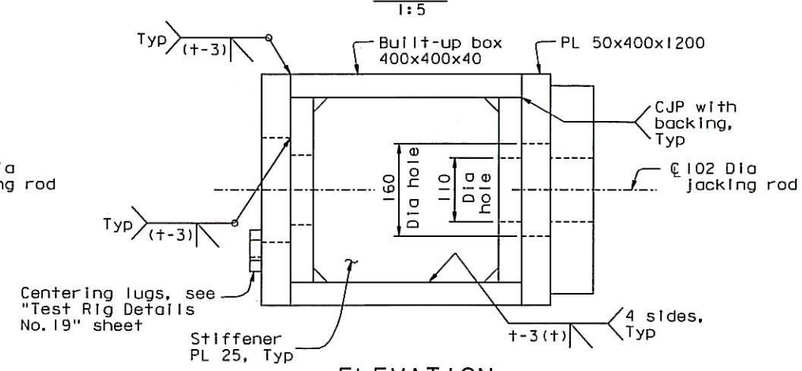

ELEVATION
1:5

NOTES:

1. All welds for built-up box shall be CJP with backing, UNO.

CONTRACT CHANGE ORDER NO. 314S1
SHEET 13 OF 18

REQUESTS FOR INFORMATION NOT ADDRESSED IN THIS CCO REMAIN IN FORCE

ALL DIMENSIONS ARE IN MILLIMETERS UNLESS OTHERWISE SHOWN

MARK	DATE	DESCRIPTIONS	BY	CH'D	CCO#
0	06/11/13	REMOVE, REPLACE, AND TEST SAMPLE RODS	CC	MN	314S1

REVISIONS

A. Akinsanya / W. Long
DESIGN OVERSIGHT
SIGN OFF DATE 06/11/13

DESIGN	BY C. Choi	CHECKED N. Vo	
DETAILS	BY G. Mok	CHECKED J. Denis	
QUANTITIES	BY G. Mok	CHECKED J. Denis	

PREPARED FOR THE STATE OF CALIFORNIA DEPARTMENT OF TRANSPORTATION

M. Nader
PROJECT ENGINEER

BRIDGE NO. 34-0006L/R
KILOMETER POST 13.2/13.9

SAN FRANCISCO OAKLAND BAY BRIDGE
EAST SPAN SEISMIC SAFETY PROJECT
SELF-ANCHORED SUSPENSION BRIDGE
(SUPERSTRUCTURE & TOWER)

TEST RIG DETAILS NO. 20

Rev. Date: 5-18-98

ORIGINAL SCALE IN MILLIMETERS FOR REDUCED PLANS 0 10 20 30 40 50 60 70 80 90 100

CU 04
EA 0120F1

DISREGARD PRINTS BEARING EARLIER REVISION DATES 06/11/13

REVISION DATES (PRELIMINARY STAGE ONLY)

SHEET 471S20 OF

FILE => I:\bb\04-0120F1\sas\contract plans and cco\cco\cco#314s1\1-original 06-11-13\dgn\aksrr20.dgn

100 % PS&E

USERNAME => arivera DATE PLOTTED => 18 JUN 2013 TIME PLOTTED => 13:42:08

DIST.	COUNTY	ROUTE	KILOMETER POST TOTAL PROJECT	SHEET NO.	TOTAL SHEETS
04	SF	80	13.2/13.9	888521	1204

REGISTERED ENGINEER - CIVIL

06-11-13
PLANS APPROVAL DATE

REGISTERED PROFESSIONAL ENGINEER Marwan N. Nader No. C 054426 Exp. 12/31/13 CIVIL STATE OF CALIFORNIA

The State of California or its officers or agents shall not be responsible for the accuracy or completeness of electronic copies of this plan sheet.

T.Y. LIN / MOFFATT & NICHOL
825 BATTERY STREET
SAN FRANCISCO, CA 94111

Caltrans now has a web site! To get to the web site, go to: http://www.dot.ca.gov

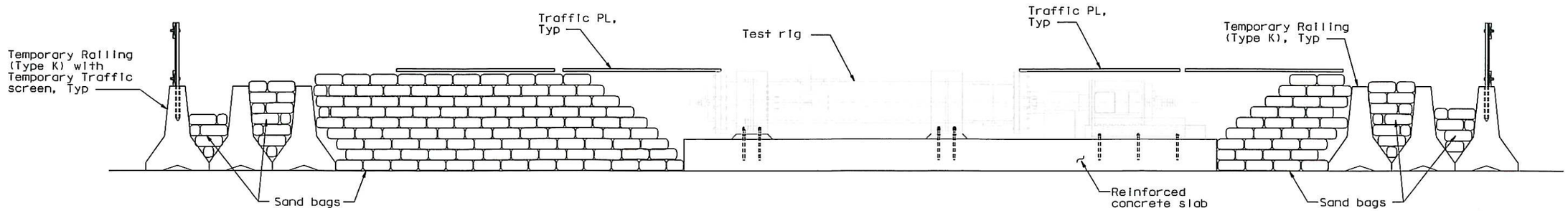

ELEVATION - REINFORCED CONCRETE SLAB FOUNDATION

NTS
(See Note 1)

NOTES:

1. For reinforced concrete slab details, see "Test Rig Details No. 22" sheet.

CONTRACT CHANGE ORDER NO. 31451
SHEET 14 OF 18

REQUESTS FOR INFORMATION NOT ADDRESSED IN THIS CCO REMAIN IN FORCE

ALL DIMENSIONS ARE IN MILLIMETERS UNLESS OTHERWISE SHOWN

A. Akinsanya / W. Long
DESIGN OVERSIGHT
SIGN OFF DATE 06/11/13

MARK	DATE	DESCRIPTIONS	BY	CH'D	CCO#
0	06/11/13	REMOVE, REPLACE, AND TEST SAMPLE RODS	CC	MN	31451

REVISIONS

DESIGN	BY C. Chol	CHECKED N. Vo	
DETAILS	BY G. Mak	CHECKED J. Denis	
QUANTITIES	BY G. Mak	CHECKED J. Denis	

PREPARED FOR THE STATE OF CALIFORNIA DEPARTMENT OF TRANSPORTATION

M. Nader
PROJECT ENGINEER

BRIDGE NO. 34-0006L/R
KILOMETER POST 13.2/13.9

SAN FRANCISCO OAKLAND BAY BRIDGE
EAST SPAN SEISMIC SAFETY PROJECT
SELF-ANCHORED SUSPENSION BRIDGE
(SUPERSTRUCTURE & TOWER)

TEST RIG DETAILS NO. 21

Rev. Date: 5-18-98

ORIGINAL SCALE IN MILLIMETERS FOR REDUCED PLANS 0 10 20 30 40 50 60 70 80 90 100

CU 04
EA 0120F1

DISREGARD PRINTS BEARING EARLIER REVISION DATES

REVISION DATES (PRELIMINARY STAGE ONLY) 06/11/13

SHEET 471S21 OF

FILE => I:\bb\04-012001\sas\contract plans and cco\cco\cco#31451\1-original 06-11-13\dgn\aksrr21.dgn

100 % PS&E

USERNAME => arivera DATE PLOTTED => 18 JUN 2013 TIME PLOTTED => 13:42:34

DIST.	COUNTY	ROUTE	KILOMETER POST TOTAL PROJECT	SHEET NO.	TOTAL SHEETS
04	SF	80	13.2/13.9	888S22	1204

REGISTERED ENGINEER - CIVIL

06-11-13

PLANS APPROVAL DATE

REGISTERED PROFESSIONAL ENGINEER Marwan N. Nader No. C 054426 Exp. 12/31/13 CIVIL STATE OF CALIFORNIA

The State of California or its officers or agents shall not be responsible for the accuracy or completeness of electronic copies of this plan sheet.

T.Y. LIN / MOFFATT & NICHOL
825 BATTERY STREET
SAN FRANCISCO, CA 94111

Caltrans now has a web site! To get to the web site, go to: http://www.dot.ca.gov

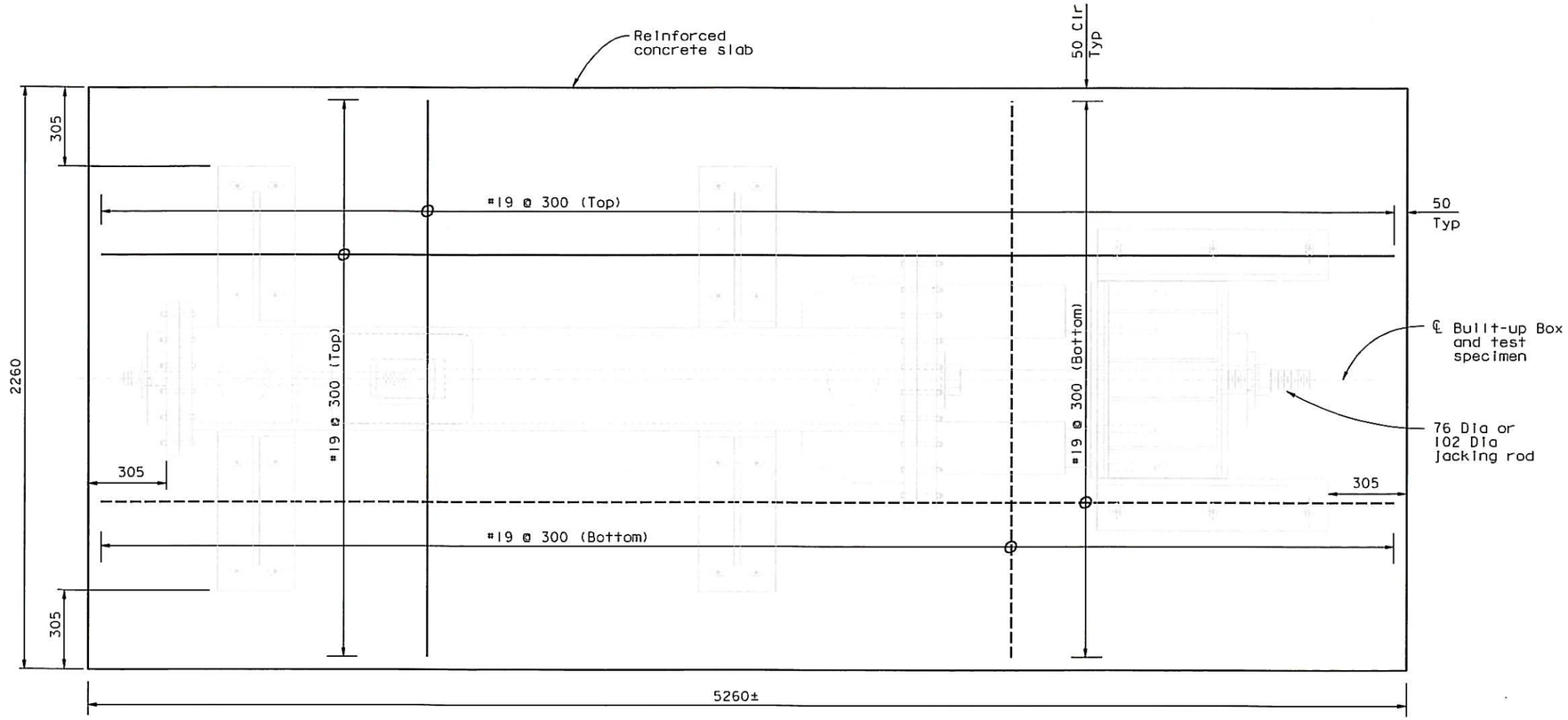

LAYOUT PLAN
1:10

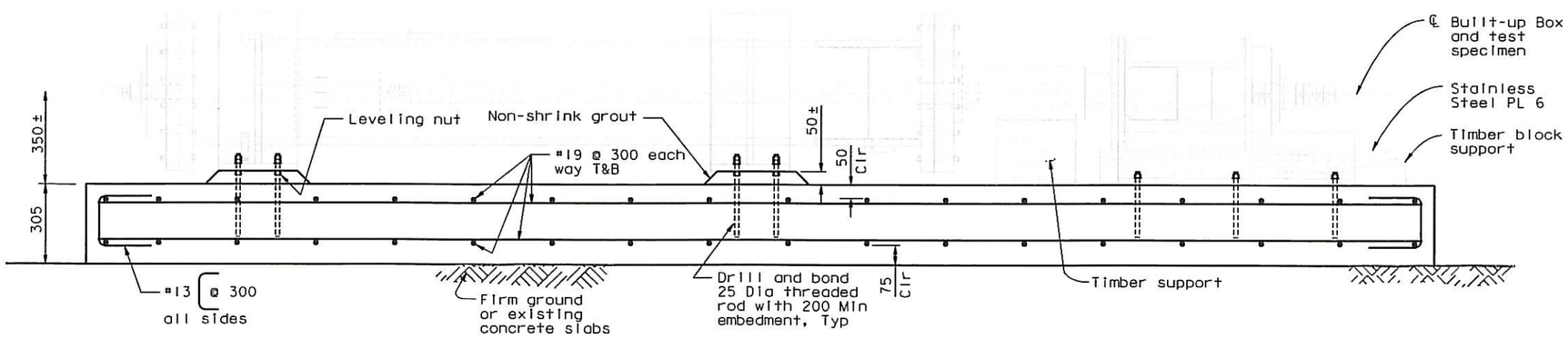

ELEVATION
1:10

NOTES:

1. For information not shown, see "Test Rig Details No.11" thru "Test Rig Details No.14" sheets.
2. Test assembly shall be placed level.
3. Concrete strength, f'c = 25 MPa @ 28 days.
4. Reinforcing steel shall be ASTM A706 with fy = 415 MPa.
5. Non-shrink grout shall have minimum compressive strength of 35 MPa @ 28 days.

CONTRACT CHANGE ORDER NO. 314S1
SHEET 15 OF 18

REQUESTS FOR INFORMATION NOT ADDRESSED IN THIS CCO REMAIN IN FORCE

ALL DIMENSIONS ARE IN MILLIMETERS UNLESS OTHERWISE SHOWN

MARK	DATE	DESCRIPTIONS	BY	CH'D	CCO#
6	06/11/13	REMOVE, REPLCAE, AND TEST SAMPLE RODS	CC	MN	314S1

REVISIONS

A. Akinsanya / W. Long
DESIGN OVERSIGHT
SIGN OFF DATE 06/11/13

DESIGN	BY C. Chol	CHECKED N. Vo	
DETAILS	BY G. Mok	CHECKED J. Denis	
QUANTITIES	BY G. Mok	CHECKED J. Denis	

PREPARED FOR THE STATE OF CALIFORNIA DEPARTMENT OF TRANSPORTATION

M. Nader
PROJECT ENGINEER

BRIDGE NO. 34-0006L/R
KILOMETER POST 13.2/13.9

SAN FRANCISCO OAKLAND BAY BRIDGE
EAST SPAN SEISMIC SAFETY PROJECT
SELF-ANCHORED SUSPENSION BRIDGE
(SUPERSTRUCTURE & TOWER)

TEST RIG DETAILS NO.22

Rev. Date: 5-18-98

ORIGINAL SCALE IN MILLIMETERS FOR REDUCED PLANS 0 10 20 30 40 50 60 70 80 90 100

CU 04
EA 0120F1

DISREGARD PRINTS BEARING EARLIER REVISION DATES → 06/11/13

REVISION DATES (PRELIMINARY STAGE ONLY)

SHEET 471S22 OF

FILE => I:\bb\04-012001\sas\contract plans and cco\cco\cco#314s1\1-original 06-11-13\dgn\aksrr22.dgn

100 % PS&E

USERNAME => arivera DATE PLOTTED => 18 JUN 2013 TIME PLOTTED => 13:42:59

DIST.	COUNTY	ROUTE	KILOMETER POST TOTAL PROJECT	SHEET NO.	TOTAL SHEETS
04	SF	80	13.2/13.9	888S23	1204

REGISTERED ENGINEER - CIVIL

07-03-13

PLANS APPROVAL DATE

REGISTERED PROFESSIONAL ENGINEER Marwan N. Nader No. C 054426 Exp. 12/31/13 CIVIL STATE OF CALIFORNIA

The State of California or its officers or agents shall not be responsible for the accuracy or completeness of electronic copies of this plan sheet.

T.Y. LIN / MOFFATT & NICHOL
825 BATTERY STREET
SAN FRANCISCO, CA 94111

Caltrans now has a web site! To get to the web site, go to: http://www.dot.ca.gov

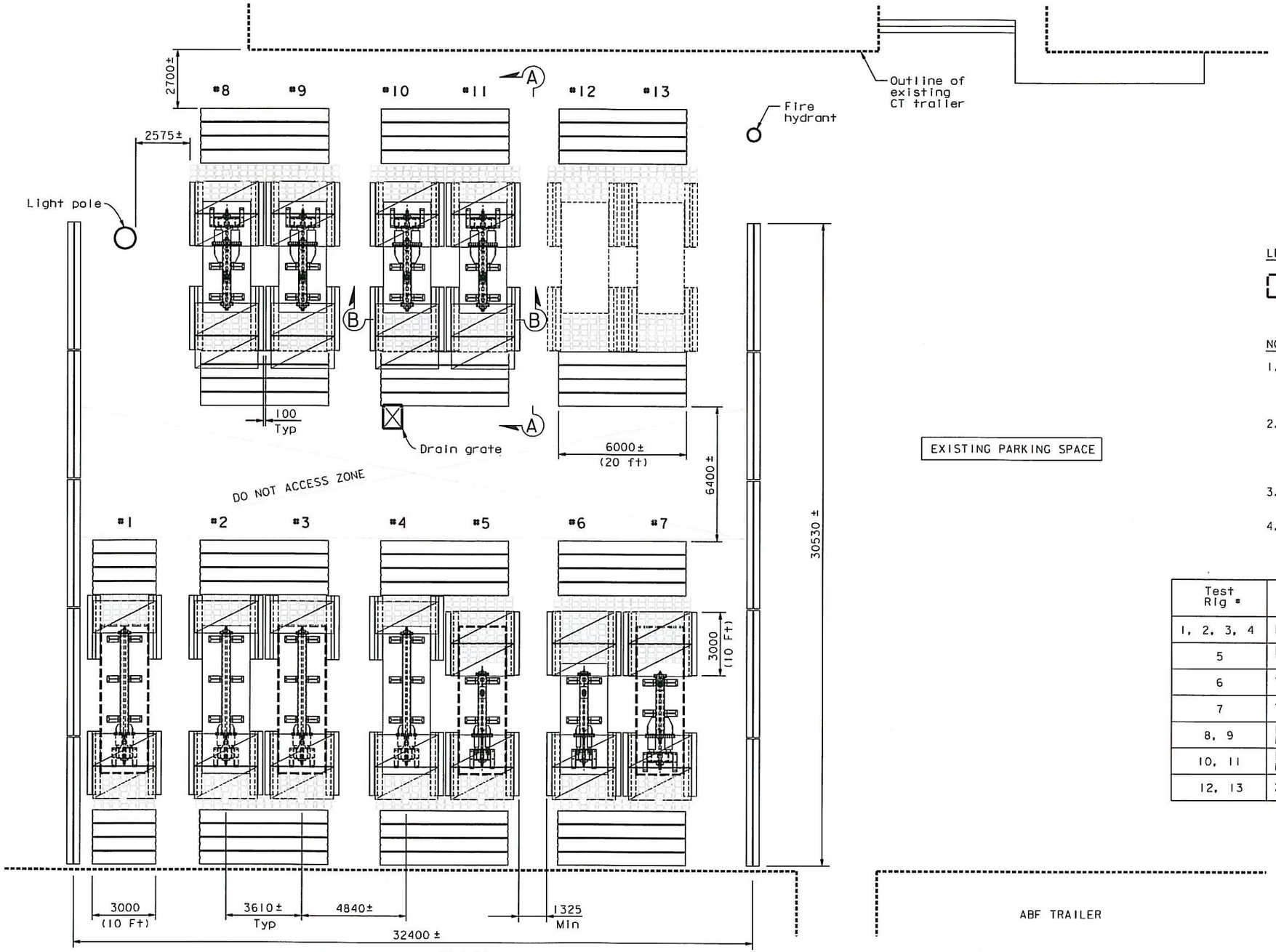

LEGEND:

Existing Concrete Slab

NOTES:

1. At the Contractor's option, General Arrangement (Alt. 1) may be used in lieu of the arrangement shown on "Test Rig Details No. 1" and "Test Rig Details No. 9" sheets.
2. Set up for Test Rigs #2, #4 and #6 must be completed prior to the commencement of testings at Locations #1, #3, #5 and #7. Otherwise, use General Arrangement (Alt. 2) on "Test Rig Details No. 24" sheet.
3. Personnel shall stay clear from the "DO NOT ACCESS ZONE" at all times during testing.
4. For Sections A-A & B-B, see " Test Rig Details No. 25" sheet.

Test Rig #	Test Specimen	Nominal Bolt Dia	Approx. Specimen Length
1, 2, 3, 4	Pier E2 Anchor Bolts	76	6600±
5	Pier E2 Bearing Bolts-Top Housing	51	1105±
6	Tower Anchorage Anchor Bolts	76	2130±
7	Tower Saddle Tie Rods	102	1600±
8, 9	PWS Strand Anchor Rod-Main Cable (roller thread)	89	450±
10, 11	PWS Strand Anchor Rod-Main Cable (cut thread)	89	450±
12, 13	2008 Bolts (To Be Determined)	76	TBD

CONTRACT CHANGE ORDER NO. 314S1
SHEET 16 OF 18

REQUESTS FOR INFORMATION NOT ADDRESSED IN THIS CCO REMAIN IN FORCE

PLAN - GENERAL ARRANGEMENT (ALT. 1)

1:100

ALL DIMENSIONS ARE IN MILLIMETERS UNLESS OTHERWISE SHOWN

100 % PS&E

A. Akinsanya / W. Long
DESIGN OVERSIGHT
SIGN OFF DATE 07/03/13

Rev. Date: 5-18-98

MARK	DATE	DESCRIPTIONS	BY	CH'D	CCO#
0	07/03/13	REMOVE AND TEST SAMPLE RODS	CC	MN	314S1

REVISIONS

DESIGN	BY	C. Choi	CHECKED	N. Vo
DETAILS	BY	G. Mok	CHECKED	J. Denis
QUANTITIES	BY	G. MOK	CHECKED	J. Denis

PREPARED FOR THE STATE OF CALIFORNIA DEPARTMENT OF TRANSPORTATION

M. Nader
PROJECT ENGINEER

BRIDGE NO. 34-0006L/R
KILOMETER POST 13.2/13.9

SAN FRANCISCO OAKLAND BAY BRIDGE
EAST SPAN SEISMIC SAFETY PROJECT
SELF-ANCHORED SUSPENSION BRIDGE
(SUPERSTRUCTURE & TOWER)

TEST RIG DETAILS NO. 23

ORIGINAL SCALE IN MILLIMETERS FOR REDUCED PLANS 0 10 20 30 40 50 60 70 80 90 100

CU 04
EA 0120F1

DISREGARD PRINTS BEARING EARLIER REVISION DATES 07/03/13

REVISION DATES (PRELIMINARY STAGE ONLY)

SHEET 471S23 OF

FILE => I:\bb\04-012001\sas\contract plans and cco\cco\cco#314s1\2-revision 07-03-13\dgn\aksrr23.dgn

USERNAME => PHUQ DATE PLOTTED => 03 JUL 2013 TIME PLOTTED => 10:56:29

DIST.	COUNTY	ROUTE	KILOMETER POST TOTAL PROJECT	SHEET NO.	TOTAL SHEETS
04	SF	80	13.2/13.9	BB8S24	1204

REGISTERED ENGINEER - CIVIL

07-03-13

PLANS APPROVAL DATE

REGISTERED PROFESSIONAL ENGINEER Marwan N. Nader No. C 054426 Exp. 12/31/13 CIVIL STATE OF CALIFORNIA

The State of California or its officers or agents shall not be responsible for the accuracy or completeness of electronic copies of this plan sheet.

T.Y. LIN / MOFFATT & NICHOL
825 BATTERY STREET
SAN FRANCISCO, CA 94111

Caltrans now has a web site! To get to the web site, go to: http://www.dot.ca.gov

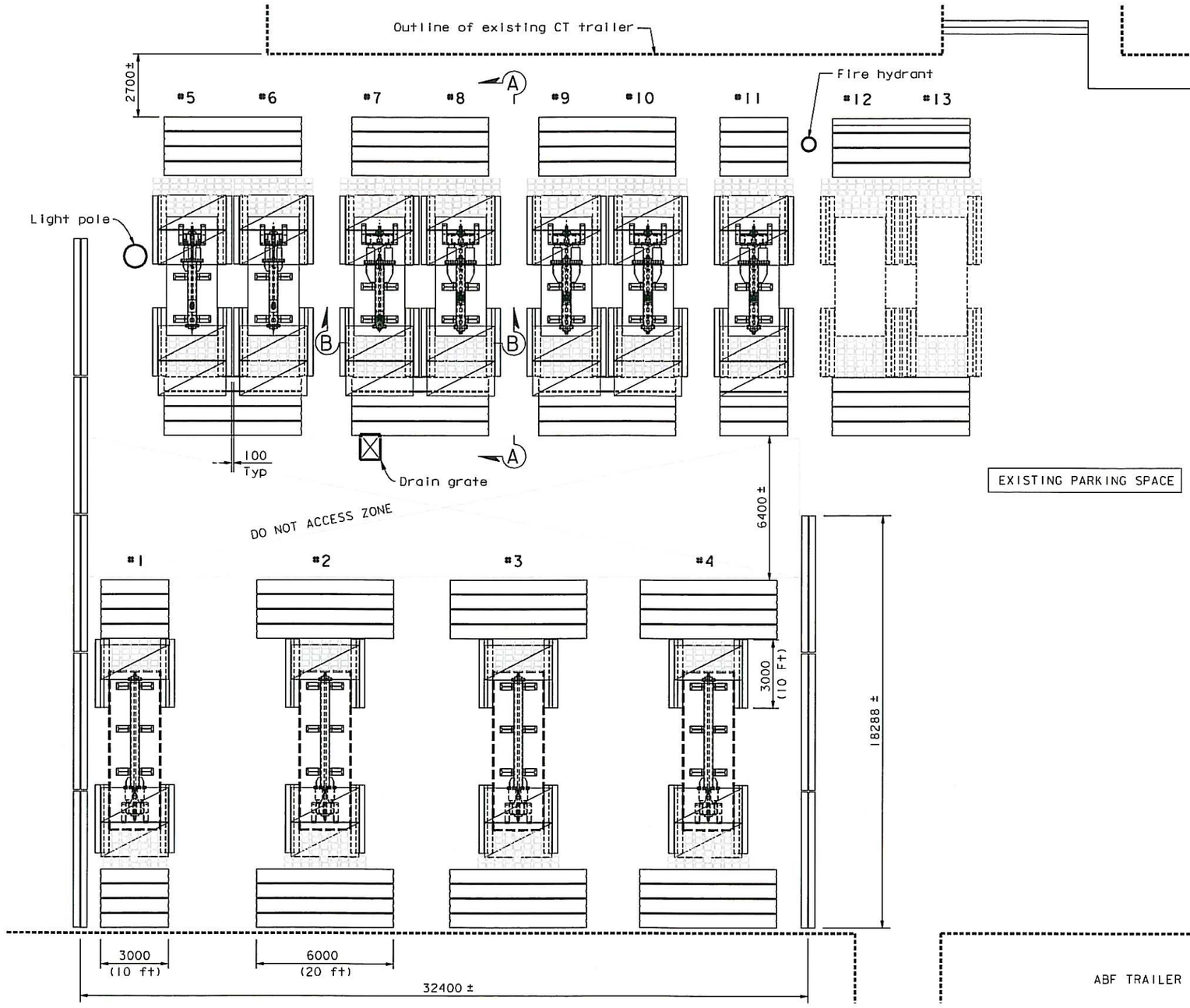

LEGEND:

Existing Concrete Slab

NOTES:

1. At the Contractor's option, General Arrangement (Alt. 2) may be used in lieu of the arrangement shown on "Test Rig Details No. 1" and "Test Rig Details No. 9" sheets.
2. Personnel shall stay clear from the "DO NOT ACCESS ZONE" at all times during testing.
3. For Sections A-A & B-B, see " Test Rig Details No. 25" sheet.

Test Rig #	Test Specimen	Nominal Bolt Dia	Approx. Specimen Length
1, 2, 3, 4	Pier E2 Anchor Bolts	76	6600±
5	Pier E2 Bearing Bolts-Top Housing	51	1105±
6	Tower Anchorage Anchor Bolts	76	2130±
7	Tower Saddle Tie Rods	102	1600±
8, 9	PWS Strand Anchor Rod-Main Cable (roller thread)	89	450±
10, 11	PWS Strand Anchor Rod-Main Cable (cut thread)	89	450±
12, 13	2008 Bolts (To Be Determined)	76	TBD

CONTRACT CHANGE ORDER NO. 31451
SHEET 17 OF 18

REQUESTS FOR INFORMATION NOT ADDRESSED IN THIS CCO REMAIN IN FORCE

PLAN - GENERAL ARRANGEMENT (ALT. 2)

1:100

ALL DIMENSIONS ARE IN MILLIMETERS UNLESS OTHERWISE SHOWN

A. Akinsanya / W. Long
DESIGN OVERSIGHT
SIGN OFF DATE 07/03/13

MARK	DATE	DESCRIPTIONS	BY	CH'D	CCO#
0	07/03/13	REMOVE AND TEST SAMPLE RODS	CC	MN	31451

REVISIONS

DESIGN	BY C. Chol	CHECKED	N. Vo
DETAILS	BY G. Mok	CHECKED	J. Denis
QUANTITIES	BY G. MOK	CHECKED	J. Denis

PREPARED FOR THE STATE OF CALIFORNIA DEPARTMENT OF TRANSPORTATION

M. Nader
PROJECT ENGINEER

BRIDGE NO. 34-0006L/R
KILOMETER POST 13.2/13.9

SAN FRANCISCO OAKLAND BAY BRIDGE
EAST SPAN SEISMIC SAFETY PROJECT
SELF-ANCHORED SUSPENSION BRIDGE
(SUPERSTRUCTURE & TOWER)

TEST RIG DETAILS NO. 24

Rev. Date: 5-18-98

ORIGINAL SCALE IN MILLIMETERS FOR REDUCED PLANS 0 10 20 30 40 50 60 70 80 90 100

CU 04
EA 0120F1

DISREGARD PRINTS BEARING EARLIER REVISION DATES

REVISION DATES (PRELIMINARY STAGE ONLY) 07/03/13

SHEET 471S24 OF

FILE => I:\bb\04-012001\sas\contract plans and cco\cco\cco#31451\2-revision 07-03-13\dgn\aksrr24.dgn

100 % PS&E

DATE PLOTTED => 03 JUL 2013 TIME PLOTTED => 11:00:24

USERNAME => PHUA

DIST.	COUNTY	ROUTE	KILOMETER POST TOTAL PROJECT	SHEET NO.	TOTAL SHEETS
04	SF	80	13.2/13.9	888S25	1204

REGISTERED ENGINEER - CIVIL

07-03-13

PLANS APPROVAL DATE

REGISTERED PROFESSIONAL ENGINEER Marwan N. Nader No. C 054426 Exp. 12/31/13 CIVIL STATE OF CALIFORNIA

The State of California or its officers or agents shall not be responsible for the accuracy or completeness of electronic copies of this plan sheet.

T.Y. LIN / MOFFATT & NICHOL
825 BATTERY STREET
SAN FRANCISCO, CA 94111

Caltrans now has a web site! To get to the web site, go to: http://www.dot.ca.gov

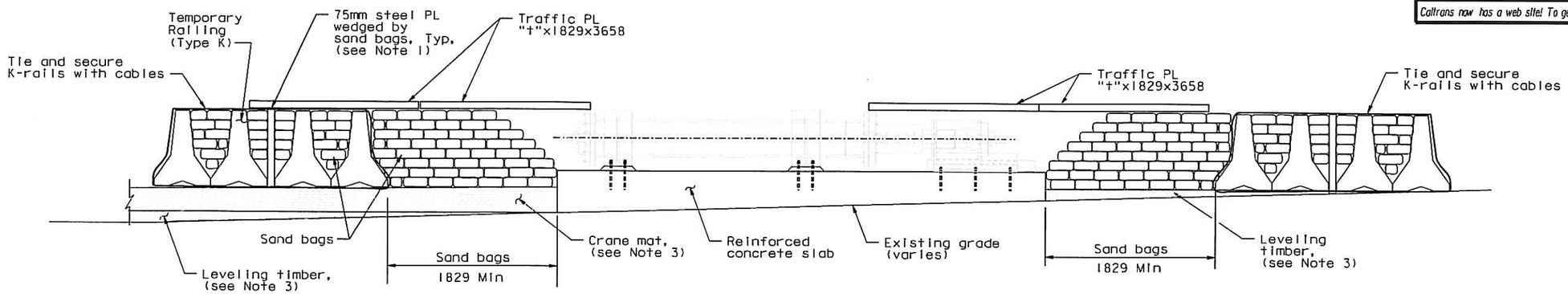

SECTION A-A

1:25

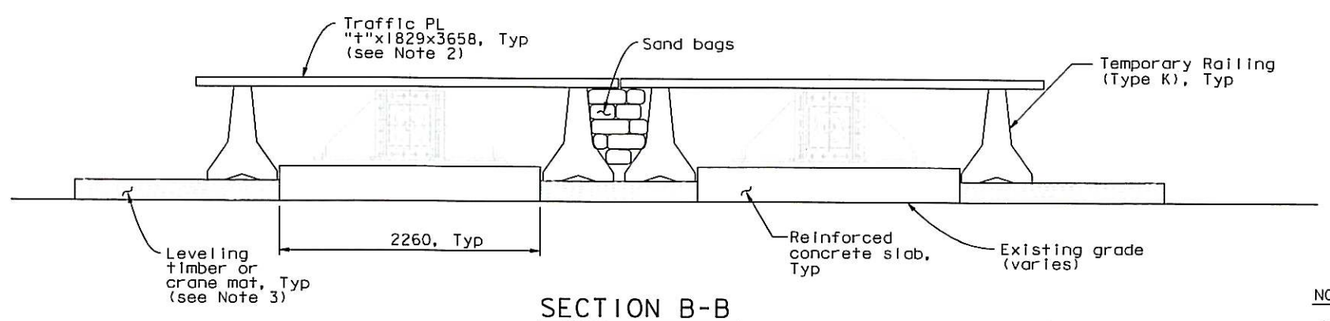

SECTION B-B

1:25

NOTES:

1. Install steel plate at full length of the temporary railing (Type K).
2. Tie-down Traffic PL to temporary railing (Type K).
3. Leveling timber and crane mat shall be used as necessary to adjust for traffic plate height.
4. Thickness "t" shall be 50 minimum.

100 % PS&E

CONTRACT CHANGE ORDER NO. 314S1
SHEET 18 OF 18

REQUESTS FOR INFORMATION NOT ADDRESSED IN THIS CCO REMAIN IN FIRST CCO

ALL DIMENSIONS ARE IN MILLIMETERS UNLESS OTHERWISE SHOWN

A. Akinsanya / W. Long
DESIGN OVERSIGHT
SIGN OFF DATE 07/03/13

MARK	DATE	DESCRIPTIONS	BY	CH'D	CCO#
0	07/03/13	REMOVE AND TEST SAMPLE RODS	CC	MN	314S1

REVISIONS

DESIGN	BY C. Choi	CHECKED N. Vo	
DETAILS	BY G. Mok	CHECKED J. Denis	
QUANTITIES	BY G. MOK	CHECKED J. Denis	

PREPARED FOR THE STATE OF CALIFORNIA DEPARTMENT OF TRANSPORTATION

M. Nader
PROJECT ENGINEER

BRIDGE NO. 34-0006L/R
KILOMETER POST 13.2/13.9

SAN FRANCISCO OAKLAND BAY BRIDGE
EAST SPAN SEISMIC SAFETY PROJECT
SELF-ANCHORED SUSPENSION BRIDGE
(SUPERSTRUCTURE & TOWER)

TEST RIG DETAILS NO. 25

Rev. Date: 5-18-98

ORIGINAL SCALE IN MILLIMETERS FOR REDUCED PLANS 0 10 20 30 40 50 60 70 80 90 100

CU 04
EA 0120F1

DISREGARD PRINTS BEARING EARLIER REVISION DATES 07/03/13

REVISION DATES (PRELIMINARY STAGE ONLY)

SHEET 471S25 OF

FILE => I:\bb\04-012001\sas\contract plans and cco\cco\cco#314s1\2-revision 07-03-13\dgn\aksrr25.dgn

USERNAME => PHUA DATE PLOTTED => 03 JUL 2013 TIME PLOTTED => 11:03:36