STATE OF CALIFORNIA • DEPARTMENT OF TRANSPORTATION

CONTRACT CHANGE ORDER INPUT

CEM-4901 (REV 5/1993) CT# 7541-3516-2

ADA Notice

For individuals with sensory disabilities, this document is available in alternate formats. For information call (916) 654-6410 or TDD (916) 654-3880 or write Records and Forms Management, 1120 N Street, MS-89, Sacramento, CA 95814.

C A S O A C

CONTRACT NO. 0 4 0 1 2 0 F 4 (1–8) CCO NO. 2 9 8 (9–13) SUPPL. 0 1

CONSTRUCTION DEPT. USE ONLY ☐ FUNCTION (14) ☐ OVERRIDE (15)

CARD TYPE 1 (16)

C. C. O. DESCRIPTION: I E R B Y S P l a n n i n g R e v i s e d (17–56)

NET $ CHANGE THIS CCO: + - 0 0 0 0 0 0 0 . 0 0 (58–66)

APPROVAL DATE: 0 5 - 2 3 - 1 3 (67)

TIME EXTENSION DAYS: + - 0 0 0 (74)

CATEGORY: C X X X (77)

CARD TYPE 2 (16)

PAYMENT METHOD						$ AMOUNT
EW ☒ (17)	AC ☐ (18)	FA ☐ (19)	LS ☒ (20)	UP ☐		+ - 0 0 0 0 0 0 0 . 0 0 (23–31)
EW ☐	AC ☐	FA ☐	LS ☐	UP ☐		+ - .
EW ☐	AC ☐	FA ☐	LS ☐	UP ☐		+ - . (23–31)

CARD TYPE 4 (16)

NET $ AMOUNT BRIDGE WORK THIS CCO

+ - . (18–26)

CARD TYPE 3 (16)

ITEM NUMBER		QUANTITY	ITEM NUMBER		QUANTITY
(17–19)	+ -	(21–32)	(17–19)	+ -	(21–32)
	+ -			+ -	
	+ -			+ -	
	+ -			+ -	
	+ -			+ -	
	+ -			+ -	
	+ -			+ -	
	+ -			+ -	
(17–19)	+ -	(21–32)	(17–19)	+ -	(21–32)

CARD TYPE 5 (16)

FEDERAL PARTICIPATION: N (17)

P = PARTICIPATING

M = NON-PARTICIPATING (MAINTENANCE)

N = NON-PARTICIPATING (OTHER THAN MAINTENANCE)

R = NON-PARTICIPATING (REIMBURSEMENT BY OTHERS)

S = PARTICIPATING IN PART

IF PARTICIPATING IN PART (S), BREAKDOWN COST AS FOLLOWS: (INPUT TYPE AS P,M,N,R)

TYPE	COST
☐ (18)	(19–27)
☐	
☐	
☐ (18)	(19–27)

FEDERAL SEGREGATION (IF MORE THAN ONE FUNDING SOURCE)

☐ (28) E = CCO to be funded as per contract ☐ (29) F = CCO to be funded as follows:

FEDERAL FUNDING SOURCE	PERCENT
(30–44)	(45)
(30–44)	(45)

IN CASE OF QUESTIONS CONTACT: *NAME*	BUSINESS PHONE	VERIFY
Joe Garcia	(510) 622-5669	

CONTRACT CHANGE ORDER

Change Requested by: Engineer

CCO: 298 Suppl. No. 1 Contract No. 04 – 0120F4 Road SF-80-13.2/13.9 **FED. AID LOC.:**

To: **AMERICAN BRIDGE/FLUOR ENTERPRISES INC A JOINT VENTURE**

You are directed to make the following changes from the plans and specifications or do the following described work not included in the plans and specifications for this contract. ***NOTE: This change order is not effective until approved by the Engineer.***

Description of work to be done, estimate of quantities and prices to be paid. (Segregate between additional work at contract price, agreed price and force account.) Unless otherwise stated, rates for rental of equipment cover only such time as equipment is actually used and no allowance will be made for idle time. This last percentage shown is the net accumulated increase or decrease from the original quantity in the Engineer's Estimate.

Extra Work at Lump Sum:

Revised Contract Change Order (CCO) 298 S0 Attachments A and B for building rehabilitation construction at Interurban Electric Railway Bridge Yard Shop (IERBYS) on pages 2 through 608.

Site rehabilitation construction at Interurban Electric Railway Bridge Yard Shop (IERBYS) as identified in Attachments C and D on pages 609 through 871.

There shall be no cost or credit to the State by reason of this change. Performance of the various items of work as shown in the attached plans will be included in a separate CCO.

Estimated Cost: Increase ☒ **Decrease** ☐ **$0.00**

By reason of this order the time of completion will be adjusted as follows: 0 Days

Submitted by Bill Casey

Signature **Resident Engineer** Darryl Schram, Senior T.E. **Date** 5-20-13

Approval Recommended by

Signature **Supervising Transportation Engineer** William Casey, Supervising T.E. **Date** 5-20-13

Engineer Approval by

Signature **Supervising Transportation Engineer** William Casey, Supervising T.E. **Date** 5-23-13

We the undersigned contractor, have given careful consideration to the change proposed and agree, if this proposal is approved, that we will provide all equipment, furnish the materials, except as otherwise be noted above, and perform all services necessary for the work above specified, and will accept as full payment therefor the prices shown above.

NOTE: If you, the contractor, do not sign acceptance of this order, your attention is directed to the requirements of the specifications as to proceeding with the ordered work and filing a written protest within the time therein specified.

Contractor Acceptance by

Signature (Print name and title) BRIAN A. PETERSEN - PROJECT DIRECTOR **Date** 21 MAY 13

DIST	COUNTY	ROUTE	POST MILES TOTAL PROJECT	SHEET No	TOTAL SHEETS
04	ALA	80	2.0	1204f	1204

REGISTERED ARCHITECT — DATE 03/27/13

PLANS APPROVAL DATE 03/27/13

LICENSED ARCHITECT — GREGORY P. BAKER — C-16884 — 10.31.2013 RENEWAL DATE — STATE OF CALIFORNIA

The state of California or its officers or agents shall not be responsible for the accuracy or completeness of scanned copies of this plan sheet.

HNTB CORPORATION
1111 BROADWAY
9TH FLOOR
OAKLAND, CA 94607

HNTB Corporation
Engineers Architects Planners

IERBYS TEMPORARY IMPROVEMENTS

Interurban Electric Railway Bridge Yard Shop

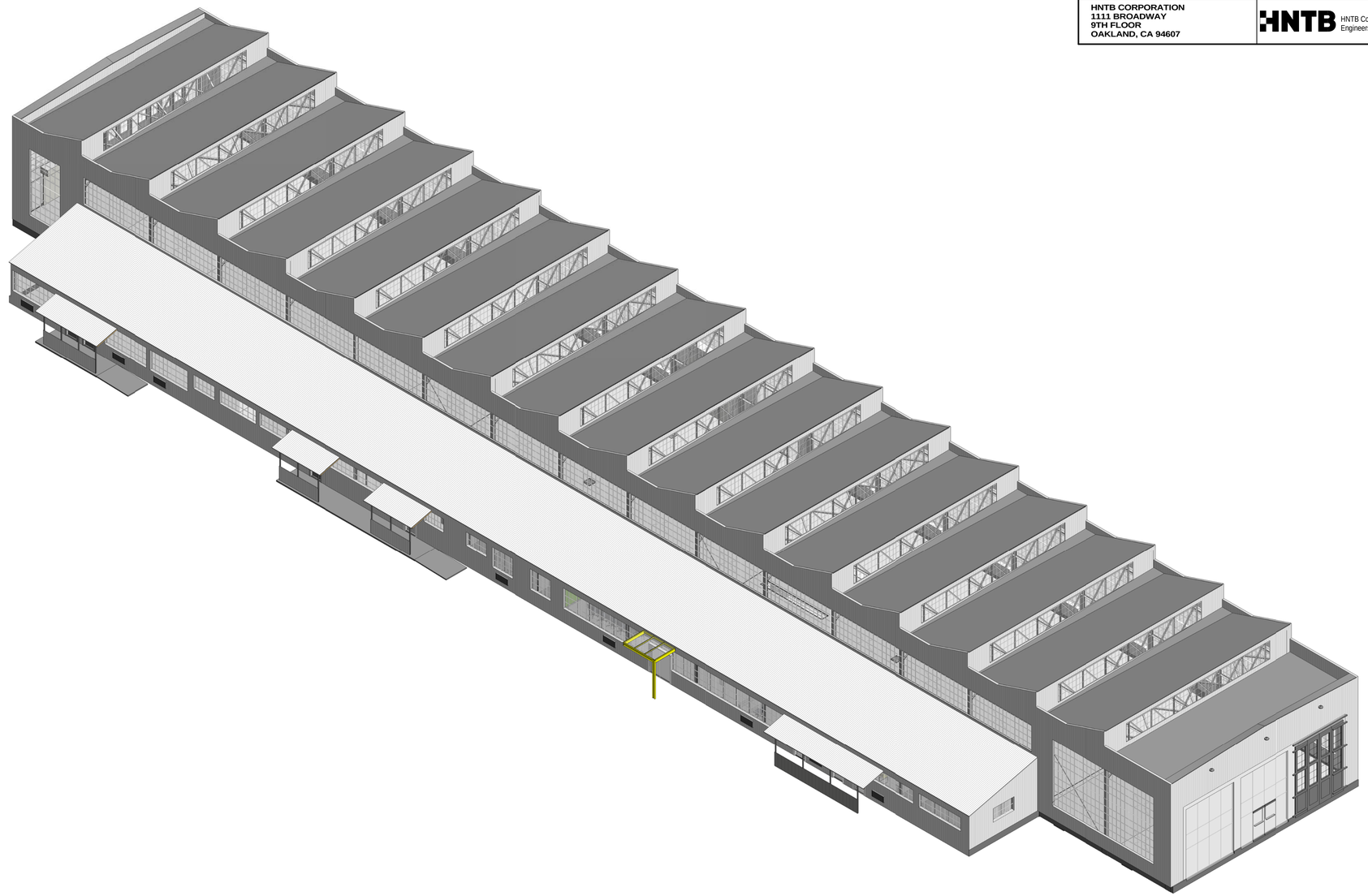

VICINITY PLAN

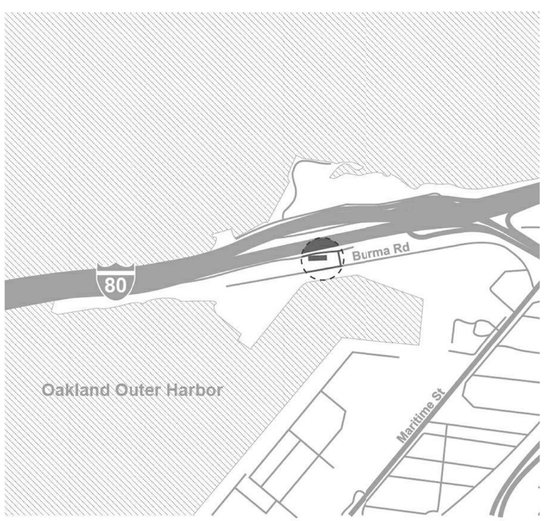

05/03/13 PERMIT SET

5/2/2013 3:07:57 PM

SAN FRANCISCO OAKLAND BAY BRIDGE
EAST SPAN SEISMIC SAFETY PROJECT

IERBYS TEMPORARY IMPROVEMENTS - BUILDING

COVER SHEET

SHEET G000

Quincy Wong
DESIGN OVERSIGHT

03/27/13
SIGN OFF DATE

	BY	CHECKED
DESIGN	COREY SCHURR	GREGORY BAKER
DETAILS		
QUANTITIES		

PREPARED FOR THE
STATE OF CALIFORNIA
DEPARTMENT OF TRANSPORTATION

KAREN Y. WANG
PROJECT ENGINEER

BRIDGE NO

POST MILES 2.0

DESIGN DETAIL SHEET (ENGLISH) (REV. 03/14/12)

ORIGINAL SCALE IN INCHES FOR REDUCED PLANS 0 1 2 3

UNIT: 04
PROJECT NUMBER AND PHASE:
CONTRACT NO.: 0120F4

DISREGARD PRINTS BEARING EARLIER REVISION DATES

REVISION DATES

SHEET 01 OF 66

C:\Users\cschurr\Documents\56185_Gateway Park - Central_cschurr.rvt

DIST	COUNTY	ROUTE	POST MILES TOTAL PROJECT	SHEET No	TOTAL SHEETS
04	ALA	80	2.0	1204g	1204

REGISTERED ARCHITECT 03/27/13 DATE

03/27/13
PLANS APPROVAL DATE

LICENSED ARCHITECT
GREGORY P. BAKER
C-16884
10.31.2013
RENEWAL DATE
STATE OF CALIFORNIA

The state of California or its officers or agents shall not be responsible for the accuracy or completeness of scanned copies of this plan sheet.

HNTB CORPORATION
1111 BROADWAY
9TH FLOOR
OAKLAND, CA 94607

HNTB Corporation
Engineers Architects Planners

PROJECT INFORMATION

APPLICABLE CODES:	2010 CALIFORNIA BUILDING CODE (CBC) 2010 CALIFORNIA MECHANICAL CODE 2010 CALIFORNIA PLUMBING CODE 2010 CALIFORNIA ELECTRICAL CODE 2010 CALIFORNIA GREEN BUILDING STANDARDS CODE 2010 CALIFORNIA ENERGY CODE 2010 CALIFORNIA FIRE CODE (CFC) 2010 AMERICANS WITH DISABILITIES ACT NFPA 13 (FIRE SPRINKLERS, FIRE PUMPS, FIRE SERVICE MAINS)
OCCUPANCY CLASSIFICATION:	THE BUILDING IS A WAREHOUSE THAT HAS BEEN CONVERTED TO ACCOMODATE MIXED PRIMARY USE GROUPS INCLUDING: - ADMINISTRATIVE (GROUP B) - ASSEMBLY (ACCESSORY TO GROUP B IN ACCORDANCE W/ CBC SECTION 508.2), & - STORAGE (GROUPS S-1 & S-2).
TYPF OF CONSTRUCTION:	TYPE III-B CONSTRUCTION WITH NONCOMBUSTIBLE EXTERIOR WALLS AND COMBUSTIBLE ROOF CONSTRUCTION.
BUILDING HEIGHT:	1 STORY - 27'-0"
BUILDING AREA:	RENOVATED AREA 15,630 SF TOTAL BUILDING AREA 23,640 SF
ALLOWABLE HEIGHT: 55'-0"	FULLY SPRINKLERED

PROJECT DIRECTORY

CLIENT

CALTRANS

Ken Terpstra, Project Manager
ken_terpstra@dot.ca.gov

Project Manager

Karen Wang
Direct: (510) 301- 8926
kwang@hntb.com

ARCHITECT

HNTB Architecture
601 W. 5th St. Suite 1000
Los Angeles, CA 90071
Main: (213)403-1000

Gregory Baker
gpbaker@hntb.com

Fernando Vazquez
fvazquez@hntb.com

CONSULTANTS

STRUCTURAL

Forell/Elsesser
160 Pine St.
San Francisco, CA 94111
Main: (415)837-0700/3015
Fax: (415)837-0800

Rene Vegnos, Principal
rvignos@forell.com

Chris Petteys, Senior Associate
c.petteys@forell.com

LANDSCAPE

HNTB San Jose
1735 Technology Drive, Suite 650
San Jose, CA 95110

Stuart Bussian
Main: (510)587-8741
sbussian@hntb.com

CIVIL

HNTB Oakland
1111 Broadway, 9th Floor
Oakland, CA 94607

John Mountin
jmountin@hntb.com

MEP

Flack + Kurtz
405 Howard St. Suite 500
San Francisco, CA 94105
Main: (415)398-3833

Andrew Harrington, Project Manager
Direct: (415)402-5836
andrew.harrington@wspfk.com

LIGHTING

Horton Lees Brogden
8580 Washington Boulevard
Culver City, CA 90232
Main: (310)837-0929

Tina Aghassian, Project Manager
Main: (310)837-0929 x319
taghassian@hlblighting.com

SHEET INDEX

Sheet Number	Sheet Name	FINAL CD
06 - Mechanical		
M000	MECHANICAL LEGEND AND ABBREVIATIONS	X
M001	MECHANICAL SCHEDULES	X
M002	MECHANICAL TITLE 24	X
M003	MECHANICAL TITLE 24	X
M004	MECHANICAL TITLE 24	X
M101	MECHANICAL DEMOLITION FLOOR PLAN	X
M201	MECHANICAL CONSTRUCTION FLOOR PLAN	X
M601	MECHANICAL DETAILS	X
07 - Electrical		
E000	ELECTRICAL LEGEND AND ABBREVIATIONS	X
E001	ELECTRICAL LIGHTING FIXTURE SCHEDULE AND TITLE 24 CALCULATIONS	X
E002	ELECTRICAL TITLE 24 CALCULATIONS	X
E100	ELECTRICAL SITE PLAN	X
E101	ELECTRICAL DEMOLITION PLAN	X
E201	ELECTRICAL CONSTRUCTION FLOOR PLAN - POWER	X
E301	ELECTRICAL CONSTRUCTION FLOOR PLAN - LIGHTING	X
E601	ELECTRICAL SCHEDULES AND PARTIAL RISER DIAGRAM	X
E602	ELECTRICAL SCHEDULES	X
08 - Plumbing & Fire Protection		
P000	PLUMBING & FIRE PROTECTION LEGEND AND ABBREVIATIONS	X
P001	PLUMBING & FIRE PROTECTION SCHEDULES	X
P101	PLUMBING & FIRE PROTECTION DEMOLITION FLOOR PLAN	X
P201	PLUMBING & FIRE PROTECTION CONSTRUCTION FLOOR PLAN	X
P301	PLUMBING & FIRE PROTECTION ENLARGED PLANS	X
P601	PLUMBING & FIRE PROTECTION DETAILS	X
P602	PLUMBING & FIRE PROTECTION DETAILS	X
P603	PLUMBING & FIRE PROTECTION DETAILS	X

Grand total: 66

Sheet Number	Sheet Name	FINAL CD
01 - General		
G000	COVER SHEET	X
G001	PROJECT INFO	X
G002	ADA GUIDELINES	X
G003	CODE / LIFE SAFETY	X
G004	FIRE DEPARTMENT ACCESS	X
02 - Demo		
D101	DEMO FLOOR PLAN	X
05 - Architectural		
A100	SITE PLAN	X
A101	FLOOR PLAN	X
A200	EXISTING FLOOR PLAN	X
A201	ENLARGED FLOOR PLAN	X
A210	ENLARGED FLOOR PLAN - LOW BAY	X
A211	ENLARGED FLOOR PLAN - LOW BAY	X
A212	FURNITURE PLAN	X
A220	RESTROOM PLANS AND ELEVATIONS	X
A230	PARTIAL ROOF PLAN	X
A300	ELEVATIONS	X
A301	ENLARGED ELEVATIONS	X
A302	ENLARGED ELEVATIONS	X
A303	ENLARGED ELEVATIONS - SIGNAGE	X
A310	ENLARGED ELEVATIONS	X
A311	ENTRY CANOPY	X
A320	INTERIOR ELEVATIONS	X
A321	INTERIOR ELEVATIONS	X
A400	OVERALL SECTIONS	X
A401	ENLARGED SECTIONS	X
A402	ENLARGED SECTION LOOKING EAST	X
A403	ENLARGED SECTION AT BAY, TYP	X
A500	OVERALL REFLECTED CEILING PLAN	X
A501	ENLARGED REFLECTED CEILING PLAN	X
A600	SCHEDULES	X
A601	WALL TYPES	X
A610	EXTERIOR DETAILS	X
A611	EXTERIOR DETAILS	X
A612	EXTERIOR DETAILS	X
A620	INTERIOR DETAILS	X
A621	INTERIOR DETAILS	X
A622	INTERIOR DETAILS	X
A623	INTERIOR DETAILS	X
A624	INTERIOR DETAILS	X
05 - Structural		
S601	STRUCTURAL DETAILS	X
S602	STRUCTURAL DETAILS	X

05/03/13 PERMIT SET

5/2/2013 3:08:02 PM

SAN FRANCISCO OAKLAND BAY BRIDGE
EAST SPAN SEISMIC SAFETY PROJECT

IERBYS TEMPORARY IMPROVEMENTS - BUILDING

PROJECT INFO

SHEET G001

Quincy Wong
DESIGN OVERSIGHT

03/27/13
SIGN OFF DATE

	BY	CHECKED
DESIGN	COREY SCHURR	GREGORY BAKER
DETAILS	BY	CHECKED
QUANTITIES	BY	CHECKED

PREPARED FOR THE
STATE OF CALIFORNIA
DEPARTMENT OF TRANSPORTATION

KAREN Y. WANG
PROJECT ENGINEER

BRIDGE NO

POST MILES 2.0

DESIGN DETAIL SHEET (ENGLISH) (REV. 03/14/12)

ORIGINAL SCALE IN INCHES FOR REDUCED PLANS 0 1 2 3

UNIT: 04
PROJECT NUMBER AND PHASE:
CONTRACT NO.: 0120F4

DISREGARD PRINTS BEARING EARLIER REVISION DATES

REVISION DATES ___ ___ ___ ___

SHEET 02 OF 66

C:\Users\cschurr\Documents\56185_Gateway Park - Central_cschurr.rvt

DIST	COUNTY	ROUTE	POST MILES TOTAL PROJECT	SHEET No	TOTAL SHEETS
04	ALA	80	2.0	1204h	1204

REGISTERED ARCHITECT — DATE 03/27/13

PLANS APPROVAL DATE 03/27/13

LICENSED ARCHITECT — GREGORY P. BAKER — C-16884 — 10.31.2013 RENEWAL DATE — STATE OF CALIFORNIA

The state of California or its officers or agents shall not be responsible for the accuracy or completeness of scanned copies of this plan sheet.

HNTB CORPORATION
1111 BROADWAY
9TH FLOOR
OAKLAND, CA 94607

HNTB Corporation Engineers Architects Planners

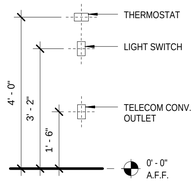

TYP MOUNTING HEIGHTS (8)
1/2" = 1'-0"

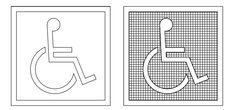

INTERNATIONAL SYMBOL OF ACCESSIBILITY (ISA)

ACCESSIBILITY SYMBOL (7)
1/2" = 1'-0"

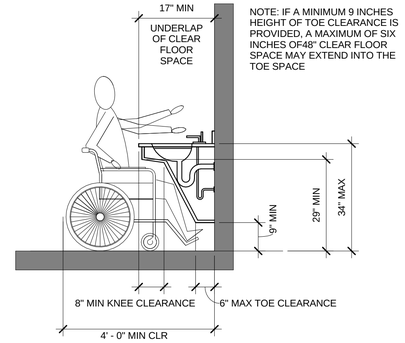

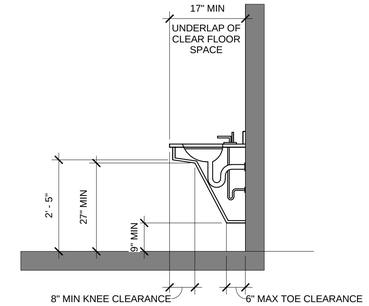

ADA - SINK CLEARANCE (4)
1/2" = 1'-0"

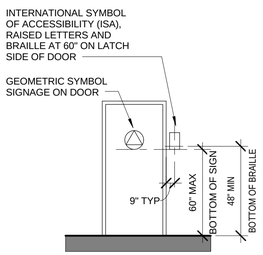

NOTE: PROVIDE (1) SIGN PER TOILET COMPLYING WITH ADA LOCAL CODE. SIGN TO HAVE TACTILE AND GRADE 2 BRAILLE CHARACTERS AND ISA PICTOGRAM. SIGN SIZE 8" X 8". COLOR: GREY WITH WHITE CHARACTERS (TYP)

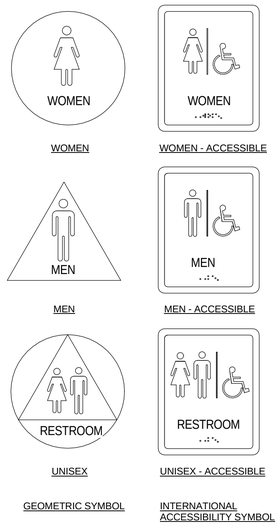

WOMEN — WOMEN - ACCESSIBLE
MEN — MEN - ACCESSIBLE
UNISEX — UNISEX - ACCESSIBLE
GEOMETRIC SYMBOL — INTERNATIONAL ACCESSIBILITY SYMBOL

TOILET ROOM DOOR SIGNAGE (6)
1/2" = 1'-0"

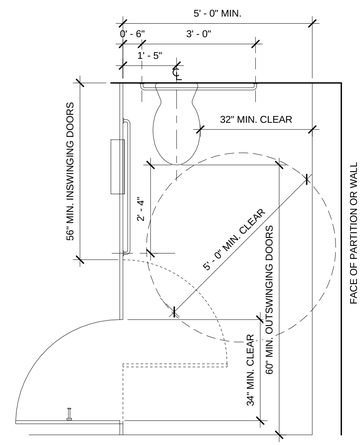

ADA - TOILET PARTITION PLANS (3)
1/2" = 1'-0"

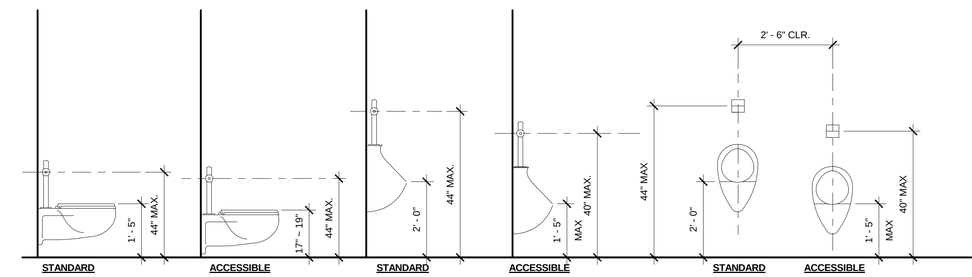

NOTES:
1. THIS DRAWING SHOWS THE MOUNTING HEIGHTS OF THE STANDARD ACCESORIES. SEE PLANS FOR MORE INFORMATION.
2. INSULATE THE HOT WATER AND DRAIN PIPES UNDER EACH ACCESSIBLE LAVATORY.
3. THERE SHALL BE NO SHARP OR ABRASIVE SURFACES UNDER LAVATORIES.
4. FAUCET CONTROLS AT ACCESSIBLE LAVATORY SHALL BE OPERABLE WITH ONE HAND WITHOUT TIGHT GRASPING, PINCHING, OR TWISTING OF THE WRIST TO OPERATE.

ADA - RESTROOM FIXTURES (2)
1/2" = 1'-0"

05/03/13 PERMIT SET

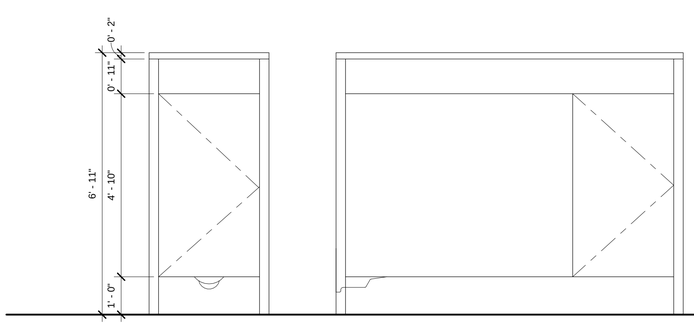

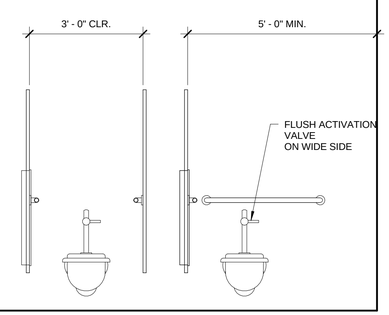

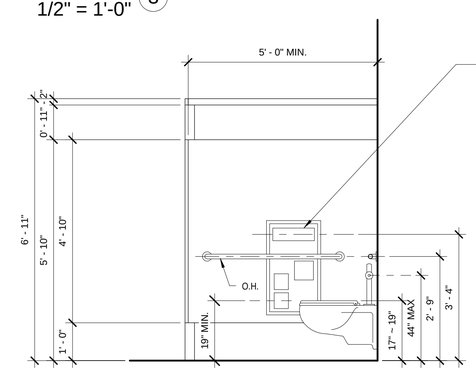

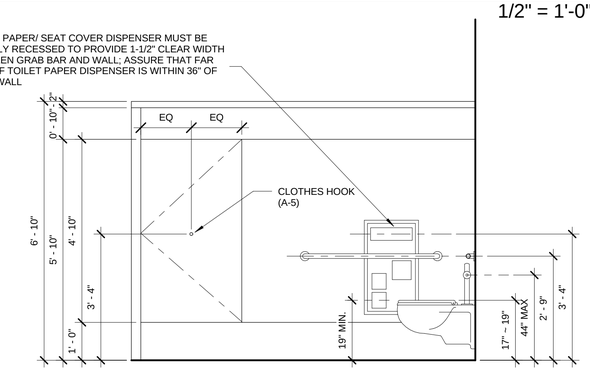

ADA - TOILET PARTITION ELEVATIONS (1)
1/2" = 1'-0"

5/2/2013 3:08:09 PM

SAN FRANCISCO OAKLAND BAY BRIDGE
EAST SPAN SEISMIC SAFETY PROJECT

Quincy Wong
DESIGN OVERSIGHT
03/27/13
SIGN OFF DATE

	BY	CHECKED
DESIGN	COREY SCHURR	GREGORY BAKER
DETAILS	BY	CHECKED
QUANTITIES	BY	CHECKED

PREPARED FOR THE
STATE OF CALIFORNIA
DEPARTMENT OF TRANSPORTATION

KAREN Y. WANG
PROJECT ENGINEER

BRIDGE NO
POST MILES 2.0

IERBYS TEMPORARY IMPROVEMENTS - BUILDING
ADA GUIDELINES

SHEET G002

DESIGN DETAIL SHEET (ENGLISH) (REV. 03/14/12)

ORIGINAL SCALE IN INCHES FOR REDUCED PLANS 0 1 2 3

UNIT: 04
PROJECT NUMBER AND PHASE:
CONTRACT NO.: 0120F4

DISREGARD PRINTS BEARING EARLIER REVISION DATES

REVISION DATES				SHEET	OF
				03	66

C:\Users\cschurr\Documents\56185_Gateway Park - Central_cschurr.rvt

DIST	COUNTY	ROUTE	POST MILES TOTAL PROJECT	SHEET No	TOTAL SHEETS
04	ALA	80	2.0	1204i	1204

REGISTERED ARCHITECT — DATE 03/27/13

PLANS APPROVAL DATE

LICENSED ARCHITECT — GREGORY P. BAKER — C-16884 — 10.31.2013 RENEWAL DATE — STATE OF CALIFORNIA

The state of California or its officers or agents shall not be responsible for the accuracy or completeness of scanned copies of this plan sheet.

HNTB CORPORATION
1111 BROADWAY
9TH FLOOR
OAKLAND, CA 94607

HNTB Corporation
Engineers Architects Planners

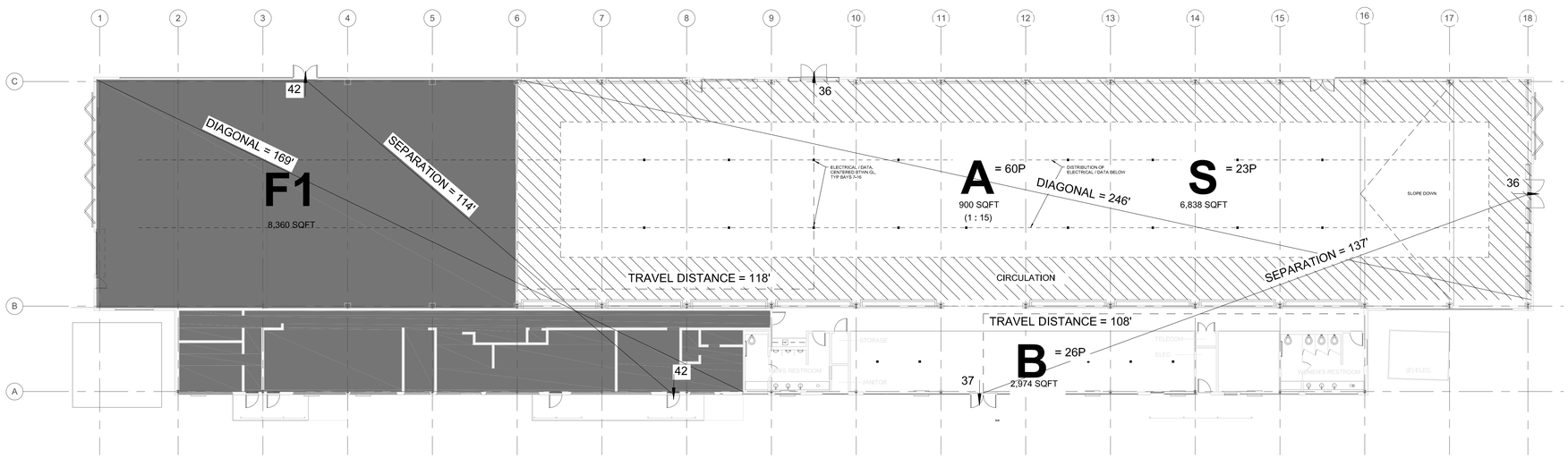

CODE:

TYPE III B, A-2 / 1-3 AND F-1 1 STORY BUILDING.
SPRINKLERS PROVIDED THROUGHOUT BUILDING.

NON-SEPARATED USE APPROACH PER CBC 508.3:
BASIC ALLOWABLE AREA = 9500 SQFT.
INCREASE FOR SPRINKLERS OF I's = 3: 28,500. 9,500 + 28,500 = 38,000 SQFT ALLOWABLE.

ACTUAL = 12,640 SQFT + 2,974 SQFT = 15,614 SQFT.

THEREFORE OCCUPANCY SEPARATIONS NOT REQUIRED PER CBC 508.3.3.

MAX TRAVEL DISTANCE = 250 FT

MIN. EXIT SEPARATION = 1/3 DIAGONAL

RENOVATED AREA:

TYPE S: 23 OCCUPANTS
6,838 SQFT @ 1 : 300

TYPE B: 26 OCCUPANTS
2,574 SQFT @ 1 : 100

TYPE A: 60 OCCUPANTS
900 SQFT @ 1 : 15

UNRENOVATED AREA:

TYPE F1: 84 OCCUPANTS
8,360 SQFT @ 1 : 100

TOTAL: 193 OCCUPANTS

EXIT WIDTH:

REQUIRED EXIT WIDTH, RENOVATED AREA
= 109 OCCUPANTS x .2"
= 21.8" REQUIRED

PROVIDED EXIT WIDTH, RENOVATED AREA
= 72" x 3
= 216" PROVIDED

NOTES:

EXIT DOORS ARE REQUIRED TO SWING OUTWARD PER CODE
PANIC HARDWARE IS REQUIRED ON ALL EXIT DOORS

05/03/13 PERMIT SET

N

3/27/2013 8:48:24 PM

SAN FRANCISCO OAKLAND BAY BRIDGE
EAST SPAN SEISMIC SAFETY PROJECT

IERBYS TEMPORARY IMPROVEMENTS - BUILDING

CODE / LIFE SAFETY

SHEET G003

Quincy Wong
DESIGN OVERSIGHT
03/27/13
SIGN OFF DATE

	BY	CHECKED
DESIGN	COREY SCHURR	GREGORY BAKER
DETAILS		
QUANTITIES		

PREPARED FOR THE
STATE OF CALIFORNIA
DEPARTMENT OF TRANSPORTATION

KAREN Y. WANG
PROJECT ENGINEER

BRIDGE NO
POST MILES 2.0

DESIGN DETAIL SHEET (ENGLISH) (REV. 03/14/12)

ORIGINAL SCALE IN INCHES FOR REDUCED PLANS 0 1 2 3

UNIT: 04
PROJECT NUMBER AND PHASE:
CONTRACT NO.: 0120F4

DISREGARD PRINTS BEARING EARLIER REVISION DATES

REVISION DATES

SHEET 04 OF 79

C:\Users\cschurr\Documents\56185_Gateway Park - Central_cschurr.rvt

DIST	COUNTY	ROUTE	POST MILES TOTAL PROJECT	SHEET No	TOTAL SHEETS
04	ALA	80	2.0	1204j	1204

REGISTERED ARCHITECT 03/27/13 DATE

03/27/13
PLANS APPROVAL DATE

LICENSED ARCHITECT
GREGORY P. BAKER
C-16884
10.31.2013
RENEWAL DATE
STATE OF CALIFORNIA

The state of California or its officers or agents shall not be responsible for the accuracy or completeness of scanned copies of this plan sheet.

HNTB CORPORATION
1111 BROADWAY
9TH FLOOR
OAKLAND, CA 94607

HNTB Corporation
Engineers Architects Planners

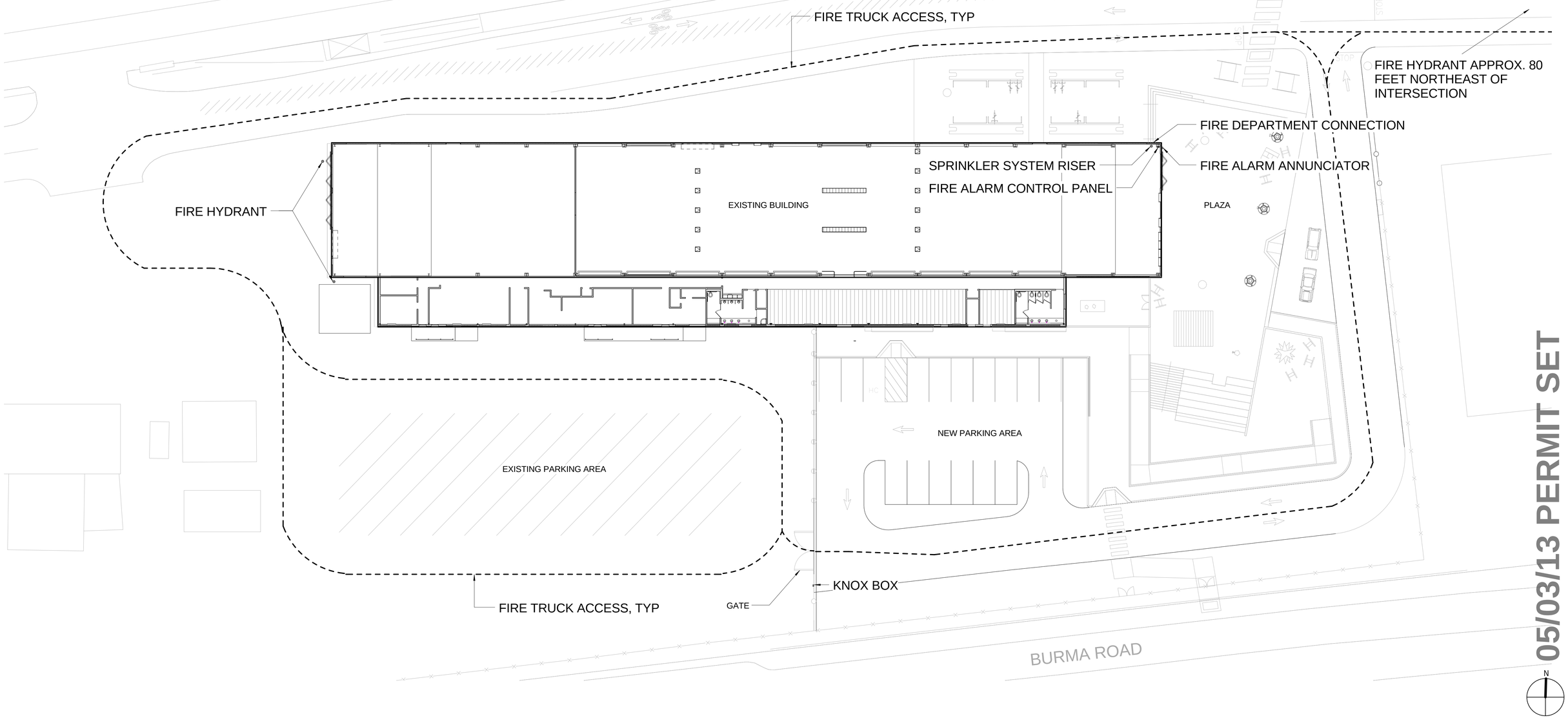

SITE PLAN
1" = 20'-0" (1)

05/03/13 PERMIT SET

5/2/2013 3:08:15 PM

SAN FRANCISCO OAKLAND BAY BRIDGE
EAST SPAN SEISMIC SAFETY PROJECT

IERBYS TEMPORARY IMPROVEMENTS - BUILDING

FIRE DEPARTMENT ACCESS

SHEET G004

Quincy Wong
DESIGN OVERSIGHT
03/27/13
SIGN OFF DATE

	BY	CHECKED
DESIGN	COREY SCHURR	GREGORY BAKER
DETAILS	BY	CHECKED
QUANTITIES	BY	CHECKED

PREPARED FOR THE
STATE OF CALIFORNIA
DEPARTMENT OF TRANSPORTATION

KAREN Y. WANG
PROJECT ENGINEER

BRIDGE NO
POST MILES 2.0

DESIGN DETAIL SHEET (ENGLISH) (REV. 03/14/12)

ORIGINAL SCALE IN INCHES FOR REDUCED PLANS 0 1 2 3

UNIT: 04
PROJECT NUMBER AND PHASE:
CONTRACT NO.: 0120F4

DISREGARD PRINTS BEARING EARLIER REVISION DATES

REVISION DATES ___ ___ ___ ___

SHEET 05 OF 66

C:\Users\cschurr\Documents\56185_Gateway Park - Central_cschurr.rvt

DIST	COUNTY	ROUTE	POST MILES TOTAL PROJECT	SHEET No	TOTAL SHEETS
04	ALA	80	2.0	1204k	1204

REGISTERED ARCHITECT — DATE 03/27/13

PLANS APPROVAL DATE 03/27/13

LICENSED ARCHITECT — GREGORY P. BAKER — C-16884 — 10.31.2013 RENEWAL DATE — STATE OF CALIFORNIA

The state of California or its officers or agents shall not be responsible for the accuracy or completeness of scanned copies of this plan sheet.

HNTB CORPORATION
1111 BROADWAY
9TH FLOOR
OAKLAND, CA 94607

HNTB Corporation Engineers Architects Planners

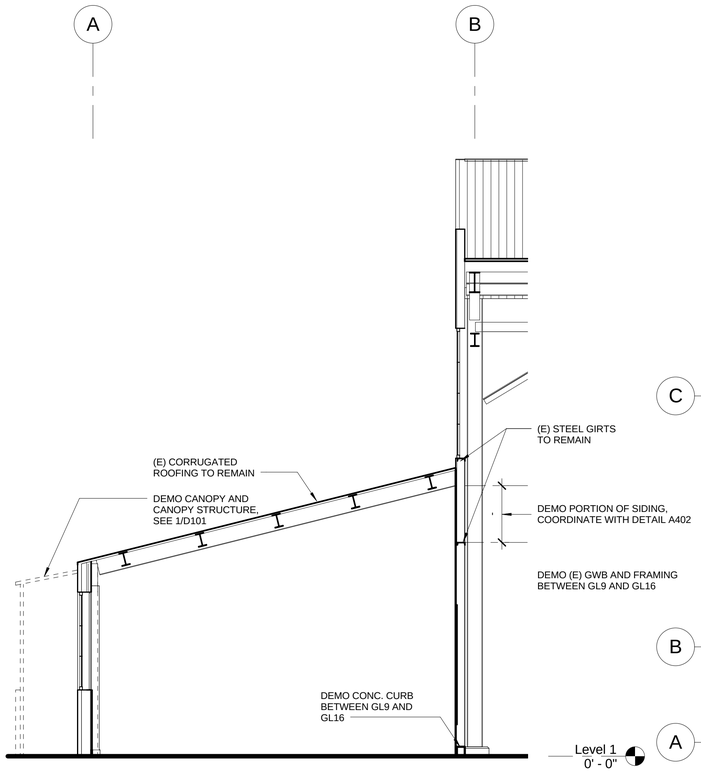

DEMO SECTION, TYP GL 9-16 (2)
1/4" = 1'-0"

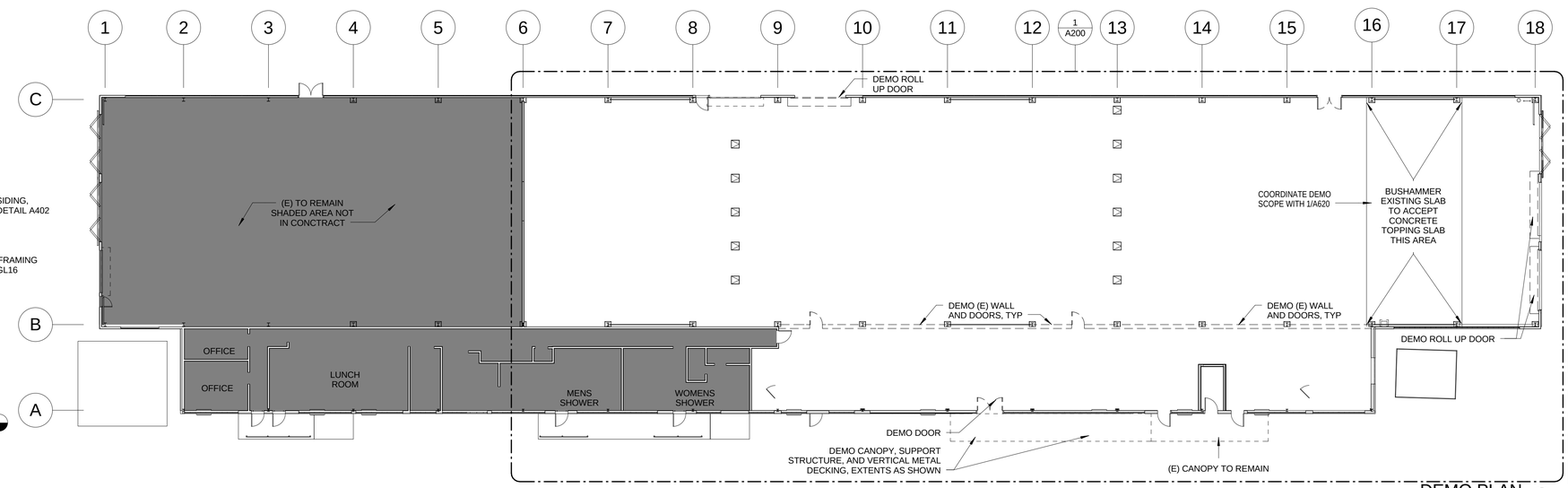

DEMO PLAN (1)
1/16" = 1'-0"

GENERAL NOTES:

1. DEMO FLUORESCENT LIGHTS
2. EXISITING CEILING HUNG HEATERS TO BE DEMOLISHED. CAP EXISTING VENTS, TYP
3. ALL ITEMS TO REMAIN, U.N.O.

05/03/13 PERMIT SET

N

5/2/2013 3:07:43 PM

SAN FRANCISCO OAKLAND BAY BRIDGE
EAST SPAN SEISMIC SAFETY PROJECT

IERBYS TEMPORARY IMPROVEMENTS - BUILDING

DEMO FLOOR PLAN

SHEET D101

Quincy Wong
DESIGN OVERSIGHT
03/27/13
SIGN OFF DATE

	BY	CHECKED
DESIGN	COREY SCHURR	GREGORY BAKER
DETAILS		
QUANTITIES		

PREPARED FOR THE STATE OF CALIFORNIA DEPARTMENT OF TRANSPORTATION

KAREN Y. WANG
PROJECT ENGINEER

BRIDGE NO
POST MILES 2.0

DESIGN DETAIL SHEET (ENGLISH) (REV. 03/14/12)

ORIGINAL SCALE IN INCHES FOR REDUCED PLANS 0 1 2 3

UNIT: 04
PROJECT NUMBER AND PHASE: CONTRACT NO.: 0120F4

DISREGARD PRINTS BEARING EARLIER REVISION DATES

REVISION DATES

SHEET 06 OF 66

C:\Users\cschurr\Documents\56185_Gateway Park - Central_cschurr.rvt

DIST	COUNTY	ROUTE	POST MILES TOTAL PROJECT	SHEET No	TOTAL SHEETS
04	ALA	80	2.0	1204I	1204

REGISTERED ARCHITECT — DATE 03/27/13

PLANS APPROVAL DATE 03/27/13

LICENSED ARCHITECT — GREGORY P. BAKER — C-16884 — 10.31.2013 RENEWAL DATE — STATE OF CALIFORNIA

The state of California or its officers or agents shall not be responsible for the accuracy or completeness of scanned copies of this plan sheet.

HNTB CORPORATION
1111 BROADWAY
9TH FLOOR
OAKLAND, CA 94607

HNTB Corporation Engineers Architects Planners

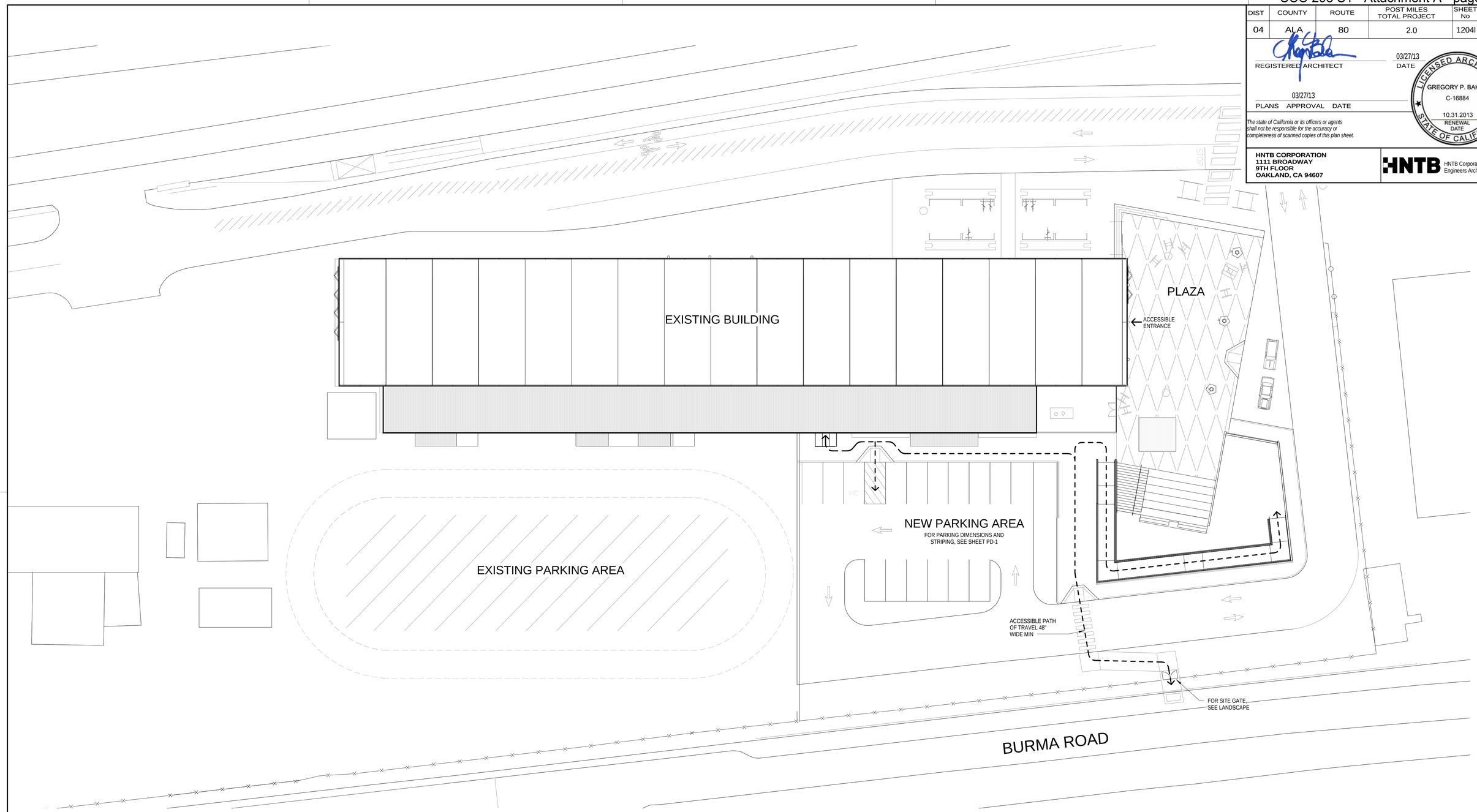

SITE PLAN (1)
1" = 20'-0"

05/03/13 PERMIT SET

5/2/2013 4:34:59 PM

SAN FRANCISCO OAKLAND BAY BRIDGE EAST SPAN SEISMIC SAFETY PROJECT

IERBYS TEMPORARY IMPROVEMENTS - BUILDING

SITE PLAN

SHEET A100

Quincy Wong
DESIGN OVERSIGHT

03/27/13
SIGN OFF DATE

	BY	CHECKED
DESIGN	COREY SCHURR	GREGORY BAKER
DETAILS	BY	CHECKED
QUANTITIES	BY	CHECKED

PREPARED FOR THE STATE OF CALIFORNIA DEPARTMENT OF TRANSPORTATION

KAREN Y. WANG
PROJECT ENGINEER

BRIDGE NO

POST MILES 2.0

DESIGN DETAIL SHEET (ENGLISH) (REV. 03/14/12)

ORIGINAL SCALE IN INCHES FOR REDUCED PLANS 0 1 2 3

UNIT: 04
PROJECT NUMBER AND PHASE: CONTRACT NO.: 0120F4

DISREGARD PRINTS BEARING EARLIER REVISION DATES

REVISION DATES ___ ___ ___ ___

SHEET 07 OF 66

C:\Users\cschurr\Documents\56185_Gateway Park - Central_cschurr.rvt

DIST	COUNTY	ROUTE	POST MILES TOTAL PROJECT	SHEET No	TOTAL SHEETS
04	ALA	80	2.0	1204m	1204

REGISTERED ARCHITECT 03/27/13 DATE

LICENSED ARCHITECT GREGORY P. BAKER C-16884 10.31.2013 RENEWAL DATE STATE OF CALIFORNIA

03/27/13
PLANS APPROVAL DATE

The state of California or its officers or agents shall not be responsible for the accuracy or completeness of scanned copies of this plan sheet.

HNTB CORPORATION
1111 BROADWAY
9TH FLOOR
OAKLAND, CA 94607

HNTB Corporation
Engineers Architects Planners

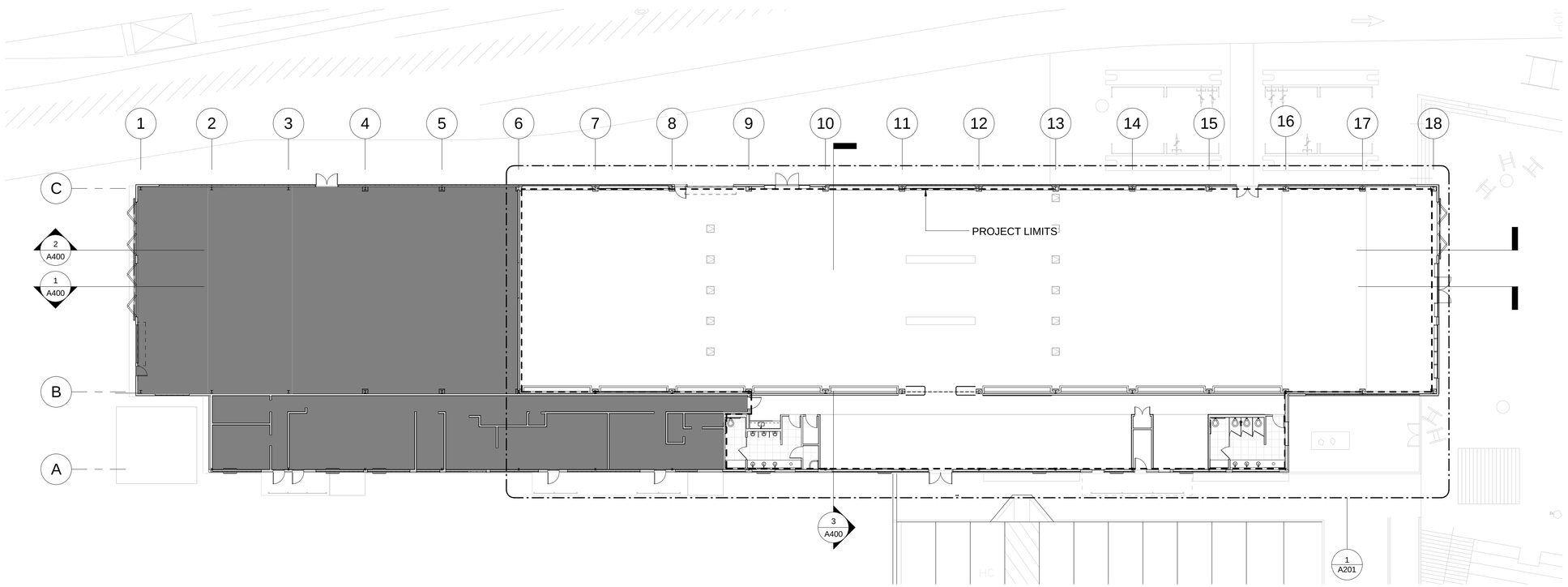

OVERALL FLOOR PLAN (1)
1/16" = 1'-0"

05/03/13 PERMIT SET

N

5/2/2013 3:02:03 PM

SAN FRANCISCO OAKLAND BAY BRIDGE
EAST SPAN SEISMIC SAFETY PROJECT

IERBYS TEMPORARY IMPROVEMENTS - BUILDING

FLOOR PLAN

SHEET A101

Quincy Wong
DESIGN OVERSIGHT

03/27/13
SIGN OFF DATE

	BY	CHECKED
DESIGN	COREY SCHURR	GREGORY BAKER
DETAILS	BY	CHECKED
QUANTITIES	BY	CHECKED

PREPARED FOR THE
STATE OF CALIFORNIA
DEPARTMENT OF TRANSPORTATION

KAREN Y. WANG
PROJECT ENGINEER

BRIDGE NO

POST MILES 2.0

DESIGN DETAIL SHEET (ENGLISH) (REV. 03/14/12)

ORIGINAL SCALE IN INCHES FOR REDUCED PLANS 0 1 2 3

UNIT: 04
PROJECT NUMBER AND PHASE: CONTRACT NO.: 0120F4

DISREGARD PRINTS BEARING EARLIER REVISION DATES

REVISION DATES ___ ___ ___ ___

SHEET 08 OF 66

C:\Users\cschurr\Documents\56185_Gateway Park - Central_cschurr.rvt

DIST	COUNTY	ROUTE	POST MILES TOTAL PROJECT	SHEET No	TOTAL SHEETS
04	ALA	80	2.0	1204n	1204

REGISTERED ARCHITECT — DATE 03/27/13

PLANS APPROVAL DATE 03/27/13

LICENSED ARCHITECT — GREGORY P. BAKER — C-16884 — 10.31.2013 RENEWAL DATE — STATE OF CALIFORNIA

The state of California or its officers or agents shall not be responsible for the accuracy or completeness of scanned copies of this plan sheet.

HNTB CORPORATION
1111 BROADWAY
9TH FLOOR
OAKLAND, CA 94607

HNTB Corporation
Engineers Architects Planners

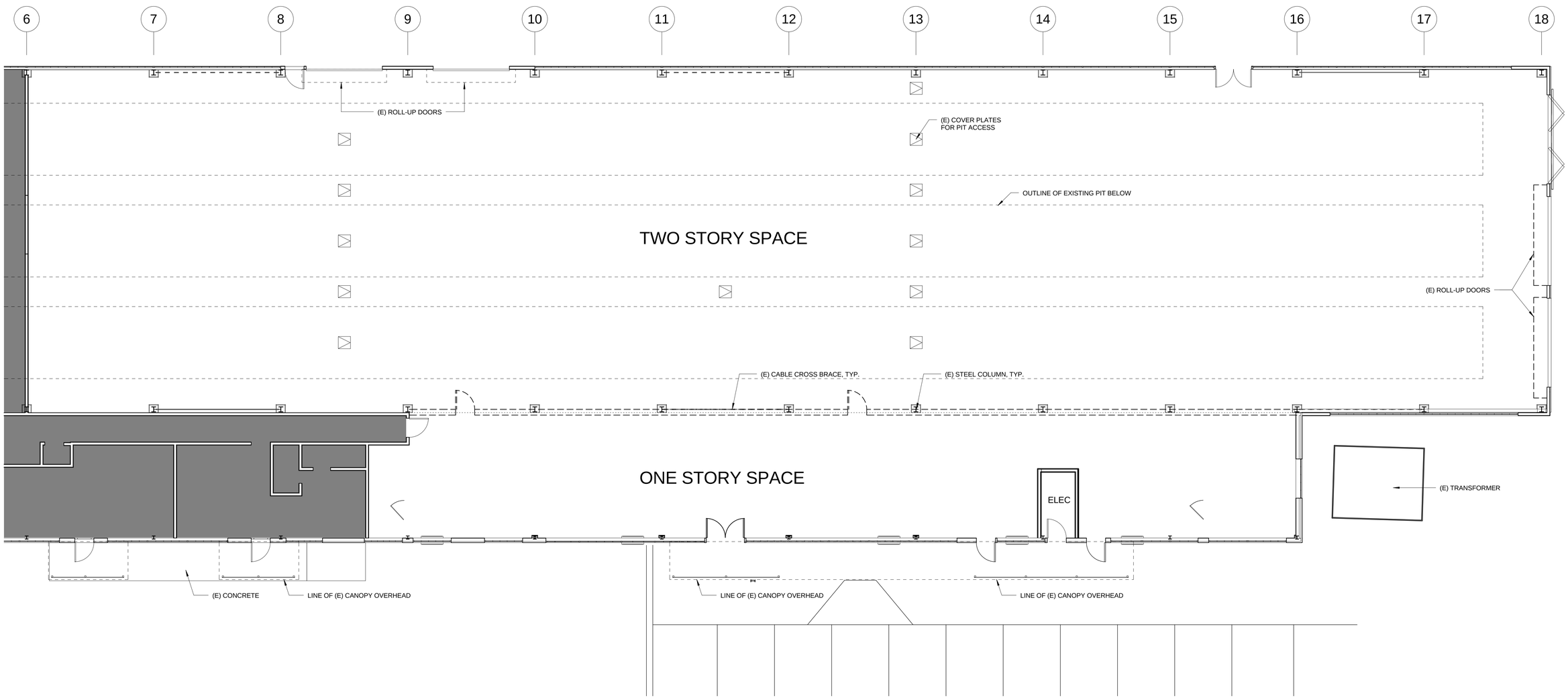

EXISTING FLOOR PLAN (1)
1/8" = 1'-0"

N

05/03/13 PERMIT SET

5/2/2013 5:08:51 PM

SAN FRANCISCO OAKLAND BAY BRIDGE
EAST SPAN SEISMIC SAFETY PROJECT

IERBYS TEMPORARY IMPROVEMENTS - BUILDING

EXISTING FLOOR PLAN

SHEET A200

Quincy Wong
DESIGN OVERSIGHT

03/27/13
SIGN OFF DATE

	BY	CHECKED
DESIGN	COREY SCHURR	GREGORY BAKER
DETAILS	BY	CHECKED
QUANTITIES	BY	CHECKED

PREPARED FOR THE
STATE OF CALIFORNIA
DEPARTMENT OF TRANSPORTATION

KAREN Y. WANG
PROJECT ENGINEER

BRIDGE NO

POST MILES 2.0

DESIGN DETAIL SHEET (ENGLISH) (REV. 03/14/12)

ORIGINAL SCALE IN INCHES FOR REDUCED PLANS 0 1 2 3

UNIT: 04
PROJECT NUMBER AND PHASE:
CONTRACT NO.: 0120F4

DISREGARD PRINTS BEARING EARLIER REVISION DATES

REVISION DATES ___ ___ ___ ___

SHEET 09 OF 66

C:\Users\cschurr\Documents\56185_Gateway Park - Central_cschurr.rvt

DIST	COUNTY	ROUTE	POST MILES TOTAL PROJECT	SHEET No	TOTAL SHEETS
04	ALA	80	2.0	1204o	1204

REGISTERED ARCHITECT — DATE 03/27/13

PLANS APPROVAL DATE 03/27/13

LICENSED ARCHITECT — GREGORY P. BAKER — C-16884 — 10.31.2013 RENEWAL DATE — STATE OF CALIFORNIA

The state of California or its officers or agents shall not be responsible for the accuracy or completeness of scanned copies of this plan sheet.

HNTB CORPORATION
1111 BROADWAY
9TH FLOOR
OAKLAND, CA 94607

HNTB Corporation
Engineers Architects Planners

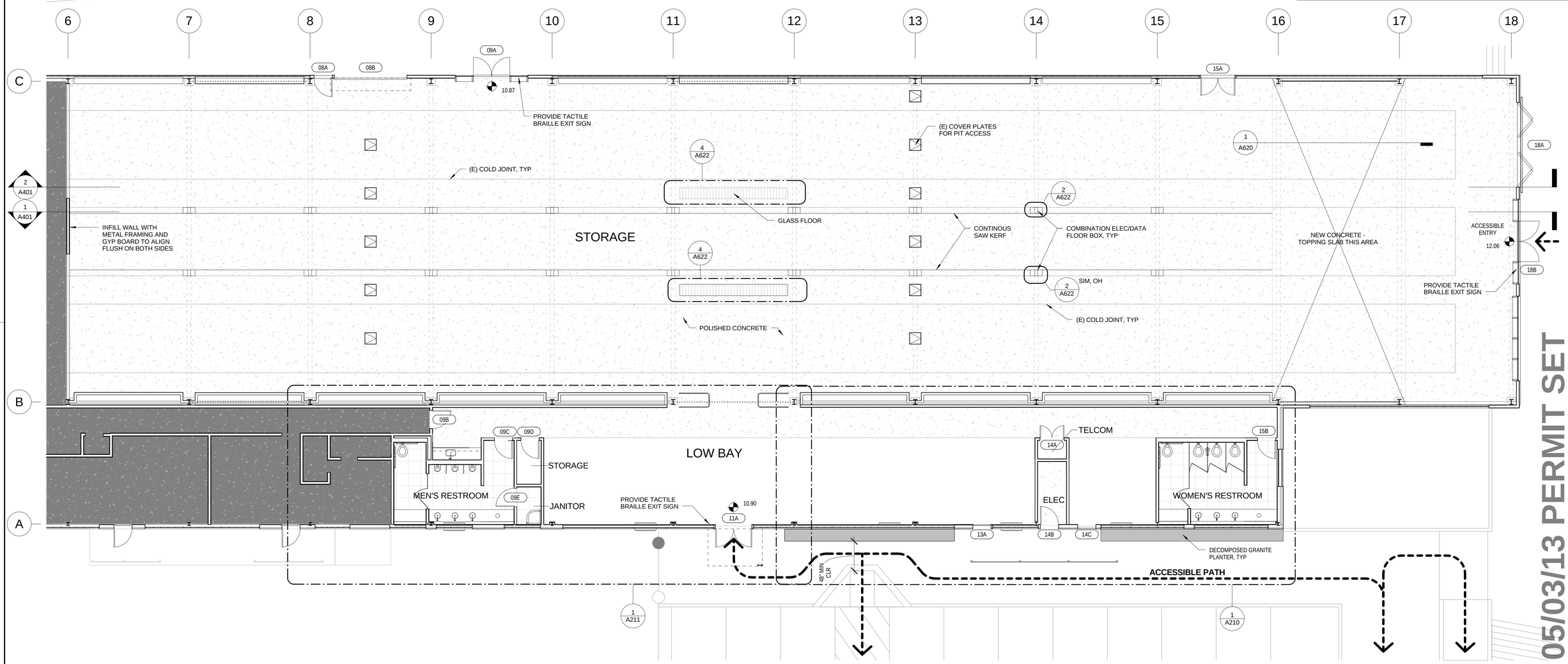

05/03/13 PERMIT SET

ENLARGED FLOOR PLAN (1)
1/8" = 1'-0"

5/2/2013 5:13:59 PM

SAN FRANCISCO OAKLAND BAY BRIDGE EAST SPAN SEISMIC SAFETY PROJECT

IERBYS TEMPORARY IMPROVEMENTS - BUILDING

ENLARGED FLOOR PLAN

SHEET A201

Quincy Wong
DESIGN OVERSIGHT

03/27/13
SIGN OFF DATE

	BY	CHECKED
DESIGN	COREY SCHURR	GREGORY BAKER
DETAILS	BY	CHECKED
QUANTITIES	BY	CHECKED

PREPARED FOR THE STATE OF CALIFORNIA DEPARTMENT OF TRANSPORTATION

KAREN Y. WANG
PROJECT ENGINEER

BRIDGE NO
POST MILES 2.0

DESIGN DETAIL SHEET (ENGLISH) (REV. 03/14/12)

ORIGINAL SCALE IN INCHES FOR REDUCED PLANS 0 1 2 3

UNIT: 04
PROJECT NUMBER AND PHASE:
CONTRACT NO.: 0120F4

DISREGARD PRINTS BEARING EARLIER REVISION DATES

REVISION DATES

SHEET 10 OF 66

C:\Users\cschurr\Documents\56185_Gateway Park - Central_cschurr.rvt

DIST	COUNTY	ROUTE	POST MILES TOTAL PROJECT	SHEET No	TOTAL SHEETS
04	ALA	80	2.0	1204p	1204

REGISTERED ARCHITECT 03/27/13 DATE

LICENSED ARCHITECT GREGORY P. BAKER C-16884 10.31.2013 RENEWAL DATE STATE OF CALIFORNIA

03/27/13
PLANS APPROVAL DATE

The state of California or its officers or agents shall not be responsible for the accuracy or completeness of scanned copies of this plan sheet.

HNTB CORPORATION
1111 BROADWAY
9TH FLOOR
OAKLAND, CA 94607

HNTB Corporation Engineers Architects Planners

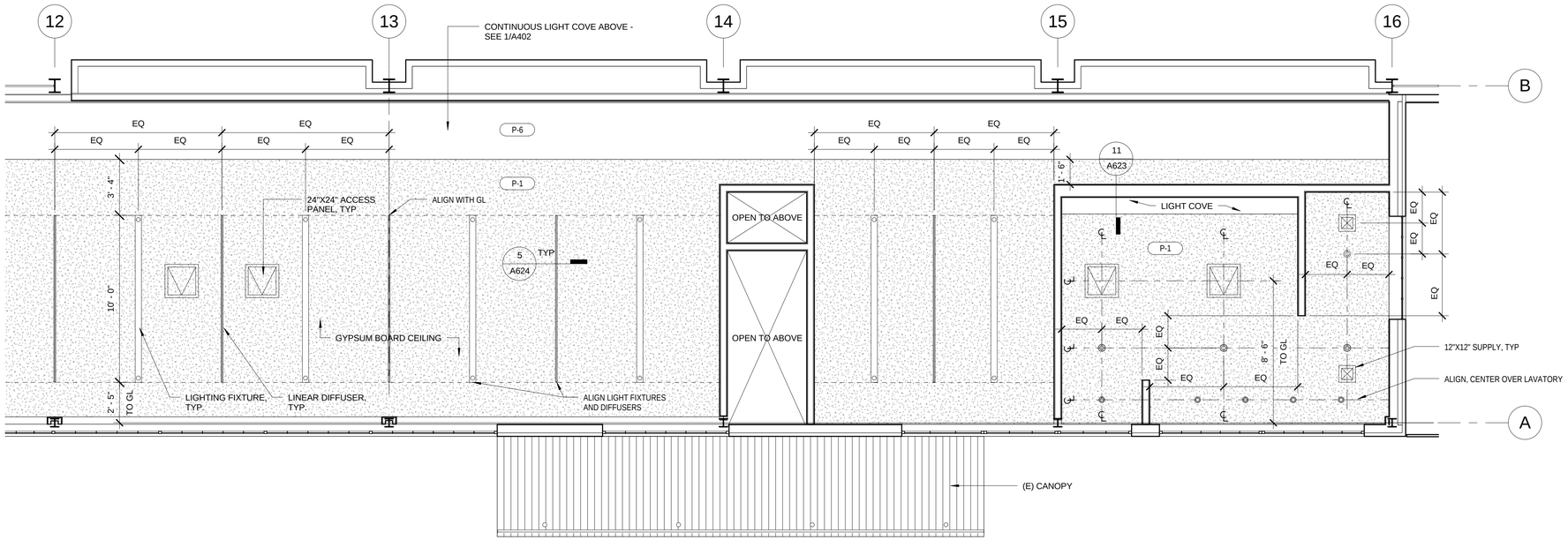

LOW BAY EAST - RCP (2)
1/4" = 1'-0"

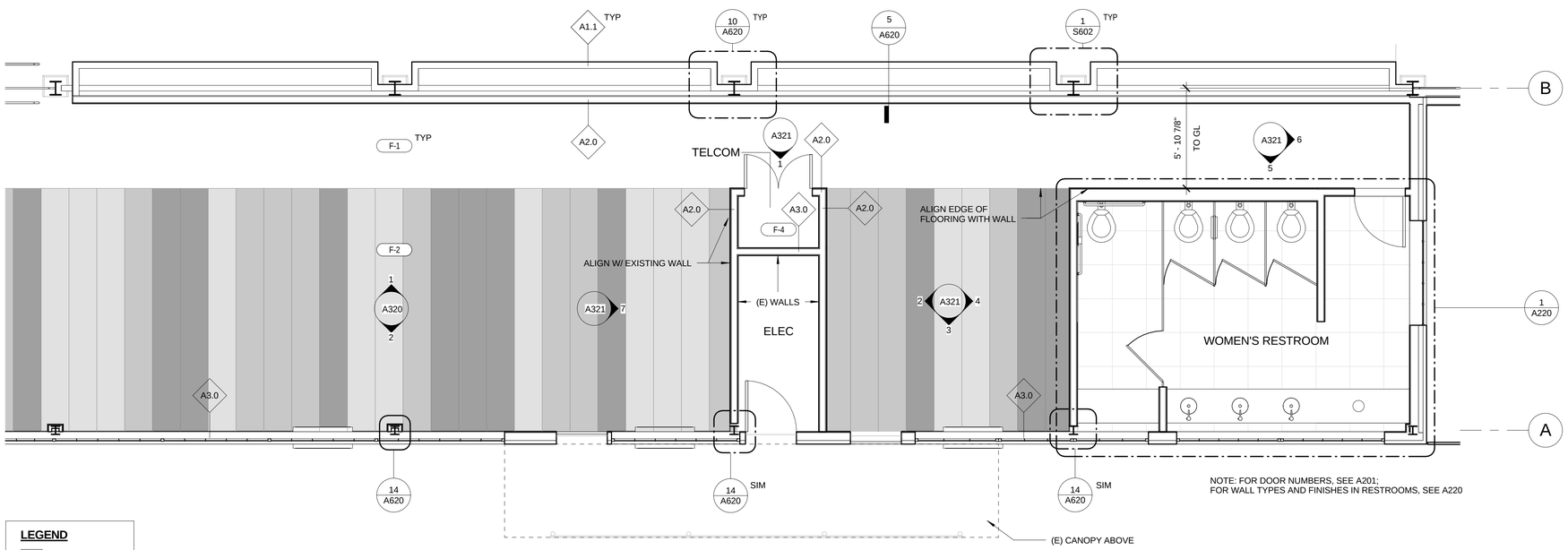

LOW BAY EAST (1)
1/4" = 1'-0"

LEGEND

- COLOR 1
- COLOR 2
- COLOR 3

*FOR FINISHES, SEE A600

05/03/13 PERMIT SET

N

5/2/2013 5:16:09 PM

SAN FRANCISCO OAKLAND BAY BRIDGE EAST SPAN SEISMIC SAFETY PROJECT

Quincy Wong
DESIGN OVERSIGHT
03/27/13
SIGN OFF DATE

	BY	CHECKED
DESIGN	COREY SCHURR	GREGORY BAKER
DETAILS	BY	CHECKED
QUANTITIES	BY	CHECKED

PREPARED FOR THE
STATE OF CALIFORNIA
DEPARTMENT OF TRANSPORTATION

KAREN Y. WANG
PROJECT ENGINEER

BRIDGE NO
POST MILES 2.0

IERBYS TEMPORARY IMPROVEMENTS - BUILDING

ENLARGED FLOOR PLAN - LOW BAY

SHEET A210

DESIGN DETAIL SHEET (ENGLISH) (REV. 03/14/12)

ORIGINAL SCALE IN INCHES FOR REDUCED PLANS 0 1 2 3

UNIT: 04
PROJECT NUMBER AND PHASE: CONTRACT NO.: 0120F4

DISREGARD PRINTS BEARING EARLIER REVISION DATES

REVISION DATES ___ ___ ___ ___

SHEET 11 OF 66

C:\Users\cschurr\Documents\56185_Gateway Park - Central_cschurr.rvt

DIST	COUNTY	ROUTE	POST MILES TOTAL PROJECT	SHEET No	TOTAL SHEETS
04	ALA	80	2.0	1204q	1204

REGISTERED ARCHITECT 03/27/13 DATE

LICENSED ARCHITECT GREGORY P. BAKER C-16884 10.31.2013 RENEWAL DATE STATE OF CALIFORNIA

03/27/13
PLANS APPROVAL DATE

The state of California or its officers or agents shall not be responsible for the accuracy or completeness of scanned copies of this plan sheet.

HNTB CORPORATION
1111 BROADWAY
9TH FLOOR
OAKLAND, CA 94607

HNTB Corporation Engineers Architects Planners

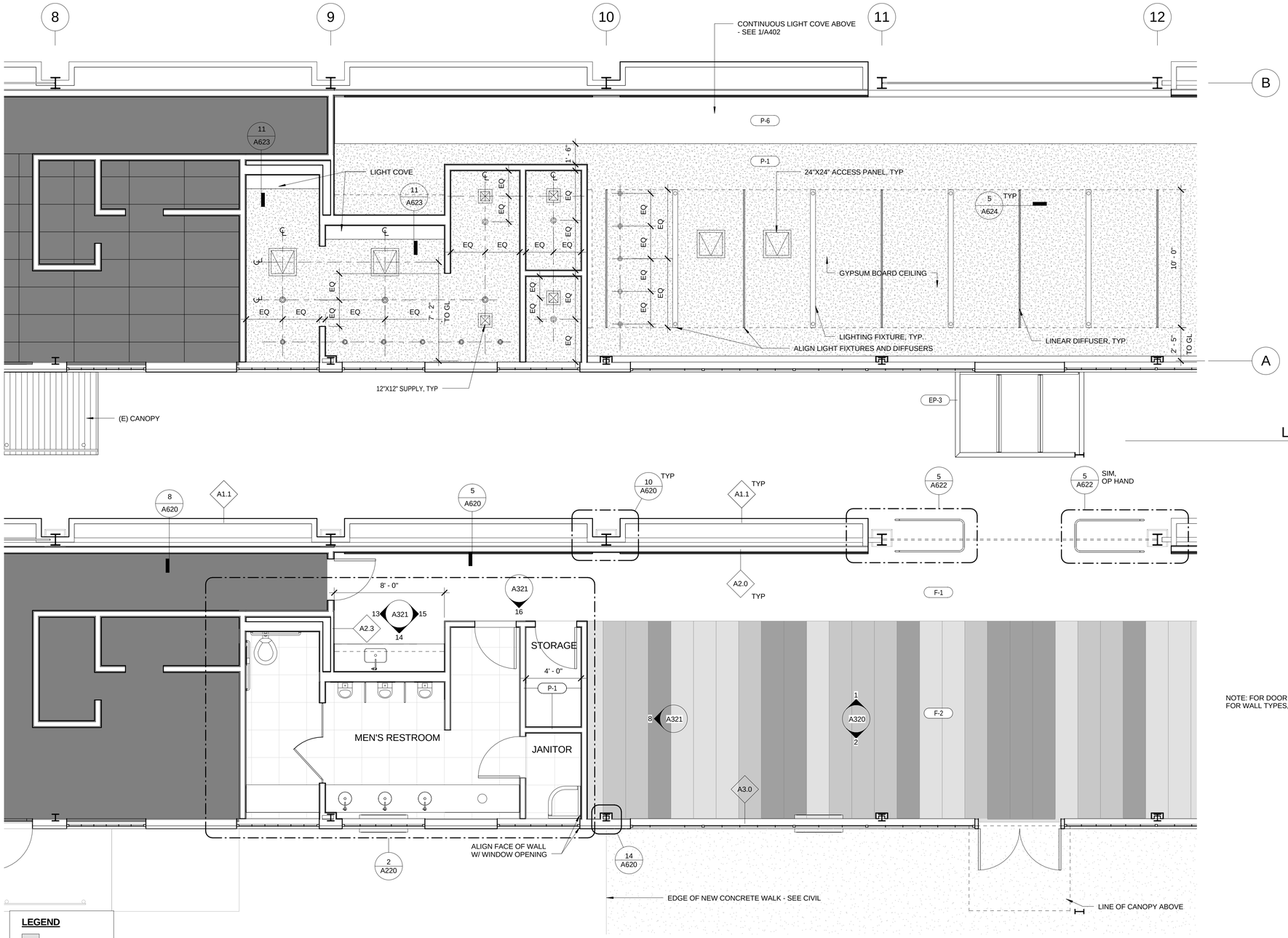

LOW BAY WEST - RCP (2)
1/4" = 1'-0"

NOTE: FOR DOOR NUMBERS, SEE A201
FOR WALL TYPES, SEE A601

LOW BAY WEST (1)
1/4" = 1'-0"

LEGEND

- COLOR 1
- COLOR 2
- COLOR 3

*FOR FINISHES, SEE A600

05/03/13 PERMIT SET

N

5/2/2013 3:02:48 PM

SAN FRANCISCO OAKLAND BAY BRIDGE EAST SPAN SEISMIC SAFETY PROJECT

Quincy Wong
DESIGN OVERSIGHT

03/27/13
SIGN OFF DATE

	BY	CHECKED
DESIGN	COREY SCHURR	GREGORY BAKER
DETAILS	BY	CHECKED
QUANTITIES	BY	CHECKED

PREPARED FOR THE
STATE OF CALIFORNIA
DEPARTMENT OF TRANSPORTATION

KAREN Y. WANG
PROJECT ENGINEER

BRIDGE NO

POST MILES
2.0

IERBYS TEMPORARY IMPROVEMENTS - BUILDING

ENLARGED FLOOR PLAN - LOW BAY

SHEET
A211

DESIGN DETAIL SHEET (ENGLISH) (REV. 03/14/12)

ORIGINAL SCALE IN INCHES FOR REDUCED PLANS 0 1 2 3

UNIT: 04
PROJECT NUMBER AND PHASE:
CONTRACT NO.: 0120F4

DISREGARD PRINTS BEARING EARLIER REVISION DATES

REVISION DATES				SHEET	OF
				12	66

C:\Users\cschurr\Documents\56185_Gateway Park - Central_cschurr.rvt

DIST	COUNTY	ROUTE	POST MILES TOTAL PROJECT	SHEET No	TOTAL SHEETS
04	ALA	80	2.0	1204r	1204

REGISTERED ARCHITECT — DATE 03/27/13

PLANS APPROVAL DATE 03/27/13

LICENSED ARCHITECT — GREGORY P. BAKER — C-16884 — 10.31.2013 RENEWAL DATE — STATE OF CALIFORNIA

The state of California or its officers or agents shall not be responsible for the accuracy or completeness of scanned copies of this plan sheet.

HNTB CORPORATION
1111 BROADWAY
9TH FLOOR
OAKLAND, CA 94607

HNTB Corporation
Engineers Architects Planners

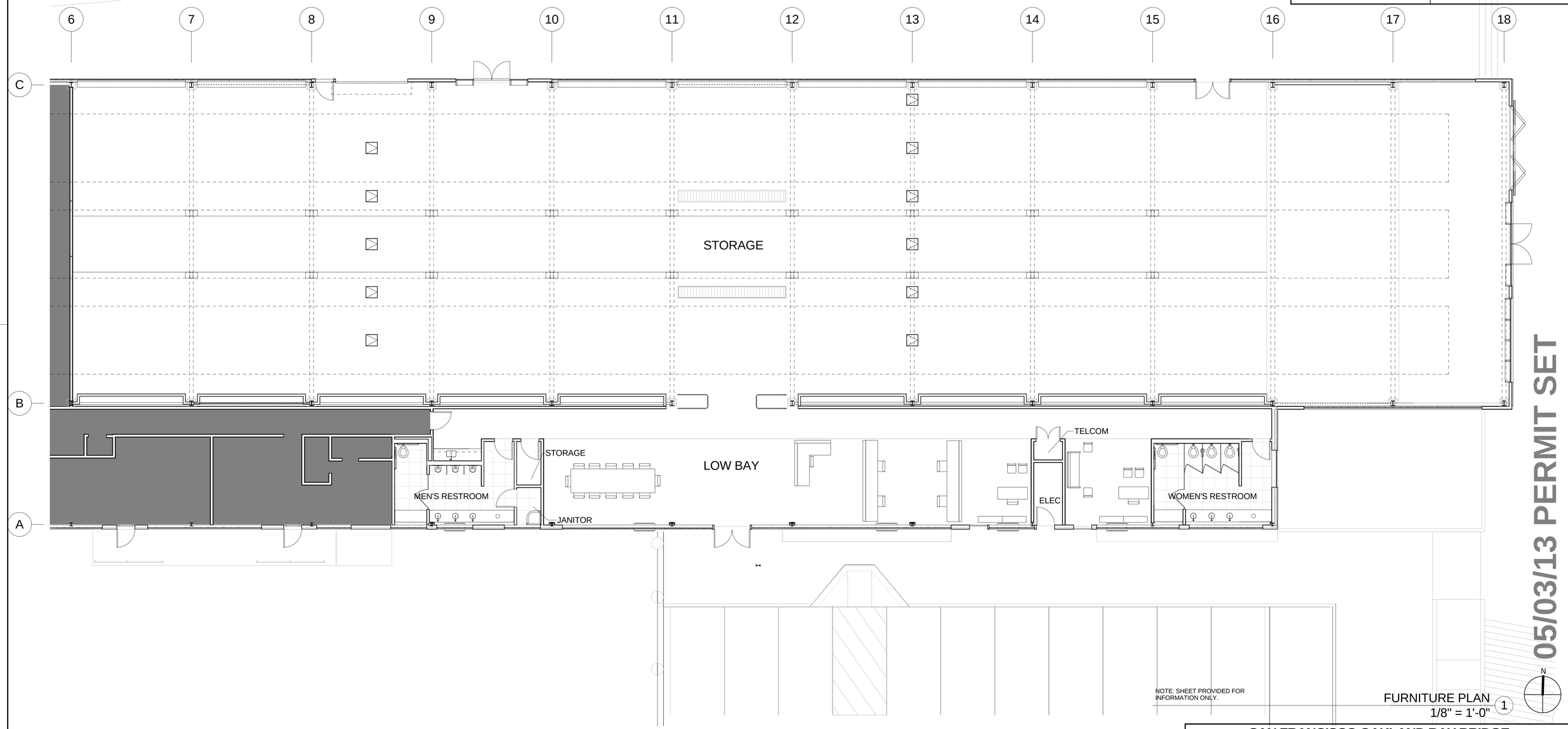

NOTE: SHEET PROVIDED FOR INFORMATION ONLY.

FURNITURE PLAN (1)
1/8" = 1'-0"

05/03/13 PERMIT SET

5/2/2013 3:02:54 PM

SAN FRANCISCO OAKLAND BAY BRIDGE
EAST SPAN SEISMIC SAFETY PROJECT

IERBYS TEMPORARY IMPROVEMENTS - BUILDING

FURNITURE PLAN

SHEET A212

Quincy Wong
DESIGN OVERSIGHT

03/27/13
SIGN OFF DATE

	BY	CHECKED
DESIGN	COREY SCHURR	GREGORY BAKER
DETAILS		
QUANTITIES		

PREPARED FOR THE
STATE OF CALIFORNIA
DEPARTMENT OF TRANSPORTATION

KAREN Y. WANG
PROJECT ENGINEER

BRIDGE NO

POST MILES 2.0

DESIGN DETAIL SHEET (ENGLISH) (REV. 03/14/12)

ORIGINAL SCALE IN INCHES FOR REDUCED PLANS 0 1 2 3

UNIT: 04
PROJECT NUMBER AND PHASE:
CONTRACT NO.: 0120F4

DISREGARD PRINTS BEARING EARLIER REVISION DATES

REVISION DATES ___ ___ ___ ___

SHEET 13 OF 66

C:\Users\cschurr\Documents\56185_Gateway Park - Central_cschurr.rvt

DIST	COUNTY	ROUTE	POST MILES TOTAL PROJECT	SHEET No	TOTAL SHEETS
04	ALA	80	2.0	1204s	1204

REGISTERED ARCHITECT 03/27/13 DATE

03/27/13
PLANS APPROVAL DATE

LICENSED ARCHITECT
GREGORY P. BAKER
C-16884
10.31.2013
RENEWAL DATE
STATE OF CALIFORNIA

The state of California or its officers or agents shall not be responsible for the accuracy or completeness of scanned copies of this plan sheet.

HNTB CORPORATION
1111 BROADWAY
9TH FLOOR
OAKLAND, CA 94607

HNTB Corporation
Engineers Architects Planners

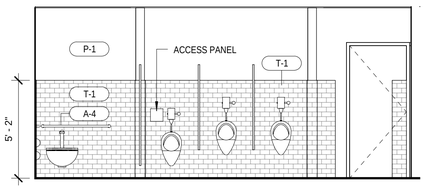

MEN'S - NORTH (10)
1/4" = 1'-0"

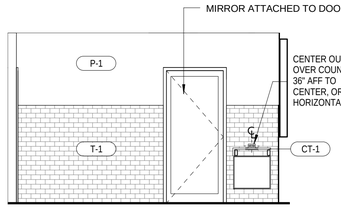

MEN'S - EAST (9)
1/4" = 1'-0"

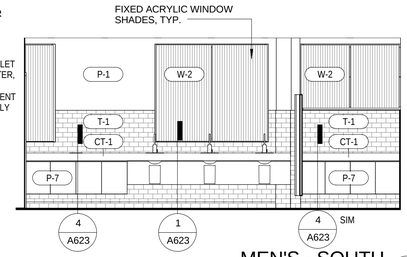

MEN'S - SOUTH (8)
1/4" = 1'-0"

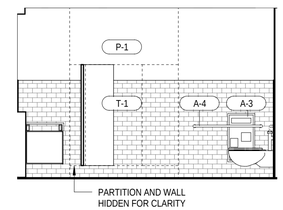

MEN'S - WEST (7)
1/4" = 1'-0"

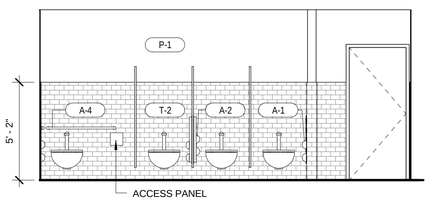

WOMEN'S - NORTH (6)
1/4" = 1'-0"

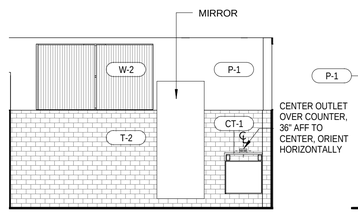

WOMEN'S - EAST (5)
1/4" = 1'-0"

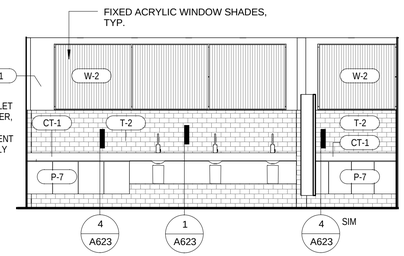

WOMEN'S - SOUTH (4)
1/4" = 1'-0"

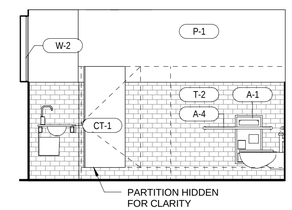

WOMEN'S - WEST (3)
1/4" = 1'-0"

A321
16

FOR ADDITIONAL ACCESSIBILITY NOTES AND DIMENSIONS, SEE G002

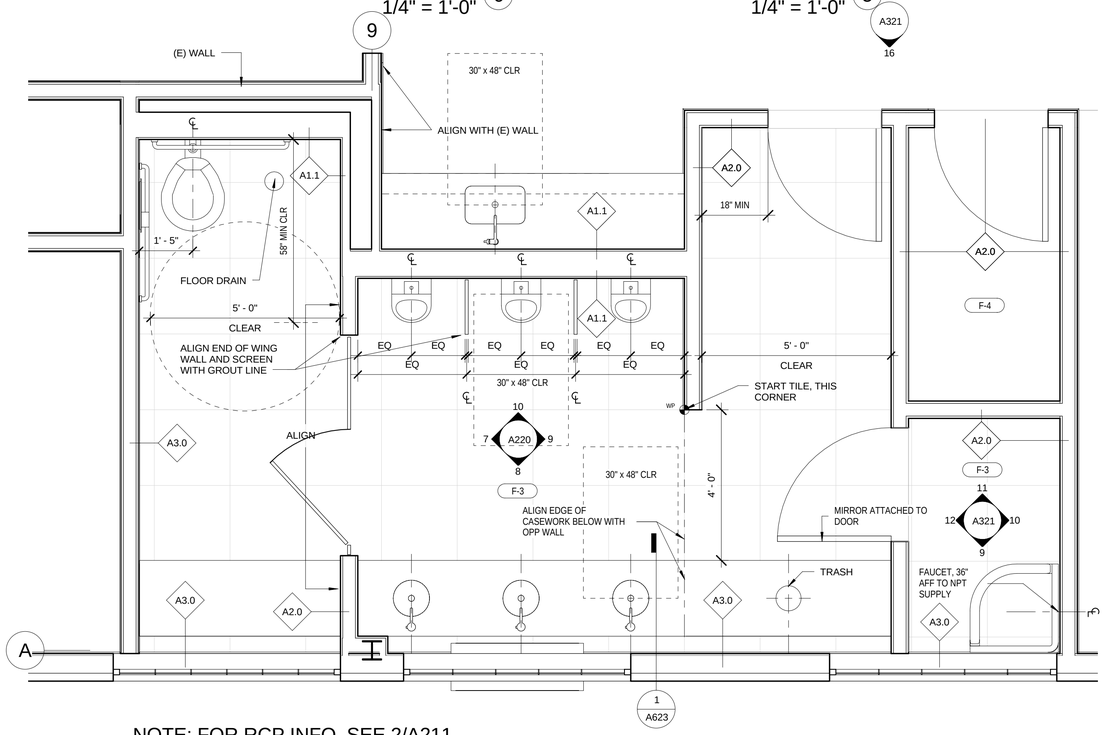

NOTE: FOR RCP INFO, SEE 2/A211

MEN'S RESTROOM (2)
1/2" = 1'-0"

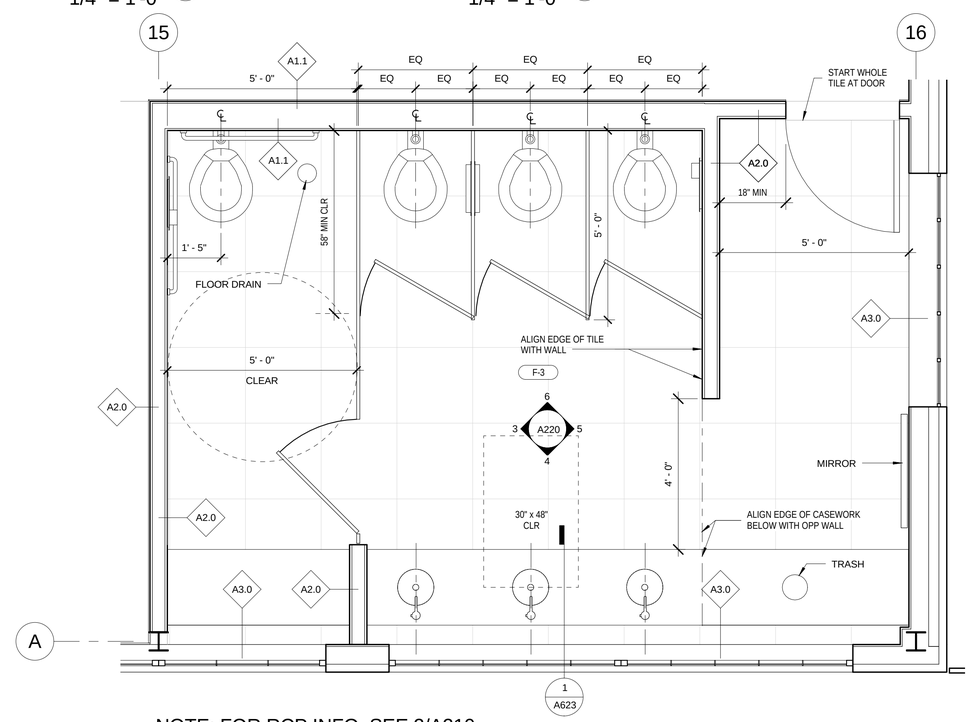

NOTE: FOR RCP INFO, SEE 2/A210

WOMEN'S RESTROOM (1)
1/2" = 1'-0"

05/03/13 PERMIT SET

5/2/2013 5:17:58 PM

SAN FRANCISCO OAKLAND BAY BRIDGE EAST SPAN SEISMIC SAFETY PROJECT

Quincy Wong
DESIGN OVERSIGHT

03/27/13
SIGN OFF DATE

DESIGN DETAIL SHEET (ENGLISH) (REV. 03/14/12)

	BY	CHECKED
DESIGN	COREY SCHURR	GREGORY BAKER
DETAILS	BY	CHECKED
QUANTITIES	BY	CHECKED

ORIGINAL SCALE IN INCHES FOR REDUCED PLANS 0 1 2 3

PREPARED FOR THE
STATE OF CALIFORNIA
DEPARTMENT OF TRANSPORTATION

KAREN Y. WANG
PROJECT ENGINEER

BRIDGE NO
POST MILES 2.0

IERBYS TEMPORARY IMPROVEMENTS - BUILDING

RESTROOM PLANS AND ELEVATIONS

SHEET A220

UNIT: 04
PROJECT NUMBER AND PHASE:
CONTRACT NO.: 0120F4

DISREGARD PRINTS BEARING EARLIER REVISION DATES

REVISION DATES

SHEET 14 OF 66

C:\Users\cschurr\Documents\56185_Gateway Park - Central_cschurr.rvt

DIST	COUNTY	ROUTE	POST MILES TOTAL PROJECT	SHEET No	TOTAL SHEETS
04	ALA	80	2.0	1204t	1204

REGISTERED ARCHITECT — DATE 03/27/13

PLANS APPROVAL DATE 03/27/13

LICENSED ARCHITECT — GREGORY P. BAKER — C-16884 — 10.31.2013 RENEWAL DATE — STATE OF CALIFORNIA

The state of California or its officers or agents shall not be responsible for the accuracy or completeness of scanned copies of this plan sheet.

HNTB CORPORATION
1111 BROADWAY
9TH FLOOR
OAKLAND, CA 94607

HNTB Corporation Engineers Architects Planners

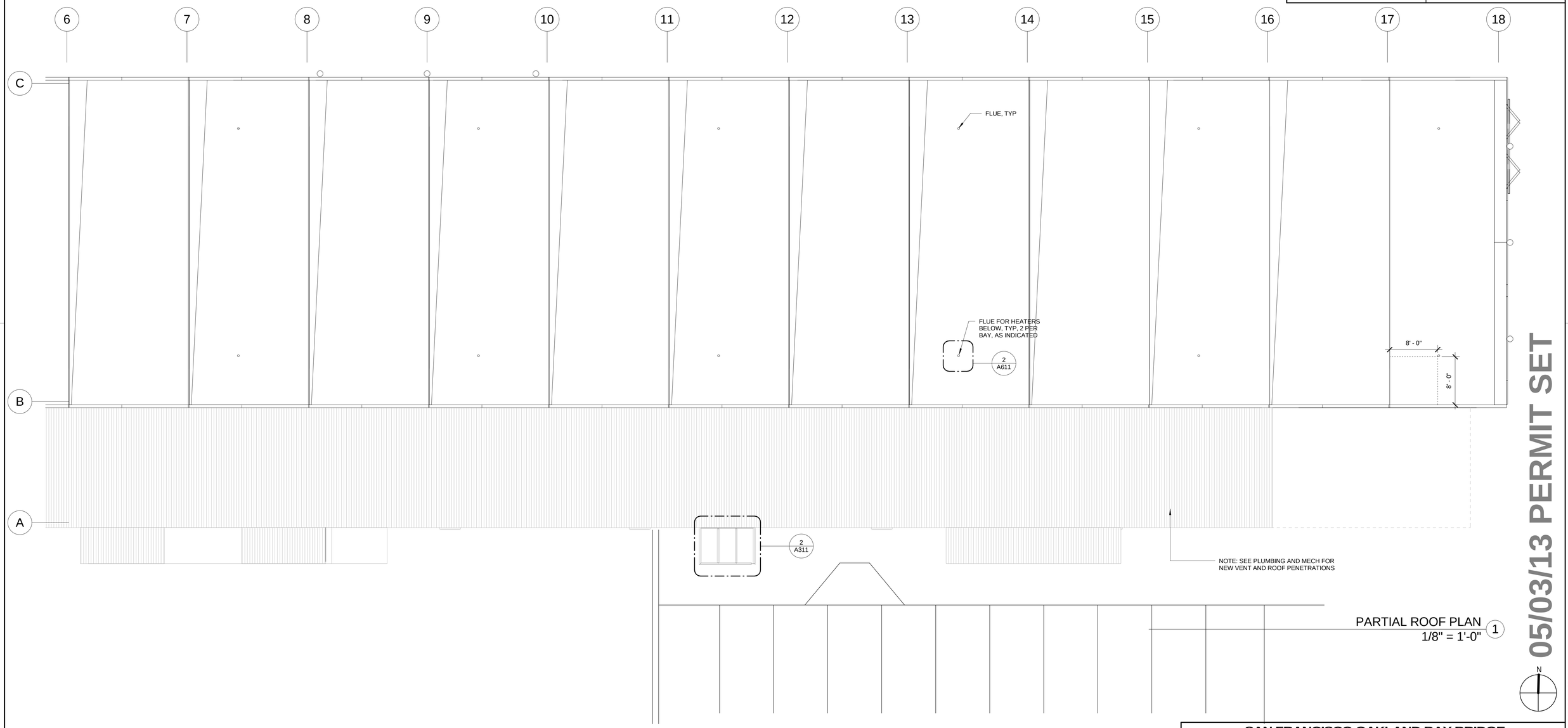

PARTIAL ROOF PLAN (1)
1/8" = 1'-0"

05/03/13 PERMIT SET

5/2/2013 3:03:09 PM

SAN FRANCISCO OAKLAND BAY BRIDGE
EAST SPAN SEISMIC SAFETY PROJECT

Quincy Wong
DESIGN OVERSIGHT
03/27/13
SIGN OFF DATE

	BY	CHECKED
DESIGN	COREY SCHURR	GREGORY BAKER
DETAILS		
QUANTITIES		

PREPARED FOR THE
STATE OF CALIFORNIA
DEPARTMENT OF TRANSPORTATION

KAREN Y. WANG
PROJECT ENGINEER

BRIDGE NO
POST MILES 2.0

IERBYS TEMPORARY IMPROVEMENTS - BUILDING
PARTIAL ROOF PLAN

SHEET A230

DESIGN DETAIL SHEET (ENGLISH) (REV. 03/14/12)

ORIGINAL SCALE IN INCHES FOR REDUCED PLANS 0 1 2 3

UNIT: 04
PROJECT NUMBER AND PHASE: CONTRACT NO.: 0120F4

DISREGARD PRINTS BEARING EARLIER REVISION DATES

REVISION DATES ___ ___ ___ ___

SHEET 15 OF 66

C:\Users\cschurr\Documents\56185_Gateway Park - Central_cschurr.rvt

DIST	COUNTY	ROUTE	POST MILES TOTAL PROJECT	SHEET No	TOTAL SHEETS
04	ALA	80	2.0	1204u	1204

REGISTERED ARCHITECT — DATE 03/27/13

PLANS APPROVAL DATE 03/27/13

LICENSED ARCHITECT — GREGORY P. BAKER — C-16884 — 10.31.2013 RENEWAL DATE — STATE OF CALIFORNIA

The state of California or its officers or agents shall not be responsible for the accuracy or completeness of scanned copies of this plan sheet.

HNTB CORPORATION
1111 BROADWAY
9TH FLOOR
OAKLAND, CA 94607

HNTB Corporation
Engineers Architects Planners

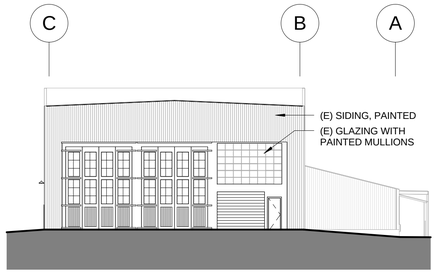

WEST ELEVATION 4
1/16" = 1'-0"

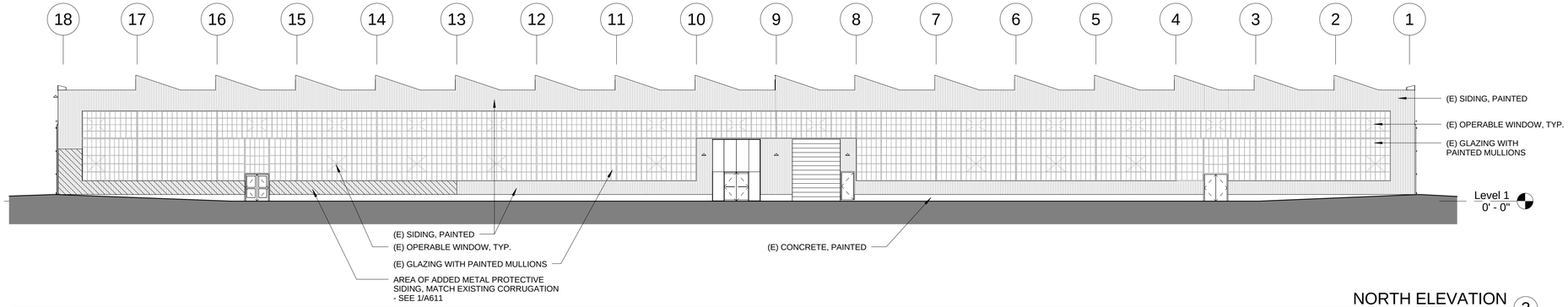

NORTH ELEVATION 3
1/16" = 1'-0"

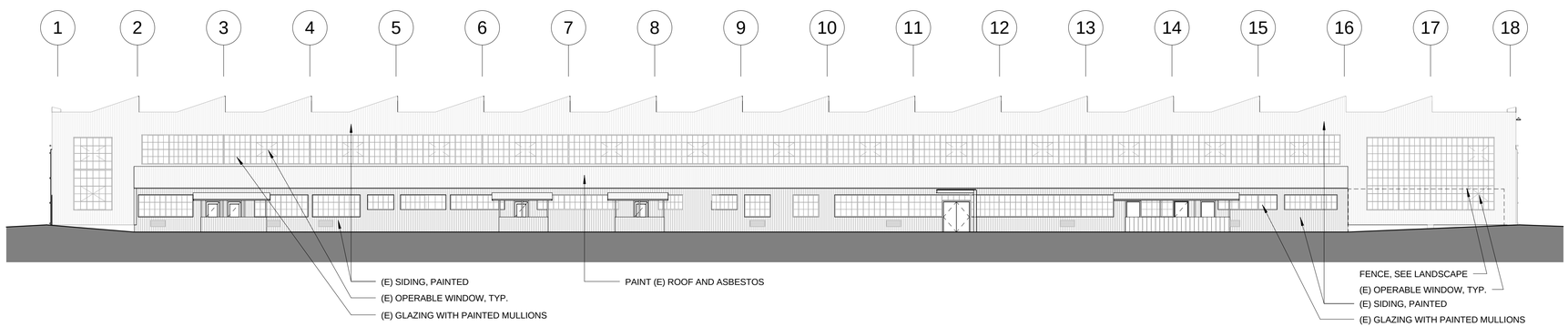

SOUTH ELEVATION 2
1/16" = 1'-0"

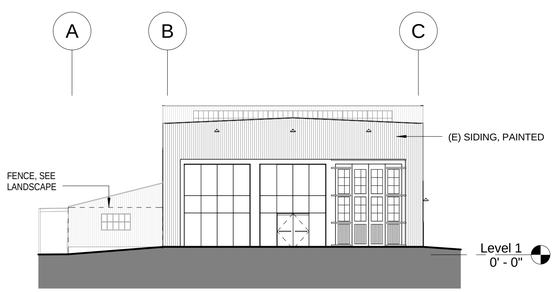

EAST ELEVATION 1
1/16" = 1'-0"

NOTES:
FOR NOTES ON MATERIALS AND FINISHES, SEE 1/8"
ENLARGED ELEVATIONS

SCOPE OF EXTERIOR PAINTING TO INCLUDE:
- ALL CORRUGATED SIDING, INCLUDING VERTICAL, SLOPED, AND SIDING AT ROOF AREAS (EP-1, UON)
- ALL WINDOW MULLIONS AND TRIM (M-1)
- ALL (E) LEAD FLASHING TO BE PAINTED (EP-1)
- ALL DOORS AND JAMBS, INCLUDING ROLL-UP DOORS
- ALL MISCELLANEOUS METAL AND HARDWARE

05/03/13 PERMIT SET

5/2/2013 5:29:46 PM

SAN FRANCISCO OAKLAND BAY BRIDGE
EAST SPAN SEISMIC SAFETY PROJECT

IERBYS TEMPORARY IMPROVEMENTS - BUILDING

ELEVATIONS

SHEET A300

Quincy Wong
DESIGN OVERSIGHT

03/27/13
SIGN OFF DATE

	BY	CHECKED
DESIGN	COREY SCHURR	GREGORY BAKER
DETAILS		
QUANTITIES		

PREPARED FOR THE
STATE OF CALIFORNIA
DEPARTMENT OF TRANSPORTATION

KAREN Y. WANG
PROJECT ENGINEER

BRIDGE NO
POST MILES 2.0

DESIGN DETAIL SHEET (ENGLISH) (REV. 03/14/12)

ORIGINAL SCALE IN INCHES FOR REDUCED PLANS 0 1 2 3

UNIT: 04
PROJECT NUMBER AND PHASE:
CONTRACT NO.: 0120F4

DISREGARD PRINTS BEARING EARLIER REVISION DATES

REVISION DATES

SHEET 16 OF 66

C:\Users\cschurr\Documents\56185_Gateway Park - Central_cschurr.rvt

DIST	COUNTY	ROUTE	POST MILES TOTAL PROJECT	SHEET No	TOTAL SHEETS
04	ALA	80	2.0	1204v	1204

REGISTERED ARCHITECT — DATE 03/27/13

PLANS APPROVAL DATE 03/27/13

LICENSED ARCHITECT — GREGORY P. BAKER — C-16884 — 10.31.2013 RENEWAL DATE — STATE OF CALIFORNIA

The state of California or its officers or agents shall not be responsible for the accuracy or completeness of scanned copies of this plan sheet.

HNTB CORPORATION
1111 BROADWAY
9TH FLOOR
OAKLAND, CA 94607

HNTB Corporation
Engineers Architects Planners

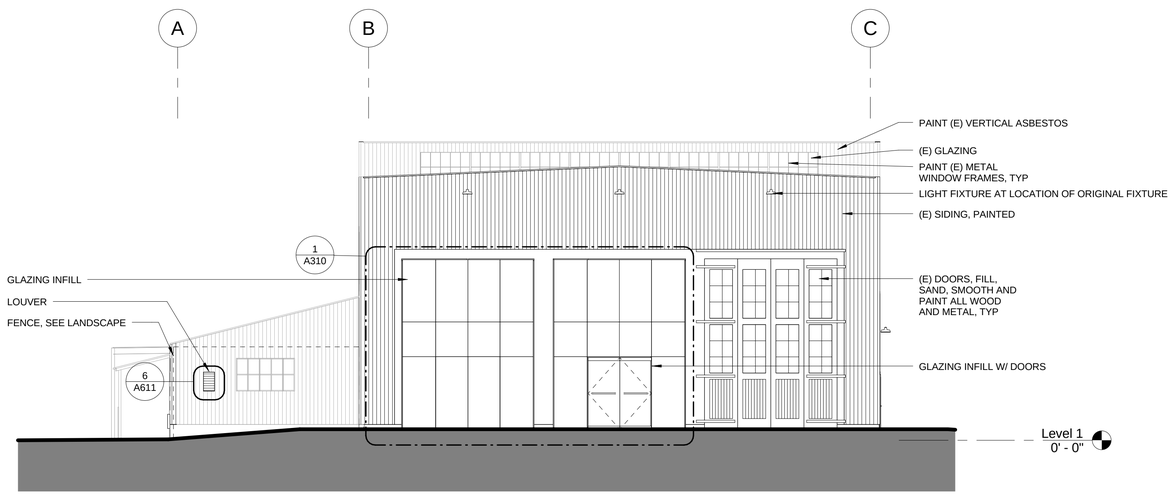

EAST ELEVATION (2)
1/8" = 1'-0"

NOTES:

SCOPE OF EXTERIOR PAINTING TO INCLUDE:
- ALL CORRUGATED SIDING, INCLUDING VERTICAL, SLOPED, AND SIDING AT ROOF AREAS (EP-1, UON)
- ALL WINDOW MULLIONS AND TRIM (M-1)
- ALL (E) LEAD FLASHING TO BE PAINTED (EP-1)
- ALL DOORS AND JAMBS, INCLUDING ROLL-UP DOORS
- ALL MISCELLANEOUS METAL AND HARDWARE

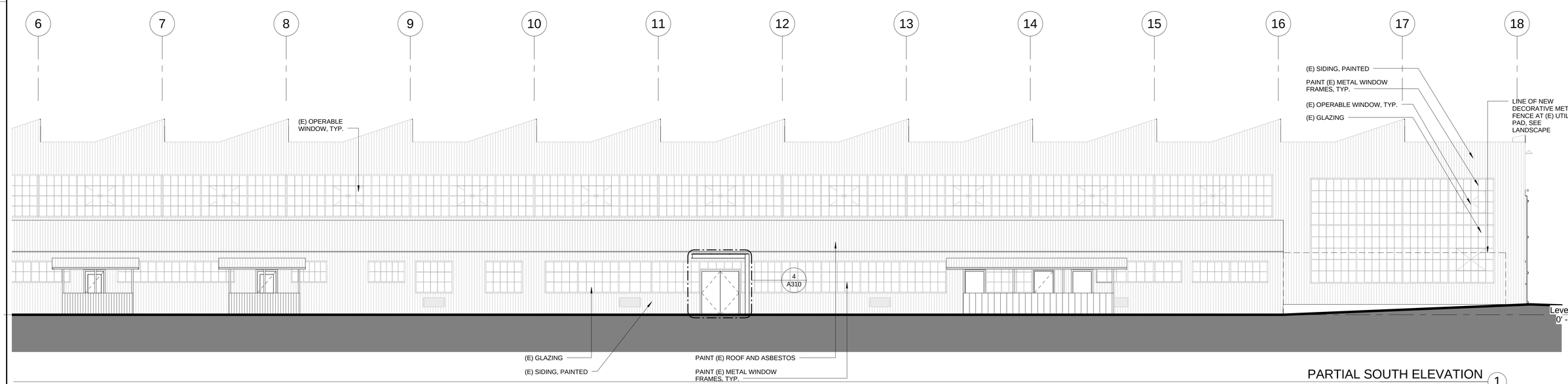

PARTIAL SOUTH ELEVATION (1)
1/8" = 1'-0"

05/03/13 PERMIT SET

5/2/2013 5:29:57 PM

Quincy Wong
DESIGN OVERSIGHT

03/27/13
SIGN OFF DATE

	BY	CHECKED
DESIGN	COREY SCHURR	GREGORY BAKER
DETAILS		
QUANTITIES		

PREPARED FOR THE
STATE OF CALIFORNIA
DEPARTMENT OF TRANSPORTATION

KAREN Y. WANG
PROJECT ENGINEER

BRIDGE NO
POST MILES 2.0

SAN FRANCISCO OAKLAND BAY BRIDGE EAST SPAN SEISMIC SAFETY PROJECT

IERBYS TEMPORARY IMPROVEMENTS - BUILDING

ENLARGED ELEVATIONS

SHEET A301

DESIGN DETAIL SHEET (ENGLISH) (REV. 03/14/12)

ORIGINAL SCALE IN INCHES FOR REDUCED PLANS 0 1 2 3

UNIT: 04
PROJECT NUMBER AND PHASE:
CONTRACT NO.: 0120F4

DISREGARD PRINTS BEARING EARLIER REVISION DATES

REVISION DATES

SHEET 17 OF 66

C:\Users\cschurr\Documents\56185_Gateway Park - Central_cschurr.rvt

DIST	COUNTY	ROUTE	POST MILES TOTAL PROJECT	SHEET No	TOTAL SHEETS
04	ALA	80	2.0	1204w	1204

REGISTERED ARCHITECT — DATE 03/27/13

PLANS APPROVAL DATE 03/27/13

LICENSED ARCHITECT — GREGORY P. BAKER — C-16884 — 10.31.2013 RENEWAL DATE — STATE OF CALIFORNIA

The state of California or its officers or agents shall not be responsible for the accuracy or completeness of scanned copies of this plan sheet.

HNTB CORPORATION
1111 BROADWAY
9TH FLOOR
OAKLAND, CA 94607

HNTB Corporation
Engineers Architects Planners

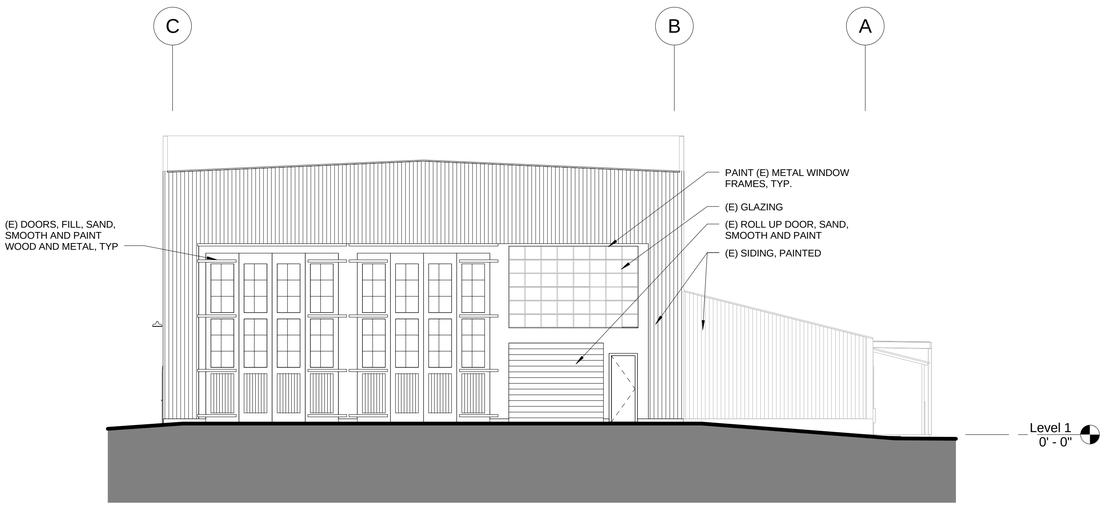

WEST ELEVATION (2)
1/8" = 1'-0"

NOTES:

SCOPE OF EXTERIOR PAINTING TO INCLUDE:
- ALL CORRUGATED SIDING, INCLUDING VERTICAL, SLOPED, AND SIDING AT ROOF AREAS (EP-1, UON)
- ALL WINDOW MULLIONS AND TRIM (M-1)
- ALL (E) LEAD FLASHING TO BE PAINTED (EP-1)
- ALL DOORS AND JAMBS, INCLUDING ROLL-UP DOORS
- ALL MISCELLANEOUS METAL AND HARDWARE

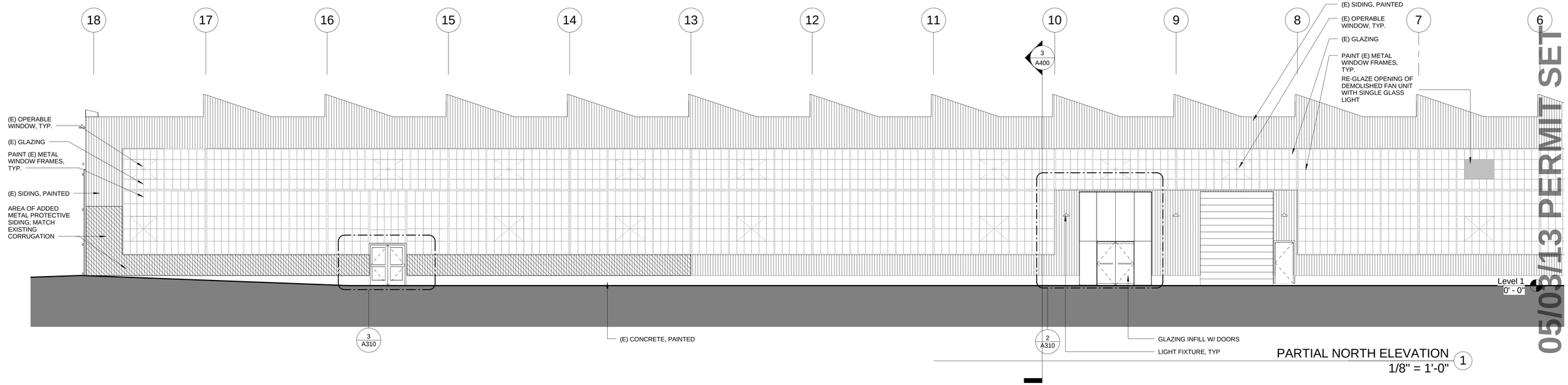

PARTIAL NORTH ELEVATION (1)
1/8" = 1'-0"

05/03/13 PERMIT SET

5/2/2013 5:30:05 PM

Quincy Wong
DESIGN OVERSIGHT

03/27/13
SIGN OFF DATE

DESIGN DETAIL SHEET (ENGLISH) (REV. 03/14/12)

	BY	CHECKED
DESIGN	COREY SCHURR	GREGORY BAKER
DETAILS	BY	CHECKED
QUANTITIES	BY	CHECKED

PREPARED FOR THE
STATE OF CALIFORNIA
DEPARTMENT OF TRANSPORTATION

KAREN Y. WANG
PROJECT ENGINEER

BRIDGE NO
POST MILES 2.0

SAN FRANCISCO OAKLAND BAY BRIDGE
EAST SPAN SEISMIC SAFETY PROJECT

IERBYS TEMPORARY IMPROVEMENTS - BUILDING

ENLARGED ELEVATIONS

SHEET A302

ORIGINAL SCALE IN INCHES FOR REDUCED PLANS 0 1 2 3

UNIT: 04
PROJECT NUMBER AND PHASE:
CONTRACT NO.: 0120F4

DISREGARD PRINTS BEARING EARLIER REVISION DATES

REVISION DATES

SHEET 18 OF 66

C:\Users\cschurr\Documents\56185_Gateway Park - Central_cschurr.rvt

DIST	COUNTY	ROUTE	POST MILES TOTAL PROJECT	SHEET No	TOTAL SHEETS
04	ALA	80	2.0	1204x	1204

REGISTERED ARCHITECT — DATE 03/27/13

PLANS APPROVAL DATE 03/27/13

LICENSED ARCHITECT — GREGORY P. BAKER — C-16884 — 10.31.2013 RENEWAL DATE — STATE OF CALIFORNIA

The state of California or its officers or agents shall not be responsible for the accuracy or completeness of scanned copies of this plan sheet.

HNTB CORPORATION
1111 BROADWAY
9TH FLOOR
OAKLAND, CA 94607

HNTB Corporation Engineers Architects Planners

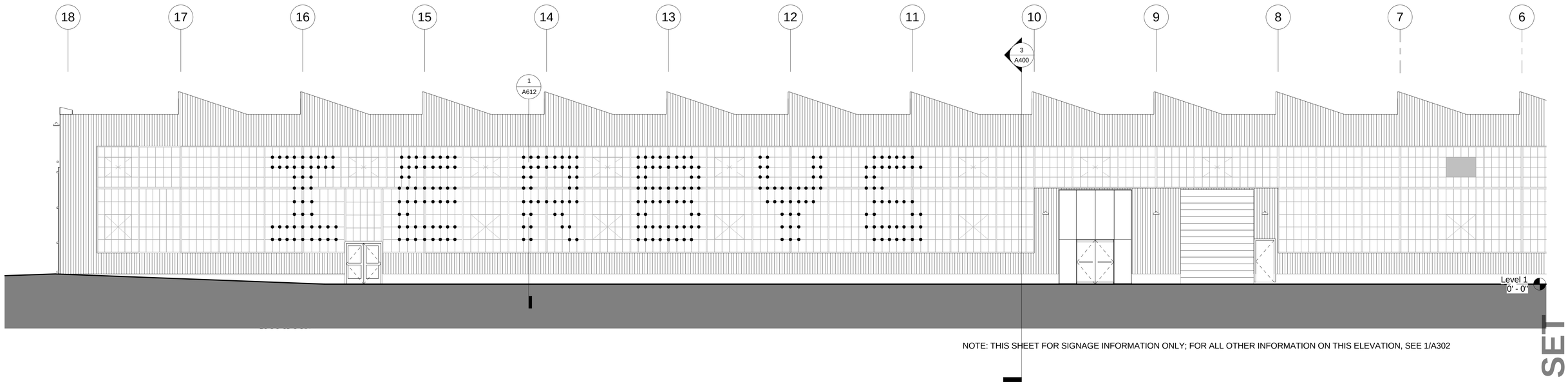

NOTE: THIS SHEET FOR SIGNAGE INFORMATION ONLY; FOR ALL OTHER INFORMATION ON THIS ELEVATION, SEE 1/A302

PARTIAL NORTH ELEVATION - SIGNAGE 1
1/8" = 1'-0"

Specifications

Wet-Location Listed

Light Sources include TokiLeds and Kinetic TokiLeds

Polycarbonate Sockets with flammability rating UL 94V-0

Flexible Conductors are plated #18 AWG

Sockets are soldered and ultrasonically bonded to cable

Insulation is flexible PVC with flammability rating UL 94 HB

FIXTURE:

3000K LED LAMPS ON VERTICAL 1/16" S.S. AIRCRAFT CABLE.

LIGHTSTRING BY TOKISTAR CUSTOM SPACING WHITE ASSOCIATES LIGHTING
323.661.9495

05/03/13 PERMIT SET

5/2/2013 3:04:01 PM

SAN FRANCISCO OAKLAND BAY BRIDGE
EAST SPAN SEISMIC SAFETY PROJECT

IERBYS TEMPORARY IMPROVEMENTS - BUILDING

ENLARGED ELEVATIONS - SIGNAGE

SHEET A303

Quincy Wong
DESIGN OVERSIGHT
03/27/13
SIGN OFF DATE

	BY	CHECKED
DESIGN	COREY SCHURR	GREGORY BAKER
DETAILS		
QUANTITIES		

PREPARED FOR THE STATE OF CALIFORNIA DEPARTMENT OF TRANSPORTATION

KAREN Y. WANG
PROJECT ENGINEER

BRIDGE NO
POST MILES 2.0

DESIGN DETAIL SHEET (ENGLISH) (REV. 03/14/12)

ORIGINAL SCALE IN INCHES FOR REDUCED PLANS 0 1 2 3

UNIT: 04
PROJECT NUMBER AND PHASE: CONTRACT NO.: 0120F4

DISREGARD PRINTS BEARING EARLIER REVISION DATES

REVISION DATES ___ ___ ___ ___

SHEET 19 OF 66

C:\Users\cschurr\Documents\56185_Gateway Park - Central_cschurr.rvt

DIST	COUNTY	ROUTE	POST MILES TOTAL PROJECT	SHEET No	TOTAL SHEETS
04	ALA	80	2.0	1204y	1204

REGISTERED ARCHITECT — DATE 03/27/13

PLANS APPROVAL DATE 03/27/13

LICENSED ARCHITECT — GREGORY P. BAKER — C-16884 — 10.31.2013 RENEWAL DATE — STATE OF CALIFORNIA

The state of California or its officers or agents shall not be responsible for the accuracy or completeness of scanned copies of this plan sheet.

HNTB CORPORATION
1111 BROADWAY
9TH FLOOR
OAKLAND, CA 94607

HNTB Corporation Engineers Architects Planners

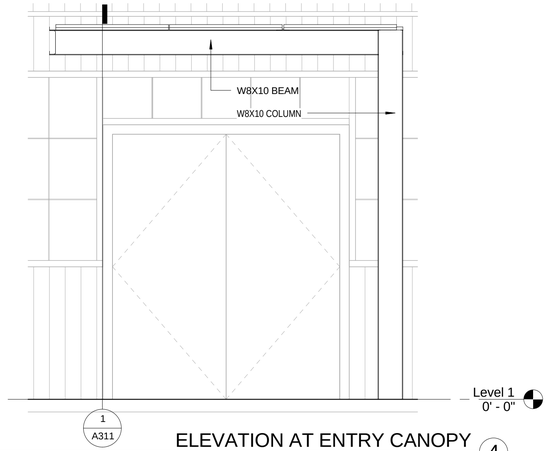

ELEVATION AT ENTRY CANOPY (4)
1/2" = 1'-0"

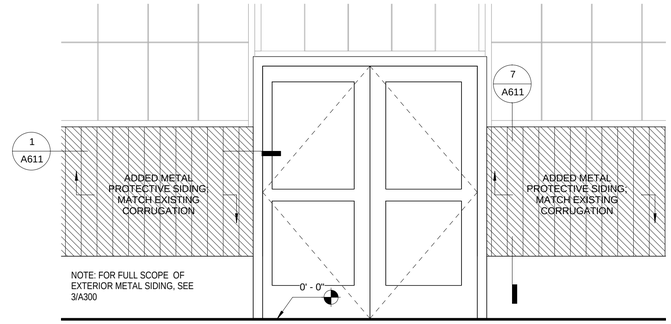

ENLARGED NORTH ELEVATION (3)
1/2" = 1'-0"

NOTES:

SCOPE OF EXTERIOR PAINTING TO INCLUDE:
- ALL CORRUGATED SIDING, INCLUDING VERTICAL, SLOPED, AND SIDING AT ROOF AREAS (EP-1, UON)
- ALL WINDOW MULLIONS AND TRIM (M-1)
- ALL (E) LEAD FLASHING TO BE PAINTED (EP-1)
- ALL DOORS AND JAMBS, INCLUDING ROLL-UP DOORS
- ALL MISCELLANEOUS METAL AND HARDWARE

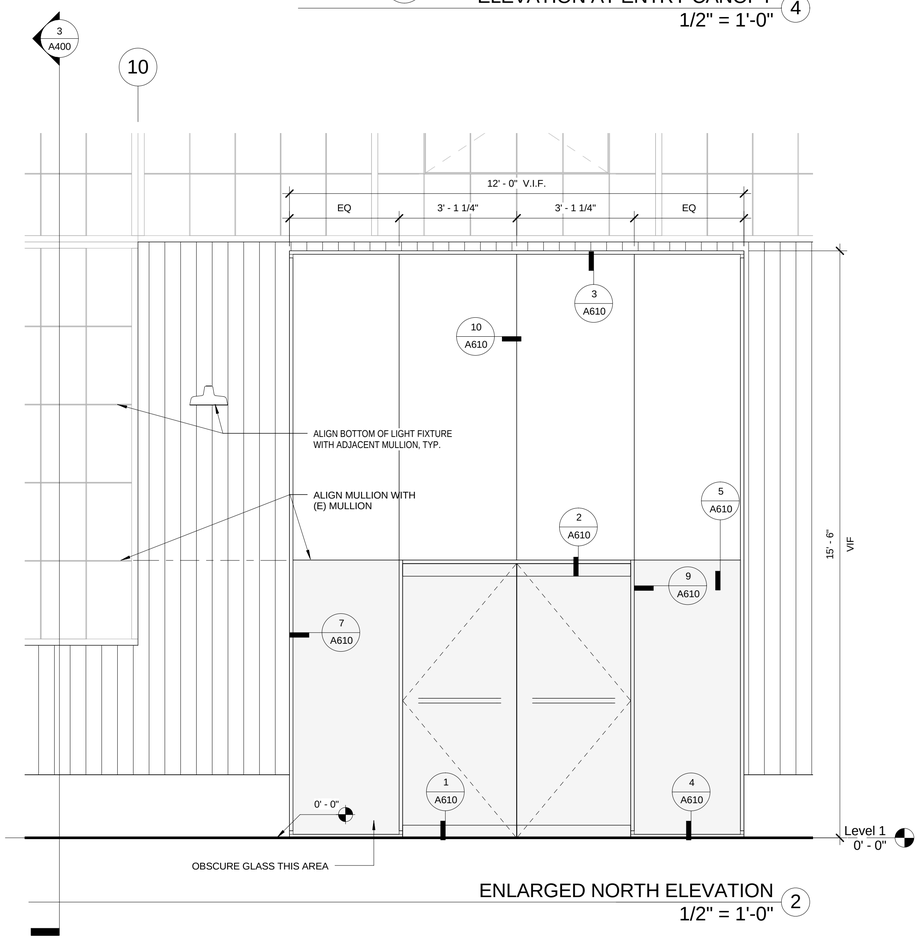

ENLARGED NORTH ELEVATION (2)
1/2" = 1'-0"

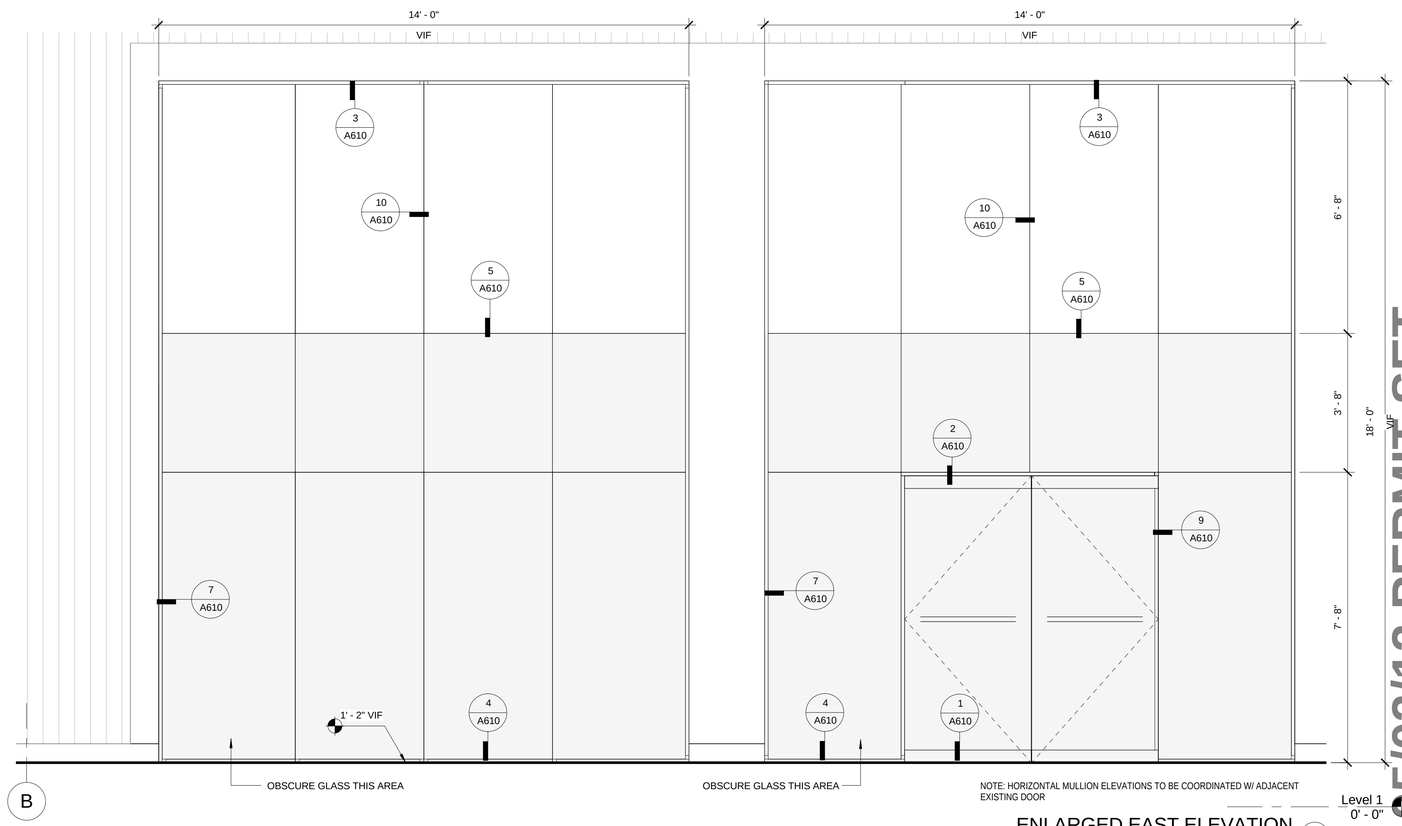

ENLARGED EAST ELEVATION (1)
1/2" = 1'-0"

N

05/03/13 PERMIT SET

5/2/2013 5:30:12 PM

Quincy Wong
DESIGN OVERSIGHT
03/27/13
SIGN OFF DATE

	BY	CHECKED
DESIGN	COREY SCHURR	GREGORY BAKER
DETAILS		
QUANTITIES		

PREPARED FOR THE
STATE OF CALIFORNIA
DEPARTMENT OF TRANSPORTATION

KAREN Y. WANG
PROJECT ENGINEER

BRIDGE NO
POST MILES 2.0

SAN FRANCISCO OAKLAND BAY BRIDGE
EAST SPAN SEISMIC SAFETY PROJECT

IERBYS TEMPORARY IMPROVEMENTS - BUILDING

ENLARGED ELEVATIONS

SHEET A310

DESIGN DETAIL SHEET (ENGLISH) (REV. 03/14/12)

ORIGINAL SCALE IN INCHES FOR REDUCED PLANS 0 1 2 3

UNIT: 04
PROJECT NUMBER AND PHASE:
CONTRACT NO.: 0120F4

DISREGARD PRINTS BEARING EARLIER REVISION DATES

REVISION DATES

SHEET 20 OF 66

C:\Users\cschurr\Documents\56185_Gateway Park - Central_cschurr.rvt

DIST	COUNTY	ROUTE	POST MILES TOTAL PROJECT	SHEET No	TOTAL SHEETS
04	ALA	80	2.0	1204z	1204

REGISTERED ARCHITECT — DATE 03/27/13

PLANS APPROVAL DATE 03/27/13

LICENSED ARCHITECT — GREGORY P. BAKER — C-16884 — 10.31.2013 RENEWAL DATE — STATE OF CALIFORNIA

The state of California or its officers or agents shall not be responsible for the accuracy or completeness of scanned copies of this plan sheet.

HNTB CORPORATION
1111 BROADWAY
9TH FLOOR
OAKLAND, CA 94607

HNTB Corporation Engineers Architects Planners

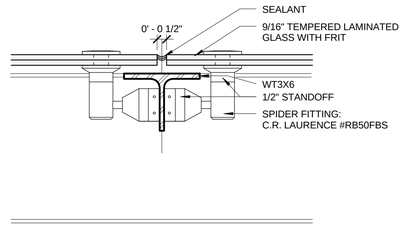

CANOPY CONNECTION AT INTERMEDIATE (9)
3" = 1'-0"

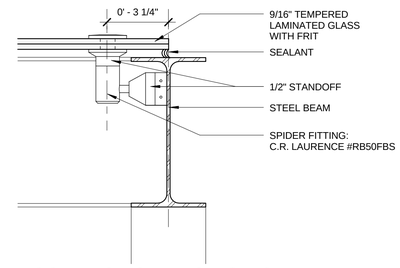

CONNECTION FACING NORTH (6)
3" = 1'-0"

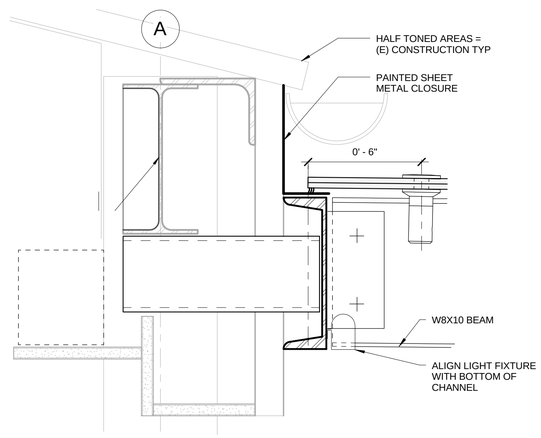

CONNECTION AT EDGE (8)
3" = 1'-0"

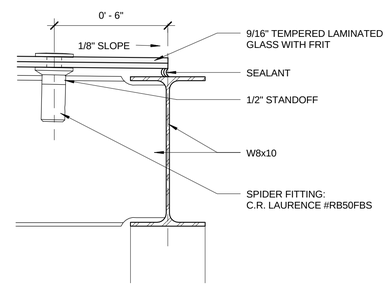

CONNECTION AT EDGE (5)
3" = 1'-0"

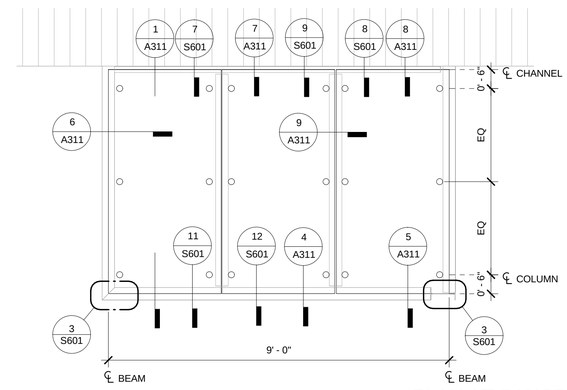

PLAN AT CANOPY (2)
1/2" = 1'-0"

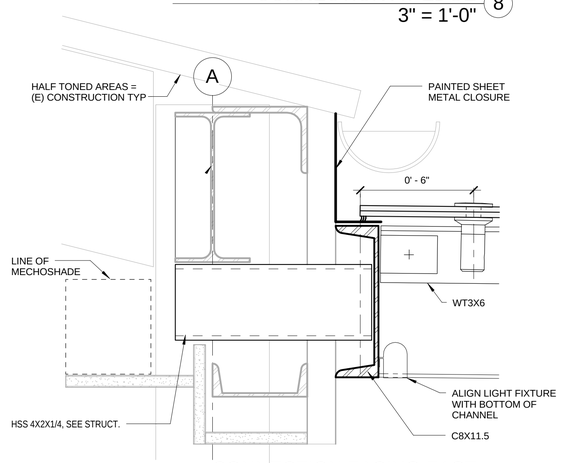

CONNECTION FACING EAST (7)
3" = 1'-0"

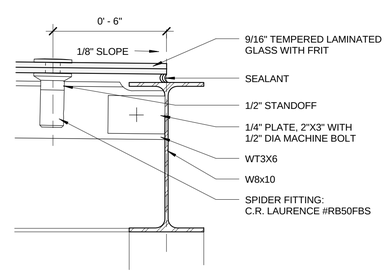

CONNECTION FACING EAST (4)
3" = 1'-0"

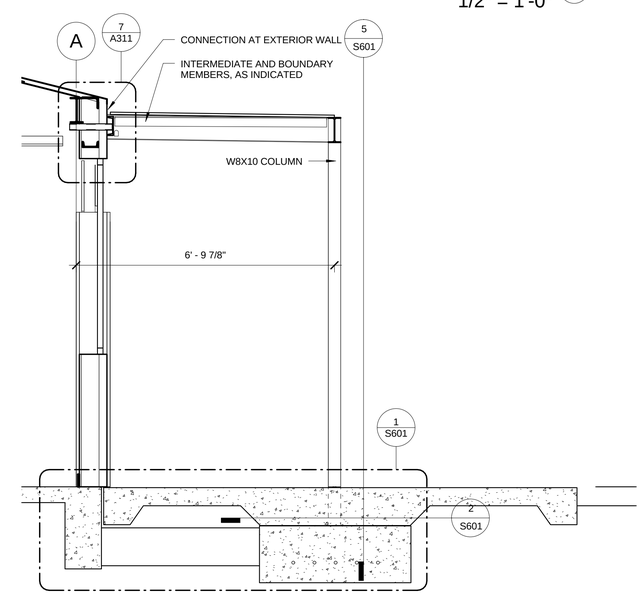

SECTION AT CANOPY FACING EAST (1)
1/2" = 1'-0"

05/03/13 PERMIT SET

5/2/2013 3:04:22 PM

SAN FRANCISCO OAKLAND BAY BRIDGE
EAST SPAN SEISMIC SAFETY PROJECT

IERBYS TEMPORARY IMPROVEMENTS - BUILDING

ENTRY CANOPY

SHEET A311

Quincy Wong
DESIGN OVERSIGHT
03/27/13
SIGN OFF DATE

	BY	CHECKED
DESIGN	COREY SCHURR	GREGORY BAKER
DETAILS		
QUANTITIES		

PREPARED FOR THE STATE OF CALIFORNIA DEPARTMENT OF TRANSPORTATION

KAREN Y. WANG
PROJECT ENGINEER

BRIDGE NO
POST MILES 2.0

DESIGN DETAIL SHEET (ENGLISH) (REV. 03/14/12)

ORIGINAL SCALE IN INCHES FOR REDUCED PLANS 0 1 2 3

UNIT: 04
PROJECT NUMBER AND PHASE:
CONTRACT NO.: 0120F4

DISREGARD PRINTS BEARING EARLIER REVISION DATES

REVISION DATES

SHEET 21 OF 66

C:\Users\cschurr\Documents\56185_Gateway Park - Central_cschurr.rvt

DIST	COUNTY	ROUTE	POST MILES TOTAL PROJECT	SHEET No	TOTAL SHEETS
04	ALA	80	2.0	1204aa	1204

REGISTERED ARCHITECT — DATE 03/27/13

PLANS APPROVAL DATE 03/27/13

LICENSED ARCHITECT — GREGORY P. BAKER — C-16884 — 10.31.2013 RENEWAL DATE — STATE OF CALIFORNIA

The state of California or its officers or agents shall not be responsible for the accuracy or completeness of scanned copies of this plan sheet.

HNTB CORPORATION
1111 BROADWAY
9TH FLOOR
OAKLAND, CA 94607

HNTB Corporation
Engineers Architects Planners

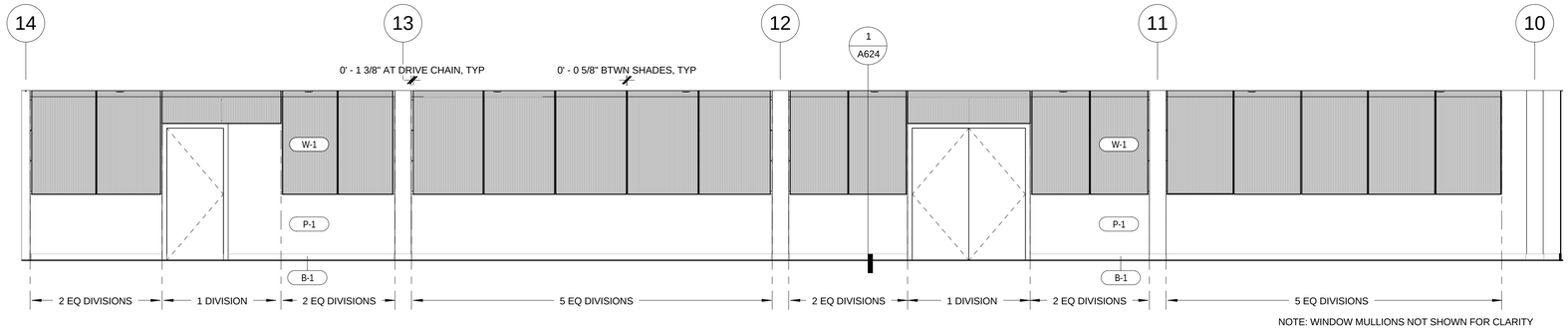

NOTE: WINDOW MULLIONS NOT SHOWN FOR CLARITY

SOUTH LOBBY - WITH WINDOW SHADES (3)
1/4" = 1'-0"

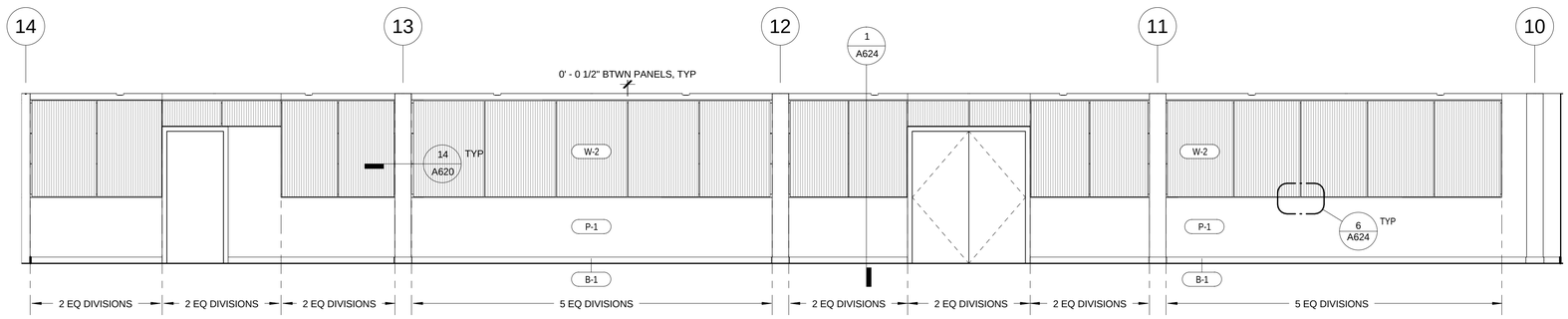

NOTE: WINDOW MULLIONS NOT SHOWN FOR CLARITY
FOR WINDOW SHADES, SEE 3/-

SOUTH LOBBY - WITH ACRYLIC PANELS (2)
1/4" = 1'-0"

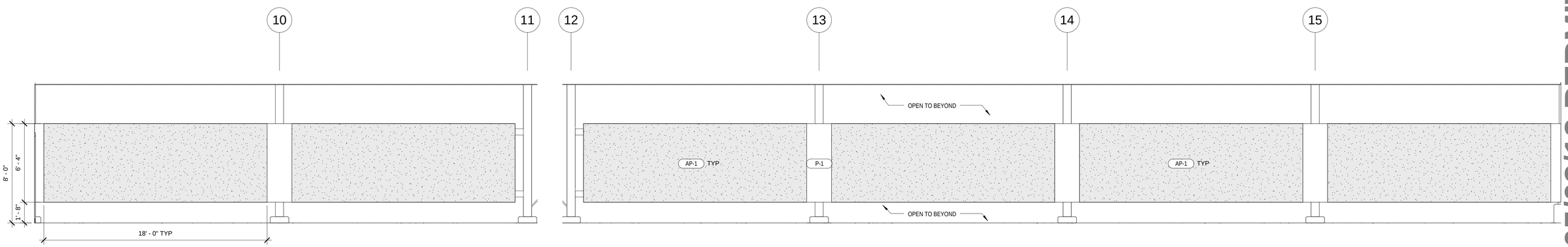

NORTH LOBBY - WITH ACOUSTIC PANELS (1)
1/4" = 1'-0"

NOTES:

SCOPE OF INTERIOR PAINTING TO INCLUDE:
- ALL CORRUGATED SIDING (P-2, U.O.N.)
- ALL WINDOW MULLIONS AND TRIM (P-2, U.O.N.)
- ALL STEEL STRUCTURAL COMPONENTS, INCLUDING COLUMNS, BEAMS, GIRTS, AND MISCELLANEOUS METAL (P-2, U.O.N.)
- ALL SLOPED AND VERTICAL WOOD FRAMING MEMBERS AND DECKING (P-2, U.O.N.)
- ALL WALLS AND PARTITIONS (P-1, U.O.N.)

05/03/13 PERMIT SET

5/2/2013 3:04:28 PM

SAN FRANCISCO OAKLAND BAY BRIDGE
EAST SPAN SEISMIC SAFETY PROJECT

Quincy Wong
DESIGN OVERSIGHT
03/27/13
SIGN OFF DATE

	BY	CHECKED
DESIGN	COREY SCHURR	GREGORY BAKER
DETAILS	BY	CHECKED
QUANTITIES	BY	CHECKED

PREPARED FOR THE
STATE OF CALIFORNIA
DEPARTMENT OF TRANSPORTATION

KAREN Y. WANG
PROJECT ENGINEER

BRIDGE NO
POST MILES 2.0

IERBYS TEMPORARY IMPROVEMENTS - BUILDING
INTERIOR ELEVATIONS

SHEET A320

DESIGN DETAIL SHEET (ENGLISH) (REV. 03/14/12)

ORIGINAL SCALE IN INCHES FOR REDUCED PLANS 0 1 2 3

UNIT: 04
PROJECT NUMBER AND PHASE:
CONTRACT NO.: 0120F4

DISREGARD PRINTS BEARING EARLIER REVISION DATES

REVISION DATES ___ ___ ___ ___

SHEET 22 OF 66

C:\Users\cschurr\Documents\56185_Gateway Park - Central_cschurr.rvt

DIST	COUNTY	ROUTE	POST MILES TOTAL PROJECT	SHEET No	TOTAL SHEETS
04	ALA	80	2.0	1204ab	1204

REGISTERED ARCHITECT — DATE 03/27/13

PLANS APPROVAL DATE 03/27/13

LICENSED ARCHITECT — GREGORY P. BAKER — C-16884 — 10.31.2013 RENEWAL DATE — STATE OF CALIFORNIA

The state of California or its officers or agents shall not be responsible for the accuracy or completeness of scanned copies of this plan sheet.

HNTB CORPORATION
1111 BROADWAY
9TH FLOOR
OAKLAND, CA 94607

HNTB Corporation
Engineers Architects Planners

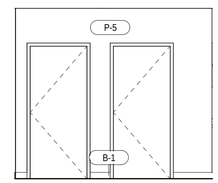

CORRIDOR - WEST 16
1/4" = 1'-0"

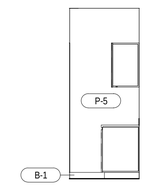

BREAK AREA - WEST 15
1/4" = 1'-0"

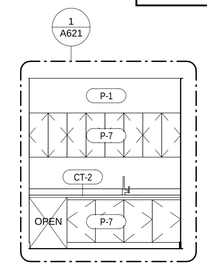

BREAK AREA 14
1/4" = 1'-0"

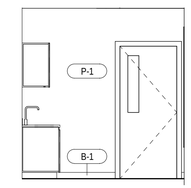

BREAK AREA - EAST 13
1/4" = 1'-0"

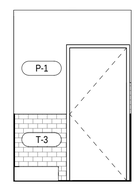

WEST 12
1/4" = 1'-0"

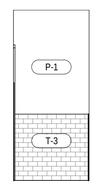

NORTH 11
1/4" = 1'-0"

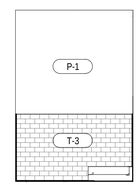

EAST 10
1/4" = 1'-0"

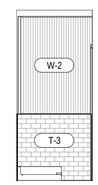

SOUTH 9
1/4" = 1'-0"

JANITOR'S CLOSET ELEVATION

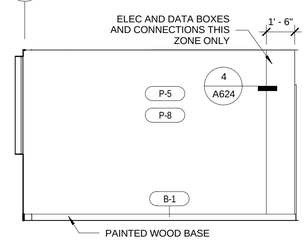

LOBBY - WEST 8
1/4" = 1'-0"

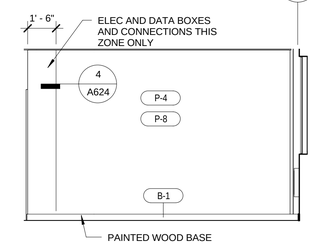

LOBBY - EAST 7
1/4" = 1'-0"

END OF CORRIDOR - EAST 6
1/4" = 1'-0"

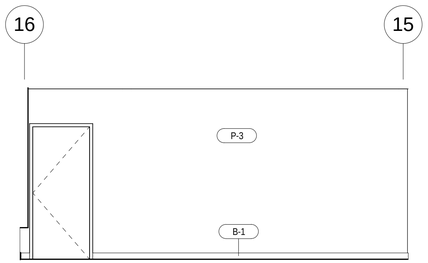

CORRIDOR - EAST 5
1/4" = 1'-0"

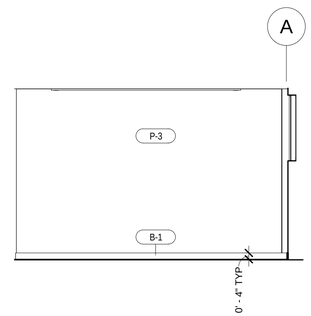

OFFICE - EAST 4
1/4" = 1'-0"

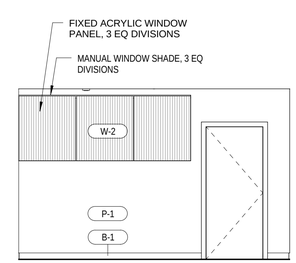

OFFICE - SOUTH 3
1/4" = 1'-0"

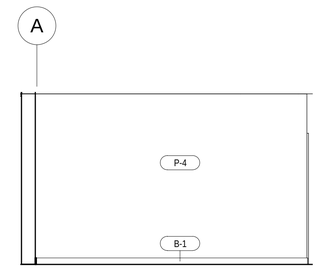

OFFICE - WEST 2
1/4" = 1'-0"

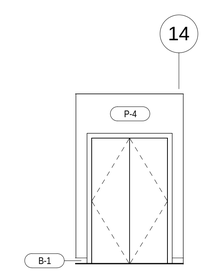

CORRIDOR - TELECOM ELEV 1
1/4" = 1'-0"

05/03/13 PERMIT SET

5/2/2013 3:04:36 PM

SAN FRANCISCO OAKLAND BAY BRIDGE
EAST SPAN SEISMIC SAFETY PROJECT

IERBYS TEMPORARY IMPROVEMENTS - BUILDING

INTERIOR ELEVATIONS

SHEET A321

Quincy Wong
DESIGN OVERSIGHT

03/27/13
SIGN OFF DATE

	BY	CHECKED
DESIGN	COREY SCHURR	GREGORY BAKER
DETAILS	BY	CHECKED
QUANTITIES	BY	CHECKED

PREPARED FOR THE
STATE OF CALIFORNIA
DEPARTMENT OF TRANSPORTATION

KAREN Y. WANG
PROJECT ENGINEER

BRIDGE NO
POST MILES 2.0

DESIGN DETAIL SHEET (ENGLISH) (REV. 03/14/12)

ORIGINAL SCALE IN INCHES FOR REDUCED PLANS 0 1 2 3

UNIT: 04
PROJECT NUMBER AND PHASE:
CONTRACT NO.: 0120F4

DISREGARD PRINTS BEARING EARLIER REVISION DATES

REVISION DATES ___ ___ ___ ___

SHEET 23 OF 66

C:\Users\cschurr\Documents\56185_Gateway Park - Central_cschurr.rvt

DIST	COUNTY	ROUTE	POST MILES TOTAL PROJECT	SHEET No	TOTAL SHEETS
04	ALA	80	2.0	1204ac	1204

REGISTERED ARCHITECT — DATE 03/27/13

PLANS APPROVAL DATE 03/27/13

LICENSED ARCHITECT — GREGORY P. BAKER — C-16884 — 10.31.2013 RENEWAL DATE — STATE OF CALIFORNIA

The state of California or its officers or agents shall not be responsible for the accuracy or completeness of scanned copies of this plan sheet.

HNTB CORPORATION
1111 BROADWAY
9TH FLOOR
OAKLAND, CA 94607

HNTB Corporation
Engineers Architects Planners

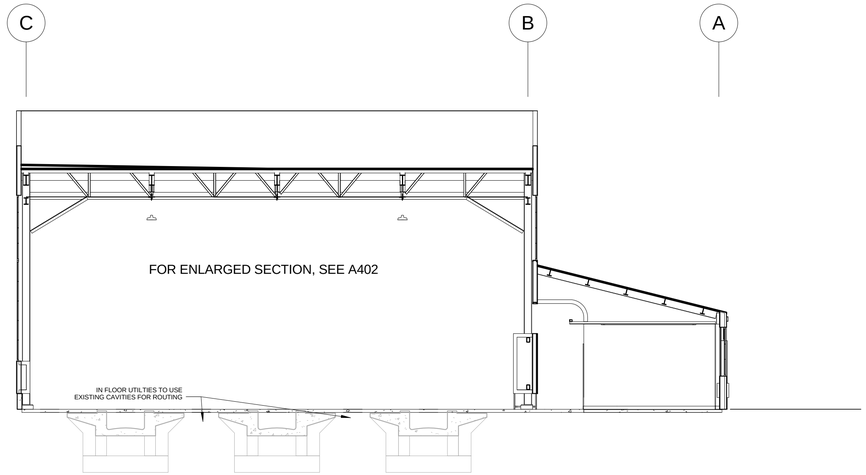

SECTION LOOKING EAST (3)
1/8" = 1'-0"

NOTES:

SCOPE OF INTERIOR PAINTING TO INCLUDE:
- ALL CORRUGATED SIDING (P-2, U.O.N.)
- ALL WINDOW MULLIONS AND TRIM (M-1)
- ALL STEEL STRUCTURAL COMPONENTS, INCLUDING COLUMNS, BEAMS, GIRTS, AND MISCELLANEOUS METAL (P-2, U.O.N.)
- ALL SLOPED AND VERTICAL WOOD FRAMING MEMBERS AND DECKING (P-2, U.O.N.)
- ALL WALLS AND PARTITIONS (P-1, U.O.N.)

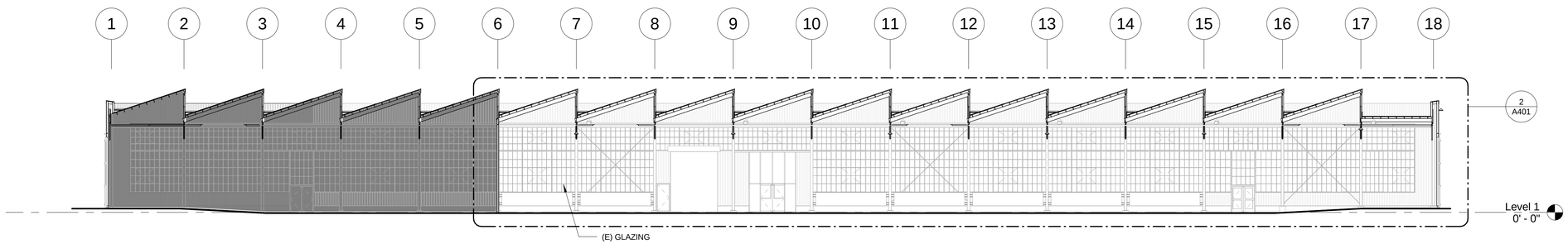

SECTION LOOKING NORTH (2)
1/16" = 1'-0"

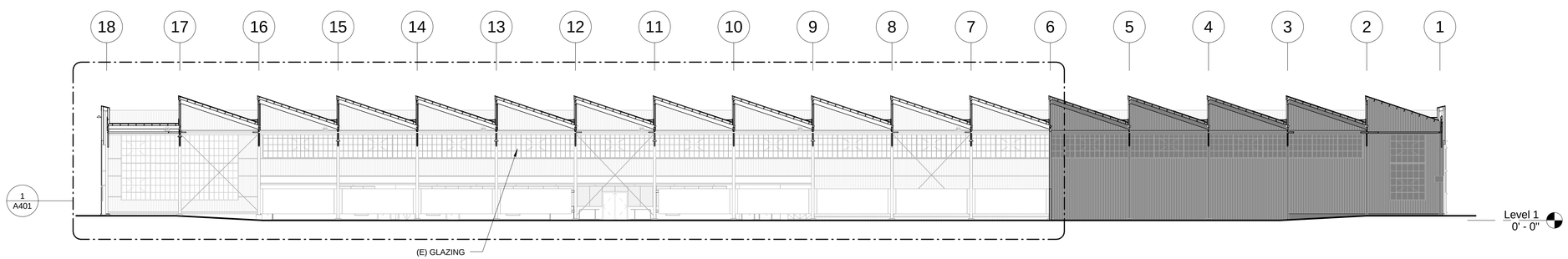

SECTION LOOKING SOUTH (1)
1/16" = 1'-0"

05/03/13 PERMIT SET

5/2/2013 3:04:52 PM

Quincy Wong
DESIGN OVERSIGHT
03/27/13
SIGN OFF DATE

DESIGN DETAIL SHEET (ENGLISH) (REV. 03/14/12)

	BY	CHECKED
DESIGN	COREY SCHURR	GREGORY BAKER
DETAILS	BY	CHECKED
QUANTITIES	BY	CHECKED

PREPARED FOR THE
STATE OF CALIFORNIA
DEPARTMENT OF TRANSPORTATION

KAREN Y. WANG
PROJECT ENGINEER

BRIDGE NO
POST MILES 2.0

SAN FRANCISCO OAKLAND BAY BRIDGE
EAST SPAN SEISMIC SAFETY PROJECT

IERBYS TEMPORARY IMPROVEMENTS - BUILDING

OVERALL SECTIONS

SHEET A400

ORIGINAL SCALE IN INCHES FOR REDUCED PLANS 0 1 2 3

UNIT: 04
PROJECT NUMBER AND PHASE:
CONTRACT NO.: 0120F4

DISREGARD PRINTS BEARING EARLIER REVISION DATES

REVISION DATES				SHEET	OF
				24	66

C:\Users\cschurr\Documents\56185_Gateway Park - Central_cschurr.rvt

DIST	COUNTY	ROUTE	POST MILES TOTAL PROJECT	SHEET No	TOTAL SHEETS
04	ALA	80	2.0	1204ad	1204

REGISTERED ARCHITECT 03/27/13 DATE

LICENSED ARCHITECT GREGORY P. BAKER C-16884 10.31.2013 RENEWAL DATE STATE OF CALIFORNIA

03/27/13
PLANS APPROVAL DATE

The state of California or its officers or agents shall not be responsible for the accuracy or completeness of scanned copies of this plan sheet.

HNTB CORPORATION
1111 BROADWAY
9TH FLOOR
OAKLAND, CA 94607

HNTB Corporation
Engineers Architects Planners

NOTES:

SCOPE OF INTERIOR PAINTING TO INCLUDE:
- ALL CORRUGATED SIDING (P-2, U.O.N.)
- ALL WINDOW MULLIONS AND TRIM (M-1)
- ALL STEEL STRUCTURAL COMPONENTS, INCLUDING COLUMNS, BEAMS, GIRTS, AND MISCELLANEOUS METAL (P-2, U.O.N.)
- ALL SLOPED AND VERTICAL WOOD FRAMING MEMBERS AND DECKING (P-2, U.O.N.)
- ALL WALLS AND PARTITIONS (P-1, U.O.N.)

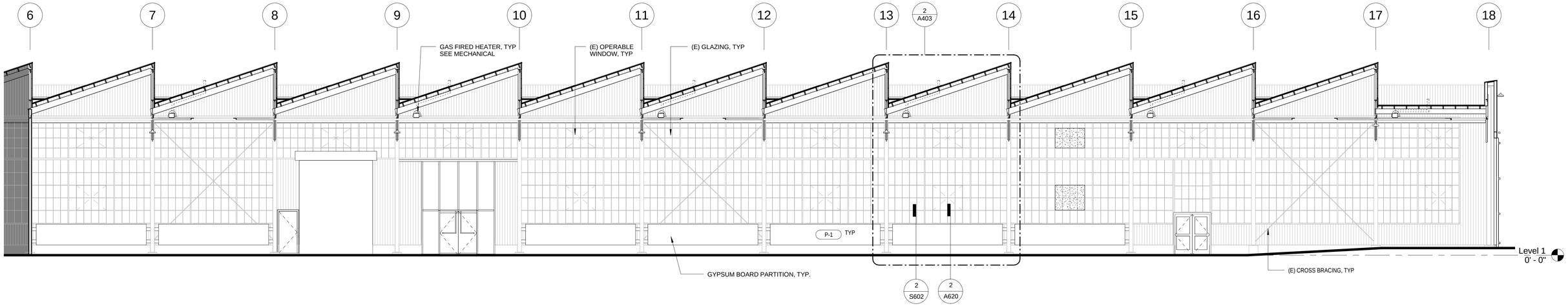

PARTIAL SECTION LOOKING NORTH (2)
1/8" = 1'-0"

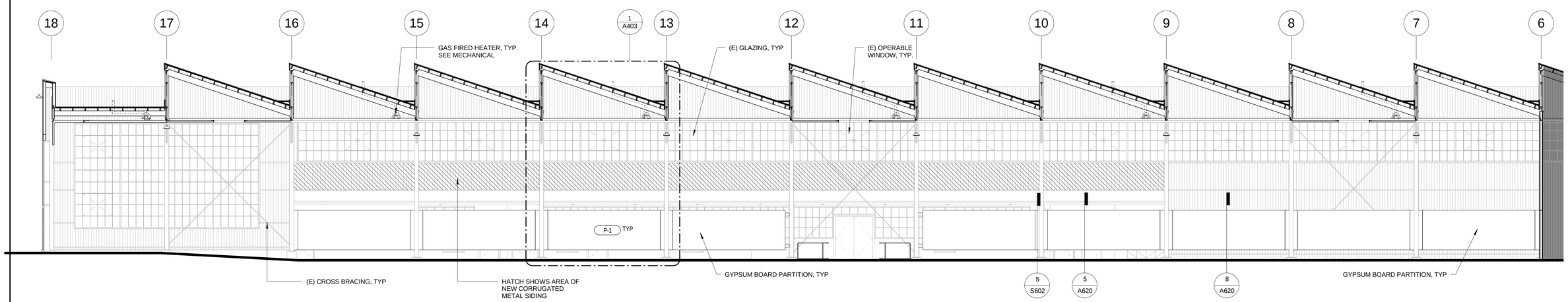

PARTIAL SECTION LOOKING SOUTH (1)
1/8" = 1'-0"

05/03/13 PERMIT SET

5/2/2013 3:05:10 PM

SAN FRANCISCO OAKLAND BAY BRIDGE
EAST SPAN SEISMIC SAFETY PROJECT

IERBYS TEMPORARY IMPROVEMENTS - BUILDING

ENLARGED SECTIONS

SHEET A401

Quincy Wong
DESIGN OVERSIGHT

03/27/13
SIGN OFF DATE

	BY	CHECKED
DESIGN	COREY SCHURR	GREGORY BAKER
DETAILS		
QUANTITIES		

PREPARED FOR THE
STATE OF CALIFORNIA
DEPARTMENT OF TRANSPORTATION

KAREN Y. WANG
PROJECT ENGINEER

BRIDGE NO
POST MILES 2.0

DESIGN DETAIL SHEET (ENGLISH) (REV. 03/14/12)

ORIGINAL SCALE IN INCHES FOR REDUCED PLANS 0 1 2 3

UNIT: 04
PROJECT NUMBER AND PHASE:
CONTRACT NO.: 0120F4

DISREGARD PRINTS BEARING EARLIER REVISION DATES

REVISION DATES

SHEET 25 OF 66

C:\Users\cschurr\Documents\56185_Gateway Park - Central_cschurr.rvt

DIST	COUNTY	ROUTE	POST MILES TOTAL PROJECT	SHEET No	TOTAL SHEETS
04	ALA	80	2.0	1204ae	1204

REGISTERED ARCHITECT 03/27/13 DATE

03/27/13
PLANS APPROVAL DATE

LICENSED ARCHITECT
GREGORY P. BAKER
C-16884
10.31.2013
RENEWAL DATE
STATE OF CALIFORNIA

The state of California or its officers or agents shall not be responsible for the accuracy or completeness of scanned copies of this plan sheet.

HNTB CORPORATION
1111 BROADWAY
9TH FLOOR
OAKLAND, CA 94607

HNTB Corporation
Engineers Architects Planners

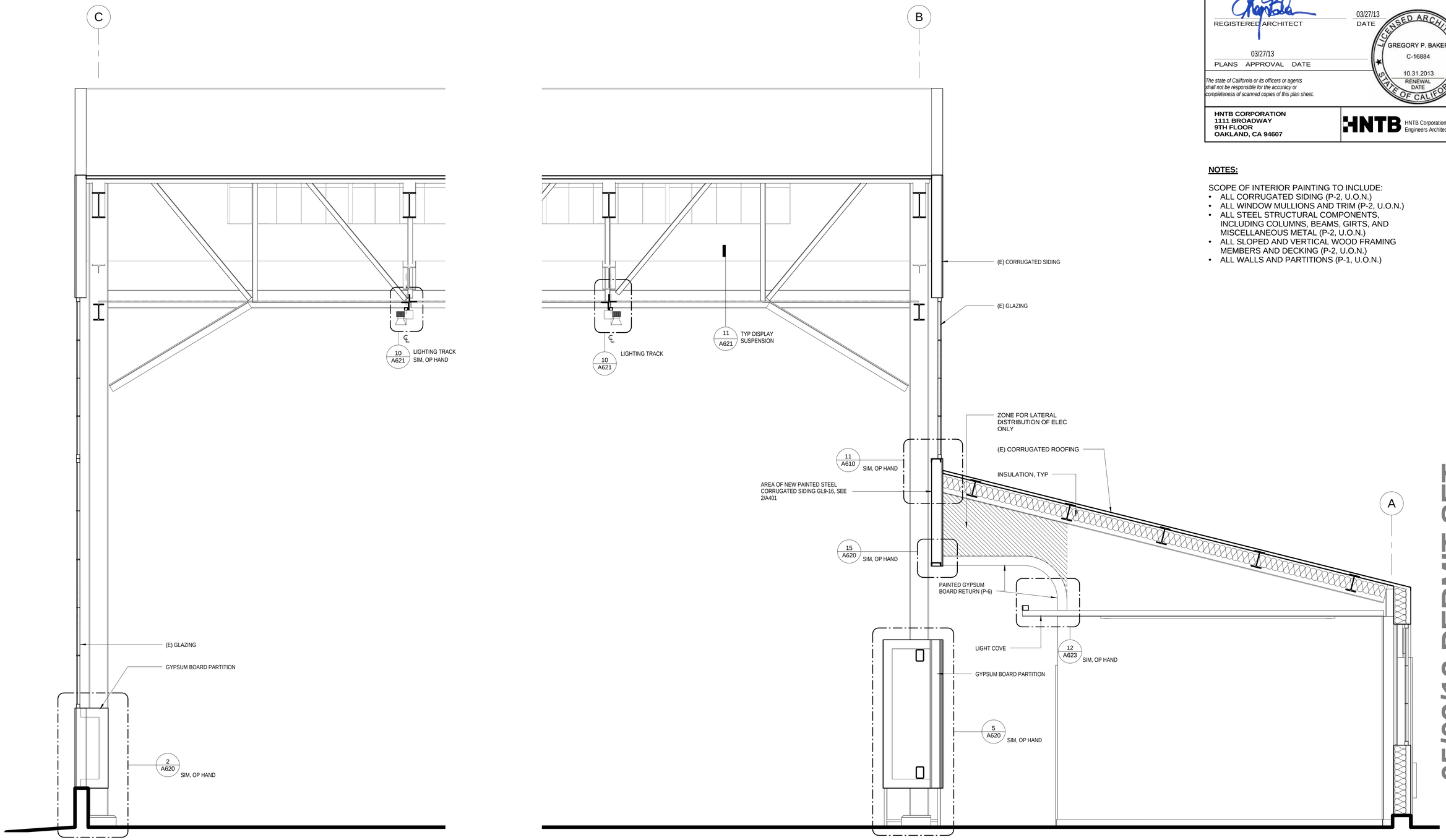

ENLARGED SECTION 1
1/2" = 1'-0"

NOTES:

SCOPE OF INTERIOR PAINTING TO INCLUDE:
- ALL CORRUGATED SIDING (P-2, U.O.N.)
- ALL WINDOW MULLIONS AND TRIM (P-2, U.O.N.)
- ALL STEEL STRUCTURAL COMPONENTS, INCLUDING COLUMNS, BEAMS, GIRTS, AND MISCELLANEOUS METAL (P-2, U.O.N.)
- ALL SLOPED AND VERTICAL WOOD FRAMING MEMBERS AND DECKING (P-2, U.O.N.)
- ALL WALLS AND PARTITIONS (P-1, U.O.N.)

05/03/13 PERMIT SET

5/2/2013 3:05:19 PM

SAN FRANCISCO OAKLAND BAY BRIDGE
EAST SPAN SEISMIC SAFETY PROJECT

IERBYS TEMPORARY IMPROVEMENTS - BUILDING

ENLARGED SECTION LOOKING EAST

SHEET A402

Quincy Wong
DESIGN OVERSIGHT

03/27/13
SIGN OFF DATE

	BY	CHECKED
DESIGN	COREY SCHURR	GREGORY BAKER
DETAILS		
QUANTITIES		

PREPARED FOR THE
STATE OF CALIFORNIA
DEPARTMENT OF TRANSPORTATION

KAREN Y. WANG
PROJECT ENGINEER

BRIDGE NO
POST MILES 2.0

DESIGN DETAIL SHEET (ENGLISH) (REV. 03/14/12)

ORIGINAL SCALE IN INCHES FOR REDUCED PLANS 0 1 2 3

UNIT: 04
PROJECT NUMBER AND PHASE: CONTRACT NO.: 0120F4

DISREGARD PRINTS BEARING EARLIER REVISION DATES

REVISION DATES

SHEET 26 OF 66

C:\Users\cschurr\Documents\56185_Gateway Park - Central_cschurr.rvt

DIST	COUNTY	ROUTE	POST MILES TOTAL PROJECT	SHEET No	TOTAL SHEETS
04	ALA	80	2.0	1204af	1204

REGISTERED ARCHITECT — DATE 03/27/13

PLANS APPROVAL DATE 03/27/13

LICENSED ARCHITECT — GREGORY P. BAKER — C-16884 — 10.31.2013 RENEWAL DATE — STATE OF CALIFORNIA

The state of California or its officers or agents shall not be responsible for the accuracy or completeness of scanned copies of this plan sheet.

HNTB CORPORATION
1111 BROADWAY
9TH FLOOR
OAKLAND, CA 94607

HNTB Corporation
Engineers Architects Planners

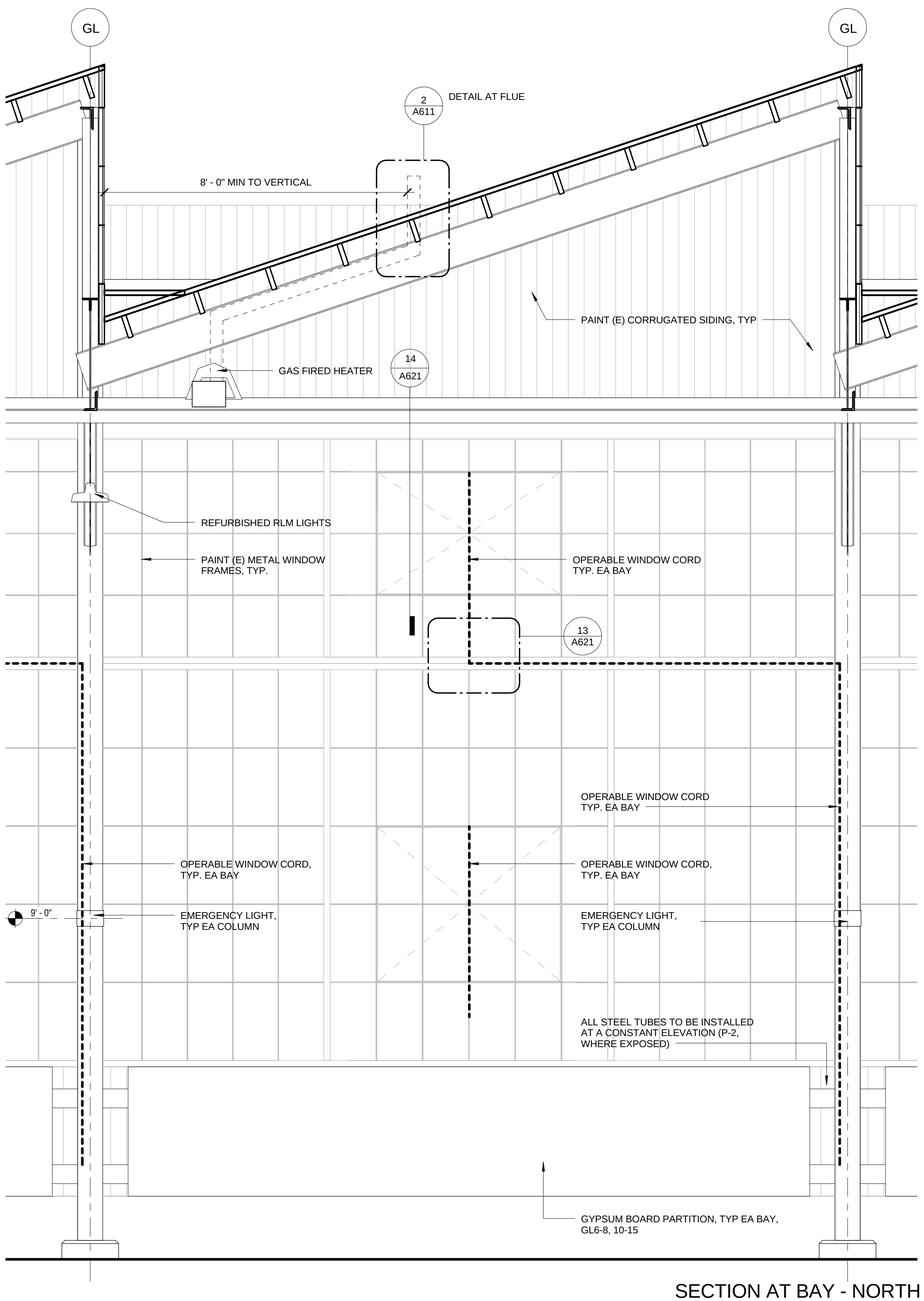

SECTION AT BAY - NORTH (2)
1/2" = 1'-0"

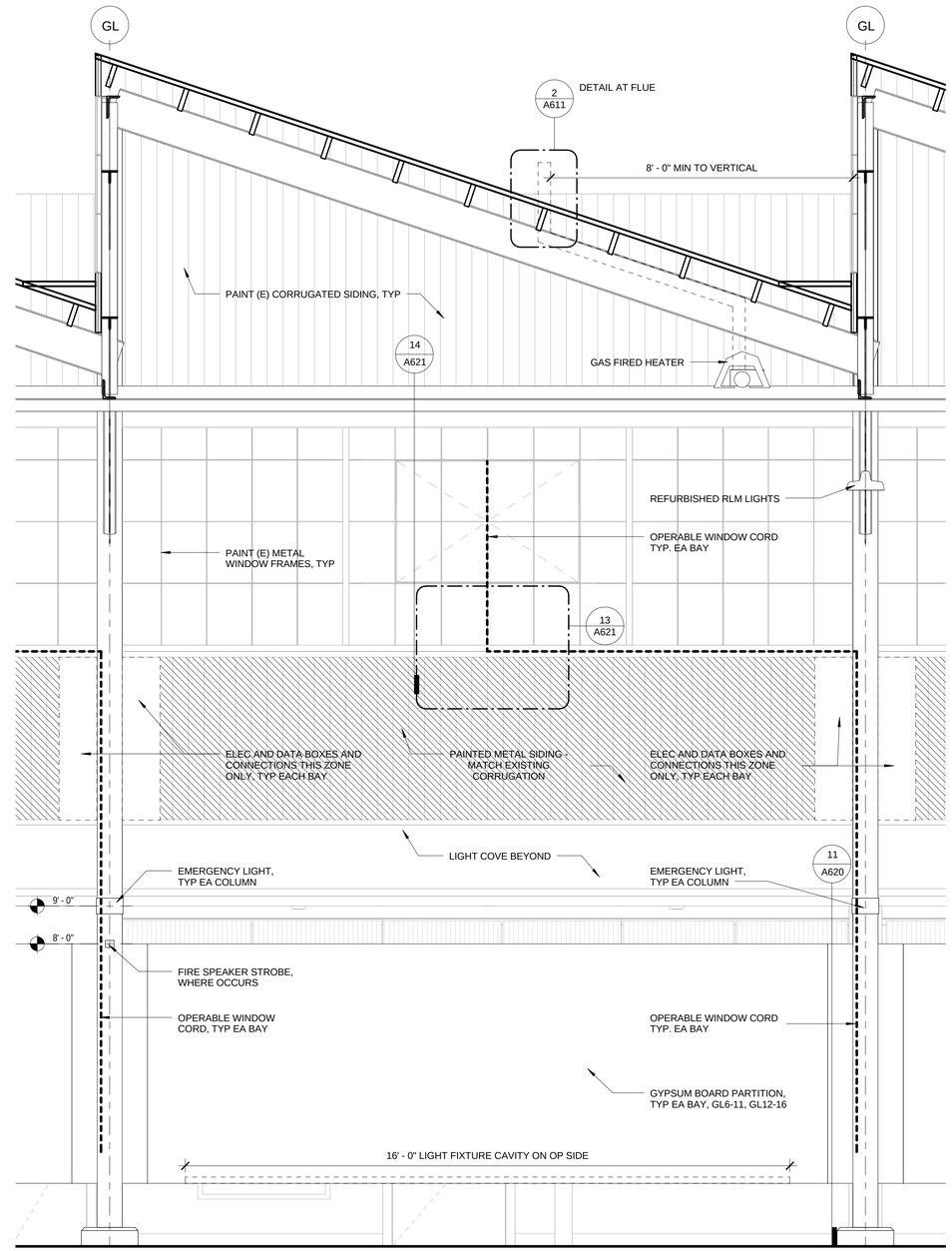

SECTION AT BAY - SOUTH (1)
1/2" = 1'-0"

NOTES:

SCOPE OF INTERIOR PAINTING TO INCLUDE:
- ALL CORRUGATED SIDING (P-2, U.O.N.)
- ALL WINDOW MULLIONS AND TRIM (P-2, U.O.N.)
- ALL STEEL STRUCTURAL COMPONENTS, INCLUDING COLUMNS, BEAMS, GIRTS, AND MISCELLANEOUS METAL (P-2, U.O.N.)
- ALL SLOPED AND VERTICAL WOOD FRAMING MEMBERS AND DECKING (P-2, U.O.N.)
- ALL WALLS AND PARTITIONS (P-1, U.O.N.)

05/03/13 PERMIT SET

5/2/2013 3:05:34 PM

SAN FRANCISCO OAKLAND BAY BRIDGE
EAST SPAN SEISMIC SAFETY PROJECT

Quincy Wong
DESIGN OVERSIGHT
03/27/13
SIGN OFF DATE

	BY	CHECKED
DESIGN	COREY SCHURR	GREGORY BAKER
DETAILS	BY	CHECKED
QUANTITIES	BY	CHECKED

PREPARED FOR THE
STATE OF CALIFORNIA
DEPARTMENT OF TRANSPORTATION

KAREN Y. WANG
PROJECT ENGINEER

BRIDGE NO
POST MILES 2.0

IERBYS TEMPORARY IMPROVEMENTS - BUILDING
ENLARGED SECTION AT BAY, TYP

SHEET A403

DESIGN DETAIL SHEET (ENGLISH) (REV. 03/14/12)

ORIGINAL SCALE IN INCHES FOR REDUCED PLANS 0 1 2 3

UNIT: 04
PROJECT NUMBER AND PHASE:
CONTRACT NO.: 0120F4

DISREGARD PRINTS BEARING EARLIER REVISION DATES

REVISION DATES				SHEET	OF
				27	66

C:\Users\cschurr\Documents\56185_Gateway Park - Central_cschurr.rvt

DIST	COUNTY	ROUTE	POST MILES TOTAL PROJECT	SHEET No	TOTAL SHEETS
04	ALA	80	2.0	1204ag	1204

REGISTERED ARCHITECT 03/27/13 DATE

03/27/13
PLANS APPROVAL DATE

LICENSED ARCHITECT
GREGORY P. BAKER
C-16884
10.31.2013
RENEWAL DATE
STATE OF CALIFORNIA

The state of California or its officers or agents shall not be responsible for the accuracy or completeness of scanned copies of this plan sheet.

HNTB CORPORATION
1111 BROADWAY
9TH FLOOR
OAKLAND, CA 94607

HNTB Corporation
Engineers Architects Planners

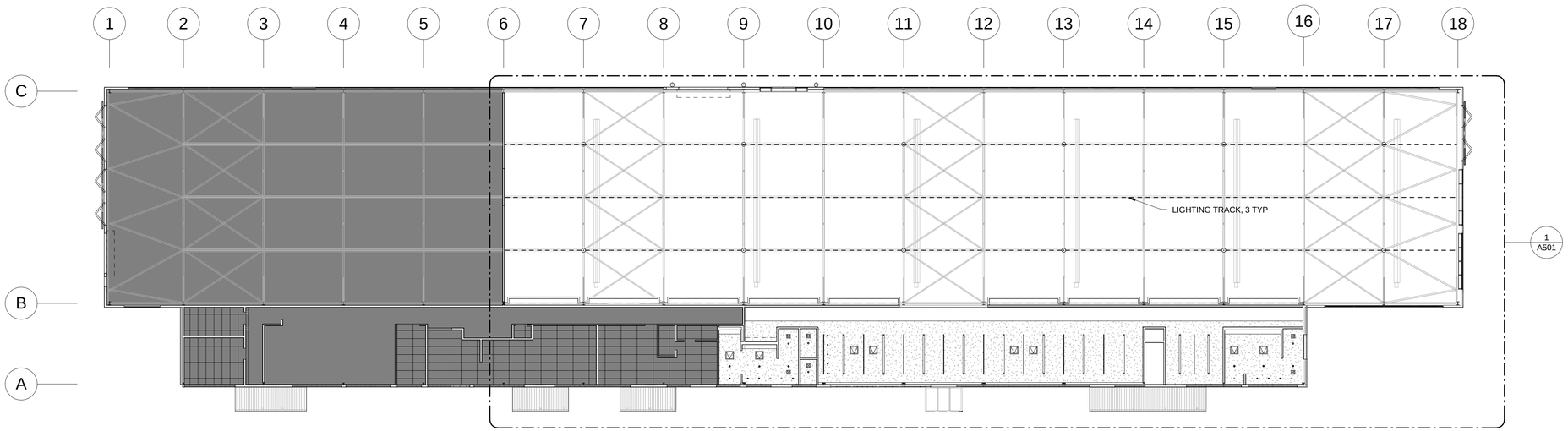

OVERALL RCP (1)
1/16" = 1'-0"

05/03/13 PERMIT SET

N

5/2/2013 3:05:56 PM

SAN FRANCISCO OAKLAND BAY BRIDGE
EAST SPAN SEISMIC SAFETY PROJECT

IERBYS TEMPORARY IMPROVEMENTS - BUILDING

OVERALL REFLECTED CEILING PLAN

SHEET A500

Quincy Wong
DESIGN OVERSIGHT

03/27/13
SIGN OFF DATE

	BY	CHECKED
DESIGN	COREY SCHURR	GREGORY BAKER
DETAILS	BY	CHECKED
QUANTITIES	BY	CHECKED

PREPARED FOR THE
STATE OF CALIFORNIA
DEPARTMENT OF TRANSPORTATION

KAREN Y. WANG
PROJECT ENGINEER

BRIDGE NO

POST MILES 2.0

DESIGN DETAIL SHEET (ENGLISH) (REV. 03/14/12)

ORIGINAL SCALE IN INCHES FOR REDUCED PLANS 0 1 2 3

UNIT: 04
PROJECT NUMBER AND PHASE: CONTRACT NO.: 0120F4

DISREGARD PRINTS BEARING EARLIER REVISION DATES

REVISION DATES				SHEET	OF
___	___	___	___	28	66

C:\Users\cschurr\Documents\56185_Gateway Park - Central_cschurr.rvt

DIST	COUNTY	ROUTE	POST MILES TOTAL PROJECT	SHEET No	TOTAL SHEETS
04	ALA	80	2.0	1204ah	1204

REGISTERED ARCHITECT 03/27/13 DATE

LICENSED ARCHITECT GREGORY P. BAKER C-16884 10.31.2013 RENEWAL DATE STATE OF CALIFORNIA

03/27/13
PLANS APPROVAL DATE

The state of California or its officers or agents shall not be responsible for the accuracy or completeness of scanned copies of this plan sheet.

HNTB CORPORATION
1111 BROADWAY
9TH FLOOR
OAKLAND, CA 94607

HNTB Corporation
Engineers Architects Planners

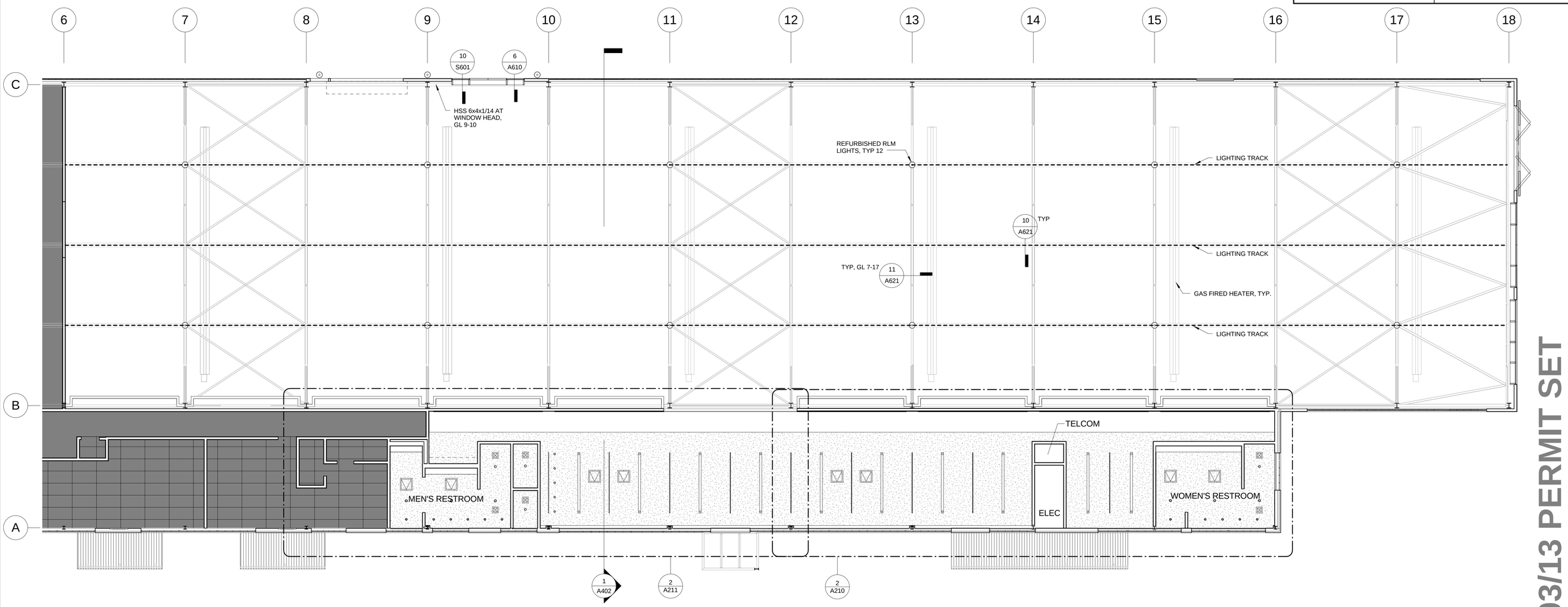

ENLARGED RCP 1
1/8" = 1'-0"

05/03/13 PERMIT SET

5/2/2013 3:06:29 PM

Quincy Wong
DESIGN OVERSIGHT

03/27/13
SIGN OFF DATE

	BY	CHECKED
DESIGN	COREY SCHURR	GREGORY BAKER
DETAILS	BY	CHECKED
QUANTITIES	BY	CHECKED

PREPARED FOR THE
STATE OF CALIFORNIA
DEPARTMENT OF TRANSPORTATION

KAREN Y. WANG
PROJECT ENGINEER

BRIDGE NO
POST MILES 2.0

SAN FRANCISCO OAKLAND BAY BRIDGE
EAST SPAN SEISMIC SAFETY PROJECT

IERBYS TEMPORARY IMPROVEMENTS - BUILDING

ENLARGED REFLECTED CEILING PLAN

SHEET A501

DESIGN DETAIL SHEET (ENGLISH) (REV. 03/14/12)

ORIGINAL SCALE IN INCHES FOR REDUCED PLANS 0 1 2 3

UNIT: 04
PROJECT NUMBER AND PHASE:
CONTRACT NO.: 0120F4

DISREGARD PRINTS BEARING EARLIER REVISION DATES

REVISION DATES ___ ___ ___ ___

SHEET 29 OF 66

C:\Users\cschurr\Documents\56185_Gateway Park - Central_cschurr.rvt

DIST	COUNTY	ROUTE	POST MILES TOTAL PROJECT	SHEET No	TOTAL SHEETS
04	ALA	80	2.0	1204ai	1204

REGISTERED ARCHITECT 03/27/13 DATE

03/27/13
PLANS APPROVAL DATE

LICENSED ARCHITECT
GREGORY P. BAKER
C-16884
10.31.2013
RENEWAL DATE
STATE OF CALIFORNIA

The state of California or its officers or agents shall not be responsible for the accuracy or completeness of scanned copies of this plan sheet.

HNTB CORPORATION
1111 BROADWAY
9TH FLOOR
OAKLAND, CA 94607

HNTB Corporation
Engineers Architects Planners

FINISH SCHEDULE

ID	NAME	SPEC	MANUFACTURER	PRODUCT	COLOR / FINISH
FLOOR					
F-1	POLISHED CONCRETE	033524	-	-	-
F-2	CARPET TILE	096813	INTERFACE	INTERFACE FLOR	COLOR 1: 603054 GREY COLOR 2: 609008 GREY COLOR 3: 603059 ANTHRACITE
F-3	FLOOR TILE	093000	SPEC CERAMICS, INC	EMOTIONS	URBAN GREY
F-4	SEALED CONCRETE	033500	-	-	-
EXTERIOR PAINT					
EP-1	EXTERIOR WHITE	099000	MATCH ARCHITECT SAMPLE	-	-
EP-2	EXTERIOR SILVER	099000	MATCH ARCHITECT SAMPLE	-	-
EP-3	EXTERIOR YELLOW	099000	MATCH ARCHITECT SAMPLE	-	-
MULLION FINISH					
M-1	MULLION COLOR	084413	PPG	DURANAR	SUNLIGHT SILVER UC106681F
INTERIOR PAINT					
P-1	INTERIOR WHITE	099000	MATCH ARCHITECT SAMPLE	-	ICICLE
P-2	INTERIOR SILVER	099000	MATCH ARCHITECT SAMPLE	-	-
P-3	(INTERIOR "POP")	099000	BENJAMIN MOORE	-	MATCH TILE T-2
P-4	(INTERIOR "POP")	099000	BENJAMIN MOORE	-	SNOW CONE GREEN 2026-30
P-5	(INTERIOR "POP")	099000	BENJAMIN MOORE	-	MATCH TILE T-1
P-6	(INTERIOR COVE)	099000	BENJAMIN MOORE	-	BIG COUNTRY BLUE 2066-30
P-7	(CASEWORK PAINT)	099000	MATCH ARCHITECT SAMPLE	-	-
P-8	DRY ERASE COATING	099000	GLIDDEN PRO	IDEA PAINT	CLEAR
ACOUSTIC PANEL					
AP-1	ACOUSTIC PANEL	XXXXXX	DECOUSTICS	-	CARNEGIE XOREL STRIE WHITE
FLOOR BASE					
B-1	4" PAINTED WOOD BASE	062000	PAINTED TO MATCH ADJACENT WALL	-	-
WALL TILE					
T-1	MEN'S RESTROOM TILE	093000	DALTILE	SEMI-GLOSS (6"X3")	SUNFLOWER DH50
T-2	WOMEN'S RESTROOM TILE	093000	DALTILE	SEMI-GLOSS (6"X3")	ORANGE BURST Q097
T-3	JANITOR TILE - WHITE	093000	DALTILE	SEMI-GLOSS (6"X3")	WHITE K101
COUNTERTOPS					
CT-1	RESTROOM - GREY	123664	COSENTINO	SILESTONE	SILVER NUBE
CT-2	BREAK AREA - WHITE	123664	DUPONT	CORIAN	GLACIER WHITE
WINDOW TREATMENT					
W-1	MECHO SHADES	122413	MECHOSHADE SYSTEMS	EUROTWILL 6200 SERIES	2% OPEN
W-2	ACRYLIC PANEL	068213	3FORM	DUO	CRYSTAL

TOILET ACCESSORY SCHEDULE

ID	NAME	MANUFACTURER	PRODUCT	NOTES
A-1	RECESSED SEAT-COVER, SANITARY NAPKIN, AND TOILET TISSUE DISPENSER	BOBRICK	B-3574	
A-2	PARTITION MOUNTED SEAT-COVER, SANITARY NAPKIN, AND TOILET TISSUE DISPENSER	BOBRICK	B-357	
A-3	RECESSED SEAT-COVER AND TOILET TISSUE DISPENSER	BOBRICK	B-3474	
A-4	STAINLESS STEEL GRAB BAR	BOBRICK	B-6806	SATIN FINISH
A-5	CLOTHES HOOK	BOBRICK	B-233	SATIN FINISH
A-6	LAVATORY MOUNTED SOAP DISPENSER	BOBRICK	B-8226	

FOR SPECIFICATIONS, SEE SECTION 102813

Door Schedule (Existing)

Room Name	Door Number	Type	Hardware	Door Width	Door Height	Door Thickness	Door Material	Frame Material	Interior/Exterior	Comments
STORAGE	08B	F	04	N/A	N/A	N/A	METAL		EXT	(E) TO REMAIN/PAINT/NOTE 7
STORAGE	09B	A	09	N/A	N/A	N/A	METAL		INT	(E) TO REMAIN/PAINT
STORAGE	15A	G	11	N/A	N/A	N/A	WOOD/GLASS		EXT	NOTE 1, 3, 6
STORAGE	18A	E	02	N/A	N/A	N/A	WOOD		EXT	NOTE 1, DOOR TO REMAIN FIXED

Door Schedule

Room Name	Door Number	Type	Hardware	Door Width	Door Height	Door Thickness	Door Material	Frame Material	Interior/Exterior	Comments
STORAGE	08A	B	05	3' - 0"	6' - 10"	0' - 1 3/4"	METAL		EXT	REPLACE WITH SOLID PANEL
STORAGE	09A	D	01	6' - 0 1/4"	7' - 2 7/8"	0' - 0 3/4"	GLASS	AL	EXT	PANIC HARDWARE
MEN'S RESTROOM	09C	B	10	3' - 0"	7' - 0"	0' - 1 3/4"	METAL	METAL	INT	THRESHOLD - SEE 1/A624
STORAGE	09D	B	06	3' - 0"	7' - 0"	0' - 1 3/4"	METAL		INT	
JANITOR	09E	B	06	3' - 0"	7' - 0"	0' - 1 3/4"	METAL			
LOW BAY	11A	C	03	6' - 0"	7' - 0"	0' - 1 3/4"	METAL	METAL	EXT	PANIC HARDWARE/NOTE 2
LOW BAY	13A	B	05	3' - 0"	7' - 0"	0' - 1 3/4"	METAL		EXT	NOTE 4
TELCOM	14A	C	12	4' - 0"	6' - 8"	0' - 1 3/4"	METAL		INT	
ELEC	14B	B	08	3' - 0"	7' - 0"	0' - 1 3/4"	METAL		EXT	NOTE 5/NOTE 7
LOW BAY	14C	B	05	3' - 0"	7' - 0"	0' - 1 3/4"	METAL		EXT	NOTE 4
WOMEN'S RESTROOM	15B	B	10	3' - 0"	7' - 0"	0' - 1 3/4"	METAL	METAL	INT	THRESHOLD - SEE 1/A624
STORAGE	18B	D	01	6' - 8 3/8"	7' - 6 7/8"	0' - 0 3/4"	GLASS	AL	EXT	PANIC HARDWARE

NOTES:

1. PATCH, SAND SMOOTH, AND PAINT EXISTING WOOD DOORS, FRAMES, AND EXISTING METAL HARDWARE.
2. REMOVE PAINT OR REPLACE PANES WHERE PAINTED WINDOWS OCCUR.
3. RESTORE DOOR TO ORIGINAL CONDITION; REPLACE (E) WOOD PANEL WITH GLASS AS INDICATED.
4. DOOR TO REMAIN PERMANENTLY LOCKED/DEADBOLT ONLY.
5. PATCH, SAND SMOOTH AND PAINT (E) DOOR FRAME.
6. ADD MATERIAL AS NEEDED TO INFILL FRAME TO MATCH EXISTING DOOR SIZE. PATCH AND PAINT TO MATCH.
7. MAXIMUM 1/2" OFFSET AT EACH SIDE OF THRESHOLD, TYP.
8. ALL DOOR LEVER HANDLES TO BE INSTALLED AT 36" A.F.F.

* ALL DOORS AND FRAMES NON-RATED.

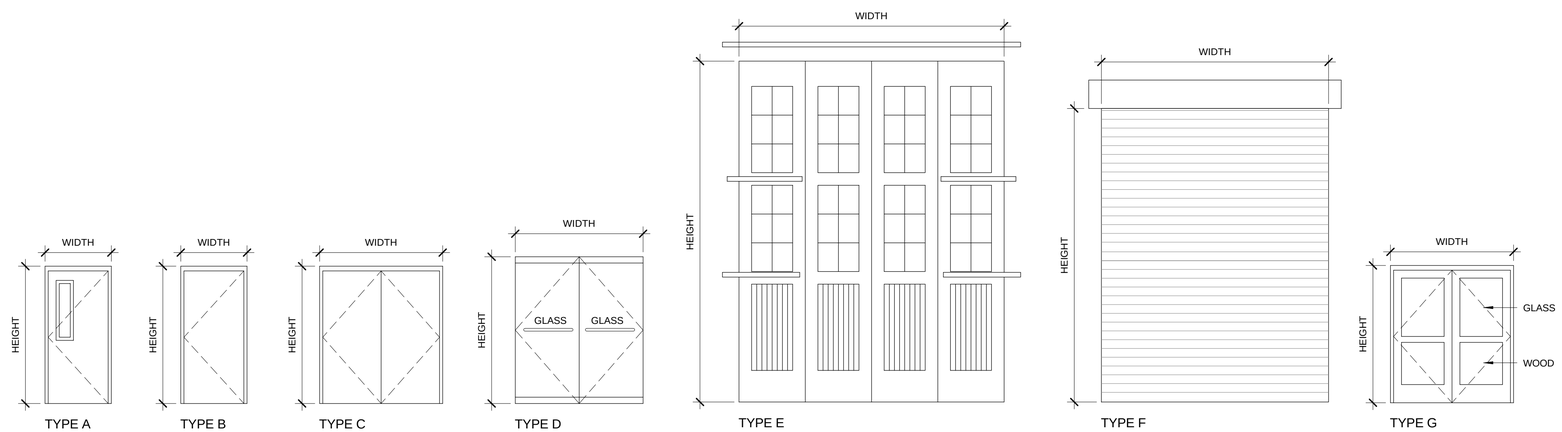

DOOR TYPES

05/03/13 PERMIT SET

5/2/2013 3:06:36 PM

SAN FRANCISCO OAKLAND BAY BRIDGE EAST SPAN SEISMIC SAFETY PROJECT

Quincy Wong
DESIGN OVERSIGHT
03/27/13
SIGN OFF DATE

	BY	CHECKED
DESIGN	COREY SCHURR	GREGORY BAKER
DETAILS	BY	CHECKED
QUANTITIES	BY	CHECKED

PREPARED FOR THE
STATE OF CALIFORNIA
DEPARTMENT OF TRANSPORTATION

KAREN Y. WANG
PROJECT ENGINEER

BRIDGE NO
POST MILES 2.0

IERBYS TEMPORARY IMPROVEMENTS - BUILDING
SCHEDULES

SHEET A600

DESIGN DETAIL SHEET (ENGLISH) (REV. 03/14/12)

ORIGINAL SCALE IN INCHES FOR REDUCED PLANS 0 1 2 3

UNIT: 04
PROJECT NUMBER AND PHASE:
CONTRACT NO.: 0120F4

DISREGARD PRINTS BEARING EARLIER REVISION DATES

REVISION DATES ___ ___ ___ ___

SHEET 30 OF 66

C:\Users\cschurr\Documents\56185_Gateway Park - Central_cschurr.rvt

DIST	COUNTY	ROUTE	POST MILES TOTAL PROJECT	SHEET No	TOTAL SHEETS
04	ALA	80	2.0	1204aj	1204

REGISTERED ARCHITECT — DATE 03/27/13

PLANS APPROVAL DATE 03/27/13

LICENSED ARCHITECT — GREGORY P. BAKER — C-16884 — 10.31.2013 RENEWAL DATE — STATE OF CALIFORNIA

The state of California or its officers or agents shall not be responsible for the accuracy or completeness of scanned copies of this plan sheet.

HNTB CORPORATION
1111 BROADWAY
9TH FLOOR
OAKLAND, CA 94607

HNTB Corporation
Engineers Architects Planners

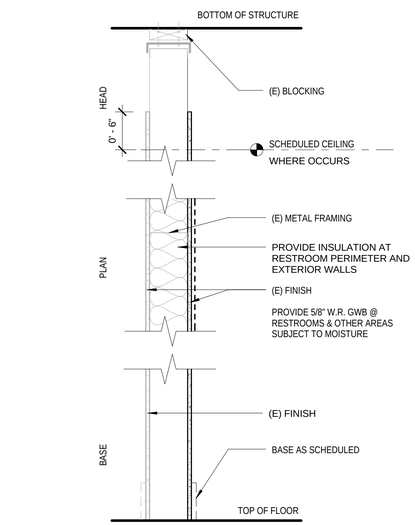

A3.0 — 1 LAYER OF 5/8" GWB ON (E) WALL FRAMING - NON-RATED

TYPE A3

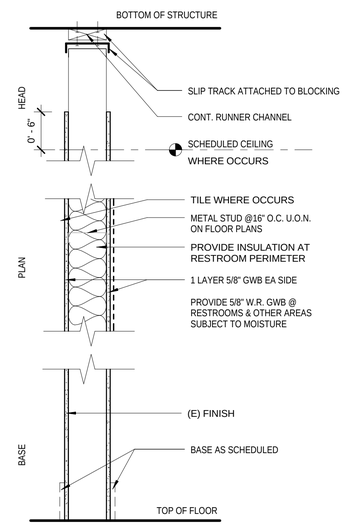

A2.0 — 4" STUD PARTITION WITH GWB BOTH SIDES - NON-RATED

A2.1 — 6" STUD PARTITION WITH GWB BOTH SIDES - NON-RATED

A2.2 — 6" STUD PARTITION WITH GWB BOTH SIDES W/ INSULATION

TYPE A2

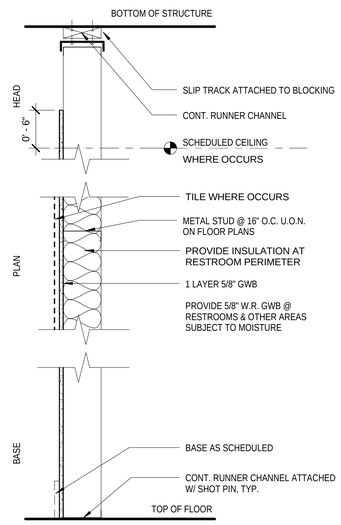

A1.0 — 2 1/2" STUD PARTITION WITH GWB ONE SIDE - NON-RATED

A1.1 — 4" STUD PARTITION WITH GWB ONE SIDE - NON-RATED

A1.2 — 6" STUD PARTITION WITH GWB ONE SIDE - NON-RATED

TYPE A1

05/03/13 PERMIT SET

5/2/2013 3:06:42 PM

SAN FRANCISCO OAKLAND BAY BRIDGE
EAST SPAN SEISMIC SAFETY PROJECT

IERBYS TEMPORARY IMPROVEMENTS - BUILDING

WALL TYPES

SHEET A601

Quincy Wong
DESIGN OVERSIGHT

03/27/13
SIGN OFF DATE

	BY	CHECKED
DESIGN	COREY SCHURR	GREGORY BAKER
DETAILS		
QUANTITIES		

PREPARED FOR THE
STATE OF CALIFORNIA
DEPARTMENT OF TRANSPORTATION

KAREN Y. WANG
PROJECT ENGINEER

BRIDGE NO
POST MILES 2.0

DESIGN DETAIL SHEET (ENGLISH) (REV. 03/14/12)

ORIGINAL SCALE IN INCHES FOR REDUCED PLANS 0 1 2 3

UNIT: 04
PROJECT NUMBER AND PHASE:
CONTRACT NO.: 0120F4

DISREGARD PRINTS BEARING EARLIER REVISION DATES

REVISION DATES ___ ___ ___ ___

SHEET 31 OF 66

C:\Users\cschurr\Documents\56185_Gateway Park - Central_cschurr.rvt

DIST	COUNTY	ROUTE	POST MILES TOTAL PROJECT	SHEET No	TOTAL SHEETS
04	ALA	80	2.0	1204ak	1204

REGISTERED ARCHITECT 03/27/13 DATE

LICENSED ARCHITECT GREGORY P. BAKER C-16884 10.31.2013 RENEWAL DATE STATE OF CALIFORNIA

03/27/13
PLANS APPROVAL DATE

The state of California or its officers or agents shall not be responsible for the accuracy or completeness of scanned copies of this plan sheet.

HNTB CORPORATION
1111 BROADWAY
9TH FLOOR
OAKLAND, CA 94607

HNTB Corporation
Engineers Architects Planners

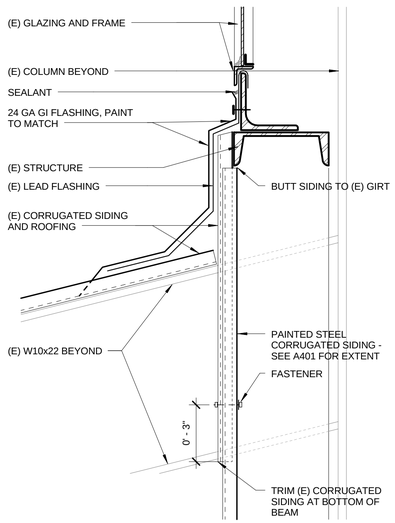

DETAIL AT WINDOW SILL (11)
3" = 1'-0"

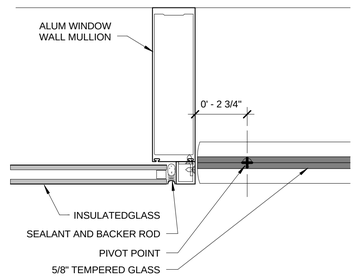

INFILL GLAZING AT DOOR JAMB (9)
3" = 1'-0"

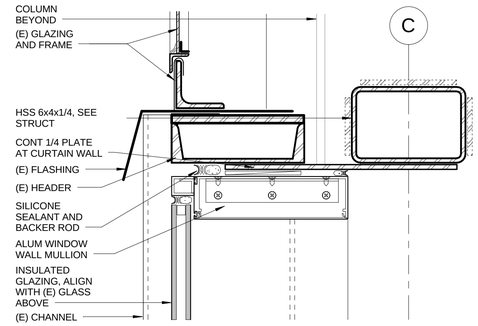

NORTH INFILL GLAZING AT HEAD (6)
3" = 1'-0"

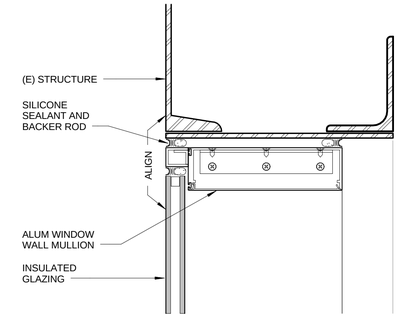

EAST INFILL GLAZING AT HEAD (3)
3" = 1'-0"

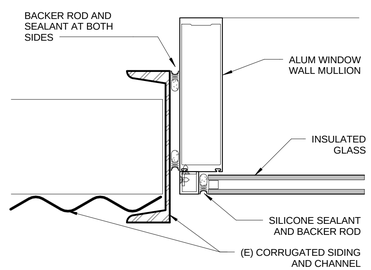

NORTH INFILL GLAZING AT JAMB (8)
3" = 1'-0"

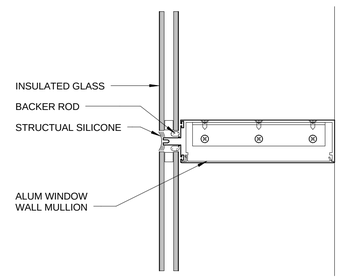

INFILL GLAZING AT HORIZONTAL MULLION (5)
3" = 1'-0"

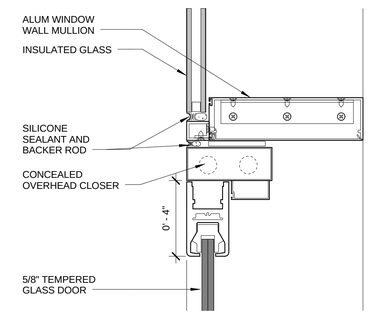

DOOR HEAD (2)
3" = 1'-0"

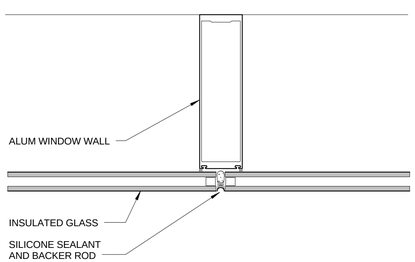

INFILL GLAZING AT VERTICAL MULLION (10)
3" = 1'-0"

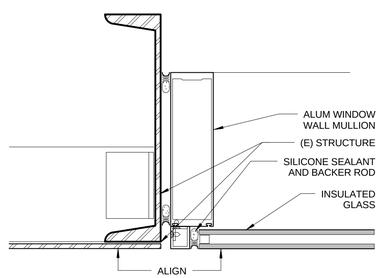

EAST INFILL GLAZING AT JAMB (7)
3" = 1'-0"

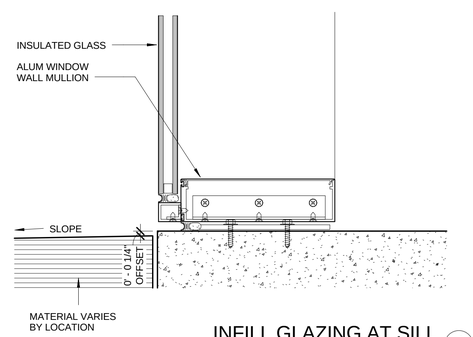

INFILL GLAZING AT SILL (4)
3" = 1'-0"

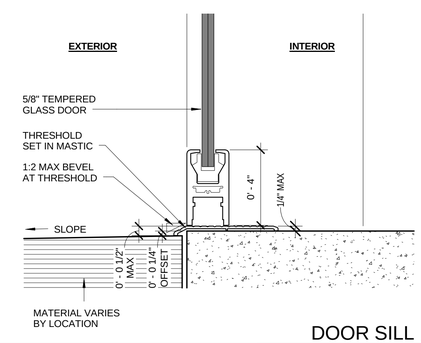

DOOR SILL (1)
3" = 1'-0"

05/03/13 PERMIT SET

5/2/2013 3:06:48 PM

SAN FRANCISCO OAKLAND BAY BRIDGE
EAST SPAN SEISMIC SAFETY PROJECT

IERBYS TEMPORARY IMPROVEMENTS - BUILDING

EXTERIOR DETAILS

SHEET A610

Quincy Wong
DESIGN OVERSIGHT

03/27/13
SIGN OFF DATE

	BY	CHECKED
DESIGN	COREY SCHURR	GREGORY BAKER
DETAILS		
QUANTITIES		

PREPARED FOR THE
STATE OF CALIFORNIA
DEPARTMENT OF TRANSPORTATION

KAREN Y. WANG
PROJECT ENGINEER

BRIDGE NO
POST MILES 2.0

DESIGN DETAIL SHEET (ENGLISH) (REV. 03/14/12)

ORIGINAL SCALE IN INCHES FOR REDUCED PLANS 0 1 2 3

UNIT: 04
PROJECT NUMBER AND PHASE:
CONTRACT NO.: 0120F4

DISREGARD PRINTS BEARING EARLIER REVISION DATES

REVISION DATES

SHEET 32 OF 66

C:\Users\cschurr\Documents\56185_Gateway Park - Central_cschurr.rvt

DIST	COUNTY	ROUTE	POST MILES TOTAL PROJECT	SHEET No	TOTAL SHEETS
04	ALA	80	2.0	1204al	1204

REGISTERED ARCHITECT 03/27/13 DATE

LICENSED ARCHITECT GREGORY P. BAKER C-16884 10.31.2013 RENEWAL DATE STATE OF CALIFORNIA

03/27/13
PLANS APPROVAL DATE

The state of California or its officers or agents shall not be responsible for the accuracy or completeness of scanned copies of this plan sheet.

HNTB CORPORATION
1111 BROADWAY
9TH FLOOR
OAKLAND, CA 94607

HNTB Corporation Engineers Architects Planners

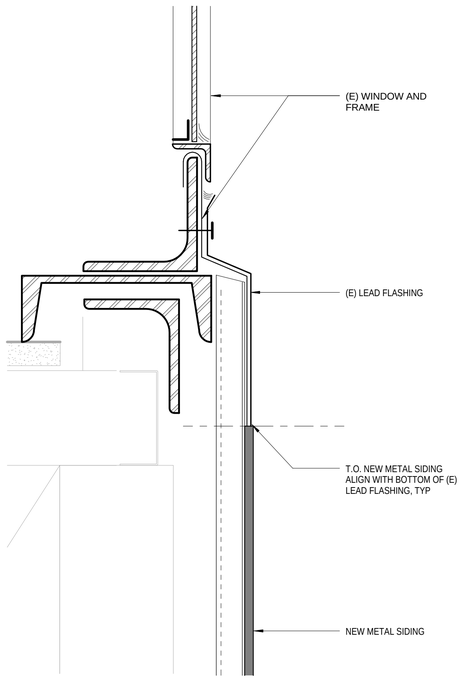

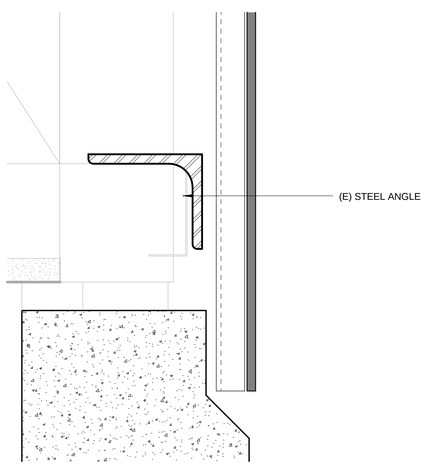

SECTION AT NEW METAL SIDING (7)
6" = 1'-0"

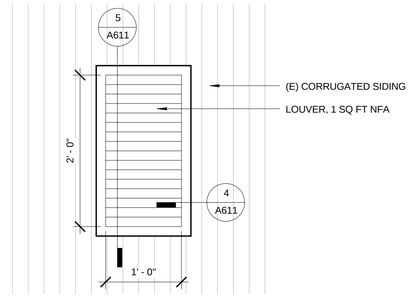

EAST LOUVER (6)
1" = 1'-0"

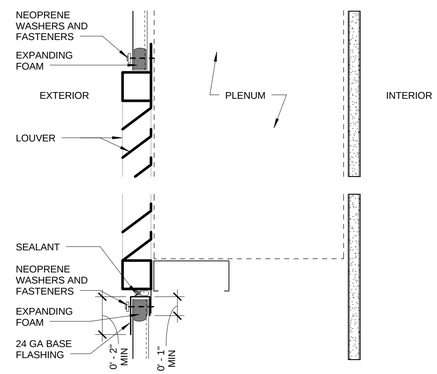

EAST LOUVER - HEAD (5)
3" = 1'-0"

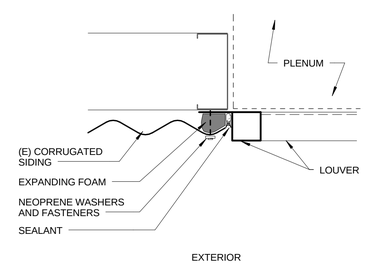

EAST LOUVER- JAMB (4)
3" = 1'-0"

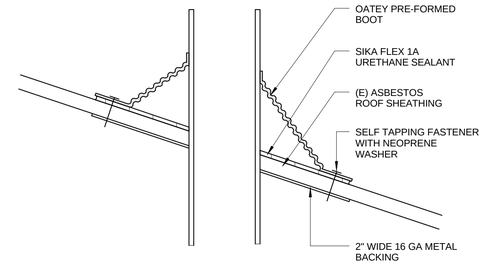

DETAIL AT PLUMBING VENT (3)
1 1/2" = 1'-0"

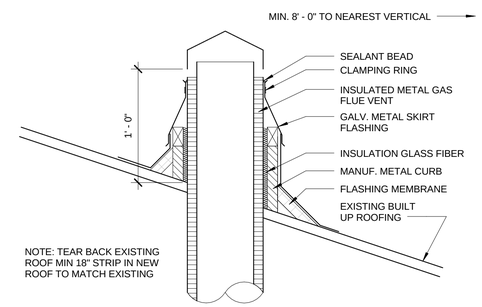

DETAIL AT FLUE (2)
1 1/2" = 1'-0"

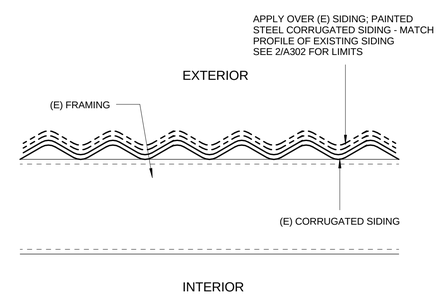

DETAIL AT NEW METAL SIDING (1)
3" = 1'-0"

05/03/13 PERMIT SET

5/2/2013 3:06:54 PM

SAN FRANCISCO OAKLAND BAY BRIDGE
EAST SPAN SEISMIC SAFETY PROJECT

IERBYS TEMPORARY IMPROVEMENTS - BUILDING

EXTERIOR DETAILS

SHEET A611

Quincy Wong
DESIGN OVERSIGHT
03/27/13
SIGN OFF DATE

	BY	CHECKED
DESIGN	COREY SCHURR	GREGORY BAKER
DETAILS	BY	CHECKED
QUANTITIES	BY	CHECKED

PREPARED FOR THE STATE OF CALIFORNIA DEPARTMENT OF TRANSPORTATION

KAREN Y. WANG
PROJECT ENGINEER

BRIDGE NO
POST MILES 2.0

DESIGN DETAIL SHEET (ENGLISH) (REV. 03/14/12)

ORIGINAL SCALE IN INCHES FOR REDUCED PLANS 0 1 2 3

UNIT: 04
PROJECT NUMBER AND PHASE:
CONTRACT NO.: 0120F4

DISREGARD PRINTS BEARING EARLIER REVISION DATES

REVISION DATES ___ ___ ___ ___

SHEET 33 OF 66

C:\Users\cschurr\Documents\56185_Gateway Park - Central_cschurr.rvt

DIST	COUNTY	ROUTE	POST MILES TOTAL PROJECT	SHEET No	TOTAL SHEETS
04	ALA	80	2.0	1204am	1204

REGISTERED ARCHITECT — DATE 03/27/13

PLANS APPROVAL DATE 03/27/13

LICENSED ARCHITECT — GREGORY P. BAKER — C-16884 — 10.31.2013 RENEWAL DATE — STATE OF CALIFORNIA

The state of California or its officers or agents shall not be responsible for the accuracy or completeness of scanned copies of this plan sheet.

HNTB CORPORATION
1111 BROADWAY
9TH FLOOR
OAKLAND, CA 94607

HNTB Corporation
Engineers Architects Planners

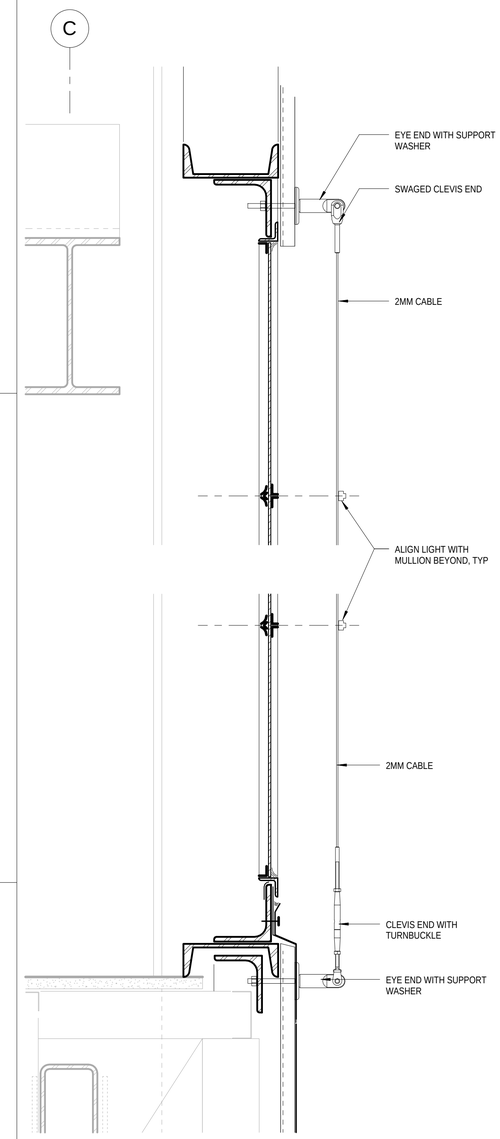

SIGNAGE MOUNTING DETAIL (1)
3" = 1'-0"

05/03/13 PERMIT SET

5/2/2013 3:07:01 PM

SAN FRANCISCO OAKLAND BAY BRIDGE
EAST SPAN SEISMIC SAFETY PROJECT

IERBYS TEMPORARY IMPROVEMENTS - BUILDING

EXTERIOR DETAILS

SHEET A612

Quincy Wong
DESIGN OVERSIGHT

03/27/13
SIGN OFF DATE

	BY	CHECKED
DESIGN	COREY SCHURR	GREGORY BAKER
DETAILS		
QUANTITIES		

PREPARED FOR THE
STATE OF CALIFORNIA
DEPARTMENT OF TRANSPORTATION

KAREN Y. WANG
PROJECT ENGINEER

BRIDGE NO
POST MILES 2.0

DESIGN DETAIL SHEET (ENGLISH) (REV. 03/14/12)

ORIGINAL SCALE IN INCHES FOR REDUCED PLANS 0 1 2 3

UNIT: 04
PROJECT NUMBER AND PHASE:
CONTRACT NO.: 0120F4

DISREGARD PRINTS BEARING EARLIER REVISION DATES

REVISION DATES ___ ___ ___ ___

SHEET 34 OF 66

C:\Users\cschurr\Documents\56185_Gateway Park - Central_cschurr.rvt

DIST	COUNTY	ROUTE	POST MILES TOTAL PROJECT	SHEET No	TOTAL SHEETS
04	ALA	80	2.0	1204an	1204

REGISTERED ARCHITECT — DATE 03/27/13

PLANS APPROVAL DATE 03/27/13

LICENSED ARCHITECT — GREGORY P. BAKER — C-16884 — 10.31.2013 RENEWAL DATE — STATE OF CALIFORNIA

The state of California or its officers or agents shall not be responsible for the accuracy or completeness of scanned copies of this plan sheet.

HNTB CORPORATION
1111 BROADWAY
9TH FLOOR
OAKLAND, CA 94607

HNTB Corporation Engineers Architects Planners

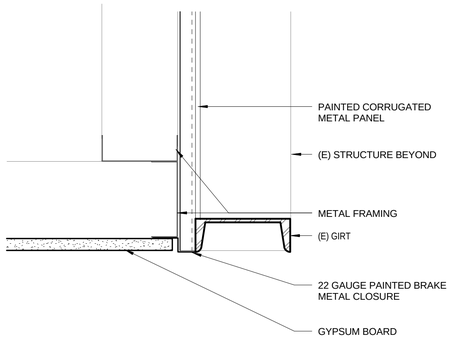

DETAIL AT TOP OF COVE (15)
3" = 1'-0"

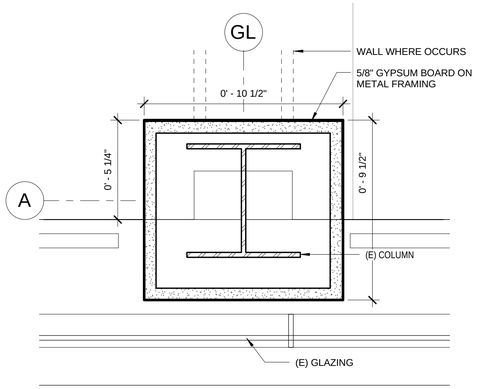

FURRED COLUMN (14)
3" = 1'-0"

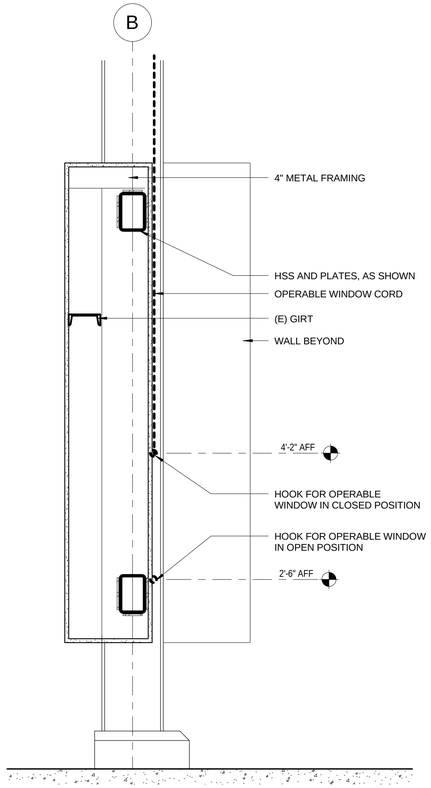

COLUMN ELEVATION (11)
1" = 1'-0"

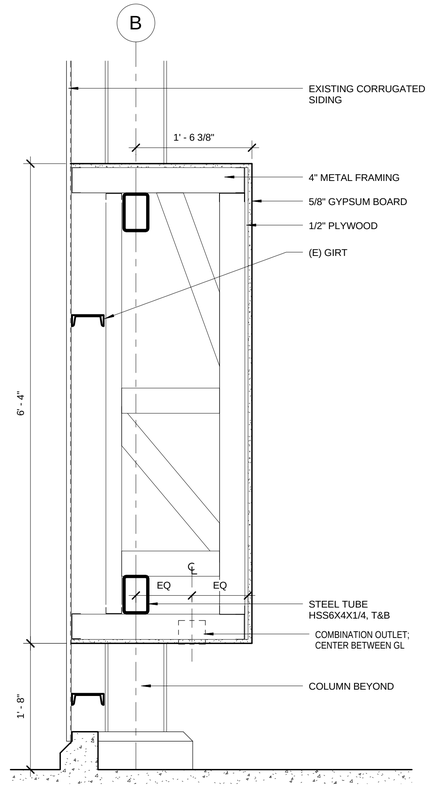

STORAGE SOUTH PARTITION WALL, GL 6-9 (8)
1" = 1'-0"

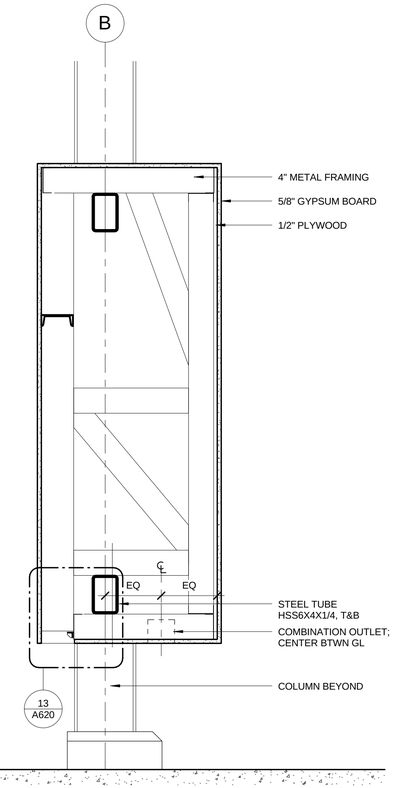

STORAGE SOUTH PARTITION WALL, GL 9-16 (5)
1" = 1'-0"

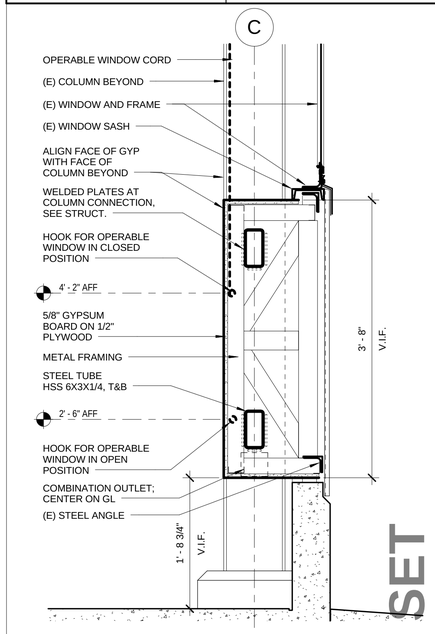

STORAGE NORTH PARTITION WALL (2)
1" = 1'-0"

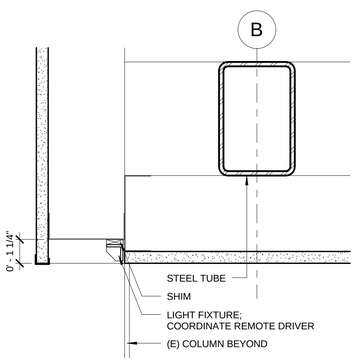

LIGHT FIXTURE CAVITY AT PARTITION WALL (13)
3" = 1'-0"

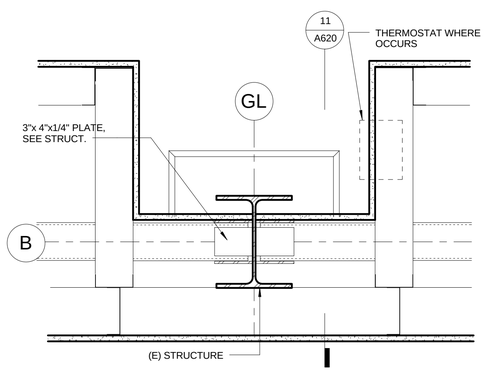

PARTITION WALL CONNECTION AT COLUMN (10)
1 1/2" = 1'-0"

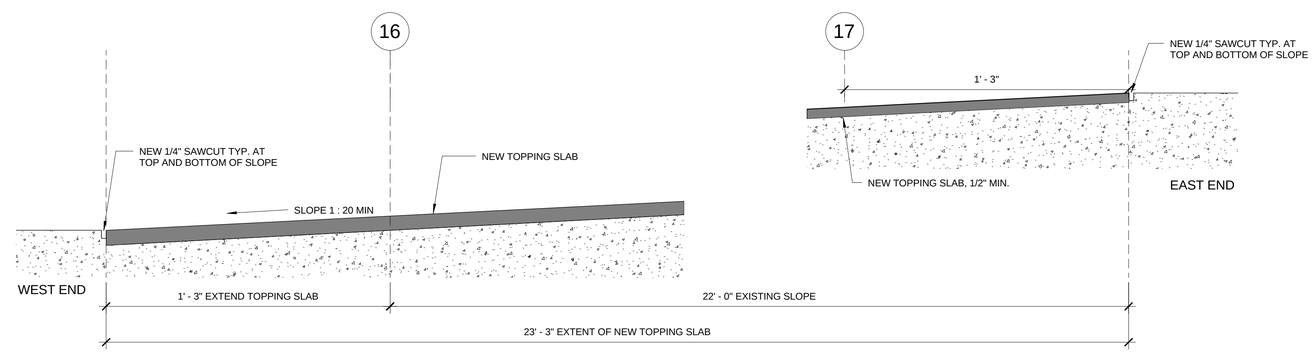

TOPPING SLAB AT SLOPED AREA (1)
3" = 1'-0"

05/03/13 PERMIT SET

5/2/2013 3:07:09 PM

SAN FRANCISCO OAKLAND BAY BRIDGE EAST SPAN SEISMIC SAFETY PROJECT

IERBYS TEMPORARY IMPROVEMENTS - BUILDING

INTERIOR DETAILS

SHEET A620

Quincy Wong — DESIGN OVERSIGHT
03/27/13 — SIGN OFF DATE

	BY	CHECKED
DESIGN	COREY SCHURR	GREGORY BAKER
DETAILS	BY	CHECKED
QUANTITIES	BY	CHECKED

PREPARED FOR THE STATE OF CALIFORNIA DEPARTMENT OF TRANSPORTATION

KAREN Y. WANG — PROJECT ENGINEER

BRIDGE NO — POST MILES 2.0

DESIGN DETAIL SHEET (ENGLISH) (REV. 03/14/12)

ORIGINAL SCALE IN INCHES FOR REDUCED PLANS 0 1 2 3

UNIT: 04
PROJECT NUMBER AND PHASE: CONTRACT NO.: 0120F4

DISREGARD PRINTS BEARING EARLIER REVISION DATES

REVISION DATES ___ ___ ___ ___

SHEET 35 OF 66

C:\Users\cschurr\Documents\56185_Gateway Park - Central_cschurr.rvt

DIST	COUNTY	ROUTE	POST MILES TOTAL PROJECT	SHEET No	TOTAL SHEETS
04	ALA	80	2.0	1204ao	1204

REGISTERED ARCHITECT 03/27/13 DATE

LICENSED ARCHITECT GREGORY P. BAKER C-16884 10.31.2013 RENEWAL DATE STATE OF CALIFORNIA

03/27/13
PLANS APPROVAL DATE

The state of California or its officers or agents shall not be responsible for the accuracy or completeness of scanned copies of this plan sheet.

HNTB CORPORATION
1111 BROADWAY
9TH FLOOR
OAKLAND, CA 94607

HNTB Corporation Engineers Architects Planners

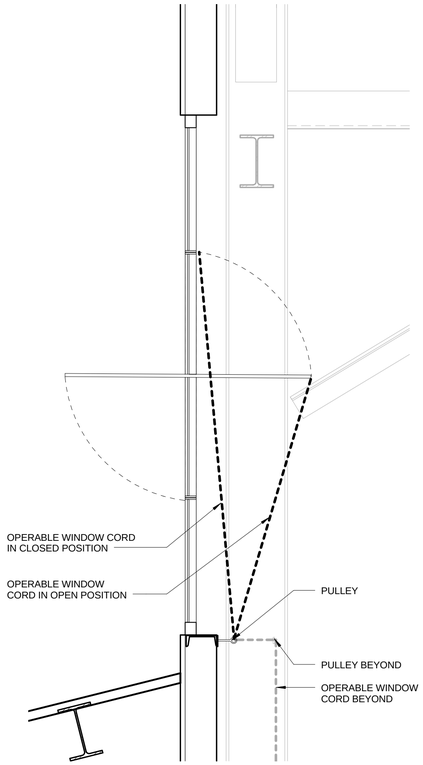

SECTION AT OPERABLE WINDOW (14)
1" = 1'-0"

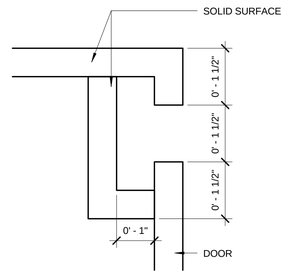

DOORS AT BASE CABINET (12)
6" = 1'-0"

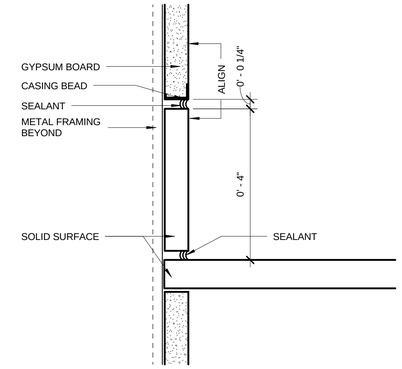

COUNTERTOP SPLASH AT BREAK AREA (9)
6" = 1'-0"

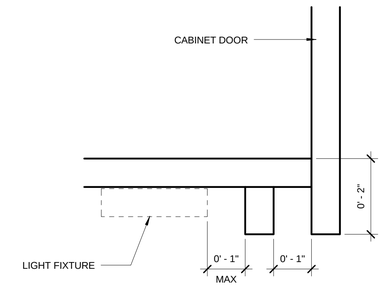

UPPER CABINET AT BREAK AREA (6)
6" = 1'-0"

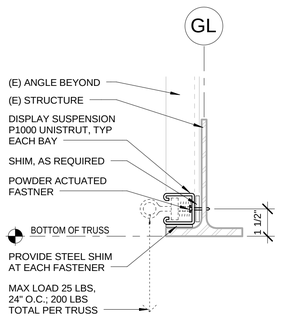

DISPLAY SUSPENSION - LOOKING NORTH (11)
3" = 1'-0"

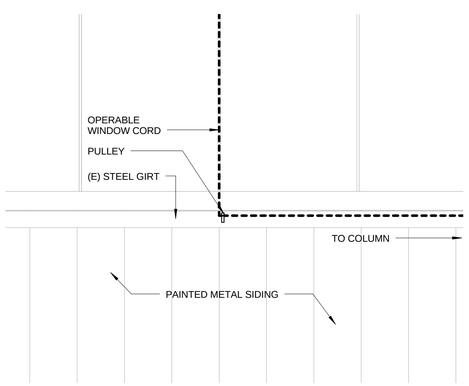

OPERABLE WINDOW AT SILL (13)
1 1/2" = 1'-0"

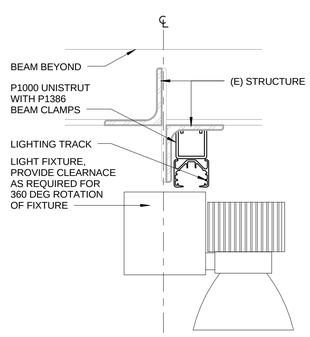

LIGHTING TRACK (10)
3" = 1'-0"

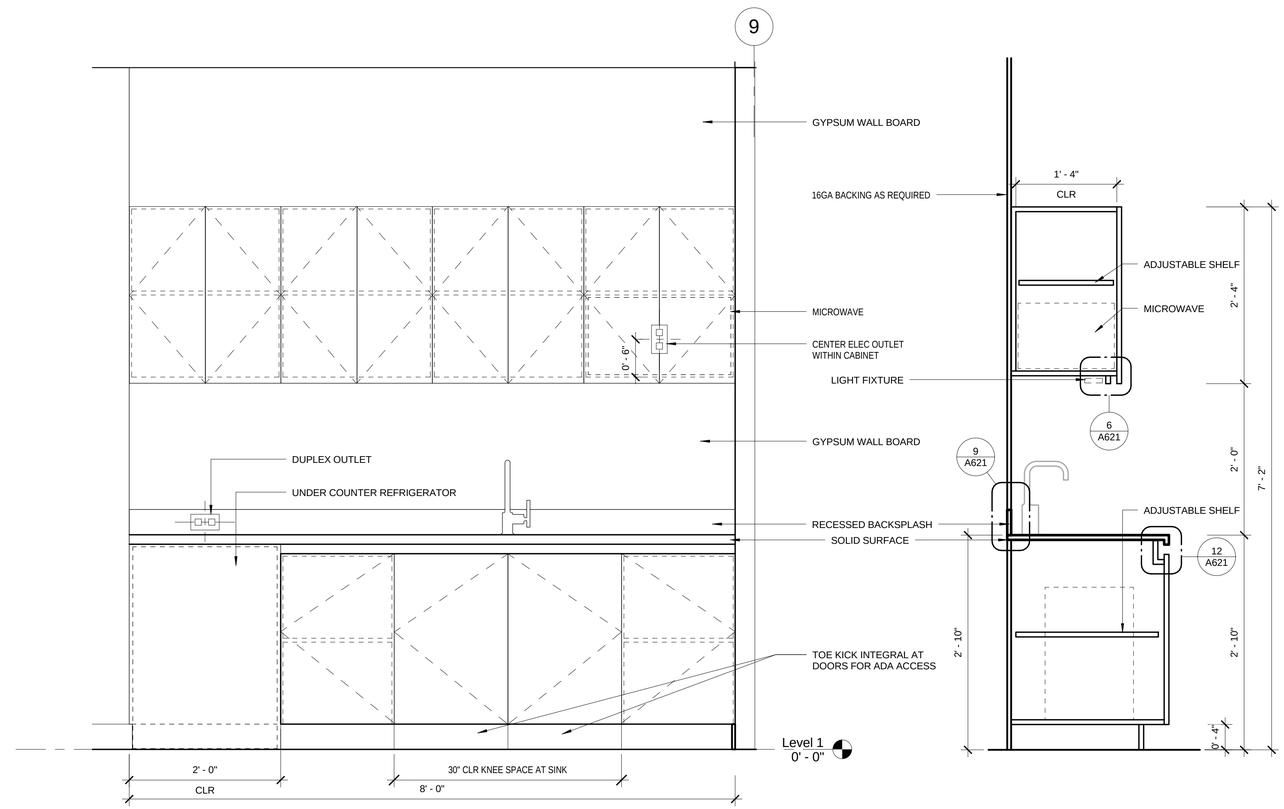

BREAK AREA CASEWORK (1)
1" = 1'-0"

05/03/13 PERMIT SET

5/2/2013 3:07:15 PM

SAN FRANCISCO OAKLAND BAY BRIDGE EAST SPAN SEISMIC SAFETY PROJECT

IERBYS TEMPORARY IMPROVEMENTS - BUILDING

INTERIOR DETAILS

SHEET A621

Quincy Wong
DESIGN OVERSIGHT

03/27/13
SIGN OFF DATE

	BY	CHECKED
DESIGN	COREY SCHURR	GREGORY BAKER
DETAILS	BY	CHECKED
QUANTITIES	BY	CHECKED

PREPARED FOR THE STATE OF CALIFORNIA DEPARTMENT OF TRANSPORTATION

KAREN Y. WANG
PROJECT ENGINEER

BRIDGE NO
POST MILES 2.0

DESIGN DETAIL SHEET (ENGLISH) (REV. 03/14/12)

ORIGINAL SCALE IN INCHES FOR REDUCED PLANS 0 1 2 3

UNIT: 04
PROJECT NUMBER AND PHASE:
CONTRACT NO.: 0120F4

DISREGARD PRINTS BEARING EARLIER REVISION DATES

REVISION DATES

SHEET 36 OF 66

C:\Users\cschurr\Documents\56185_Gateway Park - Central_cschurr.rvt

DIST	COUNTY	ROUTE	POST MILES TOTAL PROJECT	SHEET No	TOTAL SHEETS
04	ALA	80	2.0	1204ap	1204

REGISTERED ARCHITECT 03/27/13 DATE

LICENSED ARCHITECT GREGORY P. BAKER C-16884 10.31.2013 RENEWAL DATE STATE OF CALIFORNIA

03/27/13
PLANS APPROVAL DATE

The state of California or its officers or agents shall not be responsible for the accuracy or completeness of scanned copies of this plan sheet.

HNTB CORPORATION
1111 BROADWAY
9TH FLOOR
OAKLAND, CA 94607

HNTB Corporation Engineers Architects Planners

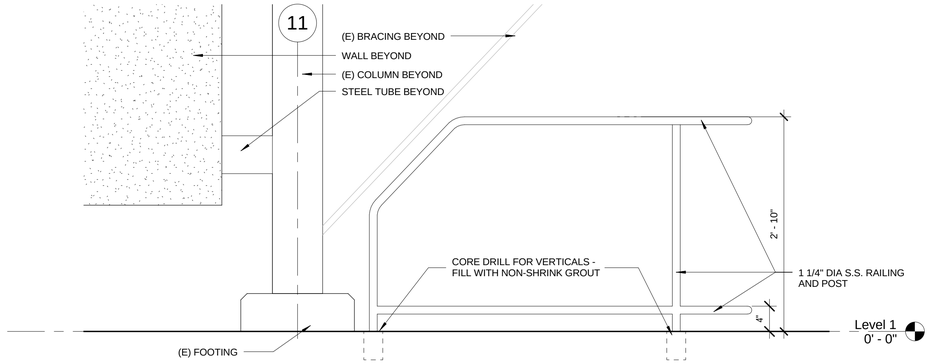

ADA RAILING - ELEVATION 6
1" = 1'-0"

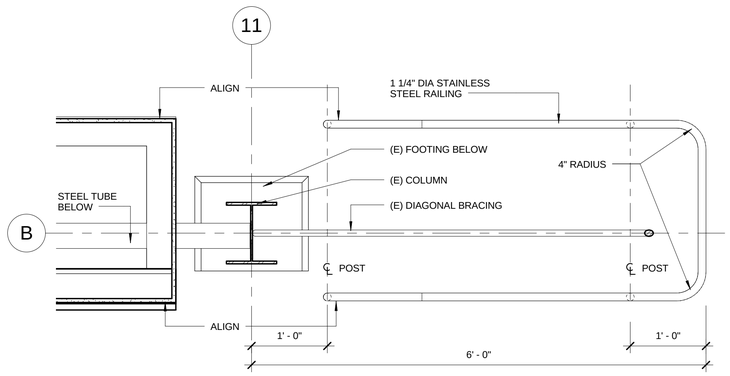

ADA RAILING - PLAN 5
1" = 1'-0"

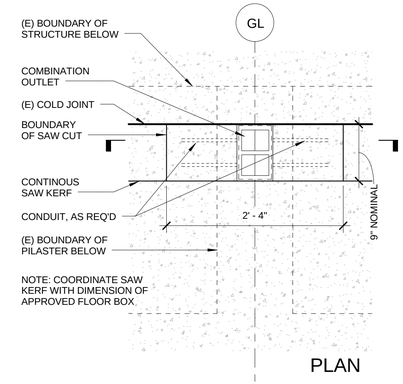

PLAN

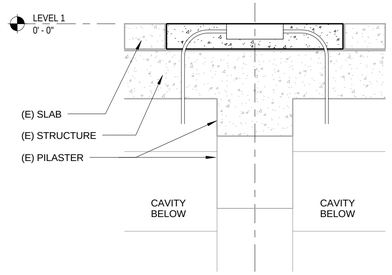

SECTION

NOTE: SEE STRUCT FOR NOTES REGARDING REBAR CLEARANCE AND INFILL CONCRETE.

COMBINATION FLOOR BOXES 2
1" = 1'-0"

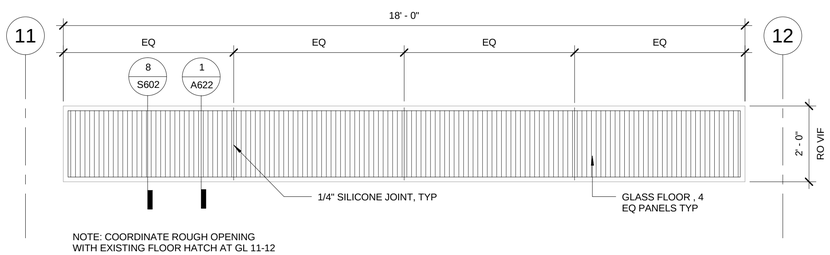

ENLARGED GLASS FLOOR 4
1/2" = 1'-0"

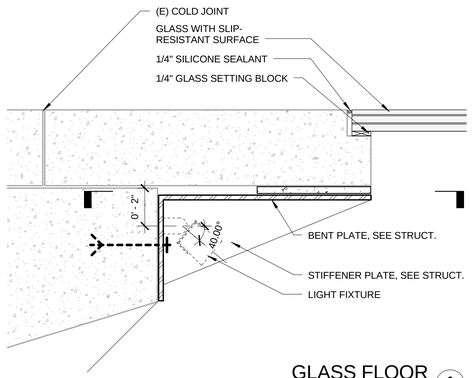

GLASS FLOOR 1
3" = 1'-0"

05/03/13 PERMIT SET

5/2/2013 3:07:22 PM

SAN FRANCISCO OAKLAND BAY BRIDGE
EAST SPAN SEISMIC SAFETY PROJECT

IERBYS TEMPORARY IMPROVEMENTS - BUILDING

INTERIOR DETAILS

SHEET A622

Quincy Wong
DESIGN OVERSIGHT
03/27/13
SIGN OFF DATE

	BY	CHECKED
DESIGN	COREY SCHURR	GREGORY BAKER
DETAILS		
QUANTITIES		

PREPARED FOR THE STATE OF CALIFORNIA DEPARTMENT OF TRANSPORTATION

KAREN Y. WANG
PROJECT ENGINEER

BRIDGE NO
POST MILES 2.0

DESIGN DETAIL SHEET (ENGLISH) (REV. 03/14/12)

ORIGINAL SCALE IN INCHES FOR REDUCED PLANS 0 1 2 3

UNIT: 04
PROJECT NUMBER AND PHASE:
CONTRACT NO.: 0120F4

DISREGARD PRINTS BEARING EARLIER REVISION DATES

REVISION DATES ___ ___ ___ ___

SHEET 37 OF 66

C:\Users\cschurr\Documents\56185_Gateway Park - Central_cschurr.rvt

DIST	COUNTY	ROUTE	POST MILES TOTAL PROJECT	SHEET No	TOTAL SHEETS
04	ALA	80	2.0	1204aq	1204

REGISTERED ARCHITECT — DATE 03/27/13

PLANS APPROVAL DATE 03/27/13

LICENSED ARCHITECT — GREGORY P. BAKER — C-16884 — 10.31.2013 RENEWAL DATE — STATE OF CALIFORNIA

The state of California or its officers or agents shall not be responsible for the accuracy or completeness of scanned copies of this plan sheet.

HNTB CORPORATION
1111 BROADWAY
9TH FLOOR
OAKLAND, CA 94607

HNTB Corporation
Engineers Architects Planners

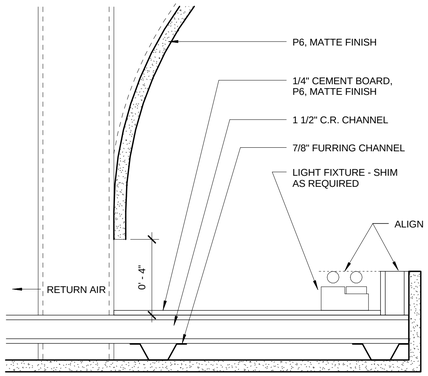

LIGHT COVE AT CORRIDOR (12)
3" = 1'-0"

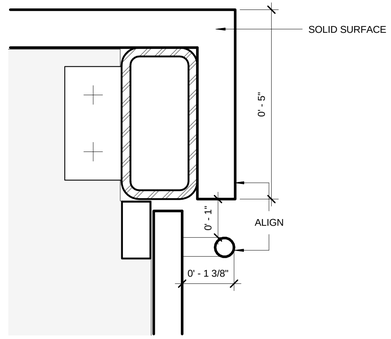

CABINET PULL AT RESTROOM (9)
6" = 1'-0"

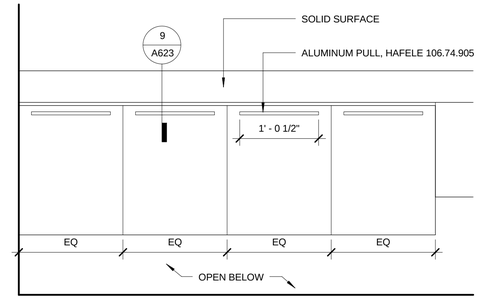

CABINET ELEVATION IN RESTROOM (6)
1" = 1'-0"

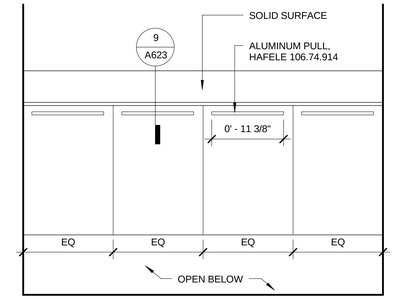

CABINET ELEVATION IN ACCESSIBLE STALL (3)
1" = 1'-0"

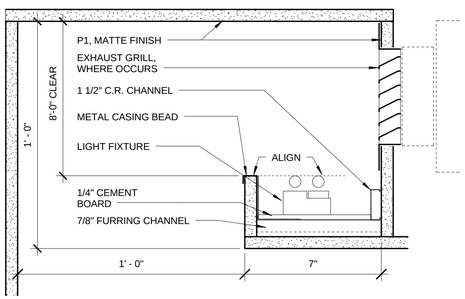

LIGHT COVE AT RESTROOM (11)
3" = 1'-0"

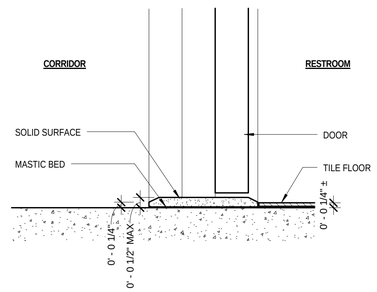

DOOR SILL AT THRESHOLD (8)
3" = 1'-0"

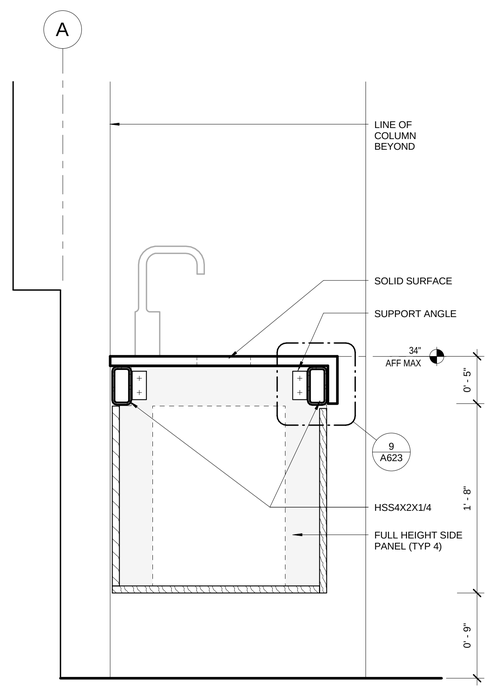

NOTE: SEE STRUCT FOR TUBE CONNECTION DETAILS AT WALL.

RESTROOM CASEWORK (4)
1 1/2" = 1'-0"

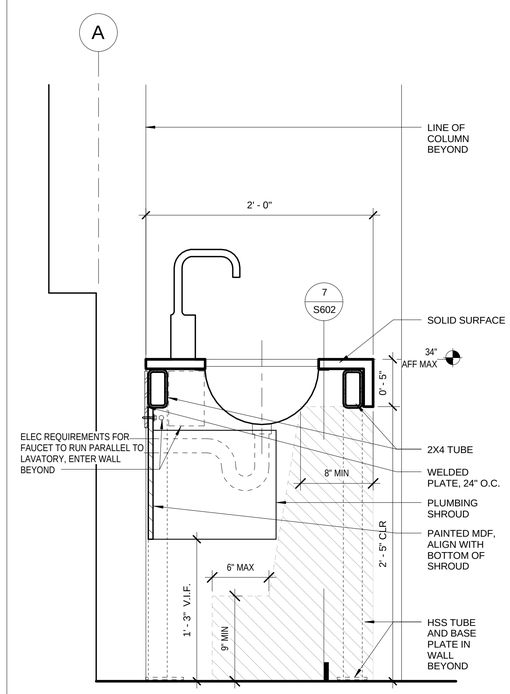

NOTE: SEE STRUCT FOR TUBE CONNECTION DETAILS AT WALL.

RESTROOM COUNTERTOP (1)
1 1/2" = 1'-0"

05/03/13 PERMIT SET

5/2/2013 5:44:31 PM

SAN FRANCISCO OAKLAND BAY BRIDGE
EAST SPAN SEISMIC SAFETY PROJECT

Quincy Wong
DESIGN OVERSIGHT
03/27/13
SIGN OFF DATE

	BY	CHECKED
DESIGN	COREY SCHURR	GREGORY BAKER
DETAILS		
QUANTITIES		

PREPARED FOR THE
STATE OF CALIFORNIA
DEPARTMENT OF TRANSPORTATION

KAREN Y. WANG
PROJECT ENGINEER

BRIDGE NO
POST MILES 2.0

IERBYS TEMPORARY IMPROVEMENTS - BUILDING
INTERIOR DETAILS

SHEET A623

DESIGN DETAIL SHEET (ENGLISH) (REV. 03/14/12)

ORIGINAL SCALE IN INCHES FOR REDUCED PLANS 0 1 2 3

UNIT: 04
PROJECT NUMBER AND PHASE:
CONTRACT NO.: 0120F4

DISREGARD PRINTS BEARING EARLIER REVISION DATES

REVISION DATES ___ ___ ___ ___

SHEET 38 OF 66

C:\Users\cschurr\Documents\56185_Gateway Park - Central_cschurr.rvt

DIST	COUNTY	ROUTE	POST MILES TOTAL PROJECT	SHEET No	TOTAL SHEETS
04	ALA	80	2.0	1204ar	1204

REGISTERED ARCHITECT 03/27/13 DATE

LICENSED ARCHITECT GREGORY P. BAKER C-16884 10.31.2013 RENEWAL DATE STATE OF CALIFORNIA

03/27/13
PLANS APPROVAL DATE

The state of California or its officers or agents shall not be responsible for the accuracy or completeness of scanned copies of this plan sheet.

HNTB CORPORATION
1111 BROADWAY
9TH FLOOR
OAKLAND, CA 94607

HNTB Corporation
Engineers Architects Planners

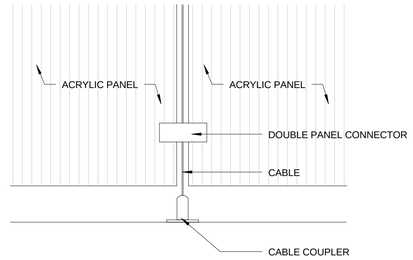

CONNECTION AT ACRYLIC PANEL (6)
3" = 1'-0"

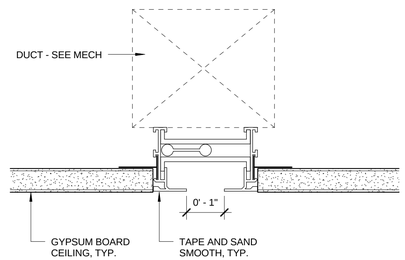

LINEAR DIFFUSER (5)
6" = 1'-0"

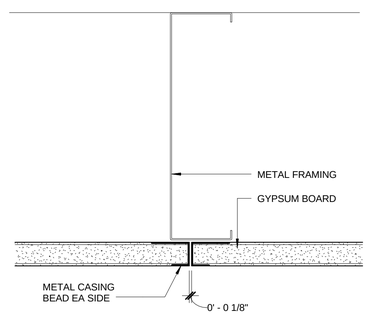

DETAIL AT REVEAL (4)
6" = 1'-0"

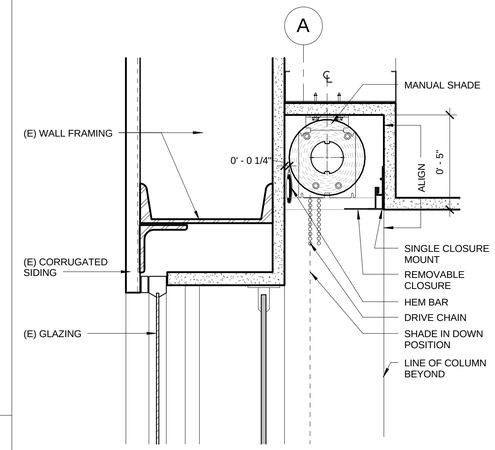

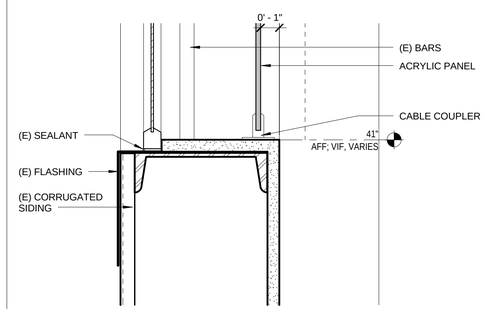

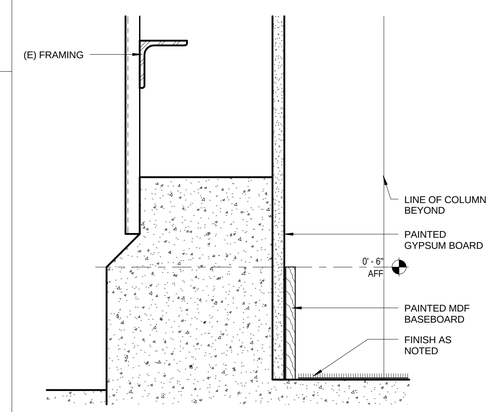

WALL SECTION AT LOW BAY (1)
3" = 1'-0"

05/03/13 PERMIT SET

5/2/2013 3:07:35 PM

Quincy Wong
DESIGN OVERSIGHT
03/27/13
SIGN OFF DATE

	BY	CHECKED
DESIGN	COREY SCHURR	GREGORY BAKER
DETAILS	BY	CHECKED
QUANTITIES	BY	CHECKED

PREPARED FOR THE
STATE OF CALIFORNIA
DEPARTMENT OF TRANSPORTATION

KAREN Y. WANG
PROJECT ENGINEER

BRIDGE NO
POST MILES 2.0

SAN FRANCISCO OAKLAND BAY BRIDGE
EAST SPAN SEISMIC SAFETY PROJECT

IERBYS TEMPORARY IMPROVEMENTS - BUILDING

INTERIOR DETAILS

SHEET A624

DESIGN DETAIL SHEET (ENGLISH) (REV. 03/14/12)

ORIGINAL SCALE IN INCHES FOR REDUCED PLANS 0 1 2 3

UNIT: 04
PROJECT NUMBER AND PHASE: CONTRACT NO.: 0120F4

DISREGARD PRINTS BEARING EARLIER REVISION DATES

REVISION DATES				SHEET	OF
___	___	___	___	39	66

C:\Users\cschurr\Documents\56185_Gateway Park - Central_cschurr.rvt

DIST	COUNTY	ROUTE	POST MILES TOTAL PROJECT	SHEET No	TOTAL SHEETS
04	ALA	80	2.0		1204

Rene Vignos 03/27/13
DATE

PLANS APPROVAL DATE

REGISTERED PROFESSIONAL ENGINEER RENE P VIGNOS No. S4463 Exp. 12/31/14 STRUCTURAL STATE OF CALIFORNIA

The state of California or its officers or agents shall not be responsible for the accuracy or completeness of scanned copies of this plan sheet.

FORELL/ ELSESSER
Forell/Elsesser Engineers
160 Pine Street, Suite 600
San Francisco, CA 94111

NOTE:
INFORMATION ON THIS SHEET IS FOR STRUCTURAL REFERENCE ONLY. ALL INFORMATION RELATING TO FINISHES, ASSEMBLIES, AND NON-STRUCTURAL MATERIALS SHOULD BE REFERENCED FROM ARCHITECTURAL DRAWINGS.

GENERAL WELDING NOTES
1. GRIND ALL WELDS SMOOTH
2. REMOVE AND GRIND ALL WELDING AIDS
3. REMOVE AND GRIND ALL ERECTION AIDS

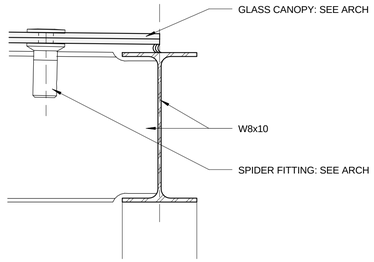

CONNECTION AT EDGE (12)
3" = 1'-0"

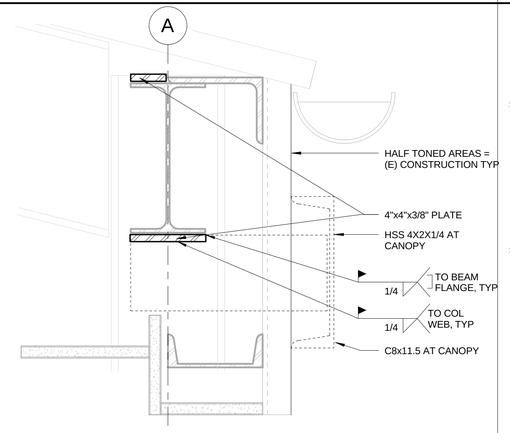

EXISTING BEAM CONNECTION AT COLUMN (9)
3" = 1'-0"

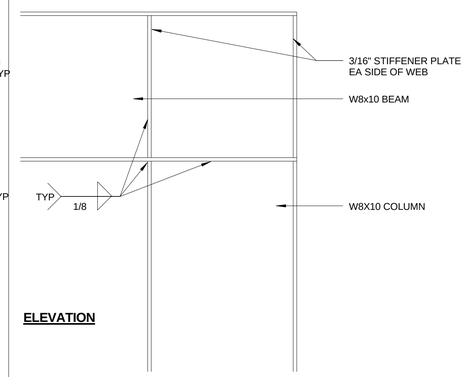

ELEVATION

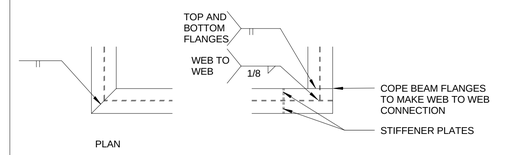

CONNECTION - PLAN (3)
1" = 1'-0"

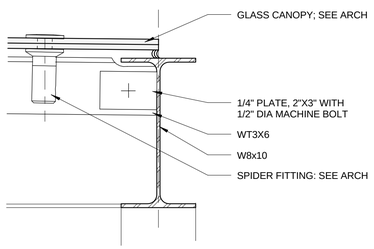

CONNECTION FACING EAST (11)
3" = 1'-0"

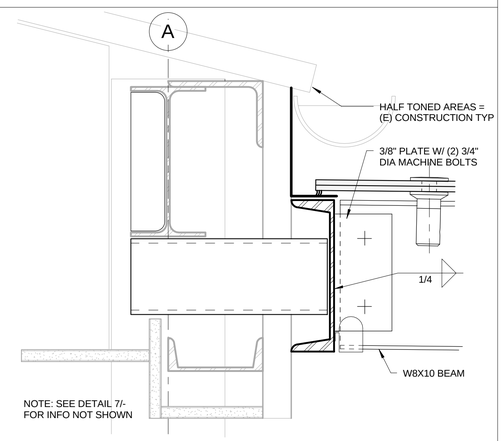

CONNECTION AT EDGE (8)
3" = 1'-0"

SECTION

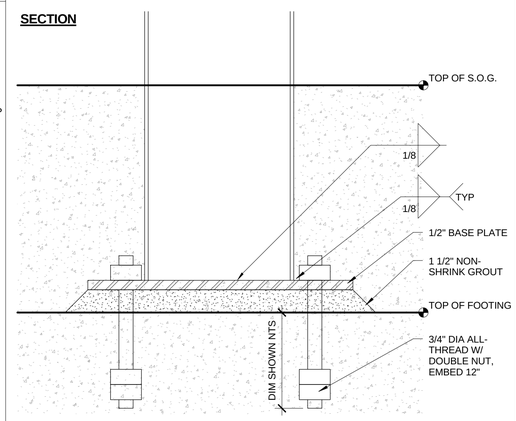

CONNECTION AT COLUMN (5)
3" = 1'-0"

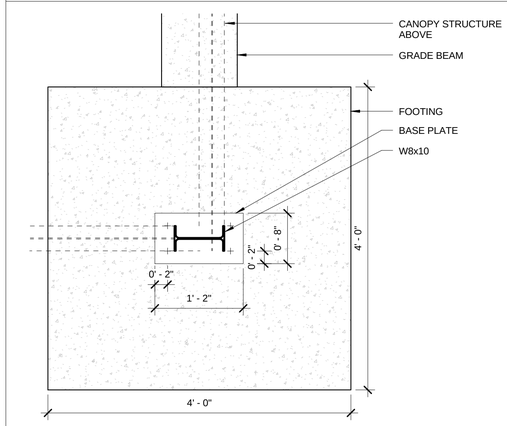

COLUMN FOOTING AT CANOPY (2)
1" = 1'-0"

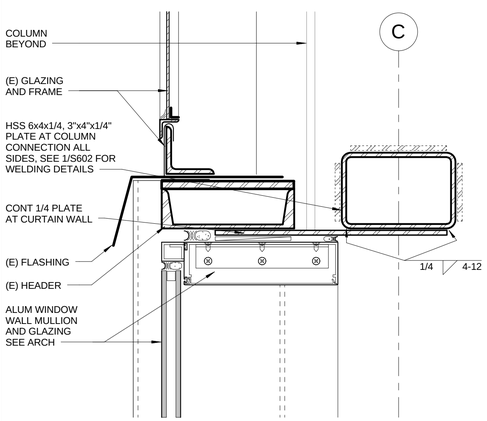

NORTH INFILL GLAZING AT HEAD (10)
3" = 1'-0"

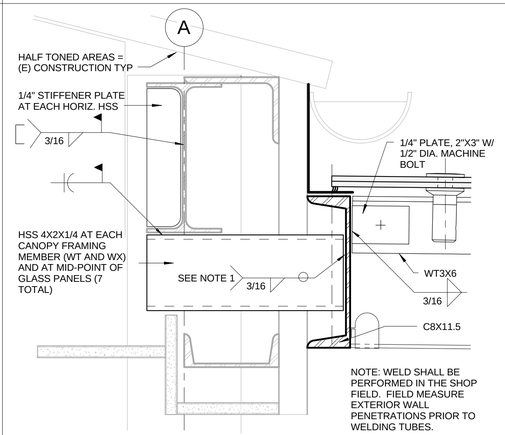

CONNECTION FACING EAST (7)
3" = 1'-0"

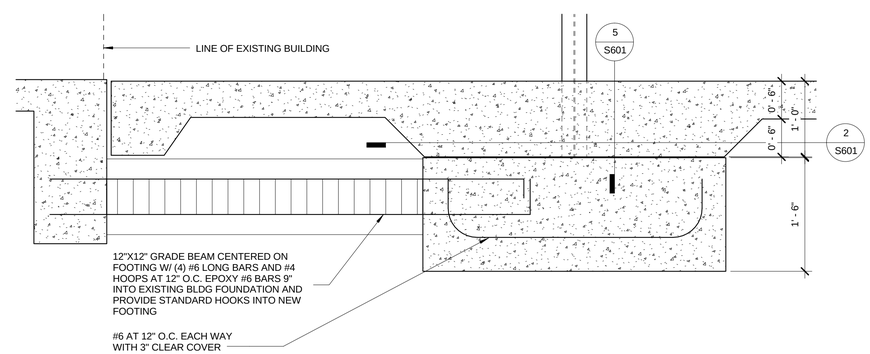

COLUMN FOOTING AT CANOPY (1)
1" = 1'-0"

05/03/13 PERMIT SET

3/27/2013 5:02:57 PM

Edgardo Isidro
DESIGN OVERSIGHT
03/27/13
SIGN OFF DATE

	BY	CHECKED
DESIGN	CHRIS PETTEYS	RENE VIGNOS
DETAILS	BY	CHECKED
QUANTITIES	BY	CHECKED

PREPARED FOR THE
STATE OF CALIFORNIA
DEPARTMENT OF TRANSPORTATION

KAREN Y. WANG
PROJECT ENGINEER

BRIDGE NO
POST MILES 2.0

SAN FRANCISCO OAKLAND BAY BRIDGE
EAST SPAN SEISMIC SAFETY PROJECT

IERBYS TEMPORARY IMPROVEMENTS - BUILDING

STRUCTURAL DETAILS

SHEET S601

DESIGN DETAIL SHEET (ENGLISH) (REV. 03/14/12)

ORIGINAL SCALE IN INCHES FOR REDUCED PLANS 0 1 2 3

UNIT: 04
PROJECT NUMBER AND PHASE:
CONTRACT NO.: 0120F4

DISREGARD PRINTS BEARING EARLIER REVISION DATES

REVISION DATES

SHEET 40 OF 66

C:\Users\cschurr\Documents\56185_Gateway Park - Central_cschurr.rvt

DIST	COUNTY	ROUTE	POST MILES TOTAL PROJECT	SHEET No	TOTAL SHEETS
04	ALA	80	2.0		1204

Rene Vignos 03/27/13
DATE

PLANS APPROVAL DATE

REGISTERED PROFESSIONAL ENGINEER RENE P VIGNOS No. S4464 Exp. 12/31/14 STRUCTURAL STATE OF CALIFORNIA

The state of California or its officers or agents shall not be responsible for the accuracy or completeness of scanned copies of this plan sheet.

FORELL/ ELSESSER
Forell/Elsesser Engineers
160 Pine Street, Suite 600
San Francisco, CA 94111

NOTE:
INFORMATION ON THIS SHEET IS FOR STRUCTURAL REFERENCE ONLY. ALL INFORMATION RELATING TO FINISHES, ASSEMBLIES, AND NON-STRUCTURAL MATERIALS SHOULD BE REFERENCED FROM ARCHITECTURAL DRAWINGS.

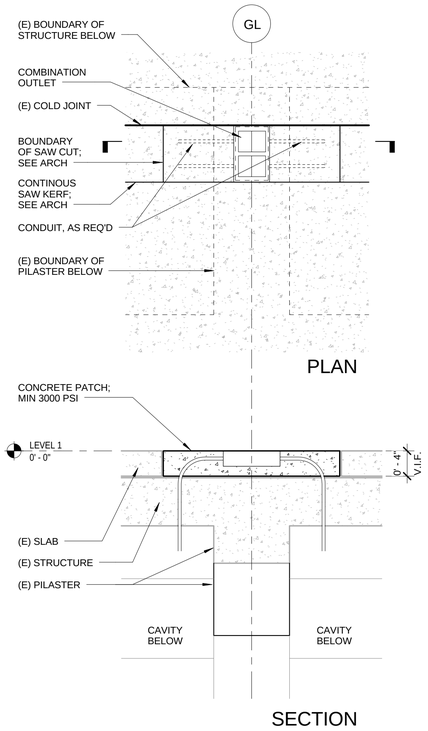

NOTE: ALL EXISTING REINFORCEMENT TO BE LOCATED AND AVOIDED PRIOR TO DRILLING THROUGH THICKENED/TAPERED SLAB. REINFORCEMENT TO BE CUT ONLY WHEN INTERRUPTED BY COMBINATION BOX. ALL REINFORCEMENT OTHERWISE TO REMAIN IN TACT.

COMBINATION FLOOR BOXES (11)
1" = 1'-0"

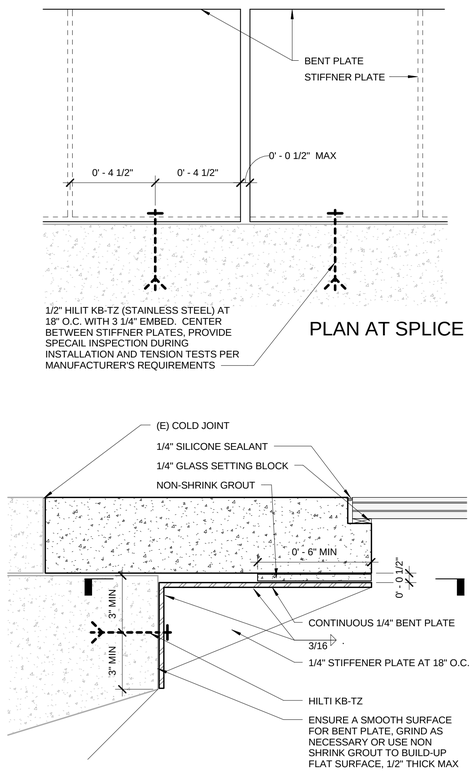

NOTE: STEEL BRACKETS OR SHORING SHALL BE IN-PLACE PRIOR TO CUTTING SLAB FOR GLASS FLOOR OPENING.

GLASS FLOOR (8)
3" = 1'-0"

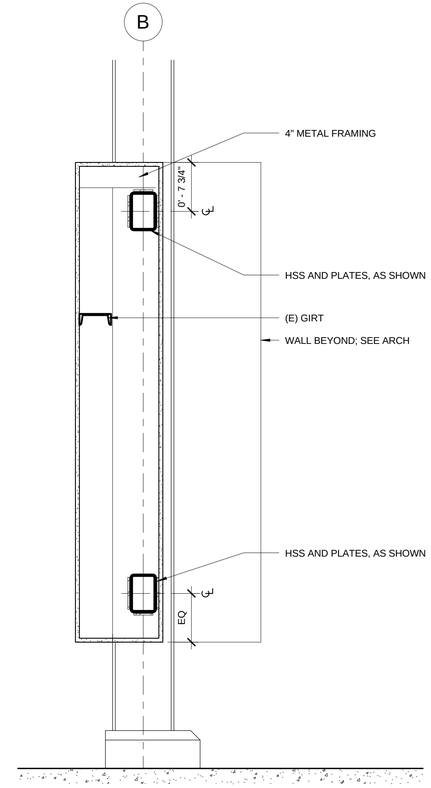

COLUMN ELEVATION AT PARTITION (5)
1" = 1'-0"

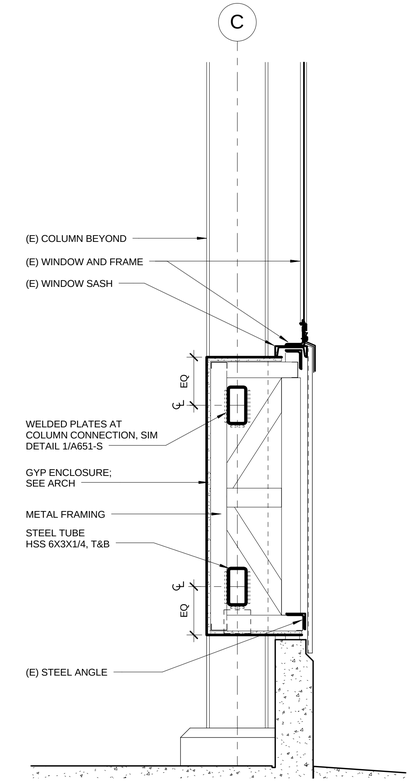

STORAGE NORTH PARTITION WALL (2)
1" = 1'-0"

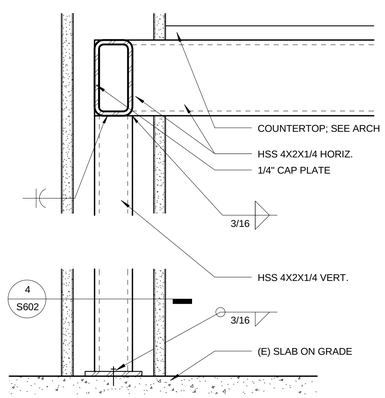

SECTION AT STEEL TUBE (10)
3" = 1'-0"

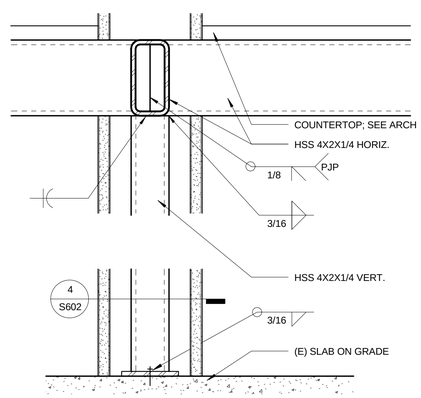

SECTION AT STEEL TUBE (7)
3" = 1'-0"

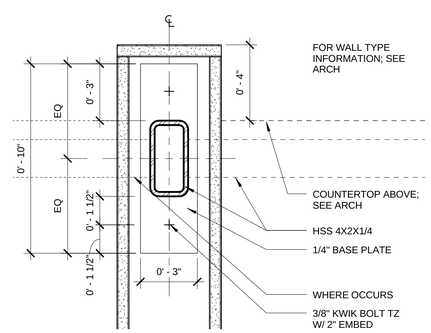

PLAN DETAIL AT STEEL TUBE (4)
3" = 1'-0"

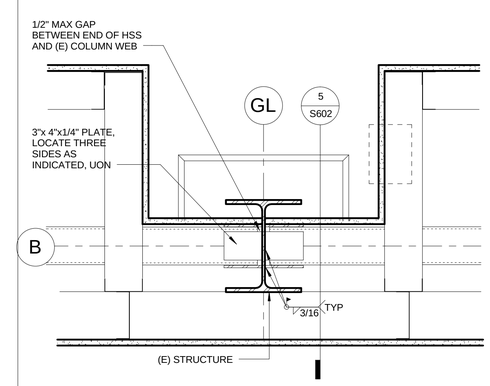

PARTITION AT COLUMN (1)
1 1/2" = 1'-0"

05/03/13 PERMIT SET

3/27/2013 5:04:10 PM

Edgardo Isidro
DESIGN OVERSIGHT
03/27/13
SIGN OFF DATE

	BY	CHECKED
DESIGN	CHRIS PETTEYS	RENE VIGNOS
DETAILS	BY	CHECKED
QUANTITIES	BY	CHECKED

PREPARED FOR THE
STATE OF CALIFORNIA
DEPARTMENT OF TRANSPORTATION

KAREN Y. WANG
PROJECT ENGINEER

BRIDGE NO
POST MILES 2.0

SAN FRANCISCO OAKLAND BAY BRIDGE
EAST SPAN SEISMIC SAFETY PROJECT

IERBYS TEMPORARY IMPROVEMENTS - BUILDING

STRUCTURAL DETAILS

SHEET S602

DESIGN DETAIL SHEET (ENGLISH) (REV. 03/14/12)

ORIGINAL SCALE IN INCHES FOR REDUCED PLANS 0 1 2 3

UNIT: 04
PROJECT NUMBER AND PHASE: CONTRACT NO.: 0120F4

DISREGARD PRINTS BEARING EARLIER REVISION DATES

REVISION DATES ___ ___ ___ ___

SHEET 41 OF 66

C:\Users\cschurr\Documents\56185_Gateway Park - Central_cschurr.rvt

DIST	COUNTY	ROUTE	POST MILES TOTAL PROJECT	SHEET No	TOTAL SHEETS
04	ALA	80	2.0	1204au	1204

JRGK
REGISTERED ENGINEER

03/27/13
DATE

REGISTERED PROFESSIONAL ENGINEER JAMES R. GRONEK No. M 34898 MECHANICAL STATE OF CALIFORNIA

PLANS APPROVAL DATE

The state of California or its officers or agents shall not be responsible for the accuracy or completeness of scanned copies of this plan sheet.

WSP • FLACK + KURTZ
405 HOWARD ST. #500
SAN FRANCISCO, CA 94106

MECHANICAL LEGEND AND ABBREVIATIONS

ABBREVIATIONS – MECHANICAL

ABV	ABOVE
ACD	AUTOMATIC CONTROL DAMPER
AD	ACCESS DOOR
AL	ACOUSTICAL LINING
ARCH	ARCHITECTURAL
ATC	AUTOMATIC TEMPERATURE CONTROL
BD	BALANCING DAMPER
BDD	BACK DRAFT DAMPER
BO	BLANK OFF
BHP	BRAKE HORSE POWER
BTU	BRITISH THERMAL UNIT
CC	COOLING COIL
CD	CEILING DIFFUSER
CFF	CAP FOR FUTURE
CFM	CUBIC FEET PER MINUTE
CG	CEILING GRILLE
CO	CLEAN OUT
COMP	COMPRESSOR
CR	CEILING REGISTER
CU	CONDENSING UNIT
DB	DRY BULB
DIA	DIAMETER
DN	DOWN
DX	DIRECT EXPANSION
(E)	EXISTING TO REMAIN
EA	EXHAUST AIR
EAT	ENTERING AIR TEMPERATURE
EDB	ENTERING DRY BULB
EF	EXHAUST FAN
EFF	EFFICIENCY
EWB	ENTERING WET BULB
EWT	ENTERING WATER TEMPERATURE
°F	DEGREES FAHRENHEIT
F	FILTER
FC	FLEXIBLE CONNECTION (DUCT OR PIPE)
FCU	FAN COIL UNIT
FD	FUSIBLE LINK FIRE DAMPER W/ DUCT ACCESS DOOR
FLR	FLOOR
FLA	FULL LOAD AMPS
FPI	FINS PER INCH
FSD	COMBINATION FIRE AND SMOKE DAMPER
FT	FEET
GPM	GALLONS PER MINUTE
GX	GENERAL EXHAUST
HC	HEATING COIL
HTP	HEAT PUMP
HP	HORSE POWER
HR	HOUR
ID	INSIDE DIMENSION
KW	KILOWATT
KWH	KILOWATT HOURS
LAT	LEAVING AIR TEMPERATURE
LBS	POUNDS
LD	LINEAR DIFFUSER (CEILING, WALL, SILL OR FLOOR)
LRA	LOCK ROTOR AMPS
LWS	LOUVER WITH WIRE SCREEN

ABBREVIATIONS – MECHANICAL

LWT	LEAVING WATER TEMPERATURE
MAT	MIXED AIR TEMPERATURE
MAX	MAXIMUM
MBH	THOUSAND BTU PER HOUR
MFG	MANUFACTURER
MFS	MAXIMUM FUSE SIZE
MIN	MINIMUM
MOCP	MAXIMUM OVERCURRENT PROTECTION
(N)	NEW
NC	NORMALLY CLOSED
NFA	NET FREE AREA
NIC	NOT IN THIS CONTRACT
NK	NECK
NO	NORMALLY OPEN
NTS	NOT TO SCALE
OAI	OUTSIDE AIR INTAKE
OBD	OPPOSED BLADE DAMPER
OD	OUTSIDE DIMENSION
P	PUMP
PD	PRESSURE DROP
PRV	PRESSURE REDUCING VALVE
PSI	POUNDS PER SQUARE INCH (GAUGE)
PSIA	POUNDS PER SQUARE INCH ABSOLUTE
(R)	EXISTING TO BE RELOCATED
RA	RETURN AIR
RF	RETURN FAN
RH	RELATIVE HUMIDITY
RHC	REHEAT COIL
RPM	REVOLUTIONS PER MINUTE
SA	SUPPLY AIR
SAD	SEE ARCHITECTURAL DRAWINGS
SD	SMOKE DAMPER
SF	SUPPLY FAN
SED	SEE ELECTRICAL DRAWINGS
SENS	SENSIBLE
SM	SHEET METAL
SP	STATIC PRESSURE
SQFT	SQUARE FEET
TF	TRANSFER FAN
TRG	TRANSFER GRILLE
TX	TOILET EXHAUST
TYP	TYPICAL
UH	UNIT HEATER
UON	UNLESS OTHERWISE NOTED
VAR	VARIABLE
VAV	VARIABLE AIR VOLUME
VD	VOLUME DAMPER
VFD	VARIABLE FREQUENCY DRIVE
VRV	VARIABLE REFRIGERANT VOLUME
W/	WITH
WB	WET BULB
WG	WATER GAUGE
WMS	WIRE MESH SCREEN
WO–SIZE	WALL OPENING – [SIZE]
(X)	EXISTING TO BE DEMOLISHED
(300)	CUBIC FEET OR AIR PER MINUTE OR GALLONS PER MINUTE

PIPING LEGEND (CONTINUED)

RS	REFRIGERANT SUCTION PIPING
RL	REFRIGERANT LIQUID PIPING
	ARROW INDICATES DIRECTION OF FLOW
	PITCH PIPE DOWN IN DIRECTION OF ARROW
D	DRAIN LINE
	PIPE ANCHOR
	PIPE GUIDE
	FLEXIBLE BALL JOINT EXPANSION COMPENSATOR
	CONCENTRIC REDUCER (INCREASER)
	ECCENTRIC REDUCER (INCREASER)
	UNION
	CAPPED PIPE WITH SHUT–OFF VALVE
	"Y" TYPE STRAINER WITH HOSE END BLOW OFF VALVE
	"Y" TYPE STRAINER
	BASKET TYPE STRAINER
	DUPLEX STRAINER
	ELBOW TURNED UP
	ELBOW TURNED DOWN
	BOTTOM PIPE CONNECTION
	TOP PIPE CONNECTION
	SLOPED CHANGE IN PIPE ELEVATION
	FLEXIBLE CONNECTION
	SHUT–OFF VALVE
	AUTOMATIC FLOW CONTROL VALVE
	CALIBRATED BALANCE VALVE

PIPING LEGEND (CONTINUED)

	GLOBE VALVE
	CHECK VALVE
	AUTOMATIC THREE–WAY CONTROL VALVE
	AUTOMATIC TWO–WAY CONTROL VALVE
	RELIEF VALVE
	ANGLE RELIEF VALVE
	LOCKSHIELD GLOBE VALVE
	SOLENOID VALVE
	BUTTERFLY VALVE (MANUAL)
	BUTTERFLY VALVE (MOTORIZED)
	BALL VALVE
	PUMP
	DIRT POCKET
	VALVE IN VERTICAL
	MANUAL AIR VENT
A	AUTOMATIC AIR VENT
	THERMOMETER
	PIPE SENSOR WELL (THERMOMETER)
	PRESSURE GAUGE AND COCK
	PRESSURE GAUGE WITH LOOP
	TEMPERATURE–PRESSURE TEST FITTING
℄	CENTER LINE
	PIPE SLEEVE
	BEAM PENETRATION
	PIPE GUIDE
	PIPE CAP
	PIPE BLIND FLANGE

DUCTWORK LEGEND

16x6 8x6 16x6 8x6	DUCT SPLIT WITH SPLIT SIZE
	RADIUS ELBOW
	ELBOW WITH TURNING VANES
	RECTANGULAR BRANCH TAKEOFF WITH BALANCING DAMPER
	RECTANGULAR SUPPLY DUCT UP
	RECTANGULAR SUPPLY DUCT DOWN
	RECTANGULAR RETURN OR EXHAUST DUCT UP
	RECTANGULAR RETURN OR EXHAUST DUCT DOWN
	ROUND DUCT, UP
	ROUND DUCT, DOWN
	BEAM PENETRATION
R	SLOPING RISE IN DUCTWORK
D	SLOPING DROP IN DUCTWORK
18x12 18x12	DUCT SIZE (CLEAR INSIDE DIMENSION) FIRST FIGURE INDICATES PLAN SIZE
18ϕ 18ϕ	ROUND DUCT DIAMETER SIZE (CLEAR INSIDE DIMENSION)
18 18	OVAL DUCT SIZE
	SIDE, TOP OR BOTTOM DUCT ACCESS DOOR
	ACOUSTIC LINING IN DUCT (DUCT SIZE NOTED INDICATES INSIDE DIMENSIONS)
	RECTANGULAR OR SQUARE TO ROUND OR OVAL TRANSITION
	FLEXIBLE CONNECTION
	DUCT END/CAP
	FLEXIBLE DUCT
	VOLUME DAMPER IN DUCT

DUCTWORK LEGEND (CONTINUED)

	AUTOMATIC CONTROL DAMPER
	FUSIBLE LINK FIRE DAMPER WITH DUCT ACCESS DOOR
	SMOKE DAMPER WITH DUCT ACCESS DOOR
	COMBINATION FIRE AND SMOKE DAMPER WITH DUCT ACCESS DOOR
	BACK DRAFT DAMPER WITH DUCT ACCESS DOOR
	CEILING DIFFUSER: 1–WAY BLOW, 3–WAY BLOW, 2–WAY BLOW, 4–WAY BLOW
	CEILING DIFFUSER WITH FLEXIBLE DUCT CONNECTION
	RETURN/EXHAUST REGISTER OR GRILLE
	RETURN/EXHAUST REGISTER OR GRILLE WITH FLEXIBLE DUCT CONNECTION
	FIRE RATED ENCASED DUCT
	TRANSFER GRILLES ON BOTH SIDES OF PARTITION OR WALL (SIZE)
	LINEAR DIFFUSER WITH PLENUM
SR–A12x8 (200) SR–A12x8 (200)	SUPPLY REGISTER WITH AIR OUTLET DEVICE DESIGNATION
ER–C12x8 (200) ER–C12x8 (200)	RETURN OR EXHAUST REGISTER OR GRILLE WITH AIR INLET DEVICE DESIGNATION

05/03/13 PERMIT SET

3/27/2013 8:48:32 PM

SAN FRANCISCO OAKLAND BAY BRIDGE
EAST SPAN SEISMIC SAFETY PROJECT

Shahjahan Ali
DESIGN OVERSIGHT

03/27/13
SIGN OFF DATE

	BY	CHECKED
DESIGN	JAMES GRONEK	ROBERT C. NIXDORF
DETAILS	BY	CHECKED
QUANTITIES	BY	CHECKED

PREPARED FOR THE
STATE OF CALIFORNIA
DEPARTMENT OF TRANSPORTATION

KAREN Y. WANG
PROJECT ENGINEER

BRIDGE NO

POST MILES
2.0

IERBYS TEMPORARY IMPROVEMENTS - BUILDING

MECHANICAL LEGEND AND ABBREVIATIONS

SHEET
M000

DESIGN DETAIL SHEET (ENGLISH) (REV. 03/14/12)

ORIGINAL SCALE IN INCHES FOR REDUCED PLANS 0 1 2 3

UNIT: 04
PROJECT NUMBER AND PHASE:
CONTRACT NO.: 0120F4

DISREGARD PRINTS BEARING EARLIER REVISION DATES

REVISION DATES				SHEET	OF
				42	66

C:\Users\cschurr\Documents\56185_Gateway Park - Central_cschurr.rvt

DIST	COUNTY	ROUTE	POST MILES TOTAL PROJECT	SHEET No	TOTAL SHEETS
04	ALA	80	2.0	1204av	1204

JRGK
REGISTERED ENGINEER — DATE 03/27/13

REGISTERED PROFESSIONAL ENGINEER — JAMES R. GRONEK — No. M 34898 — MECHANICAL — STATE OF CALIFORNIA

PLANS APPROVAL DATE

The state of California or its officers or agents shall not be responsible for the accuracy or completeness of scanned copies of this plan sheet.

WSP • FLACK + KURTZ
405 HOWARD ST. #500
SAN FRANCISCO, CA 94106

CONTROLS LEGEND

B / B	TOTALIZING BTU METER
E	EMERGENCY BREAK GLASS SWITCH FOR EQUIPMENT SHUT-DOWN
F / F	FLOW MEASURING STATION
	FLOW SWITCH
CM #	CARBON MONOXIDE SENSOR WITH ZONE DESIGNATION
CO #	CARBON DIOXIDE SENSOR WITH ZONE DESIGNATION
T #	TEMPERATURE SENSOR/THERMOSTAT WITH ZONE OR EQUIPMENT DESIGNATION
H #	HUMIDISTAT/HUMIDITY SENSOR WITH HUMIDIFIER DESIGNATION
TH #	COMBINATION TEMPERATURE/HUMIDITY SENSOR
S	DUCT SMOKE DETECTOR SUPPLIED BY ELECTRICAL TRADE, INSTALLED BY MECHANICAL TRADE
P #	STATIC PRESSURE SENSOR WITH DESIGNATION
R #	REFRIGERANT SENSOR WITH DESIGNATION

MISCELLANEOUS

DP	DIFFERENTIAL PRESSURE SENSOR
DP	DIFFERENTIAL PRESSURE SWITCH
	NEW WORK
	EXISTING WORK
	EXISTING WORK TO BE REMOVED
	POINT OF NEW CONNECTION TO EXISTING WORK
	OVAL
Ø	DIAMETER
U	UNDERCUT DOOR
HW / 1	RISER DESIGNATION — RISER SERVICE; RISER NUMBER
2 / M3.1	SECTION DESIGNATION — SECTION NUMBER; DRAWING NUMBER
1 / M2.1	DETAIL DESIGNATION — DETAIL NUMBER; DRAWING NUMBER
CT / 1-1	EQUIPMENT DESIGNATION — EQUIPMENT TYPE; EQUIPMENT FLOOR AND NUMBER
3-24	TERMINAL DESIGNATION — 3-24: THE NUMBER ON THE FLOOR; FLOOR OR LEVEL
CD-1,12x12 (550)	AIR OUTLET/INLET DEVICE DESIGNATION — CD-1,12x12 (550): TYPE; NECK OR FACE SIZE; CFM
LD-A,48x1,8Ø (300)	LINEAR DIFFUSER DEVICE DESIGNATION — LD-A,48x1,8Ø (300): TYPE; LENGTH & SLOT SIZE; PLENUM INLET SIZE; CFM

GAS-FIRED UNIT HEATER

DESIGNATION	SERVICE / LOCATION	MANUF. MODEL NUMBER	GAS HEATING MBH	GAS HEATING LENGTH	COMBUSTION AIR DUCT	VENT DUCT	VOLTAGE/ PHASE	NOTES
UH-1-1	GALLERY	SCHWANK UHE-90-40	90.0	40'10"	4Ø	4Ø	120/1	1,2,3,4
UH-1-2	GALLERY	SCHWANK UHE-90-40	90.0	40'10"	4Ø	4Ø	120/1	1,2,3,4
UH-1-3	GALLERY	SCHWANK UHE-90-40	90.0	40'10"	4Ø	4Ø	120/1	1,2,3,4
UH-1-4	GALLERY	SCHWANK UHE-90-40	90.0	40'10"	4Ø	4Ø	120/1	1,2,3,4
UH-1-5	GALLERY	SCHWANK UHE-90-40	90.0	40'10"	4Ø	4Ø	120/1	1,2,3,4
UH-1-6	GALLERY	SCHWANK UHE-90-40	90.0	40'10"	4Ø	4Ø	120/1	1,2,3,4

NOTES:
1. PROVIDE MANUFACTURER-RECOMMENDED CLEARANCES TO COMBUSTIBLE MATERIALS.
2. REFER TO MANUFACTURER RECOMMENDATIONS FOR FLUE LENGTH AND FITTING LIMITATIONS.
3. PROVIDE MANUFACTURER-SUPPLIED COMBUSTION AIR AND VENT DUCT TERMINATIONS FOR ABOVE ROOF.
4. MAINTAIN ALL MANUFACTURER-RECOMMENDED CLEARANCES FOR COMBUSTION AIR AND VENT DUCT TERMINATIONS.

AIR INLETS AND OUTLETS

DESIGNATION	TITUS MODEL NUMBER	TYPE OF SERVICE	FACE DIMENSIONS	NOTES
CD-A	ONMI	SUPPLY	12x12	1,2,4
LD-A	FL-HT	SUPPLY	60" LENGTH, 1" SLOT	1,2,3,4
LR-A	FL-HT	RETURN	60" LENGTH, 1" SLOT	2, 3, 5
EG-1	J-FL	RETURN/EXHAUST	16x6	2,4

NOTES:
1. REFER TO DRAWINGS FOR NECK SIZE.
2. CONFIRM BORDER TYPE AND FINISH OF ALL AIR INLETS AND OUTLETS WITH ARCHITECT.
3. PROVIDE MUD-IN LINEAR DIFFUSER BORDER.
4. PROVIDE REMOTE-OPERATED BALANCING DAMPER WITH CONTROL ACCESSIBLE THROUGH THE FACE OF THE DIFFUSER FOR ALL DIFFUSERS LOCATED IN HARD-LID CEILINGS. REFER TO SHEET M401 FOR REMOTE DAMPER DETAIL.
5. PROVIDE INSULATED LIGHTSHIELD FOR ALL LINEAR RETURNS.

FANS

DESIGNATION	LOCATION/ SERVICE	TYPE	CFM	STATIC PRESSURE (IN. WG.)	RPM	MOTOR HP / WATTS	MOTOR VOLTAGE/ PHASE	OPERATING WEIGHT (LBS)	SONES	VAR. SPEED (Y/N)	NOTES
SF-1-1	VENTILATION	CABINET	405	0.4	1,250	305 W	120/1	36	3	Y	1,2,3,4
EF-1-1	TOILET EXHAUST	CABINET	400	0.25	1,070	217 W	120/1	36	2	Y	1,2,3
EF-1-2	TOILET EXHAUST	CABINET	400	0.25	1,070	217 W	120/1	36	2	Y	1,2,3

NOTES:
1. REFER TO SUSPENDED EQUIPMENT SUPPORT DETAIL ON M401.
2. UNIT TO BE PROVIDED WITH DISCONECT BY DIV. 26.
3. PROVIDE SINGLE-PHASE SPEED CONTROLLER FOR BALANCING PURPOSES.
4. PROVIDE FAN WITH INTEGRAL MERV-8 FILTER.

VARIABLE REFRIGERANT VOLUME INDOOR DX FAN COIL

DESIGNATION	MODEL NUMBER	LOCATION	CFM	MIN. OA CFM	ESP (IN. WG.)	COOLING CAPACITY TOTAL MBH	COOLING CAPACITY SENSIBLE MBH	COOLING EAT DB (°F)	COOLING EAT WB (°F)	HEATING MODE SENSIBLE CAPACITY (BTU/H)	HEATING MODE EAT DB (°F)	ELECTRICAL DATA VOLTAGE/ PHASE	ELECTRICAL DATA MCA	ASSOCIATED CONDENSING UNIT	NOTES
FCU-1-1	–	SOUTH BAR	1380	0	0.2	44	43	76.2	60.3	56,630	65.8	208 / 1	3.4	CU-1-1	1,2,3,4
FCU-1-2	–	SOUTH BAR	1380	0	0.2	44	43	76.2	60.3	56,630	65.8	208 / 1	3.4	CU-1-1	1,2,3,4
FCU-1-3	–	SOUTH BAR	1380	0	0.2	44	43	76.2	60.3	56,630	65.8	208 / 1	3.4	CU-1-1	1,2,3,4

NOTES:
1. DUCTED CONCEALED UNIT TYPE.
2. PROVIDE UNIT WITH INTEGRAL CONDENSATE PUMP.
3. UNIT-MOUNTED DISCONNECT.
4. PROVIDE ACCESS PANELS IN HARD-LID CEILING FOR ADEQUATE MAINTENANCE ACCESS TO UNIT, IN ACCORDANCE WITH MANUFACTURER RECOMMENDATIONS.

VARIABLE REFRIGERANT VOLUME AIR-COOLED CONDENSING UNIT

DESIGNATION	TYPE	CAPACITY TOTAL MBH	CAPACITY SENSIBLE MBH	AIR COOLED CONDENSER OADB (°F)	AIR COOLED CONDENSER OAWB (°F)	AIR COOLED CONDENSER CFM	AIR COOLED CONDENSER PD (IN W.G.)	ELECTRICAL DATA VOLTAGE/ PHASE	ELECTRICAL DATA MCA	ELECTRICAL DATA MAX FUZE AMPS	OPERATING WEIGHT (LBS)	NOTES
CU-1-1	HEAT PUMP	160	–	84	70	6,530	–	208 / 3	36.1 + 36.1	50 + 50	560 + 560	1, 2, 3

NOTES:
1. PROVIDE WITH R-410A REFRIGERANT.
2. CONDENSING UNIT CONSISTS OF TWO AIR COOLED CONDENSER MODULES. COORDINATE 2 POINTS OF ELECTRICAL CONNECTION WITH ELECTRICAL CONTRACTOR.
3. UNIT-MOUNTED DISCONNECT.

05/03/13 PERMIT SET

3/27/2013 8:48:39 PM

SAN FRANCISCO OAKLAND BAY BRIDGE
EAST SPAN SEISMIC SAFETY PROJECT

IERBYS TEMPORARY IMPROVEMENTS - BUILDING

MECHANICAL SCHEDULES

SHEET M001

Shahjahan Ali
DESIGN OVERSIGHT
03/27/13
SIGN OFF DATE

	BY	CHECKED
DESIGN	JAMES GRONEK	ROBERT C. NIXDORF
DETAILS		
QUANTITIES		

PREPARED FOR THE STATE OF CALIFORNIA DEPARTMENT OF TRANSPORTATION

KAREN Y. WANG
PROJECT ENGINEER

BRIDGE NO
POST MILES 2.0

DISREGARD PRINTS BEARING EARLIER REVISION DATES

REVISION DATES

SHEET 43 OF 66

DESIGN DETAIL SHEET (ENGLISH) (REV. 03/14/12)

ORIGINAL SCALE IN INCHES FOR REDUCED PLANS 0 1 2 3

UNIT: 04
PROJECT NUMBER AND PHASE:
CONTRACT NO.: 0120F4

C:\Users\cschurr\Documents\56185_Gateway Park - Central_cschurr.rvt

DIST	COUNTY	ROUTE	POST MILES TOTAL PROJECT	SHEET No	TOTAL SHEETS
04	ALA	80	2.0	1204aw	1204

JRGK
REGISTERED ENGINEER

03/27/13
DATE

REGISTERED PROFESSIONAL ENGINEER
JAMES R. GRONEK
No. M 34898
MECHANICAL
STATE OF CALIFORNIA

PLANS APPROVAL DATE

The state of California or its officers or agents shall not be responsible for the accuracy or completeness of scanned copies of this plan sheet.

WSP • FLACK + KURTZ
405 HOWARD ST. #500
SAN FRANCISCO, CA 94106

CERTIFICATE OF COMPLIANCE and FIELD INSPECTION ENERGY CHECKLIST (Part 2 of 5) MECH-1-C

PROJECT NAME: IERBYS TEMPORARY IMPROVEMENTS
DATE: 02.21.2013

Discrepancies:

2008 Nonresidential Compliance Forms *March 2010*

CERTIFICATE OF COMPLIANCE and FIELD INSPECTION ENERGY CHECKLIST (Part 1 of 5) MECH-1-C

PROJECT NAME: IERBYS TEMPORARY IMPROVEMENTS
DATE: 02.22.2013
CLIMATE ZONE: 3
PROJECT ADDRESS: 210 BURMA ROAD, OAKLAND
CONDITIONED FLOOR AREA: 2,905 SF

GENERAL INFORMATION

BUILDING TYPE: [X] NONRESIDENTIAL [ ] HIGH RISE RESIDENTIAL [ ] HOTEL/MOTEL GUEST ROOM
[ ] SCHOOLS (Public School) [ ] RELOCATABLE PUBLIC SCHOOL BLDG. [ ] CONDITIONED SPACES [ ] UNCONDITIONED SPACES
PHASE OF CONSTRUCTION: [ ] NEW CONSTRUCTION [ ] ADDITION [X] ALTERATION
APPROACH OF COMPLIANCE: [X] COMPONENT [ ] OVERALL ENVELOPE TDV ENERGY [ ] UNCONDITIONED (file affidavit)
FRONT ORIENTATION: N, E, S, W or in Degrees: N

HVAC SYSTEM DETAILS — **FIELD INSPECTION ENERGY CHECKLIST** (Meets Criteria or Requirements)

EQUIPMENT[2]	INSPECTION CRITERIA	Special Feature[1]	Pass	Fail-Describe Reason[3]
Item or System Tags (i.e. AC-1, RTU-1, HP-1)	CU-1-1	[ ]	[ ]	[ ]
Equipment type[4]:	SPLIT VRV	[ ]	[ ]	[ ]
No of systems	1	[ ]	[ ]	[ ]
Max Allowed Heating Capacity	N/A	[ ]	[ ]	[ ]
Minimum Heating Efficiency	3.3 COP	[ ]	[ ]	[ ]
Max Allowed Cooling Capacity	240 MBH	[ ]	[ ]	[ ]
Cooling Efficiency	20 EER	[ ]	[ ]	[ ]
Duct Location/ R-Value	CEILING/R-4.2	[ ]	[ ]	[ ]
Duct Leakage Testing- If Yes, a MECH-4A must be submitted	YES	[ ]	[ ]	[ ]
Economizer	NO	[ ]	[ ]	[ ]
Thermostat	YES	[ ]	[ ]	[ ]
Fan Control	LOCAL 3 SPEED	[ ]	[ ]	[ ]

FIELD INSPECTION ENERGY CHECKLIST

EQUIPMENT[2]	INSPECTION CRITERIA	Special Feature[1]	Pass	Fail-Describe Reason[3]
Item or System Tags (i.e. AC-1, RTU-1, HP-1)		[ ]	[ ]	[ ]
Equipment type[4]:		[ ]	[ ]	[ ]
No of systems		[ ]	[ ]	[ ]
Max Allowed Heating Capacity		[ ]	[ ]	[ ]
Minimum Heating Efficiency		[ ]	[ ]	[ ]
Max Allowed Cooling Capacity		[ ]	[ ]	[ ]
Cooling Efficiency		[ ]	[ ]	[ ]
Duct Location/ R-Value		[ ]	[ ]	[ ]
Duct Leakage Testing- If Yes, a MECH-4A must be submitted		[ ]	[ ]	[ ]
Economizer		[ ]	[ ]	[ ]
Thermostat		[ ]	[ ]	[ ]
Fan Control		[ ]	[ ]	[ ]

1. Indicate special feature DETAILS on page 2 of the Inspection Checklist Form.
2. If the Actual installed equipment performance efficiency and capacity is less than the Proposed (from the energy compliance submittal or from the building plans) the responsible party shall resubmit energy compliance to include the new changes.
3. For additional detailed discrepancy use Page 2 of the Inspection Checklist Form.
4. Indicate Equipment Type: Gas (Pkg or Split), VAV, HP (Pkg or Split), Hydronic, PTAC, or other.

2008 Nonresidential Compliance Forms *March 2010*

CERTIFICATE OF COMPLIANCE and FIELD INSPECTION ENERGY CHECKLIST (Part 5 of 5) MECH-1-C

PROJECT NAME: IERBYS TEMPORARY IMPROVEMENTS
DATE: 02.22.2013

DOCUMENTATION AUTHOR'S DECLARATION STATEMENT

- I certify that this Certificate of Compliance documentation is accurate and complete.

NAME: JAMES R. GRONEK
SIGNATURE: James R. Gronek
COMPANY: WSP FLACK + KURTZ
DATE: 02.22.2013
ADDRESS: 405 HOWARD STREET, SUITE 500
If Applicable
CEA # –
CEPE # –
CITY/STATE/ZIP: SAN FRANCISCO, CA 94105
PHONE: (415) 398-3833

PRINCIPAL MECHANICAL DESIGNER'S DECLARATION STATEMENT

- I am eligible under Division 3 of the California Business and Professions Code to accept responsibility for the mechanical design.
- This Certificate of Compliance identifies the mechanical features and performance specifications required for compliance with Title 24, Parts 1 and 6 of the California Code of Regulations.
- The design features represented of this Certificate of Compliance are consistent with the information provided to document this design on the other applicable compliance forms, worksheets, calculations, plans and specifications submitted to the enforcement agency for approval with this building permit application.

NAME: JAMES R. GRONEK
SIGNATURE: James R. Gronek
COMPANY: WSP FLACK + KURTZ
DATE: 02.22.2013
ADDRESS: 405 HOWARD STREET, SUITE 500
LICENSE: M34898
CITY/STATE/ZIP: SAN FRANCISCO, CA 94105
PHONE: (415) 398-3833

MANDATORY MEASURES
Indicate location on building plans of Note Block for Mandatory Measures: M004

MECHANICAL COMPLIANCE FORMS & WORKSHEETS (check box if worksheet is included)

For detailed instructions on the use of this and all Energy Efficiency Standards compliance forms, refer to the 2008 Nonresidential Manual.
Note: The Enforcement Agency may require all forms to be incorporated onto the building plans.

[X]	MECH-1C	Certificate of Compliance. Required on plans for all submittals.
[X]	MECH-2C	Mechanical Equipment Summary is required for all submittals.
[X]	MECH-3C	Mechanical Ventilation and Reheat is required for all submittals with mechanical ventilation.
[X]	MECH-4C	Fan Power Consumption is required when for all prescriptive submittals.

2008 Nonresidential Compliance Forms *August 2009*

05/03/13 PERMIT SET

3/27/2013 8:48:51 PM

Shahjahan Ali
DESIGN OVERSIGHT
03/27/13
SIGN OFF DATE

	BY	CHECKED
DESIGN	JAMES GRONEK	ROBERT C. NIXDORF
DETAILS		
QUANTITIES		

PREPARED FOR THE
STATE OF CALIFORNIA
DEPARTMENT OF TRANSPORTATION

KAREN Y. WANG
PROJECT ENGINEER

BRIDGE NO
POST MILES 2.0

SAN FRANCISCO OAKLAND BAY BRIDGE EAST SPAN SEISMIC SAFETY PROJECT

IERBYS TEMPORARY IMPROVEMENTS - BUILDING

MECHANICAL TITLE 24

SHEET M002

DESIGN DETAIL SHEET (ENGLISH) (REV. 03/14/12)

ORIGINAL SCALE IN INCHES FOR REDUCED PLANS 0 1 2 3

UNIT: 04
PROJECT NUMBER AND PHASE: CONTRACT NO.: 0120F4

DISREGARD PRINTS BEARING EARLIER REVISION DATES

REVISION DATES ___ ___ ___ ___

SHEET 44 OF 66

C:\Users\cschurr\Documents\56185_Gateway Park - Central_cschurr.rvt

DIST	COUNTY	ROUTE	POST MILES TOTAL PROJECT	SHEET No	TOTAL SHEETS
04	ALA	80	2.0	1204ax	1204

JRGK
REGISTERED ENGINEER 03/27/13 DATE

REGISTERED PROFESSIONAL ENGINEER JAMES R. GRONEK No. M 34898 MECHANICAL STATE OF CALIFORNIA

PLANS APPROVAL DATE

The state of California or its officers or agents shall not be responsible for the accuracy or completeness of scanned copies of this plan sheet.

WSP • FLACK + KURTZ
405 HOWARD ST. #500
SAN FRANCISCO, CA 94106

CERTIFICATE OF COMPLIANCE and FIELD INSPECTION ENERGY CHECKLIST (Part 4 of 5) MECH-1-C

PROJECT NAME IERBYS TEMPORARY IMPROVEMENTS DATE 02.22.2013

Test Description		MECH-12A	MECH-13A	MECH-14A	MECH-15A	
Equipment Requiring Testing	# of units	Fault Detection & Diagnostics for DX Units	Automatic Fault Detection & Diagnostics for Air & Zone	Distributed Energy Storage DX AC Systems	Thermal Energy Storage (TES) Systems	Test Performed By:
CU-R-1 AND ASSOCIATED FCUs	4	☒	☐	☐	☐	MECHANICAL CONTRACTOR
		☐	☐	☐	☐	
		☐	☐	☐	☐	
		☐	☐	☐	☐	
		☐	☐	☐	☐	
		☐	☐	☐	☐	
		☐	☐	☐	☐	
		☐	☐	☐	☐	
		☐	☐	☐	☐	
		☐	☐	☐	☐	
		☐	☐	☐	☐	
		☐	☐	☐	☐	
		☐	☐	☐	☐	
		☐	☐	☐	☐	
		☐	☐	☐	☐	
		☐	☐	☐	☐	
		☐	☐	☐	☐	
		☐	☐	☐	☐	
		☐	☐	☐	☐	
		☐	☐	☐	☐	
		☐	☐	☐	☐	
		☐	☐	☐	☐	
		☐	☐	☐	☐	
		☐	☐	☐	☐	
		☐	☐	☐	☐	
		☐	☐	☐	☐	
		☐	☐	☐	☐	
		☐	☐	☐	☐	

2008 Nonresidential Compliance Forms *August 2009*

CERTIFICATE OF COMPLIANCE and FIELD INSPECTION ENERGY CHECKLIST (Part 3 of 5) MECH-1-C

PROJECT NAME IERBYS TEMPORARY IMPROVEMENTS DATE 02.22.2013

Required Acceptance Tests

DESIGNER: WSP FLACK+KURTZ

This form is to be used by the designer and attached to the plans. Listed below are all the acceptance tests for mechanical systems. The designer is required to check the applicable boxes by all acceptance tests that apply and list all equipment that requires an acceptance test. If all equipment of a certain type requires a test, list the equipment description and the number of systems. The NA number designates the Section in the Appendix of the Nonresidential Reference Appendices Manual that describes the test. Since this form will be part of the plans, completion of this section will allow the responsible party to budget for the score of work appropriately.

ENFORCEMENT AGENCY: CITY OF OAKLAND

SYSTEM ACCEPTANCE. Before occupancy permit is granted for a newly constructed building or space, or a new space-conditioning system serving a building or space is operated for normal use, all control devices serving the building or space shall be certified as meeting the Acceptance Requirements for Code Compliance.
SYSTEM ACCEPTANCE. Before occupancy permit is granted. All newly installed HVAC equipment must be tested using the Acceptance Requirements.

The MECH-1C form is not considered a completed form and is not to be accepted by the building department unless the correct boxes are checked. The equipment requiring testing, person performing the test (Example: HVAC installer, TAB contractor, controls contractor, PE in charge of project) and what Acceptance test must be conducted. The following checked-off forms are required for ALL newly installed equipment. In addition a Certificate of Acceptance forms shall be submitted to the building department that certifies plans, specifications, installation certificates, and operating and maintenance information meet the requirements of §10-103(b) and Title 24 Part 6. The building inspector must receive the properly filled out and signed forms before the building can receive final occupancy.

Test Description		MECH-2A	MECH-3A	MECH-4A	MECH-5A	MECH-6A	MECH-7A	MECH-8A	MECH-9A	MECH-10A	MECH-11A
Equipment Requiring Testing or Verification	# of units	Outdoor Ventilation for VAV & CAV	Constant Volume & Single-Zone Unitary	Air Distribution Ducts	Economizer Controls	Demand Control Ventilation DCV	Supply Fan VAV	Valve Leakage Test	Supply Water Temp. Reset	Hydronic System Variable Flow Control	Automatic Demand Shed Control
CU-R-1 AND ASSOCIATED FCUs	4	☒	☐	☒	☐	☐	☐	☐	☐	☐	☐
		☐	☐	☐	☐	☐	☐	☐	☐	☐	☐
		☐	☐	☐	☐	☐	☐	☐	☐	☐	☐
		☐	☐	☐	☐	☐	☐	☐	☐	☐	☐
		☐	☐	☐	☐	☐	☐	☐	☐	☐	☐
		☐	☐	☐	☐	☐	☐	☐	☐	☐	☐
		☐	☐	☐	☐	☐	☐	☐	☐	☐	☐
		☐	☐	☐	☐	☐	☐	☐	☐	☐	☐
		☐	☐	☐	☐	☐	☐	☐	☐	☐	☐
		☐	☐	☐	☐	☐	☐	☐	☐	☐	☐

2008 Nonresidential Compliance Forms *August 2009*

AIR SYSTEM REQUIREMENTS (Part 1 of 3) MECH-2-C

PROJECT NAME: IERBYS TEMPORARY IMPROVEMENTS DATE: 02.22.2013

Item or System Tags (i.e. AC-1, RTU-1, HP-1, CT-1, etc...)	Indicate Air Systems Type (Central, Single Zone, Package, VAV or etc...)					
		CU-1-1 AND FCUs				
No. of Systems		1				
	Indicate Page Reference on the Plans or Schedule list or list informatiom below					
MANDATORY MEASURES	*T-24 Sections*					
Heating Equipment Efficiency	112(a)	3.5 COP				
Cooling Equipment Efficiency	112(a)	20 EER				
HVAC or Heat Pump Thermostats	112(b), 112(c)	YES				
Furnace Controls/Thermostat	112(c), 115(a)	N/A				
Natural Ventilation	121(b)	NO				
Mechanical Ventilation	121(b)	YES				
VAV Minimum Position Control	121(c)	N/A				
Demand Control Ventilation	121(c)	N/A				
Time Control	122(e)	YES				
Setback and Setup Control	122(e)	N/A				
Outdoor Damper Control	122(f)	YES				
Isolation Zones	122(g)	N/A				
Pipe Insulation	123	YES				
Duct Insulation	124	YES				
PRESCRIPTIVE MEASURES						
Calculated Design Heating Load	144(a & b)	165 MBH				
Calculated Design Cooling Load	144(a & b)	132 MBH				
Fan Control	144(c)	3 SPEED				
DP Sensor Location	144(c)	N/A				
Supply Pressure Reset (DDC only)	144(c)	N/A				
Simulataneous Heat/Cool	144(d)	NO				
Economizer	144(e)	N/A				
Heat and Cool Air Supply Reset	144(f)	N/A				
Electric Resistance Heating [1]	144(g)	NO				
Heat Rejection System	144(h)	AIR COOLED				
Air Cooled Chiller Limitation	144(i)	N/A				
Duct Leakage Sealing. If Yes, a **MECH-4-A** must be submitted	144(k)	YES				

1. Total installed capacity (MBtu/hr) of all electric heat on this project exclusive of electric auxilary heat for heat pumps. If electric heat is used explain which exception(s) to §144(g) apply.

2008 Nonresidential Compliance Forms *August 2009*

MECHANICAL VENTILATION AND REHEAT MECH-3-C

PROJECT NAME IERBYS TEMPORARY IMPROVEMENTS DATE 02.22.2013

MECHANICAL VENTILATION (§121(b)2)									REHEAT LIMITATION (§144(d))				
	AREA BASIS			OCCUPANCY BASIS					VAV MINIMUM				
A	B	C	D	E	F	G	H	I	J	K	L	M	N
Zone/ System	Condition Area (ft^2)	CFM per ft^2	Min CFM by Area B x C	Num of People	CFM per Person	Min CFM by Occupant E x F	REQ'D V.A. Max of D or G	Design Ventilation Air cfm	50% of Design Zone Supply cfm	B x 0.4 cfm/ft^2	Max of Columns H,J,K, or 300 cfm	Design Minimum Air setpoint	Transfer Air
FCU-1-1	652	0.15	98	4	15	60	98	135					
FCU-1-2	677	0.15	102	4	15	60	102	135					
FCU-1-3	864	0.15	130	8	15	120	130	135					
			Totals	16			330	405	Column I Total Design Ventilation Air				

C	Minimum ventilation rate per Section §121, Table 121-A
E	Based on fixed seat or the greater of the expected number of occupants and 50% of the CBC occupant load for egress purposes for spaces without fixed seating.
H	Required Ventilation Air (REQ'D V.A.) is the larger of the ventilation rates calculated on an AREA BASIS or OCCUPANCY BASIS (Column D or G).
I	Must be greater than or equal to H, or use Transfer Air (column N) to make up the difference
J	Design fan supply cfm (Fan CFM) x 50%; or the design zone outdoor airflow rate per §121
K	Condition area (ft^2) x 0.4 cfm/ft^2; or
L	Maximum of Columns H,J,K, or 300 cfm
M	This must be less than or equal to Column L and greater than or equal to the sum of Columns H plus N.
N	Transfer Air must be provided where the Required ventilation Air (Column I) is greater than the Design Minimum Air (Column M). Where required, transfer air must be greater than or equal to the difference between the Required Ventilation Air (Column H) and the Design Minimum Air (Column I), Column H minus M.

2008 Nonresidential Compliance Forms *July 2010*

SERVICE HOT WATER & POOL/SPA REQUIREMENTS (Part 3 of 3) MECH-2-C

PROJECT NAME: IERBYS TEMPORARY IMPROVEMENTS DATE: 02.22.2013

Item or System Tags (i.e. WH-1, WHP, DHW, etc...) [1]		Service Hot Water, Pool Heating				
		EWH-1 AND EWH-2				
No. of Systems		2				
	Indicate Page Reference on Plans or Schedule [2]					
MANDATORY MEASURES	*T-24 Sections*					
SERVICE HOT WATER						
Certified Water Heater	§111, §113(a)	YES				
Water Heater Efficiency	§113(b)	98%				
Service Water Heating Installation	§113(c)	YES				
Pipe Installation	§123	YES				
POOL AND SPA						
Pool and Spa Efficiency and Control	§114(a)					
Pool and Spa Electric Resistance Heating	§114(b) Exception					
Pool and Spa Installation	§114(b)					
Pool Heater - No Pilot Light	§115(c)					
Spa Heater - No Pilot Light	§115(d)					
Pipe Installation	§123					

1. The Proposed equipment need to match the building plans schedule or specifications. If a requirement is not applicable, put "N/A" in the column next to the measure.
2. For each water heater, pool heat and domestic water loop (or groups of similar equipment) fill in the reference to sheet number and/or specification section and paragraph number where the required features are documented. If a requirement is not applicable, put "N/A" in the column.

2008 Nonresidential Compliance Forms *August 2009*

WATER SIDE SYSTEM REQUIREMENTS (Part 2 of 3) MECH-2-C

PROJECT NAME: IERBYS TEMPORARY IMPROVEMENTS DATE: 02.22.2013

Item or System Tags (i.e. AC-1, RTU-1, HP-1, CT-1, etc...) [1]		WATER[2] SIDE SYSTEMS: Chillers, Towers, Boilers, Hydronic Loops				
No. of Systems						
	Indicate Page Reference on Plans or Specification [2]					
MANDATORY MEASURES	*T-24 Sections*					
Equipment Efficiency	112(a)					
Pipe Insulation	123					
PRESCRIPTIVE MEASURES						
Cooling Tower Fan Controls	144(h)					
Cooling Tower Flow Controls	144(h)	**N/A - NO NEW WATER SIDE SYSTEMS**				
Variable Flow System Design	144(j)					
Chiller and Boiler Isolation	144(j)					
CHW and HHW Reset Controls	144(j)					
WLHP Isolation Valves	144(j)					
VSD on CHW, CW & WLHP Pumps > 5HP	144(j)					
DP Sensor Location	144(j)					

1. The Proposed equipment need to match the building plans schedule or specifications. If a requirement is not applicable, put "N/A" in the column next to applicable section.
2. For each chiller, cooling tower, boiler, and hydronic loop (or groups of similar equipment) fill in the reference to sheet number and/or specification section and paragraph number where the required features are documented. If a requirement is not applicable, put "N/A" in the column next to applicable section.

2008 Nonresidential Compliance Forms *March 2010*

05/03/13 PERMIT SET

3/27/2013 8:48:59 PM

SAN FRANCISCO OAKLAND BAY BRIDGE
EAST SPAN SEISMIC SAFETY PROJECT

Shahjahan Ali
DESIGN OVERSIGHT
03/27/13
SIGN OFF DATE

	BY	CHECKED
DESIGN	JAMES GRONEK	ROBERT C. NIXDORF
DETAILS		
QUANTITIES		

PREPARED FOR THE
STATE OF CALIFORNIA
DEPARTMENT OF TRANSPORTATION

KAREN Y. WANG
PROJECT ENGINEER

BRIDGE NO
POST MILES 2.0

IERBYS TEMPORARY IMPROVEMENTS - BUILDING
MECHANICAL TITLE 24

SHEET M003

DESIGN DETAIL SHEET (ENGLISH) (REV. 03/14/12)

ORIGINAL SCALE IN INCHES FOR REDUCED PLANS 0 1 2 3

UNIT: 04
PROJECT NUMBER AND PHASE: CONTRACT NO.: 0120F4

DISREGARD PRINTS BEARING EARLIER REVISION DATES

REVISION DATES

SHEET	OF
45	66

C:\Users\cschurr\Documents\56185_Gateway Park - Central_cschurr.rvt

DIST	COUNTY	ROUTE	POST MILES TOTAL PROJECT	SHEET No	TOTAL SHEETS
04	ALA	80	2.0	1204ay	1204

JRGK
REGISTERED ENGINEER — DATE 03/27/13

PLANS APPROVAL DATE

REGISTERED PROFESSIONAL ENGINEER — JAMES R. GRONEK — No. M 34898 — MECHANICAL — STATE OF CALIFORNIA

The state of California or its officers or agents shall not be responsible for the accuracy or completeness of scanned copies of this plan sheet.

WSP • FLACK + KURTZ
405 HOWARD ST. #500
SAN FRANCISCO, CA 94106

FAN POWER CONSUMPTION — MECH-4-C

PROJECT NAME: IERBYS TEMPORARY IMPROVEMENTS — DATE: 02.22.2013

NOTE: Provide one copy of this worksheet for each fan system with a total fan system horsepower greater than 25 hp for Constant Air Volume (CAV) Fan Systems or Variable Air Volume (VAV) Systems when using the Prescriptive Approach. See Power Consumption of fans §144 (c)

A	B	C	D	E	F
FAN DESCRIPTION	DESIGN BRAKE HP	EFFICIENCY		NUMBER OF FANS	PEAK WATTS B x E x 746 / (C x D)
		MOTOR	DRIVE		
N/A - NO NEW FANS > 25HP					

Totals and Adjustments			
FILTER PRESSURE ADJUSTMENT Equation 144-A in §144 (c) of the Energy Standards.	1) TOTAL FAN SYSTEM POWER (WATTS, SUM COLUMN F)		
	2) SUPPLY DESIGN AIRFLOW (CFM)		
A) If filter pressure drop (SP_f) is greater than 1 inch W.C. or 245 Pascal then enter SP_f on line 4. Enter Total Fan pressure drop across the fan (SP_t) on Line 5.	3) TOTAL FAN SYSTEM POWER INDEX (Row 1 / Row 2) [1]		W/CFM
	4) SP_f		
B) Calculate Fan Adjustment and enter on line 6.	5) SP_t		
C) Calculate Adjusted Fan Power Index and enter on Row 7	6) Fan Adjustment = 1-(SP_f -1)/SP_t		
	7) ADJUSTED FAN POWER INDEX (Line 3 x Line 6) [1]		W/CFM

1. TOTAL FAN SYSTEM POWER INDEX or ADJUSTED FAN POWER INDEX must not exceed 0.8 w/cfm for Constant Volume systems or 1.25 w/cfm for VAV systems.

2008 Nonresidential Compliance Forms — *August 2009*

MECHANICAL MANDATORY MEASURES

Controls (§122)

- [ ] Heat pumps with supplementary electric resistance heaters; should prevent supplementary heater operation when the heating load can be met by the heat pump alone; and
- [ ] In which the cut-on temperature for compression heating is higher then the cut-on temperature for supplementary heating, and the cut-off temperature for compression heating is higher than the cut-off temperature for supplementary heating.
- [X] Thermostats. All unitary heating and/or cooling systems heat pumps that are not controlled by a central energy management control system (ECMS) shall have a setback thermostat.
- [ ] Thermostatic Controls for Each Zone. The supply of heating and cooling energy to each space-conditioning zone or dwelling unit shall be controlled by an individual thermostatic control that responds to temperature within the zone and that meets the applicable requirements of Section 122(b).
- [X] Criteria for Zonal Thermostatic Controls. The individual thermostatic controls required by Section 122(a) shall meet requirements; for heating shall be capable of being set, locally or remotely, down to 55°F or lower. Or for cooling it shall be capable of being set, locally or remotely, up to 85°F or higher.
- [ ] For Hotel/Motel Guest Room and High-rise Residential Dwelling Unit Thermostats; shall have: Numeric temperature setpoints in °F; and Setpoint stops accessible only to authorized personnel, to restrict over-heating and over cooling and meet Section 150(i).
- [ ] Heat Pump Controls. All heat pumps with supplementary electric resistance heaters shall be installed with controls that comply with Section 112(b).
- [X] Shut-off and Reset Controls for Space-conditioning Systems; shall be installed with controls that comply with controls capable of automatically shutting off the system during periods of nonuse and shall have by having an automatic time switch control device and accessible manual override that allow operation of the system for up to 4 hours.
- [X] Dampers for Air Supply and Exhaust Equipment. Outdoor air supply and exhaust equipment shall be installed with dampers that automatically close upon fan shutdown.
- [ ] Isolation Area Devices. Each space-conditioning system serving multiple zones with a combined conditioned floor area of more than 25,000 square feet shall be designed, installed, and controlled to serve isolation areas.
- [ ] Automatic Design Shed Controls. HVAC systems with DDC to the Zone level shall be programmed to allow centralized demand shed for non-critical zones.

Pipe Insulation (§123)

- [X] The piping for all space-conditioning and service water-heating systems with fluid temperatures listed in TABLE 123-A shall install the amount of insulation specified.

Duct Construction and Insulation (§124)

- [X] All air distribution system ducts and plenums, including, but not limited to, building cavities, mechanical closets, air-handler boxes and support platforms used as ducts or plenums, shall be installed, sealed and insulated to meet the requirements of the 2007 CMC Sections 601, 602, 603, 604, 605 and Standard 6-5.

Acceptance Tests (§125 and Reference Nonresidential Appendix NA7)

- [X] Before an occupancy permit is granted the Certificate of Acceptance shall be submitted to the enforcement agency that certifies that the equipment and systems meet the acceptance requirements.

Refrigerated Warehouses (§126)

- [ ] A refrigerated warehouse with total cold storage and frozen storage area of 3,000 square feet or larger shall meet the insulation requirements for refrigerated warehouses listed on the R-values in Table 126-A.
- [ ] Underslab heating. Electric resistance heat shall not be used for the purposes of underslab heating.
- [ ] Evaporators. Fan-powered evaporators used in coolers and freezers shall conform to a single phase fan motors less than 1 hp and less than 460 Volts shall be electronically commutated motors. In addition the Evaporator fans shall be variable speed and the speed shall be controlled in response to space conditions.
- [ ] Condensers. Fan-powered condensers for system utilizing ammonia shall be evaporatively cooled. Condensing temperatures for evaporative condensers under design conditions, including but not limited to condensers served by cooling towers shall be less than or equal to the design wetbulb temperature:
  - plus 20°F in locations where the design wetbulb temperature is less than or equal to 76°F,
  - plus 19°F in locations where the design wetbulb temperature is between 76°F and 78°F, or
  - plus 18°F in locations where the design wetbulb temperature is greater than or equal to 78°F.
- [ ] Compressors. Compressor systems utilized in refrigerated warehouses shall conform to compressors designed to operate at a minimum condensing temperature of 70°F or less. The compressor speed of a screw compressor greater than 50 hp shall be controllable in response to the refrigeration load or the input power to the compressor shall be controlled to be less than or equal to 60% of full load input power when operated at 50% of full refrigeration capacity.

2008 Nonresidential Compliance Forms — *August 2009*

MECHANICAL MANDATORY MEASURES

Certification of Equipment Efficiency (§110 and §111)

- [X] Any appliance for which there is a California standard established in the Appliance Efficiency Regulations may be installed only if the manufacturer has certified to the Commission, as specified in those regulations, that the appliance complies with the applicable standard for that appliance. For certified appliances, go to www.energy.ca.gov/appliances/database

HVAC equipment efficiencies (§112)

- [X] Mechanical equipment installed in a building subject to these regulations must be certified as meeting certain minimum efficiency. These requirements are contained in §112. The AFUE, COP, EER, IPLV, combustion efficiency values of all equipment must be determined using the applicable test method specified in the Standards.
- [X] The following space-conditioning equipment may be installed only if the manufacturer has certified that the equipment meets or exceeds all applicable efficiency requirements of the Standards: all air conditioners, heat pumps and condensing units >135,000 Btu/hr; all water chillers;
- [N/A] All gas and oil fired furnaces with input rating >225,000 Btu/hr shall have an intermittent ignition or interrupted device (IDD), and have either power venting or a flue damper.

Service Water Heating (§111 and §113)

- [X] Certification by Manufacturers. Any service water-heating system or equipment may be installed only if the manufacturer has certified that the system or equipment complies with all of the requirements of this subsection for that system or equipment.
- [ ] Outlet temperature controls. On systems that have a total capacity greater than 167,000 Btu/hr, outlets that require higher than service water temperatures as listed in the ASHRAE Handbook, Applications Volume, shall have separate remote heaters, heat exchangers, or boosters to supply the outlet with the higher temperature.
- [ ] Controls for hot water distribution systems. Service hot water systems with circulating pumps or with electrical heat trace systems shall be capable of automatically turning off the system.
- [X] Insulation. Unfired service water heater storage tanks and backup tanks for solar water-heating systems shall have; External insulation with an installed R-value of at least R-12; or internal and external insulation with with a combined R-value of at least R-16; or the heat loss of the tank surface based on an 80° F water-air temperature difference shall be less than 6.5 Btu/hr per square foot.
- [ ] Water Heating Recirculation Loops Serving Multiple Dwelling Units, High-Rise Residential, Hotel/Motel and Nonresidential as listed on §113(c)5A, B, C, D, E, F.
- [ ] Service water heaters in state buildings. Any newly constructed building constructed by the State shall derive its service water heating from a system that provides at least 60% of the energy needed for service water heating from site solar energy or recovered energy.

Pool and Spas
Service Water Heating and Pool Heating Measures (§114)

- [ ] Any pool or spa heating system or equipment may be installed only if the manufacturer has certified that the system or equipment has all of following:
  - Efficiency,
  - On-off switch instructions. A permanent, easily readable and weatherproof plate or card that gives instruction for the energy efficient operation of the pool or spa heater and for the proper care of pool or spa water when a cover is used.
  - No electric resistance heating.
- [ ] Installation of any pool or spa system or equipment shall be installed with at least 36" of pipe shall be installed between the filter and the heater or dedicated suction and return lines, or built-in or built-up connections and shall be installed to allow for the future addition of solar heating equipment.
- [ ] Covers. A cover for outdoor pools or outdoor spas that have a heat pump or gas heater.
- [ ] Pool shall have directional inlets that adequately mix the pool water; and time switch or similar control mechanism shall be installed as part of the pool water circulation control system.

Ventilation (§121)

- [X] All enclosed spaces in a building that are normally used by humans shall be ventilated in accordance with the requirements of this section and the CBC.
- [X] The outdoor air-ventilation rate and air-distribution assumptions made in the design of the ventilating system shall be clearly identified on the building plans required by §10-103 of Title 24, Part 1.
- [X] Every space in a building shall be designed to have outdoor air-ventilation either by Natural ventilation or Mechanical ventilation.
- [X] Times of occupancy. The minimum rate of outdoor air required by Section 121(b)2 shall be supplied to each space at all times when the space is usually occupied.
- [X] Ducting for Zonal Heating and Cooling Units. Where a return plenum is used to distribute outdoor air to a zonal heating or cooling unit which then supplies the air to a space in order to meet the requirements of Section 121(b)2 the outdoor air shall be ducted to discharge either: within 5 feet of the unit; or within 15 feet of the unit, substantially toward the unit, and at a velocity not less than 500 ft/min.
- [X] Design and Control Requirements for Quantities of Outdoor Air. All mechanical ventilation and space-conditioning systems shall be designed with and have installed ductwork, dampers, and controls to allow outside air rates to be operated at the larger of (1) the minimum levels specified in Section 121(b)1 or (2) the rate required for make-up of exhaust systems that are required for a process, for control of odors, or for the removal of contaminants within the space.

Demand Controlled Ventilation §121(c)

- [ ] Every space requiring Demand Control Ventilation. They must have an air economizer; and they serve a space with a design occupant density, or a maximum occupant load factor for egress purposes, greater than or equal to 25 people per 1000 ft^2 (40 square foot per person); and is either a single zone system with any controls or multiple zone systems with Direct Digital Controls (DDC) to the zone level.

2008 Nonresidential Compliance Forms — *August 2009*

05/03/13 PERMIT SET

3/27/2013 8:49:04 PM

SAN FRANCISCO OAKLAND BAY BRIDGE
EAST SPAN SEISMIC SAFETY PROJECT

IERBYS TEMPORARY IMPROVEMENTS - BUILDING

MECHANICAL TITLE 24

SHEET M004

Shahjahan Ali
DESIGN OVERSIGHT
03/27/13
SIGN OFF DATE

	BY	CHECKED
DESIGN	JAMES GRONEK	ROBERT C. NIXDORF
DETAILS	BY	CHECKED
QUANTITIES	BY	CHECKED

PREPARED FOR THE STATE OF CALIFORNIA DEPARTMENT OF TRANSPORTATION

KAREN Y. WANG
PROJECT ENGINEER

BRIDGE NO
POST MILES 2.0

DESIGN DETAIL SHEET (ENGLISH) (REV. 03/14/12)

ORIGINAL SCALE IN INCHES FOR REDUCED PLANS 0 1 2 3

UNIT: 04
PROJECT NUMBER AND PHASE:
CONTRACT NO.: 0120F4

DISREGARD PRINTS BEARING EARLIER REVISION DATES

REVISION DATES ___ ___ ___ ___

SHEET 46 OF 66

C:\Users\cschurr\Documents\56185_Gateway Park - Central_cschurr.rvt

DIST	COUNTY	ROUTE	POST MILES TOTAL PROJECT	SHEET No	TOTAL SHEETS
04	ALA	80	2.0	1204az	1204

JRGK
REGISTERED ENGINEER — DATE 03/27/13

PLANS APPROVAL DATE

REGISTERED PROFESSIONAL ENGINEER JAMES R. GRONEK No. M 34898 MECHANICAL STATE OF CALIFORNIA

The state of California or its officers or agents shall not be responsible for the accuracy or completeness of scanned copies of this plan sheet.

WSP • FLACK + KURTZ
405 HOWARD ST. #500
SAN FRANCISCO, CA 94106

SHEET NOTES

A. (X) DENOTES EXISTING EQUIPMENT TO BE REMOVED.

NUMBERED NOTES

1. REMOVE INTERNAL COMPONENTS OF WALL–MOUNTED SINGER AIR–COOLED HEAT PUMP UNITS. EXTERNAL CASING SHALL REMAIN TO MAINTAIN INTEGRITY OF BUILDING ENVELOPE AND ASSOCIATED WATERPROOFING.

1 DEMOLITION FLOOR PLAN
1/8"=1'-0"

05/03/13 PERMIT SET

N

3/27/2013 8:49:10 PM

SAN FRANCISCO OAKLAND BAY BRIDGE EAST SPAN SEISMIC SAFETY PROJECT

IERBYS TEMPORARY IMPROVEMENTS - BUILDING

MECHANICAL DEMOLITION FLOOR PLAN

SHEET M101

Shahjahan Ali
DESIGN OVERSIGHT

03/27/13
SIGN OFF DATE

	BY	CHECKED
DESIGN	JAMES GRONEK	ROBERT C. NIXDORF
DETAILS	BY	CHECKED
QUANTITIES	BY	CHECKED

PREPARED FOR THE STATE OF CALIFORNIA DEPARTMENT OF TRANSPORTATION

KAREN Y. WANG
PROJECT ENGINEER

BRIDGE NO

POST MILES 2.0

DESIGN DETAIL SHEET (ENGLISH) (REV. 03/14/12)

ORIGINAL SCALE IN INCHES FOR REDUCED PLANS 0 1 2 3

UNIT: 04
PROJECT NUMBER AND PHASE: CONTRACT NO.: 0120F4

DISREGARD PRINTS BEARING EARLIER REVISION DATES

REVISION DATES

SHEET 47 OF 66

C:\Users\cschurr\Documents\56185_Gateway Park - Central_cschurr.rvt

DIST	COUNTY	ROUTE	POST MILES TOTAL PROJECT	SHEET No	TOTAL SHEETS
04	ALA	80	2.0	1204ba	1204

JRGK
REGISTERED ENGINEER — DATE 03/27/13

PLANS APPROVAL DATE

REGISTERED PROFESSIONAL ENGINEER JAMES R. GRONEK No. M 34898 MECHANICAL STATE OF CALIFORNIA

The state of California or its officers or agents shall not be responsible for the accuracy or completeness of scanned copies of this plan sheet.

WSP • FLACK + KURTZ
405 HOWARD ST. #500
SAN FRANCISCO, CA 94106

SHEET NOTES

A. MAIN DISPLAY SPACE IS TO BE NATURALLY VENTILATED. OPERABLE WINDOW AREA IS TO BE A MINIMUM OF 640 SF. THIS AREA IS IN COMPLIANCE WITH THE REQUIREMENTS OF THE CALIFORNIA MECHANICAL CODE, CHAPTER 4, SECTION 4.2 AND TITLE 24 SECTION 121(b)1. REFER TO ARCHITECTURAL DRAWINGS FOR OPERABLE WINDOW LOCATIONS AND SIZES.

B. PROVIDE REMOTE CABLE-OPERATED DAMPERS FOR ALL VOLUME DAMPERS LOCATED OVER INACCESSIBLE CEILINGS. REFER TO DETAIL 5/M601. DAMPER CONTROLLER TO BE ACCESSILBE THROUGH THE FACE OF THE DIFFUSER.

C. COORDINATE LOCATION OF ALL EXPOSED CONDUIT ROUTING FOR THERMOSTATS WTIH ARCHITECT PRIOR TO INSTALLATION.

NUMBERED NOTES

1. 12ø TOILET EXHAUST UP IN (E) ROOF PENETRATION.
2. 4ø COMBUSTION AIR DUCT THROUGH NEW ROOF PENETRATION.
3. 12ø TOILET EXHAUST UP IN NEW ROOF PENETRATION.
4. TERMINATE TRANSFER DUCT WITH WMS BEHIND CURVED SOFFIT.
5. OPEN SLOT BEHIND LIGHT COVE. MINIMUM 4" HIGH BY 120' LONG. REFER TO ARCHITECTURAL DRAWINGS FOR ACTUAL DIMENSIONS.
6. RS/RL PIPING TO VRV FAN UNITS NOT SHOWN FOR CLARITY. PIPES ARE TO BE ROUTED ABOVE OFFICE HARD-LID CEILING.
7. 4ø VENT DUCT THROUGH NEW ROOF PENETRATION.
8. INACTIVE SECTION OF SLOT WITH LIGHT SHIELD. APPEARANCE TO MATCH ACTIVE SECTIONS.
9. PROVIDE A SHEET METAL RETURN PLENUM WITH 1" A.L. AND ONE ELBOW UP FOR THE VRV UNIT. RETURN PLENUM TO CONTAIN 1" MERV-8 FILTER RACK. TYPICAL ALL VRV FAN COIL UNITS.
10. 1 SF NFA INTAKE LOUVER WITH 14x48 BY 8 INCH DEEP PLENUM CONCEALED WITHIN WALL DEPTH. TAP PLENUM TOP FOR 14x6 DUCT TO FAN SUCTION CONNECTION.
11. 12ø DISCHARGE DUCT FROM SF-1-1. RUN DUCT TO DISTRIBUTE VENTILATION AIR TO RETURN AIR PLENUM OF FCU-1-1, FCU-1-2, AND FCU-1-3. CONNECTION TO EACH FCU RETURN AIR PLENUM SHALL BE 8ø BALANCED TO 135 CFM EACH.
12. 4" TALL CONCRETE PAD. ESTIMATED SIZE IS 86x42 CONTRACTOR SHALL COORDINATE PAD SIZE BASED ON REQUIREMENTS OF EQUIPMENT PURCHASED.
13. PROVIDE COMMON CONTROL FOR THREE HEATERS AS INDICATED.

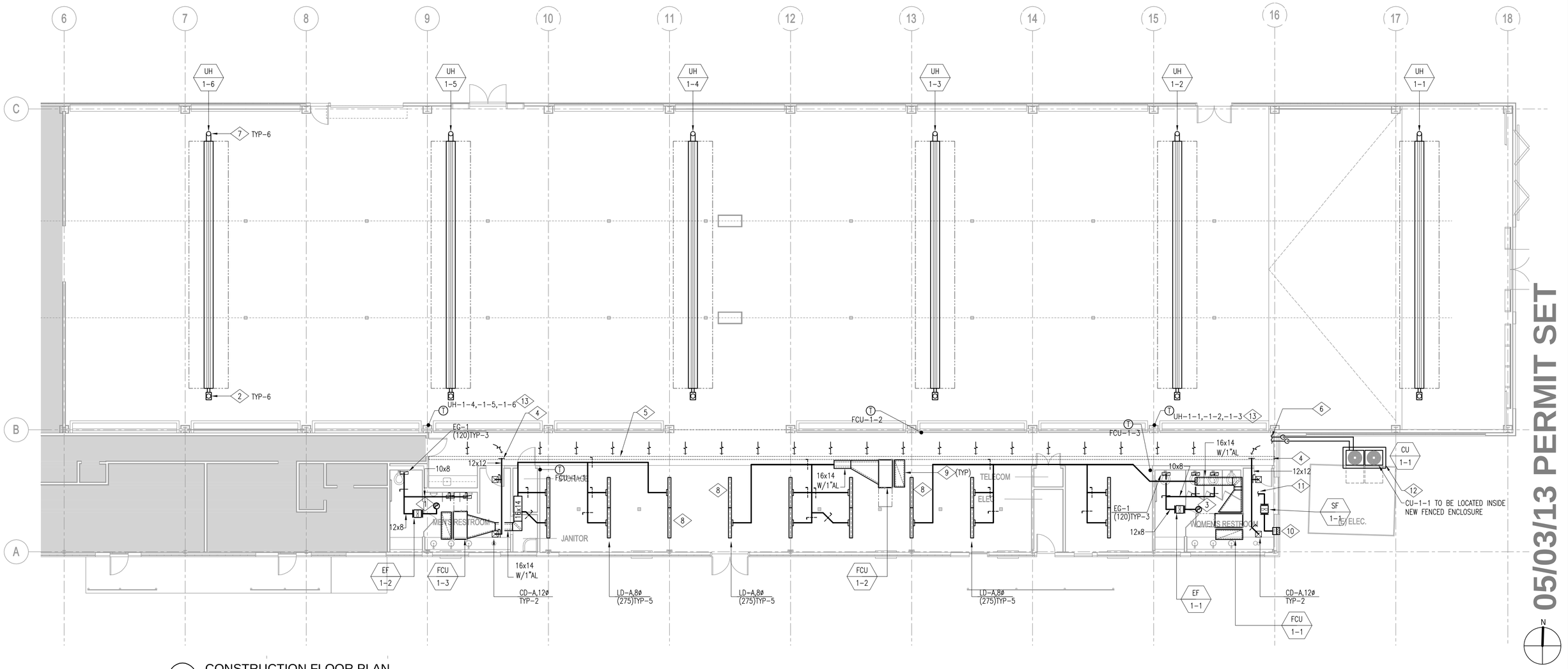

1 CONSTRUCTION FLOOR PLAN
1/8"=1'-0"

05/03/13 PERMIT SET

3/27/2013 8:49:15 PM

SAN FRANCISCO OAKLAND BAY BRIDGE EAST SPAN SEISMIC SAFETY PROJECT

IERBYS TEMPORARY IMPROVEMENTS - BUILDING

MECHANICAL CONSTRUCTION FLOOR PLAN

SHEET M201

Shahjahan Ali
DESIGN OVERSIGHT
03/27/13
SIGN OFF DATE

	BY	CHECKED
DESIGN	JAMES GRONEK	ROBERT C. NIXDORF
DETAILS	BY	CHECKED
QUANTITIES	BY	CHECKED

PREPARED FOR THE STATE OF CALIFORNIA DEPARTMENT OF TRANSPORTATION

KAREN Y. WANG
PROJECT ENGINEER

BRIDGE NO
POST MILES 2.0

DESIGN DETAIL SHEET (ENGLISH) (REV. 03/14/12)

ORIGINAL SCALE IN INCHES FOR REDUCED PLANS 0 1 2 3

UNIT: 04
PROJECT NUMBER AND PHASE:
CONTRACT NO.: 0120F4

DISREGARD PRINTS BEARING EARLIER REVISION DATES

REVISION DATES

SHEET 48 OF 66

C:\Users\cschurr\Documents\56185_Gateway Park - Central_cschurr.rvt

DIST	COUNTY	ROUTE	POST MILES TOTAL PROJECT	SHEET No	TOTAL SHEETS
04	ALA	80	2.0	1204bb	1204

JRGK
REGISTERED ENGINEER — DATE 03/27/13

PLANS APPROVAL DATE

REGISTERED PROFESSIONAL ENGINEER JAMES R. GRONEK No. M 34898 MECHANICAL STATE OF CALIFORNIA

The state of California or its officers or agents shall not be responsible for the accuracy or completeness of scanned copies of this plan sheet.

WSP • FLACK + KURTZ
405 HOWARD ST. #500
SAN FRANCISCO, CA 94106

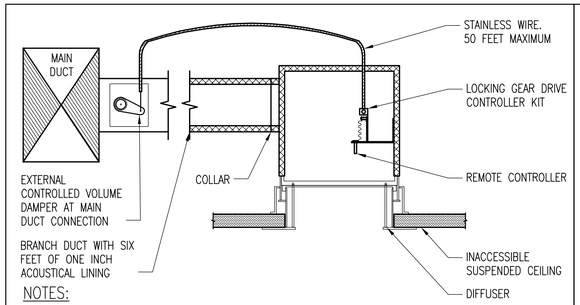

NOTES:

1. CONTROLLER INSTALLED INSIDE PLENUM AND ADJUSTED THROUGH THE DIFFUSER FACE.

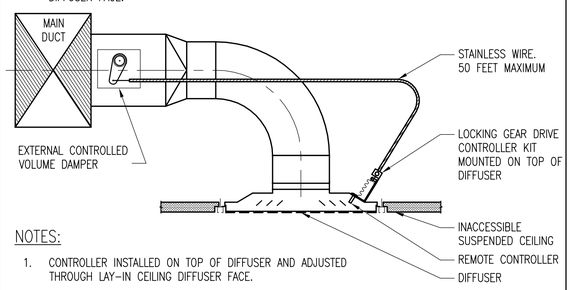

NOTES:

1. CONTROLLER INSTALLED ON TOP OF DIFFUSER AND ADJUSTED THROUGH LAY-IN CEILING DIFFUSER FACE.

5 REMOTE CABLE DAMPER CONTROLLER

NO SCALE

COIL TYPE	H1 (HEIGHT)	H2 (HEIGHT)
BLOW-THROUGH (LOCATED ON DISCHARGE SIDE OF FAN)	1" MINIMUM	POSITIVE STATIC PRESSURE AT DRAIN PAN IN INCHES TIMES 2 (2" MINIMUM)
DRAW-THROUGH (LOCATED ON SUCTION SIDE OF FAN)	NEGATIVE STATIC PRESSURE AT DRAIN PAN IN INCHES PLUS 1"	NEGATIVE STATIC PRESSURE AT DRAIN PAN IN INCHES PLUS 1"

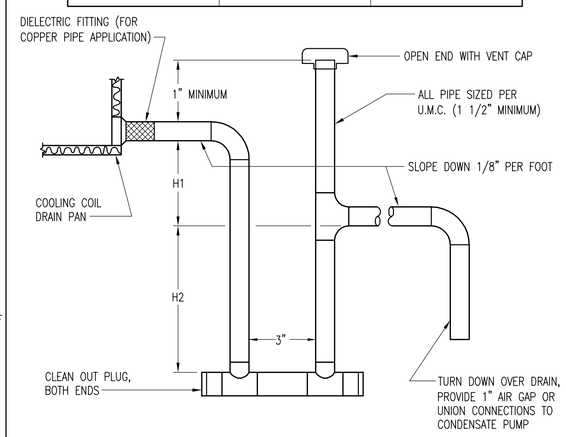

4 COOLING COIL CONDENSATE TRAP

NO SCALE

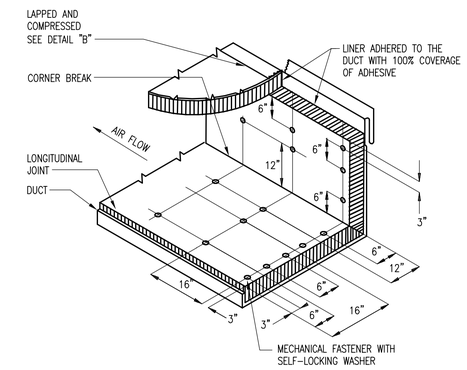

NOTES:

1. MECHANICAL FASTENERS ARE TO BE SPOT WELDED TO DUCTWORK.
2. PROVIDE SHEET METAL NOSING AS DESCRIBED IN SPECIFICATIONS.

2 ACOUSTICAL DUCT LINING DETAIL

NO SCALE

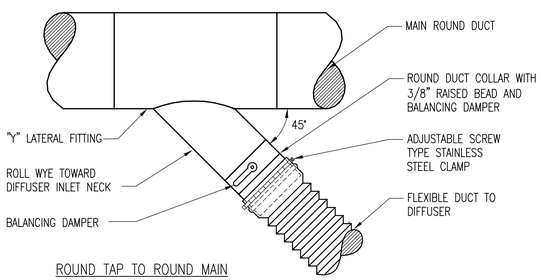

ROUND TAP TO ROUND MAIN

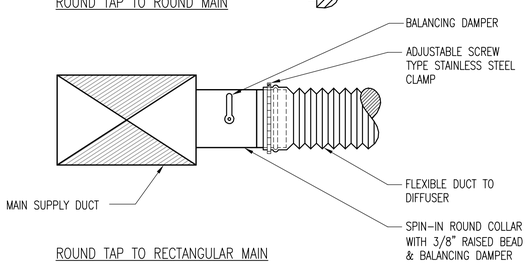

ROUND TAP TO RECTANGULAR MAIN (TAP SMALLER THAN MAIN)

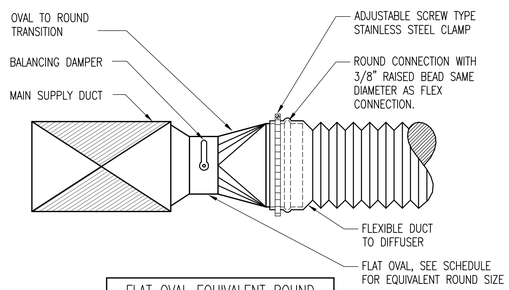

FLAT OVAL EQUIVALENT ROUND	
ROUND ø	FLAT OVAL INCHES
6"	4x9
7"	5x10
8"	6x11
10"	6x11
12"	7x20
14"	8x22
16"	8x30

ROUND TAP TO RECTANGULAR MAIN (TAP LARGER THAN MAIN)

3 LOW PRESSURE BRANCH DUCT CONNECTIONS

NO SCALE

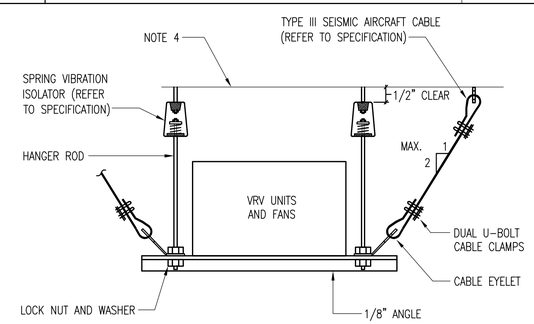

NOTES:

1. HANGER SPACING ALONG LENGTH OF UNIT TO BE AS FOLLOWS: MINIMUM – 2 HANGERS MAXIMUM SPACING 6'-0".
2. PROVIDE ADEQUATE SEISMIC CABLE BRACING TO RESIST MOTION IN ALL LATERAL DIRECTIONS.
3. REFER TO SMACNA SEISMIC RESTRAINT MANUAL GUIDELINES (LATEST EDITION) FOR MECHANICAL SYSTEMS.
4. ATTACH TO STRUCTURE ABOVE.

1 SUSPENDED EQUIPMENT WITH SEISMIC CABLES

NO SCALE

05/03/13 PERMIT SET

3/27/2013 8:49:21 PM

SAN FRANCISCO OAKLAND BAY BRIDGE
EAST SPAN SEISMIC SAFETY PROJECT

IERBYS TEMPORARY IMPROVEMENTS - BUILDING

MECHANICAL DETAILS

SHEET M601

Shahjahan Ali
DESIGN OVERSIGHT
03/27/13
SIGN OFF DATE

	BY	CHECKED
DESIGN	JAMES GRONEK	ROBERT C. NIXDORF
DETAILS	BY	CHECKED
QUANTITIES	BY	CHECKED

PREPARED FOR THE STATE OF CALIFORNIA DEPARTMENT OF TRANSPORTATION

KAREN Y. WANG
PROJECT ENGINEER

BRIDGE NO
POST MILES 2.0

DESIGN DETAIL SHEET (ENGLISH) (REV. 03/14/12)

ORIGINAL SCALE IN INCHES FOR REDUCED PLANS 0 1 2 3

UNIT: 04
PROJECT NUMBER AND PHASE:
CONTRACT NO.: 0120F4

DISREGARD PRINTS BEARING EARLIER REVISION DATES

REVISION DATES

SHEET 49 OF 66

C:\Users\cschurr\Documents\56185_Gateway Park - Central_cschurr.rvt

DIST	COUNTY	ROUTE	POST MILES TOTAL PROJECT	SHEET No	TOTAL SHEETS
04	ALA	80	2.0	1204bc	1204

REGISTERED ENGINEER — DATE 03/27/13

PLANS APPROVAL DATE

REGISTERED PROFESSIONAL ENGINEER ANDREW HARRINGTON No. E19367 ELECTRICAL STATE OF CALIFORNIA

The state of California or its officers or agents shall not be responsible for the accuracy or completeness of scanned copies of this plan sheet.

WSP • FLACK + KURTZ
405 HOWARD ST. #500
SAN FRANCISCO, CA 94106

ELECTRICAL LEGEND AND ABBREVIATIONS

FLOOR BOX LEGEND

RECESSED FLUSH	
	COMBINATION DUPLEX RECEPTACLE/TELECOM OUTLET: 125V

GENERAL ELECTRICAL NOTES

A. ARCHITECTURAL DRAWINGS TAKE PRECEDENCE OVER ENGINEERING DOCUMENTS FOR EXACT LOCATION, MOUNTING HEIGHTS AND SUSPENSION LENGTHS OF ALL ELECTRICAL EQUIPMENT.

B. THIS SET OF ELECTRICAL DRAWINGS SHOULD ACCOMPANY A WRITTEN SET OF DIVISION 26 SPECIFICATIONS WITH WHICH THE CONTRACTOR MUST COMPLY.

C. CONTRACTOR SHALL MAINTAIN A COMPLETE SET OF AS-BUILT DOCUMENTS THROUGHOUT CONSTRUCTION INDICATING CONDUIT ROUTING, JUNCTION BOX LOCATIONS AND ACTUAL CIRCUIT NUMBER USED AT EACH ELECTRICAL DEVICE. AS-BUILT DOCUMENTS SHALL ACCURATELY REFLECT NEW AND EXISTING CONDITIONS.

D. UPON PROJECT COMPLETION, PROVIDE TWO SETS OF ALL AS-BUILT DOCUMENTS TO OWNER AND BUILDING ENGINEER.

E. PROVIDE ACCURATE, TYPEWRITTEN, UPDATED PANELBOARD DIRECTORIES FOR ALL AFFECTED PANELS. INDICATE NEW AND EXISTING CIRCUITS AS WELL AS SPARE CIRCUITS AND BREAKER SPACES. TURN "OFF" ALL SPARE BREAKERS.

F. CONNECT NEW FIRE ALARM DEVICES TO NEW VOICE EVACUATION FIRE ALARM SYSTEM.

G. TELECOMMUNICATIONS, AV, AND SECURITY CABLING PROVIDED BY OTHERS. ELECTRICAL CONTRACTOR TO PROVIDE AND COORDINATE RACEWAY, CABLE TRAY, BOX AND POWER REQUIREMENTS WITH VENDORS.

H. PRIOR TO THE SUBMITTING OF BIDS, VISIT THE PROJECT SITE AND BECOME FAMILIAR WITH ALL CONDITIONS AFFECTING THE PROPOSED INSTALLATION AND MAKE PROVISIONS AS TO THE COST THEREOF.

I. EXISTING ELECTRICAL SERVICES NOT SPECIFICALLY INDICATED TO BE REMOVED OR ALTERED SHALL REMAIN AS THEY PRESENTLY EXIST.

J. WHERE EXISTING SERVICES INTERFERE WITH NEW CONSTRUCTION, ALTER OR REROUTE SUCH EXISTING EQUIPMENT TO FACILITATE NEW CONSTRUCTION AFTER OBTAINING WRITTEN PERMISSION FROM THE ARCHITECT. NOTIFICATION IN WRITING GIVING TWO WEEKS ADVANCE NOTICE OF PLANNED ALTERATION IS REQUIRED.

K. PRESERVE CONTINUITY OF SERVICE OF EXISTING FACILITIES (RELATED TO DAMAGE OR ALTERATION DUE TO NEW CONSTRUCTION). UNAUTHORIZED ALTERATION TO EXISTING EQUIPMENT SHALL BE CORRECTED WITHOUT ADDITIONAL COST TO THE OWNER.

L. WHERE A CIRCUIT IS INTERRUPTED BY REMOVAL OF A DEVICE OR FIXTURE FROM THAT CIRCUIT, PROVIDE ADDITIONAL CONDUIT AND WIRE TO RESTORE SERVICE TO THE REMAINING DEVICES AND FIXTURES ON THAT CIRCUIT.

M. ELECTRICAL EQUIPMENT TO BE REMOVED THAT IS IN GOOD WORKING ORDER SHALL BE CAREFULLY REMOVED AND OFFERED TO THE OWNER. ITEMS REJECTED BY THE OWNER SHALL BE REMOVED FROM THE PROJECT SITE AND PROPERLY DISPOSED OF.

N. THE CONTRACT DOCUMENTS DO NOT MAKE REPRESENTATIONS REGARDING THE CHARACTER OR EXTENT OF THE EXISTING STRUCTURAL, MECHANICAL AND ELECTRICAL INSTALLATIONS, WHICH MAY BE ENCOUNTERED DURING THE WORK. EVALUATE EXISTING CONDITIONS, WHICH MAY AFFECT METHODS OR COST OF PERFORMING THE WORK, BASED ON EXAMINATION OF THE SITE OR OTHER INFORMATION. FAILURE TO EXAMINE THE DRAWINGS OR OTHER INFORMATION DOES NOT RELIEVE THE CONTRACTOR OF RESPONSIBILITY FOR THE SATISFACTORY COMPLETION OF THE WORK.

WIRING DEVICE LEGEND

	DUPLEX RECEPTACLE OUTLET: 125V; WALL MOUNTED
	DUPLEX RECEPTACLE OUTLET: 125V TOP HALF SWITCHED
	DUPLEX RECEPTACLE OUTLET: 125V, DEDICATED; WALL MOUNTED
	DOUBLE DUPLEX RECEPTACLE OUTLET: 125V; WALL MOUNTED
	SPECIAL PURPOSE RECEPTACLE OUTLET: RATING AS INDICATED; WALL MOUNTED
	CLOCK RECEPTACLE OUTLET: 125V, 15A
	POWER CONNECTION TO ELECTRIFIED FURNITURE SYSTEM
	DUPLEX RECEPTACLE OUTLET: 125V; CEILING MOUNTED
	DUPLEX RECEPTACLE OUTLET: 125V, DEDICATED; CEILING MOUNTED
	DOUBLE DUPLEX RECEPTACLE OUTLET: 125V; CEILING MOUNTED
	SPECIAL PURPOSE RECEPTACLE OUTLET: RATING AS INDICATED; CEILING MOUNTED
	PUSH BUTTON
B	BUZZER
B	BELL
	POWER TYPE PLUGSTRIP OR SURFACE RACEWAY, LENGTH APPROXIMATELY AS SHOWN
	POWER/TELECOM TYPE PLUGSTRIP OR SURFACE RACEWAY, LENGTH APPROXIMATELY AS SHOWN
	TELECOM OUTLET
	TELECOM CONNECTION TO ELECTRIFIED FURNITURE SYSTEM
$	SINGLE POLE SWITCH
$2	DOUBLE POLE SWITCH
$3	THREE WAY SWITCH
$4	FOUR WAY SWITCH
$F	FAN SWITCH
$H	ILLUMINATED HANDLE SWITCH
$K	KEY SWITCH
$MC	MOMENTARY CONTACT SWITCH
TS	TIMER SWITCH
D	WALL DIMMER
LV	LOW VOLTAGE SWITCH
PC	PHOTOCELL
OS	OCCUPANCY SENSOR; WALL MOUNTED
OS	2 WAY OCCUPANCY SENSOR; CEILING MOUNTED
OS	1 WAY OCCUPANCY SENSOR; CEILING MOUNTED
OS	CORRIDOR OCCUPANCY SENSOR; CEILING MOUNTED

FIRE ALARM LEGEND

P	MANUAL PULL STATION
	AREA SMOKE DETECTOR, CEILING MOUNTED (SMOKE DETECTOR, SEMI-FLUSH MOUNTED IN CEILING)
	AREA SMOKE DETECTOR, WALL MOUNTED
	DUCT TYPE SMOKE DETECTOR
	HEAT DETECTOR, CEILING MOUNTED
BR BT	BEAM DETECTOR: R = RECEIVER, T = TRANSMITTER
W	SPRINKLER WATER FLOW SWITCH
T	SPRINKLER TAMPER SWITCH
S	FIRE ALARM SPEAKER; CEILING MOUNTED
S	FIRE ALARM SPEAKER; WALL MOUNTED
S	COMBINATION FIRE ALARM SPEAKER/VISUAL ALARM; WALL MOUNTED
S	COMBINATION FIRE ALARM SPEAKER/VISUAL ALARM; CEILING MOUNTED
	VISUAL ALARM; CEILING MOUNTED
	VISUAL ALARM; WALL MOUNTED
H	MAGNETIC DOOR HOLDER
	FIRE ALARM BELL
FSD	FIRE/SMOKE DAMPER
SD	SMOKE DAMPER
FACP	FIRE ALARM AND CONTROL PANEL
FARP	FIRE ALARM REMOTE PANEL
FATC	FIRE ALARM TERMINAL CABINET
FARA	FIRE ALARM REMOTE ANNUNCIATOR

WIRING DEVICE SUBSCRIPT LEGEND

AC	AC = ABOVE COUNTER
GFI	GFI = GROUND FAULT INTERRUPTER
WP	WP = WEATHERPROOF
MW	MW = MICROWAVE
a	a = LOWER CASE LETTER INDICATES SWITCH CONTROL
27	27 = NUMBER INDICATES CIRCUIT NUMBER
IG	IG = ISOLATED GROUND (ONE OF DOUBLE DUPLEX)
$a	a = LOWER CASE INDICATES SWITCH CONTROL

POWER LEGEND

	ELECTRICAL DISTRIBUTION EQUIPMENT, SIZE APPROX. AS SHOWN. DOUBLE LINE INDICATES FRONT.
	SURFACE MOUNTED EQUIPMENT, SIZE APPROXIMATELY AS SHOWN
	RECESSED MOUNTED EQUIPMENT, SIZE APPROXIMATELY AS SHOWN
	SURFACE MOUNTED 120/208V PANELBOARD, SIZE APPROXIMATELY AS SHOWN
	RECESSED MOUNTED 120/208V PANELBOARD, SIZE APPROXIMATELY AS SHOWN
T F	STEP DOWN TRANSFORMER
	HEAVY DUTY DISCONNECT SWITCH
	HEAVY DUTY DISCONNECT SWITCH WITH FUSE
	MOTOR STARTER
	MOTOR STARTER, NOT PROVIDED UNDER ELECTRICAL SCOPE
	COMBINATION MOTOR STARTER/DISCONNECT SWITCH
	COMBINATION MOTOR STARTER/DISCONNECT SWITCH, NOT PROVIDED UNDER ELECTRICAL SCOPE
VFD	VFD WITH DISCONNECT, NOT PROVIDED UNDER ELECTRICAL SCOPE
VFD	VFD WITHOUT DISCONNECT, NOT PROVIDED UNDER ELECTRICAL SCOPE
$MD	MOTORIZED DOOR CONTROLLER (FURNISHED WITH DOOR)
$MS	MOTORIZED SHADE CONTROLLER (FURNISHED WITH SHADES)
$PS	PROJECTION SCREEN CONTROLLER (FURNISHED WITH SCREEN)
$SC	SPEED CONTROLLER (FURNISHED WITH EQUIPMENT)
$T	THERMAL OVERLOAD/DISCONNECT SWITCH
M	MOTOR CONNECTION
J	JUNCTION BOX, CEILING MOUNTED
J	JUNCTION BOX, WALL MOUNTED
P B	PULL BOX
G	GROUND BUS CABINET
	CIRCUIT BREAKER
	SWITCH AND FUSE
	CIRCUIT BREAKER IN ENCLOSURE
	NORMALLY OPEN CONTACT
	NORMALLY CLOSED CONTACT
	RELAY OR CONTACTOR: CONTACTS SHOWN WITH COIL DEENERGIZED
	TRANSFORMER

SF-1 — EQUIPMENT DESIGNATION
MCC-1A — POWER SOURCE

LIGHTING LEGEND

	LIGHTING FIXTURE; CEILING MOUNTED
	LIGHTING FIXTURE; WALL MOUNTED
	LIGHTING FIXTURE, SIZE APPROXIMATELY AS SHOWN; CEILING MOUNTED
	LIGHTING FIXTURE, SIZE APPROXIMATELY AS SHOWN; WALL MOUNTED
	EMERGENCY LIGHTING FIXTURE WITH BATTERY BACKUP
	LIGHTING FIXTURE, CONTINUOUS ROW; CEILING MOUNTED
	LIGHTING FIXTURE, WALL WASHER; CEILING MOUNTED
	LIGHTING FIXTURE(S); POLE MOUNTED
2 a A	LIGHTING FIXTURE SUBSCRIPTIONS: NUMBER INDICATES CIRCUIT, LOWERCASE LETTER INDICATES SWITCH CONTROL UPPERCASE LETTER INDICATES FIXTURE TYPE
	LIGHTING TRACK WITH FIXTURES, LENGTH APPROXIMATELY AS SHOWN
EXIT SIGNS	ARROWS AS SHOWN, ILLUMINATED FACE AS INDICATED BY SHADING, CONNECT TO EMERGENCY POWER SYSTEM
	EXIT SIGN; WALL MOUNTED
	EXIT SIGN; CEILING MOUNTED
P	EXIT SIGN; PENDENT MOUNTED
L	EXIT SIGN, LOW LEVEL; RECESSED IN WALL

RACEWAY LEGEND

	CONDUIT CONCEALED ABOVE CEILING OR WITHIN WALL
	CONDUIT BELOW GRADE OR EMBEDDED WITHIN SLAB
	CONDUIT UP
	CONDUIT DOWN
	CONDUIT STUBBED OUT WITH BUSHING NOTE: PROVIDE PULLSTRING IN EACH EMPTY RACEWAY
E	CONDUIT STUBBED OUT AND CAPPED NOTE: PROVIDE PULLSTRING IN EACH EMPTY RACEWAY
AV	AUDIO/VISUAL SYSTEM RACEWAY
FA	FIRE ALARM SYSTEM RACEWAY
	CONDUIT HOMERUN, MAXIMUM OF (3) BRANCH CIRCUITS, UON NOTE: MAXIMUM OF THREE BRANCH CIRCUITS FOR EACH HOMERUN, UON

EQUIPMENT NAMING LEGEND

P1 / 1,3,5 — CIRCUIT NUMBER(S)
PANEL NAME

ABBREVIATIONS

℄	CENTER LINE
AFF	ABOVE FINISHED FLOOR
AIC	AMPERES INTERRUPTING CAPACITY
AF/AS	AMPERE RATING OF FUSE/SWITCH
AT/AF	AMPERE RATING OF CIRCUIT, BREAKER TRIP/FRAME
A/V	AUDIO/VISUAL
BMS	BUILDING MANAGEMENT SYSTEM
CKT	CIRCUIT
DPDT	DOUBLE POLE DOUBLE THROW
DPST	DOUBLE POLE SINGLE THROW
(E)	EXISTING TO REMAIN
EC	EMPTY CONDUIT
ELV	ELECTRONIC LOW VOLTAGE
EMT	ELECTRICAL METALLIC TUBING
FCC	FIRE CONTROL CENTER
GFI	GROUND FAULT INTERRUPTOR
GND	GROUND
INV	INVERTER
IG	ISOLATED GROUND
LRC	LIGHTING RELAY CABINET
MCP	MOTOR CIRCUIT PROTECTOR
MIC	MINERAL INSULATED CABLE
MS	MAIN SWITCHBOARD
(N)	NEW
NC	NORMALLY CLOSED
NO	NORMALLY OPEN
NTS	NOT TO SCALE
PVC	POLYVINYL CHLORIDE CONDUIT
(R)	EXISTING TO BE RELOCATED
RAC	RIGID ALUMINUM CONDUIT
RSC	RIGID STEEL CONDUIT
SCC	SECURITY CONTROL CENTER
SPDT	SINGLE POLE DOUBLE THROW
SPST	SINGLE POLE SINGLE THROW
TEL	TELECOM
TVSS	TRANSIENT VOLTAGE SURGE SURPRESSION
TYP	TYPICAL
UH	UNIT HEATER
UON	UNLESS OTHERWISE NOTED
UPS	UNINTERRUPTIBLE POWER SUPPLY
WP	WEATHERPROOF
WT	WATERTIGHT
(X)	EXISTING TO BE REMOVED
XP	EXPLOSION PROOF

05/03/13 PERMIT SET

3/27/2013 8:46:58 PM

SAN FRANCISCO OAKLAND BAY BRIDGE
EAST SPAN SEISMIC SAFETY PROJECT

Jaswinder Gill
DESIGN OVERSIGHT
03/27/13
SIGN OFF DATE

	BY	CHECKED
DESIGN	ANDREW HARRINGTON	ROBERT C. NIXDORF
DETAILS	BY	CHECKED
QUANTITIES	BY	CHECKED

PREPARED FOR THE
STATE OF CALIFORNIA
DEPARTMENT OF TRANSPORTATION

KAREN Y. WANG
PROJECT ENGINEER

BRIDGE NO
POST MILES 2.0

IERBYS TEMPORARY IMPROVEMENTS - BUILDING
ELECTRICAL LEGEND AND ABBREVIATIONS

SHEET E000

DESIGN DETAIL SHEET (ENGLISH) (REV. 03/14/12)

ORIGINAL SCALE IN INCHES FOR REDUCED PLANS 0 1 2 3

UNIT: 04
PROJECT NUMBER AND PHASE:
CONTRACT NO.: 0120F4

DISREGARD PRINTS BEARING EARLIER REVISION DATES

REVISION DATES

SHEET 50 OF 66

C:\Users\cschurr\Documents\56185_Gateway Park - Central_cschurr.rvt

DIST	COUNTY	ROUTE	POST MILES TOTAL PROJECT	SHEET No	TOTAL SHEETS
04	ALA	80	2.0	1204bd	1204

REGISTERED ENGINEER DATE 03/27/13

PLANS APPROVAL DATE

REGISTERED PROFESSIONAL ENGINEER ANDREW HARRINGTON No. E19367 ELECTRICAL STATE OF CALIFORNIA

The state of California or its officers or agents shall not be responsible for the accuracy or completeness of scanned copies of this plan sheet.

WSP • FLACK + KURTZ
405 HOWARD ST. #500
SAN FRANCISCO, CA 94106

CERTIFICATE OF COMPLIANCE (Part 3 of 4) LTG-1C

Project Name: *IERBYS TEMPORAQRY IMPROVEMENTS* Date: *3/15/2013*

INDOOR LIGHTING SCHEDULE and FIELD INSPECTION ENERGY CHECKLIST

Fill in controls for all spaces: a) area controls, b) multi-level controls, c) manual daylighting controls for daylit areas > 250 ft², automatic daylighting controls for daylit areas > 2,500 ft², d) shut-off controls, e) display lighting controls, f) tailored lighting controls – general lighting controlled separately from display, ornamental and display case lighting and g) demand responsive automatic controls for retail stores > 50,000 ft², in accordance with Section 131.

MANDATORY LIGHTING CONTROLS – FIELD INSPECTION ENERGY CHECKLIST

Type/ Description	Number of Units	Location in Building	Special Features	Field Inspector Pass	Field Inspector Fail
			☐	☐	☐
			☐	☐	☐
			☐	☐	☐
			☐	☐	☐
			☐	☐	☐
			☐	☐	☐
			☐	☐	☐
			☐	☐	☐
			☐	☐	☐
			☐	☐	☐
			☐	☐	☐
			☐	☐	☐
			☐	☐	☐
			☐	☐	☐
			☐	☐	☐
			☐	☐	☐
			☐	☐	☐
			☐	☐	☐
			☐	☐	☐
			☐	☐	☐
			☐	☐	☐
			☐	☐	☐
			☐	☐	☐
			☐	☐	☐

SPECIAL FEATURES INSPECTION CHECKLIST (See Page 2 of 4 of LTG-1C)

The local enforcement agency should pay special attention to the items specified in this checklist. These items require special written justification and documentation, and special verification. The local enforcement agency determines the adequacy of the justification, and may reject a building or design that otherwise complies based on the adequacy of the special justification and documentation submitted.

Field Inspector's Notes or Discrepancies:

CERTIFICATE OF COMPLIANCE (Part 2 of 4) LTG-1C

Project Name: *IERBYS TEMPORAQRY IMPROVEMENTS* Date: *3/15/2013*

INDOOR LIGHTING SCHEDULE and FIELD INSPECTION ENERGY CHECKLIST

Installation Certificate, LTG-1- INST (Retain a copy and verify form is completed and signed.) **Field Inspector** ☐

Certificate of Acceptance, LTG-2A and LTG-3A (Retain a copy and verify form is completed and signed.) **Field Inspector** ☐

A separate Lighting Schedule Must Be Filled Out for Conditioned and Unconditioned Spaces Installed Lighting Power listed on this Lighting Schedule is only for:

☑ **CONDITIONED SPACE** ☐ **UNCONDITIONED SPACE**

☑ The actual indoor lighting power listed below includes all installed permanent and portable lighting systems in accordance with §146(a).

☑ Only for offices: Up to the first 0.2 watts per square foot of portable lighting shall not be required to be included in the calculation of actual indoor lighting power density in accordance with the Exception to §146(a). All portable lighting in excess of 0.2 watts per square foot is totaled below.

A: None or Item Tag	B: Luminaire (Type, Lamps, Ballasts) – Complete Luminaire Description[1] (i.e, 3 lamp fluorescent troffer, F32T8, one dimmable electronic ballasts)	C	D: Watts per Luminaire[1]	E: How wattage Was determined – CEC Default From NA8	E: According To §130 (d or e)	F: Number of Luminaires	G: Installed Watts (D X F)	H: Field Inspector[2] Pass	H: Fail
EXISTING	*EXISTING - Medium Base Pendant Fixture*		60.0	☑	☐	10	600	☐	☐
F1	*F1 - (4) 28W Linear Fluorescent T5 Elec, (3)12.2W MR16*		162.0	☑	☐	10	1,620	☐	☐
F2	*F2/F2d - 20W LED Downlight*		20.0	☑	☐	15	300	☐	☐
F3	*F3 - (1) 28W Linear Fluorescent T5 Elec*		30.0	☑	☐	6	180	☐	☐
F4	*F4 - 10W LED Downlight*		10.0	☑	☐	8	80	☐	☐
F5	*F5 - (1) 28W Linear Fluorescent T5 Elec*		30.0	☑	☐	35	1,050	☐	☐
F6	*F6 - Track Lighting, 120V * Amps of OCP Device*		120.0	☑	☐	180	21,600	☐	☐
F7	*F7 - LED Undercabinet Light, 8W/linear ft*		8.0	☑	☐	8	64	☐	☐
F8	*F8 - Linear LED Strip, 3.2W/linear ft*		3.2	☑	☐	108	346	☐	☐
FX3	*FX3 - Linear LED Light, 17W/linear ft*		17.0	☑	☐	32	544	☐	☐
W1	*W1 - (1) 28W Linear Fluorescent T5 Elec*		30.0	☑	☐	3	90	☐	☐
W2	*W2 - (2) 28W Linear Fluorescent T5 Elec*		60.0	☑	☐	1	60	☐	☐
				☐	☐			☐	☐
				☐	☐			☐	☐
				☐	☐			☐	☐
				☐	☐			☐	☐
				☐	☐			☐	☐
				☐	☐			☐	☐
				☐	☐			☐	☐
				☐	☐			☐	☐

Installed Watts Page Total: 26,534

Building total number of pages: | Installed Watts Building Total (Sum of all pages) Enter into LTG-1C Page 4 of 4: 26,534

1. Wattage shall be determined according to Section 130 (d and e). Wattage shall be rating of light fixture, not rating of bulb.
2. If Fail then describe on Page 2 of the Inspection Checklist Form and take appropriate action to correct. Verify building plans if necessary.

CERTIFICATE OF COMPLIANCE (Part 1 of 4) LTG-1C

Project Name: *IERBYS TEMPORAQRY IMPROVEMENTS* Date: *3/15/2013*

Project Address	Climate Zone	Total Cond. Floor Area	Unconditioned Floor Area
210 BURMA ROAD OAKLAND	*3*	*15,700*	*0*

GENERAL INFORMATION

Building Type: ☑ Nonresidential ☐ High-Rise Residential ☐ Hotel/Motel Guest Room ☐ School ☐ Relocatable Public School ☑ Conditioned Spaces ☐ Unconditioned Spaces

Phase of Construction: ☐ New Construction ☐ Addition ☑ Alteration

Method of Compliance: ☐ Complete Building ☑ Area Category ☐ Tailored

Documentation Author's Declaration Statement

I certify that this Certificate of Compliance documentation is accurate and complete. Signature

Name: *ANDREW HARRINGTON*
Company: *WSP Flack+Kurtz* Date: *3/15/2013*
Address: *405 HOWARD ST STE 500* CEA # / CEPE #
City/State/Zip: *SAN FRANCISCO, CA 94105* Phone: *(415) 398-3833*

The Principal Lighting Designer's Declaration Statement

- I am eligible under Division 3 of the California Business and Professional Code to accept responsibility for the lighting design.
- This Certificate of Compliance identifies the lighting features and performance specifications required for compliance with Title 24, Pages 1 and 6 of the California Code of Regulations.
- The design features represented on this Certificate of Compliance are consistent with the information provided to document this design on the other applicable compliance forms, worksheets, calculations, plans and specifications submitted to the enforcement agency for approval with this building permit application.

Name: *ANDREW HARRINGTON* Signature
Company: *WSP FLACK + KURTZ* Phone: *415.398.3833*
Address: *405 HOWARD STREET* License #: E19367
City/State/Zip: *SAN FRANCISCO , CA 94105* Date: 02/15/2013

Lighting Mandatory Measures
Indicate location on building plans of Mandatory Measures Note Block: THIS SHEET

LIGHTING COMPLIANCE FORMS & WORKSHEETS (check box if worksheets is included)

For detailed instructions on the use of this and all Energy Efficiency Standards compliance forms; please refer to the Nonresidential Manual published by the California Energy Commission.

	Form	Description
☑	LTG-1C Pages 1 through 4	Certificate of Compliance. All Pages required on plans for all submittals.
☑	LTG-2C	Lighting Controls Credit Worksheet
☑	LTG-3C	Indoor Lighting Power Allowance
☐	LTG-4C Pages 1 through 4	Tailored Method Worksheet
☐	LTG-5C Pages 1 and 2	Line Voltage Track Lighting Worksheet

LIGHTING MANDATORY MEASURES: NONRESIDENTIAL LTG-MM

Project Name: *IERBYS TEMPORAQRY IMPROVEMENTS* Date: *3/15/2013*

Indoor Lighting Measures:

§131(d): **Shut-off Controls**

1. For every floor, all interior lighting systems shall be equipped with a separate automatic control to shut off the lighting. This automatic control shall meet the requirements of Section 119 and may be an occupancy sensor, automatic time switch, or other device capable of automatically shutting off the lighting.
2. Override for Building Lighting Shut-off: The automatic building shut-off system is provided with a manual, accessible override switch in sight of the lights. The area of override is not to exceed 5,000 square feet.

§119(h): Automatic Control Devices Certified: All automatic control devices specified are certified, all alternate equipment shall be certified and installed as directed by the manufacturer.

§111: Fluorescent Ballast and Luminaires Certified: All fluorescent fixtures specified for the project are certified and listed in the Directory. All installed fixtures shall be certified.

§131(a): Individual Room/Area Controls: Each room and area in this building is equipped with a separate switch or occupancy sensor device for each area with floor-to-ceiling walls.

§131(b): Uniform Reduction for Individual Rooms: All rooms and areas greater than 100 square feet and more than 0.8 watts per square foot of lighting load shall be controlled with bi-level switching for uniform reduction of lighting within the room.

§131(c): Daylight Area Control: All rooms with windows and skylights that are greater than 250 square feet and that allow for the effective use of daylight in the area shall have 50% of the lamps in each daylit area controlled by a separate switch; or the effective use of daylight cannot be accomplished because the windows are continuously shaded by a building on the adjacent lot. Diagram of shading during different times of the year is included on plans.

§131(c): Display Lighting. Display lighting shall be separately switched on circuits that are 20 amps or less.6.

Outdoor Lighting Measures:

§130(c)1: Mandatory lighting power determination for medium base sockets without permanently installed ballasts

§132(a): All permanently installed luminaires with lamps rated over 100 Watts either have a lamp efficacy of at least 60 lumens per Watt or are controlled by a motion sensor.

§132(b): All Luminaires with lamps rated greater than 175 Watts in hardscape area, including parking lots, building entrances, canopies, and all outdoor sales areas meet the Cutoff Requirements.

§132(c)1: All permanently installed outdoor lighting meets the control requirements listed.

§132(c): Building facades, parking lots, garages, canopies, and outdoor sales areas meet the Multi-Level Lighting Requirements listed.

INDOOR LIGHTING POWER ALLOWANCE LTG-3C

Project Name: *IERBYS TEMPORAQRY IMPROVEMENTS* Date: *3/15/2013*

ALLOWED LIGHTING POWER (Chose One Method)

A Separate LTG-3C must be filled out for Conditioned and Unconditioned Spaces. Indoor Lighting Power Allowances listed on this page are only for:
☑ CONDITIONED SPACES ☐ UNCONDITIONED SPACES

COMPLETE BUILDING METHOD

BUILDING CATEGORY (From §146 Table 146-E)	WATTS PER (ft²)	X	COMPLETE BLDG. AREA	=	ALLOWED WATTS
TOTALS			**AREA**		**WATTS**

AREA CATEGORY METHOD

BUILDING CATEGORY (From §146 Table 146-F)	WATTS PER (ft²)	X	Area ft²	=	ALLOWED WATTS
Exhibit, Museum	2.00		12,866		25,732
Corridor/Restroom/Support	0.60		758		455
Convention/Conference/Meeting	1.40		1,997		2,796
Mechanical Equipment Room	0.70		79		55
TOTALS			15,700		29,038
			AREA		**WATTS**

TAILORED METHOD

Total Allowed Watts using the Tailored Method taken from LTG-4C (Page 1 of 4) Row 3: 0

The indoor lighting power allowance using the Tailored Method of compliance shall be determined using the LTG-4C set of forms. A separate set of LTG-4C forms shall be filled out for CONDITIONED and UNCONDITIONED spaces

CERTIFICATE OF COMPLIANCE (Part 4 of 4) LTG-1C

Project Name: *IERBYS TEMPORAQRY IMPROVEMENTS* Date: *3/15/2013*

CONDITIONED AND UNCONDITIONED SPACE LIGHTING MUST NOT BE COMBINED FOR COMPLIANCE

Indoor Lighting Power for Conditioned Spaces	Watts	Indoor Lighting Power for Unconditioned Spaces	Watts
Installed Lighting (from Conditioned LTG-1C, Page 2)	26,534	**Installed** Lighting (from Unconditioned LTG-1C, Page 2)	0
Lighting Control Credit Conditioned Spaces (from LTG-2C) -	0	Lighting Control Credit Unconditioned Spaces (from LTG-2C) -	0
Adjusted **Installed** Lighting Power =	26,534	Adjusted **Installed** Lighting Power =	0
Complies if **Installed** ≤ **Allowed**	↕	Complies if **Installed** ≤ **Allowed**	↕
Allowed Lighting Power Conditioned Spaces (from LTG-3C or PERF-1)	29,038	**Allowed** Lighting Power Unconditioned Spaces (from LTG-3C)	0

Required Acceptance Tests

Designer:

This form is to be used by the designer and attached to the plans. Listed below is the acceptance test for the Lighting system, **LTG-2A and LTG-3A**. The designer is required to check the acceptance tests and list all control devices serving the building or space shall be certified as meeting the Acceptance Requirements for Code Compliance. If all the lighting system or control of a certain type requires a test, list the different lighting and the number of systems. The NA7 Section in the Appendix of the Nonresidential Reference Appendices Manual describes the test. Since this form will be part of the plans, completion of this section will allow the responsible party to budget for the scope of work appropriately. **Forms can be grouped by type of Luminaire controlled.**

Enforcement Agency:

Systems Acceptance. Before Occupancy Permit is granted for a newly constructed building or space or when ever new lighting system with controls is installed in the building or space shall be certified as meeting the Acceptance Requirements. The **LTG-2A and LTG-3A** forms are not considered complete forms and are not to be accepted by the enforcement agency unless the boxes are checked and/or filled and signed. In addition, a Certificate of Acceptance forms shall be submitted to the enforcement agency that certifies plans, specifications, installation certificates, and operating and maintenance information meet the requirements of §10-103(b) of Title 24 Part 6. The field inspector must receive the properly filled out and signed forms before the building can receive final occupancy. A copy of the **LTG-2A and LTG-3A** for each different lighting luminaire control(s) must be provided to the owner of the building for their records.

Luminaires Controlled: Equipment Requiring Testing	Description	Number of Luminaires controlled	Location	LTG-2A and LTG-3A: Controls and Sensors and Automatic Daylighting Controls Acceptance
				☐
				☐
				☐
				☐
				☐
				☐
				☐
				☐
				☐
				☐
				☐
				☐
				☐
				☐
				☐
				☐

LIGHTING FIXTURE SCHEDULE

TYPE	DESCRIPTION	MANUFACTURER CATALOG NUMBER	LAMP DESCRIPTION	LAMP WATTS	LAMP QTY	INPUT VOLTS	FIXTURE INPUT WATTS	REMARKS
F1	DIMMABLE LINEAR FLUORESCENT DOWNLIGHT WITH LENS AND (3) MR16 LED ACCENT LIGHTS	SEE 26 50 00	(4) 28W T5 (3) 12.2W MR16 LED SEE 26 51 00	28 12.2	4 3	120	162	(2) T5 LAMP IN CROSS–SECTION, (4) T5 LAMPS TOTAL WITH LED SPOT IN THE MIDDLE AND AT EACH END, PROVIDE INTEGRAL BATTERY BALLAST FOR ONE LAMP WHERE INDICATED
F2/F2d	RECESSED ADJUSTABLE LED DOWNLIGHT	SEE 26 50 00	INTEGRAL LED SEE 26 51 00	20	1	120	20	
F3	SURFACE MOUNTED FLUORESCENT STRIP LIGHT	SEE 26 50 00	28W T5 SEE 26 51 00	28	1	120	30 PER 4'	
F4	RECESSED LED DOWNLIGHT	SEE 26 50 00	INTEGRAL LED SEE 26 51 00	10	1	120	10	
F5	SURFACE MOUNTED FLUORESCENT STRIP LIGHT, DIMMABLE	SEE 26 50 00	28W T5 SEE 26 51 00	28	1	120	30 PER 4'	PROVIDE INTEGRAL BATTERY BALLAST WHERE INDICATED
F6/F6T	120V TRACK SYSTEM WITH 39W LED TRACK MOUNTED LIGHTS	SEE 26 50 00	INTEGRAL LED SEE 26 51 00	39	1	120	39	WATTS FOR ENERGY CODE DETERMINED BY RATING OF CIRCUITS SERVING TRACK
F7	SURFACE MOUNTED LED UNDERCABINET LIGHT	SEE 26 50 00	INTEGRAL LED SEE 26 51 00	6.5 PER 1'	–	120	8 PER 1'	INTEGRAL DRIVER
F8	SURFACE MOUNTED LED STRIP	SEE 26 50 00	INTEGRAL LED SEE 26 51 00	2.4 PER 1'	–	120	3.2 PER 1'	PROVIDE REMOTE POWER SUPPLY PER SPECIFICATION AND MANUFACTURER REQUIREMENTS – COORDINATE LOCATION WITH ARCHITECT PRIOR TO INSTALLATION
EXISTING PENDANT	EXISTING/REFURBISHED RLM PENDANTS WITH MEDIUM BASE SOCKET, CFL RETROFIT	SEE 26 50 00	MEDIUM BASE	32W CFL	1	120	32	PROVIDE UL 1598 COMPLIANT WATTAGE RESTRICTION LABEL INSIDE SOCKET – MAXIMUM RELAMPING WATTAGE 60W
FX1	WALL SURFACE MOUNTED RLM DOWNLIGHT, COMPACT FLUORESCENT WITH INTEGRAL BALLAST	SEE 26 50 00	42W CFL	42	1	120	46	WHERE INDICATED, PROVIDE BATTERY BACKUP BALLAST SUITABLE FOR LAMP TYPE, BODINE B75C OR APPROVED EQUAL. COORDINATE MOUNTING LOCATION WITH ARCHITECT AND PROVIDE NEMA 3R WEATHERPROOF ENCLOSURE IF REQUIRED
FX2	SURFACE MOUNTED LINEAR LED LIGHT	SEE 26 50 00	INTEGRAL LED SEE 26 51 00	10 PER 1'	–	120	96 PER DRIVER	PROVIDE 96W DRIVER AVAILABLE FROM MANUFACTURER, COORDINATE MOUNTING LOCATION WITH ARCHITECT PRIOR TO INSTALLATION
FX3	SURFACE MOUNTED LINEAR LED LIGHT	SEE 26 50 00	INTEGRAL LED SEE 26 51 00	13 PER 1'	–	120	17 PER 1'	INTEGRAL DRIVER
POLE LIGHTS	EXTERIOR POLE MOUNTED LIGHTING TO BE SPECIFIED BY CALIFORNIA DOT	TO BE DETERMINED	TO BE DETERMINED	–	–	120	300	MAXIMUM 300 INPUT WATTS
W1	LOW–PROFILE FLUORESCENT STRIPLIGHT WITH WIREGUARD	LITHONIA Z–1–28T5–()–()–MVOLT–GEP10PS–WGZ46	28W T5 OSRAM FP28/830/ECO	28	1	120	30	OR APPROVED EQUAL
W2	FLUORESCENT STRIPLIGHT WITH WIREGUARD	LITHONIA Z–2–28T5–()–()–MVOLT–GEP10PS–WGZ46	28W T5	28	2	120	60	OR APPROVED EQUAL
W3	ARCHITECTURAL LED EMERGENCY LIGHT WITH INTEGRAL BATTERY	DUAL–LITE EV–2–()–()–()	INTEGRAL LED	1	2	120	2	FIXTURE SHALL BE NORMALLY OFF AND SHALL AUTOMATICALLY ILLUMINATE UPON UTILITY POWER LOSS
EXIT SIGN	EDGE–LIT LED, RED LETTERS ON MIRRORED FACE, BRUSHED ALUMINUM HOUSING	LITHONIA LRP–()–1–RC–()–120/277–()–()	LED ASSEMBLY INCLUDED	––	1	120/277	3	CONTRACTOR TO COORDINATE DIRECTIONAL INDICATORS AND REQUIRED MOUNTING CONFIGURATIONS WITH ELECTRICAL DRAWINGS AND FIELD CONDITIONS PRIOR TO RELEASE. VERIFY HOUSING FINISH WITH ARCHITECT.

05/03/13 PERMIT SET

3/27/2013 8:47:05 PM

SAN FRANCISCO OAKLAND BAY BRIDGE
EAST SPAN SEISMIC SAFETY PROJECT

Jaswinder Gill
DESIGN OVERSIGHT
03/27/13
SIGN OFF DATE

	BY	CHECKED
DESIGN	ANDREW HARRINGTON	ROBERT C. NIXDORF
DETAILS		
QUANTITIES		

PREPARED FOR THE
STATE OF CALIFORNIA
DEPARTMENT OF TRANSPORTATION

KAREN Y. WANG
PROJECT ENGINEER

BRIDGE NO
POST MILES 2.0

IERBYS TEMPORARY IMPROVEMENTS - BUILDING

ELECTRICAL LIGHTING FIXTURE SCHEDULE AND TITLE 24 CALCULATIONS

SHEET E001

DESIGN DETAIL SHEET (ENGLISH) (REV. 03/14/12)

ORIGINAL SCALE IN INCHES FOR REDUCED PLANS 0 1 2 3

UNIT: 04
PROJECT NUMBER AND PHASE:
CONTRACT NO.: 0120F4

DISREGARD PRINTS BEARING EARLIER REVISION DATES

REVISION DATES

C:\Users\cschurr\Documents\56185_Gateway Park - Central_cschurr.rvt

CCO 298 S1 - Attachment A - page 53

DIST	COUNTY	ROUTE	POST MILES TOTAL PROJECT	SHEET No	TOTAL SHEETS
04	ALA	80	2.0	1204be	1204

REGISTERED ENGINEER — 03/27/13 DATE

PLANS APPROVAL DATE

REGISTERED PROFESSIONAL ENGINEER — ANDREW HARRINGTON — No. E19367 — ELECTRICAL — STATE OF CALIFORNIA

The state of California or its officers or agents shall not be responsible for the accuracy or completeness of scanned copies of this plan sheet.

WSP • FLACK + KURTZ
405 HOWARD ST. #500
SAN FRANCISCO, CA 94106

CERTIFICATE OF COMPLIANCE (Part 4 of 4) OLTG-1C

Project Name: *IERBYS TEMPORAQRY IMPROVEMENTS* — Date: *3/15/2013*

ALLOWED AND INSTALLED OUTDOOR LIGHTING POWER

		Lighting Wattage Power Allowance
A	Lighting power allowance for general hardscape (from OLTG-2C Page 1 of 3)	1,694
B	Specific application lighting wattage allowance per unit length (from OLTG-2C Page 1 of 3)	0
C	Specific application lighting wattage allowance for ornamental lighting (from OLTG-2C Page 1 of 3)	0
D	Specific application lighting wattage allowance per application (from OLTG-2C Page 2 of 3)	156
E	Specific application lighting wattage allowance per area (from OLTG-2C Page 2 of 3)	0
F	Specific application lighting wattage allowance for ordinance requirements (from OLTG-2C Page 3 of 3)	0
G	Total Allowed Wattage = Sum of rows A through F:	1,850
H	Total installed watts (from Compliance Fixture Schedule, (from OLTG-2C Page 1 of 3)	1,656

Complies if wattage in row H is less than or equal to the wattages in row G ☑ Yes ☐ No

EnergyPro 5.1 by EnergySoft User Number: 5056 **RunCode: 2013-03-15T13:35:19** ID: S121123000 Page 10 of 12

CERTIFICATE OF COMPLIANCE (Part 3 of 4) OLTG-1C

Project Name: *IERBYS TEMPORAQRY IMPROVEMENTS* — Date: *3/15/2013*

A. OUTDOOR LIGHTING ZONE

OUTDOOR LIGHTING ZONE: ☐ OLZ 1 ☐ OLZ 2 ☑ OLZ 3 ☐ OLZ 4

Is the Outdoor Lighting Zone: ☑ Default in accordance with §10-114, or ☐ Amended by JHA

Complete the information below if the default Outdoor Lighting Zone has been amended by the local jurisdiction having authority (JHA):

- ☐ The site is a government designated park, recreational area, wildlife preserve, or portion thereof, and has been designated as LZ2 or LZ3, in accordance with Table 10-114-A, because the site is contained within such a zone.
- ☐ The local jurisdiction having authority has officially adopted a change to the State Default Lighting Zone and has notified the Energy Commission by providing the materials required in §10-114(d) to the Executive Director.
- ☐ The adopted change is posted on the Energy Commission website.

B. ADDITIONAL LIGHTING POWER ALLOWANCE FOR ORDINANCE REQUIREMENTS

Are additional lighting power allowances for ordinance in Table 147-C used? ☐ Yes ☑ No

Complete the information below if additional lighting power allowances for ordinance requirements are used:

- ☐ The local jurisdiction having authority has officially adopted specific outdoor light levels, which are expressed as average or minimum footcandle levels, by following a public process that allowed for formal public notification, review, and comment about the proposed change.
- ☐ The local jurisdiction having authority which adopted specific outdoor light levels and has notified the Commission by providing the following materials required §10-114(f) to the Executive Director.

C. ACCEPTANCE FORMS

Required Acceptance Tests

Designer:

This form is to be used by the designer and attached to the plans. Listed below is the acceptance test for the Lighting system, **OLTG-2A**. The designer is required to check the acceptance tests and list all control devices serving the building or space shall be certified as meeting the Acceptance Requirements for Code Compliance. If all the lighting system or control of a certain type requires a test, list the different lighting and the number of systems. The NA7 Section in the Appendix of the Nonresidential Reference Appendices Manual describes the test. Since this form will be part of the plans, completion of this section will allow the responsible party to budget for the scope of work appropriately. **Forms can be grouped by type of Luminaire controlled.**

Enforcement Agency:

Systems Acceptance. Before Occupancy Permit is granted for a newly constructed building or space or when ever new lighting system with controls is installed in the building or space shall be certified as meeting the Acceptance Requirements.
The **OLTG-2A** form is not considered a complete form and is not to be accepted by the enforcement agency unless the boxes are checked and/or filled and signed. In addition, a Certificate of Acceptance forms shall be submitted to the enforcement agency that certifies plans, specifications, installation certificates, and operating and maintenance information meet the requirements of §10-103(b) of Title 24 Part 6. The field inspector must receive the properly filled out and signed forms before the building can receive final occupancy. A copy of the **OLTG-2A** for each different lighting luminaire control(s) must be provided to the owner of the building for their records.

	Luminaires Controlled			Certificate of Acceptance OLTG-2A[1]
Equipment Requiring Testing	Description	Qty. of Like Controls	Location	Outdoor Lighting Acceptance Tests

1. Insert: **OMS** for Outdoor Motion Sensor; **OLSC** for Outdoor Lighting Shutoff Controls; **OP** for Outdoor Photocontrol; **ATS** for Astronomical Time Switch; and, **STS** for Standard (non-astronomical) Time Switch acceptance.

EnergyPro 5.1 by EnergySoft User Number: 5056 **RunCode: 2013-03-15T13:35:19** ID: S121123000 Page 9 of 12

CERTIFICATE OF COMPLIANCE (Part 2 of 4) OLTG-1C

Project Name: *IERBYS TEMPORAQRY IMPROVEMENTS* — Date: *3/15/2013*

COMPLIANCE FIXTURE / LIGHTING CONTROL SCHEDULE and FIELD INSPECTION CHECKLIST

INSTALLATION CERTIFICATE, OLTG-1INST (Retain a copy and verify form is completed and signed.) **Field Inspection** ☐

CERTIFICATE OF ACCEPTANCE, OLTG-2A (Retain a copy and verify form is completed and signed.) **Field Inspection** ☐

Luminaire Schedule			Installed Watts							
A	B	C	D	E	F		G	H	I	
					How wattage was determined				Field Inspector[2]	
Name or Item Tag	Luminaire Description[1] See footnote below (i.e.: 1 lamp pole-top shoe-box 400 watt metal halide)	Cutoff Designation	Watts per Luminaire	Special Features	Default from NA-8	According to §130 (D or E)	Number of Luminaires	Installed Watts (D X G)	Pass	Fail
POLE LT	POLE LT - POLE MTD LIGHT TO BE SPECIFIED - 300\		300.0	☐	☑	☐	4	1,200	☐	☐
FX1	EXISTING - Medium Base Pendant Fixture		60.0	☐	☑	☐	6	360	☐	☐
FX2	FX2 - Linear LED Light w/ 96W Driver		96.0	☐	☑	☐	1	96	☐	☐
				☐	☐	☐			☐	☐
				☐	☐	☐			☐	☐
				☐	☐	☐			☐	☐
				☐	☐	☐			☐	☐
				☐	☐	☐			☐	☐
				☐	☐	☐			☐	☐
Enter total into OLTG-1C; Page 4 of 4: Row H; Total Installed Watts:								1,656		

1. Type of luminaire (i.e.: post top, wall pack, surface, shoe box); for non-incandescent luminaires, indicate nominal lamp wattage and lamp type (i.e.: fluorescent, incandescent, HID); ballast type (i.e.: electronic or magnetic); number of lamps and number of ballasts per luminaire. For incandescent luminaires, the luminaire wattage listed in column D shall be the maximum relamping rated wattage on a permanent factory-installed label on the luminaire, NOT the wattage of the lamp (bulb) used, in accordance with Section 130(d or e).
2. If Fail then describe on Page 2 of the Inspection Checklist Form and take appropriate action to correct. Verify building plans if necessary.

EXEMPT LUMINAIRES **Field Inspection** ☐

Name or Symbol	Description of exempt luminaires in accordance with §147

MANDATORY CONTROLS **Field Inspection** ☐

#	Description	Location	#	Description	Location

SPECIAL FEATURES INSPECTION CHECKLIST (See Page 2 of 4 of OLTG-1C)

The local enforcement agency should pay special attention to the items specified in this checklist. These items require special written justification and documentation, and special verification. The local enforcement agency determines the adequacy of the justification, and may reject a building or design that otherwise complies based on the adequacy of the special justification and documentation submitted.

Filed Inspector Notes or Discrepancies:

EnergyPro 5.1 by EnergySoft User Number: 5056 **RunCode: 2013-03-15T13:35:19** ID: S121123000 Page 8 of 12

CERTIFICATE OF COMPLIANCE (Part 1 of 4) OLTG-1C

Project Name: *IERBYS TEMPORAQRY IMPROVEMENTS* — Date: *3/15/2013*

Project Address: *210 BURMA ROAD OAKLAND, CA 94607* — Total Illuminated Area: *6,424*

GENERAL INFORMATION

Phase of Construction: ☐ New Construction ☐ Addition ☑ Alteration

Documentation Author's Declaration Statement

I certify that this Certificate of Compliance documentation is accurate and complete.

Name: *ANDREW HARRINGTON*	Signature: [signed]
Company: *WSP Flack+Kurtz*	Date: *3/15/2013*
Address: *405 HOWARD ST STE 500*	CEA # / CEPE #
City/State/Zip: *SAN FRANCISCO, CA 94105*	Phone: *(415) 398-3833*

Principal Lighting Designer's Declaration Statement

- I am eligible under Division 3 of the California Business and Professional Code to accept responsibility for the lighting design.
- This Certificate of Compliance identifies the lighting features and performance specifications required for compliance with Title 24, Pages 1 and 6 of the California Code of Regulations.
- The design features represented on this Certificate of Compliance are consistent with the information provided to document this design on the other applicable compliance forms, worksheets, calculations, plans and specifications submitted to the enforcement agency for approval with this building permit application.

Name: *ANDREW HARRINGTON*	Signature: [signed]
Company: *WSP FLACK + KURTZ*	Phone: *415.398.3833*
Address: *405 HOWARD STREET*	License #: E19367
City/State/Zip: *SAN FRANCISCO , CA 94105*	Date: 02/15/2013

Principal Lighting Designer's Declaration

☑ I certify that this Certificate of Compliance documentation is accurate and complete, and accounts for all outdoor lighting power, including building mounted, pole mounted, as well as all other lighting designed for the site, and that Additional Lighting Power Allowances for Specific Applications or Additional Lighting Power Allowances for Ordinance Requirements have not been counted more than one time for the same area, in accordance with Section 147 of the Standards.

Outdoor Lighting Mandatory Measures
Indicate location on building plans of Mandatory Measures Note Block: E001

LIGHTING COMPLIANCE FORMS & WORKSHEETS (check box if worksheets is included)

For detailed instructions on the use of this and all Energy Efficiency Standards compliance forms; please refer to the Nonresidential Manual published by the California Energy Commission.

☑	OLTG-1C	Certificate of Compliance. All 4 pages required on plans for all submittals.
☑	OLTG-2C	(Pages 1 of 3) Lighting Wattage Allowances for General Hardscape, Sales Frontage, or Ornamental Lighting. Optional on plans.
☑	OLTG-2C	(Pages 2 of 3) Lighting Wattage Allowance for Per Application or Per Area. Optional on plans.
☐	OLTG-2C	(Pages 3 of 3) Additional Lighting Power Allowance for Ordinance Requirements. Optional on plans.

EnergyPro 5.1 by EnergySoft User Number: 5056 **RunCode: 2013-03-15T13:35:19** ID: S121123000 Page 7 of 12

OUTDOOR LIGHTING WORKSHEET (Part 2 of 3) OLTG-2C

Project Name: *IERBYS TEMPORAQRY IMPROVEMENTS* — Date: *3/15/2013*

D. SPECIFIC APPLICATION LIGHTING WATTAGE ALLOWANCE PER APPLICATION

DETERMINE WATTAGE ALLOWANCE				DESIGN WATTS					ALLOWANCE
A	B	C	D	E	F	G	H	I	J
Specific Lighting Application	Number of Applications	Specific Application Allowance (watts)	Wattage Allowance (B X C)	Luminaire Symbol	Luminaire Type	Lumin QTY	Watts Per Luminaire	Design Watts (G X H)	Allowed Watts Minimum of D or I
BUILDING ENTRANCE	2	100	200	FX2	FX2 - Linear LED Light w/ 96W Driver	1	96.0	96	156
				FX1	EXISTING - Medium Base Pendant Fixt	1	60.0	60	
Enter total into OLTG-1C; Page 4 of 4; Row D; Specific Application Wattage Allowance Per Application									156

E. SPECIFIC APPLICATION LIGHTING WATTAGE ALLOWANCE PER AREA

DETERMINE WATTAGE ALLOWANCE				LUMINAIRE TYPE		DESIGN WATTS			
A	B	C	D	E	F	G	H	I	J
Specific Lighting Application	Illuminated Area of Application	Specific Application Allowance (watts per ft^2)	Wattage Allowance (B X C)	Code for Luminaire Type	Luminaire Type	Lumin QTY	Watts Per Luminaire	Design Watts (G X H)	Allowed Watts Minimum of D or I
Enter total into OLTG-1C; Page 4 of 4; Row E; Specific Application Lighting Wattage Allowance Per Area									0

EnergyPro 5.1 by EnergySoft User Number: 5056 **RunCode: 2013-03-15T13:35:19** ID: S121123000 Page 12 of 12

OUTDOOR LIGHTING WORKSHEET (Part 1 of 3) OLTG-2C

Project Name: *IERBYS TEMPORAQRY IMPROVEMENTS* — Date: *3/15/2013*

A. LIGHTING POWER ALLOWANCE FOR GENERAL HARDSCAPE

AREA WATTAGE ALLOWANCE (AWA)			LINEAR WATTAGE ALLOWANCE (LWA)			INITIAL WATTAGE ALLOWANCE	TOTAL GENERAL HARDSCAPE LIGHTING ALLOWANCE
A	B	C	D	E	F	G	H
Illuminated Hardscape Area	AWA Per Square Foot	AWA (A X B)	Perimeter Length of General Hardscape	LWA Per Linear Foot	LWA (D X E)	IWA (Watts)	C + F + G
6,424	0.092	591	362	0.920	333	770	1,694
Enter total into OLTG-1C; Page 4 of 4; Row A; Lighting Power Allowance for General Hardscape							1,694

☑ **Yes AWA, LWA, and IWA from Table 147-A was used as appropriate for the Outdoor Lighting Zone**

B. SPECIFIC APPLICATION LIGHTING WATTAGE ALLOWANCE PER UNIT LENGTH (Available only for sales frontage)

DETERMINE WATTAGE ALLOWANCE				LUMINAIRE TYPE		DESIGN WATTS			
A	B	C	D	E	F	G	H	I	J
Specific Lighting Application	Linear Foot of Frontage	Sales Frontage Allowance for OLZ (Watts per LF)	Wattage Allowance (B X C)	Name or Symbol	Luminaire Type	Lumin QTY	Watts Per Luminaire	Design Watts (G X H)	Allowed Watts Minimum of D or I
Enter total into OLTG-1C; Page 4 of 4; Row B; Specific Application Lighting Wattage Allowance Per Unit Length									0

C. SPECIFIC APPLICATION WATTAGE ALLOWANCE FOR ORNAMENTAL LIGHTING

DETERMINE WATTAGE ALLOWANCE				LUMINAIRE TYPE		DESIGN WATTS			
A	B	C	D	E	F	G	H	I	J
Specific Lighting Application	Square feet of Harscape	Ornamental Lighting Allowance for OLZ (Watts per ft^2)	Wattage Allowance (B X C)	Name or Symbol	Luminaire Type	Lumin QTY	Watts Per Luminaire	Design Watts (G X H)	Allowed Watts Minimum of D or I
Enter total into OLTG-1C; Page 4 of 4; Row C; Specific Application Wattage for Ornamental Lighting									0

EnergyPro 5.1 by EnergySoft User Number: 5056 **RunCode: 2013-03-15T13:35:19** ID: S121123000 Page 11 of 12

05/03/13 PERMIT SET

3/27/2013 8:47:15 PM

SAN FRANCISCO OAKLAND BAY BRIDGE
EAST SPAN SEISMIC SAFETY PROJECT

Jaswinder Gill — **DESIGN OVERSIGHT**	**DESIGN**	BY ANDREW HARRINGTON	CHECKED ROBERT C. NIXDORF	PREPARED FOR THE STATE OF CALIFORNIA DEPARTMENT OF TRANSPORTATION
03/27/13 — **SIGN OFF DATE**	**DETAILS**	BY	CHECKED	
	QUANTITIES	BY	CHECKED	

KAREN Y. WANG — PROJECT ENGINEER

BRIDGE NO — **POST MILES** 2.0

IERBYS TEMPORARY IMPROVEMENTS - BUILDING

ELECTRICAL TITLE 24 CALCULATIONS

SHEET E002

DESIGN DETAIL SHEET (ENGLISH) (REV. 03/14/12)

ORIGINAL SCALE IN INCHES FOR REDUCED PLANS 0 1 2 3

UNIT: 04
PROJECT NUMBER AND PHASE: CONTRACT NO.: 0120F4

DISREGARD PRINTS BEARING EARLIER REVISION DATES — **REVISION DATES** — **SHEET** 52 **OF** 66

C:\Users\cschurr\Documents\56185_Gateway Park - Central_cschurr.rvt

DIST	COUNTY	ROUTE	POST MILES TOTAL PROJECT	SHEET No	TOTAL SHEETS
04	ALA	80	2.0	1204bf	1204

REGISTERED ENGINEER 03/27/13 DATE

PLANS APPROVAL DATE

REGISTERED PROFESSIONAL ENGINEER ANDREW HARRINGTON No. E19367 ELECTRICAL STATE OF CALIFORNIA

The state of California or its officers or agents shall not be responsible for the accuracy or completeness of scanned copies of this plan sheet.

WSP • FLACK + KURTZ
405 HOWARD ST. #500
SAN FRANCISCO, CA 94106

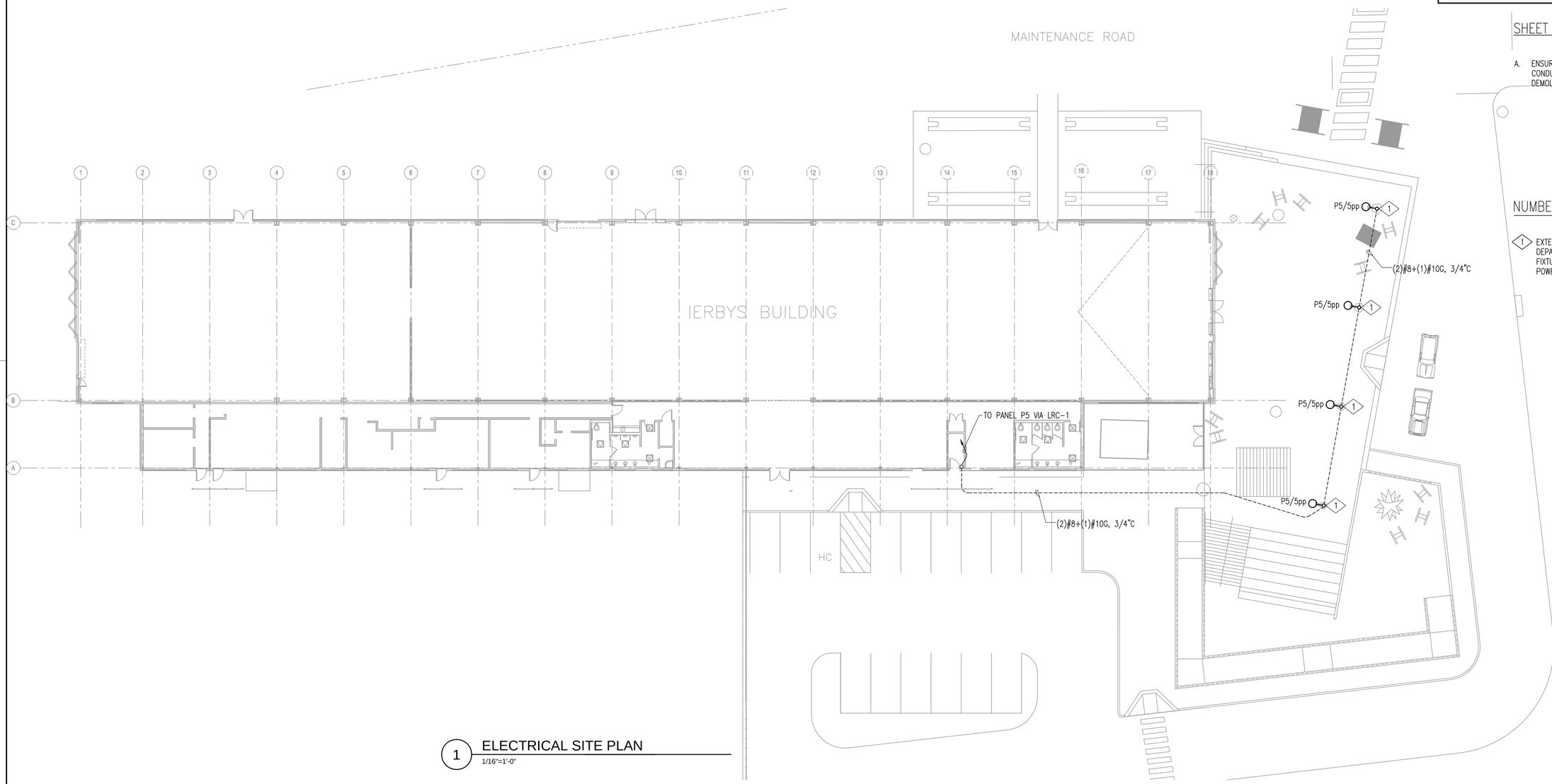

1 ELECTRICAL SITE PLAN
1/16"=1'-0"

SHEET NOTES

A. ENSURE THAT EXISTING UNDERGROUND CONDUITS AND CONDUCTORS TO BE REUSED ARE PROTECTED DURING DEMOLITION.

NUMBERED NOTES

1. EXTERIOR POLE MOUNTED FIXTURE PER CALIFORNIA DEPARTMENT OF TRANSPORTATION SPECIFICATIONS. FIXTURE TO BE COMPATIBLE WITH 120VAC INPUT POWER AND LESS THAN OR EQUAL TO 300W.

05/03/13 PERMIT SET

N

3/27/2013 8:47:28 PM

SAN FRANCISCO OAKLAND BAY BRIDGE
EAST SPAN SEISMIC SAFETY PROJECT

IERBYS TEMPORARY IMPROVEMENTS - BUILDING

ELECTRICAL SITE PLAN

SHEET E100

Jaswinder Gill
DESIGN OVERSIGHT
03/27/13
SIGN OFF DATE

	BY	CHECKED
DESIGN	ANDREW HARRINGTON	ROBERT C. NIXDORF
DETAILS	BY	CHECKED
QUANTITIES	BY	CHECKED

PREPARED FOR THE STATE OF CALIFORNIA DEPARTMENT OF TRANSPORTATION

KAREN Y. WANG
PROJECT ENGINEER

BRIDGE NO
POST MILES 2.0

DESIGN DETAIL SHEET (ENGLISH) (REV. 03/14/12)

ORIGINAL SCALE IN INCHES FOR REDUCED PLANS 0 1 2 3

UNIT: 04
PROJECT NUMBER AND PHASE:
CONTRACT NO.: 0120F4

DISREGARD PRINTS BEARING EARLIER REVISION DATES

REVISION DATES ___ ___ ___ ___

SHEET 53 OF 66

C:\Users\cschurr\Documents\56185_Gateway Park - Central_cschurr.rvt

DIST	COUNTY	ROUTE	POST MILES TOTAL PROJECT	SHEET No	TOTAL SHEETS
04	ALA	80	2.0	1204bg	1204

REGISTERED ENGINEER — DATE 03/27/13

PLANS APPROVAL DATE

REGISTERED PROFESSIONAL ENGINEER ANDREW HARRINGTON No. E19367 ELECTRICAL STATE OF CALIFORNIA

The state of California or its officers or agents shall not be responsible for the accuracy or completeness of scanned copies of this plan sheet.

WSP • FLACK + KURTZ
405 HOWARD ST. #500
SAN FRANCISCO, CA 94106

SHEET NOTES

A. RELOCATE OR REMOVE, AS APPROPRIATE, EXISTING CONDUIT CROSSING DOORS OR OPERABLE WINDOWS ON EXTERIOR OF BUILDING, AS REQUIRED TO ALLOW FULL RANGE OF OPERATION. CONFIRM REQUIREMENTS ON SITE WITH ARCHITECT.

NUMBERED NOTES

1. THREE (3) EXISTING SINGLE-PHASE, 100KVA TRANSFORMERS AND ASSOCIATED CONDUCTORS AND EQUIPMENT TO REMAIN.
2. ALL EXISTING EQUIPMENT IN THIS ROOM TO REMAIN, UON.

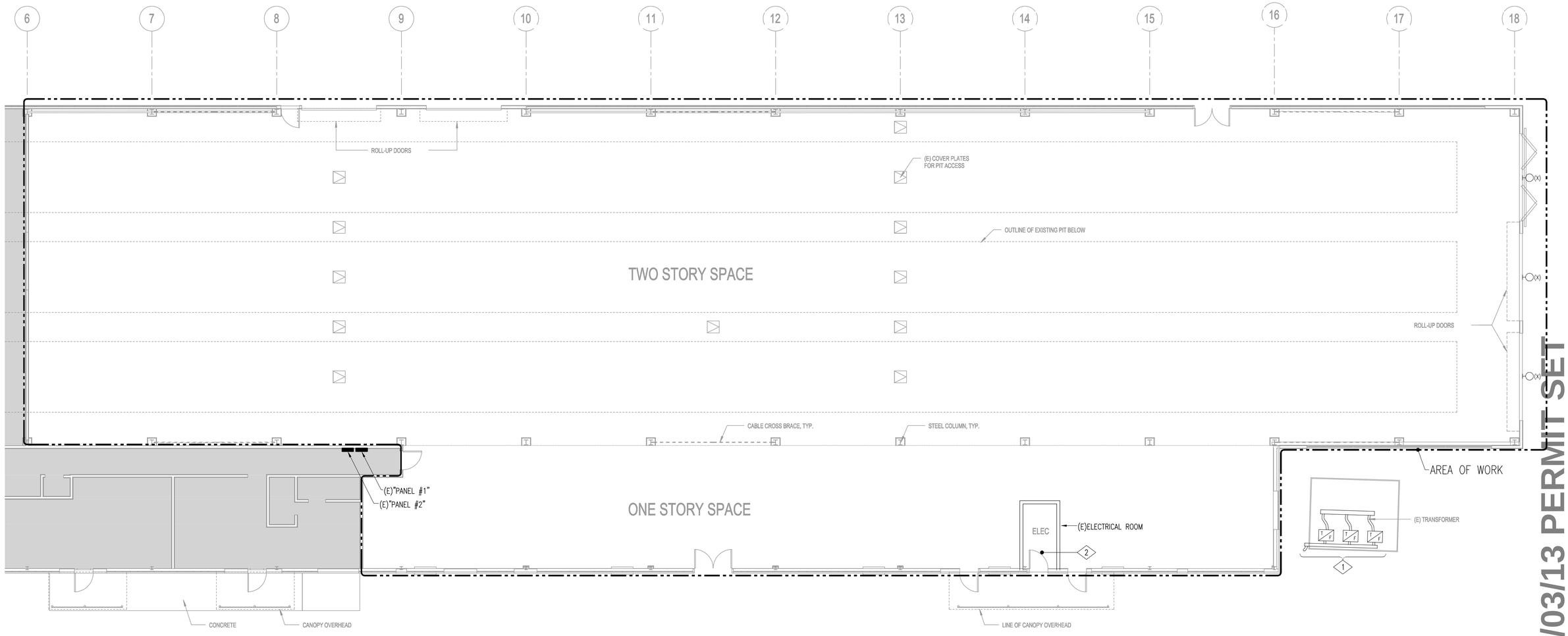

1 DEMOLITION FLOOR PLAN
1/8"=1'-0"

05/03/13 PERMIT SET

3/27/2013 8:47:39 PM

SAN FRANCISCO OAKLAND BAY BRIDGE
EAST SPAN SEISMIC SAFETY PROJECT

IERBYS TEMPORARY IMPROVEMENTS - BUILDING

ELECTRICAL DEMOLITION PLAN

SHEET E101

Jaswinder Gill
DESIGN OVERSIGHT
03/27/13
SIGN OFF DATE

	BY	CHECKED
DESIGN	ANDREW HARRINGTON	ROBERT C. NIXDORF
DETAILS	BY	CHECKED
QUANTITIES	BY	CHECKED

PREPARED FOR THE STATE OF CALIFORNIA DEPARTMENT OF TRANSPORTATION

KAREN Y. WANG
PROJECT ENGINEER

BRIDGE NO
POST MILES 2.0

DESIGN DETAIL SHEET (ENGLISH) (REV. 03/14/12)

ORIGINAL SCALE IN INCHES FOR REDUCED PLANS 0 1 2 3

UNIT: 04
PROJECT NUMBER AND PHASE:
CONTRACT NO.: 0120F4

DISREGARD PRINTS BEARING EARLIER REVISION DATES

REVISION DATES

SHEET 54 OF 66

C:\Users\cschurr\Documents\56185_Gateway Park - Central_cschurr.rvt

DIST	COUNTY	ROUTE	POST MILES TOTAL PROJECT	SHEET No	TOTAL SHEETS
04	ALA	80	2.0	1204bh	1204

REGISTERED ENGINEER — DATE 03/27/13

PLANS APPROVAL DATE

REGISTERED PROFESSIONAL ENGINEER ANDREW HARRINGTON No. E19367 ELECTRICAL STATE OF CALIFORNIA

The state of California or its officers or agents shall not be responsible for the accuracy or completeness of scanned copies of this plan sheet.

WSP • FLACK + KURTZ
405 HOWARD ST. #500
SAN FRANCISCO, CA 94106

SHEET NOTES

A. ALL EQUIPMENT AND DEVICES SHOWN ON THIS DRAWING ARE NEW (N), UON.

B. VERIFY EXACT LOCATION AND MOUNTING HEIGHT OF ALL DEVICES WITH ARCHITECT, PRIOR TO INSTALLATION.

C. PROVIDE CONDUIT AND WIRE FOR CIRCUITING SHOWN

D. FIELD VERIFY AVAILABLE SPARE CIRCUIT BREAKERS IN PANEL #1 AFTER DEMOLITION IS COMPLETE AND ADJUST CIRCUIT NUMBERS FOR NEW CIRCUITS AS REQUIRED.

E. TERMINATE ALL TELECOM CONDUIT AT TELECOMMUNICATIONS BACKBOARD IN ELECTRICAL ROOM. COORDINATE EXACT LOCATION WITH ARCHITECT PRIOR TO INSTALLATION.

F. PROVIDE NEW FIRE ALARM CONNECTIONS TO EXISTING WATER FLOW AND TAMPER SWITCHES TO EXISTING EXTERIOR FIRE ALARM BELL. VERIFY EXACT LOCATIONS IN THE FIELD.

13 PROVIDE A 120V, 250VA, SINGLE PHASE, UL924 LISTED EMERGENCY LIGHTING INVERTER, DUAL-LITE MODEL LG2S, OR APPROVED EQUAL. CONNECT

7 PROVIDE A 120V, 250VA, SINGLE PHASE, UL924 LISTED EMERGENCY LIGHTING INVERTER, DUAL-LITE MODEL LG2S, OR APPROVED EQUAL. CONNECT TO CIRCUIT 9nn(EM) SERVING EXTERIOR EGRESS LIGHTING. SEE SHEET E301. CONNECT LIGHTING CIRCUIT/INVERTER AS EXTERNALLY SWITCHED LOAD PER MANUFACTURER WIRING INSTRUCTIONS.

8 LOCATE FLOOR BOXES PER ARCHITECTURAL DRAWINGS, SHEET A201.

9 PROVIDE 120VAC CONNECTION TO EACH TOUCHLESS FAUCET. MOUNT OUTLET BOXES TO BOTTOM OF COUNTER BEHIND SINKS, AND ROUTE CONDUIT FROM SIDE WING WALL ADJACENT TO ACCESSIBLE STALL.

10 PROVIDE WEATHERPROOF JUNCTION BOX UNDER SLAB AT THIS LOCATION, IN TRENCH, FOR INSTALLATION OF LOW VOLTAGE CABLING BY OTHERS. PROVIDE 1"EC FROM THIS BOX TO LOW VOLTAGE COMPARTMENT OF EACH FLOOR BOX IN THIS TRENCH. UP TO TWO (2) FLOOR BOXES MAY BE DAISY-CHAINED AND SERVED WITH A SINGLE 1" CONDUIT.

11 LOCATE AT AN ACCESSIBLE LOCATION ABOVE CEILING.

12 PROVIDE 4'X8' TELECOMMUNICATION BACKBOARD.

1 THREE (3) EXISTING SINGLE-PHASE, 100KVA TRANSFORMERS.

2 ELECTRICAL ROOM. ALL EXISTING POWER DEVICES AND EQUIPMENT IN THIS ROOM TO REMAIN, UON.

3 PROVIDE 120V, 1ø CONNECTION TO CEILING MOUNTED UNIT HEATER (UH-1-1 THROUGH UH-1-6. REFER TO ARCHITECTURAL DRAWINGS FOR CONDUIT ROUTING.

4 EXISTING 125A/3P ENCLOSED CIRCUIT BREAKER, PREVIOUSLY SERVING EQUIPMENT IN THE STEEL SHOP. REUSE THIS CIRCUIT BREAKER, AND CONNECT TO NEW FEEDER TO PANEL P5, PER PARTIAL RISER DIAGRAM.

5 EXISTING SPARE 100 AMP FRAME DISCONNECT SWITCH, NO FUSE. PROVIDE A NEW 80 AMP FUSE AND CONNECT TO NEW CONDENSING UNIT, PER PARTIAL RISER DIAGRAM.

6 PROVIDE A WEATHERPROOF (NEMA 3R) GUTTER OR JUNCTION BOX AS REQUIRED TO TAP FEEDER AND SERVE MECHANICAL UNITS, PER PARTIAL RISER DIAGRAM. MOUNT DISCONNECTS AND GUTTER TO UNISTRUT SUPPORT FIXED TO THE GROUND, IN ORDER TO MINIMIZE DISTURBANCE TO THE ASBESTOS WALL MATERIAL.

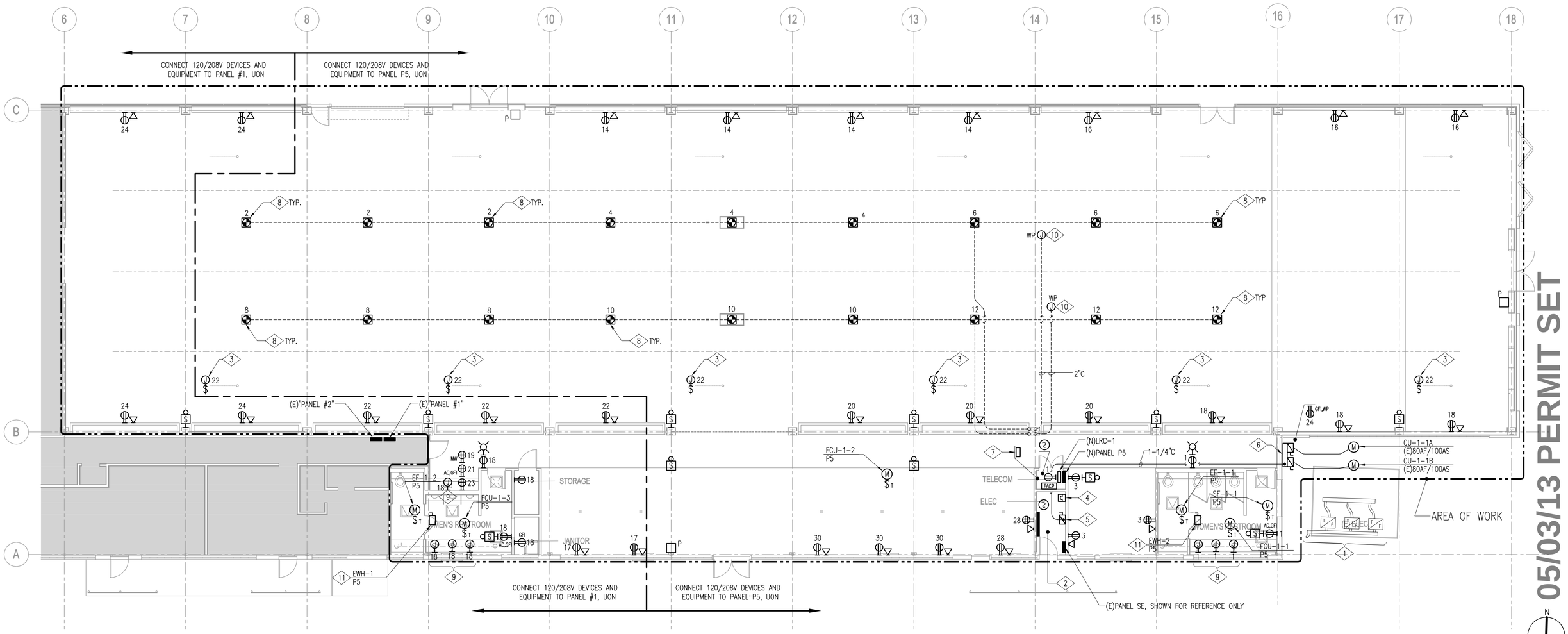

1 CONSTRUCTION FLOOR PLAN
1/8"=1'-0"

05/03/13 PERMIT SET

3/27/2013 8:47:46 PM

Jaswinder Gill DESIGN OVERSIGHT	DESIGN	BY ANDREW HARRINGTON	CHECKED ROBERT C. NIXDORF	PREPARED FOR THE STATE OF CALIFORNIA DEPARTMENT OF TRANSPORTATION	KAREN Y. WANG PROJECT ENGINEER
03/27/13 SIGN OFF DATE	DETAILS	BY	CHECKED		
	QUANTITIES	BY	CHECKED		

BRIDGE NO
POST MILES 2.0

SAN FRANCISCO OAKLAND BAY BRIDGE EAST SPAN SEISMIC SAFETY PROJECT

IERBYS TEMPORARY IMPROVEMENTS - BUILDING

ELECTRICAL CONSTRUCTION FLOOR PLAN - POWER

SHEET E201

DESIGN DETAIL SHEET (ENGLISH) (REV. 03/14/12)

ORIGINAL SCALE IN INCHES FOR REDUCED PLANS 0 1 2 3

UNIT: 04
PROJECT NUMBER AND PHASE:
CONTRACT NO.: 0120F4

DISREGARD PRINTS BEARING EARLIER REVISION DATES

REVISION DATES

SHEET 55 OF 66

C:\Users\cschurr\Documents\56185_Gateway Park - Central_cschurr.rvt

DIST	COUNTY	ROUTE	POST MILES TOTAL PROJECT	SHEET No	TOTAL SHEETS
04	ALA	80	2.0	1204bi	1204

REGISTERED ENGINEER — DATE 03/27/13

PLANS APPROVAL DATE

REGISTERED PROFESSIONAL ENGINEER ANDREW HARRINGTON No. E19367 ELECTRICAL STATE OF CALIFORNIA

The state of California or its officers or agents shall not be responsible for the accuracy or completeness of scanned copies of this plan sheet.

WSP • FLACK + KURTZ
405 HOWARD ST. #500
SAN FRANCISCO, CA 94106

SHEET NOTES

A. VERIFY EXACT LOCATION AND MOUNTING HEIGHTS FOR ALL LUMINAIRES AND CONTROLS WITH ARCHITECT PRIOR TO INSTALLATION.

B. PROVIDE A COMPLETE CONDUIT AND CONDUCTOR SYSTEM FOR THE COMPLETE POWER AND LIGHTING CONTROL SYSTEM SHOWN.

C. CONNECT ALL 120/208V LIGHTING TO NEW PANEL P5, VIA CONTROLS INDICATED.

D. DOUBLE LETTER CONTROL ZONE ("xx") INDICATES CONTROL VIA PROGRAMMABLE LIGHTING CONTROL RELAY.

E. SINGLE LETTER CONTROL ZONE ("x") INDICATES LOCAL/LINE VOLTAGE CONTROL.

F. PROVIDE LOW VOLTAGE SWITCHES WITH A SEPARATE ON/OFF BUTTON FOR EACH CONTROL ZONE SHOWN, PLUS A MASTER ON/OFF BUTTON.

NUMBERED NOTES

1. PROVIDE POWER CONNECTION TO EXTERIOR ILLUMINATED SIGNAGE. CONFIRM EXACT MOUNTING AND INSTALLATION REQUIREMENTS WITH ARCHITECT PRIOR TO INSTALLATION.
2. PROVIDE A DIMMER FOR EACH OF THE FOLLOWING CONTROL ZONES: a, b, c, d, e, f, g, h, j. FOR EACH DIMMER, PROVIDE A POWER MODULE INTERFACE AS REQUIRED TO EXPAND THE ELV TYPE DIMMING CAPACITY OF EACH CIRCUIT TO 16 AMPS OF CONNECTED LOAD. USE 3-WIRE TYPE DIMMERS AND LUTRON PHPM-WBX INTERFACE MODULES, OR APPROVED EQUAL. LOCATE INTERFACE MODULES AT A CONCEALED AND ACCESSIBLE LOCATION INSIDE FRAMED ARCHITECTURAL ELEMENTS.
3. PHOTOCELL SHALL TURN OFF SOME OR ALL OF ZONES INDICATED, PER TITLE 24, WHEN SUFFICIENT AMBIENT NATURAL LIGHT IS AVAILABLE. COORDINATE OPTIMAL LOCATION, CALIBRATION, AND PROGRAMMING OF PHOTOCELL WITH ARCHITECT AND VENDOR.
4. PROVIDE LOW VOLTAGE OVERRIDE SWITCH FOR EXTERIOR LIGHTING.
5. CONNECT EMERGENCY EGRESS EXTERIOR FIXTURE VIA LIGHTING INVERTER IN ELECTRICAL CLOSET. WIRE FIXTURE TO INVERTER AS AN "EXTERNALLY SWITCHED LOAD." UNDER NORMAL CONDITIONS, FIXTURE SHALL TURN ON AND OFF WITH PROGRAMMABLE RELAY. UPON UTILITY POWER LOSS, FIXTURE SHALL AUTOMATICALLY ILLUMINATE TO FULL BRIGHTNESS.
6. PROVIDE BATTERY BACKUP BALLAST FOR THIS FIXTURE, BODINE MODEL B75C OR APPROVED EQUAL. COORDINATE EXACT MOUNTING LOCATION OF BALLAST WITH ARCHITECT PRIOR TO INSTALLATION.

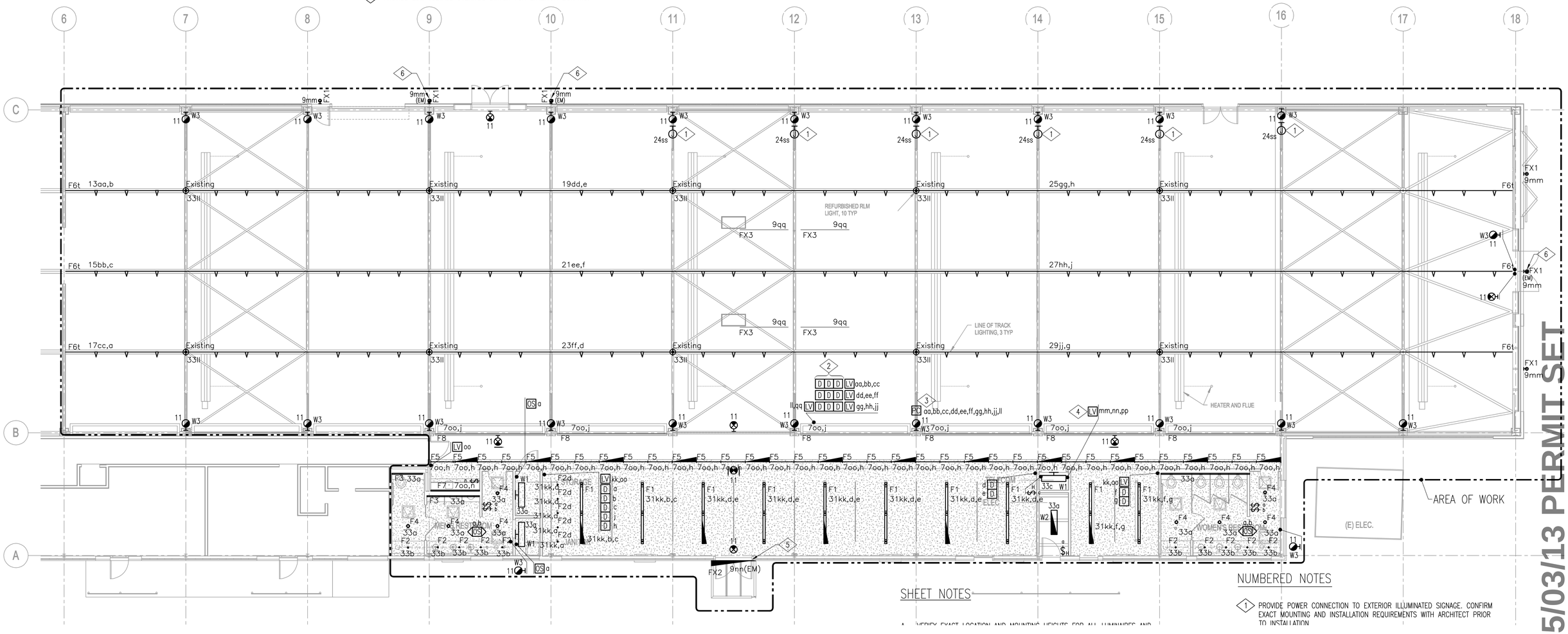

1 CONSTRUCTION FLOOR PLAN
1/8"=1'-0"

05/03/13 PERMIT SET

3/27/2013 8:47:51 PM

Jaswinder Gill DESIGN OVERSIGHT 03/27/13 SIGN OFF DATE	DESIGN	BY ANDREW HARRINGTON	CHECKED ROBERT C. NIXDORF	PREPARED FOR THE STATE OF CALIFORNIA DEPARTMENT OF TRANSPORTATION	KAREN Y. WANG PROJECT ENGINEER
	DETAILS	BY	CHECKED		
	QUANTITIES	BY	CHECKED		

BRIDGE NO
POST MILES 2.0

SAN FRANCISCO OAKLAND BAY BRIDGE
EAST SPAN SEISMIC SAFETY PROJECT

IERBYS TEMPORARY IMPROVEMENTS - BUILDING

ELECTRICAL CONSTRUCTION FLOOR PLAN - LIGHTING

SHEET E301

DESIGN DETAIL SHEET (ENGLISH) (REV. 03/14/12)

ORIGINAL SCALE IN INCHES FOR REDUCED PLANS 0 1 2 3

UNIT: 04
PROJECT NUMBER AND PHASE: CONTRACT NO.: 0120F4

DISREGARD PRINTS BEARING EARLIER REVISION DATES

REVISION DATES

SHEET 56 OF 66

C:\Users\cschurr\Documents\56185_Gateway Park - Central_cschurr.rvt

DIST	COUNTY	ROUTE	POST MILES TOTAL PROJECT	SHEET No	TOTAL SHEETS
04	ALA	80	2.0	1204bj	1204

REGISTERED ENGINEER — DATE 03/27/13

PLANS APPROVAL DATE

REGISTERED PROFESSIONAL ENGINEER ANDREW HARRINGTON No. E19367 ELECTRICAL STATE OF CALIFORNIA

The state of California or its officers or agents shall not be responsible for the accuracy or completeness of scanned copies of this plan sheet.

WSP • FLACK + KURTZ
405 HOWARD ST. #500
SAN FRANCISCO, CA 94106

WIRING SCHEDULE – COPPER CONDUCTORS (0–600V)

CIRCUIT RATING	CONDUIT SIZE (INCHES)							CONDUCTOR SIZE	
	NONE	G	N	NG	NGI	NNG	NNGI	PHASE/ NEUTRAL	GND/* IG
15	0.5	0.5	0.5	0.5	0.5	0.5	0.5	12	12
20	0.5	0.5	0.5	0.5	0.5	0.5	0.5	12	12
30	0.5	0.5	0.5	0.5	0.75	0.75	0.75	10	10
40	0.75	0.75	0.75	1	1	1	1	8	10
50	1	1	1	1.25	1.25	1.25	1.25	6	10
60	1	1.25	1.25	1.25	1.5	1.5	1.5	4	10
70	1	1.25	1.25	1.25	1.5	1.5	1.5	4	8
80	1.25	1.25	1.25	1.5	2	2	2	2	8
90	1.25	1.25	1.25	1.5	2	2	2	2	88
100	1.25	1.5	1.5	2	2	2	2.5	1	8
110	1.25	1.5	1.5	2	2	2	2.5	1	6
125	1.25	1.5	1.5	2	2	2	2.5	1	6
150	1.5	2	2	2	2.5	2.5	2.5	1/0	6
175	1.5	2	2	2	2.5	2.5	2.5	2/0	6
200	2	2	2	2.5	2.5	2.5	3	3/0	6
225	2	2.5	2.5	2.5	3	3	3	4/0	4

SUBSCRIPT KEY

SUBSCRIPT	CONDUCTORS PER CONDUIT
NONE	3 PHASE CONDUCTORS, CONDUIT GROUND
G	3 PHASE CONDUCTORS, 1 GROUNDING CONDUCTOR
N	3 PHASE CONDUCTORS, 1 NEUTRAL CONDUCTOR, CONDUIT GROUND
NG	3 PHASE CONDUCTORS, 1 NEUTRAL CONDUCTOR, 1 GROUNDING CONDUCTOR
NGI	3 PHASE CONDUCTORS, 1 NEUTRAL CONDUCTOR, 1 GROUNDING CONDUCTOR, 1 ISOLATED GROUNDING CONDUCTOR
NNG	3 PHASE CONDUCTORS, 2 NEUTRAL CONDUCTORS*, 1 GROUNDING CONDUCTOR
NNGI	3 PHASE CONDUCTORS, 2 NEUTRAL CONDUCTORS*, 1 GROUNDING CONDUCTOR, 1 ISOLATED GROUNDING CONDUCTOR

* SINGLE NEUTRAL CONDUCTOR SIZES FOR CIRCUIT RATING 125 AND LESS

PARALLEL CONDUCTORS ARE NOT PERMITTED UNDER 1/0. WHERE DOUBLE NEUTRAL CONDUCTORS ARE INDICATED, PROVIDE AN OVERSIZED NEUTRAL CONDUCTOR IN ACCORDANCE WITH THE FOLLOWING TABLE:

CIRCUIT RATING	15	20	30	40	50	60
SINGLE NEUTRAL CONDUCOTR SIZE	10	8	4	2	1	1/0
CIRCUIT RATING	70	80	90	100	125	
SINGLE NEUTRAL CONDUCTOR SIZE	2/0	3/0	4/0	250	250	

EXAMPLES

SOURCE — 225NG — LOAD

CIRCUIT RATING — 225 NG — SUBSCRIPT

NOTES

1. SCHEDULE IS BASED ON 3 CURRENT CARRYING CONDUCTORS IN RACEWAY, CABLE OR EARTH, AT AMBIENT AIR TEMPERATURE OF 30°C (86°F).
2. MODIFY IF USE OF 600MCM CONDUCTORS ARE DESIRED CONFIRM LUG SIZES ARE AVAILABLE.

EQUIPMENT CONNECTION SCHEDULE

DESIG-NATION	HP	FLA	KVA	VOLT-AGE	PH	POWER SOURCE	CONNEC-TION TYPE	BR. CKT. WIRING	REMARKS
CU-1-1A		28.9		208	3	80AF/100AS	SPC	80G TO TAP, 50G TO UNIT	SEE PARTIAL RISER DIAGRAM
CU-1-1B		28.9		208	3	80AF/100AS	SPC	80G TO TAP, 50G TO UNIT	SEE PARTIAL RISER DIAGRAM
EF-1-1			0.217	120	1	P5	FR	(2)#12+(1)#12G, 1/2"C	
EF-1-2			0.217	120	1	P5	FR	(2)#12+(1)#12G, 1/2"C	
EWH-1			4.5	208	3	P5	SPC	20G	NON-FUSED DISCONNECT
EWH-2			4.5	208	3	P5	SPC	20G	NON-FUSED DISCONNECT
FCU-1-1		2.72		208	1	P5	FR	(2)#12+(1)#12G, 1/2"C	
FCU-1-2		2.72		208	1	P5	FR	(2)#12+(1)#12G, 1/2"C	
FCU-1-3		2.72		208	1	P5	FR	(2)#12+(1)#12G, 1/2"C	
SF-1-1			0.305	120	1	P5	FR	(2)#12+(1)#12G, 1/2"C	

EQUIPMENT CONNECTION DESIGNATIONS LEGEND

DESIGNATION	DESCRIPTION	DESIGNATION	DESCRIPTION	DESIGNATION	DESCRIPTION
CU	CONDENSING UNIT	PS	PROJECTION SCREEN	VM	VENDING MACHINE
EF	EXHAUST FAN	REF	REFRIGERATOR	VFD	VARIABLE FREQUENCY DRIVE
EWH	ELECTRIC WATER HEATER	SD	SMOKE DAMPER	TYPE FR	FRACTIONAL HP MOTOR
FCU	FAN COIL UNIT	SE	SEWAGE EJECTOR	TYPE FWS	FURNISHED WITH STARTER
FSD	FIRE/SMOKE DAMPER	SF	SUPPLY FAN	TYPE M	MOTOR WITH STARTER
GD	GARBAGE DISPOSAL	SP	SUMP PUMP	TYPE SPC	SINGLE POINT CONNECTION
MW	MICROWAVE OVEN	UH	UNIT HEATER	TYPE VFD	VARIABLE FREQUENCY DRIVE

NUMBERED NOTES

1. TO EXISTING EQUIPMENT TO REMAIN. NOT AFFECTED UNDER SCOPE OF WORK.
2. EXISTING DEVICE SERVES EQUIPMENT TO BE REMOVED UNDER DEMOLITION SCOPE OF WORK. REMOVE EXISTING CONDUCTORS AND CONDUIT BACK TO DEVICE, TURN OFF, AND LABEL AS A "SPARE."
3. EXISTING DEVICE SERVES EQUIPMENT TO BE REMOVED UNDER DEMOLITION SCOPE OF WORK. REMOVE EXISTING CONDUCTORS AND CONDUIT BACK TO DEVICE, AND PROVIDE NEW FEEDER TO CONNECT TO NEW EQUIPMENT.
4. EXISTING SPARE 100AF DISCONNECT SWITCH WITH NO FUSE. PROVIDE NEW 80 AMP FUSE AND CONNECT TO NEW EQUIPMENT.
5. PROVIDE NEW 80G TAP FEEDER, OR CONFIRM THAT EXISTING TAP FEEDER TO DISCONNECT SWITCH IS MINIMUM (3)#2+(1)#8G IN 1-1/4"C, COPPER CONDUCTORS.
6. PROVIDE NEW 120V, 250VA, SINGLE-PHASE EMERGENCY LIGHTING INVERTER. REFER TO NUMBERED NOTE 7 ON E201 FOR SPECIFICATION INFORMATION.

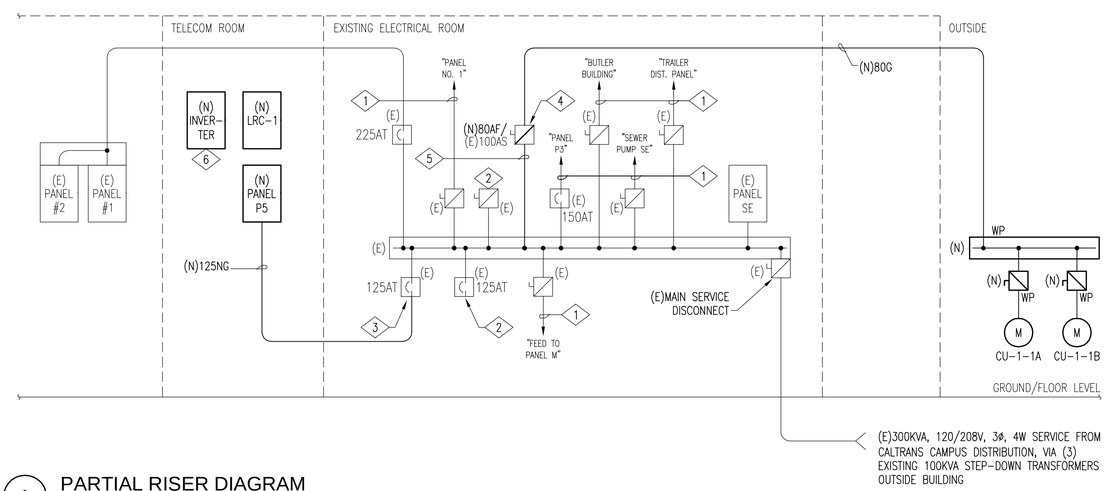

1 PARTIAL RISER DIAGRAM
NOT TO SCALE

05/03/13 PERMIT SET

3/27/2013 8:47:57 PM

Jaswinder Gill
DESIGN OVERSIGHT

03/27/13
SIGN OFF DATE

DESIGN DETAIL SHEET (ENGLISH) (REV. 03/14/12)

	BY	CHECKED
DESIGN	ANDREW HARRINGTON	ROBERT C. NIXDORF
DETAILS	BY	CHECKED
QUANTITIES	BY	CHECKED

ORIGINAL SCALE IN INCHES FOR REDUCED PLANS 0 1 2 3

PREPARED FOR THE STATE OF CALIFORNIA DEPARTMENT OF TRANSPORTATION

KAREN Y. WANG
PROJECT ENGINEER

BRIDGE NO
POST MILES 2.0

SAN FRANCISCO OAKLAND BAY BRIDGE EAST SPAN SEISMIC SAFETY PROJECT

IERBYS TEMPORARY IMPROVEMENTS - BUILDING

ELECTRICAL SCHEDULES AND PARTIAL RISER DIAGRAM

SHEET E601

UNIT: 04
PROJECT NUMBER AND PHASE: CONTRACT NO.: 0120F4

DISREGARD PRINTS BEARING EARLIER REVISION DATES

REVISION DATES ___ ___ ___ ___

SHEET 57 OF 66

C:\Users\cschurr\Documents\56185_Gateway Park - Central_cschurr.rvt

DIST	COUNTY	ROUTE	POST MILES TOTAL PROJECT	SHEET No	TOTAL SHEETS
04	ALA	80	2.0	1204bk	1204

REGISTERED ENGINEER 03/27/13 DATE

PLANS APPROVAL DATE

REGISTERED PROFESSIONAL ENGINEER ANDREW HARRINGTON No. E19367 ELECTRICAL STATE OF CALIFORNIA

The state of California or its officers or agents shall not be responsible for the accuracy or completeness of scanned copies of this plan sheet.

WSP • FLACK + KURTZ
405 HOWARD ST. #500
SAN FRANCISCO, CA 94106

(N) LIGHTING RELAY CABINET SCHEDULE: LRC-1

RELAY NUMBER	LIGHTING ZONE DESCRIPTION	BRANCH CIRCUIT	CONTROL ON	CONTROL OFF
1	HIGH BAY TRACK LIGHTING	P5/13aa	TS, LV	TS, SR, LV, PC
2	HIGH BAY TRACK LIGHTING	P5/15bb	TS, LV	TS, SR, LV, PC
3	HIGH BAY TRACK LIGHTING	P5/17cc	TS, LV	TS, SR, LV, PC
4	HIGH BAY TRACK LIGHTING	P5/19dd	TS, LV	TS, SR, LV, PC
5	HIGH BAY TRACK LIGHTING	P5/21ee	TS, LV	TS, SR, LV, PC
6	HIGH BAY TRACK LIGHTING	P5/23ff	TS, LV	TS, SR, LV, PC
7	HIGH BAY TRACK LIGHTING	P5/25gg	TS, LV	TS, SR, LV, PC
8	HIGH BAY TRACK LIGHTING	P5/27hh	TS, LV	TS, SR, LV, PC
9	HIGH BAY TRACK LIGHTING	P5/29jj	TS, LV	TS, SR, LV, PC
10	LOW BAY OPEN AREA LIGHTING	P5/31kk	TS, LV	TS, SR, LV
11	HIGH BAY EXISTING PENDANT LIGHTS	P5/33ll	TS, LV	TS, SR, LV, PC
12	EXTERIOR WALL MOUNTED LIGHTING	P5/9mm	TS, LV	TS, LV
13	EXTERIOR CANOPY LIGHTING (VIA INVERTER)	P5/9nn VIA INVERTER	TS, LV	TS, LV
14	LOW BAY CORRIDOR LIGHTING	P5/7oo	TS, LV	TS, SR, LV
15	EXTERIOR SITE LIGHTING	P5/5pp	TS, LV	TS, LV
16	HIGH BAY UNDERFLOOR LIGHTS	P5/9qq	TS, LV	TS, SR, LV
17	EXTERIOR SIGNAGE	P5/24ss	TS, LV	TS, LV
18	SPARE			

CONTROL TYPES: TS = TIME SCHEDULE, SR = SWEEP REPEAT, LI = LINE INTERRUPT SWITCH; LV = LOW VOLTAGE SWITCH, OS = OCCUPANCY SENSOR, PC = PHOTOCELL

SHEET NOTES

A. PROVIDE MULTIPLE POLE CIRCUIT BREAKERS OR APPROVED HANDLE TIE DEVICES FOR ALL MULTIWIRE BRANCH CIRCUITS TO SIMULTANEOUSLY DISCONNECT ALL UNGROUNDED CONDUCTORS, IN ACCORDANCE WITH THE CEC.

B. ALL NEW CIRCUIT BREAKERS, LOAD DESCRIPTIONS, AND ADDED LOAD VALUES ARE SHOWN IN REGULAR BLACK TEXT. EXISTING BRANCH CIRCUIT BREAKERS AND LOAD DESCRIPTIONS ARE SHOWN IN LIGHT GRAY TEXT.

C. REPLACE OR ADD BRANCH CIRCUIT BREAKERS AS SHOWN ON THIS DRAWING AND AS REQUIRED TO SERVE THE ELECTRICAL LOADS ADDED IN THIS SCOPE OF WORK.

D. THE EXISTING ELECTRICAL DEMAND LOADS ON PANELBOARDS IN THIS BUILDING ARE UNKNOWN. IN ACCORDANCE WITH THE CEC, CONTRACTOR SHALL VERIFY THAT EXISTING EQUIPMENT HAS SUFFICIENT CAPACITY TO SERVE THE NEW DEVICES AND EQUIPMENT. PANELBOARD LOAD TOTALS ON THIS DRAWING SHOW ONLY NEW ELECTRICAL LOADS ADDED AS PART OF THIS SCOPE OF WORK.

E. PROVIDE ACCURATE TYPEWRITTEN UPDATED PANELBOARD DIRECTORIES FOR ALL AFFECTED PANELS. INDICATE NEW AND EXISTING CIRCUITS, AS WELL AS SPARE CIRCUITS AND BREAKER SPACES. TURN "OFF" ALL SPARE BREAKERS.

PANEL: (E) PANEL #1 — 120/208V, 3 PHASE-4 WIRE — SURFACE MOUNTED
MAIN: (E)100A/3P — BUS AMPACITY: 225A — 10,000 AIC SYMMETRICAL

TYPE	DESCRIPTION	DEVICE	CKT	LOAD/PHASE (VA) A	B	C	A	B	C	CKT	DEVICE	DESCRIPTION	TYPE
	EXISTING LOAD	(E)20/1	1							2	(E)20/1	EXISTING LOAD	
	EXISTING LOAD	(E)20/1	3							4	(E)20/1	EXISTING LOAD	
	EXISTING LOAD	(E)20/1	5							6	(E)20/1	EXISTING LOAD	
	EXISTING LOAD	(E)20/1	7							8	(E)20/1	EXISTING LOAD	
	EXISTING LOAD	(E)20/1	9							10	(E)20/1	EXISTING LOAD	
	EXISTING LOAD	(E)20/1	11							12	(E)20/1	EXISTING LOAD	
	EXISTING LOAD	(E)20/2	13							14	(E)20/2	EXISTING LOAD	
	*		15							16	*	*	
R	LOW BAY PERIMETER CONV	(E)20/1	17			360			720	18	(E)20/1	CORR, RESTRM, & STRGE OUTLETS	R
E	MICROWAVE	(E)20/1	19	1,500						20	(E)20/1	SPARE	
R	AC CONV	(E)20/1	21		180			540		22	(E)20/1	HIGHBAY PERIMETER CONV	R
E	UC REFRIGERATOR	(E)20/1	23			500			720	24	(E)20/1	HIGHBAY PERIMETER CONV	R
SUBTOTAL (VA)				1,500	180	860	0	540	1,440	SUBTOTAL (VA)			
TOTAL ALL PHASES (VA)				PHASE A		PHASE B		PHASE C		TOTAL ALL PHASES (AMPS)			
4,520				1,500		720		2,300		13			

LOAD SUMMARY BY TYPE	CONNECTED LOAD	DEMAND FACTOR	NEC LOAD
E = EQUIPMENT	2,000 VA	1.00	2,000 VA
H = ELECTRIC HEAT	0 VA	1.00	0 VA
K = KITCHEN EQUIPMENT	0 VA	1.00	0 VA
L = LIGHTING	0 VA	1.25	0 VA
M = MOTOR	0 VA	1.00	0 VA
M = LARGEST MOTOR	0 VA	1.25	0 VA
R = RECEPTACLE	2,520 VA	1.00	2,520 VA

CONNECTED LOAD SUMMARY
4,520 VA
13 AMPS

NEC LOAD SUMMARY
4,520 VA
13 AMPS

PANEL: (N) PANEL P5 — 120/208V, 3 PHASE-4 WIRE — SURFACE MOUNTED
MAIN: 125A/3P — BUS AMPACITY: 225A — 10,000 AIC SYMMETRICAL

TYPE	DESCRIPTION	DEVICE	CKT	LOAD/PHASE (VA) A	B	C	A	B	C	CKT	DEVICE	DESCRIPTION	TYPE
R	ELEC CLST, RR, & CORR OUTLETS	20/1	1	720			540			2	20/1	HIGH BAY FLOOR BOX CONV	R
R	LOW BAY CONV	20/1	3		720			540		4	20/1	HIGH BAY FLOOR BOX CONV	R
L	SITE LIGHTING	20/1	5			1,200			540	6	20/1	HIGH BAY FLOOR BOX CONV	R
L	LOW BAY LIGHTING	20/1	7	1,394			540			8	20/1	HIGH BAY FLOOR BOX CONV	R
L	EXT BLDG MTD & UNDRFLR LIGHTS	20/1	9		916			540		10	20/1	HIGH BAY FLOOR BOX CONV	R
L	W3 EM LIGHTING & EXIT SIGNS	20/1	11			67			540	12	20/1	HIGH BAY FLOOR BOX CONV	R
L	TRACK LIGHTING	20/1	13	540			720			14	20/1	HIGH BAY PERIMETER CONV	R
L	TRACK LIGHTING	20/1	15		540			540		16	20/1	HIGH BAY PERIMETER CONV	R
L	TRACK LIGHTING	20/1	17			540			540	18	20/1	HIGH BAY PERIMETER CONV	R
L	TRACK LIGHTING	20/1	19	540			540			20	20/1	HIGH BAY PERIMETER CONV	R
L	TRACK LIGHTING	20/1	21		540			300		22	20/1	UH-1-1, -2, -3, -4, -5, -6	E
L	TRACK LIGHTING	20/1	23			540			480	24	20/1	EXTERIOR RECEPTACLE & SIGNAGE	L
L	TRACK LIGHTING	20/1	25	540						26	20/1	SPARE	
L	TRACK LIGHTING	20/1	27		540			540		28	20/1	LOW BAY PERIMETER CONV	R
L	TRACK LIGHTING	20/1	29			540			540	30	20/1	LOW BAY PERIMETER CONV	R
L	LOW BAY LIGHTING	20/1	31	1,720			739			32	15/1	EF-1-1, EF-1-2, SF-1-1	M
L	LOW & HIGH BAY LIGHTING	20/1	33		1,210			849		34	15/2	FCU-1-1, FCU-1-2, FCU-1-3	M
E	FACP CONTROL POWER	20/1	35			500			849	36	*	*	M
H	EWH-1	20/3	37	1,500			1,500			38	20/3	EWH-2	H
H	*	*	39		1,500			1,500		40	*	*	H
H	*	*	41			1,500			1,500	42	*	*	H
SUBTOTAL (VA)				6,954	5,966	4,887	4,579	4,809	4,989	SUBTOTAL (VA)			
TOTAL ALL PHASES (VA)				PHASE A		PHASE B		PHASE C		TOTAL ALL PHASES (AMPS)			
32,183				11,533		10,775		9,875		89			

LOAD SUMMARY BY TYPE	CONNECTED LOAD	DEMAND FACTOR	NEC LOAD
E = EQUIPMENT	800 VA	1.00	800 VA
H = ELECTRIC HEAT	9,000 VA	1.00	9,000 VA
K = KITCHEN EQUIPMENT	0 VA	1.00	0 VA
L = LIGHTING	11,847 VA	1.25	14809 VA
M = MOTOR	1,871 VA	1.00	1,871 VA
M = LARGEST MOTOR	566 VA	1.25	707 VA
R = RECEPTACLE	8,100 VA	1.00	8,100 VA

CONNECTED LOAD SUMMARY
32,183 VA
89 AMPS

NEC LOAD SUMMARY
35,286 VA
98 AMPS

05/03/13 PERMIT SET

3/27/2013 8:48:16 PM

SAN FRANCISCO OAKLAND BAY BRIDGE
EAST SPAN SEISMIC SAFETY PROJECT

Jaswinder Gill
DESIGN OVERSIGHT
03/27/13
SIGN OFF DATE

	BY	CHECKED
DESIGN	ANDREW HARRINGTON	ROBERT C. NIXDORF
DETAILS	BY	CHECKED
QUANTITIES	BY	CHECKED

PREPARED FOR THE STATE OF CALIFORNIA DEPARTMENT OF TRANSPORTATION

KAREN Y. WANG
PROJECT ENGINEER

BRIDGE NO
POST MILES 2.0

IERBYS TEMPORARY IMPROVEMENTS - BUILDING

ELECTRICAL SCHEDULES

SHEET E602

DESIGN DETAIL SHEET (ENGLISH) (REV. 03/14/12)

ORIGINAL SCALE IN INCHES FOR REDUCED PLANS 0 1 2 3

UNIT: 04
PROJECT NUMBER AND PHASE:
CONTRACT NO.: 0120F4

DISREGARD PRINTS BEARING EARLIER REVISION DATES

REVISION DATES

SHEET 58 OF 66

C:\Users\cschurr\Documents\56185_Gateway Park - Central_cschurr.rvt

DIST	COUNTY	ROUTE	POST MILES TOTAL PROJECT	SHEET No	TOTAL SHEETS
04	ALA	80	2.0	1204bl	1204

JRGK
REGISTERED ENGINEER

03/27/13
DATE

REGISTERED PROFESSIONAL ENGINEER JAMES R. GROVEK No. M 34898 MECHANICAL STATE OF CALIFORNIA

PLANS APPROVAL DATE

The state of California or its officers or agents shall not be responsible for the accuracy or completeness of scanned copies of this plan sheet.

WSP • FLACK + KURTZ
405 HOWARD ST. #500
SAN FRANCISCO, CA 94106

PLUMBING AND FIRE PROTECTION LEGEND AND ABBREVIATIONS

ABBREVIATIONS

AFF	ABOVE FINISHED FLOOR
AP	ACCESS PANEL
BLDG	BUILDING
BOB	BOTTOM OF THE BEAM
BOP	BOTTOM OF PIPE
CD	CONDENSATE DRAIN
CLG	CEILING
CO	CLEANOUT
CONN	CONNECTION
CONT	CONTINUATION
CW	COLD WATER
DF	DRINKING FOUNTAIN
DIA	DIAMETER
DN	DOWN
DR	DRAIN
DROP	DROP (WITHIN FLOOR)
DWG	DRAWING
(E)	EXISTING
EL	ELEVATION
ET	EXPANSION TANK
EWC	ELECTRIC WATER COOLER
EWH	ELECTRIC WATER HEATER
FCO	FLOOR CLEANOUT
FCU	FAN COIL UNIT
FD	FLOOR DRAIN
FHV	FIRE HOSE VALVE
FL	FLOOR
FSK	FLOOR SINK
FT	FEET
FU	FIXTURE UNIT
G	NATURAL GAS– LOW PRESSURE
GAL	GALLONS
GPM	GALLONS PER MINUTE
HW	HOT WATER
ID	INSIDE DIAMETER
IE	INVERT ELEVATION
IN	INCH
IW	INDIRECT WASTE
MAX	MAXIMUM
MIN	MINIMUM
(N)	NEW
OD	OUTSIDE DIAMETER
POC	POINT OF CONNECTION
PSI	POUNDS PER SQUARE INCH
RISE	RISE (WITH IN FLOOR)
SAN	SANITARY
SF	SQUARE FEET
SK	SINK
SPKR	SPRINKLER
TP	TRAP PRIMER
TPV	TRAP PRIMER VALVE
TYP	TYPICAL
UH	UNIT HEATER
UP	UP (PENETRATES FLOOR SLAB)
V	VENT
VB	VACUUM BREAKER
VR	VENT RISE
WF	WATER FILTER

LEGEND

	VACUUM BREAKER
	PRESSURE GAUGE AND COCK
	THERMOMETER
	WATER FLOW SWITCH
	VALVE (SPECIFICATION FOR TYPE)
	CHECK VALVE
	OS&Y (OUTSIDE SCREW & YOKE) VALVE
	VALVE WITH TAMPER SWITCH
	RELIEF VALVE
	ANGLE RELIEF VALVE
	UNION
	REDUCER
	ECCENTRIC REDUCER (E.R.)
	SLEEVE
	FLOOR DRAIN, AREA DRAIN, PLANT DRAIN, GARAGE DRAIN
	FLOOR SINK
	POINT OF CONNECTION (NEW TO EXISTING)
	FIRE HOSE VALVE
	SPRINKLER FLOOR CONTROL VALVE ASSEMBLY
	TAMPER SWITCH
# #	HYDRAULIC REF. POINTS # ELEMENT # NODE
	BOTTOM PIPE CONNECTION
	TOP PIPE CONNECTION
	VALVE IN VERTICAL
	P–TRAP
	CLEANOUT/PLUG
	PIPE DOWN
	PIPE UP
	CAP
	CHANGE IN PIPE ELEVATION
	ARROW INDICATES DIRECTION OF FLOW
	PITCH PIPE DOWN IN DIRECTION OF ARROW

PIPING LEGEND

POTABLE WATER

	DOMESTIC COLD WATER PIPING
	DOMESTIC HOT WATER PIPING
	DOMESTIC HOT WATER RETURN PIPING

MISCELLANEOUS

P 1	P = SAN, VENT STACK OR DOMESTIC WATER RISER F = FIRE STANDPIPE RISER RISER RISER NO.
CP 1	EQUIPMENT DESIGNATION EQUIPMENT EQUIPMENT NO.
1 P2.1	DETAIL DESIGNATION DETAIL NUMBER DWG. SHEET NO.
1	SHEET NOTE NUMBER
1	REVISION NUMBER

PIPING LEGEND (CONTINUED)

WASTE / VENT / STORM

SAN	SANITARY (ABOVE FLOOR)
SAN	SANITARY (BELOW FLOOR)
V	VENT PIPING
IW	INDIRECT WASTE PIPING
G	LOW PRESSURE GAS PIPING
CD	CONDENSATE DRAIN PIPING
	EXISTING PIPING
	EXISTING PIPING TO BE REMOVED

PIPING LEGEND (CONTINUED)

FIRE PROTECTION

(E)SP	EXISTING SPRINKLER PIPING
SP	SPRINKLER PIPING
FSP	FIRE STANDPIPE
DR	SPRINKLER DRAIN PIPING

APPLICABLE CODES AND STANDARDS

A. 2009 INTERNATIONAL BUILDING CODE.
B. 2009 INTERNATIONAL FIRE CODE.
C. 2010 CALIFORNIA BUILDING CODE.
D. 2010 CALIFORNIA FIRE CODE.
E. 2010 NFPA 13 "INSTALLATION OF SPRINKLER SYSTEMS".
F. 2007 NFPA 14 "INSTALLATION OF STANDPIPE AND HOSE SYSTEMS".
G. NFPA 25, 2006 CALIFORNIA EDITION BASED ON NFPA 25, 2002 EDITION "INSPECTION, TESTING AND MAINTENANCE OF WATER–BASED FIRE PROTECTION SYSTEMS".
H. 2008 NFPA 70 "NATIONAL ELECTRIC CODE".
I. 2010 NFPA 72 "NATIONAL FIRE ALARM CODE".
J. SAN FRANCISCO FIRE DEPARTMENT 2010 ADMINISTRATIVE BULLETINS.
K. CITY OF COUNTY OF SAN FRANCISCO MUNICIPAL CODE 2010 FIRE CODE.
L. FM GLOBAL PROPERTY LOSS PREVENTION DATA SHEETS: TO MEET INCREASED DENSITY BY FACTOR MUTUAL GLOBAL STANDARDS IS NOT REQUIRED FOR THIS PROJECT AT THIS TIME.
M. 2010 SAN FRANCISCO AMENDMENTS AND ORDINANCES.
N. 2010 CALIFORNIA PLUMBING CODE.
O. 2010 CALIFORNIA BUILDING STANDARDS CODE – TITLE 24, PART II CALIFORNIA GREEN BUILDING STANDARDS CODE (CALGREEN).
P. CALIFORNIA HEALTH AND SAFETY CODE, SECTION 116875(b)–CALIFORNIA LEAD–FREE PLUMBING LAW AB. 1953.
Q. STATE OF CALIFORNIA ENERGY CONSERVATION STANDARDS, TITLE 24.
R. CALIFORNIA HANDICAPPED CODE, ARTICLE 3 AND ADA REQUIREMENTS.

GENERAL NOTES

A. NO REVISIONS OR CHANGES OF ANY KIND MAY BE MADE TO THE CONSTRUCTION PLANS WITHOUT THE CONSENT OF OWNER AND ITS MANAGER. ANY PROPOSED REVISIONS OR CHANGES MUST BE SUBMITTED TO OWNER AND ITS MANAGER, FOR THEIR REVIEW AND APPROVAL PRIOR TO COMMENCEMENT OF SUCH CHANGES.

B. ALL TENANT'S CONTRACTOR'S WORK MUST BE SCHEDULED SO THAT IT IN NO WAY CONFLICTS WITH, INTERFERES WITH, OR IMPEDES THE QUIET AND PEACEFUL ENJOYMENT OF OTHER TENANTS, OR THE PROGRESS OF OWNER'S AND ITS MANAGER'S WORK OR OPERATIONS.

PLUMBING GENERAL NOTES

A. THE CONTRACTOR FOR THIS DIVISION OF WORKS IS REQUIRED TO READ THE SPECIFICATIONS AND REVIEW DRAWINGS FOR ALL DIVISIONS OF WORK AND IS RESPONSIBLE FOR THE COORDINATION OF THIS WORK AND THE WORK ALL SUBCONTRACTORS WITH ALL DIVISIONS OF WORK. IT IS CONTRACTOR'S RESPONSIBILITY TO PROVIDE ALL SUBCONTRACTOR'S WITH A COMPLETE SET OF BID DRAWINGS.

B. ALL PLUMBING WORK SHALL COMPLY WITH THE CURRENT APPROVED 2010 EDITION OF THE CALIFORNIA PLUMBING CODE .

C. THE CONTRACTOR, PRIOR TO BIDDING SHALL VISIT THE JOB SITE TO BE FAMILIARIZED WITH THE EXISTING PLUMBING INSTALLATIONS CONDITIONS, AND SYSTEMS RELATED TO THE SCOPE OF WORK.

D. ANY WORK INSTALLED INCORRECTLY, OR BEFORE APPROVAL HAS BEEN OFFICIALLY GRANTED FOR THOSE ITEMS AT ISSUE, SHALL BE CORRECTED BY THE PLUMBING CONTRACTOR AT NO CHARGE TO CLIENT.

E. ANY WORK SHOWN ON DRAWINGS IS IN PART SCHEMATIC, INTENDED TO CONVEY SCOPE OF WORK AND GENERAL LAYOUT. PIPING WORK SHOWN IS ESSENTIALLY DIAGRAMMATIC. CONTRACTOR SHALL INSTALL PLUMBING WORK TO SUIT FIELD CONDITIONS AND THE COORDINATION REQUIREMENTS OF OTHER TRADES.

F. ALL MATERIALS AND EQUIPMENT FURNISHED BY THE CONTRACTOR SHALL BE NEW AND COMPLETELY SERVICEABLE.

G. CONTRACTOR TO VERIFY EXACT LOCATION OF UTILITIES IN THE FIELD.

H. REFER TO ARCHITECTURAL DRAWINGS FOR EXACT LOCATIONS OF ALL PLUMBING FIXTURES.

I. DRAWINGS ARE DIAGRAMMATIC AND DO NOT NECESSARILY SHOW ALL OFFSETS OR FITTINGS REQUIRED. PLUMBING CONTRACTOR IS TO COORDINATE WITH ALL OTHER TRADES TO AVOID CONFLICTS.

J. OFFSETS IN VERTICAL DRAINAGE SHALL BE MADE AT 45 WHEREVER POSSIBLE.

K. IT IS THE CONTRACTOR'S RESPONSIBILITY TO INSTALL ALL WORK TO MEET OR EXCEED MINIMUM REQUIREMENTS STIPULATED IN CURRENT ISSUE OF APPLICABLE STANDARDS. CODES, OR REGULATIONS.

L. ALL FLOOR SINKS AND FLOOR DRAINS WILL HAVE TRAP PRIMERS AND VENT PIPE CONNECTION. CONTRACTOR TO PROVIDE 1/2" TRAP PRIMER LINE.

M. ABSOLUTE ACCURACY OF DRAWINGS AND SPECIFICATIONS CANNOT BE GUARANTEED. THE DRAWINGS ARE SCHEMATIC IN NATURE AND WHILE EVERY EFFORT HAS BEEN MADE TO COORDINATE THE LOCATIONS OF EQUIPMENT PIPING, DUCT, AND ETC. WITH OTHER TRADES IT IS THE RESPONSIBILITY OF THE CONTRACTOR TO COORDINATE EXACT REQUIREMENTS GOVERNED BY ACTUAL JOB CONDITION.

N. THE SANITARY DRAINAGE SYSTEMS SHALL BE TESTED IN ACCORDANCE WITH 2010 CALIFORNIA PLUMBING CODE, SECTION 712.0 "TESTING".

O. CLEANOUTS SHALL BE INSTALLED IN ACCORDANCE WITH 2010 CALIFORNIA PLUMBING CODE, SECTION 707.0 "CLEANOUTS".

FIRE PROTECTION GENERAL NOTES

A. THE CONTRACTOR FOR THIS DIVISION OF WORKS IS REQUIRED TO READ THE REPORTS, SPECIFICATIONS AND REVIEW DRAWINGS FOR ALL DIVISIONS OF WORK AND IS RESPONSIBLE FOR THE COORDINATION OF THIS WORK AND THE WORK ALL SUBCONTRACTORS WITH ALL DIVISIONS OF WORK. IT IS CONTRACTOR'S RESPONSIBILITY TO PROVIDE ALL SUBCONTRACTOR'S WITH A COMPLETE SET OF BID DRAWINGS.

B. THE INFORMATION ON THESE PLANS IS SHOWN TO PROVIDE SCOPE FOR THE DESIGN BUILD FIRE PROTECTION CONTRACTOR. FIRE PROTECTION CONTRACTOR IS TO PROVIDE HYDRAULICALLY CALCULATED DESIGN.

C. SPRINKLER HEADS SHALL BE COORDINATED WITH THE LIGHTING FIXTURES AND MECHANICAL DIFFUSERS. SPRINKLER HEAD AND FRAME ALIGNMENT IS REQUIRED IN ALL AREAS. ALL SPRINKLER HEADS ARE TO BE LOCATED AT THE CENTER OF THE CEILING TILE. PRIOR TO INSTALLATION SPRINKLER FINAL FINISH IS SUBJECT TO ARCHITECT'S APPROVAL. MISMATCHED POSITIONING OF SPRINKLER HEADS WILL NOT BE AN ACCEPTABLE STANDARD TO THE BUILDING.

D. SPRINKLERS SHALL ONLY BE PAINTED BY THE SPRINKLER MANUFACTURER.

E. WHERE SPRINKLERS HAVE HAD PAINT APPLIED BY OTHER THAN THE SPRINKLER MANUFACTURER, THEY SHALL BE REPLACED WITH NEW LISTED SPRINKLERS OF THE SAME CHARACTERISTICS, INCLUDING ORIFICE SIZE, THERMAL RESPONSE, AND WATER DISTRIBUTION.

F. ESCUTCHEONS SHALL BE PART OF A LISTED SPRINKLER ASSEMBLY.

G. COVER PLATES USED WITH CONCEALED SPRINKLERS SHALL BE PART OF THE LISTED SPRINKLER ASSEMBLY.

H. DURING CONSTRUCTION FOR THE TEMPORARY CONDITION OF PROTECTING NEWLY INSTALLED SPRINKLERS IN AREAS WHERE THE CEILINGS, ROOMS OR FIXTURES WILL BE PAINTED AN ORANGE PROTECTIVE CUP THAT PROTECTS THE GLASS BULB FROM DAMAGE FOR ALL SPRINKLERS SHALL COME FROM THE FACTORY.

I. THE CONDITION OF ALL SPRINKLERS MUST BE CONFIRMED AFTER CEILINGS ARE INSTALLED AND ROOMS AND CEILINGS ARE PAINTED. ALSO REMOVE PLASTIC PROTECTIVE COVERS PROVIDED BY THE MANUFACTURERS TO PROTECT SPRINKLER HEADS DURING CONSTRUCTION. USE OF ANY PROTECTIVE COVERING IS EXPRESSLY PROHIBITED.

J. AUTOMATIC SPRINKLER SYSTEMS WILL BE PROVIDED THROUGHOUT ALL PORTIONS OF THE PROJECTS DESIGNED IN ACCORDANCE WITH THE NFPA 13, 2010.

K. CONCEALED SPACES OF EXPOSED COMBUSTIBLE CONSTRUCTION SHALL BE PROTECTED BY SPRINKLERS EXCEPT IN CONCEALED SPACES WHERE SPRINKLERS ARE NOT REQUIRED TO BE INSTALLED BY SECTIONS 8.15.1.2.1 THROUGH 8.15.1.2.16 AND 8.15.6 OF THE NFPA 13, 2010.

L. WET–PIPE HYDRAULICALLY CALCULATED AUTOMATIC SPRINKLER SYSTEM WLL BE PROVIDED THROUGHOUT ENTIRE FLOOR. NEW HYDRAULIC CALCULATIONS SHALL BE SUBMITTED TO OWNER AND ITS MANAGER BEFORE COMMENCEMENT OF THE WORK WHEN SPRINKLER SYSTEM CHANGES ARE MADE THAT AFFECT PARTIAL OR ENTIRE SYSTEM HYDRAULIC CALCULATION

M. HANGERS, BRACING, AND RESTRAINT OF SYSTEM PIPING SHALL BE INSTALLED PER 2010 NFPA 13 CHAPTER 9 AND "PROTECTION OF PIPING AGAINST DAMAGE WHERE SUBJECT TO EARTHQUAKE" (2010 NFPA 13, SECTION 9.3).

05/03/13 PERMIT SET

3/27/2013 8:49:26 PM

SAN FRANCISCO OAKLAND BAY BRIDGE
EAST SPAN SEISMIC SAFETY PROJECT

Jaswinder Gill
DESIGN OVERSIGHT

03/27/13
SIGN OFF DATE

	BY	CHECKED
DESIGN	JOJI THOMAS	ROBERT C. NIXDORF
DETAILS	BY	CHECKED
QUANTITIES	BY	CHECKED

PREPARED FOR THE
STATE OF CALIFORNIA
DEPARTMENT OF TRANSPORTATION

KAREN Y. WANG
PROJECT ENGINEER

BRIDGE NO

POST MILES
2.0

IERBYS TEMPORARY IMPROVEMENTS - BUILDING

PLUMBING & FIRE PROTECTION LEGEND AND ABBREVIATIONS

SHEET
P000

DESIGN DETAIL SHEET (ENGLISH) (REV. 03/14/12)

ORIGINAL SCALE IN INCHES FOR REDUCED PLANS 0 1 2 3

UNIT: 04
PROJECT NUMBER AND PHASE:
CONTRACT NO.: 0120F4

DISREGARD PRINTS BEARING EARLIER REVISION DATES

REVISION DATES

SHEET 59 OF 66

C:\Users\cschurr\Documents\56185_Gateway Park - Central_cschurr.rvt

DIST	COUNTY	ROUTE	POST MILES TOTAL PROJECT	SHEET No	TOTAL SHEETS
04	ALA	80	2.0	1204bm	1204

JRGK
REGISTERED ENGINEER
03/27/13
DATE

REGISTERED PROFESSIONAL ENGINEER JAMES R. GROVEK No. M 34898 MECHANICAL STATE OF CALIFORNIA

PLANS APPROVAL DATE

The state of California or its officers or agents shall not be responsible for the accuracy or completeness of scanned copies of this plan sheet.

WSP • FLACK + KURTZ
405 HOWARD ST. #500
SAN FRANCISCO, CA 94106

PLUMBING FIXTURE SCHEDULE

ITEM	DESCRIPTION	CONNECTIONS S	CONNECTIONS V	CONNECTIONS CW	CONNECTIONS HW	REMARKS
WC-1	WATER CLOSET	3"	2"	1-1/4"	–	VITREOUS CHINA WALL HUNG, SIPHON JET, 1.28GPF
HWC-1	WATER CLOSET	3"	2"	1-1/4"	–	ADA COMPLAINT, VITREOUS CHINA WALL HUNG, SIPHON JET, 1.28GPF
UR-1	URINAL	2"	1-1/2"	3/4"	–	VITREOUS CHINA WALL HUNG, SIPHON JET, 0.125 GPF
UR-2	URINAL	2"	1-1/2"	3/4"	–	ADA COMPLAINT, VITREOUS CHINA WALL HUNG, SIPHON JET, 0.125 GPF
L-1	LAVATORY	2"	1-1/2"	1/2"	1/2"	ADA COMPLAINT, UNDER COUNTER MOUNT, 0.5GPM SENSOR OPERATED FAUCET.
SK-1	SINK	2"	1-1/2"	1/2"	1/2"	NO GARBAGE DISPOSER, 0.5 GPM FAUCET
MS-1	MOP SINK	2"	1-1/2"	1/2"	1/2"	–

PLUMBING DRAIN AND CLEANOUT SCHEDULE

ITEM	DESCRIPTION	MANUFACTURER	MODEL NUMBER	STRAINER TYPE	REMARKS
FD-1	FLOOR DRAIN	JR SMITH	2005Y-B-U-HP-NB	5" SQUARE TOP, ADJUSTABLE STRAINER HEAD, WIDE FLANGED STRAINER.	TRAP PRIMER, NICKEL BRONZE, VANDAL PROOF SCREWS,HEELPROOF GRATE.
WCO	WALL CLEAN OUT	JR SMITH	4532S	ROUND COVER PLATE	STAINLESS STEEL ACCESS COVER,TAPERED THREAD BRONZE PLUG.

PLUMBING WATER HEATER SCHEDULE

ITEM	LOCATION/ SERVICE	TANK CAPACITY	MINIMUM FLOW TO ACTIVATE	KW	VOLTS	APPLICATION	REMARKS
EWH-1	MEN'S RESTROOM	15 GALLON	–	4.5	208	STORAGE TYPE	A.O.SMITH / MODEL DEL-15S-4.5, DUAL ELEMENT MODEL WIRED FOR 3 PH/ 208 V
EWH-2	WOMEN'S RESTROOM	15 GALLON	–	4.5	208	STORAGE TYPE	A.O.SMITH / MODEL DEL-15S-4.5, DUAL ELEMENT MODEL WIRED FOR 3 PH/ 208 V

PLUMBING EXPANSION TANK SCHEDULE

ITEM	LOCATION/ SERVICE	DESCRIPTION	REMARKS
ET-1	MEN'S RESTROOM	EXPANSION TANK – AMTROL THERM-X-TROL MODEL A-ST-12 OR EQUAL	–
ET-2	WOMEN'S RESTROOM	EXPANSION TANK – AMTROL THERM-X-TROL MODEL A-ST-12 OR EQUAL	–

05/03/13 PERMIT SET

3/27/2013 8:49:32 PM

SAN FRANCISCO OAKLAND BAY BRIDGE
EAST SPAN SEISMIC SAFETY PROJECT

Jaswinder Gill
DESIGN OVERSIGHT
03/27/13
SIGN OFF DATE

	BY	CHECKED
DESIGN	JOJI THOMAS	ROBERT C. NIXDORF
DETAILS		
QUANTITIES		

PREPARED FOR THE
STATE OF CALIFORNIA
DEPARTMENT OF TRANSPORTATION

KAREN Y. WANG
PROJECT ENGINEER

BRIDGE NO
POST MILES 2.0

IERBYS TEMPORARY IMPROVEMENTS - BUILDING

PLUMBING & FIRE PROTECTION SCHEDULES

SHEET P001

DESIGN DETAIL SHEET (ENGLISH) (REV. 03/14/12)

ORIGINAL SCALE IN INCHES FOR REDUCED PLANS 0 1 2 3

UNIT: 04
PROJECT NUMBER AND PHASE:
CONTRACT NO.: 0120F4

DISREGARD PRINTS BEARING EARLIER REVISION DATES

REVISION DATES ___ ___ ___ ___

SHEET 60 OF 66

C:\Users\cschurr\Documents\56185_Gateway Park - Central_cschurr.rvt

DIST	COUNTY	ROUTE	POST MILES TOTAL PROJECT	SHEET No	TOTAL SHEETS
04	ALA	80	2.0	1204bn	1204

JRGK
REGISTERED ENGINEER
03/27/13
DATE

REGISTERED PROFESSIONAL ENGINEER JAMES R. GROVEK No. M 34898 MECHANICAL STATE OF CALIFORNIA

PLANS APPROVAL DATE

The state of California or its officers or agents shall not be responsible for the accuracy or completeness of scanned copies of this plan sheet.

WSP • FLACK + KURT
405 HOWARD ST. #500
SAN FRANCISCO, CA 94106

SHEET NOTES

A. ALL SANITARY DRAIN LOCATIONS, TYPE OF PIPE & CONDITION SHOULD BE CHECKED.

NUMBERED NOTES

1. RELOCATE OR DEMOLISH EXISTING PIPE (AS APPROPRIATE) CROSSING THE DOORS OR OPERABLE WINDOWS ON EXTERIOR OF THE BUILDING TO ALLOW FULL RANGE OF WINDOW OR DOOR OPERATION. CONFIRM EAXCT LOCATION WITH ARCHITECT.

1 DEMOLITION FLOOR PLAN
1/8"=1'-0"

05/03/13 PERMIT SET

N

3/27/2013 8:49:46 PM

SAN FRANCISCO OAKLAND BAY BRIDGE
EAST SPAN SEISMIC SAFETY PROJECT

Jaswinder Gill
DESIGN OVERSIGHT
03/27/13
SIGN OFF DATE

	BY	CHECKED
DESIGN	JOJI THOMAS	ROBERT C. NIXDORF
DETAILS	BY	CHECKED
QUANTITIES	BY	CHECKED

PREPARED FOR THE
STATE OF CALIFORNIA
DEPARTMENT OF TRANSPORTATION

KAREN Y. WANG
PROJECT ENGINEER

BRIDGE NO
POST MILES 2.0

IERBYS TEMPORARY IMPROVEMENTS - BUILDING
PLUMBING & FIRE PROTECTION DEMOLITION FLOOR PLAN

SHEET P101

DESIGN DETAIL SHEET (ENGLISH) (REV. 03/14/12)

ORIGINAL SCALE IN INCHES FOR REDUCED PLANS 0 1 2 3

UNIT: 04
PROJECT NUMBER AND PHASE:
CONTRACT NO.: 0120F4

DISREGARD PRINTS BEARING EARLIER REVISION DATES

REVISION DATES				SHEET	OF
				61	66

C:\Users\cschurr\Documents\56185_Gateway Park - Central_cschurr.rvt

DIST	COUNTY	ROUTE	POST MILES TOTAL PROJECT	SHEET No	TOTAL SHEETS
04	ALA	80	2.0	1204bo	1204

JRGK
REGISTERED ENGINEER
03/27/13
DATE

REGISTERED PROFESSIONAL ENGINEER
JAMES R. GROVEK
No. M 34898
MECHANICAL
STATE OF CALIFORNIA

PLANS APPROVAL DATE

The state of California or its officers or agents shall not be responsible for the accuracy or completeness of scanned copies of this plan sheet.

WSP • FLACK + KURTZ
405 HOWARD ST. #500
SAN FRANCISCO, CA 94106

SHEET NOTES

A. ALL SANITARY DRAIN LOCATIONS, TYPE OF PIPE & CONDITION SHOULD BE CHECKED.

NUMBERED NOTES

1. 3/4"CD & PROVIDE 3/4" SECONDARY DRAIN.
2. 1"CD & PROVIDE 1" SECONDARY DRAIN.
3. VERIFY LOCATION IN FIELD.

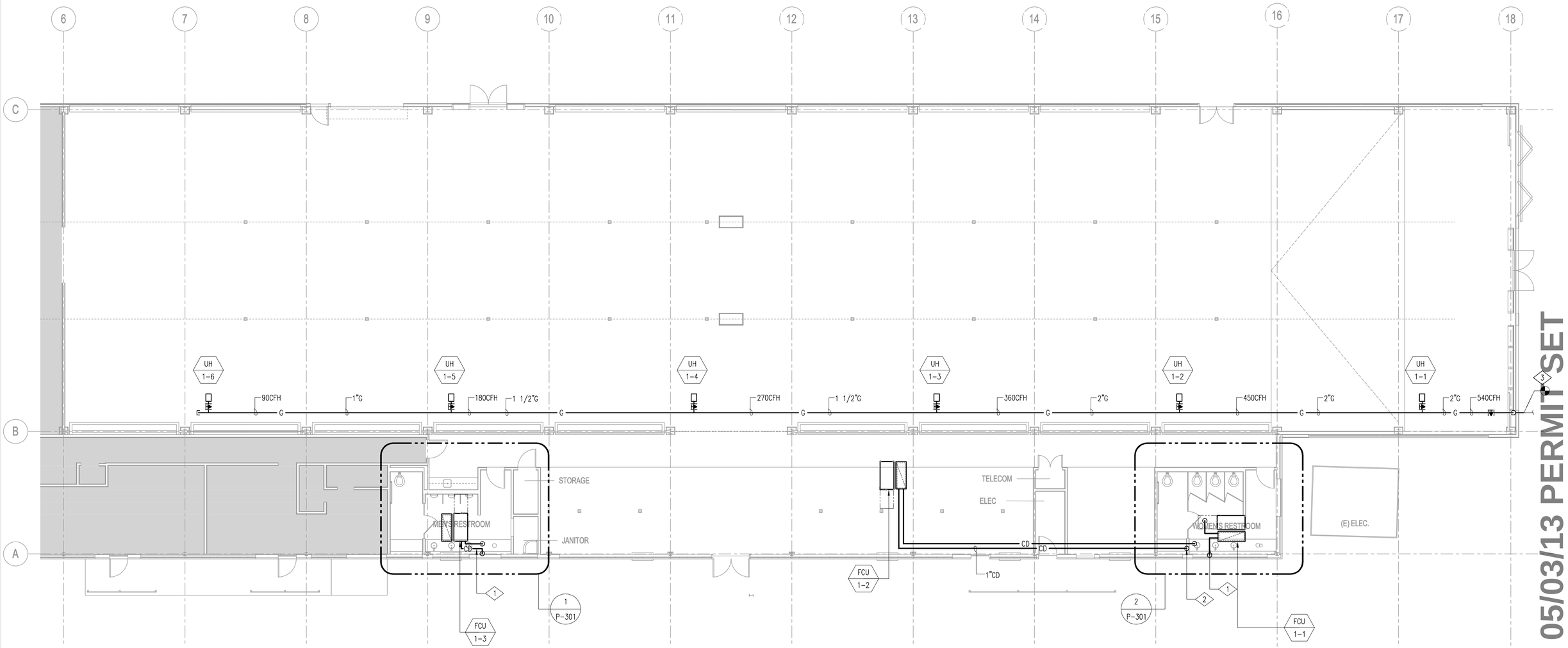

1 CONSTRUCTION FLOOR PLAN
1/8"=1'-0"

05/03/13 PERMIT SET

3/27/2013 8:49:51 PM

SAN FRANCISCO OAKLAND BAY BRIDGE
EAST SPAN SEISMIC SAFETY PROJECT

IERBYS TEMPORARY IMPROVEMENTS - BUILDING

PLUMBING & FIRE PROTECTION CONSTRUCTION FLOOR PLAN

SHEET P201

Jaswinder Gill
DESIGN OVERSIGHT
03/27/13
SIGN OFF DATE

	BY	CHECKED
DESIGN	JOJI THOMAS	ROBERT C. NIXDORF
DETAILS	BY	CHECKED
QUANTITIES	BY	CHECKED

PREPARED FOR THE
STATE OF CALIFORNIA
DEPARTMENT OF TRANSPORTATION

KAREN Y. WANG
PROJECT ENGINEER

BRIDGE NO
POST MILES 2.0

DESIGN DETAIL SHEET (ENGLISH) (REV. 03/14/12)

ORIGINAL SCALE IN INCHES FOR REDUCED PLANS 0 1 2 3

UNIT: 04
PROJECT NUMBER AND PHASE:
CONTRACT NO.: 0120F4

DISREGARD PRINTS BEARING EARLIER REVISION DATES

REVISION DATES

SHEET 62 OF 66

C:\Users\cschurr\Documents\56185_Gateway Park - Central_cschurr.rvt

DIST	COUNTY	ROUTE	POST MILES TOTAL PROJECT	SHEET No	TOTAL SHEETS
04	ALA	80	2.0	1204bp	1204

JRGK
REGISTERED ENGINEER

03/27/13
DATE

REGISTERED PROFESSIONAL ENGINEER
JAMES R. GROVEK
No. M 34898
MECHANICAL
STATE OF CALIFORNIA

PLANS APPROVAL DATE

The state of California or its officers or agents shall not be responsible for the accuracy or completeness of scanned copies of this plan sheet.

WSP • FLACK + KURTZ
405 HOWARD ST. #500
SAN FRANCISCO, CA 94106

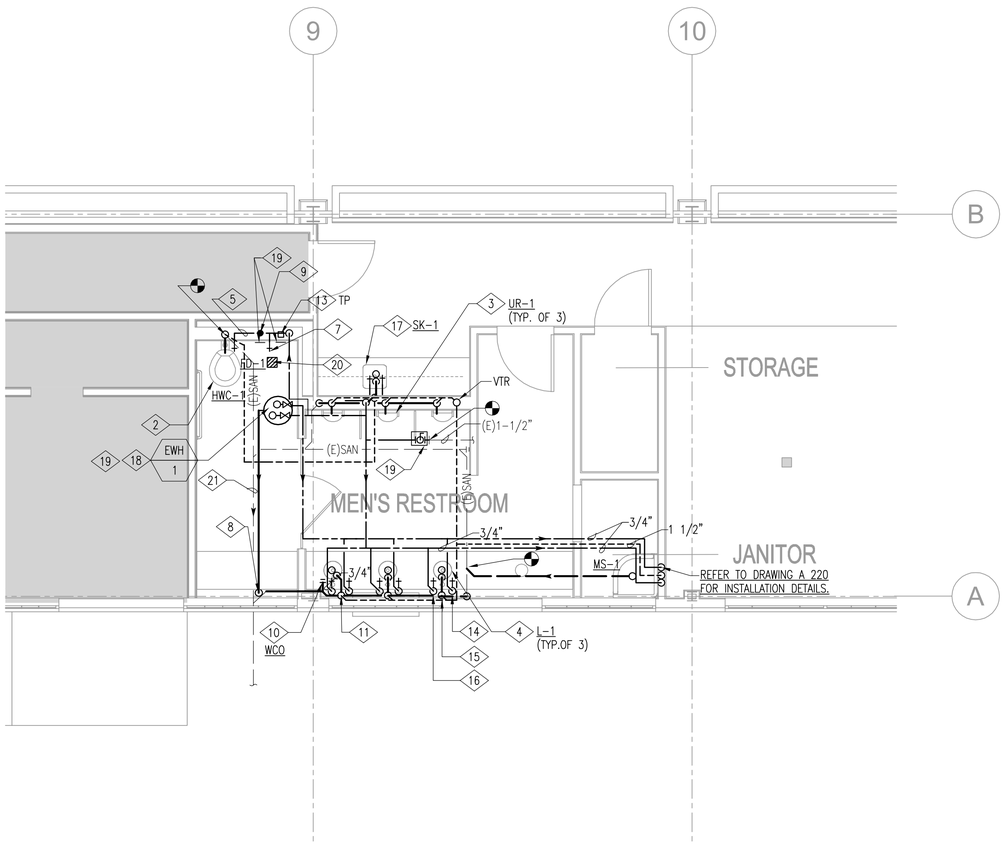

1 ENLARGED PLAN
1/4"=1'-0"

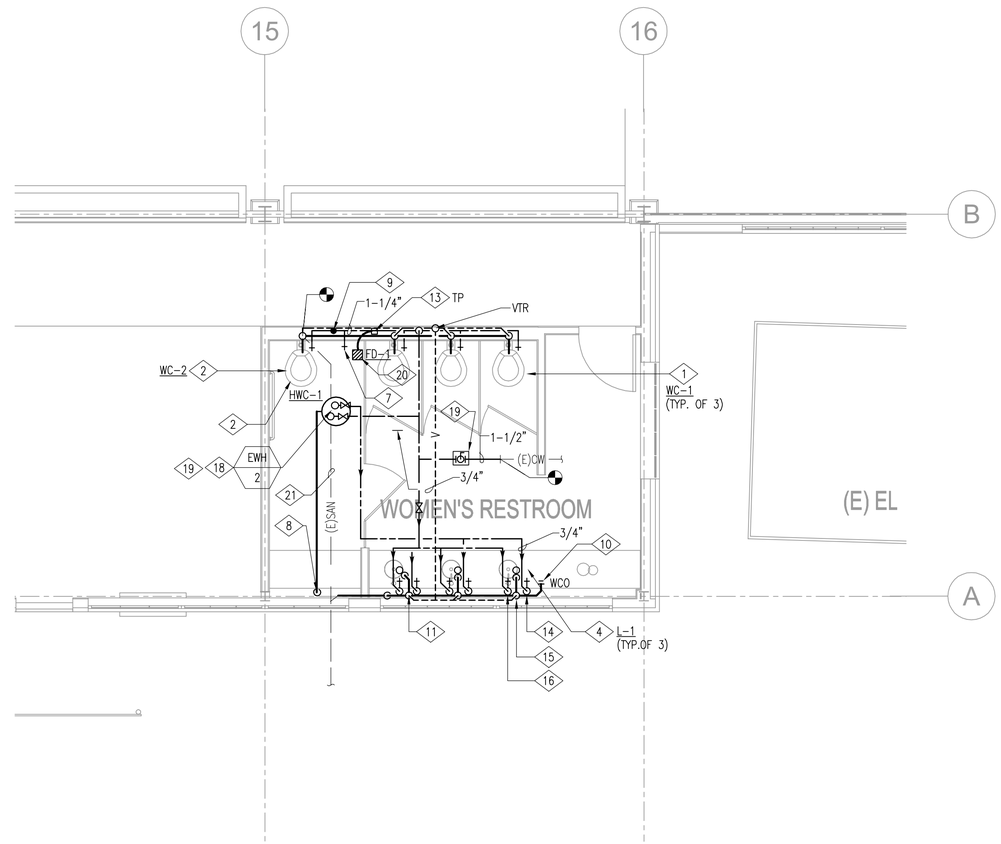

2 ENLARGED PLAN
1/4"=1'-0"

SHEET NOTES

A. ALL SANITARY DRAIN LOCATIONS, TYPE OF PIPE & CONDITION SHOULD BE CHECKED.

NUMBERED NOTES

1. (WC-1) WATER CLOSET. 3"SAN DN, 2"V UP, 1-1/4"CW.
2. (HWC-1) WATER CLOSET (ADA). 3"SAN DN, 2"V UP, 1-1/4"CW.
3. (UR-1) URINAL. 2"SAN DN, 1-1/2"V UP, 3/4"CW.
4. (L-1) LAVATORY. 2"SAN DN, 1-1/2"V UP, 1/2"TW.
5. 1-1/4"CW TO FLUSH VALVE.
6. NOT USED.
7. (HB-1) 3/4"CW.
8. REFER TO P601 DETAIL 11 & 12 FOR DRAIN DETAILS
9. SHOCK ABSORBER.
10. WALL CLEANOUT.
11. 2"V DROP.
12. RUN PIPING BELOW FLOOR.
13. TRAP PRIMER VALVE BEHIND ACCESS PANEL. COORDINATE ACCESS PANEL LOCATION WITH ARCHITECTURAL DRAWINGS.
14. 1/2"HW DROP DN.
15. 1-1/2" VENT DROP TO FIXTURES INDICATED.
16. 1/2"CW DROP DN.
17. (SK-1) SINK. 2"SAN DN, 1-1/2"V UP, 1/2"CW, 1/2"HW.
18. ELECTRIC WATER HEATER ABOVE CEILING LEVEL.FOR INSTALLATION DETAILS,REFER TO DETAIL10 ON DWG P601 & FOR DRAIN DETAILS, REFER TO DETAIL 11 & 12, DWG P601
19. ACCESS PANEL. COORDINATE WITH ARCHITECTUAL DRAWINGS.
20. LOCATE FD-1 PER ARCHITECTURAL DRAWINGS.
21. EXISTING DRAIN LINE BELOW SLAB - TO REMAIN.

05/03/13 PERMIT SET

N

3/27/2013 8:49:56 PM

Jaswinder Gill
DESIGN OVERSIGHT

03/27/13
SIGN OFF DATE

DESIGN DETAIL SHEET (ENGLISH) (REV. 03/14/12)

	BY	CHECKED
DESIGN	JOJI THOMAS	ROBERT C. NIXDORF
DETAILS	BY	CHECKED
QUANTITIES	BY	CHECKED

ORIGINAL SCALE IN INCHES FOR REDUCED PLANS 0 1 2 3

PREPARED FOR THE
STATE OF CALIFORNIA
DEPARTMENT OF TRANSPORTATION

KAREN Y. WANG
PROJECT ENGINEER

BRIDGE NO

POST MILES
2.0

SAN FRANCISCO OAKLAND BAY BRIDGE
EAST SPAN SEISMIC SAFETY PROJECT

IERBYS TEMPORARY IMPROVEMENTS - BUILDING

PLUMBING & FIRE PROTECTION ENLARGED PLANS

SHEET
P301

UNIT: 04
PROJECT NUMBER AND PHASE:
CONTRACT NO.: 0120F4

DISREGARD PRINTS BEARING EARLIER REVISION DATES

REVISION DATES

SHEET	OF
63	66

C:\Users\cschurr\Documents\56185_Gateway Park - Central_cschurr.rvt

DIST	COUNTY	ROUTE	POST MILES TOTAL PROJECT	SHEET No	TOTAL SHEETS
04	ALA	80	2.0	1204bq	1204

JRGK
REGISTERED ENGINEER — DATE 03/27/13

PLANS APPROVAL DATE

REGISTERED PROFESSIONAL ENGINEER — JAMES R. GROVEK — No. M 34898 — MECHANICAL — STATE OF CALIFORNIA

The state of California or its officers or agents shall not be responsible for the accuracy or completeness of scanned copies of this plan sheet.

WSP • FLACK + KURTZ
405 HOWARD ST. #500
SAN FRANCISCO, CA 94106

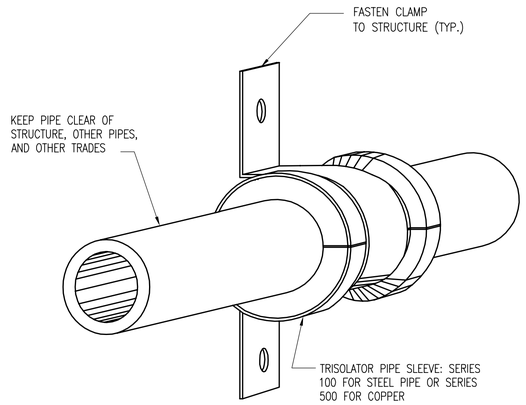

5 ATTACHMENT OF PLUMBING PIPES GREATER THAN 1¼" DIAMETER — NO SCALE

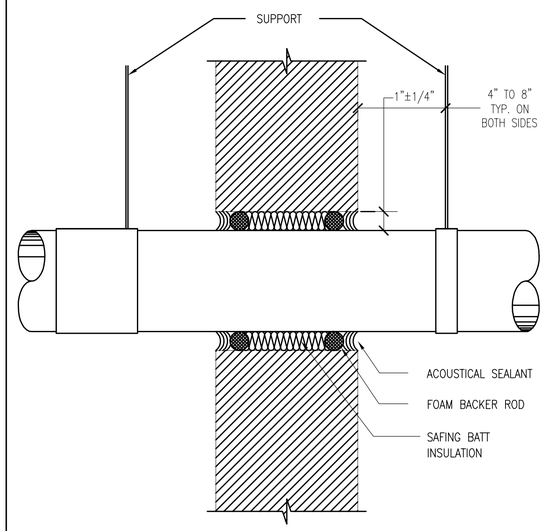

(PIPE 3" DIAMETER. OR GREATER)

6 TYPICAL PIPE PENETRATION THROUGH SOUND–RATED CONSTRUCTION — NO SCALE

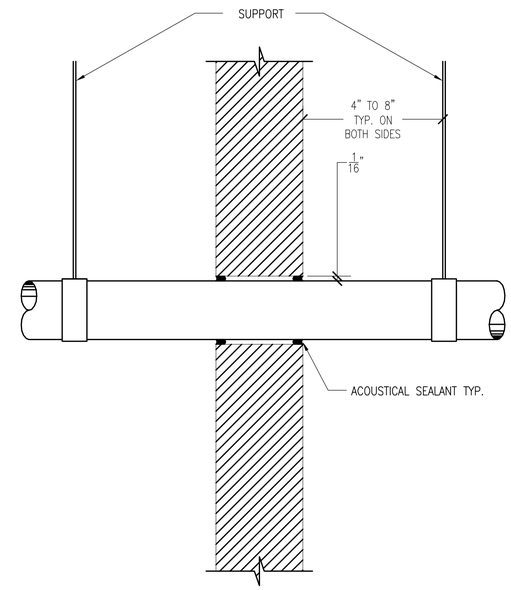

(PIPE 3" DIAMETER OR LESS)

7 TYPICAL PIPE PENETRATION THROUGH SOUND–RATED CONSTRUCTION — NO SCALE

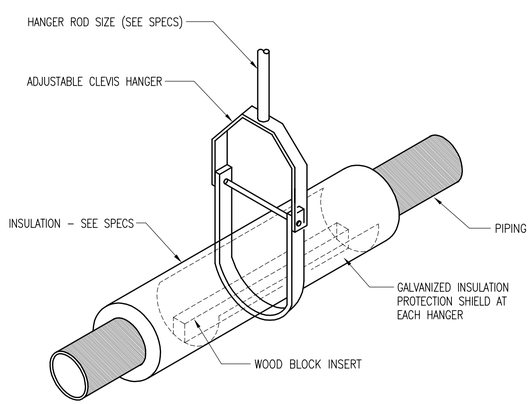

NOTE:

1. SEE STRUCTURAL DRAWINGS FOR HANGER ROD CONNECTION TO STRUCTURE

9 PIPE HANGER AND INSULATION DETAIL — NO SCALE

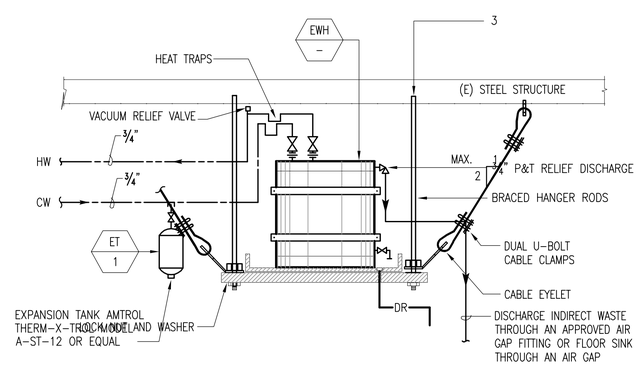

NOTE:

1. USE 3/8" DIA. GALVANIZED THREADED ROADS, UNISTRUT P 5000 OR EQUAL FOR TRAPEZE.
2. ATTACH TO (E) STRUCTURE.

10 ELECTRIC WATER HEATER EWH–1 ABOVE CEILING — NO SCALE

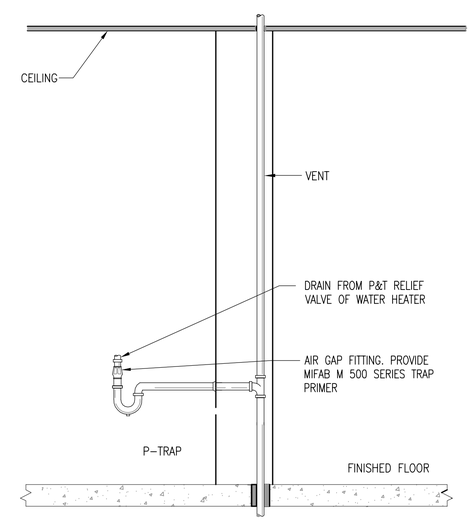

11 INDIRECT DRAIN DETAIL– WATER HEATER — NO SCALE

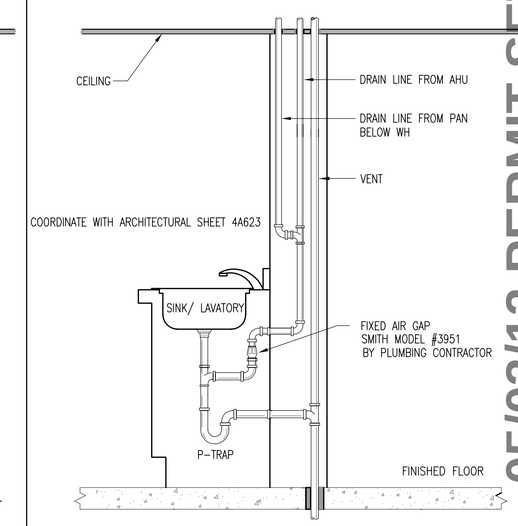

12 INDIRECT DRAIN DETAIL — NO SCALE

05/03/13 PERMIT SET

3/27/2013 8:50:02 PM

SAN FRANCISCO OAKLAND BAY BRIDGE
EAST SPAN SEISMIC SAFETY PROJECT

Jaswinder Gill
DESIGN OVERSIGHT
03/27/13
SIGN OFF DATE

	BY	CHECKED
DESIGN	JOJI THOMAS	ROBERT C. NIXDORF
DETAILS	BY	CHECKED
QUANTITIES	BY	CHECKED

PREPARED FOR THE
STATE OF CALIFORNIA
DEPARTMENT OF TRANSPORTATION

KAREN Y. WANG
PROJECT ENGINEER

BRIDGE NO
POST MILES 2.0

IERBYS TEMPORARY IMPROVEMENTS - BUILDING
PLUMBING & FIRE PROTECTION DETAILS

SHEET P601

DESIGN DETAIL SHEET (ENGLISH) (REV. 03/14/12)

ORIGINAL SCALE IN INCHES FOR REDUCED PLANS 0 1 2 3

UNIT: 04
PROJECT NUMBER AND PHASE: CONTRACT NO.: 0120F4

DISREGARD PRINTS BEARING EARLIER REVISION DATES

REVISION DATES				SHEET	OF
				64	66

C:\Users\cschurr\Documents\56185_Gateway Park - Central_cschurr.rvt

DIST	COUNTY	ROUTE	POST MILES TOTAL PROJECT	SHEET No	TOTAL SHEETS
04	ALA	80	2.0	1204br	1204

JRGK
REGISTERED ENGINEER

03/27/13
DATE

REGISTERED PROFESSIONAL ENGINEER
JAMES R. GROVEK
No. M 34898
MECHANICAL
STATE OF CALIFORNIA

PLANS APPROVAL DATE

The state of California or its officers or agents shall not be responsible for the accuracy or completeness of scanned copies of this plan sheet.

WSP • FLACK + KURTZ
405 HOWARD ST. #500
SAN FRANCISCO, CA 94106

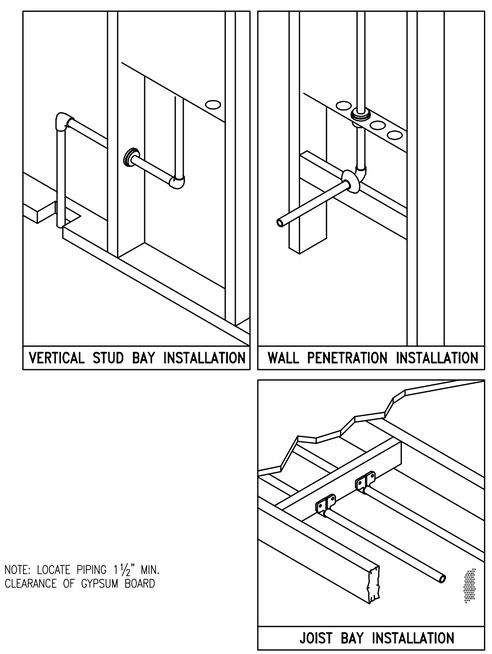

NOTE: LOCATE PIPING 1½" MIN. CLEARANCE OF GYPSUM BOARD

4 ACOUSTO – PLUMBING SYSTEM INSTALLATION — NO SCALE

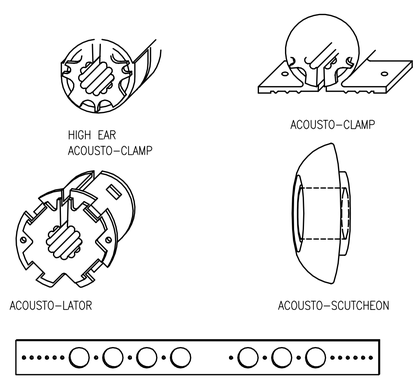

3 ACOUSTO – PLUMBING SYSTEM COMPONENTS — NO SCALE

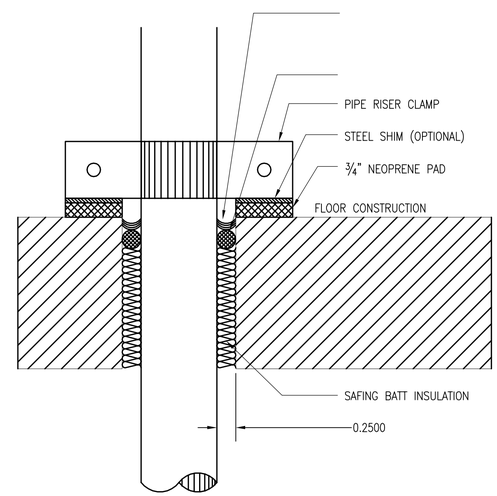

NOTE: LOCATE PIPING 1½" MIN. CLEARANCE OF GYPSUM BOARD

2 PIPE ISOLATION AT FLOOR FOR WASTE PIPES AND RAIN LEADERS — NO SCALE

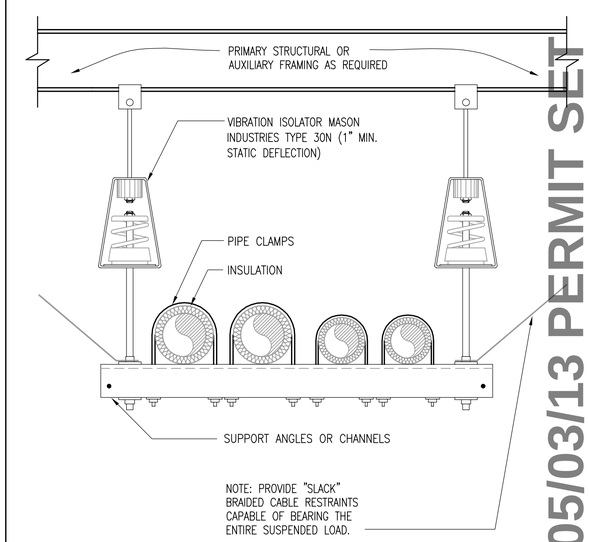

1 TRAPEZE PIPING OR EQUIPMENT SUPPORT — NO SCALE

05/03/13 PERMIT SET

3/27/2013 8:50:07 PM

SAN FRANCISCO OAKLAND BAY BRIDGE
EAST SPAN SEISMIC SAFETY PROJECT

Jaswinder Gill
DESIGN OVERSIGHT

03/27/13
SIGN OFF DATE

	BY	CHECKED
DESIGN	JOJI THOMAS	ROBERT C. NIXDORF
DETAILS	BY	CHECKED
QUANTITIES	BY	CHECKED

PREPARED FOR THE
STATE OF CALIFORNIA
DEPARTMENT OF TRANSPORTATION

KAREN Y. WANG
PROJECT ENGINEER

BRIDGE NO
POST MILES 2.0

IERBYS TEMPORARY IMPROVEMENTS - BUILDING

PLUMBING & FIRE PROTECTION DETAILS

SHEET P602

DESIGN DETAIL SHEET (ENGLISH) (REV. 03/14/12)

ORIGINAL SCALE IN INCHES FOR REDUCED PLANS 0 1 2 3

UNIT: 04
PROJECT NUMBER AND PHASE:
CONTRACT NO.: 0120F4

DISREGARD PRINTS BEARING EARLIER REVISION DATES

REVISION DATES

SHEET 65 OF 66

C:\Users\cschurr\Documents\56185_Gateway Park - Central_cschurr.rvt

DIST	COUNTY	ROUTE	POST MILES TOTAL PROJECT	SHEET No	TOTAL SHEETS
04	ALA	80	2.0	1204bs	1204

JRGK
REGISTERED ENGINEER

03/27/13
DATE

REGISTERED PROFESSIONAL ENGINEER
JAMES R. GROVEK
No. M 34898
MECHANICAL
STATE OF CALIFORNIA

PLANS APPROVAL DATE

The state of California or its officers or agents shall not be responsible for the accuracy or completeness of scanned copies of this plan sheet.

WSP • FLACK + KURTZ
405 HOWARD ST. #500
SAN FRANCISCO, CA 94106

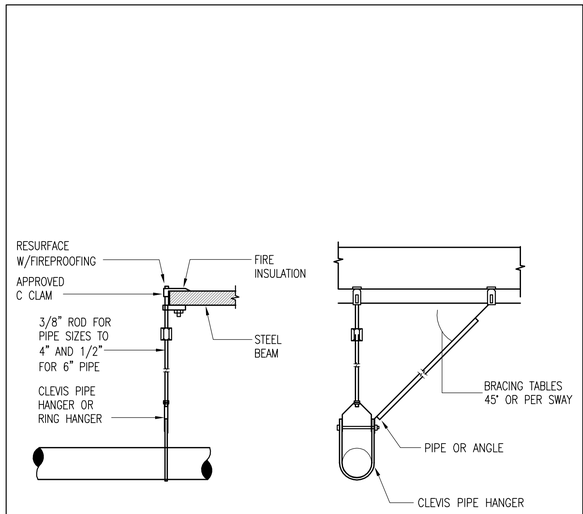

3 SWAY BRACING DETAIL — NO SCALE

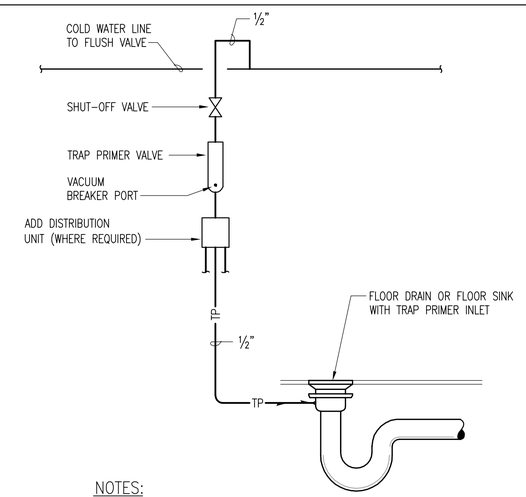

NOTES:

1. PROVIDE ACCESS PANEL IN WALLS AT TRAP PRIMER UNIT LOCATIONS.
2. TRAP PRIMER VALVE SHALL BE MOUNTED ONE FOOT ABOVE THE FINISHED FLOOR FOR EVERY 20 FEET OF PRIMER LINE.
3. INSTALL TRAP PRIMER PIPING AND UNIT PER MANUFACTURER'S RECOMMENDATIONS. PIPING MUST SLOPE TO POINT OF CONNECTION TO DRAIN WITHOUT TRAPS IN PIPING

2 TRAP PRIMER PIPING DETAILS — NO SCALE

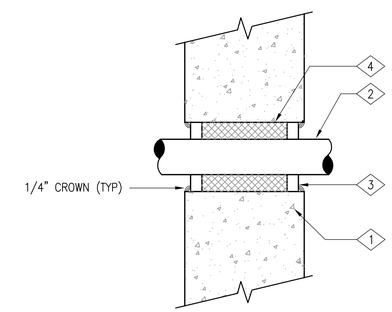

NUMBERED NOTES

1. CONCRETE OR CONCRETE BLOCK WALL
2. STEEL, IRON OR COPPER PIPE (UNINSULATED)
3. SPEC SEAL OR EQUAL PUTTY INSTALLED TO A DEPTH OF 3/4"
4. FIBERGLASS FORMING MATERIAL PACKED INTO WALL CAVITY

SHEET NOTE

1. SYSTEM SHALL MEET REQUIREMENTS OF ASTM E814 (UL1479) AND UL SYSTEM WJ 1020

1 — NO SCALE

05/03/13 PERMIT SET

3/27/2013 8:50:13 PM

SAN FRANCISCO OAKLAND BAY BRIDGE
EAST SPAN SEISMIC SAFETY PROJECT

Jaswinder Gill
DESIGN OVERSIGHT
03/27/13
SIGN OFF DATE

	BY	CHECKED
DESIGN	JOJI THOMAS	ROBERT C. NIXDORF
DETAILS	BY	CHECKED
QUANTITIES	BY	CHECKED

PREPARED FOR THE
STATE OF CALIFORNIA
DEPARTMENT OF TRANSPORTATION

KAREN Y. WANG
PROJECT ENGINEER

BRIDGE NO
POST MILES 2.0

IERBYS TEMPORARY IMPROVEMENTS - BUILDING
PLUMBING & FIRE PROTECTION DETAILS

SHEET P603

DESIGN DETAIL SHEET (ENGLISH) (REV. 03/14/12)

ORIGINAL SCALE IN INCHES FOR REDUCED PLANS 0 1 2 3

UNIT: 04
PROJECT NUMBER AND PHASE:
CONTRACT NO.: 0120F4

DISREGARD PRINTS BEARING EARLIER REVISION DATES

REVISION DATES				SHEET	OF
				66	66

C:\Users\cschurr\Documents\56185_Gateway Park - Central_cschurr.rvt

Final Construction Document Specifications

For

IERBYS Temporary Improvements

Interurban Electric Railway
Bridge Yard Shop
Oakland, CA

Contract Number: 04-0120F4

March 27th, 2013

HNTB

05/03/13 PERMIT SET

STAMP SHEET

The special provisions contained herein have been prepared by or under the direction of the following registered persons.

STRUCTURES

REGISTERED CIVIL ENGINEER

ARCHITECTURE

REGISTERED ARCHITECT

ENGINEER

REGISTERED ENGINEER

DOCUMENT 000110

TABLE OF CONTENTS

INTRODUCTORY INFORMATION
000101 Project Title Page
000110 Table of Contents

GENERAL REQUIREMENTS SUBGROUP
DIVISION 01 - GENERAL REQUIREMENTS

011420 Construction Site Management (Cal-Trans Spec)
013530 Health and Safety Plan (Cal-Trans Spec)
017420 Handling, Transportation, and Disposal of Contaminated Material (Cal-Trans Spec)

FACILITY CONSTRUCTION SUBGROUP
DIVISION 02 - EXISTING CONDITIONS

024119 Selective Demolition

DIVISION 03 - CONCRETE

033500 Concrete Sealers
033524 Polished Concrete
035400 Cast Underlayment

DIVISION 04 - MASONRY

NOT USED

DIVISION 05 - METALS

055000 Metal Fabrications
057300 Stainless Steel Railings

DIVISION 06 – WOOD, PLASTICS, AND COMPOSITES

061000 Rough Carpentry
062000 Finish Carpentry
064000 Architectural Woodwork
068213 Plastic Panels (Resin)

DIVISION 07 - THERMAL AND MOISTURE PROTECTION

072100 Thermal Insulation
074213 Metal Wall Panels
076000 Flashing and Sheet Metal
079200 Joint Sealants

05/03/13 PERMIT SET

DIVISION 08 - OPENINGS

081100 Metal Doors and Frames
083100 Access Doors and Panels
084126 All-Glass Entrance Doors
084413 Glazed Aluminum Curtain Walls
086310 Entry Canopy Glazing System
087100 Door Hardware
087500 Window Hardware
088000 Glazing
088300 Mirrors

DIVISION 09 - FINISHES

092900 Gypsum Board
093000 Tiling
096283 Structural Glass Flooring
096813 Tile Carpeting
098400 Acoustical Wall Panel
099000 Painting and Coating
099600 High-Performance Coatings

DIVISION 10 - SPECIALTIES

101400 Exterior Signage
101425 Code Signage
102113 Metal Toilet Compartments
102813 Toilet Accessories
104400 Fire Protection Specialties

DIVISION 11 - EQUIPMENT

113100 Appliances
115213 Projection Screens

DIVISION 12 - FURNISHINGS

122413 Roller Window Shades
123664 Quartz Countertops

DIVISION 13 - SPECIAL CONSTRUCTION

NOT USED

DIVISION 14 - CONVEYING EQUIPMENT

NOT USED

FACILITY SERVICES SUBGROUP
DIVISION 21 – FIRE SUPPRESSION

210501 Fire Protection General Provisions
210548 Vibration Isolation and Seismic Restraints for Fire Suppression
210550 Access Doors in General Construction for Fire Protection
210553 Systems Identification for Fire Protection

05/03/13 PERMIT SET

211319 Fire Protection Systems

DIVISION 22 – PLUMBING

220501 Plumbing General Provisions
220516 Expansion Compensation for Plumbing
220529 Hangers and Supports for Plumbing
220548 Vibration Isolation and Seismic Restraints for Plumbing
220550 Access Doors in General Construction for Plumbing
220553 Systems Identification for Plumbing
220719 Insulation for Plumbing
221100 Domestic Water Systems
221300 Drainage Systems
222101 Hydronic Systems Specialties for Plumbing
223300 Domestic Water Heating Systems
224000 Plumbing Fixtures
226313 Natural Gas Systems

DIVISION 23 – HEATING, VENTILATING, AND AIR CONDITIONING (HVAC)

230501 HVAC General Provisions
230513 Electric Motors for HVAC Equipment
230529 Hangers and Supports for HVAC
230548 Vibration and Seismic Controls for HVAC
230550 Access Doors in General Construction for HVAC
230553 Systems Identification for HVAC
230593 Testing, Adjusting and Balancing for HVAC
230700 Insulation for HVAC
232300 Refrigerant Piping
233100 HVAC Ducts and Casings
233313 Dampers
233400 HVAC Fans
233700 Air Outlets and Inlets
234000 HVAC Air-Cleaning Devices
235100 Breechings, Chimneys and Stacks
238129 Variable Refrigerant Volume System
238205 Space Terminal Heating Units

DIVISION 25 – INTEGRATED AUTOMATION

DIVISION 26 - ELECTRICAL

260501 Electrical General Provisions
260502 Equipment Connections and Coordination
260519 600V Wire and Cable
260526 Grounding System
260533 Raceways and Boxes
260926 Programmable Lighting Control System
262416 Panelboards
262726 Wiring Devices

05/03/13 PERMIT SET

262813 600V Fuses
262816 Disconnect Switches and Individual Motor Controllers
265000 Lighting Fixtures, Lamps, and Ballasts

DIVISION 27 - COMMUNICATIONS

270528 Telecommunications Raceways and Accessories

DIVISION 28 – ELECTRONIC SAFETY AND SECURITY

283000 Fire Management System

SITE AND INFRASTRUCTURE SUBGROUP
DIVISION 31 – EARTHWORK

NOT USED

DIVISION 32 – EXTERIOR IMPROVEMENTS

NOT USED

DIVISION 33 – UTILITIES

NOT USED

05/03/13 PERMIT SET

SECTION 011420

CONSTRUCTION SITE MANAGEMENT

PART 1 - WASTE MANAGEMENT

1.1 SOLID WASTE

A. Do not allow litter, trash, or debris to accumulate anywhere on the job site, including storm drain grates, trash racks, and ditch lines. Pick up and remove litter, trash, and debris from the job site at least once a week. The WPC manager must monitor solid waste storage and disposal procedures on the job site.

B. If practicable, recycle nonhazardous job site waste and excess material. If recycling is not practicable, dispose of it under Section 7-1.13, "Disposal of Materials Outside the Highway Right of Way," of the Standard Specifications.

C. Furnish enough closed-lid dumpsters of sufficient size to contain the solid waste generated by work activities. When refuse reaches the fill line, empty the dumpsters. Dumpsters must be watertight. Do not wash out dumpsters at the job site. Furnish additional containers and pick up dumpsters more frequently during the demolition phase of construction.

D. Solid waste includes:

1. Brick
2. Mortar
3. Timber
4. Metal scraps
5. Sawdust
6. Pipe
7. Electrical Cuttings
8. Nonhazardous equipment parts
9. Styrofoam and other packaging materials
10. Vegetative material and plant containers from highway planting
11. Litter and smoking material, including litter generated randomly by the public
12. Other trash and debris

E. Furnish and use trash receptacles in the job site yard, field trailers, and locations where workers gather for lunch and breaks.

1.2 HAZARDOUS WASTE AND CONTAMINATION

A. If hazardous waste is, or will be, generated on the job site, the WPC manager must be thoroughly familiar with proper hazardous waste handling and emergency procedures under 40 CFR § 262.34(d)(5)(iii) and must have successfully completed training under 22 CA Code of Regs § 66265.16.

B. The WPC manager must:

1. Oversee and enforce hazardous waste management practices
2. Inspect all hazardous waste storage areas daily, including all temporary containment facilities and satellite collection locations
3. Oversee all hazardous waste transportation activities on the job site

C. Submit a copy of uniform hazardous waste manifest forms to the Engineer within 24 hours of transporting hazardous waste.

D. Submit receiving landfill documentation of proper disposal to the Engineer within 5 business days of hazardous waste transport from the project.

05/03/13 PERMIT SET

1.3 UNANTICIPATED DISCOVERY OF ASBESTOS AND HAZARDOUS SUBSTANCES

A. Upon discovery of asbestos or hazardous substance, comply with Section 14-11.02 "Asbestos and Hazardous Substances," of the Standard Specifications.

1.4 HAZARDOUS WASTE MANAGEMENT PRACTICES

A. Handle, store, and dispose of hazardous waste under 22 CA Code of Regs Div 4.5.

B. Use the following storage procedures:

1. Store hazardous waste and potentially hazardous waste separately from nonhazardous waste at the job site.
2. For hazardous waste storage, use metal containers approved by the United States Department of Transportation for the transportation and temporary storage of hazardous waste.
3. Store hazardous waste in sealed, covered containers labeled with the contents and accumulation start date under 22 CA Code of Regs, Div 4.5. Labels must comply with the provisions of 22 CA Code of Regs, Div 4.5.§ 66262.31 and § 66262.32. Immediately replace damaged or illegible labels.
4. Handle hazardous waste containers such that no spillage occurs.
5. Store hazardous waste away from storm drains, watercourses, moving vehicles, and equipment.
6. Furnish containers with adequate storage volume at convenient satellite locations for hazardous waste collection. Immediately move these containers to secure temporary containment facilities when no longer needed at the collection location or when full.
7. Store hazardous waste and potentially hazardous waste in secure temporary containment enclosures having hours. Temporary containment enclosures must be located away from public access. Acceptable secure enclosures include a locked chain link fenced area or a lockable shipping container located within the project limits.
8. Design and construct secondary containment facilities with a capacity to contain precipitation from a 24- hour-long, 25-year storm; and 10 percent of the aggregate volume of all containers, or the entire volume of the largest container within the facility, whichever is greater.
9. Cover secondary containment facilities during non-working days and if a storm event is predicted. Secondary containment facilities must be adequately ventilated.
10. Keep secondary containment facility free of accumulated rainwater or spills. After a storm event, or in the event of spills or leaks, collect accumulated liquid and place into drums within 24 hours. Handle these liquids as hazardous waste unless testing determines them to be nonhazardous.
11. Do not store incompatible wastes, such as chlorine and ammonia, in the same secondary containment facility.
12. Provide sufficient separation between stored containers to allow for spill cleanup or emergency response access. Storage areas must be kept clean, well-organized, and equipped with cleanup supplies appropriate for the wastes being stored.
13. Repair or replace perimeter controls, containment structures, covers, and liners as necessary. Inspect storage areas before and after a storm event, and at least weekly during other times.

C. Do not:

1. Overfill hazardous waste containers
2. Spill hazardous waste or potentially hazardous waste
3. Mix hazardous wastes
4. Allow hazardous waste or potentially hazardous waste to accumulate on the ground

05/03/13 PERMIT SET

D. Dispose of hazardous waste within 90 days of the start of generation. Use a hazardous waste manifest and a transporter registered with the DTSC and in compliance with the CA Highway Patrol Biennial Inspection of Terminals Program to transport hazardous waste to an appropriately permitted hazardous waste management facility.

1.5 DUST CONTROL FOR HAZARDOUS WASTE OR CONTAMINATION

A. Excavation, transportation, and handling of material containing hazardous waste or contamination must result in no visible dust migration. Have a water truck or tank on the job site at all times while clearing and grubbing and performing earthwork operations in work areas containing hazardous waste or contamination.

1.6 STOCKPILING OF HAZARDOUS WASTE OR CONTAMINATION

A. Do not stockpile material containing hazardous waste or contamination unless ordered. Stockpiles of material containing hazardous waste or contamination must not be placed where affected by surface run-on or run-off. Cover stockpiles with 13 mils minimum thickness of plastic sheeting or 1 foot of nonhazardous material. Do not place stockpiles in environmentally sensitive areas. Stockpiled material must not enter storm drains, inlets, or waters of the State.

1.7 CONTRACTOR-GENERATED HAZARDOUS WASTE

A. You are the generator of hazardous waste generated as a result of materials you bring to the job site. Use hazardous waste management practices if you generate waste on the job site from the following substances:

1. Petroleum materials
2. Asphalt materials
3. Concrete curing compound
4. Pesticides
5. Acids
6. Paints
7. Stains
8. Solvents
9. Wood preservatives
10. Roofing tar
11. Road flares
12. Lime
13. Glues and adhesives
14. Materials classified as hazardous waste under 22 CA Code of Regs, Div 4.5

B. If hazardous waste constituent concentrations are unknown, use a laboratory certified by the ELAP under the California Department Of Public Health to analyze a minimum of 4 discrete representative samples of the waste to determine whether it is a hazardous waste and to determine safe and lawful methods for storage and disposal. Perform sampling and analysis in compliance with US EPA Test Methods for Evaluating Solid Waste, Physical/Chemical Methods (SW-846) and under 22 CA Code of Regs, Div 4.5.

C. Use your US EPA Generator Identification Number and sign hazardous waste manifests for the hazardous waste you generate.

D. Identify contaminated soil resulting from spills or leaks by noticing discoloration, or differences in soil properties. Immediately notify the Engineer of spills or leaks. Clean up spills and leaks under the Engineer's direction and to the satisfaction of the Engineer. Soil with evidence of contamination must be sampled and analysis performed by a laboratory certified by ELAP.

E. If sampling and analysis of contaminated soil demonstrates that it is a hazardous waste, handle and dispose of the soil as hazardous waste. You are the generator of hazardous waste created as the result of spills or leaks for which you are responsible.

05/03/13 PERMIT SET

F. Prevent the flow of water, including ground water, from mixing with contaminated soil by using one or a combination of the following measures:

1. Berms
2. Cofferdams
3. Grout curtains
4. Freeze walls
5. Concrete seal course

G. If water mixes with contaminated soil and becomes contaminated, sample and analyze the water using a laboratory certified by the ELAP. If analysis results demonstrate that the water is a hazardous waste, manage and dispose of the water as hazardous waste.

1.8 DEPARTMENT-GENERATED HAZARDOUS WASTE

A. If the Department is the generator of hazardous waste during the work performed on this project, use hazardous waste management practices

B. Labels must comply with the provisions of 22 CA Code of Regs § 66262.31 and § 66262.32. Mark labels with:
1. Date the hazardous waste is generated
2. The words "Hazardous Waste"
3. Composition and physical state of the hazardous waste (for example, asphalt grindings with thermoplastic or paint)
4. The word "Toxic"
5. Name, address, and telephone number of the Engineer
6. Contract number
7. Contractor or subcontractor name

C. Handle the containers such that no spillage occurs.

1.9 HAZARDOUS WASTE TRANSPORT AND DISPOSAL

A. Dispose of hazardous waste within California at a disposal site operating under a permit issued by the DTSC.

B. The Engineer will obtain the US EPA Generator Identification Number for hazardous waste disposal.

C. The Engineer will sign all hazardous waste manifests. Notify the Engineer 5 business days before the manifests are to be signed.

D. The Department will not consider you a generator of the hazardous waste and you will not be obligated for further cleanup, removal, or remedial action for such material if handled or disposed of under these specifications and the appropriate State and federal laws and regulations and county and municipal ordinances and regulations regarding hazardous waste.

1.10 PAINT WASTE

A. Clean water-based and oil-based paint from brushes or equipment within a contained area in a way that does not contaminate soil, receiving waters, or storm drain systems. Handle and dispose of the following as hazardous waste: paints, thinners, solvents, residues, and sludges that cannot be recycled or reused. When thoroughly dry, dispose of the following as solid waste: dry latex paint, paint cans, used brushes, rags, absorbent materials, and drop cloths.

1.11 CONCRETE WASTE

A. Use practices to prevent the discharge of asphalt concrete, PCC, and HMA waste into storm drain systems and receiving waters.

B. Collect and dispose of asphalt concrete, PCC, and HMA waste generated at locations where:

1. Concrete material, including grout, is used

2. Concrete dust and debris result from demolition
3. Sawcutting, coring, grinding, grooving, or hydro-concrete demolition creates a residue or slurry
4. Concrete trucks or other concrete-coated equipment is cleaned at the job site

1.12 SANITARY AND SEPTIC WASTE

A. Do not bury or discharge wastewater from a sanitary or septic system within the highway.

B. A sanitary facility discharging into a sanitary sewer system must be properly connected and free from leaks.

C. Place a portable sanitary facility at least 50 feet away from storm drains, receiving waters, and flow lines.

D. Comply with local health agency provisions if using an on-site disposal system.

1.13 LIQUID WASTE

A. Use practices that will prevent job-site liquid waste from entering storm drain systems and receiving waters.

B. Liquid waste include the following:

1. Drilling slurries or fluids
2. Grease-free and oil-free wastewater and rinse water
3. Dredgings, including liquid waste from cleaning drainage systems
4. Liquid waste running off a surface, including wash or rinse water
5. Other nonstormwater liquids not covered by separate permits

C. Hold liquid waste in structurally sound, leak-proof containers, such as roll-off bins or portable tanks.

D. Liquid waste containers must be of sufficient quantity and volume to prevent overflow, spills, and leaks.

E. Store containers at least 50 feet from moving vehicles and equipment.

F. Remove and dispose of deposited solids from sediment traps unless the Engineer approves another method.

G. Liquid waste may require testing to determine hazardous material content before disposal.

H. Dispose of drilling fluids and residue.

I. If a location approved by the Engineer is available within the job site, fluids and residue exempt under 23 CA Code of Regs § 2511(g) may be dried by evaporation in a leak-proof container. Dispose of the remaining as solid waste.

END OF SECTION

05/03/13 PERMIT SET

SECTION 013530

HEALTH AND SAFETY PLAN

PART 1 - GENERAL

1.1 SUMMARY

A. This work includes preparing, submitting, and implementing a detailed Health and Safety Plan that addresses the health and safety of all field personnel, including State personnel.

B. The plan must identify potential health and safety hazards associated with existing hazardous substances and specifies work practices that must be used to protect workers from those hazards in conformance with the Department of Toxic Substances Control and CAL-OSHA regulations. At a minimum, the Health and Safety Plan must:

1. Identify key site safety personnel
2. Describe risks associated with the work
3. Describe training requirements
4. Describe appropriate personal protective equipment
5. Describe any site-specific medical surveillance requirements
6. Describe any periodic air monitoring requirements
7. Define appropriate site work zones
8. Describe any decontamination requirements

C. The Health and Safety Plan must be submitted at least 15 business days before beginning work that may expose personnel to hazardous substances for review and acceptance by the Engineer. Before submittal, you must have the Health and Safety Plan approved by an industrial hygienist certified by the American Board of Industrial Hygiene.

1.2 SAFETY TRAINING

A. Before performing work that may expose personnel to hazardous substances, all personnel, including State personnel, must complete a safety training program that communicates the potential health and safety hazards associated with work on the site and instructs the personnel in procedures for doing the work safely.

B. The level of training provided must be consistent with the personnel's job function and conform to CAL-OSHA regulations.

C. Do not start safety training until the Health and Safety Plan is accepted by the Engineer.

D. Provide subsequent refresher training required until completion of the project.

E. Provide a certification of completion of the safety training program to all personnel who successfully complete the training.

F. Provide personal protective equipment required by State personnel to inspect the work.

G. The number of State personnel requiring the above mentioned safety training program and personal protective equipment is 5.

END OF SECTION

05/03/13 PERMIT SET

SECTION 017420

HANDLING, TRANSPORTATION, AND DISPOSAL OF CONTAMINATED MATERIAL

PART 1 - GENERAL

1.1 SUMMARY

A. This work includes temporary storage, confirmation testing, transportation, and disposal of contaminated material. Comply with Section 19, "Earthwork," of the Standard Specifications. Test results used to determine the nature and extent of contaminated material are provided as described in "Supplemental Project Information," of these special provisions.

1.2 DEFINITIONS

A. **Class II waste**: Contaminated material that is not regulated as a hazardous waste but requires handling as a designated waste under Water Code § 13173. Designated as roadway excavation (Class II). Does not include rock or pavement.

B. **Resource Conservation and Recovery Act (RCRA):** Federal law that provides guidelines for managing solid waste.

C. **Non-RCRA hazardous waste:** Contaminated material regulated as a hazardous waste under California law but not under RCRA. Also known as California hazardous waste. Designated as roadway excavation (Type H). Does not include rock or pavement.

1.3 SUBMITTALS

A. Work Plan: At least 20 days before starting clearing and grubbing or earthwork at the job site, submit a workplan that includes:

1. Schedule of activities
2. Method of excavation and equipment to be used
3. Dust control procedures
4. Storage methods and locations for contaminated material
5. Haul routes
6. Spill contingency plan

The Engineer reviews the work plan within 15 days. Resubmit required revisions within 5 days. Do not start clearing and grubbing or earthwork until the plan is approved by the Engineer. No adjustment for time or money is made if resubmittals of the work plan are required due to deficiencies in the plan.

B. **Waste Disposal Documents**: Submit a disposal facility waste disposal request for the Engineer's signature. Before transporting hazardous waste, submit a copy of the transporter's valid hazardous waste transporter registration. Submit completed waste shipment forms and disposal facility weight tickets within 35 days after shipment. The Department withholds payment until the completed forms are submitted.

C. **Sampling and Analysis Plan:** At least 20 days before starting material sampling, submit a sampling and analysis plan (SAP). The SAP must be signed by a California registered professional engineer or California registered professional geologist experienced in contaminated site characterization. The SAP must include:

1. Purpose and scope of the investigation, including:
    a. Additional disposal facility requirements
    b. Reclassification of material
    c. Characterization of material outside of the excavation pay limits
2. Sampling locations and methods
3. Analytical methods

4. Name, address, and Environmental Laboratory Accreditation Program certification number of the testing laboratory
5. Quality assurance/quality control procedures

D. Base the sampling and analysis procedures on guidelines in:

1. USEPA, SW 846, "Test Methods for Evaluating Solid Waste, Volume II: Field Manual Physical/Chemical
2. Methods"
3. ASTM, D 1452, "Soil Investigation and Sampling by Auger Borings"
4. ASTM, D 1586, "Penetration Test and Split-Barrel Sampling of Soils"
5. ASTM, D 1587, "Thin-Walled Tube Sampling of Soils for Geotechnical Purposes"
6. ASTM, D 6282-98(2005), "Standard Guide for Direct Push Soil Sampling for Environmental Site Characterizations"

The Engineer reviews the SAP within 15 days. Resubmit required revisions within 5 days. Do not start sampling until the plan is approved by the Engineer. No adjustment for time or money is made if resubmittals of the SAP are required due to deficiencies in the plan.

1.4 QUALITY CONTROL AND ASSURANCE

A. **Regulatory Requirements**: Laws and regulations that govern this work include:

1. Health and Safety Code, Div 20, Ch 6.5 (California Hazardous Waste Control Act)
2. 22 CA Code of Regs, Div 4.5 (Environmental Health Standards for the Management of Hazardous Waste)
3. 8 CA Code of Regs
4. Water Code § 13173

B. **Permits and Licenses**: Obtain all permits and licenses, pay all charges and fees, and give all notices necessary and incident to the due and lawful prosecution of the work, including registration for transporting vehicles carrying hazardous waste, under Section 7-1.04, "Permits and Licenses," of the Standard Specifications.

C. For hazardous waste disposal, the Engineer obtains the Environmental Protection Agency generator identification number and Board of Equalization identification number and signs all manifests as the generator.

D. Notify the Engineer at least 5 days before starting waste transport and at least 24 hours before subsequent loads when there is a break in hauling of more than 5 days.

PART 2 - CONSTRUCTION

A. Apply water to control dust at all times while performing clearing and grubbing or earthwork activities in work areas containing contaminated material. Apply water under Section 17, "Watering," of the Standard Specifications.

B. Excavation, transportation, storage, and handling of contaminated material must result in no visible dust migration off the job site.

C. Prevent mixing of contaminated material with uncontaminated material. No additional payment is made for material requiring reclassification because of failure to segregate the material after excavation.

D. Characterization and disposal of additional material from excavations performed outside of the pay limits are included in the contract price for excavation. Assume the material has the same handling, transportation and disposal requirements as adjacent material. Furnish replacement material suitable for the planned use under Section 19, "Earthwork," of the Standard Specifications.

E. Use material excavated to install individual (not duct bank) electrical and irrigation conduits to backfill the trenches.

2.1 TEMPORARY STORAGE

A. Transfer contaminated material directly from the excavation to any of the following:

1. Transport vehicles
2. Storage containers
3. Stockpile locations approved by the Engineer

B. Construct stockpile locations as follows:
1. The stockpiled material must not contain free liquids that separate readily.
2. Furnish and place undamaged chemically resistant geomembrane liners.
    a. Non-reinforced liner must be at least 20-mil thick.
    b. Scrim-reinforced liner must have a minimum weight of 40 lbs/1000 square feet.
3. Furnish and place undamaged geomembrane covers.
    a. Non-reinforced liner must be at least 10-mil thick.
    b. Scrim-reinforced liner must have a minimum weight of 26 lbs/1000 square feet.
4. The dimensions of the geomembrane must exceed the dimensions of the stockpile at all times.
5. Seal the seams in multiple geomembrane liners to prevent leakage.
6. Cover stockpiles at the end of each day or before storm events to prevent windblown dispersion and precipitation run-off and run-on.
7. If more than one sheet is required to cover the material, overlap the sheets a minimum of 1.5 feet.
8. Secure the cover to keep it in place. Do not use driven anchors except at the perimeter of the stockpile. Inspection and maintenance must comply with "Water Pollution Control" of these special provisions.

C. These stockpiling requirements apply to temporary storage outside of an excavation or a transport container including:

1. Staging of excavated material next to the excavation before pick up by loading equipment
2. Accumulating material for full transport loads
3. Awaiting test results required by a disposal facility

Start removing storage containers and stockpiles containing hazardous waste within 90 days of accumulating any quantity of material. After final removal has occurred, complete any cleanup required by the Engineer.

2.2 SAMPLING AND ANALYSIS

A. Test the material for any additional acceptance requirements requested by the disposal facility or for confirmation of classifications specified on the plans or in the special provisions. Use sampling and analysis procedures approved by the Engineer and the disposal facility. Prepare and submit a sampling and analysis plan before starting any tests.

B. The Engineer makes the final decision on reclassification or characterization of material after review of the test results. Allow 5 business days for review of test results. Changes in classification of materials will comply with Section 4-1.03, "Changes," of the Standard Specifications.

2.3 TRANSPORTATION

A. Prepare a non-hazardous waste manifest or other shipping form for each load of Class II waste. Prepare a uniform hazardous waste manifest for each load of hazardous waste using the appropriate waste code. Transport hazardous waste using a transporter registered with the Department of Toxic Substances Control.

B. Cover the cargo during transport to prevent spillage or dust release. You agree to indemnify the State from any cost or liability due to spillage during transport of contaminated material to a disposal facility.

2.4 DISPOSAL

A. Dispose of contaminated material as follows:

1. Roadway excavation (Class II) – Haul and dispose of the material at a permitted Class II waste management facility.
2. Roadway excavation (Type H) – Haul and dispose of the material at a permitted non-RCRA hazardous waste management facility.

B. Dispose of hazardous waste within California at a disposal site operating under a permit issued by the Department of Toxic Substances Control.

C. Obtain waste disposal approval from the appropriate disposal facility. Type H material is eligible for an exemption from the Board of Equalization disposal fees as provided under Health and Safety Code §§ 25174.1 and 25174.7. Request a letter of exemption from the Engineer at least 5 days before transporting Type H material from within these limits to a disposal facility.

END OF SECTION

SECTION 024119

SELECTIVE DEMOLITION

PART 1 - GENERAL

1.1 SUMMARY

A. Section Includes:
   1. Removal of designated building equipment, materials and fixtures.
   2. Removal of existing construction to accommodate new construction.
   3. Disconnecting and capping of identified utilities.

1.2 SUBMITTALS

A. General: Submit in accordance with Section 5-1.01, "Working Drawings," of Special Provisions.

B. Schedules: Submit schedule showing time and detailed sequence of demolition, removal of materials, arranged coordination for shut-off, capping, and continuation of utility services.

C. Closeout Submittals:
   1. Project Record Documents:
      a. Submit under provisions of Section 10-3.20, "Closeout Submittal" of Special Provisions.
      b. Record actual locations of capped utilities.

1.3 QUALITY ASSURANCE

A. Contractor or Sub-Contractor Qualifications: Contractor or Sub-Contractor specializing in demolition work with minimum of 3 years documented experience.

B. Regulatory Requirements:
   1. Comply with applicable codes, ordinances, rules, regulations, and laws of local, municipal, state and federal authorities having jurisdiction.
   2. Obtain and pay for necessary permits and notices; post where required.
   3. Comply with safety requirements of local fire department.

C. Notify affected utility companies before starting work and comply with their requirements.

D. Do not close or obstruct egress width of fire exits or access.

E. Do not disable or disrupt building fire or life safety systems without 72 hours prior written notice to Owner.

1.4 PRE-DEMOLITION CONFERENCE

A. Conduct pre-demolition conference to discuss following:
   1. Present draft of demolition schedule for review.
   2. Coordinate phasing requirements.
   3. Identify items to be protected and preserved before proceeding with work.
   4. Obtain agreement from Owner on day-to-day scheduling requirements and restrictions to avoid disruption of Owner operations resulting from demolition work, dirt, or noise.
   5. Discuss environmental requirements and procedures with Owner
      a. Identification of asbestos bearing materials, lead paint, and other hazardous materials.
      b. Waste Management Plan.
      c. Handling, transportation, and disposal of contaminated waste in accordance with Division 1 Section 017420.
      d. Health and safety plan in accordance with Division 1 Section013530.
      e. Environmental management plan (ref. Environmental Report - TBD).
      f. Environmental Regulatory Requirements
      g. Historical Preservation (ref. "Finding Of No Adverse Effect Report," dated November 2012).

1.5 PROJECT CONDITIONS

05/03/13 PERMIT SET

A. Occupancy:
   1. Owner will vacate demolition area prior to start of demolition work.
   2. Owner will continuously occupy areas of building immediately adjacent to selective demolition areas.
   3. Conduct selective demolition work in manner that will minimize need for disruption of Owner's normal operations.
   4. Provide minimum of 72 hours advanced notice to Owner of demolition activities which will severely impact Owner's normal operations.
   5. Maintain free and safe passage to and from Owner occupied areas.

B. Existing Conditions: Owner assumes no responsibility for actual condition of areas to be demolished.

C. Hazardous Materials:
   1. Owner has made provisions for a hazardous material report. Refer to "Limited Asbestos and Lead - Containing Paint Survey Report," dated December 2012. Inform Owner immediately upon discovery of asbestos products, radioactive materials, radon gas, toxic wastes, or other similar hazardous materials that will interfere with new work.
   2. Strictly follow procedures and regulations applicable to hazardous materials.
   3. Do not remove hazardous materials without Owner authorization.
   4. Give special consideration to handling of material that may contain asbestos. Direction relating to hazardous materials will be given by the Owner.
   5. Engineer will have no responsibility for detection, evaluation, or removal of asbestos materials, or for construction contract administration of removal process.
   6. Asbestos:
      a. Existing corrugated siding and roofing are asbestos bearing materials.
      b. Do not drill or cut into asbestos bearing materials without appropriate safety gear.
      c. Do not stage painting or other operations from corrugated roofing.
   7. Lead Paint:
      a. Building dates prior to 1976 and it is assumed lead-based paint has been used on interior and exterior surfaces.
      b. Do not abrade, sand, or scuff existing painted surfaces.
      c. Powerwash surfaces to prepare for repainting.
      d. Special attention is required for repair of rusted surfaces.

D. Explosives: Not permitted.

E. Traffic and Passageways:
   1. Maintain accessibility for fire fighting apparatus.
   2. Conduct demolition operations and debris removal to avoid interference with use of roads, streets, walks, and adjacent occupied facilities.
   3. Obtain written permission from authorities having jurisdiction prior to closing or obstructing streets, walks, or other adjacent occupied facilities.
   4. Provide alternate routes when closing or obstructing traffic ways when required by governing authorities.
   5. Ensure safe passage of persons around area of demolition. Provide and maintain temporary covered passageways; comply with requirements of governing authorities.

F. Protection:
   1. Perform Work in manner to eliminate hazards to persons or property and avoid interference with adjacent areas, utilities and structures.
   2. Provide and maintain temporary barricades, fences, warning signs, guardrails, warning lights, weatherproof and dust partitions, and other similar provisions as necessary or required by applicable regulatory authorities for protection of building occupants and workers.
   3. Provide and maintain fire extinguishers; comply with requirements of governing authorities.
   4. Maintain existing utilities which are to remain in service and protect from damage during demolition operations.
   5. Do not interrupt existing utilities serving occupied facilities, except when authorized by Owner in writing. Provide temporary services during interruptions to existing utilities.

05/03/13 PERMIT SET

6. Coordinate in advance with Owner mechanical, electrical, and plumbing shutdowns.
7. Protect existing work indicated to remain from damage.
8. Protect existing floors with suitable coverings when necessary.
9. Construct temporary dustproof partitions and seal return air plenums where necessary to areas where noisy or dirt and dust operations are being performed.
10. Provide temporary weather protection for areas where existing exterior elements were removed to ensure no water leakage or damage occurs to structure or interior areas of existing building.
11. Fire sprinkler system shall remain active.

PART 2 - PRODUCTS

NOT USED

PART 3 - EXECUTION

3.1 EXAMINATION

A. Verify demolition areas are unoccupied.

3.2 PREPARATION

A. Provide, erect, and maintain temporary barriers and security devices to prevent unauthorized use or entry of building.

B. Protect existing structures and materials which are not being demolished.

C. Provide temporary support for above ceiling utilities prior to demolition of ceiling grid.

D. Utilities:
   1. Mark and identify location of utilities to be disconnected.
   2. Notify affected utility company in advance of date and time when service needs to be disconnected.
   3. Disconnect and cap utility services; comply with requirements of governing authorities.
   4. Do not commence demolition operations until associated disconnections have been completed.

E. Materials Retained by Contractor:
   1. Items of salvageable value not indicated as Owner salvaged or scheduled for reinstallation may be removed as work progresses.
   2. Salvaged items must be removed from site as they are removed. Storage or sale of salvaged items on site will not be permitted.

3.3 DEMOLITION

A. General:
   1. Conduct demolition to minimize interference with adjacent occupied building areas.
   2. Cease demolition operations immediately if adjacent structures appear to be in danger. Conduct safety operations as necessary. Do not resume demolition operations until directed.
   3. Conduct operations to maintain egress and access at all times.
   4. Sprinkle debris with water to minimize dust. Provide hoses and water connections as necessary.
   5. Do not cause flooding or contaminated runoff.

B. Demolish existing construction as indicated in orderly and careful manner to accommodate new work. Protect supporting structural members. Remove demolished materials from site daily and legally dispose of such materials. Recycle removed materials to greatest extent possible.

C. Perform demolition in accordance with governing authorities.

D. Remove and immediately dispose of contaminated or vermin infested materials when encountered.

05/03/13 PERMIT SET

E. Report to Owner unanticipated mechanical, electrical, or structural elements which conflict with intended function or design when encountered. Submit report in writing. Rearrange demolition schedule as necessary to continue overall project progress without delay.

F. Do not burn or bury materials or debris on site. Leave structures and site in clean condition.

3.4 ADJUSTING

A. Repair demolition performed in excess of that required.

B. Return structures and surfaces to remain to conditions existing prior to commencement of selective demolition Work.

C. Remove existing anchor bolts flush to top of slab.

D. No patching of concrete is required.

3.5 CLEANING

A. General: Refer to Section 4.1.02, "Final Cleaning Up," Of Standard Specifications.

B. Broom clean demolition areas of dust, dirt, and debris caused by demolition operations. Return adjacent areas to condition existing prior to start of work.

C. Remove temporary work and protection when no longer needed.

END OF SECTION

05/03/13 PERMIT SET

SECTION 033500

CONCRETE SEALERS

PART 1 - GENERAL

1.1 SUMMARY

A. Section Includes: Concrete sealers for existing exposed concrete in electrical closets and similar spaces.

1.2 SUBMITTALS

A. Product Data: Submit product data, including chemical properties and percentage of solids, for each product.

1.3 QUALITY ASSURANCE

A. Applicator's Qualifications: Company specializing in performing work of this Section with 3 years minimum experience.

1.4 DELIVERY, STORAGE, AND HANDLING

A. Deliver, store, and handle products in accordance manufacturer's instructions.

B. Store products above 50 degrees F, but no greater than 85 degrees F, unless otherwise recommended by manufacturer.

1.5 ENVIRONMENTAL REQUIREMENTS

A. Do not apply materials when ambient or substrate surface temperatures are below 40 degrees F or higher than 100 degrees F.

1.6 SCHEDULING

A. Schedule application of products at proper time intervals after concrete finishing and curing operations.

B. Maintain proper moisture content of concrete before, during, and after application of specified products.

1.7 WARRANTY

A. Warrant applied sealer system to be free of defects related to material deficiency and workmanship for 5 years.

B. Warranty period begins at date of Substantial Completion.

PART 2 - PRODUCTS

2.1 MATERIALS

A. Provide materials, equipment, and personnel required to achieve specified finish.

B. Water Based Acrylic Sealing Compounds:
   1. ASTM C1315, Type I, Class A, VOC compliant, free of natural or petroleum waxes. Dries clear with satin sheen.
   2. Compatible with subsequent coatings and toppings.
   3. VOC Requirement: Less than 100 g/L
   4. Acceptable Products:
      a. Lumiseal WB Plus, L&M Construction Chemicals, Inc.
      b. VOCOMP-30, W. R. Meadows.
      c. MonoChem AquaSeal W20, Monopole.
      d. MonoChem PermaSeal, Monopole.
   5. Sealers: Only use sealers in the building that meet or do not exceed the VOC limits of Cal-GREEN Table 5.504.4.3 for VOC Content Limits for Architectural Coatings.

05/03/13 PERMIT SET

PART 3 - EXECUTION

3.1 EXAMINATION

A. Examine conditions and proceed with work when substrates are ready.

B. Verify that damage and defects in concrete surface have been repaired.

C. Verify that surfaces are clean, dry, dust free, and free of efflorescence, oil or other matter detrimental to sealer application.

3.2 PREPARATION

A. Provide protection as necessary to protect adjacent materials and surfaces from dirt, dust, and other surface or physical damage.

B. Remove loose particles, existing sealers, existing adhesives, foreign matter, and oil by method which will not affect sealer application.

C. Prepare surfaces in accordance with manufacturer's directions.

3.3 APPLICATION

A. General:
   1. Provide finishes to match approved samples at locations indicated.
   2. Apply materials in accordance with manufacturer's printed instructions.

B. Liquid Membrane-Forming Sealer:
   1. Apply sealer using low pressure airless sprayer in single coat at 400 to 600 ft/gal coverage unless greater amount is recommended by manufacturer to obtain penetration and full coverage.
   2. Do not allow flooding or puddling of material on surface.
   3. Do not dilute or alter material as packaged.
   4. Sealer Locations: Exposed concrete of janitor’s closets, electrical and telephone rooms, storage rooms, service elevator lobbies, and other scheduled areas.

3.4 ADJUSTING

A. Repair or replace adjacent Work which has been damaged by finishing operations.

3.5 CLEANING

A. Clean-up and remove debris daily.

B. Clean spillage, overspray, or drift from adjacent surfaces; remove immediately in accordance with manufacturer's instructions.

3.6 PROTECTION

A. Protect finished work.

B. Protect finished concrete surfaces from damage by construction equipment, operations and from adverse weather conditions.

END OF SECTION

05/03/13 PERMIT SET

SECTION 033524

POLISHED CONCRETE

PART 1 - GENERAL

1.1 SUMMARY

A. Section Includes: Polished concrete finishing for interior concrete floors.

1.2 SYSTEM DESCRIPTION

A. Provide uniformly polished and sealed (with densifier material) concrete floor finish.

1.3 SUBMITTALS

A. Product Data: Submit product data, including chemical properties and percentage of solids, for each product.

B. Shop Drawings: Show locations of concrete topping slab control joints.

C. Samples:
1. Submit 12 inch by 18 inch by 2 inch thick samples showing polished concrete finish.
2. Samples shall illustrate range of color and texture expected in final Work.
3. Resubmit samples until approved.

D. Submit following Informational Submittals:
1. Certifications specified in Quality Assurance article.
2. Qualification Data: Applicator's qualification data.
3. Field Quality Control – Static Coefficient of Friction Test Reports: Reports of testing specified in PART 3 “Field Quality Control” Article.
4. Manufacturer's Instructions: Application and finishing instructions, including surface preparation, etches, stains, and sealer application rates for each type of substrate, methods, and techniques.
5. Maintenance Data: For inclusion in maintenance manual required by Section 017800.
   a. Include manufacturer’s instructions for maintenance of installed work, including methods and frequency recommended for maintaining optimum condition under anticipated use.
   b. Include precautions against cleaning products and methods which may be detrimental to National Floor Safety Institute (NFSI) finishes and performance.

1.4 QUALITY ASSURANCE

A. Applicator's Qualifications:
1. Experience: Company experienced in performing specified work similar in design, products, and extent to scope of this Project; with a record of successful in-service performance; and with sufficient production capability, facilities, and personnel to produce specified work.
2. Supervision: Maintain competent supervisor who is at Project during times specified work is in progress, and is currently certified as Craftsman or Master Craftsman by Concrete Polishing Association of America (CPAA).
3. Manufacturer Qualification: Approved by manufacturer to apply liquid applied products.

B. Certifications:
1. Submit manufacturer's certificate stating proper amount of materials was ordered and shipped to Project.
2. Submit polished concrete manufacturer's certificate indicating review of Project conditions and intent to issue extended warranty. Submittal of certificate is required prior to application of materials.

C. Walkway Auditor: Certified by NFSI to test polished floors for static coefficient of friction according to NFSI 101-A.

D. Static Coefficient of Friction: Achieve not less than 0.5 for level floor surfaces as determined by quality control testing according to NFSI 101-A.

05/03/13 PERMIT SET

1.5 FIELD SAMPLES

A. General: Comply with provisions of Section 014500.

B. Coordinate location of field sample with Engineer prior to starting work.

C. Finish one 100 sq. ft. sample panel of polished concrete finish for Engineer's review of texture, sheen, and workmanship. Provide workmanship and procedures necessary to match Engineer's samples.

D. Maintain accepted sample application during construction as standard for Work.

E. Engineer's Review:
   1. Engineer will review field sample for visual acceptance of materials and workmanship.
   2. Refinish unsatisfactory Work as directed by Engineer.

F. Approved samples may remain as part of the Work.

1.6 PRE-INSTALLATION CONFERENCE

A. Conduct pre-installation conference.

B. Arrange for manufacturer's technical representative to be on Project site to advise applicator of proper procedures and precautions and to observe application methods of products.

1.7 DELIVERY, STORAGE, AND HANDLING

A. Deliver, store, and handle products in accordance manufacturer’s instructions.

B. Store products above 50 degrees F, but no greater than 85 degrees F, unless otherwise recommended by manufacturer.

1.8 PROJECT CONDITIONS

A. Environmental Requirements:
   1. Comply with local air pollution and safety regulations of governing authorities while performing concrete polishing operations.
   2. Do not apply materials when ambient or substrate surface temperatures are below 40 degrees F or higher than 100 degrees F.
   3. Provide mechanical ventilation during and after application to dissipate fumes if natural ventilation is insufficient.

B. Protection:
   1. Protect concrete slabs from staining prior to floor finishing operations.
   2. Provide suitable floor coverings when operating hydraulic equipment.
   3. Do not allow pipe cutting or threading machines on slabs scheduled for polished concrete finish.

1.9 SCHEDULING

A. Schedule application of products at proper time intervals after concrete finishing and curing operations.

B. Maintain proper moisture content of concrete before, during, and after application of specified products.

1.10 WARRANTY

A. Warrant polished concrete system to be free of defects related to material deficiency and workmanship for 5 years.

B. Warranty period begins at date of Substantial Completion.

PART 2 - PRODUCTS

2.1 MATERIALS

A. Provide materials, equipment, and personnel required to achieve specified finish.

05/03/13 PERMIT SET

B. Polished Concrete Chemical Sealer/Hardener/Densifier Compounds:
   1. High performance chemical densifier manufactured specifically for application with polished concrete.
   2. Acceptable System:
      a. Formula One Polished Concrete System, L.M. Scofield, Los Angeles, CA.
      b. FGS/Permashine, L&M Construction Chemicals, Inc., Omaha, NE.
      c. Certi-Shine, Vexcon Chemicals, Inc., Philadelphia, PA
      d. Perfect Polish.

C. Liquid Densifier: Odorless, non-hazardous, Low VOC silicate that penetrates concrete to react with free lime and calcium hydroxide to produce permanent chemical reaction that hardens and densifies concrete surface.
   1. Sealers: Only use sealers and densifiers in the building that meet or do not exceed the VOC limits of Cal-GREEN Table 5.504.4.3 for VOC Content Limits for Architectural Coatings.

D. Polish Guard (Sealer): Non-film forming, stain resistant, food resistant, chemical stain resistant, impregnating sealer designed to be used on concrete surfaces previously densified.

2.2 ACCESSORIES

A. Patching Compound: Compound composed of 40 percent portland cement, 45 percent limestone, and 15 percent vinyl acetate copolymer, when mixed with dust salvaged from grinding process forms a paste that hardens when surface imperfections are filled.

B. Grout Material: Clear modified silicate sealant, containing no pore clogging latex, when mixed with dust salvaged from grinding process forms a paste that reacts with calcium hydroxide in concrete that hardens when surface imperfections are filled.

C. Protective Cover: Non-woven, puncture and tear resistant, polypropylene fibers laminated with a multi-ply, textured membrane, not less than 18 mils in thickness.

2.3 POLISHING EQUIPMENT

A. Field Grinding and Polishing Equipment:
   1. Variable speed, multiple head, counter-rotating, walk-behind machine with not less than 600 pounds of down pressure on grinding or diamond polishing pads.
   2. If dry grinding, honing, or polishing, use dust extraction equipment with flow rate suitable for dust generated, with squeegee attachments.

B. Edge Grinding and Polishing Equipment: Hand-held or walk-behind machines which produces same results, without noticeable differences, as field grinding and polishing equipment.

C. Burnishing Equipment: High speed walk-behind or ride-on machines capable of generating 1000 to 2000 revolutions per minute and with sufficient head pressure of not less than 20 pounds to raise floor temperature by 20 degrees F.

D. Metal Bonded Pads: Grinding pads with embedded industrial grade diamonds of varying grits fabricated for mounting on equipment.

E. Resin Bonded Pads: Polishing pads with embedded industrial grade diamonds of varying grits fabricated for mounting on equipment.

F. Burnishing Pads: Maintenance pads for use with high speed burnishing equipment.

PART 3 - EXECUTION

3.1 EXAMINATION

A. Examine conditions and proceed with work when substrates are ready.

B. Verify that surfaces are clean, dry, dust free, and free of efflorescence, oil or other matter detrimental to sealer/hardener application.

C. Verify that joint sealant work in adjoining surfaces is complete prior to applications of sealers. Delay application until sealants have cured.

05/03/13 PERMIT SET

3.2 PREPARATION

A. Provide protection as necessary to protect adjacent materials and surfaces from dirt, dust, and other surface or physical damage.

B. Remove loose particles, foreign matter, and oil by method which will not affect sealer/hardener application.

C. Prepare surfaces in accordance with manufacturer's directions.

D. Provide protection as necessary to protect adjacent materials and surfaces from dirt, dust, spillage, overspray and other surface or physical damage.

E. Once polished concrete flooring operations begin, do not allow construction traffic in work area until floor is completely finished and covered with protective materials to prevent damage and staining.

3.3 POLISHING CONCRETE FLOORS

A. General: Follow manufacturer's instructions and use same procedures and personnel used in creating approved field sample. Approved sample will be used to judge acceptability of polished concrete finishing.

B. Initial Grinding:
   1. Use grinding equipment with metal bonded grinding pads.
   2. Begin grinding in one direction using sufficient size grit pad.
   3. Make sequential passes with each pass perpendicular to previous pass using finer grit pad with each pass, up to 150 grit.
   4. Achieve maximum refinement with each pass before proceeding to finer grit pads.
   5. Vacuum floor using squeegee vacuum attachment after each pass.
   6. Continue grinding until aggregate exposure matches approved field mock-ups.

C. Treating Surface Imperfections:
   1. Mix patching compound and grout material with dust created by grinding operations to match color of adjacent concrete surface.
   2. Fill surface imperfections including, but not limited to, holes, surface damage, small and micro cracks, air holes, pop-outs, and voids.
   3. Work compound and treatment until color differences between concrete surface and filled surface imperfections are not reasonably noticeable when viewed from 10 feet away under lighting conditions that will be present after construction.

D. Liquid Densifier Application: Apply undiluted to point of rejection, remove excess liquid, and allow to cure according to manufacturer's instructions.

E. Grout Grinding:
   1. Use grinding equipment and appropriate grit grinding pads.
   2. While applying fresh grout material prior to, grind concrete in direction perpendicular to initial grinding to remove scratches.
   3. Vacuum floor using squeegee vacuum attachment after each pass.

F. Honing:
   1. Use grinding equipment with resin bonded grinding pads.
   2. Grind concrete in one direction starting with 50 grit pad and make as many sequential passes required to remove scratches, each pass perpendicular to previous pass, up to 400 grit pad reaching maximum refinement with each pass before proceeding to finer grit pads.
   3. Auto scrub or vacuum floor using squeegee vacuum attachment after each pass.

G. Polishing:
   1. Use polishing equipment with resin bonded polishing and burnishing pads.
   2. Begin polishing in one direction starting with 800 grit pad.
   3. Make sequential passes with each pass perpendicular to previous pass using finer grit pad with each pass, up to 3000 grit.
   4. Achieve maximum refinement with each pass before proceeding to finer grit pads.
   5. Auto scrub or vacuum floor using squeegee vacuum attachment after each pass.
   6. Continue polishing until gloss appearance, as measured according to ASTM E430, matches approved field sample.

05/03/13 PERMIT SET

H. Polish Guard: Uniformly apply and remove excessive liquid according to manufacturer's instructions.

I. Final Polish: Using burnishing equipment and finest grit burnishing pads, burnish to uniform sheen matching approved field sample.

J. Final Polished Concrete Floor Finish:
   1. Class C – Medium Aggregate Finish: Remove not more than 1/8 inch of concrete surface by grinding and polishing resulting in majority of exposure displaying medium aggregate with no, or small amount of, large aggregate at random locations.
   2. Level 2 – Medium Gloss Appearance:
      a. Procedure: Not less than 5 step process with full refinement of each diamond pad up to 800 grit resin bonded pad with one application of densifier.
      b. Gloss Reading: Not less than 55 according to ASTM E430 before polish guard application.

3.4 FIELD QUALITY CONTROL

A. Field Testing: Engage a qualified walkway auditor to perform field testing according to NFSI 101-A to determine if polished concrete floor finish complies with specified static coefficient of friction.

3.5 ADJUSTING

A. Repair or replace adjacent Work which has been damaged by finishing operations.

3.6 CLEANING

A. Clean-up and remove debris daily.

B. Clean spillage, overspray, or drift from adjacent surfaces; remove immediately in accordance with manufacturer's instructions.

3.7 CLOSEOUT ACTIVITIES

A. Maintenance Training: CPAA Master Craftsman shall train Owner's designated personnel in proper procedures for maintaining polished concrete floor.

3.8 PROTECTION

A. Protect finished work.

B. Once polished concrete flooring operations begin, do not allow construction traffic in work area until floor is completely finished and covered with protective materials to prevent damage and staining.

C. Protect finished concrete surfaces from damage by construction equipment and operations.

D. Covering: After completion of polishing, protect polished floors from subsequent construction activities with protective covering.

END OF SECTION

05/03/13 PERMIT SET

SECTION 035400

CAST UNDERLAYMENT

PART 1 - GENERAL

1.1 SUMMARY

A. Section Includes:
   1. Leveling of concrete floors for application of large format porcelain tile.
   2. Cast fill and patching for sloped concrete areas.

1.2 SUBMITTALS

A. Product Data:
   1. Submit product data for underlayment.
   2. Indicate trade name of system proposed, generic name and type, performance characteristics, and chemical resistance.

B. Submit following Informational Submittals:
   1. Test Reports: Submit written results of testing specified as part of Field Quality Control article.
   2. Certifications specified in Quality Assurance article.
   3. Qualification Data: Manufacturer's and applicator's qualification data.
   4. Manufacturer's instructions.
   5. Manufacturer's field reports.

1.3 QUALITY ASSURANCE

A. Manufacturer Qualifications: Company specializing in manufacturing Products specified in this Section with minimum 5 years documented experience.

B. Applicator Qualifications: Acceptable to manufacturer with experience on at least 5 projects of similar nature in past 5 years.

C. Certifications: Submit manufacturer's certification that products furnished for Project meet or exceed specified requirements.

1.4 PRE-INSTALLATION CONFERENCE

A. Conduct pre-installation conference.

B. Verify existing conditions, preparation requirements, and finishing requirements.

1.5 DELIVERY, STORAGE, AND HANDLING

A. Deliver, store, and handle products in accordance manufacturer’s instructions.

1.6 PROJECT CONDITIONS

A. Do not install underlayment until floor penetrations and peripheral work is complete.

B. Environmental Requirements:
   1. Underlayment is for interior use only.
   2. Enclose building interior before, during and after installation.
   3. Comply with more restrictive of following or manufacturer's written requirements under which products can be installed.
   4. Maintain minimum ambient temperature of 50 degrees F for 24 hours prior, during, and 72 hours after installation of underlayment.
   5. Ventilate spaces to remove excess moisture during curing process. 5-7 days are usually adequate drying time. Test for dryness in accordance with manufacturer's recommendations.

05/03/13 PERMIT SET

1.7 WARRANTY

A. Provide written warranty, in a form acceptable by Owner, from material manufacturer and countersigned by applicator, stating that system installed will perform satisfactorily for period of 5 years from date of Substantial Completion.

B. Warranty with disclaimer disallowing implied warranties of merchantability and/or fitness for a particular purpose or other disclaimers that reduce Owner protection is not acceptable.

PART 2 - PRODUCTS

2.1 MANUFACTURERS AND PRODUCTS

A. Acceptable Interior Self-Leveling Cement Based Products and Manufacturers:
   1. Ardex K-15, Ardex, Inc.
   2. Ultraplan 1 Plus, Mapei.
   3. 86 Self-Leveling, Laticrete.
   4. Super Flo Top, Euclid Chemical Company.

B. Acceptable Trowelable Cement Based Products and Manufacturers:
   1. Ardex SD-P, Ardex, Inc.
   2. Mapecem Quickpatch, Mapei.
   3. Duracrete, L&M Construction Chemicals, Inc.
   4. Sonneborn Sonopatch 100, DeGussa Construction Chemicals.

2.2 MATERIALS

A. Underlayment:
   1. Self-leveling Type:
      a. Non-shrinking, cement based mix, containing no gypsum, for use over concrete substrates.
      b. Locations: Substrates for large format porcelain tiles.
   2. Trowel Type:
      a. Non-shrinking, trowelable grade cement based mix, containing no gypsum, for use over concrete substrates.
      b. Locations: Existing concrete ramps
   3. Thickness:
      a. Self-leveling: Featheredge up to 1 inch.
      b. Trowel Grade: 1/2 inch to 5 inch with addition of manufacturer approved aggregate.
   4. Subfloor Adhesive VOC: Less than 50 g/L,.
   5. Compressive Strength: 3000 psi minimum at 28 days.

B. Subfloor Adhesives shall meet or exceed the VOC and chemical component limits of SCAQMD Rule 1168 and Cal-GREEN Table 5.504.4.1 Adhesive VOC Limit requirements.

C. Bonding Agent/Crack Fillers: Type recommended by underlayment manufacturer for use over substrate encountered.

D. Aggregate Sand: Comply with underlayment manufacturer requirements.

E. Water: Potable; free from impurities.

2.3 MIXES

A. Site mix materials in accordance with manufacturer's instructions.

B. Mix to achieve proper consistency as recommended by manufacturer's instructions.

PART 3 - EXECUTION

3.1 EXAMINATION

A. Examine conditions and proceed with work when substrates are ready.

B. Verify substrate surfaces are clean, dry, free from efflorescence, wax, curing compounds, and do not contain petroleum by-products or other compounds detrimental to underlayment material bond to substrate.

05/03/13 PERMIT SET

3.2 PREPARATION

A. Remove substrate irregularities. Fill voids and joints with filler. Finish smooth.

B. Seal penetrations through substrate.

C. Vacuum clean surfaces.

D. Prime substrate in accordance with manufacturer's instructions. Allow to dry.

3.3 INSTALLATION

A. Install underlayment in accordance with manufacturer’s instructions.

B. Place to thickness indicated.

C. Maintain top surface of self-leveling material level to within 1/8 inch in 10 feet. Follow dimensions for slped surfaces as indicated on Drawings.

D. Air cure in accordance with manufacturer's instructions.

3.4 FIELD QUALITY CONTROL

A. Tests: Field tests will be performed for compressive strength verification using 2 inch cube molds.

B. Manufacturer's Field Services:

1. Notify manufacturer prior to start of Work and make arrangements for manufacturer's technical representative to be present during first day's work to verify work is being conducted in accordance with their recommendations.
2. Submit summary report.

3.5 PROTECTION

A. Protect finished work.

B. Do not permit traffic over unprotected floor. Place temporary wood planking or plywood over underlayment wherever it will be subjected to traffic or concentrated loads.

END OF SECTION

05/03/13 PERMIT SET

SECTION 055000

METAL FABRICATIONS

PART 1 - GENERAL

1.1 SUMMARY

A. Section Includes:
   1. Rough hardware.
   2. Miscellaneous Metals

1.2 SUBMITTALS

A. Product Data: Submit product data for manufactured components indicating type, finish, size, accessories, and anchorage details.

B. Shop Drawings:
   1. Indicate profiles, dimensions, fabrication and installation details, size and type of fasteners, welds, accessory items, shop finish and method of anchorage.
   2. Stamp shop drawings with seal and signature of professional engineer responsible for design.

C. Submit following Informational Submittals: Certifications specified in Quality Assurance article.

1.3 QUALITY ASSURANCE

A. Certifications: Fabricator's statement indicating fabrications are designed, fabricated, and installed to comply with code and Contract Document loading.

1.4 DELIVERY, STORAGE AND HANDLING

A. Deliver, store, and handle products in accordance manufacturer’s instructions.

PART 2 - PRODUCTS

2.1 FERROUS METALS, GENERAL

A. Steel Plates, Shapes and Bars: ASTM A36.
   1. Steel: Maximize use of recycled steel with minimum of 30 percent.

B. Steel Tubing: Cold-formed, ASTM A500.

C. Structural Steel Sheet: Hot-rolled, ASTM A1011/A1011M, Class 1; of grade required for design loading.

D. Galvanized Structural Steel Sheet: ASTM A653, of grade required for design loading. Coating designation; G90.

E. Steel Pipe: ASTM A53; type and grade (if applicable) as selected by fabricator and as required for design loading; black finish unless otherwise indicated.

2.2 SURFACE PREPARATION AND APPLICATION

A. Steel surfaces to be primed must be dry and free of dirt, oils, rust, salt and other contaminants.

B. Blast-clean steel to "commercial grade" SSPC SP-6 for general use.

C. Apply primers in accordance with manufacturer's instructions.

2.3 UNIVERSAL PRIMER

A. Locations: Interior steel in conditioned space.

B. Manufacturer's standard, lead free primer, capable of providing sound foundation for field applied top coats despite prolonged exposure.

C. Standard: FS TT-P-645.

D. Maximum Allowable Dry Time: 4 hours to touch; 24 hours to re-coat.

E. Compatible with finish paint system specified in 099000.

05/03/13 PERMIT SET

F. Acceptable Products:
   1. Series 115 Uni-Bond, Tnemec Company, Inc., Kansas City, MO.
   2. Carboguard 890 VOC, Carboline Company, St. Louis, MO.

2.4 ZINC-RICH PRIMER

A. Locations: Exterior or areas subject to unconditioned, high humidity.

B. Inorganic, zinc-rich, capable of providing sound foundation for field applied top coats despite prolonged exposure, cathodic protection and corrosion resistance. Similar to galvanizing.
   1. Pigment Content: Minimum 63% zinc in dry film by weight.
   2. Compatible with finish paint system specified in 099000.
   3. Acceptable Products:
      a. Tnemec H90-97 Tneme-Zinc, Tnemec Co., Kansas City, MO.
      b. Carbo-Zinc 859 VOC, Carboline Company, St. Louis, MO.
      c. ZRC Cold Galvanizing Compound, ZRC Products Company, Quincy, MA.

2.5 FABRICATION, GENERAL

A. Field verify dimensions prior to shop fabrication.

B. Minimize joints and seams by using largest stock sizes practical.

C. Locate multiple joints at regular intervals and at least conspicuous locations.

D. Form flush, tight, hairline joints and seams. Continuously weld joints and seams to develop the full strength of the jointed members.

E. Miter exposed joints. Grind exposed welds, seams and joints to form a smooth, uniform surface.

F. Weld in accord with AWS D1.1 for materials being welded.

G. Ease exposed edges to a minimum, uniform radius of 1/32 inch.

H. Fit and shop assemble sections in largest sizes practical for site delivery.

I. Fabricate work to exclude rain and condensate or provide weep holes to divert water to the exterior.

J. Form break metal corners to the smallest radius possible without distressing the finish surface.

K. Cut, drill, punch, tap, reinforce and provide anchors to accommodate adjoining work and hardware.

L. Provide anchors, bolts, rough hardware, fasteners and accessories required to incorporate and secure fabrications and to make the units functionally operational.

M. Use countersunk, flat head screws and bolts at exposed joints requiring mechanical fasteners.

N. At exposed work, use materials which are smooth, free of surface blemishes, pitting, seam marks, roller marks, trade names and roughness.

2.6 ROUGH HARDWARE

A. Furnish bent or custom fabricated bolts, plates, anchors, hangers, dowels and miscellaneous steel and iron shapes required for framing, supporting, anchoring or securing fixtures, accessories, and furnishings.

B. Straight bolts and other stock rough hardware items are specified in Division 6 sections.

C. Fabricate items to sizes, shapes and dimensions required.

D. Furnish steel washers, except use malleable-iron washers for heads and nuts which bear on wood structural connections.

E. Finish: Same as item being supported or anchored.

2.7 ANGLE FRAMES AND EDGE ANGLES

A. Vanities and Countertops: Provide framing to support countertops.

B. Complete with anchors and bolts. For casting in concrete, space anchors 24 inches OC with 1-1/4 inches by 1/4 inch by 8 inches steel straps.

C. Finish: Universal primer for interior.

05/03/13 PERMIT SET

PART 3 - EXECUTION

3.1 EXAMINATION

A. Examine conditions and proceed with work when substrates are ready.

B. Coordinate and furnish setting drawings, diagrams, templates, instructions, and directions for installation of anchorages, concrete inserts, sleeves, anchor bolts and miscellaneous items having integral anchors which are embedded in concrete or masonry construction.

3.2 INSTALLATION, GENERAL

A. Perform cutting, drilling and fitting required for installation of fabrications.

B. Set work accurately to established lines and levels.

C. Provide temporary bracing and anchors for items which are to be built into concrete, masonry or similar construction.

D. Fit exposed connections together to form tight hairline joints. Weld connections which are left as exposed joints.

E. Grind exposed joints smooth and touch-up shop paint.

F. Do not weld, cut or abrade galvanized surfaces of bolted or screwed connections.

G. Field Welding; comply with AWS Code D1.1.

H. Clean concrete and masonry bearing surfaces of any bond-reducing materials; roughen to improve bond to surfaces. Clean bottom surface of bearing plates.

I. Set loose leveling and bearing plates on wedges, or adjustable devices. After the bearing members have been positioned and plumbed, tighten the anchor bolts. Do not remove wedges or shims, but if protruding, cut flush with edge of bearing plate before packing with grout.

3.3 ADJUST AND CLEAN

A. Touch-Up Painting: Immediately after erection, clean field welds, bolted connections, and abraded areas and paint with same material used for shop painting. Apply by brush or spray to provide a minimum dry film thickness of 2.0 mils.

END OF SECTION

05/03/13 PERMIT SET

SECTION 057300

STAINLESS STEEL RAILINGS

PART 1 - GENERAL

1.1 SUMMARY

A. Section Includes: Stainless steel barrier railings at existing steel X-bracing to prevent head impact on existing steel.

1.2 SYSTEM REQUIREMENTS

A. Design Requirements:
   1. Fabricator is responsible for designing units, including anchorage to concrete slab and necessary modifications to meet specified requirements and maintain visual design concepts.
   2. Drawings are diagrammatic and are intended to establish basic dimension of units, sight lines, and profiles of units.
   3. Provide concealed fastening wherever possible.

B. Structural Requirements: Provide assemblies which, when installed, comply with the following minimum requirements for structural performance:
   1. Guards: Capable of withstanding following loads applied as indicated.
      a. Concentrated load of 200 pounds applied at any point along the top, in any direction, and have attachment devices and supporting structure to transfer this loading to appropriate structural elements of the building.
      b. Uniform load of 50 PLF applied in any direction at the top and to transfer this load through the supports to the structure.
      c. Concentrated and uniform loads above need not be applied simultaneously.

1.3 SUBMITTALS

A. Shop Drawings: Indicate locations and complete fabrication details, materials, finishes, and installation details.

B. Submit following Informational Submittals: Manufacturer's instructions.

1.4 QUALITY ASSURANCE

A. Fabricator Qualifications: Company specializing in fabricating work specified in this Section with minimum 5 years documented experience.

B. Welder Qualifications: AWS certified within past 12 months for each type of weld required.

1.5 DELIVERY, STORAGE AND HANDLING

A. Deliver, store, and handle products in accordance manufacturer’s instructions.

PART 2 - PRODUCTS

2.1 MATERIALS

A. Stainless Steel:
   1. Pipe: ASTM A312, Grade TP 316.
   2. Tubing: ASTM A554, Grade MT 304.
   3. Castings: ASTM A743, Grade CF-8 or CF-20.
   4. Shapes: ASTM A276, UNS Number S31600.

2.2 GROUT

A. Non-Shrink Grout:
   1. Pre-mixed compound consisting of non-metallic aggregate, cement, water reducing and plasticizing additives.
   2. Minimum strength at 28 days: 5000 psi.

05/03/13 PERMIT SET

3. Comply with ASTM C1107.
4. Acceptable Products:
   a. Crystex, L&M Construction Chemicals, Omaha, NE.
   b. Masterflow 713, Master Builders, Cleveland, OH.
   c. Euco Rock Anchor Bolt Grout, Euclid Chemical Co., Cleveland, OH.
   d. SikaGrout 212, Sika Corporation, Lyndhurst, NJ.
   e. Five Star Grout, Five Star Products, Fairfield, CT.

B. Fasteners: As recommended by manufacturer for conditions encountered.

2.3 FABRICATION

A. General:
1. Verify dimensions on site prior to fabrication.
2. Fabricate to support design loads specified.
3. Fit and shop assemble in largest practical sizes.
4. Fabricate materials straight and true, without scratches, scars, creases, buckles, ripples, or chatter marks, free from surface blemishes.

B. Connections:
1. Stainless Steel Custom Design: Fabricate for connection of members by welding; comply with AWS for recommended practices; grind exposed welds smooth and flush.

C. Brackets, Flanges, Fittings, and Anchors:
1. Provide brackets, flanges, miscellaneous fittings and anchors for interconnection of railing members as indicated on Drawings.

D. Joints: Mill to tight, hairline fit.

E. Ends: Capped.

F. Bends: Form by prefabricated elbow fittings and radius bends, except where configuration requires bending of railing members.

2.4 FINISHES

A. Stainless Steel: No. 4 brushed finish.

PART 3 - EXECUTION

3.1 EXAMINATION

A. Examine conditions and proceed with work when substrates are ready.

3.2 INSTALLATION

A. Install in accordance with manufacturer's recommendations.

B. Fit exposed connections to form tight, hairline joints.

C. Set work accurately in location, set posts and align to within 1/4 inch in 12 feet.

D. Do not weld, cut or abrade railings which have been finished after fabrication and are to be field connected by mechanical means.

E. Anchoring Posts:
1. Concrete:
   a. Anchor posts in concrete by means of core drilling holes.
   b. Fill annular space between posts and sleeves solid with non-shrink, non-metallic grout.
   c. Leave anchorage joint exposed; wipe off excess grout and leave flush with adjacent floor.

3.3 ADJUSTING AND CLEANING

A. Protect finishes of railings from damage during construction by use of temporary protective coverings approved by railing manufacturer. Remove protective covering at project completion. Restore finishes damaged during installation and construction period.

END OF SECTION

05/03/13 PERMIT SET

SECTION 061000

ROUGH CARPENTRY

PART 1 - GENERAL

1.1 SUMMARY

A. Section Includes: Wood blocking within building and on roof; panel equipment boards.

1.2 DEFINITIONS

A. Blocking: Wood used for plates, furring, shimming, stripping, sleepers, grounds, curbing, cants, bracing, nailers, and filling in between framing members.

1.3 SUBMITTALS

A. Product Data: Provide product data on wood treatment materials; include historical performance information.

1.4 QUALITY ASSURANCE

A. Grade Marks:
   1. Identify lumber and plywood by official grade mark.
   2. Lumber: Include symbol of grading agency, mill name, grade, species, grading rules, and condition of seasoning at time of manufacturer.
   3. Plywood: Include type, class identification index, and agency mark.
   4. Pressure treatment: Include quality mark of grading agency which maintains continued supervision, testing, inspection, and re-examination service over product quality as described in AWPA standards.

B. Certifications: Submit manufacturer's certification that products furnished for Project meet or exceed specified requirements.

1.5 DELIVERY, STORAGE AND HANDLING

A. Deliver, store, and handle products in accordance manufacturer’s instructions.

B. Storage and Protection:
   1. Store products above ground, on platforms or skids, and covered with waterproof coverings.
   2. Store products with ventilation, drainage, and protection against damp or wet locations.
   3. Support products to prevent warping and distortion.

PART 2 - PRODUCTS

2.1 SOLID SAWN LUMBER

A. Lumber Grading Agency: Certified by American Lumber Standards Committee or NLGA.

B. Grading rules of NLGA, SPIB, WCLIB, and WWPA apply to respective materials furnished.

C. Comply with PS-20.

D. Dimensions: Lumber dimensions are nominal; actual dimensions conform to PS-20 and applicable rules writing agencies.

E. Maximum moisture content at time of dressing: 19 percent.

F. Surfacing: Surface four sides (S4S), unless noted otherwise.

G. Finger-jointed lumber is not permitted.

H. Size Classification: 2 inches to 4 inches thick, 2 inches to 4 inches wide.

I. General Non-Structural Framing: Stud grade, any species.

J. Blocking: Utility grade, any species.

2.2 PLYWOOD

05/03/13 PERMIT SET

A. General: Provide composite wood without added urea-formaldehyde resins complying with Cal-GREEN Table 5.504.4.5 - Formaldehyde Limits requirements.

B. Grading Rules:
   1. PS-1 or APA PRP-108.
   2. Plywood Grading Agency: Certified by APA.

C. Uses, Grades, and Ratings:
   1. Equipment Panel Boards:
      a. Rated Sheathing.
      b. Exposure 1.
      c. Grade: A-C, void free.
      d. Thickness: 23/32 inches minimum.

2.3 FASTENERS

A. Provide fasteners in sizes, spacings, and locations to suit applications.

B. Provide hot-dipped galvanized or stainless steel fasteners for use with preservative treated and fire-retardant treated wood and for exterior use or where built into exterior walls. Select fasteners for the type, grade and class required.

C. Anchors:
   1. Toggle bolt type for anchorage to hollow masonry.
   2. Expansion shield and lag bolt type for anchorage to solid masonry or concrete.
   3. Bolts or ballistic fasteners for anchorage to steel.
   4. Bolts and Nuts: Regular hexagon head type, ASTM A307, Grade A.
   5. Eyebolts: ASTM A489.
   6. Machine Screws: ASME B18.6.3.
   7. Lag Bolts: ASME B18.2.1.
   8. Wood Screws: Flat head, ASME B18.6.1.
   9. Plain Washers: Round, ASME B18.22.1.
   10. Lock Washers: Helical, spring type, ASME B18.21.1.
   11. Masonry Anchorage Devices: Expansion shields.
   12. Toggle Bolts: Tumble-wing type, class and style as required.

2.4 ACCESSORIES

A. Adhesive:
   1. APA AFG-01.
   2. Waterproof, air cured type, cartridge dispensed.
   3. VOC Limits: 30 g/l maximum for wood substrates.

B. Adhesives and sealants shall meet or exceed the VOC and chemical component limits of Cal-GREEN Table 5.504.4.1 Adhesive VOC Limit, and Cal-GREEN Table 5.504.4.2 Sealant VOC Limit requirements.

2.5 WOOD TREATMENTS

A. Kiln dry pressure-treated products after treatment to following maximum moisture contents:
   1. Lumber: 19-percent.
   2. Plywood: 15-percent.

B. Preservative Pressure Treatment:
   1. Solid sawn lumber, decking, and timber: Comply with AWPA C2.
   2. Plywood: Comply with AWPA C9.
   3. Use waterborne preservatives.
   4. Do not incise surfaces of lumber at exposed to view locations.
   5. Treat following Items for Above Ground Use:
      a. Grounds in contact with concrete.
      b. Floor screeds.
      c. Sills, plates, soles, and furring which rest on concrete exterior walls and masonry exterior walls, and are less than 8 inches from exposed earth.

05/03/13 PERMIT SET

d. Sills, plates, soles, furring, blocking, and sleepers on concrete slabs and masonry slabs which are in direct contact with the earth.

6. Acceptable Above Grade Products and Manufacturers:
   a. ACQ Preserve, Chicago Flameproof, Montgomery, IL 60538.
   b. Wolmanized L^3 Outdoor Wood, Arch Chemicals, Inc., Norwalk, CT 06856
   c. Dura-Guard®, Hoover Treated Wood Products, Inc., Thomson, GA 30824.

PART 3 - EXECUTION

3.1 EXAMINATION

A. Examine conditions and proceed with work when substrates are ready.

B. Site Verification of Conditions:
   1. Verify end supports are ready to receive framing.
   2. Before installation, check members for damage, and proper dimensions.

3.2 PREPARATION

A. Wood Treatment Applied to Cut Surfaces at Site:
   1. Comply with AWPA M4.
   2. Apply preservative treatment in accordance with manufacturer's instructions to:
      a. Preservative pressure treated wood site-sawn ends.
      b. Holes cut through preservative pressure treated wood.
   3. Allow preservative to cure prior to erecting members.

3.3 CONSTRUCTION

A. General:
   1. Construct plumb, level, true to line, square, and free from warp or twist while maintaining dimensional tolerances and alignment with surrounding construction.
   2. Comply with AFPA NDS for attaching to substrates by anchoring and fastening to draw and securely hold members rigidly in place.
   3. Install fasteners at spacings required by more stringent requirements of AFPA NDS or applicable building code.
   4. Comply with APA E30 requirements for plywood.
   5. Place horizontal and sloped members with crown edge up.
   6. Place vertical members with crown edge facing in same direction.
   7. Discard Material:
      a. With defects which might impair quality of work.
      b. Which are too small to fabricate work with minimum joints or optimum joint arrangement.
   8. Scribe, cope, and construct members accurately cut and fitted.
   9. Make tight connections between members to develop full member strength.
   10. Locate members as indicated. Do not change size, spacing, or spans without Engineer's specific approval. Take care to place species and grades of members where indicated.
   11. Do not splice framing members between support points.
   12. Cut, notch, or bore members for passage of pipes and conduits in accordance with AFPA WCD. Reinforce members by use of formed sheet metal accessories.
   13. Fasteners:
      a. Use washers under bolt heads and nuts.
      b. Select fasteners of size that will not penetrate members where opposite side will be exposed to view or will receive finish materials.
      c. Install fasteners without splitting wood; predrill as necessary.
   14. Shimming:
      a. Concrete and masonry bearing: Use steel or slate shims.
      b. Metal and wood bearing: Do not use shims.

B. Wood Blocking:
   1. Construct using maximum practical lengths.

05/03/13 PERMIT SET

2. Provide and locate continuous blocking to facilitate installation and attachment of wall mounted equipment, cabinets, millwork, finishing materials, fixtures, specialty items, and trim.
3. Cut and form to shapes for true line and level of work to be attached.
4. Coordinate location with other work involved.
5. Secure to masonry with metal plugs, toggle bolts, or expansion bolts set in masonry.
6. Attach to substrates to support applied loading.
7. Countersink bolts and nuts flush with wood surfaces.
8. Size as necessary unless specific size is indicated.

C. Plywood Sheathing:
1. General:
   a. Install panels with joints between panels staggered over center of supports.
   b. Install over two or more supports.
   c. Install with end joints staggered.
   d. Install with panel joints not more than 1/8 inch wide.
2. Plywood Backing and Mounting Boards:
   a. Install for equipment where indicated.
   b. Oversize panel by 12 inches beyond equipment perimeter.

3.4 TOLERANCES

A. Lumber Framing Members: 1/4 inch maximum from true position.

3.5 PROTECTION

A. Protect finished work.

B. Protect products from moisture absorption and subsequent warping or deterioration until subsequent construction can proceed.

END OF SECTION

05/03/13 PERMIT SET

SECTION 062000

FINISHED CARPENTRY

PART 1 - GENERAL

1.1 SUMMARY

A. Section Includes: Painted MDF wall base.

B. Related Sections:
   1. Section 061000 - Rough Carpentry: Blocking, bracing and back-up framing.
   2. Section 099000 - Painting and Coating: Field finishing.

1.2 DEFINITIONS

A. Comply with applicable provisions of *Architectural Woodwork Standards*, 1st Edition, October 2009, as adopted and published by Architectural Woodwork Institute and the Woodwork Institute.

1.3 SUBMITTALS

A. Product Data: Provide technical data on wood treatment materials, application instructions, and historical performance information.

B. Shop Drawings:
   1. Indicate profiles, sections, sizes, thicknesses, quantities, markings, materials, wood species, finishes, accessories, and locations of each item.
   2. Include assembly and installation drawings to show methods of wood blocking, fastening, bracing, jointing, and connecting to work of other trades.
   3. Scale: 3/4 inch = 1 foot for full sections, and 3 inches = 1 foot for details.

1.4 QUALITY ASSURANCE

A. Fabrication and Installation Standards: Fabricate and install in accordance with Architectural Woodwork Standards Edition 1, as listed below.
   1. Standing and running trim: AWS Section 6.
   2. Installation: AWS Appendix B – 12 Installation.

1.5 DELIVERY, STORAGE AND HANDLING

A. Deliver, store, handle, and protect products in accordance with manufacturer's instructions and Section 2, of the AWS Manual, 1st Edition, Care and Storage.

B. Protect materials from damage, soiling, and deterioration.

C. Do not deliver finish carpentry materials until job site conditions and operations which could damage, soil or deteriorate work are complete.

D. Store products and materials in ventilated, interior locations under constant minimum temperature of 60 degrees F and relative humidity not to exceed 55 percent.

1.6 ENVIRONMENTAL REQUIREMENTS

A. Install interior finish carpentry products only when temperature and humidity conditions have been stabilized and will be maintained.

B. Maintain temperature and moisture conditions as recommended by woodwork fabricator from date of installation through remainder of construction period.

PART 2 - PRODUCTS

2.1 MATERIALS

A. General:
   1. Provide materials that comply with requirements of AWS woodworking standard for each type woodwork and quality grade indicated.
   2. Products surfaced four sides, unless noted otherwise.

05/03/13 PERMIT SET

3. Finish level: Custom.

B. Medium Density Fiberboard: ANSI A208.2, Classification M-3.
   1. Base:
      a. Formaldehyde free material.
      b. Size: As indicated on Drawings.
      c. Finish: Field Painted.
   2. General: Provide composite wood without added urea-formaldehyde resins complying with Cal-GREEN Table 5.504.4.5 - Formaldehyde Limits requirements.

2.2 ACCESSORIES

A. Wall Adhesive: Solvent release cartridge type, compatible with substrate, capable of achieving durable bond.
   1. Adhesives and sealants shall meet or exceed the VOC and chemical component limits of Cal-GREEN Table 5.504.4.1 Adhesive VOC Limit, and Cal-GREEN Table 5.504.4.2 Sealant VOC Limit requirements.

B. Bolts, Nuts, Washers, Lags, Pins, Nails, and Screws: Size and type to suit application.

2.3 FINISH

A. Refer to Section 099000 and finish schedule.

PART 3 - EXECUTION

3.1 EXAMINATION

A. Examine conditions and proceed with work when substrates are ready.

B. Verify that field measurements are as shown on shop drawings.

C. Verify that mechanical, electrical, and other items affecting work of this Section are in place and ready to receive the work.

D. Verify blocking, bracing, and back-up framing have been installed in accordance with Section 061000 or 092900.

3.2 PREPARATION

A. Prime paint or seal concealed surfaces and items or assemblies which will be in contact with cementitious materials or surfaces.

B. Make field cuts with extreme care to avoid splintering.

3.3 INSTALLATION

A. General: Install work in accordance with manufacturer's instructions and approved shop drawings.

B. Install work in accordance with specified AWS quality standards.

C. Tolerances:
   1. Set and secure materials and components, rigid, plumb, and square.
   2. Maximum offset from true alignment with abutting materials: 1/32 inch unless otherwise specified or required by AWS grade.
   3. Maximum Variation from True Position: 1/16 inch unless otherwise specified or required by AWS quality grade.

D. Shim as required using concealed shims.

E. Cut to fit to exact size. Where woodwork abuts other finished work, scribe and cut for accurate fit. Where necessary to fit at site, provide ample allowance for cutting and fitting.

F. Drill pilot holes at corners before making cutouts.

G. Distribute defects in accordance with AWS quality grade.

H. Install trim and molding in unjointed lengths for openings and for runs less than maximum length of lumber available. For longer runs, use only one piece less than maximum length available in straight run.

05/03/13 PERMIT SET

I. Stagger joints in adjacent members.

J. Cope moldings at returns and miter at corners.

K. Attach wall base securely in place with uniform joints providing for thermal, moisture, and building movements; blind nail where possible.

L. Use finishing screws where exposed.

M. Sanding/Filling:
   1. Sand work smooth and set exposed nails and screws.
   2. Apply wood filler in exposed nail and screw indentations and leave ready to receive finishes.
   3. On items to receive transparent finishes, use wood filler to matches surrounding surfaces and required for finishes.

N. Secure woodwork to anchors, built-in blocking, or directly attach to substrates.

END OF SECTION

05/03/13 PERMIT SET

SECTION 064000

ARCHITECTURAL WOODWORK

PART 1 - GENERAL

1.1 SUMMARY

A. Section Includes:
   1. Opaque conversion varnish finish MDF cabinets.

B. Related Sections:
   1. Section 123664 – Quartz Countertops.

1.2 DEFINITIONS

A. Comply with applicable provisions of *Architectural Woodwork Standards* (AWS), 1st Edition, October 2009, as adopted and published by Architectural Woodwork Institute and the Woodwork Institute.

B. MDF: Medium Density Fiberboard.

C. Exposed: As used in this Specification Section, "exposed" portions of woodwork include surfaces visible when doors and drawers are closed. Bottoms of woodwork more than 4 feet above finish floor are considered exposed. Visible surfaces in open casework or behind clear doors also are considered as exposed.

D. Semi-Exposed: As used in this Specification Section, "semi-exposed" portions of woodwork include those members behind opaque doors, such as shelves, divisions, interior faces of ends, case backs, drawer sides, backs and bottoms, and back face of doors. Tops of cases 6'-6" or more above finish floor shall be considered semi-exposed. Bottoms of woodwork less than 4 feet above finish floor are considered semi-exposed.

1.3 PERFORMANCE REQUIREMENTS

A. Wall mounted cabinets: Able to withstand minimum cabinet-to-wall connection load of not less than 60 pounds per linear foot.

1.4 SUBMITTALS

A. Product Data: Manufacturer's specifications and installation instructions for hardware and accessory items.

B. Shop Drawings:
   1. Indicate elevations, profiles, sections, quality, and views of woodwork fabrications at scale large enough to permit checking for design conformity (typically 3/4 inch = 1 foot for full sections, and 3 inches = 1 foot for details).
   2. Show sizes, thicknesses, quantities, markings, materials, finishes, accessories, hardware, and locations of each item.
   3. Include assembly and installation drawings to show methods of wood blocking, fastening, bracing, jointing, and connecting to work of other trades.
   4. Indicate dimensions necessary for fitting woodwork and appliances to fixed walls. Be responsible for details and dimensions not controlled by Project conditions.
   5. Indicate cut-out locations, plumbing fixtures, mechanical and electrical devices, and other items occurring in woodwork.

C. Samples:
   1. Panel: Panels with shop finish for opaque lacquer appearance, cut, and finish; 12 by 12 inches.
   2. Exposed and Semi-Exposed Cabinet Hardware: One set of each type and finish.

D. Submit following Informational Submittals:
   1. Certification: Submit certifications specified in Quality Assurance article.
   2. Qualification Data:
      a. Submit fabricator's qualifications verifying years of experience.

05/03/13 PERMIT SET

b. Include list of completed projects having similar scope of Work identified by name, location, date, reference names, and phone numbers.

1.5 QUALITY ASSURANCE

A. Fabrication and Installation Standards: Fabricate and install in accordance with Architectural Woodwork Standards, Edition 1 as listed below.
1. Lumber grades: AWS Section 3.
2. Panel products: AWS Section 4.
3. Standing and running trim: AWS Section 6.
4. Casework: AWS Section 10.
5. Installation: AWS Appendix B - 12.

B. Fabricator Qualifications: Company specializing in fabrication, finishing, and installation of specified quality of architectural woodwork having minimum of 5 years documented experience under current legal name.

C. Certifications:
1. Submit fabricator's certification that products furnished for Project meet or exceed specified requirements.

1.6 PRE-INSTALLATION CONFERENCE

A. Conduct pre-installation conference.

B. Agenda:
1. Discuss and agree upon acceptable delivery, storage, and handling, environmental conditions, preparatory work, and methods of installation.
2. Review coordination and environmental controls required for proper installation and ambient temperature and humidity conditioning in areas to receive woodwork.]

1.7 DELIVERY, STORAGE, AND HANDLING

A. Deliver, store, and handle products in accordance manufacturer's instructions.

B. Protect materials from damage, soiling, and deterioration during transit and storage.

C. Do not deliver woodwork materials until Project site conditions and operations which could damage, soil, or deteriorate work are complete.

D. Store products and materials in ventilated interior locations under constant minimum temperature and relative humidity.

1.8 PROJECT CONDITIONS

A. Environmental Requirements: Provide temperature and moisture conditions as recommended by woodwork fabricator for storage and installation, including remainder of construction period.

B. Field Measurements:
1. Field measure conditions where woodwork is indicated to be fitted to other construction prior to fabricating work of this Section.
2. Show final field measurements on shop drawings.
3. Where field measurements cannot be made without delaying Project, coordinate dimensions among trades to ensure proper fit of woodwork.

1.9 WARRANTY

A. Furnish warranty with provisions for repairing or replacing, at no additional cost to Owner, architectural woodwork items that exhibit defects in material or workmanship for 2 years.

PART 2 - PRODUCTS

2.1 MATERIALS

A. General:
1. Provide materials that comply with requirements of AWS woodworking standard for each type woodwork and quality grade indicated.

2. Products surfaced four sides, unless noted otherwise.

B. Lumber:
1. Interior Trim, Softwood Lumber: Comply with PS 20.
2. Interior Trim, Hardwood Lumber: Comply with FS MM-L-736C.

C. Medium Density Fiberboard (MDF): ASTM D1037 and ANSI A208.2, Classification M-3.
1. No added Urea Formaldehyde material.
2. Density: Minimum of 48 PCF.
3. Thickness:
a. Panel structural components: Minimum 3/4 inch thick.
b. Back Panels, Drawer Components, and Drawer Bottoms: Minimum 1/2 inch thick.
c. Fixed Shelves, Dividers, Mounting Stretchers: Minimum 3/4 inch thick.
d. Semi-exposed Adjustable Shelves in Cabinets under 36 inches Wide: Minimum 3/4 inch thick.
e. Shelves in Cabinets 36 inches Wide or Greater: Minimum 1 inch thick.

D. Quartz Countertops: Refer to Section 123664.

2.2 COMPONENTS

A. Hardware:
1. Drawer Slides:
a. General: Steel ball-bearing, full extension, 75 pound capacity minimum, drawer hold-in closed position.
b. Acceptable Manufacturers:
1) Accuride, Santa Fe Springs, CA.
2) Hettich America LP, Alpharetta, GA.
3) Hafele.
2. Hinges:
a. General: Concealed "European" style, 95 degree opening.
b. Acceptable Manufacturers:
1) Julius Blum Company, Inc., Wood Ridge, NJ.
2) Grass America, Inc., Kernersville, NC.
3) Stanley Hardware, New Britain, CT.
3. Pulls: As indicated on Drawings.
4. Shelf Support Pins:
a. Nickel Steel.
b. Location: 4 per shelf.
c. Acceptable Products and Manufacturers:
1) Hafele 282.04.711.
2) Knape & Vogt 333.
3) Lamp SS 323.

2.3 ACCESSORIES

A. Fasteners: Size and type to suit application, finish to match hardware.

2.4 FABRICATION

A. Fabrication and Installation Standard: AWS Section 10.
1. Quality standard: Custom.
2. Construction: AWS Construction Type A, frameless and cabinet and door interface style 1, overlay.

B. General: Shop assembled casework for delivery to site in units sized for ease of handling and to permit passage through building openings.
1. Prime concealed and semi-concealed surfaces with sealer. Brush apply only.
2. Provide cutouts for plumbing fixtures, hardware, inserts, appliances, electrical work, and other fixtures. Verify locations of cutouts. Seal or prime paint contact surfaces of cutouts.
3. Route or groove back of flat trim members, kerf backs of other wide flat members except plywood or veneered members.

05/03/13 PERMIT SET

C. When necessary to cut and fit on site, provide materials with ample allowance for cutting. Provide trim for scribing and site cutting.

D. Fabricate shelving and countertop surfaces pressure glued to MDF core backing without visible joints.

2.5 FINISH

A. Shop finish work in accordance with AWS Section 5. No field finishing permitted except for minor retouching.

B. Apply 2 coats of sealer to concealed cabinets interiors.

C. AWS System 5 Conversion Varnish:
   1. Degree of Sheen: Full gloss opaque color.
   2. Effect: Smooth, gloss solid color finish.
   3. Finish color as selected by Engineer.

PART 3 - EXECUTION

3.1 EXAMINATION

A. Examine conditions and proceed with work when substrates are ready.

B. Verify that blocking is in place and backpriming complete before beginning installation.

C. Verify that field measurements are as shown on shop drawings.

D. Verify that mechanical, electrical, and other items affecting work of this Section are in place and ready to receive the work.

E. Verify building HVAC systems are operating and temperature and moisture conditions as recommended by woodwork fabricator for installation have been achieved and will remain in effect for remainder of construction period.

3.2 PREPARATION

A. Make field cuts with care to avoid splintering.

3.3 INSTALLATION

A. General:
   1. Install work in accordance with specified AWS quality standards. Handle materials to avoid dents and other damage.
   2. Distribute defects allowed in quality grade to best overall advantage when installing Project assembled woodwork items.
   3. Shim as required using concealed shims.
   4. Before making cutouts, drill pilot holes at corners.
   5. Tolerances for Field Assemblies/Joined Items:
      a. Maximum Variation from True Position: 1/16 inch unless otherwise specified or required by AWS grade.
      b. Maximum Offset from True Alignment with Abutting Materials: 1/32 inch unless otherwise specified or required by AWS grade.

B. Field Fitting:
   1. Cut to fit and carefully scribe.
   2. Where work abuts other finished surfaces, scribe and cut for accurate fit.
   3. Do not use overlay trim pieces to cover joints.

C. Architectural Cabinets:
   1. Set and Secure Casework and Components. Use joint fasteners to align and secure adjoining cabinets and countertops. Affix base cabinets to floor.
   2. Secure to anchors, built-in blocking, or directly attach to substrates where capable of adequately supporting load. Use toggle bolt type fasteners for wall mounted components. Secure countertops to base cabinets.
   3. Install hardware in accordance with manufacturer's recommendations. Adjust and leave in proper working order.

05/03/13 PERMIT SET

3.4 CLEANING AND PROTECTION

A. Protect casework from marring, defacement, or other damage until final completion.

B. Clean spaces of debris and vacuum and wipe down casework. Leave in condition ready for use.

END OF SECTION

05/03/13 PERMIT SET

SECTION 068213

PLASTIC PANELS

PART 1 - GENERAL

1.1 SUMMARY

A. Section Includes:
   1. Cast polymethyl methacrylate (PMMA) resin panels.
   2. Stainless steel wire rope suspension system.

1.2 SUBMITTALS

A. Product Data: Submit manufacturer's descriptive data and maintenance instructions; include recommended cleaning materials, application methods and precautions in use of cleaning materials which may be detrimental to surface if improperly applied.

B. Shop Drawings:
   1. Prepare for each acrylic resin panel item including plans, elevations, and detail sections.
   2. Indicate methods of hanging, joining, profiles, reinforcing, fasteners, clearances, relationship with adjoining work and other related items.
   3. Include information regarding concealed and exposed joints, welds, and fastenings.

C. Samples:
   1. Furnish sample 9 inch by 9 inch for each type and pattern selected.
   2. Provide one complete unit of suspension system, including wire rope and fittings.

D. Closeout Submittals:
   1. Maintenance Data: Submit manufacturer's printed, recommended maintenance instructions including cleaning materials.

1.3 QUALITY ASSURANCE

A. Fabricator Qualifications: Firm experienced in producing plastic panels.

B. Installer Qualifications: Arrange for fabrication installation by firm that can demonstrate successful experience in installing products similar in type and quality to that required for this Project.

1.4 MOCK-UPS

A. Mockup: Prior to fabricating or installing glass fiber reinforced cast resin fabrications, construct mockup to verify selections made under sample submittals and to demonstrate aesthetic effects as well as qualities of materials and execution. Build mockup full-size using materials indicated for final units of work, and complying with following requirements.
   1. Locate mockup on site in location indicated or, if not indicated, as directed by Engineer.
   2. Notify Engineer one week in advance of date and time when mockup will be installed.
   3. Demonstrate proposed range of aesthetic effects and workmanship.
   4. Obtain Engineer's acceptance of mockup before start of final unit of Work.
   5. Retain and maintain mockup during construction in undisturbed condition as standard for judging completed Work.

B. Accepted mockup in undisturbed condition at time of Substantial Completion may become part of completed Work.

1.5 PRE-INSTALLATION CONFERENCE

A. Pre-Installation Conference: Conduct pre-installation conference to address project conditions for installation.

1.6 DELIVERY, STORAGE, AND HANDLING

A. Deliver, store, and handle products in accordance manufacturer's instructions.

B. Take care to prevent damage during delivery and handling.

C. Store panels in undamaged condition as packaged by manufacturer with seals and labels intact.

05/03/13 PERMIT SET

D. Store materials in clean, dry storage area.

1.7 PROJECT CONDITIONS

A. Environmental Conditions: Obtain and comply with fabricator's and Installer's coordinated advice for optimum temperature and humidity conditions for fabrications during its storage and installation.

B. Field Measurements: Where fabrications are indicated to be fitted to other construction, check actual dimensions of other construction by accurate field measurements before fabrication, and show recorded measurements on final Shop Drawings. Coordinate fabrication schedule with construction progress to avoid delaying Work.

PART 2 – PRODUCTS

2.1 MATERIALS

A. Cast PMMA Resin Panels:
   1. Material: High performance polymer resin.
   2. Pattern and Color: Struttura Duo by 3Form; color as noted per architectural drawings.
   3. Thickness: 3/16 inch.
   4. Flammability and Smoke Testing:
      a. Smoke Density: ASTM D2843, 4.1%, pass less than 75
      b. Flame Spread: ASTM D635, Rate of Burning 1.2 in/min; pass CC2.
      c. Self-Ignition Temperature: ASTM D1929, 852 degrees F, pass greater than 850 degrees F.
   5. Attachment Hardware:
      a. Exposed finished stainless steel wire rope system with wire rope, termination fittings and panel clips for multi-point support system for each panel.
      b. Product: 3-Form Suspend Solutions

2.2 ACCESSORIES

A. Provide fasteners as detailed for mounting and conditions encountered.

PART 3 - EXECUTION

3.1 EXAMINATION

A. Examine conditions and proceed with work when substrates are ready.

B. Examine substrate surfaces and correct defects before beginning work.

C. Verify other trade work that penetrates substrate has been completed before beginning installation.

3.2 INSTALLATION

A. Install in strict compliance with each panel manufacturer’s instructions.

B. Follow manufacturer’s printed instructions for installation of panels to ensure a smooth, plumb, and level surface.

C. Provide hardware devices and fasteners for securing panel items to in-place construction.

END OF SECTION

SECTION 072100

THERMAL INSULATION

PART 1 - GENERAL

1.1 SUMMARY

A. Section Includes:
   1. Batt insulation above suspended ceilings.

B. Related Sections:
   1. Section 092900 – Gypsum Board: Acoustical Insulation.

1.2 SUBMITTALS

A. Product Data: Submit product data for each product.

1.3 DELIVERY, STORAGE, AND HANDLING

A. Deliver, store, and handle products in accordance manufacturer's instructions.

B. Identify products with appropriate markings of applicable testing and inspecting organization.

C. Storage and Protection:
   1. Store materials raised off floor or ground and under cover to keep dry.
   2. Protected from weather, direct sun light, contamination, sources of ignition, and damage from construction operations.

PART 2 - PRODUCTS

2.1 MATERIALS

A. Fiberglass Insulation – General Requirements:
   1. Preformed Units: Sizes to fit applications indicated; selected from manufacturer's standard thicknesses, widths, and lengths.
   2. Use formaldehyde free materials where available.
   3. Maximize use of recycled material with minimum of 20 percent recycled glass cullet.

B. Fiberglass Batt Insulation – Unfaced.
   1. General:
      a. Glass fiber composition, friction fit type, unfaced.
      b. Thermal resistance "R" values:
         1) Ceilings: R-19.
   2. Thermal resistance: ASTM C518, "R" value of 3.2 per inch of thickness at 75 degrees F mean temperature.
   3. Fire rating: ASTM E84, Flame spread 25 or less and smoke development 50 or less.
   4. Acceptable Products:
      a. Unfaced Building Insulation, CertainTeed.
      b. Thermal Batt Insulation, Owens Corning.
      c. Unfaced Thermal-SHIELD, Johns Manville Corporation.

C. Refer to Section 092900 for acoustical insulation.

PART 3 - EXECUTION

3.1 EXAMINATION

A. Examine conditions and proceed with work when substrates are ready.

B. Verify that work of other trades which will be covered by insulation is complete, approved, and tested.

3.2 INSTALLATION

A. General: Comply with manufacturer's instructions.

05/03/13 PERMIT SET

B. Batt Installation:
   1. Install insulation after ceiling suspension system has been installed.
   2. Provide accessories to ensure insulation remains in specified position.
   3. Fit insulation tight within spaces leaving no gaps or voids.
   4. Butt insulation tightly.
   5. Cut and fit tightly around items penetrating insulation.
   6. Stagger butt joints.
   7. Use batts free of damage.
   8. Install insulation to avoid voids or openings to occur.
   9. Cut and trim insulation neatly, to fit spaces.
   10. Cut insulation oversize to ensure tight butt joints when installed. Cut insulation to fit around protrusions and irregularly shaped projections.

3.3 PROTECTION

A. Protect finished work.

B. Protect insulation from moisture until building is made watertight.

END OF SECTION

05/03/13 PERMIT SET

SECTION 074213

METAL WALL PANELS

PART 1 - GENERAL

1.1 SUMMARY

A. Section Includes:
1. Factory formed, field assembled aluminum corrugated panels, complete with related flashings, closures, drips, trim, fasteners, and accessory components.
2. Supplementary framing, subgirts, clips, anchoring devices, fasteners, and accessories.

1.2 SYSTEM REQUIREMENTS

A. Design Requirements:
1. Manufacturer is responsible for designing system, including anchorage to structural system and necessary modifications to meet specified requirements, including code dictated wind loads, and to maintain visual design concepts.
2. Drawings are diagrammatic and are intended to establish basic dimension of units, sight lines, and profiles of units.
3. Make modifications only to meet field conditioned and to ensure fitting of system components.
4. Obtain Engineer's approval of modifications.
5. Provide concealed fastening wherever possible.
6. Attachment considerations: Account for site peculiarities and expansion and contraction movements so there is no possibility of loosening, weakening and fracturing connection between units and building structure or between components themselves.
7. Obtain Engineer's approval for connections to building elements at locations other than indicated in Drawings.
8. Accommodate building structure deflections in system connections to structure.

B. Performance Requirements:
1. System to accommodate movement of components without buckling, failure of joint seals, undue stress on fasteners, or other detrimental effects when subjected to seasonal temperature changes and live loads.
2. Provide positive drainage to exterior for moisture entering or condensation occurring within panel system.

C. Interface With Adjacent Systems:
1. Integrate design and connections with adjacent construction.
2. Accommodate allowable tolerances and deflections for structural members in installation.

1.3 SUBMITTALS

A. Product Data:
1. Submit product data for each product.
2. Include information for sealants, accessories, and other required components.

B. Shop Drawings:
1. Submit total layout, including dimensions, construction details, profiles, supports, anchorage, trim, flashing, and methods of anchorage and attachment.
2. Show details of weatherproofing at edges, terminations, and change of profiles.
3. Indicate panel terminations and transitions, including intersections with masonry, roof panels, and change of direction pieces.
4. Show subgirts and fasteners.
5. Include elevation showing complete layout of each wall.

C. Samples:
1. Submit 2 by 3 foot composite sample panel of each type, complete with face panel, subgirts, and liner panels.

05/03/13 PERMIT SET

2. Upon selection of custom colors by Engineer, submit 12 by 12 inch finish samples representing color and finish.

1.4 QUALITY ASSURANCE

A. Manufacturer Qualifications:
   1. Company specializing in factory fabrication of metal wall panels.
   2. Minimum 10 years documented experience.

1.5 DELIVERY, STORAGE AND HANDLING

A. Deliver, store, and handle products in accordance manufacturer's instructions.

B. Protection:
   1. Protect products and accessories from damage and discoloration during transit and at Project site.
   2. Store materials on built-up surfaces.
   3. Slope panels for drainage, and to protect against damage by weather and construction operations.

PART 2 - PRODUCTS

2.1 MATERIALS AND COMPONENTS

A. Metal Materials:
   1. Aluminum Sheet: Coil-coated primed sheet, ASTM B209, alloy as standard with manufacturer, with temper as required to suit forming operations and structural performance required.
   2. Finish: Prime painted for field finishing.

B. Corrugated Panels: Overlapping panels for exposed fasteners.
   1. 34 inch minimum exposed width.
   2. Match existing profile.
   3. Corrugations of 3/4 to 7/8 inch.
   4. Metal Thickness: 0.032 inch minimum.
   5. Finish: Prime painted.
   6. Closures: Contour type rubber, neoprene, or metal as recommended by manufacturer; shape to match panel profile.
   7. Basis of Design Corrugated Panels:
      a. Econolap 3/4" - 34" Siding, Centria Architectural Systems.
      b. PBC Panel, MBCI.
      c. "Nu-Wave" Corrugated, BHP.
      d. Corrugated, Fabral.

C. Subgirt Framing Components:
   1. Sheet steel with 1.25 ounce per sq ft galvanized coating.
   2. Size, configuration, gage, and spacing to accept metal panel system for attachment to building frame; 16 gage thickness minimum.

D. Internal and External Corner Trim:
   1. Same materials, thickness, and finish as adjacent panels.
   2. Profile to suit system; brake formed to required angles.
   3. Mitered internal corners, back braced to maintain continuity of profile.

E. Flashing, Copings, Trim, Closure Pieces, Drips, and Accessories:
   1. Same material, thickness, and finish as adjacent metal panels, brake formed to required profiles.
   2. Comply with standards conforming to recognized industry standard sheet metal practice.

F. Fasteners:
   1. 300 series stainless steel with neoprene washers and exposed screw head color matched to adjacent panel where exposed.
   2. Use exposed fasteners aligned in both directions to attach corrugated panels to subframing.

05/03/13 PERMIT SET

3. Provide metal-backed neoprene washers under heads of exposed fasteners bearing on weather side of panels.

2.2 FABRICATION

A. Forming: Factory form, uniformly dimension, one-piece lengths to avoid field cutting where possible.

B. Fabrication of panels on site not permitted.

PART 3 - EXECUTION

3.1 EXAMINATION

A. Examine conditions and proceed with work when substrates are ready.

B. Examine framing and adjacent surfaces for conditions that would adversely affect execution.

C. Examine alignment of support system and verify that acceptable tolerances have been met.

3.2 INSTALLATION

A. Install system in accordance with manufacturer's instructions.

B. Subgirts:
1. Install subgirts on spacing determined by manufacturer to comply with design requirements.
2. Install subgirts parallel to each other, securely fastened to structure to transfer live and dead loads to structure.
3. Install girts, angles, and other secondary structural panel support members and anchorage in accordance with AISC Manual of Steel Construction "Code of Standard Practice."

C. Fastening:
1. Provide expansion and contraction movement capability as necessary.
2. Permanently shim and fasten panel system to subgirt framing system at spacing required by panel manufacturer.
3. Align, level, and plumb, within specified tolerances.
4. Use concealed fasteners for flat panels; exposed fasteners may only be used on portions of applied trim if necessary.
5. Locate and space exposed fasteners in true vertical and horizontal alignment.
6. Use proper tools to obtain controlled uniform compression for positive seal without rupture of neoprene washer.

D. Install accessories, flashings, closures, and related trim to provide complete watertight system.

E. Seal and place gaskets to prevent weather penetration.

F. Coordinate installation of panels with adjacent construction to ensure watertight enclosure.

G. Tolerances:
1. Maximum offset from true alignment between adjacent members butting or in line: 1/8 inch.
2. Maximum variation from plane or location indicated on Drawings: 1/4 inch.

H. Field adjust and align using adjustments within fastening methods.

3.3 CLEANING

A. Perform wipe-down cleaning as work progresses.

3.4 PROTECTION

A. Protect finished work.

B. Protect panel system from damage, staining, or soiling after installation. Replace components which have been scratched, dented, or otherwise showing signs of damage or improper installation.

END OF SECTION

05/03/13 PERMIT SET

SECTION 076000

FLASHING AND SHEET METAL

PART 1 - GENERAL

1.1 SUMMARY

A. Section Includes: Sheet metal flashing, counterflashing, and associated trim.

1.2 REFERENCES

A. Reference Standards: Comply with applicable provisions for design, materials, fabrication, and installation of component parts of Sheet Metal and Air Conditioning Contractors National Association (SMACNA), 6th Edition.

1.3 SUBMITTALS

A. Shop Drawings:
   1. Indicate typical layout including dimensions, configuration, locations, interface with adjacent systems, clearances, tolerances, frequency of attachment, and fabrication details.
   2. Submit detail drawings of transitions, intersections, and connections.

1.4 QUALITY ASSURANCE

A. Fabricator's Qualifications: Company specializing in sheet metal flashing work with 3 years documented experience in similar size and type of installations.

B. Certifications: Submit fabricator's certification that products furnished for Project meet or exceed specified requirements.

1.5 DELIVERY, STORAGE AND HANDLING

A. Deliver, store, and handle products in accordance manufacturer's instructions.

B. Stack pre-formed material to prevent twisting, bending, and abrasions, and to provide ventilation.

C. Prevent contact with materials which may cause discoloration or staining.

PART 2 - PRODUCTS

2.1 MATERIALS

A. Galvanized Steel Sheet:
   1. General: Zinc coating, hot dip galvanized, flattened sheets, chemically treated.
   2. Commerical Quality: ASTM A653, G90
   3. Lock-Forming Quality: ASTM A653, G90
   4. Thickness: As indicated on Drawings; 24 gage minimum or as recommended in Architectural Sheet Metal Manual for intended purposes.
   5. Finish: Mill phosphatized where indicated for painting.

2.2 ACCESSORIES

A. Fasteners:
   1. Materials: AISI Series 300 for stainless and galvanized steel; aluminum for aluminum sheets.
   2. Screws and Bolts: Sufficient size and length to sustain imposed stresses.

B. Solder Materials:
   1. Flux: Type as recommended by sheet material manufacturer; not detrimental to base material.
   2. Solder: ASTM B32, 50 percent tin/50 percent lead for galvanized steel.

C. Asphalt Mastic: SSPC-Paint 12, solvent-type asphalt mastic, containing no asbestos fibers, compounded for 15 mil dry film thickness per coat.

05/03/13 PERMIT SET

D. Sealants:
   1. Silicone—General Purpose sealant specified in Section 079200.
   2. Color as selected by Engineer from full range of manufacturer's standard colors.

2.3 FABRICATION

A. General:
   1. Shop fabricate components to maximum extent possible to minimize site fabrication.
   2. Fabricate to allow for adjustments in field for proper anchoring and joining.
   3. Form sections true to shape, accurate in size, square, free from distortion and defects.
   4. Fabricate cleats and starter strips of same material as sheet, interlockable with sheet.
   5. Fabricate corners from one piece with minimum 18 inch long legs; solder for rigidity; seal with sealant.
   6. Solder
      a. Solder and seal metal joints except those indicated or required to be expansive type joints.
      b. After soldering, remove flux. Wipe and wash solder joints clean.

B. Seams:
   1. Provide following seam types unless noted or detailed otherwise.
   2. Flat: Overlapped and sealed.

C. Sheet Metal Thickness/Mass:
   1. Flashing: In accordance with SMACNA Chapter 4.

D. Flashing and Counter Flashing:
   1. Fabricate as indicated on Drawings and in accordance with SMACNA Architectural Sheet Metal Manual, Chapter 4.
   2. Hem exposed flashings on underside 1/2 inch; miter and seam corners.
   3. Fabricate vertical faces with bottom edge formed outward 1/4 inch and hemmed to form drip.
   4. Fabricate flashings to allow toe to extend minimum 2 inches over wall surfaces.

PART 3 - EXECUTION

3.1 EXAMINATION

A. Examine conditions and proceed with work when substrates are ready.

3.2 PREPARATION

A. Field measure site conditions prior to fabricating work.

B. Install edge strips and cleats before starting installation.

3.3 INSTALLATION

A. General:
   1. Install metal work in accordance with SMACNA.
   2. Install units plumb, level, square, and free from warp or twist while maintaining dimensional tolerances and alignment with surrounding construction.
   3. Apply asphalt mastic on metal surfaces of units in contact with cementitious materials and dissimilar metals.
   4. Fit flashings tight in place. Make corners square, surfaces true and straight in planes, and lines accurate to profiles.
   5. Miter, lap seam and close corner joints with solder. Seal seams and joints watertight.
   6. Install expansion joints at frequency recommended by SMACNA. Do not fasten seams such that movement is restricted.
   7. Coordinate with installation of roofing system and roof accessories.

B. Flashing
   1. Secure flashings in place using concealed fasteners.
   2. Use exposed fasteners only in locations approved by Engineer.

05/03/13 PERMIT SET

3.4 CLEANING

A. Upon completion of each area of soldering, carefully remove flux and other residue from surfaces. Neutralize acid flux by washing with washing soda solution, and then flushing clear water rinse. Use special care to neutralize and clean crevices.

END OF SECTION

05/03/13 PERMIT SET

SECTION 079200

JOINT SEALANTS

PART 1 - GENERAL

1.1 SUMMARY

A. Related Sections:
   1. Section 076000 - Flashing and Sheet Metal.
   2. Section 084413 - Glazed Aluminum Curtain Walls.
   3. Section 092900 - Gypsum Board.
   4. Section 093000 - Tiling.

1.2 DEFINITIONS

A. Use definitions in ASTM C717.

B. Non-Bleeding: Not capable of exuding liquid chemical components of sealant.

C. Non-Staining: Not capable of discoloring joint substrate.

D. One-Stage Sealing: Weatherproof sealing of joints at the exterior face of the wall section; sealant acts as both water and air seal.

E. Primary Seal: Deflector seal in two-stage sealing.

F. Sealant System: Sealant, sealant backing, and primer intended for use in particular condition.

1.3 SUBMITTALS

A. Product Data:
   1. Submit product data and product specifications for each product.
   2. Include data to indicate chemical characteristics, performance criteria, limitations, substrate preparation, installation requirements, and curing requirements.
   3. Include information for accessories and other required components.
   4. Include color charts indicating manufacturer’s full color range available of each sealant type for Engineer's initial selection.

B. Samples: Submit four 1/4 inch diameter by 2 inch long samples illustrating sealant colors for each product exposed to view.

C. Submit following Informational Submittals:
   1. Test Reports: Submit written results of testing specified as part of Source and Field Quality Control articles.
   2. Certifications specified in Quality Assurance article.
   3. Qualification Data: Manufacturer's and installer's qualification data.
   4. Manufacturer's instructions. Include requirements for surface preparation, priming, joint size ratios, adhesion testing, and perimeter conditions requiring special attention.
   5. Manufacturer's field reports.

D. Closeout Submittals:
   1. Warranty: Submit specified warranty.

1.4 QUALITY ASSURANCE

A. Single Source Responsibility:
   1. Provide products for each sealant system from one manufacturer for entire Project, unless otherwise acceptable to Engineer.
   2. Provide products from a single manufacturer to ensure material compatibility where different sealant materials come in direct contact with each other.
   3. Provide each sealant system as complete unit, including accessory items necessary for proper function.

B. Manufacturer Qualifications: Company specializing in manufacturing products specified in this Section with minimum 5 years experience.

05/03/13 PERMIT SET

C. Applicator Qualifications: Acceptable to manufacturer, specializing in applying sealants, with experience on at least 5 projects of similar nature in past 5 years.

D. Certifications:
   1. Manufacturer's Certification that Products:
      a. Furnished for Project meet or exceed specified requirements.
      b. Assembled for each joint are compatible with each other and with joint substrates under conditions of service and application.
      c. Are suitable for the indicated use.
   2. Manufacturer's certification that sealants, primers, and cleaners, comply with local regulations controlling the use of volatile organic compounds.
   3. Contractor's and installer's certification that products are installed in accordance with Contract Documents, based on inspection and testing specified as part of Field Quality Control.

1.5 PRE-INSTALLATION CONFERENCE

A. Conduct pre-installation conference.

B. Convene pre-installation conference 3 weeks prior to commencing work of this Section.

C. Conference Purpose and Agenda:
   1. Visit Project site to analyze site conditions, and inspect surfaces and joints to be sealed in order that recommendations may be made should adverse conditions exist.
   2. Review mock-up and field sample.
   3. Discuss following items:
      a. Substrate conditions.
      b. Preparatory work.
      c. Weather conditions under which work will be done.
      d. Anticipated frequency and extent of joint movement.
      e. Joint design.
      f. Sealant installation procedures.

1.6 DELIVERY, STORAGE AND HANDLING

A. Deliver, store, and handle products in accordance manufacturer's instructions.

B. Deliver materials to site in unopened containers and bundles with labels indicating:
   1. Manufacturer's name.
   2. Product name and designation.
   3. Color.
   4. Expiration period for use.
   5. Working life.
   6. Curing time.
   7. Mixing instructions for multi-component materials.

C. Storage and Protection:
   1. Store products within manufacturer's required temperature and humidity ranges.
   2. Prior to use, condition products within manufacturer's required temperature range, humidity range, and time period.

1.7 PROJECT CONDITIONS

A. Environmental Requirements:
   1. Apply sealant when the following are within manufacturer's limits during and for 24 hours after sealant installation:
   2. Ambient and surface temperatures.
   3. Relative humidity.
   4. Do not apply sealants to wet or frozen surfaces.
   5. Comply with manufacturer's requirements regarding application of sealants in vicinity of curing sealants of a different material.

1.8 WARRANTY

A. Warrant installed products to be free from defects in material, labor, or installation techniques for 20 years on silicones used at exterior building envelope, 2 years at sealants used at interior locations.

B. Include coverage for installed sealants and accessories which:
   1. Fail to achieve air tight seal.
   2. Fail to achieve watertight seal.
   3. Exhibit loss of adhesion.
   4. Exhibit loss of cohesion.
   5. Do not cure.

PART 2 - PRODUCTS

2.1 MATERIALS

A. Acrylic Latex (Designation AL):
   1. Description:
      a. ASTM C834.
      b. Non-sag; non-staining; non-bleeding.
      c. Joint movement range without cohesive/adhesive failure: Plus 7.5 percent to minus 7.5 percent of joint width.
      d. Color: As selected by Engineer from manufacturer's full color range.
   2. Acceptable Products:
      a. AC-20, Pecora Corporation.
      b. Sonolac, Sonneborn Building Products.
      c. Acrylic Latex Tremflex 834, Tremco, Inc.

B. Silicone—General Purpose (Designation S-GP):
   1. Description:
      a. ASTM C920:
         1) Type: S
         2) Grade: NS
         3) Class: 25
         4) Uses: NT, M, G, A, O
      b. Single component, neutral curing, non-staining, non-bleeding silicone sealant.
      c. Medium modulus silicone for metal to metal and metal to adjacent substrates; Low modulus silicone for all other locations.
      d. Joint movement range without cohesive/adhesive failure: Plus 50 percent to minus 50 percent of joint width.
      e. Color: Selected by Engineer from manufacturer's full color range.
      f. Acceptable Medium Modulus Products:
         1) 795, Dow Corning.
         2) Silpruf, General Electric.
         3) Spectrem 2, Tremco.
      g. Acceptable Low Modulus
         1) 790, Dow Corning.
         2) 890, Pecora.
         3) Spectrem 1, Tremco.

C. Silicone—Sanitary (Designation S-S):
   1. Description:
      a. ASTM C920:
         1) Type: S
         2) Grade: NS
         3) Class: 25
         4) Uses: NT, M, G, A, O
      b. Neutral or acid curing, non-staining, non-bleeding, fungicide-containing.
      c. Color: Selected by Engineer from manufacturer's full color range.

2. Acceptable Products:
   a. 786 Mildew-Resistant Silicone Sealant, The Dow Chemical Company.
   b. Sanitary 1700, General Electric Silicones.
   c. Tremsil 200 Sanitary, Tremco

D. Urethane—Traffic-Bearing (Designation U-TB): ASTM C920, Type M, Grade P:
1. Sealant containing mercury not allowed.
2. Class: 25. Joint movement range without cohesive/adhesive failure: Plus 25 percent to minus 25 percent of joint width.
3. Uses: T, M, O
4. Chemical curing, non-staining, non-bleeding.
5. Shore A Hardness: 40 minimum, when tested in accordance with ASTM C661.
6. Color: As selected by Engineer from complete range available from manufacturer.
7. Acceptable Products.
   a. NR-200, Pecora.
   b. Vulkem 245, Tremco.
   c. Sikaflex 2c/SL, Sika.
   d. SL 2 Sealant, Sonneborn Division of BASF Building Systems, Shakopee, MN.
   e. THC-900, Tremco.

2.2 ACCESSORIES

A. Joint Cleaner:
1. Chemical cleaners required by sealant manufacturer for substrates encountered, compatible with sealant backing bond breaker materials.
2. Free of substances capable of staining, corroding, or harming:
   a. Joint substrates.
   b. Adjacent nonporous surfaces.
   c. Sealant.
   d. Sealant backing.
3. Formulated to promote optimum adhesion of sealants to joint substrates.

B. Primer:
1. Dyed coating material required by sealant manufacturer for enhancing sealant adhesion to joint substrates.
2. Non-staining to joint substrate beyond the substrate surface.
3. Required for use unless not required by results of:
   a. "Manufacturer's sealant-substrate compatibility and adhesion test" described under Source Quality Control.
   b. "Field hand-pull adhesion test" under Field Quality Control.

C. Sealant Backing Bond Breaker Rod:
1. Non-staining material.
2. Compatible and non-adhering to sealant when tested in accordance with ASTM C1087.
3. Compatible with sealant, joint substrates, primers, and other sealant backing bond breakers.
4. Sealant manufacturer approved.
5. Sized and shaped to provide optimum performance and backing to sealant.
6. Preformed, compressible, resilient, non-staining, non-outgassing, non-waxing, non-extruding, cylinder-shaped plastic foam rods compliant with ASTM D1056.
7. Open Cell Polyurethane: Use not permitted unless required by sealant manufacturer.
8. Closed Cell Polyethylene:
   a. Non-absorbent to liquid water.
   b. Use in wall and ceiling joints unless otherwise required by sealant manufacturer.
9. Reticulated Polymeric: Sof®-Rod, Nomaco, Inc.
10. Unless otherwise required by sealant manufacturer, oversize rod to be larger than joint width by following minimum amounts:
    a. Open Cell Polyethylene: 50 percent.
    b. Closed Cell Polyethylene: 33 percent.
    c. Reticulated Polymeric: 25 percent.

05/03/13 PERMIT SET

D. Elastomeric Tubing Joint Filler:
   1. Neoprene, butyl, EPDM, or silicone tubing compliant with ASTM D1056.
   2. Shore A hardness of 70.
   3. Compatible with sealant, joint substrates, primers, and other sealant backing bond breakers.
   4. Use in pavement joints, unless otherwise required by sealant manufacturer.
   5. Use sealant backing bond breaker tape to separate sealant from rod.
   6. Unless otherwise required by sealant manufacturer, oversize rod to be larger than joint width by 25 percent the following minimum amounts:

E. Sealant Backing Bond Breaker Tape:
   1. Pressure sensitive polyethylene tape or tetrafluorethylene self-adhesive tape required by sealant manufacturer to suit application.
   2. Minimum Thickness of 11 mils.

F. Masking Tape: Non-staining, non-absorbent material compatible with sealants and surfaces adjacent to joints.

G. Tooling Liquids: Non-staining material approved by manufacturer to reduce adhesion of sealant to joint finishing tools.

H. Adhesives shall meet or exceed the VOC and chemical component limits of Cal-GREEN Table 5.504.4.1 Adhesive VOC Limit requirements.

I. Sealants shall meet or exceed the VOC and chemical component limits of Cal-GREEN Table 5.504.4.2 Sealant VOC Limit requirements.

2.3 MIXES

A. Comply with manufacturer's instructions.

B. Mix thoroughly with mechanical mixer without mixing air into sealants.

C. Continue mixing until sealant is uniform in color and free from streaks of unmixed materials.

PART 3 - EXECUTION

3.1 EXAMINATION

A. Examine conditions and proceed with work when substrates are ready.

B. Ensure that concrete and masonry have cured minimum of 28 days.

C. Verify that sealant backing is compatible with sealant.

D. Verify that substrate surface:
   1. Is within manufacturer's moisture content range.
   2. Complies with manufacturer's cleanliness and surface preparation requirements.

E. Joint Width:
   1. Verify joints are greater than minimum widths required by manufacturer.
   2. If joints are narrower than minimum required widths, widen narrow joints to indicated width.
   3. Do not place sealant in joints narrower than manufacturer's required minimum.

3.2 PREPARATION

A. Prepare, clean, and prime joints in accordance with manufacturer's instructions.

B. Remove loose materials and matter which might impair adhesion of primer and sealant to substrate.

C. Remove form release agents, laitance, and chemical retarders, which might impair adhesion of primer and sealant to concrete and masonry surfaces.

D. Comply with ASTM C1193.

E. Protect elements adjoining and surrounding work of this Section from damage and disfiguration.

F. Priming: Prime joint substrates as recommended by manufacturer for actual project conditions. unless priming is not required by:
   1. Apply primer to substrate areas where joint sealant is to adhere.

2. Comply with manufacturer's sequencing requirements for joint priming and sealant backing bond breaker rod installation to assure required primer application coverage and rate without placement of primer on backer rod surface to be in contact with sealant and avoid three-sided sealant adhesion.
3. Do not allow spillage and migration of primer onto surfaces not to receive primer.
4. Install sealant to primed substrates after primer has cured.

G. Masking Tape:
1. Use masking tape to prevent contact of primer and sealant with adjoining surfaces that would be permanently stained or damaged by:
   a. Contact with primer and sealant.
   b. Cleaning methods used to remove primer and sealant smears.
2. Place continuously along joint edges.
3. Apply masking tape so it does not shift in position after placement.

3.3 APPLICATION

A. General:
1. Comply with manufacturer's requirements and instructions.
2. Comply with results and recommendations from:
   a. "Manufacturer's compatibility and adhesion test" described in Source Quality Control Article.
   b. "Field hand-pull adhesion test" described in Field Quality Control article.
3. Provide compatible sealant system between dissimilar assemblies and adjacent construction.
4. Seal locations necessary to create and secure continuous air, water, and vapor enclosure even though Contract Documents may not indicate all locations; do not seal weep holes.
5. Seal to prevent migration of water, vapor, and air through joints.
6. Comply with manufacturer's required application temperature and relative humidity ranges. Consult manufacturer when sealant cannot be applied within these ranges.

B. Sealant Backing Bond Breaker:
1. Measure joint dimensions and size materials to achieve manufacturer-required width-to-depth ratios.
2. Install to achieve sealant depth and sealant contact depth no greater than distance required by manufacturer for sealant material, joint width, and joint movement range.
3. Install using blunt instrument to avoid puncturing.
4. Do not:
   a. Twist, puncture, and tear material.
   b. Leave gaps between ends of material pieces.
   c. Stretch or compress material along its length.
   d. Stretch or compress tape material along its width.
5. Install to provide optimum joint profile and in manner to provide not less than 1/4 inch sealant depth when tooled.
6. Install tape where insufficient joint depth makes use of rod not possible. Match tape width to joint width to prevent three-side adhesion. Do not wrap tape onto sides of the joint.
7. Replace backing bond breaker materials which have become wet with dry materials prior to sealant application.

C. Sealant:
1. Install sealants at same time as installation of backing bond breaker materials.
2. Do not exceed manufacturer's required:
   a. Material shelf life.
   b. Material working life.
   c. Installation time after mixing.
3. Comply with manufacturer's requirements for applying different sealant materials in direct contact with each other.
4. Use gun nozzle size to suit joint size and sealant material.
5. Install sealant with pressure-operated devices to form uniform continuous bead.
6. Use sufficient pressure to fill voids and joints full.

7. Install to adhere to both sides of joint.
8. Install to not adhere to back of joint; provide sealant backing.
9. Install sealant free of air pockets and embedded matter.
10. Recess sealant 1/8 inch from surface of pavements and horizontal surfaces.

D. Sealant Tooling:
1. Comply with manufacturer's tooling method requirements.
2. Tool sealant within manufacturer's tooling time limits.
3. Tooling liquids:
   a. Comply with manufacturer's requirements regarding use.
   b. Do not use when not permitted by manufacturer.
   c. Do not allow tooling liquids to come in contact with surfaces receiving sealant.
4. Produce smooth exposed surface.
5. Tool Sealant to be Free of:
   a. Air pockets and voids.
   b. Embedded impurities.
   c. Surface ridges, sags, and indentations.
6. Achieve full sealant contact and adhesion with substrate.
7. Form a concave tooled joint shape indicated in Section A of Figure 5 of ASTM C1193, unless otherwise indicated.
8. Remove excess sealant from surfaces adjacent to joint.
9. Allow acrylic latex sealant to achieve firm skin before paint is applied.

E. Masking Tape:
1. Remove immediately after tooling sealant and before sealant skin forms.
2. Remove without disturbing sealant.

3.4 FIELD QUALITY CONTROL

A. Field Hand-Pull Adhesion Test:
1. At field sample:
   a. Before sealant installation is commenced, test materials for indications of staining and poor adhesion to substrate.
   b. Perform after sealants have fully cured.
   c. Perform under observation of manufacturer's technical representative.
2. Subsequent to commencement of sealant installation:
   a. Perform under observation of manufacturer's technical representative.
   b. Perform minimum of 4 times prior to completion of sealant installation.
   c. Schedule tests at evenly-spaced intervals during sealant installation at discretion of sealant manufacturer.
3. Procedure:
   a. Make knife cut through sealant from side to side of joint.
   b. At joint's sides, make two cuts approximately 2 inches long meeting cut made across joint width.
   c. Place a mark on cut portion of sealant 1 inch from cut across joint width.
   d. Use fingers to grasp 2 inch piece of sealant firmly between mark and cut across joint width.
   e. Pull cut portion outward at an angle of 90 degrees from sealant face.
   f. Use a ruler to measure distance that sealant is pulled.
   g. Pull uncut sealant out of joint to distance recommended by manufacturer for testing adhesive capability, but not less than a distance equal to maximum movement capability in extension.
   h. Hold extended sealant for a minimum of 10 seconds.
   i. If adhesion is proper, sealant should tear cohesively in itself or be difficult to adhesively remove from joint substrate.
4. Summarize test results in test report. Indicate:
   a. Sealants tested.
   b. Joint substrates.
   c. Cohesive failures.

d. Adhesive failures.
e. Pull distance used.
f. Actions to correct failures and non-complying conditions.

5. In absence of noncomplying conditions, sealants which do not indicate adhesive failure from testing will be considered satisfactory.
6. Replace sealant removed from test locations by applying sealant in accordance with manufacturer's requirements for applying sealant to previously sealed joints.

3.5 CLEANING

A. Clean excess sealants and sealant smears from adjacent surfaces as application progresses; comply with sealant manufacturer's requirements and manufacturer of surface in which joints occur.

B. Repair or replace defaced or disfigured finishes caused by work of this Section and replace where installation techniques result in unsatisfactory joining of materials and unsightly conditions.

3.6 PROTECTION

A. Protect sealants from contamination until cured.

B. Protect sealant joints in horizontal surfaces from foot and vehicular traffic until cured.

3.7 SCHEDULE

A. Items Not to be Sealed:
1. Joints, perimeter, and penetrations in sound-rated assemblies. Use acoustical sealant specified with sound-rated assembly in Section 092900.
2. Weep holes.

B. Sealant Schedule:
1. Exterior Locations:
a. Wall Joints: Designation S-GP; use primer where required by manufacturer.
b. Joints and Perimeter of Penetrations in Horizontal Pedestrian and Vehicle Traffic Surfaces: Designation U-TB.
2. Interior Joints:
a. Wall and Ceiling Joints subject to Movement: Designation S-GP.
b. Wall and Ceiling Joints not subject to Movement: Designation AL.
c. Interior side of exterior openings: S-GP.
d. Floor Joints, including tile: Designation U-TB.
e. Interior Sanitary Joints; Joints Between Plumbing Fixtures and Adjoining Floor, Wall, and Ceiling Surfaces; Joints Between Back Splashes and Wall Substrates: Designation S-S.

END OF SECTION

SECTION 081100

METAL DOORS AND FRAMES

PART 1 - GENERAL

1.1 SUMMARY

A. Section Includes: Doors, frames, and door lights of hollow metal construction.

B. Related Sections:
   1. Section 081400 - Wood Doors.
   2. Section 087100 - Door Hardware.
   3. Section 088000 - Glazing.

1.2 SYSTEM DESCRIPTION

A. General:
   1. Meet or exceed ANSI/SDI 250.8 and HMMA 861, and more stringent requirements specified in this Section.
   2. Hardware Preparation:
      a. Comply with ANSI A115 Series and SDI 107, except for hardware locations.
      b. Comply with Section 087100 for hardware locations.
      c. Mortise, reinforce, drill, and tap frames and doors at factory to receive mortised and concealed hardware in accordance with templates and approved hardware schedules.
      d. Reinforce frames and doors for surface mounted hardware; drilling and tapping will be in field at time of hardware application.
      e. Comply with ANSI/SDI A250.8 and SDI 107 for thickness of hardware reinforcing.

1.3 SUBMITTALS

A. Product Data:
   1. Submit for each type of door and frame specified, including details of construction, materials, dimensions, hardware preparation, core, profiles, and finishes.
   2. Include proof that doors and frames are fabricated in accordance with SDI requirements.

B. Shop Drawings:
   1. Submit schedule indicating opening identification number, door and frame types, sheet metal thickness, dimensions, swing, label, hardware requirements, and undercuts when applicable. Use same identification numbers for openings as shown by Contract Drawings.
   2. Include elevations and details indicating door and frame types, profiles, conditions at openings, methods of anchoring, hardware locations, reinforcements for hardware, core construction, and provisions for vision panels and louvers when applicable.
   3. Clearly identify work that cannot be permanently factory assembled before shipment. Indicate locations of field splice joints and include associated details to ensure proper assembly at project site.

1.4 DELIVERY, STORAGE, AND HANDLING

A. Deliver, store, and handle products in accordance manufacturer's instructions.

B. Store in protected dry area under cover.

C. Place units on wood skids and store in manner that will prevent corrosion and damage.

D. Avoid use of non-vented plastic or canvas coverings which could trap moisture.

E. Store assemblies upright, do not stack flat. Provide space between stacked assemblies to promote air circulation.

05/03/13 PERMIT SET

PART 2 - PRODUCTS

2.1 MANUFACTURERS

A. Acceptable Manufacturers: Members of Steel Door Institute (SDI) or Hollow Metal Manufacturer's Association (HMMA).
   1. Amweld.
   2. Ceco.
   3. Curries.
   4. Pioneer.
   5. Republic.
   6. Steelcraft.

2.2 MATERIALS

A. Maximize use of recycled steel where possible.

B. Cold-Rolled Steel: ASTM A1008, commercial quality, Class 1, stretcher-leveled, matte finish.

C. Hot-Rolled Steel: ASTM A1011, commercial quality, pickled, and oiled.

D. Galvanized / Galvannealed Steel (Exterior and exterior atmosphere Locations):
   1. Sheet: ASTM A653, A60 or G60 coating designation, zinc coated by hot-dip process, commercial quality, stretcher-leveled, mill phosphatized. WCGS not permitted.
   2. Anchors and Accessories: ASTM A879, minimum Class B coating, zinc coated by electro-deposition, commercial quality, mill phosphatized.

E. Anchor Bolts, Fasteners, and Screws: Manufacturer's standard type, except cadmium or zinc plated finish. Stainless steel also acceptable.

F. Primer: Manufacturer's standard rust inhibitive primer, air-dried or baked, compatible with finish painting specified in Section 099000.

2.3 FABRICATION

A. General:
   1. Except where specified or noted otherwise, fabricate frames, door faces and edges using cold-rolled steel. Concealed stiffeners, reinforcing, and other components may be cold-rolled or hot-rolled steel at fabricator's option.
   2. Fabricate frames, doors and related components using galvanized/galvannealed steel where assemblies have exposure to exterior atmosphere.
   3. Fabricate sheet metal work neat in appearance and free from defects, warps, or buckles.
   4. Accurately form metal to required sizes and profiles.
   5. Grind and dress exposed welds smooth and flush with adjacent surfaces.
   6. Remove tool marks and surface imperfections by dressing, filling, and sanding smooth. Do not use metallic filler to conceal manufacturing defects.

B. Edge Clearances:
   1. Between doors and frames at head and jambs: 1/8 inch.
   2. Between meeting stiles at pairs of doors: 1/8 inch.
   3. Between Bottom Edge of Door and Finish Floor at Non-Label Assemblies: In accordance with HMMA 861, ANSI/SDI A250.8 except where larger undercuts are scheduled. Finish floor is defined as top surface of substrate. Where carpet or other applied surface materials are placed over floor substrate and greater than 1/2 inch thickness, provide 1/4 inch clearance.
   4. Between Bottom Edge of Door and Threshold: 1/4 inch.

2.4 FABRICATION - FRAMES

A. General Requirements:
   1. Provide frames based on door grade and model in accordance with ANSI/SDI A250.8 and HMMA 820.
   2. Welded construction required; knocked-down not acceptable.
   3. Fully face weld corners, including stops. Grind weld smooth with adjacent surfaces.

4. Fabricate exterior assemblies of 14 gage or 0.067 inch thick steel.
5. Fabricate interior assemblies of 16 gage or 0.053 inch thick steel for door openings 4'-0" or less in width, 14 gage or 0.067 inch thick steel for door openings over 4'-0" in width.
6. Welded construction required; knocked-down not acceptable. Weld joints smooth, full length of joint.
7. Corners of mitered design; stops coped and butted, or mitered.
8. Accurately cope joints of mullions, rails, and other similar tubular members; reinforce joints with concealed clips or sleeves.
9. Closed or tubular members may be fabricated of two pieces if interlocked at base of stops; visible seams or joints are not acceptable.

B. Guard Box:
1. Closed box design, 26 gage or 0.016 inch thick minimum, welded to frame.
2. Required at mortise hardware cutouts for assemblies installed within masonry walls or where assemblies will have frames grouted with mortar or similar materials at time of installation.

C. Spreader: Manufacturer's standard temporary channel or angles tack welded at bottom of jamb members.

D. Floor Anchor Clips:
1. Provide at each jamb and mullions which extend to floor.
2. In areas where concrete topping or other similar construction occurs, provide adjustable design to permit securing to depressed subfloor construction. In lieu of adjustable design, frames may extend to subfloor.

E. Jamb Anchors: Comply with SDI-111 and HMMA 820.
1. Metal Stud Wall Systems: Steel clips welded to frame, type or design compatible with stud system. Locate at top of frame, 12 inch from top, and 24 inch centers maximum intermittently, minimum 4 per jamb.
2. Previously Placed Concrete, Masonry, or Structural Steel: Tension plate and spacer design, welded to frame at approximately 24 inch centers, minimum 3 per jamb. Frames drilled and countersunk for 1/4 inch flathead anchor bolts, set below frame surface.

F. Silencers:
1. Drill or Punch Frames for Silencers. Coordinate hole size with silencers specified in Section 087100.
2. Single Interior Doors: 3 at strike jamb.
3. Pair of Interior Doors: 2 at header.
4. Weatherstripped doors: None required.

2.5 FABRICATION - DOORS

A. Flush Doors:
1. Interior Doors: ANSI/SDI Level 2 and Physical Performance Level B, Heavy Duty, Model 1 (1-3/4 inch thick, 18 gage or 0.042 inch thick face sheets, Full Flush Design).
2. Exterior Doors: ANSI/SDI Level 3 and Physical Performance Level A, Extra Heavy Duty, Model 1, 1-3/4 inch thick; 16 gage or 0.053 inch thick face sheets.
3. Option: Custom doors complying with NAAMM Standard HMMA 861 "Type A" may be used in lieu of standard doors constructed in accordance with SDI standards.
4. Core:
   a. Interior: Resin impregnated kraft paper honeycomb.
   b. Exterior: Manufacturer's standard insulated core.
5. Face sheets broken to form and meet in joint on stile edges weld and grind smooth joints on stile edges.
6. Vertical edges continuously reinforced from top to bottom with steel channels or flat bars placed immediately inside of face sheets.
7. Reinforce top and bottom edge full width of door with steel channel not less than 16 gage or 0.053 inch thick.
8. Fabricate exterior doors with top edge closed flush and fabricate bottom edge with flush closure where required for attachment of weatherstripping. Provide openings in bottom closure of exterior doors to permit escape of entrapped moisture.

05/03/13 PERMIT SET

9. Provide insulating material in void spaces for sound deadening in assemblies utilizing internal core of steel stiffeners.
10. Fill face welds and surface depressions with metallic paste filler or body putty, grind smooth and flush to unblemished finish appearance.
11. Bevel lock or latch edge 1/8 inch in 2 inches at single doors and at meeting stiles at pairs of doors.

B. Glazing Beads:
1. Minimum 18 gage or 0.042 inch thick steel, screw on type, corners butted or mitered, welded to door assembly on security side, removable on opposite side.
2. Factory install and secure loose bead with countersunk oval head screws spaced 8 inch centers maximum and within 2 inches of ends.
3. Coordinate dimensions for glazing rabbets with requirements of Section 088000.

C. Vision Openings:
1. Frame openings for sizes indicated.
2. Equip with glazing beads.

D. Astragals:
1. Full height overlapping design, applied on in-active leaf at pairs of interior label doors as necessary to meet label requirements, minimum 20 gage or 0.032 inch thick steel.
2. Full height overlapping design at pairs of exterior doors, welded on active leaf, 1-3/4 inch by 12 gage or 0.093 inch thick steel.

2.6 FINISHES

A. Ferrous and Galvanized Steel Assemblies:
1. Clean surfaces free of mil scale, rust, oil, grease, dirt, and other foreign materials.
2. Phosphatize or chemically treat surfaces before application of prime coat finish.
3. Touch-up areas where abrasions and welding have destroyed zinc coating with zinc-rich paint before application of prime coat finish.
4. Prime Coat: Manufacturer’s standard rust inhibitive primer to produce smooth and uniform coat.

PART 3 - EXECUTION

3.1 EXAMINATION

A. Examine conditions and proceed with work when substrates are ready.

3.2 INSTALLATION

A. Install hollow metal assemblies in accordance with SDI 105 and HMMA 840.

B. Set frames plumb, level, in true alignment, securely fastened to floor with expansion shields and bolts, and fastened to adjoining walls with specified jamb anchors. Remove temporary spreaders and braces.

C. Fill face of countersunk flathead frame anchors with metallic paste filler; grind smooth and flush with frame surface.

D. Install doors accurately in frames maintaining specified clearances. Install hardware in accordance with manufacturer's written instructions and associated templates. Refer to Section 087100 for hardware installation requirements.

E. Install glass in accordance with Section 088000.

3.3 ADJUSTMENTS

A. After installation of hardware, test and adjust doors for smooth operation.

END OF SECTION

05/03/13 PERMIT SET

SECTION 083100

ACCESS DOORS AND PANELS

PART 1 - GENERAL

1.1 SUMMARY

A. Requirement of Products Covered Under This Section:
   1. Furnish and install access panels as required to access plumbing, fire protection, mechanical and electrical work as necessary for operation and maintenance of concealed equipment, valves, cleanouts, controls, and other similar devices requiring access.
   2. Coordinate requirements with Divisions 21, 22, 23, and 26.

B. Related Sections:
   1. Section 087100 - Door Hardware: Keyed cylinders.
   2. Section 099000 - Paints and Coatings: Field paint finish.
   3. Division 22 – Plumbing: Coordinate access panel location.
   4. Division 23 – Heating, Ventilating, and Air Conditioning: Coordinate access panel location.
   5. Division 26 – Electrical: Coordinate access panel location.

1.2 SYSTEM DESCRIPTION

A. Design Requirements: Determine specific locations and sizes for access doors and panels needed to gain access to concealed equipment, and indicate on schedule specified under “Submittals” Article.

1.3 SUBMITTALS

A. Product Data: Submit product data for each type of access panel.

B. Shop Drawings: Include complete schedule indicating types, locations, sizes, wall and ceiling construction details, latching and locking provisions, and other pertinent data.

1.4 QUALITY ASSURANCE

A. Single Source Responsibility: Obtain materials for systems from either a single manufacturer or from manufacturer approved by systems manufacturer to ensure quality of appearance and performance.

B. Fire-Resistance Ratings: Appropriate UL or Warnock Hersey label required on fire rated assemblies.

C. Size Variations: Obtain Engineer's acceptance of manufacturer's standard size units which may vary from sizes indicated on Drawings.

D. Coordination: Furnish inserts and anchoring devices which required to be built into other work for installation of access panels. Coordinate delivery with other work to avoid delay.

1.5 DELIVERY, STORAGE, AND HANDLING

A. Deliver, store, and handle products in accordance manufacturer’s instructions.

PART 2 - PRODUCTS

2.1 MANUFACTURERS

A. Acceptable Steel Manufacturers:
   1. J. L. Industries, Bloomington, MN.
   2. Karp Associates, Inc., Maspeth, NY.
   3. Milcor Incorporated, Lima, OH.
   4. Nystrom Products Company, Minneapolis, MN.
   5. The Williams Brothers Corporation of America, Front Royal, VA

05/03/13 PERMIT SET

2.2 MATERIALS AND FABRICATION

A. Steel Assemblies: Fabricate of sheet steel complying with ASTM A1008.
   1. Fabricate with casing bead welded to perimeter of frame for assemblies installed in gypsum board surfaces.
   2. Fabricate of not less than 16 gage materials.
   3. Fabricate with exposed flange of nominal 1 inch wide around perimeter for assemblies installed in following construction:
      a. Exposed masonry or concrete.
      b. Ceramic tile.
      c. Suspended ceiling, acoustical tile.

B. Non-Rated Flush Panels: Fabricate of not less than 14 gage sheet materials. Equip with concealed spring hinges or concealed continuous piano hinge designed to open 175 degree minimum.

C. Recessed Panels:
   1. Frames:
      a. Fabricate of not less than 14 gage materials.
      b. Fabricate with casing bead welded to perimeter of frame for assemblies installed in gypsum board surfaces.
   2. Non-Rated Recessed Panels:
      a. Fabricate recessed pan of 16 gage.
      b. Factory install gypsum board flush to door surface.
      c. Equip with concealed hinges.
   3. Basis of Design: Model RDWPD, Karp Associates, Inc.
   4. Sesame KSTDW (drywall walls and ceilings), Karp.

D. Locking Devices: Provide screwdriver controlled locking device for each assembly.

2.3 FINISH

A. Steel Assemblies:
   1. Clean surfaces free of mil scale, rust, oil, grease, dirt, and other foreign materials.
   2. Phosphatize or chemically treat surfaces before application of prime coat finish.
   3. Apply rust inhibitive primer to produce uniform smooth coat at 2.0 mils minimum dry film thickness.

PART 3 - EXECUTION

3.1 EXAMINATION

A. Examine conditions and proceed with Work when substrates are ready.

B. Verify rough openings are correctly located, sized and prepared for installation.

3.2 INSTALLATION

A. Install plumb, level, square and rigidly secured in accordance with manufacturer's instructions.

B. Position for convenient access to concealed work requiring access.

3.3 ADJUSTMENTS

A. After installation, test and adjust panels and hardware for smooth operation.

END OF SECTION

05/03/13 PERMIT SET

SECTION 084126

ALL-GLASS ENTRANCE DOORS

PART 1 - GENERAL

1.1 SUMMARY

A. Section Includes: All-glass entrance doors incorporated into curtain wall system.

B. Related Sections:
   1. Section 087100 - Door Hardware: Floor closers, exit devices, keyed cylinders.

1.2 SYSTEM REQUIREMENTS

A. General: In addition to requirements shown or specified, comply with design requirements of Section 084413 – Glazed Aluminum Curtain Walls.

B. Design and Performance Requirements:
   1. Manufacturer is responsible for designing system], including anchorage to curtain wall system and necessary modifications to meet specified requirements and maintain visual design concepts.
   2. Employ registered professional engineer, licensed to practice structural engineering in jurisdiction where Project is located, to engineer each component of entrance system.
   3. Drawings are diagrammatic and do not purport to identify nor solve problems of thermal or structural movement, glazing, anchorage, or moisture disposal.
   4. Requirements shown by details are intended to establish basic dimension of units, sight lines and profiles of members.
   5. Provide concealed fastening wherever possible.
   6. Provide all-glass entrances, including necessary modifications to meet specified requirements and maintaining visual design concepts.
   7. Attachment considerations are to take into account site peculiarities and expansion and contraction movements so there is no possibility of loosening, weakening or fracturing connection between units and curtain wall or compromising the watertight integrity of the façade system.
   8. Anchors, fasteners and braces shall be structurally stressed not more than 50 percent of allowable stress when maximum loads are applied.
   9. Provide for expansion and contraction due to structural movement without detriment to appearance or performance.
   10. System shall accommodate expansion and contraction within system components due to surface temperature range of 180 degrees F without detrimental effect to system components.
   11. Assemblies shall be free from rattles, wind whistles and noise due to thermal and structural movement and wind pressure.
   12. Comply with CPSC 16 CFR 1201 and ANSI Z97.1 for safety requirements of glazing materials.

C. Interface With Adjacent Systems:
   1. Integrate design and connections with adjacent construction.
   2. Accommodate allowable tolerances and deflections for structural members in installation.

1.3 SUBMITTALS

A. Product Data:
   1. Submit product data for entrance system.
   2. Include information for factory finishes, hardware, glass, sealants, accessories and other required components.

B. Shop Drawings:
   1. Submit shop drawings created by storefront manufacturer indicating design, fabrication, and installation of systems.

05/03/13 PERMIT SET

2. Stamp shop drawings with seal and signature of professional engineer responsible for design.
3. Show anchors, joint system, expansion and contraction provisions and other components not included in manufacturer's standard data.
4. Include wall elevations, typical unit elevations and detail sections.
5. Include glazing, hardware and anchorage details.
6. Clearly indicate locations of exposed fasteners.

C. Samples:
1. Submit samples indicating quality of finish in required colors on alloys used for work, 12 inches long for extrusions and 6 inches square for sheet materials.
2. Where normal color and texture variations are expected, include additional samples to show range of such variations.
3. Submit samples for each type of glass, 12 by 12 inch size.

D. Submit following Informational Submittals:
1. Certifications specified in Quality Assurance article.
2. Qualification Data: Manufacturer's, engineer's, and installer's qualification data.
3. Manufacturer’s installation instructions.

E. Closeout Submittals:
1. Submit under provisions of Section 017800.
2. Warranty: Submit specified warranty.

1.4 QUALITY ASSURANCE

A. Engineer Qualifications: Registered professional engineer licensed to practice structural engineering in jurisdiction where Project is located, with minimum of 5 years experience in design of all-glass entrance systems.

B. Installer Qualifications: Certified in writing by system manufacturer as qualified for installation of specified systems.

C. Certifications:
1. Submit manufacturer's certification that products furnished for Project meet or exceed specified requirements.
2. Engineering certifications.

1.5 DELIVERY, STORAGE, AND HANDLING

A. Deliver, store, and handle products in accordance manufacturer’s instructions.

B. Protect finish surfaces as necessary to prevent damage.

C. Do not use adhesive papers which become firmly bonded when exposed to sun.

D. Do not leave coating residue on any surface.

E. Replace damaged units.

F. Deliver glass with manufacturer's labels intact. Labels are required to indicate glass thickness, unit location, glass strength and orientation of units in vertical position.

G. Protect glass edges and corners against chipping and cracking.

1.6 WARRANTY

A. Provide warranties in accordance with Section 017800.

B. Provide written warranty jointly signed by manufacturer, installer and Contractor warranting work to be watertight, free from defective materials and workmanship, and agreeing to replace components which fail within 5 years from date of Substantial Completion.

PART 2 - PRODUCTS

2.1 MANUFACTURERS

A. Acceptable Manufacturers:
1. Viracon

2. DormaGlas
3. Arch Aluminum and Glass LC, Tamarac, FL.
4. Blumcraft of Pittsburgh, Division of C.R. Laurence, Los Angeles, CA.
5. Virginia Glass Products Corporation, Martinsville, VA.

2.2 MATERIALS AND COMPONENTS

A. Type Clear Tempered Glass:
1. Quality: ASTM C1036, Type I transparent flat, Class 1 clear, Quality q3 glazing select.
2. Type: ASTM C1048, Kind FT fully tempered, with tongless horizontal tempering.
3. Exposed Edges: Radius, polished smooth.
4. Thickness: 3/4 inch.
5. Obscure Glass: Translucent frit applied to interior surface. See drawings for location. Basis of Design: Viracon, Simulated Sandblast V1086.

B. Framing Systems:
1. Door Fittings: Top corner patch plates, full 10 inch high rail bottom rail.
2. Profile: Square design.
3. Metal for fittings: Extruded aluminum complying with ASTM B221, alloy 6063-T5, 0.125 inch minimum wall thickness.

C. Weatherstripping: manufacturer’s system for weathertight entrance door system.

D. Fasteners:
1. Provide concealed fasteners wherever possible.
2. For exposed locations, provide Phillips flathead screws with finish matching item fastened.
3. For concealed locations, provide manufacturer's standard.

2.3 DOOR HARDWARE

INFORMATION PROVIDED IN SECTION 087100

2.4 SYSTEM FINISH

A. Fluoropolymer Coating:
1. Locations: Door patch plates and bottom rails.
2. Comply with AAMA 2605, fluorosurfactant free (FSF) formulation.
3. Resin: 70 percent polyvinylidene fluoride (PVDF).
4. Substrate: Cleaned and pre-treated.
5. Color and system to match curtain wall in Section 084413.

PART 3 - EXECUTION

3.1 EXAMINATION

A. Examine conditions and proceed with work when substrates are ready.

3.2 INSTALLATION

A. Install in accordance with manufacturer’s instructions, details and approved shop drawings.

B. Erect true to line, plumb, level, square and in proper planes with other work, free from twists, sags, waves, buckles or other objectionable defects.

C. Provide anchorage to safely resist stresses to which members will normally be subjected.

D. Anchor securely in place allowing for required movement including expansion and contraction.

E. Separate dissimilar materials at contact points, including metal in contact with masonry or concrete surfaces, with bituminous paint or preformed separators to prevent contact and corrosion.

F. Glazing: Commence glass door installation at final stage of construction to avoid damage.

G. Door Edge Clearances:
1. Between doors and frame at head and jambs: 1/8 inch.
2. At sills with thresholds: 1/4 inch.

3. At meeting edges of pairs of doors: 1/8 inch.

3.3 ADJUSTING

A. Test Door Operating Functions. Adjust closing and latching speeds and other hardware in accordance with manufacturer's instructions to ensure smooth operation.

3.4 CLEANING

A. Clean surfaces in compliance with manufacturer's recommendations; remove excess mastic, mastic smears, foreign materials and other unsightly marks.

B. Remove protective paper. Clean surfaces and polish to uniform luster. Exercise care to avoid damage of finishes.

C. Wash glass on interior and exterior to remove paint, soil, prints and foreign matter. Clean glass only with mild detergent and water following glass manufacturer's instructions. Do not use abrasive materials.

END OF SECTION

05/03/13 PERMIT SET

SECTION 084413

GLAZED ALUMINUM CURTAIN WALLS

PART 1 - GENERAL

1.1 SUMMARY

A. Section Includes:
1. Aluminum curtain wall systems, complete with reinforcing, shims, anchors, and attachment devices.
2. Glass and glazing accessories.
3. Perimeter sealants.
4. Accessories necessary to complete Work.

B. Related Sections:
1. Section 055000 - Metal Fabrications: Preparation of adjacent work to receive anchorages required for support of wall systems.
2. Section 079200 - Joint Sealants: Perimeter sealants and backup materials.
3. Section 084126 - All-Glass Entrance Doors.
4. Section 088000 - Glazing.

1.2 SYSTEM REQUIREMENTS

A. General: In addition to requirements shown or specified, comply with:
1. Applicable provisions of AAMA “Aluminum Curtain Wall Design Guide Manual” for design, materials, fabrication and installation of component parts.

B. Design Requirements:
1. Manufacturer is responsible for designing system, including anchorage to structural system and necessary modifications to meet specified requirements and maintain visual design concepts.
2. Employ registered professional engineer, licensed to practice structural engineering in jurisdiction where Project is located, to engineer each component of glazed curtain wall system.
3. Structural silicone glazed framing system for four-sided silicone glazing of glass to aluminum back-up framing.
4. System manufacturer shall provide curtainwall systems, including necessary modifications to meet specified requirements and maintaining visual design concepts.
5. Fabricate glazing systems for exterior glazing installation.
6. Perimeter conditions shall allow for installation tolerances, expansion and contraction of adjacent materials, and sealant manufacturer's recommended joint design.
7. Drawings are diagrammatic and do not purport to identify nor solve problems of thermal or structural movement, glazing, anchorage or moisture disposal.
8. Requirements shown by details are intended to establish basic dimension of unit, sight lines and profiles of members.
9. Do not assume glass, sealants, and interior finishes contribute to framing member strength, stiffness, or lateral stability.
10. Assemblies shall be free from rattles, wind whistles and noise due to thermal and structural movement and wind pressure.
11. Attachment considerations are to take into account site peculiarities and expansion and contraction movements so there is no possibility of loosening, weakening or fracturing connection between units and building structure or between units themselves.
12. Anchors, fasteners and braces shall be structurally stressed not more than 50 percent of allowable stress when maximum loads are applied.
13. Allow for expansion and contraction due to structural movement without detriment to appearance or performance.
14. System shall drain exterior face of wall, water entering joints and condensation occurring within system by drain holes and gutters of adequate size to evacuate water without infiltration to interior.

05/03/13 PERMIT SET

15. Provide concealed fastening wherever possible.
16. Metal faces are required to be visually flat under all lighting conditions, subject to acceptance of Architect.
17. Provide uniform color and profile appearance at components exposed to view.
18. Stresses placed on structural silicone sealants shall be kept within sealant manufacturer's recommended maximum.
19. Make modifications to meet field conditions and to ensure fitting of products.
20. Obtain Engineer's approval of modification.
21. Obtain Engineer's approval for connections to building elements at locations other than indicated on Drawings.
22. Accommodate building structure deflections in connections to structure.
23. Separate dissimilar metals.

C. Wind Loading:
1. Engineer typical exterior envelope to withstand 40 PSF positive and negative wind load acting normal to plane of walls or building code requirements, whichever is greater.
2. Engineer corners within 10 feet and parapet areas of exterior envelope to withstand upgraded wind requirements stipulated in ANSI 58.1, ASCE 7 and building code.

D. Thermal Requirements:
1. Thermal Movement: Provide for expansion and contraction due to structural movement and temperature changes without detriment to appearance or performance.
   a. Design for assumed temperature changes regardless of surface areas exposed to exterior and interior.
   b. Design exterior envelope to withstand movement within itself, between wall assembly and structure in deflection, warpage and racking without breakage of air or water seals.
   c. Provide joint movement capable of reacting to material temperature range of 180 degrees F.
   d. Assume entire cross section has uniform temperature.
2. For thermal design other than joint movement, design winter surface temperature shall be 99 percent dry bulb winter temperature from ASHRAE handbook.

E. Exterior Window and Curtain Wall Performance:
1. Air Infiltration of Fixed Units: Tested not to exceed 0.06 cubic foot/minute square foot in accordance with ASTM E283, at pressure differential of 6.24 PSF.
2. Water Penetration Under Static Pressure: In accordance with ASTM E331; air pressure 20 percent design wind load; 10.0 PSF minimum, no uncontrolled water penetration allowed.
3. Water Penetration Under Dynamic Pressure: In accordance with AAMA 501.1; air pressure 20 percent design wind load; 10.0 PSF minimum, no uncontrolled water penetration allowed.

F. Structural Requirements:
1. Deflection Under Uniform Loading: When tested in accordance with ASTM E330 at design pressure, maximum deflection of exterior member shall not exceed L/175 or 3/4 inch maximum for spans under 13’-6” and L/240 plus 1/4 inch for spans 13’-6” or greater.
2. Compression flanges of flexural members may be assumed to receive effective lateral bracing only from:
   a. Anchors to building structure.
   b. Horizontal glazing rails or interior trim which are in actual contact with compression flange.
3. Do not regard points of contraflexture as lateral braces or as end points of unbraced length; unbraced length is actual distance between effective lateral braces as defined above.
4. Where framing member reaction is resisted by continuous element, maximum assumed effective length of the resisting element is 4 times bearing length, but not more than 12 inches.

G. Glazing Requirements:
1. Comply with CPSC 16 CFR 1201 and ANSI Z97.1 for safety requirements of glazing materials.
2. Glass thickness, where indicated, are minimum requirements and are to be confirmed by glass manufacturer.

3. Provide glass of thickness and heat treatment (annealed, heat strengthened or fully tempered) as necessary to prevent temperature stress breakage.
4. Use 2.5 safety factor of glass to statistical probability of failure (8 lites/1000).

H. Structural Silicone Assembly Performance:
1. Ensure structural silicone has ultimate strength which provides minimum safety factor of 3 compared to applied loads.
2. Ensure allowable tension and shear stress in structural silicone does not exceed 20 psi, or less if required by sealant manufacturer or by structural silicone substrate tests. A 1/3 increase for wind and seismic load is not permitted.
3. Force per linear inch generated by 3 times applied load must be transmitted without failure of paint films, insulated glass edge seals, glass coatings, and other elements in line of stress. Dead weight of vertical glass to be carried by structural silicone.
4. Adhere structural silicone to specially prepared surfaces and verify minimum safety factor by adhesion tests.
5. Do not adhere structural silicone to mill finish aluminum surfaces.

I. Interface With Adjacent Systems:
1. Instruct other trades of proper location and position of structural connections.
2. Furnish setting drawings, diagrams, templates and installation instructions.
3. Integrate design and connections with adjacent construction.
4. Accommodate allowable tolerances and deflections for structural members in installation.

1.3 SUBMITTALS

A. Product Data:
1. Submit product data for each manufactured product.
2. Include information for factory finishes, glass, glazing sealants, perimeter sealants, accessories and other required components.

B. Shop Drawings:
1. Stamp shop drawings with seal and signature of professional engineer responsible for design.
2. Submit drawings created by curtain wall manufacturer indicating elevations, detailed design, dimensions, member profiles, joint locations, arrangement of units, member connections, and thickness of various components.
3. Show following Items:
   a. Details of special shapes.
   b. Reinforcing.
   c. Drainage details and flow diagrams.
   d. Anchorage system.
   e. Interfacing with building construction.
   f. Provisions for expansion and contraction.
4. Indicate glazing details, methods, locations of various types and thickness of glass, and internal sealant requirements.
5. Clearly indicate locations of exposed fasteners and joints for Engineer's acceptance.
6. Clearly show where and how manufacturer's system deviates from Contract Drawings and these Specifications.

C. Samples:
1. Submit samples indicating quality of finish in required colors on alloys used for work, 12 inches long for extrusions and 6 inches square for sheet materials.
2. Where normal texture or color variations are expected, include additional samples illustrating range of variation.

D. Submit following Informational Submittals:
1. Test Reports: Submit certified copies of previous tests reports by independent laboratory substantiating performance of system. Include other supportive data as necessary.
2. Support reactions design data.
3. Certifications specified in Quality Assurance article.
4. Qualification Data: Engineer's and installer's qualification data.

5. Manufacturer's installation instructions. Include detailed instructions describing each step of reglazing procedures.

E. Closeout Submittals:
1. Submit under provisions of Section 017800.
2. Warranty: Submit specified warranty.

1.4 QUALITY ASSURANCE

A. Single Source Responsibility:
1. Provide window systems that are products of a single manufacturer.
2. Glass, glazing, and perimeter sealants for curtain wall systems are required as Work of this Section for single source responsibility.

B. Engineer Qualifications: Registered professional engineer licensed to practice structural engineering in jurisdiction where Project is located, with minimum of 5 years experience in design of glazed curtain wall systems.

C. Installer Qualifications: Certified in writing by system manufacturer as qualified for specified systems.

D. Certifications:
1. Submit manufacturer's certification that products furnished for Project meet or exceed specified requirements.
2. Submit manufacturer's certification stating that installed system is in compliance with specified requirements.
3. Submit coating manufacturer's certification stating fluoropolymer coating formulation is fluorosurfactant free (FSF).
4. Engineering certifications. Include statement attesting components, including frames and glass, will withstand design wind loads and that maximum allowable deflections will not be exceeded.
5. Submit certification stating compatibility of insulating glass sealant with silicone glazing sealant.
6. Submit certification stating acceptance of installation procedures signed by glass manufacturer, sealant manufacturer, and systems manufacturer.

1.5 PREINSTALLATION CONFERENCE

A. Conduct preinstallation conference.

B. Conference Purpose and Agenda:
1. Arrange with Engineer and representatives of window and sealant manufacturer to visit Project site before beginning glazing operations to analyze site conditions, and inspect surfaces and joints to be sealed in order that recommendations may be made should adverse conditions exist.
2. Discuss following Items:
   a. Weather conditions under which work will be done.
   b. Anticipated frequency and extent of joint movement.
   c. Joint design.
   d. Glazing procedures.

1.6 DELIVERY, STORAGE, AND HANDLING

A. Deliver, store, and handle products in accordance manufacturer’s instructions.

B. Protect finished surfaces to prevent damage.

C. Do not use adhesive papers or sprayed coatings which become firmly bonded when exposed to sun.

D. Do not leave coating residue on surfaces.

E. Deliver glass units with manufacturer's labels intact on interior side of glass. Ensure labels indicate glass thickness, unit location, glass strength and orientation of units in vertical position.

F. Protect glass edges and corners to prevent chipping, cracking, and other similar damages.

1.7 PROJECT CONDITIONS

A. Ensure ambient and surface temperatures and joint conditions are suitable for installation of materials.

1.8 WARRANTY

A. Provide written warranty in form acceptable to Owner jointly signed by manufacturer, installer and Contractor warranting work to be watertight, free from deflective materials, defective workmanship, glass breakage due to defective design, and agreeing to replace components which fail within 5 years from date of Substantial Completion.

B. Warranty shall cover following:
   1. Complete watertight and airtight system installation within specified tolerances.
   2. Completed installation will remain free from rattles, wind whistles and noise due to thermal and structural movement and wind pressure.
   3. Curtain wall system is structurally sound and free from distortion.
   4. Glass and glazing gaskets will not break or "pop" from frames due to design wind, expansion or contraction movement or structural loading.
   5. Glazing sealants and gaskets will remain free from abnormal deterioration or dislocation due to sunlight, weather or oxidation.
   6. Replacement of tempered glass which break due to nickel sulfide inclusions; includes materials and labor.

C. Provide written warranty stating fluoropolymer (PVDF) coating finish will be free from fading more than 10 percent, chalking, yellowing, peeling, cracking, pitting, corroding or non-uniformity of color, or gloss deterioration beyond manufacturer's descriptive standards for 10 years from date of Substantial Completion and agreeing to promptly correct defects.

PART 2 - PRODUCTS

2.1 MANUFACTURERS

A. Acceptable Standard Curtain Wall Manufacturers:
   1. Arcadia, Vernon, CA
   2. EFCO Corporation, Monett, MO.
   3. Kawneer Company, Inc., Norcross, GA.
   4. Oldcastle Building Envelope, Santa Monica, CA.
   5. Wausau Window and Wall Systems, Wausau, WI.

B. Basis of Design System: T500 OPG3000 Silicone System, Arcadia.

2.2 FRAMING MATERIALS AND ACCESSORIES

A. Aluminum:
   1. ASTM B221, alloy 6063-T5 for extrusions; ASTM B209, alloy 5005-H16 for sheets; or other alloys and temper recommended by manufacturer appropriate for specified finish.
   2. Minimum thickness of 0.125 inch for framing members and 0.050 inch for glazing stops and similar components.
   3. Provide aluminum with 20% minimum post-consumer recycled content.

B. Internal Reinforcing:
   1. ASTM A36 for carbon steel; or ASTM B308 for structural aluminum.
   2. Shapes and sizes to suit installation.
   3. Shop coat steel components after fabrication with alkyd type zinc chromate primer complying with FS TT-P-645.

C. Inserts and Anchorage Devices:
   1. Manufacturer's standard formed or fabricated assemblies, steel or aluminum, of shapes, plates, bars or tubes.
   2. Hot-dip galvanize steel assemblies after fabrication, comply with ASTM A123, 2.0 ounce minimum coating.

D. Fasteners:
   1. Non-magnetic stainless steel or cadmium plated steel coated with yellow or silver iridescent plating, compatible with materials being fastened.
   2. Series 300 stainless steel for exposed locations. Cadmium plated steel with 0.0005 inch plating thickness and color chromate coated for concealed locations.
   3. Provide nuts or washers of design having means to prevent disengagement; deforming of fastener threads is not acceptable.
   4. Provide concealed fasteners wherever possible.

E. For exposed locations, provide countersunk flathead fasteners with finish matching item fastened.

F. Self-Drilling, Self-tapping Fasteners: Elco Dril-Flex with Stalgard Finish; no substitutions.

G. Shims: Non-staining, non-ferrous, type as recommended by system manufacturer.

H. Protective Coatings: Cold applied asphalt mastic complying with SSPC-Paint 12, compounded for 30 mil thickness for each coat; or alkyd type zinc chromate primer complying with FS TT-P-645.

I. Weep Hole Baffles: Open cell polyurethane foam sized to install at 30 percent minimum compression.

J. Internal Sealants: Types recommended by system manufacturer to remain permanently elastic, tacky, non-drying, non-migrating and weathertight.

K. Perimeter Sealants and Accessories:
   1. Type: Silicone—General Purpose complying with requirements of Section 079200.
   2. Colors: As selected by Engineer from full range of manufacturer's standard colors.
   3. Primer: Comply with requirements of Section 079200.
   4. Sealant Backing Bond Breaker Rod and Tape: Comply with requirements of Section 079200.

2.3 GLASS AND GLAZING ACCESSORIES

A. Refer to Section 088000 for Glass.

B. Setting Blocks:
   1. Type: Meet requirements of ASTM C864, preformed silicone compatible with glazing sealants and seals of insulating glass.
   2. Hardness: 80-90 Shore "A" durometer.
   3. Size: Length equal to 0.1 inch for each square foot of glass, but not less than 4 inch by width 1/16 inch less than channel by sufficient height to provide minimum edge clearance of glass.

C. Edge (Anti-Walk) Blocks:
   1. Type: Meet requirements of ASTM C864, preformed silicone compatible with glazing sealants and seals of insulating glass.
   2. Hardness: 60-70 Shore "A" durometer.
   3. Size: Minimum 4 inch length by width to support thickness of glass, allow nominal 1/8 inch clearance between edge of glass and block.

D. Spacers (Shims):
   1. Type: Meet requirements of ASTM C864, preformed silicone compatible with glazing sealants, self-adhesive one face.
   2. Hardness: 50-60 Shore "A" durometer.
   3. Size: Minimum 3 inch length by one-half height of glazing stop by thickness to suit application.

E. Continuous Spacer Gaskets: Preformed silicone, Shore A hardness and size recommended by structural glazing sealant manufacturer.

F. Glazing Sealants:
   1. Type: Silicone, one-part, neutral cure, conforming to ASTM C920, Type S, Grade NS.
   2. Colors: As selected by Engineer from full range of manufacturer's standard colors.
   3. Primer: When required by sealant manufacturer, type as recommended.
   4. Acceptable products (glass to glass weather seal):
      a. 795 Silicone Building and Glazing Sealant, Dow Corning Corporation, Midland, MI.

05/03/13 PERMIT SET

b. Silglaze II, General Electric Silicones, Waterford, NY.

5. Acceptable products (glass to metal structural adhesion):
   a. 995 Silicone Building Sealant, Dow Corning Corporation, Midland, MI.
   b. Ultraglaze SSG 4400 Silicone Structural Glazing Adhesive, General Electric Silicones, Waterford, NY.

2.4 SYSTEM FABRICATION

A. Take accurate field measurements to verify required dimensions prior to fabrication.

B. Fabricate components in accord with approved shop drawings. Fabricate system using previously tested components the meet or exceed performance requirements specified this Section. Remove burrs and ease edges. Shop fabricate to greatest extent practicable to minimize field cutting, splicing, and assembly. Disassemble only to extent necessary for shipping and handling limitations.

C. Location of exposed joints are subject to Engineer's acceptance.

D. Welding:
   1. Comply with recommendations of American Welding Society.
   2. Performed by AWS qualified welders using recommended electrodes and methods to avoid distortion and discoloration.
   3. Grind exposed welds smooth and flush with adjacent surfaces before finishing; restore mechanical finish.

E. Steel Components:
   1. Clean surfaces after fabrication and immediately prior to application of primer in accord with SSPC-SP2 or SSPC-SP3 at manufacturer's option.
   2. Apply specified shop coat primer in accord with manufacturer's instructions to provide 2.0 mil minimum dry film thickness.

F. Fabricate components true to detail and free from defects impairing appearance, strength or durability. Fabricate custom extrusions indicated and as necessary for complete installation.

G. Fabricate components to allow for accurate and rigid fit of joints and corners. Match components carefully ensuring continuity of line and design. Ensure joints and connections will be flush and weathertight. Ensure slip joints make full, tight contact and are weathertight.

H. Fabricate components true to detail and free from defects impairing appearance, strength or durability. Fabricate custom extrusions, closures, indicated and as necessary for complete installation. Include provisions for thermal-breaks.

I. Reinforce components at anchorage and support points, at joints, and at attachment points for interfacing work.

J. Provide structural reinforcing within framing members where required to maintain rigidity and accommodate design loads.

K. Provide holes or slots, deflector plates, internal flashings, and sealants to accommodate internal weep and drainage system.

L. Head and sill extrusions act as gutter and weep water to exterior; do not penetrate sections with fasteners.

M. Allow for adequate clearance around perimeter of system to enable proper installation and for thermal movement within system.

N. Separate dissimilar metals with protective coating or preformed separators to prevent contact and corrosion.

2.5 FINISH

A. Fluoropolymer Coating:
   1. Comply with AAMA 2605, fluorosurfactant free (FSF) formulation.
   2. Resin: 70 percent polyvinylidene fluoride (PVDF).
   3. Substrate: Cleaned and pre-treated.
   4. Primer:
      a. Manufacturer’s standard resin based compatible coating.

05/03/13 PERMIT SET

b. Dry Film Thickness:
1) Extrusion: Minimum 0.20 mil.
2) Coil: Minimum 0.80 mil.

5. Metallic Color coat:
a. Coating: PVDF.
b. Dry Film Thickness:
1) Coil: 0.80 mil.
2) Extrusion: 1.0 mil.

6. Clear coat:
a. Coating: PVDF.
b. Dry Film Thickness:
1) Coil: 0.50 mil.
2) Extrusion: 0.40 mil.

7. Color: Manufacturer's color as selected by Engineer.

PART 3 - EXECUTION

3.1 EXAMINATION

A. Examine conditions and proceed with work when substrates are ready.

B. Verify dimensions, tolerances, and method of attachment with other Work.

3.2 INSTALLATION

A. Install in accordance with manufacturer's instructions and applicable provisions of AAMA Aluminum Curtain Wall Design Guide Manual.

B. Align assemblies plumb and level, free of warp or twist, aligning with adjacent Work.

C. Tolerances:
1. Limit Variations from Plumb and Level:
a. 1/8 inch in 20'-0" vertically and horizontally.
b. 1/4 inch in 40'-0" either direction.
2. Limit Offsets in Theoretical End-To-End and Edge-To-Edge Alignment:
a. 1/16 inch where surfaces are flush or less than 1/2 inch out of flush and separated by not more than 2 inches.
b. 1/8 inch for surfaces separated by more than 2 inches.
3. Step In Face: 1/16 inch maximum.
4. Jog In Alignment: 1/16 inch maximum.
5. Location: 1/4 inch maximum deviation of any member at any location.
6. Tolerances are not accumulative.

D. Provide attachments and shims to permanently fasten system to building structure.

E. Anchor securely in place, allowing for required movement, including expansion and contraction.

F. Separate dissimilar materials at contract points, including metal in contact with masonry or concrete surfaces, with protective coating or preformed separators to prevent contact and corrosion.

G. Set sill members in bed of sealant. Set other members with internal sealants and baffles to provide weathertight construction.

H. Glazing:
1. Install glazing gaskets and sealants in accordance with manufacturer's instructions without exception, including surface preparations.
2. Ensure bonding surfaces are sound, clean, dry and free of contamination which would affect bonding strength.
3. Clean glass edges and surfaces in contact with glazing sealant with cleaner recommended by manufacturer.
4. Provide setting blocks, edge blocks, and spacers of proper size to support and hold glass in position independent of glazing gaskets. Comply with placement recommendations of GANA Glazing Manual.

05/03/13 PERMIT SET

5. Arrange setting blocks, edge blocks and spacers to avoid blocking water transfer inside frames.
6. Set glass properly centered with uniform bite, face clearance and edge clearance, free from twist, warp or other distortion likely to develop stress.
7. Handle and install glass in accordance with manufacturer's directions.
8. Prevent nicks, abrasion and other damage likely to develop stress on edges.
9. Do not field cut tempered or insulating glass.
10. Mask areas adjacent to joints if necessary to obtain neat sealant line.
11. Tool sealant concave and promptly remove masking tape.
12. Clean excess sealant from adjacent surfaces while in uncured stage with recommended solvent.

I. Sealants and Accessories:
1. Provide perimeter sealant and backing materials between assemblies and adjacent construction; install in accordance with requirements of Section 079200.
2. Seal locations necessary to create and secure continuous enclosure even though Drawings may not indicate all locations.
3. Seal joints to prevent migration of water vapor or air to interior of building.
4. Install double seals; exterior deterrent seal and interior vapor and air seal where curtain wall terminates against adjacent construction.

3.3 CLEANING

A. Clean surfaces in compliance with manufacturer's recommendations; remove excess mastic, mastic smears, and other foreign materials.

B. Clean metal surfaces exercising care to avoid damage.

C. Remove adhered matter and excess sealant materials.

D. Replace glass which is broken, cracked, chipped, scratched, abraded or damaged in other ways.

E. Wash glass on interior and exterior to remove paint, soil, prints and foreign matter. Clean glass only with mild detergent and water following glass manufacturer's instructions. Do not use abrasive materials.

END OF SECTION

05/03/13 PERMIT SET

SECTION 086310

ENTRY CANOPY GLAZING SYSTEM

PART 1 - GENERAL

1.1 SUMMARY

A. Section Includes:
1. Structural glass entry canopy, complete with fittings, fasteners, anchors and attachment devices.
2. Glass and glazing accessories.
3. Panel and perimeter sealants.
4. Accessories necessary to complete Work.

B. Related Sections:
1. Section 051200 - Structural Steel: AESS steel supporting structure.

1.2 SYSTEM REQUIREMENTS

A. Design Requirements:
1. Manufacturer is responsible for designing system, including anchorage to structural system and necessary modifications to meet specified requirements and maintain visual design concepts.
2. Employ registered professional engineer, licensed to practice structural engineering in jurisdiction where Project is located, to engineer each component of structural glass entry canopy system.
3. Structurally supported system using stainless steel “spider” connections supported on steel framing.
4. Laminated glass with structural silicone sealant at butt joints.

B. Performance Requirements:
1. Drawings are diagrammatic and do not purport to identify nor solve problems of thermal or structural movement, glazing, anchorage or moisture disposal.
2. Requirements shown by details are intended to establish basic dimension of unit, sight lines and profiles of members.
3. Provide structural glass entry canopy system, including necessary modifications to meet specified requirements and maintaining visual design concepts.
4. Attachment considerations need to take into account site peculiarities and expansion and contraction movements so there is no possibility of loosening, weakening or fracturing connections between units and building structure or between units themselves.
5. Anchors, fasteners and anchoring devices shall be structurally stressed not more than 50 percent of allowable stress when maximum loads are applied.
6. Provide for expansion and contraction due to structural movement without detriment to performance or system components.
7. System shall accommodate expansion and contraction within system components caused by surface temperature range of 180 degrees F without detrimental effect to system components.
8. Provide system free from rattles, wind whistles and noise due to thermal and structural movement and wind pressure.
9. Provide 1/2 inch minimum thick laminated glass or greater if necessary to withstand dead loads, live loads, and wind pressures.
10. Provide laminated glass with cast-in-place resin interlayer compatible with silicone sealants at butt joints and capable of being exposed to atmosphere without deleterious effect at exposed edges.
11. Provide system to accommodate live load deflections of floors without detrimental effect to system components.
12. Ensure installed system will not allow water through assembly.
13. Comply with CPSC 16 CFR 1201 and ANSI Z97.1 for safety requirements of glazing materials.

05/03/13 PERMIT SET

C. Interface With Adjacent Systems:
   1. Integrate design and connections with adjacent construction.
   2. Accommodate allowable tolerances and deflections for structural members in installation.

1.3 SUBMITTALS

A. Product Data:
   1. Submit product data for structural glass entry canopy system.
   2. Include information for factory finishes, hardware, glass, sealants, accessories and other required components.

B. Shop Drawings:
   1. Stamp shop drawings with seal and signature of professional engineer responsible for design.
   2. Indicate system dimensions, framed opening requirements and tolerances, anticipated load deflections, interfacing with adjacent Work, expansion and contraction joint locations and details, anchorages and attachments, field welding required, and other appropriate details.
   3. Indicate Glass Requirements:
      a. Glass type.
      b. Thicknesses.
      c. Sizes.
      d. Joint locations and sizes.
      e. Edge treatment.
      f. Water drainage
   4. Include details for glazing methods and materials.
   5. Include details for fittings and locations.

C. Samples:
   1. Submit composite samples illustrating glass, glazing materials and fittings, 12 by 12 inch size.
   2. Submit samples indicating quality of finish for fittings on alloys used for work.
   3. Where normal color and texture variations are expected, include additional samples to show range of such variations.
   4. Submit samples for each type of glass, 12 by 12 inch size with selected color interlayer.
   5. Submit samples of glazing sealants for color selections.

D. Submit following Informational Submittals:
   1. Test Reports: Submit certified copies of previous test reports substantiating performance of system. Include other supportive data as necessary.
   2. Support reactions design data.
   3. Certifications specified in Quality Assurance article.
   4. Qualification Data: Engineer's and installer's qualification data.
   5. Manufacturer's instructions.

E. Closeout Submittals:
   1. Warranty: Submit specified warranty.

1.4 QUALITY ASSURANCE

A. Engineer Qualifications: Registered professional engineer licensed to practice structural engineering in jurisdiction where Project is located, with minimum of 5 years experience in design of structural glass entry canopy systems.

B. Installer Qualifications:
   1. Minimum 3 years experience in erecting Work specified.
   2. Certified in writing by system manufacturer as qualified for installation of specified systems.

C. Certifications:
   1. Submit manufacturer's certification that products furnished for Project meet or exceed specified requirements.
   2. Engineering certifications.

05/03/13 PERMIT SET

1.5 DELIVERY, STORAGE, AND HANDLING

A. Deliver, store, and handle products in accordance manufacturer's instructions.

B. Protect finished surfaces to prevent damage. Do not use adhesive papers or sprayed coatings which become firmly bonded when exposed to sun.

C. Do not leave coating residue on any surface.

D. Deliver glass units with manufacturer's labels intact on interior side of glass. Ensure labels indicate glass type, thickness, and orientation of units in vertical position.

E. Protect glass edges and corners against chipping and cracking.

1.6 PROJECT CONDITIONS

A. Ensure ambient and surface temperatures and joint conditions are suitable for installation of materials.

1.7 WARRANTY

A. Provide written warranty in form acceptable to Owner jointly signed by manufacturer, installer and Contractor warranting work to be watertight, free from deflective materials, defective workmanship, glass breakage due to defective design, and agreeing to replace components which fail within 5 years from date of Substantial Completion.

PART 2 - PRODUCTS

2.1 MANUFACTURERS

A. Acceptable Manufacturers:
   1. C.R. Laurence, Los Angeles, CA.
   2. W&W Glass Pilkington, Nanuet, NY.
   3. Innovative Structural Glass, Inc.
   4. Paragon Architectural Products, LLC, Scottsdale, AZ.

2.2 ENTRY CANOPY MATERIALS AND COMPONENTS

A. Laminated Glass:
   1. Type: Glazing select, float, ASTM C1172, Kind LHS.
   2. Thickness: 9/16 inch minimum.
      a. Outer Ply: Clear heat strengthened glass.
      b. Interlayer: 1 layer of 0.060 inch polyvinylbutyral, clear.
      c. Ensure interlayer can be left exposed to air and weather at edges and be in contact with silicone sealant at intermediate joints without deterioration.
      d. Inner Ply: Clear heat-strengthened glass glass.
   3. Provide alternating bands of 1/4 inch ceramic frit lines (1/4 inch line, 1/4 inch clear) on entire surface of each piece of glass.
   4. Provide polished edges where exposed or where silicone sealant is used in joints.

B. Connection Fittings:
   1. Type: Spider type design.
   2. Material: Stainless steel.
   3. Bolts: Austenitic stainless steel, countersunk.
   4. Bushings: Nylatron polyamide.

C. Attachment Devices and Fasteners:
   1. Manufacturer's standard cast or fabricated stainless steel.
   2. Two- and Four-arm spider connections of shapes and sizes to suit installation.
   3. Provide associated decorative fasteners of non-magnetic stainless steel.

D. Glazing Sealants:
   1. Type: Silicone, one-part, neutral cure, conforming to ASTM C920, Type S, Grade NS.
   2. Colors: As selected by Engineer from full range of manufacturer's standard colors.
   3. Primer: When required by sealant manufacturer, type as recommended.

05/03/13 PERMIT SET

4. Acceptable Product (Glass To Glass):
   a. 999A Silicone Building and Glazing Sealant, Dow Corning Corporation, Midland, MI.
   b. Silglaze II, General Electric Silicones, Waterford, NY.

2.3 FABRICATION

A. Fabricate components and fittings in shop, ready for erection at site.

B. Fabricate components with clearances to enable installation and dynamic movement of seals and permit ease of field assembly.

C. Field fitting, cutting, drilling, tapping and other such operations will not be permitted at site, unless specifically indicated on approved shop drawings.

D. Fit and fabricate members in proper alignment with surfaces straight, true to plane, free from wave, warp, buckle or other defects.

E. Fabricate supplemental attachment devices to ensure concealment from view.

2.4 FINISH FOR FITTINGS AND ACCESSORIES

A. Stainless Steel:
   1. No. 4 satin finish conforming with NAAMM AMP503.
   2. Protect finish with factory applied adhesive backed paper covering.
   3. Bolts: Bright machine polished finish.

PART 3 - EXECUTION

3.1 EXAMINATION

A. Examine conditions and proceed with work when substrates are ready.

B. Verify dimensions, tolerances and method of attachment with other work.

3.2 INSTALLATION

A. Install in accordance with manufacturer's instructions and approved shop drawings.

B. Commence installation near final stage of construction to avoid glass damage and provide optimum sealant application environment.

C. Protect glass surface and edges during handling and glazing from welding splatter, abrasion, concrete, mortar, plaster and paint.

D. Avoid point loading or contact with hard materials. Use bushings and gaskets as necessary to prevent glass to metal contract.

E. Separate dissimilar metals by coatings to protect against galvanic action.

F. Provide adjustable supports designed to permit adjustment after glass panels have been attached to compensate for construction tolerances and inaccuracies.

G. Erect true to line, plumb, level, square and in proper planes with other work.

H. Fixed supporting connections to be drawn tightly to prevent dislodgment.

I. Erect glass panels so that failure of any panel or member of assembly will not result in collapse of remainder. Attach panels at points where corners come together by means of spider type fittings.

J. Tighten bolts in fittings to uniform torque recommended by manufacturer using calibrated torque wrenches.

K. Ensure joints between adjoining panels are not less than 1/4 inch wide.

L. Complete adjustments to assemblies and allow for expansion and movement at assembly perimeter to prevent damage due to thermal and wind movement.

M. Sealant Application:
   1. Follow sealant manufacturer's surface preparation and application instructions without exception.
   2. Ensure sealant bonding surfaces are sound, clean, dry and free of contamination.
   3. Clean glass edges and surfaces in contact with glazing sealants with cleaner recommended by manufacturer.

4. Do not apply primer to glass surfaces.
5. Prime metal components as required by sealant manufacturer's instructions.
6. Apply sealant by hand gun or pressure equipment.
7. Tool joints concave to provide smooth surface and full contact.
8. Clean excess sealant from adjacent surfaces after removing masking tape and tooling joints.

3.3 ADJUSTING

A. Replace cracked, scratched, broken, or otherwise damaged glass.

3.4 CLEANING

A. Clean surfaces in compliance with manufacturer's recommendations; remove excess mastic, mastic smears, foreign materials and other unsightly marks.

B. Remove protective paper. Clean surfaces and polish to uniform luster. Exercise care to avoid damage of finishes.

C. Wash glass on both sides to remove paint, soil, prints and foreign matter. Clean glass only with mild detergent and water following glass manufacturer's instructions. Do not use abrasive materials.

END SECTION

05/03/13 PERMIT SET

SECTION 087100

DOOR HARDWARE

PART 1 - GENERAL

1.1 RELATED DOCUMENTS

A. Drawings and general provisions of Contract, including General and Supplementary Conditions of Division 1 Specification Sections, apply to this Section.

1.2 SUMMARY

A. This Section includes items known commercially as finish or door hardware that are required for swing, sliding, and folding doors, except special types of unique hardware specified in the same sections as the doors and door frames on which they are installed.

B. This Section includes the following, but is not necessarily limited to:
   1. Door Hardware, including electric hardware.
   2. Storefront and Entrance door hardware.
   3. Power supplies for electric hardware.
   4. Low-energy door operators plus sensors and actuators.
   5. Thresholds, gasketing and weather-stripping.
   6. Door silencers or mutes.

C. Related Sections: The following sections are noted as containing requirements that relate to this Section, but may not be limited to this listing.
   1. Division 8: Section - Steel Doors and Frames.
   2. Division 8: Section - Wood Doors.
   3. Division 8: Section - Aluminum Storefront
   4. Division 28: Section - Fire/Life-Safety Systems & Security Access Systems.

1.3 REFERENCES (Use date of standard in effect as of Bid date.)

A. 2010 California Building Code, CCR, Title 24.

B. BHMA - Builders' Hardware Manufacturers Association.

C. DHI - Door and Hardware Institute.

D. NFPA - National Fire Protection Association.
   1. NFPA 80 - Fire Doors and Other Opening Protectives
   2. NFPA 105 - Smoke and Draft Control Door Assemblies

E. UL - Underwriters Laboratories.
   1. UL 10C - Fire Tests of Door Assemblies
   2. UL 305 - Panic Hardware

F. WHI - Warnock Hersey Incorporated

G. SDI - Steel Door Institute

1.4 SUBMITTALS & SUBSTITUTIONS

A. General: Submit in accordance with Conditions of the Contract and Division 1 Specification sections.

B. Submit product data (catalog cuts) including manufacturers' technical product information for each item of door hardware, installation instructions, maintenance of operating parts and finish, and other information necessary to show compliance with requirements.

C. Submit six (6) copies of schedule organized vertically into “Hardware Sets” with index of doors and headings, indicating complete designations of every item required for each door or opening. Include following information:
   1. Include a Cover Sheet with;
      a. Job Name, location, telephone number.
      b. Architects name, location and telephone number.
      c. Contractors name, location, telephone number and job number.
      d. Suppliers name, location, telephone number and job number.
      e. Hardware consultant's name, location and telephone number.
   2. Job Index information included;
      a. Numerical door number index including; door number, hardware heading number and page number.
      b. Complete keying information (referred to DHI hand-book "Keying Systems and Nomenclature"). Provision should be made in the schedule to provide keying information when available; if it is not available at the time the preliminary schedule is submitted.
      c. Manufacturers' names and abbreviations for all materials.
      d. Explanation of abbreviations, symbols, and codes used in the schedule.
      e. Mounting locations for hardware.
      f. Clarification statements or questions.
      g. Catalog cuts and manufacturer’s technical data and instructions.
   3. Vertical schedule format sample:

Heading Number 1 (Hardware group or set number – HW -1)						
			(a) 1 Single Door #1 - Exterior from Corridor 101		(b)90°	(c) RH
				(d) 3' 0"x7' 0" x 1-3/4" x (e) 20 Minute (f) WD x HM		
(g) 1	(h)	(i) ea		(j) Hinges - (k) 5BB1HW 4.5 x 4.5 NRP (l) ½ TMS	(m) 626	(n) IVE
2	6AA	1 ea		Lockset - ND50PD x RHO x RH x 10-025 x JTMS	626	SCH

(a) - Single or pair with opening number and location. (b) - Degree of opening (c) - Hand of door(s) (d) - Door and frame dimensions and door thickness. (e) - Label requirements if any. (f) - Door by frame material. (g) - (Optional) Hardware item line #. (h) - Keyset Symbol. (i) - Quantity. (j) - Product description. (k) - Product Number. (l) - Fastenings and other pertinent information. (m) - Hardware finish codes per ANSI A156.18. (n) - Manufacture abbreviation.

D. Make substitution requests in accordance with Division 1. Substitution requests must be made prior to bid date. Include product data and indicate benefit to the project. Furnish samples of any proposed substitution.

E. Wiring Diagrams: Provide product data and wiring and riser diagrams for all electrical products listed in the Hardware Schedule portion of this section.

F. Keying Schedule: Submit separate detailed schedule indicating clearly how the Owner's final instructions on keying of locks has been fulfilled.

G. Templates for doors, frames, and other work specified to be factory prepared for the installation of door hardware. Check shop drawings of other work to confirm that adequate provisions are made for locating and installing door hardware to comply with indicated requirements.

H. Furnish as-built/as-installed schedule with close-out documents, including keying schedule and transcript, wiring/riser diagrams, manufacturers’ installation and adjustment and maintenance information.

05/03/13 PERMIT SET

I. Fire Door Assembly Testing: Submit a written record of each fire door assembly to the Owner to be made available to the Authority Having Jurisdiction (AHJ) for future building inspections.

J. LEED Certification Points: Submit information and certifications necessary to achieve maximum points for LEED certification; coordinate and cooperate with Owner and Engineer in providing information necessary for required LEED rating.

1.5 QUALITY ASSURANCE

A. Obtain each type of hardware (latch and lock sets, hinges, closers, exit devices, etc.) from a single manufacturer.

B. Supplier Qualifications: A recognized architectural door hardware supplier, with warehousing facilities in the project's vicinity, that has a record of successful in-service performance for supplying door hardware similar in quantity, type, and quality to that indicated for this project and that employs an experienced architectural hardware consultant (AHC) who is available to Owner, Engineer, and Contractor, at reasonable times during the course of the Work, for consultation.
   1. Responsible for detailing, scheduling and ordering of finish hardware.
   2. Meet with Owner to finalize keying requirements and to obtain final instructions in writing.
   3. Stock parts for products supplied and are capable of repairing and replacing hardware items found defective within warranty periods.

C. Hardware Installer: Company specializing in the installation of commercial door hardware with five years documented experience.

D. Fire-Rated Openings: Provide door hardware for fire-rated openings that complies with NFPA Standard No. 80 and requirements of authorities having jurisdiction. Provide only items of door hardware that are listed and tested by UL or Warnock Hersey for given type/size opening and degree of label. Provide proper latching hardware, door closers, approved-bearing hinges and seals whether listed in the Hardware Schedule or not.
   1. Where emergency exit devices are required on fire-rated doors, (with supplementary marking on doors' UL labels indicating "Fire Door to be Equipped with Fire Exit Hardware") provide UL label on exit devices indicating "Fire Exit Hardware".

E. Exit Doors: Operable from inside with single motion without the use of a key or special knowledge or effort.

1.6 DELIVERY, STORAGE AND HANDLING

A. Coordinate delivery of packaged hardware items to the appropriate locations (shop or field) for installation.

B. Hardware items shall be individually packaged in manufacturers' original containers, complete with proper fasteners. Clearly mark packages on outside to indicate contents and locations in hardware schedule and in work.

C. Provide locked storage area for hardware, protect from moisture, sunlight, paint, chemicals, etc.

D. Inventory door hardware jointly with representatives of hardware supplier and hardware installer until each is satisfied that count is correct.

1.7 WARRANTY

A. Provide warranties of respective manufacturers' regular terms of sale from day of final acceptance as follows:
   1. Locksets: Seven (7) years.
   2. Electronic Locks: One (1) year.
   3. Closers: Ten (10) years, except electronic closers shall be two (2) years.
   4. Exit devices: Three (3) years.
   5. All other hardware: Two (2) years.

05/03/13 PERMIT SET

1.8 MAINTENANCE

A. Maintenance Tools and Instructions: Furnish a complete set of specialized tools and maintenance instructions as needed for Owner's continued adjustment, maintenance, and removal and replacement of door hardware.

1.9 PRE-INSTALLATION CONFERENCE

A. Convene a pre-installation conference at least one week prior to beginning work of this section.

B. Attendance: Engineer, Construction Manager, Contractor, Security Contractor, Hardware Supplier, Installer, and Project Inspector.

C. Agenda: Review hardware schedule, products, installation procedures and coordination required with related work.

PART 2 - PRODUCTS

2.1 MANUFACTURERS

	Item	Manufacturer	Acceptable Substitutes
A.	Hinges	Ives	Hager, Stanley, McKinney
B.	Locks, Latches & Cylinders	Schlage	Or Approved Equal
C.	Exit Devices	Von Duprin	Or Approved Equal
D.	Closers	LCN	Or Approved Equal
E.	Push, Pulls & Protection Plates	Ives	Trimco, BBW, DCI
F.	Flush Bolts	Ives	Trimco, BBW, DCI
G.	Dust Proof Strikes	Ives	Trimco, BBW, DCI
H.	Coordinators	Ives	Trimco, BBW, DCI
I.	Stops	Ives	Trimco, BBW, DCI
J.	Overhead Stops	Glynn-Johnson	Or Approved Equal
K.	Thresholds	National Guard	Pemko, Zero
L.	Seals & Bottoms	National Guard	Pemko, Zero

2.2 MATERIALS

A. Hinges: Exterior out-swinging door butts shall be non-ferrous material and shall have stainless steel hinge pins. All doors to have non-rising pins.
   1. Hinges shall be sized in accordance with the following:
      a. Height:
         1) Doors up to 41" wide: 4-1/2" inches.
         2) Doors 42" to 48" wide: 5 inches.
      b. Width: Sufficient to clear frame and trim when door swings 180 degrees.
      c. Number of Hinges: Furnish 3 hinges per leaf to 7'-5" in height. Add one for each additional 2 feet in height.
   2. Furnish non-removable pins (NRP) at all exterior out-swing doors and interior key lock doors with reverse bevels.

B. Floor Closers: Shall be equipped with compression springs, cam and roller operating mechanism and a one piece spindle-cam for maximum operating performance and longevity.

C. Extra Heavy duty Commercial Mortise Locks: Schlage “L” Series as scheduled with “06” Style Lever and “A” Style Rose.

1. Locksets to comply with ANSI A156.13, Series 1000, Operational Grade 1 and Security Grade 1 with all standard trims. Locksets shall also comply with UL10C Positive Pressure requirements
2. Lock case shall be manufactured with heavy 12 gauge steel with fully wrapped design. Lock cases with exposed edges are not acceptable. Lock case shall be multi-functional allowing transformation to a different function without opening lock case.
3. Latchbolt shall have ¾" throw and be non-handed, field reversible without opening the lock case. Solid latchbolts and / or plastic anti-friction devices are not acceptable.
4. The deadbolt, when used, shall be 1" throw stainless steel with a ¾" internal engagement when fully extended.
5. All trim shall be through-bolted with the spring cages supporting the trim attached to the lock cases to prevent torquing.
6. Levers to have independent rotation in both directions. Exterior lever assembly to be one-piece design attached by threaded bushing. Interior lever assembly shall be attached by screwless shank
7. Thru-bolt lever assemblies through the door for positive interlock. Locks using a through the door spindle for attachment are not acceptable. Spindles shall be independent, designed to "break-away" at a maximum of 75psi torque.
8. Hand of lock chassis to be changeable by simply moving one screw from one side to the case to the other and pulling and reversing the latchbolt.
9. Cylinders to be secured by a cast stainless steel, dual retainer. Locks utilizing screws and / or stamped retainers are not acceptable.

D. Exit devices: Von Duprin as scheduled.
1. Provide certificate by independent testing laboratory that device has completed over 1,000,000 cycles and can still meet ANSI/BHMA A156.3 - 2001 standards.
2. All internal parts shall be of cold-rolled steel with zinc dichromate coating.
3. Mechanism case shall have an average thickness of .140".
4. Compression spring engineering.
5. Non-handed basic device design with center case interchangeable with all functions.
6. All devices shall have quiet return fluid dampeners.
7. All latchbolts shall be deadlocking with ¾" throw and have a self-lubricating coating to reduce friction and wear.
8. Device shall bear UL label for fire and or panic as may be required.
9. All surface strikes shall be roller type and utilize a plate underneath to prevent movement.
10. All Exit Devices to be sex-bolted to the doors.
11. Panic Hardware shall comply with CBC Section 1008.1.9 and shall be mounted between 30" and 44" above the finished floor surface. The unlatching force shall not exceed 15 lbs. applied in the direction of travel.

E. Closers: LCN as scheduled. Place closers inside building, stairs, room, etc.
1. Door closer cylinders shall be of high strength cast iron construction with double heat treated pinion shaft to provide low wear operating capabilities of internal parts throughout the life of the installation. All door closers shall be tested to ANSI/BHMA A156.4 test requirements by a BHMA certified testing laboratory. A written certification showing successful completion of a minimum of 10,000,000 cycles must be provided.
2. All door closers shall be fully hydraulic and have full rack and pinion action with a shaft diameter of a minimum of 11/16 inch and piston diameter of 1 inch to ensure longevity and durability under all closer applications.
3. All parallel arm closers shall incorporate one piece solid forged steel arms with bronze bushings. 1-9/16" steel stud shoulder bolts, shall be incorporated in regular arms, hold-open arms, arms with hold open and stop built in. All other closers to have forged steel main arms for strength, durability, and aesthetics for versatility of trim accommodation, high strength and long life.
4. Closers shall be installed to permit doors to swing 180 degrees.

5. All closers shall utilize a stable fluid withstanding temperature range of 120 degrees F. to -30 degrees F. without requiring seasonal adjustment of closer speed to properly close the door.
6. Provide the manufactures drop plates, brackets and spacers as required at narrow head rails and special frame conditions. NO wood plates or spacers will be allowed.
7. Maximum effort to operate closers shall not exceed 5 lbs., such pull or push effort being applied at right angles to hinged doors. Compensating devices or automatic door operators may be utilized to meet the above standards. When fire doors are required, the maximum effort to operate the closer may be increased but shall not exceed 15 lbs. when specifically approved by fire marshal. All closers shall be adjusted to operate with the minimum amount of opening force and still close and latch the door. These forces do not apply to the force required to retract latch bolts or disengage other devices that hold the door in a closed position. Door shall take at least 3 seconds to move from an open position of 70 degrees to a point of 3 inches from the latch jamb. Reference CBC Sections 1133B.2.1, 1133B.2.5 & 1133B2.5.1.
8. Provide sex-bolted or through bolt mounting for all door closers.

F. Flush Bolts & Dust Proof Strikes: Automatic Flush Bolts shall be of the low operating force design. Utilize the top bolt only model for interior doors where applicable and as permitted by testing procedures.
1. Manual flush bolts only permitted on storage or mechanical openings as scheduled.
2. Provide dust proof strikes at openings using bottom bolts.

G. Door Stops:
1. Unless otherwise noted in Hardware Sets, provide wall type with appropriate fasteners. Where wall type cannot be used, provide floor type. If neither can be used, provide overhead type.
2. Do not install floor stops more than four (4) inches from the face of the wall or partition (CBC Section 1133B.8.6).
3. Overhead stops shall be made of stainless steel and non-plastic mechanisms and finished metal end caps. Field-changeable hold-open, friction and stop-only functions.

H. Protection Plates: Fabricate either kick, armor, or mop plates with four beveled edges. Provide kick plates 10" high and 2" LDW. Sizes of armor and mop plates shall be listed in the Hardware Schedule. Furnish with machine or wood screws of bronze or stainless to match other hardware.

I. Thresholds: As Scheduled and per details.
1. Thresholds shall not exceed 1/2" in height, with a beveled surface of 1:2 maximum slope.
2. Set thresholds in a full bed of butyl-rubber or polyisobutylene mastic sealant complying with requirements in Division 7 “Thermal and Moisture Protection”.
3. Use ¼” fasteners, red-head flat-head sleeve anchors (SS/FHSL).
4. Thresholds shall comply with CBC Section 1133B.2.4.1.

J. Seals: Provide silicone gasket at all rated and exterior doors.
1. Fire-rated Doors, Resilient Seals: UL10C Classified, Category “J” listed seals complying with NFPA 80 & NFPA 252 Standards. Coordinate with selected door manufacturers' and selected frame manufacturers' requirements.
2. Fire-rated Doors, Intumescent Seals: Furnished by selected door manufacturer. Category “G” furnish fire-labeled opening assembly complete and in full compliance with NFPA 252. Where required, intumescent seals vary in requirement by door type and door manufacture -- careful coordination required.
3. Smoke & Draft Control Doors, Provide Category “H” listed seals complying with NFPA 105 for use on “S” labeled Positive Pressure door assemblies.

K. Door Shoes & Door Top Caps: Provide door shoes at all exterior wood doors and top caps at all exterior out-swing doors.

L. Silencers: Furnish silencers for interior hollow metal frames, 3 for single doors, 2 for pairs of doors. Omit where sound or light seals occurs, or for fire-resistive-rated door assemblies.

05/03/13 PERMIT SET

2.3 KEYING

A. Furnish a masterkey system as directed by the owner or engineer.

B. A detailed keying schedule is to be prepared by the owner and/or engineer in consultation with a representative of the lock manufacturer. Each keyed cylinder on every keyed lock is to be listed separately showing the door #, key group (in BHMA terminology), cylinder type, finish and location on the door.

C. Establish a new masterkey system for this project as directed by the keying schedule.

D. Furnish all cylinders in the Schlage Full Size Interchangable Core (FSIC). Pack change keys independently (PKI)

E. Furnish construction keying for doors requiring locking during construction.

F. Furnish mechanical keys as follows:
   1. Furnish 2 cut change keys for each different change key code.
   2. Furnish 1 uncut key blank for each change key code.
   3. Furnish 6 cut masterkeys for each different masterkey set.
   4. Furnish 3 uncut key blanks for each masterkey set.
   5. Furnish 2 cut control keys cut to the top masterkey for permanent I/C cylinders.
   6. Furnish 1 cut control key cut to each SKD combination.

G. Furnish Schlage Padlocks and the cylinders to tie them into the masterkey system for gates, storage boxes, utility valve security, roof hatches and roll-up doors keyed as directed in the keying schedule.

2.4 FINISHES

A. Generally to be satin chrome US26D (626 on bronze and 652 on steel) unless otherwise noted.

B. Furnish push plates, pull plates and kick or armor plates in satin stainless steel US32D (630) unless other wise noted.

C. Door closers shall be powder-coated to match other hardware, unless otherwise noted.

D. Aluminum items to be finished anodized aluminum except thresholds which can be furnished as standard mill finish.

2.5 FASTENERS

A. Screws for strikes, face plates and similar items shall be flat head, countersunk type, provide machine screws for metal and standard wood screws for wood.

B. Screws for butt hinges shall be flathead, countersunk, full-thread type.

C. Fastening of closer bases or closer shoes to doors shall be by means of sex bolts and spray painted to match closer finish.

D. Provide expansion anchors for attaching hardware items to concrete or masonry.

E. All exposed fasteners shall have a phillips head.

F. Finish of exposed screws to match surface finish of hardware or other adjacent work.

G. All Exit Devices and Lock Protectors shall be fastened to the door by the means of sex bolts or through bolts.

PART 3 - EXECUTION

3.1 INSPECTION

A. Verify that doors and frames are square and plumb and ready to receive work and dimensions are as instructed by the manufacturer.

B. Beginning of installation means acceptance of existing conditions.

C. Fire-Rated Door Assembly Inspection: Upon completion of the installation, all fire door assemblies shall be inspected to confirm proper operation of the closing device and latching device and that

05/03/13 PERMIT SET

only the manufacturer's furnished fasteners are used for installation and that it meets all criteria of a fire door assembly per NFPA 80 (Standard for Fire Doors and Other Opening Protectives) 2007 Edition. A written record shall be maintained and transmitted to the Owner to be made available to the Authority Having Jurisdiction (AHJ). The inspection of the swinging fire doors shall be performed by a certified FDAI (Fire Door Assembly Inspector) with knowledge and understanding of the operating components of the type of door being subjected to the inspection. The record shall list each fire door assembly throughout the project and include each door number, an itemized list of hardware set components at each door opening, and each door location in the facility.

3.2 INSTALLATION

A. Install hardware in accordance with manufacturer's instructions and requirements of DHI.

B. Use the templates provided by hardware item manufacturer.

C. Mounting heights for hardware shall be as recommended by the Door and Hardware Institute. Operating hardware will to be located between 30" and 44" AFF.

D. Set units level, plumb and true to line and location. Adjust and reinforce the attachment substrate as necessary for proper installation and operation.

E. Drill and countersink units that are not factory-prepared for anchorage fasteners. Space fasteners and anchors in accordance with industry standards.

F. Set thresholds for exterior doors in full bed of butyl-rubber sealant.

G. If hand of door is changed during construction, make necessary changes in hardware at no additional cost.

H. Hardware Installer shall coordinate with security contractor to route cable to connect electrified locks, panic hardware and fire exit hardware to power transfers or electric hinges at the time these items are installed so as to avoid disassembly and reinstallation of hardware.

I. Hardware Installer shall also be present with the security contractor when the power is turned on for the testing of the electronic hardware applications. Installer shall make adjustments to solenoids, latches, vertical rods and closers to insure proper and secure operation.

J. All wiring for electro-mechanical hardware mounted on the door shall be connected through the power transfer and terminated in the interface junction box specified for in the Electrical Section.

K. Conductors shall be minimum 18 gage stranded, multicolored. A minimum 12 in. loop of conductors shall be coiled in the interface junction box. Each conductor shall be permanently marked with its function.

L. If a power supply is specified in the hardware sets, all conductors shall be terminated in the power supply. Make all connections required for proper operation between the power supply and the electro-mechanical hardware. Provide the proper size conductors as specified in the manufacturer's technical documentation.

3.3 ADJUST AND CLEAN

A. Adjust and check each operating item of hardware and each door, to ensure proper operation or function of every unit. Replace units which cannot be adjusted to operate freely and smoothly as intended for the application made.

B. Clean adjacent surface soiled by hardware installation.

C. Final Adjustment: Wherever hardware installation is made more than one month prior to acceptance or occupancy, return to that work area and make final check and adjustment of all hardware items in such space or area. Clean operating items as necessary to restore proper function and finish of hardware and doors. Adjust door control devices to compensate for final operation of heating and ventilating equipment.

D. Instruct Owner's Personnel in proper adjustment and maintenance of hardware finishes, during the final adjustment of hardware.

05/03/13 PERMIT SET

E. Continued Maintenance Service: Approximately six months after the completion of the project, the Contractor accompanied by the Architectural Hardware Consultant, shall return to the project and re-adjust every item of hardware to restore proper functions of doors and hardware. Consult with and instruct Owner's personnel in recommended additions to the maintenance procedures. Replace hardware items which have deteriorated or failed due to faulty design, materials or installation of hardware units. Prepare a written report of current and predictable problems (of substantial nature) in the performance of the hardware.

3.4 HARDWARE LOCATIONS

A. Conform to CCR, Title 24, Part 2; and ADAAG; and the drawings for access-compliant positioning requirements for the disabled.

3.5 FIELD QUALITY CONTROL

A. Architectural Hardware Consultant (AHC) to inspect installation and certify that hardware and it's installation have been furnished and installed in accordance with manufacturer's instructions and as specified herein.

3.6 SCHEDULE

A. The items listed in the following schedule shall conform to the requirements of the foregoing specifications.

B. The Door Schedule on the Drawings indicates which hardware set is used with each door.

Manufacturers Abbreviations (Mfr.)

BLU	=	Blumcraft	Glass Door Exit Hardware
GLY	=	Glynn-Johnson Corporation	Overhead Door Stops
IVE	=	Ives	Hinges, Bolts, Coordinators, Dust Proof Strikes, Push Pull & Kick Plates, Door Stops & Silencers
LCN	=	LCN	Door Closers
NGP	=	National Guard Products	Thresholds, Gasketing & Weather-stripping
PEM	=	Pemko	Astragal
SCH	=	Schlage Lock Company	Locks, Latches & Cylinders
VON	=	Von Duprin	Exit Devices

SPEXTRA: 31223

HARDWARE GROUP NO. 01

2	EA	PIVOT SET	7215 SET	626	IVE
2	EA	EXIT DEVICE	H-100-A	630	BLU
2	EA	MORTISE CYLINDER	20-061-ICX	626	SCH
2	EA	FSIC CORE	23-030	626	SCH
2	EA	OH STOP	90S	630	GLY
2	EA	CONCEALED CLOSER	2030 OP ST-2211	689	LCN
1	EA	THRESHOLD	653 MS/LA	AL	NGP

HARDWARE GROUP NO. 02

RE-USE EXISTING DOORS, FRAMES, & HARDWARE

05/03/13 PERMIT SET

HARDWARE GROUP NO. 03

6	EA	HW HINGE	5BB1HW 4.5 X 4.5 NRP	630	IVE
1	EA	PANIC HARDWARE	LD-9849-EO	630	VON
1	EA	PANIC HARDWARE	LD-9849-L-996-06	630	VON
1	EA	RIM CYLINDER	20-057-ICX	626	SCH
1	EA	FSIC CORE	23-030	626	SCH
2	EA	OH STOP & HOLDER	100H	630	GLY
2	EA	SURFACE CLOSER	4040XP EDA	689	LCN
1	SET	SEALS	5050B	BRN	NGP
1	EA	ASTRAGAL	136P	600	NGP
2	EA	DOOR SWEEP	90100CNB	AL	PEM
1	EA	THRESHOLD	653 MS/LA	AL	NGP

HARDWARE GROUP NO. 04

1	EA	CYLINDER OR PADLOCK	VERFY TYPE WITH DOOR MFR	626	SCH
1	EA	FSIC CORE	23-030	626	SCH
			BALANCE OF HARDWARE BY DOOR MANUFACTURER		

HARDWARE GROUP NO. 05

3	EA	HINGE	5BB1 4.5 X 4.5 NRP	630	IVE
1	EA	DBL CYL DEADBOLT	B662T	626	SCH
2	EA	FSIC CORE	23-030	626	SCH
1	SET	SEALS	5050B	BRN	NGP
1	EA	DOOR BOTTOM	312VA	CL	NGP
1	EA	THRESHOLD	653 MS/LA	AL	NGP

HARDWARE GROUP NO. 06

3	EA	HINGE	5BB1 4.5 X 4.5 NRP	630	IVE
1	EA	STOREROOM LOCK	LV9080T 06A	630	SCH
1	EA	FSIC CORE	23-030	626	SCH
3	EA	SILENCER	SR64	GRY	IVE

HARDWARE GROUP NO. 07 NOT USED

1	EA	DBL CYL DEADBOLT	B662T	626	SCH
2	EA	FSIC CORE	23-030	626	SCH
			RE-USE BALANCE OF DOOR, FRAME & HARDWARE		

05/03/13 PERMIT SET

HARDWARE GROUP NO. 08

3	EA	HW HINGE	5BB1HW 4.5 X 4.5	630	IVE
1	EA	STOREROOM LOCK	LV9080T 06A	630	SCH
1	EA	FSIC CORE	23-030	626	SCH
1	EA	SURFACE CLOSER	4040XP	689	LCN
1	EA	FLOOR STOP/HOLDER	FS42	626	IVE
1	SET	SEALS	5050B	BRN	NGP
1	EA	DOOR BOTTOM	312VA	CL	NGP
1	EA	THRESHOLD	653 MS/LA	AL	NGP

HARDWARE GROUP NO. 09

1	EA	STOREROOM LOCK	ND80TD RHO	626	SCH
1	EA	FSIC CORE	23-030	626	SCH
1	EA	SURFACE CLOSER	4040XP EDA	689	LCN
1	SET	SEALS	5050B	BRN	NGP
			RE-USE BALANCE OF DOOR, FRAME & HARDWARE		

HARDWARE GROUP NO. 10

3	EA	HINGE	5BB1 4.5 X 4.5 NRP	630	IVE
1	EA	CLASSROOM DEAD LOCK	L463T	626	SCH
1	EA	FSIC CORE	23-030	626	SCH
1	EA	PUSH PLATE	8200 4" X 16"	630	IVE
1	EA	PULL PLATE	8302 8" 4" X 16"	630	IVE
1	EA	SURFACE CLOSER	4040XP	689	LCN
1	EA	KICK PLATE	8400 10" X 2" LDW B4E	630	IVE
1	EA	WALL STOP	WS407CCV	630	IVE
1	SET	SEALS	5050B	BRN	NGP

HARDWARE GROUP NO. 11

6	EA	HW HINGE	5BB1HW NRP (FIELD VERIFY EXIST. SIZE0	630	IVE
1	SET	CONST LATCHING BOLT	FB61P	630	IVE
1	EA	DUST PROOF STRIKE	DP1	626	IVE
1	EA	VESTIBULE LOCK	LV9060T 06A	630	SCH
1	EA	FSIC CORE	23-030	626	SCH
1	EA	PERMANENT CORE	DEALER SUPPLIED	626	SCH
1	EA	THRESHOLD	653 MS/LA	AL	NGP

05/03/13 PERMIT SET

HARDWARE GROUP NO. 12

6	EA	HINGE	5PB1 4.5 X 4.5 NRP	630	IVE
1	SET	CONST LATCHING BOLT	FB51T	630	IVE
1	EA	ROLLER LATCH	RL32	626	IVE
1	EA	CYL X TURN DEAD LOCK	L460T L583-363	626	SCH
1	EA	FSIC CORE	23-030	626	SCH

END OF SECTION

05/03/13 PERMIT SET

SECTION 087500

WINDOW HARDWARE

PART 1 - GENERAL

1.1 SUMMARY

A. Section Includes: Miscellaneous hardware to operate existing clerestory windows.

1.2 DESIGN REQUIREMENTS

A. Operation:
1. Operate existing clerestory windows from floor by use of ropes, pulleys and tie-offs.
2. Pulling cord opens window.
3. Cord ring on end of cord attaches to hook to hold window open.
4. Releasing cord closes window.

B. Materials Include:
1. 1/4 inch nylon sash cord.
2. Marine grade stainless steel sail boat type pulleys.
3. Cord ring.
4. Tie-off hooks.

1.3 SUBMITTALS

A. Product Data: Include data for each product.

B. Shop Drawings: Indicate materials, dimensions, cord runs, connection, details, operating procedures, and attachment provisions.

C. Samples: Submit 12 inches of sash cord and one of each type hardware item.

1.4 DELIVERY, STORAGE, AND HANDLING

A. Deliver, store, and handle products in accordance manufacturer's instructions.

B. Provide protective coverings of suitable material. Take special precautions at corners.

1.5 WARRANTY

A. Furnish warranty against defects in material for 10 years. Include material and labor to repair or replace defective materials.

PART 2 - PRODUCTS

2.1 MATERIALS

A. Sash Cord:
1. #8 SPOT 1/4" X 100' COTTON SASH CORD
2. High tenacity nylon core adds extra strength and reduces stretch
3. Coating provides chemical, weather and heat resistance.
4. Color: White.
5. Core: Nylon.
6. Diameter: 1/4 inch.

B. Marine Grade Sail Boat Pulleys:
1. Marine grade stainless steel sail boat type pulleys.
2. Sized for 1/4 inch sash cord without fouling.
3. U—hooks for attaching to substrate while allowing pulley to swivel.

C. Cord Ring: Round Ring
1. Stainless steel (316 Stainless Steel) Round Ring .
2. Termination for rope.
3. 1/8 inch by 1 inch diameter.

05/03/13 PERMIT SET

D. Hook:
   1. Stainless steel wall hook.
   2. Cord ring connects to hook to hold window open.
   3. Hook points down when attached to substrate.

2.2 ACCESSORIES

A. Fasteners:
   1. Type recommended by manufacturer for item being attached.
   2. Stainless steel material.
   3. Countertop: 3/4-inch.

PART 3 - EXECUTION

3.1 EXAMINATION

A. Examine conditions and proceed with work when substrates are ready.

3.2 INSTALLATION

A. Install in accordance with manufacturer's instructions and approved Shop Drawings.

B. Install units for easy, non-fouling operation of rope and pulley system.

END OF SECTION

05/03/13 PERMIT SET

SECTION 088000

GLAZING

PART 1 - GENERAL

1.1 SUMMARY

A. Section Includes:
   1. Replacement glass in existing windows.
   2. Glass for hollow metal doors.
   3. Glass for aluminum curtain walls.
   4. Associated glazing sealants and accessories.

B. Related Sections:
   1. Section 084126 – All-Glass Entrance Doors.
   2. Section 084413 - Glazed Aluminum Curtain Walls.
   3. Section 088300 - Mirrors.

1.2 SYSTEM REQUIREMENTS

A. General: In addition to requirements shown or specified, comply with design requirements of Section 084413.

B. Design Requirements:
   1. Provide continuity of building enclosure to maintain continuous air and vapor barrier throughout glazed assembly from glass pane to heel bead of sealant.
   2. Employ registered professional engineer, licensed to practice structural engineering, to engineer each component of glass and glazing system.

C. Performance Requirements: Provide thickness of glass units to withstand specified wind loads.

D. Glazing Requirements:
   1. Comply with CPSC 16 CFR 1201 and ANSI Z97.1 for safety requirements of glazing materials.
   2. Glass thickness, where indicated, are minimum requirements and are to be confirmed by glass manufacturer.
   3. Provide glass of thickness and heat treatment (annealed, heat strengthened or fully tempered) as necessary to prevent temperature stress breakage.
   4. Use 2.5 safety factor of glass to statistical probability of failure (8 lites/1000).
   5. Provide glass complying with ASTM E1300.
   6. Obtain safety glazing products permanently marked with certification label of the Safety Glazing Certification Council or another certification agency acceptable to authorities having jurisdiction.

1.3 SUBMITTALS

A. Product Data: Manufacturer's product data for each type of glass and glazing material specified, including glazing accessories and glazing sealants.

B. Shop Drawings:
   1. Sections and details of glass and glazing materials installation at framing members including head, mullions, transoms, jambs and sills.
   2. Stamp shop drawings with seal and signature of professional engineer responsible for design for glass in curtain walls.

C. Samples: 12 inches by 12 inches in size illustrating color of insulating glass units.

D. Submit following Informational Submittals:
   1. Test Reports:
      a. Glazing sealant indicating substrate adhesion.
      b. Glazing sealant compatibility.
      c. Glazing sealant manufacturer's recommendations.
   2. Certifications specified in Quality Assurance article.

05/03/13 PERMIT SET

3. Qualification Data: Engineer's and installer's qualification data.
4. Manufacturer's instructions.

E. Closeout Submittals:
1. Submit under provisions of Section 017800.
2. Warranty: Submit specified warranty.

1.4 QUALITY ASSURANCE

A. Single Source Responsibility: Glass of each type to be produced by same manufacturer.

B. Engineer Qualifications: Registered professional engineer licensed to practice structural engineering, with minimum of 5 years experience in design of glass and glazing.

C. Installer Qualifications: Acceptable to manufacturer with documented experience on at least 5 projects of similar nature in past 5 years.

D. Regulatory Requirements:
1. Fabricate glass to comply with ASTM C1036, ASTM C1048, and ANSI Z97.1.
2. Perform work in accordance with GANA Glazing Manual and GANA Sealant Manual for glazing installation methods.

E. Certifications:
1. Manufacturer's letter certifying glass and glazing materials compatibility.
2. Manufacturer's letter certifying that sealed insulating glass units meet or exceed specification.
3. Engineering certifications.

1.5 PRE-INSTALLATION CONFERENCE

A. Coordinate with curtain wall.

1.6 DELIVERY, STORAGE, AND HANDLING

A. Deliver, store, and handle products in accordance manufacturer’s instructions.

1.7 PROJECT CONDITIONS

A. Environmental Requirements:
1. Perform glazing when ambient temperature is above 40 degrees F.
2. Perform glazing on dry surfaces only.

1.8 WARRANTY

A. Manufacturer's standard 10 year warranty on hermetically sealed insulating glass units.

PART 2 - PRODUCTS

2.1 GLASS MATERIALS

A. Clear Annealed Replacement Glass:
1. Quality: Glazing select, float, complying with ASTM C1036, Type I, Class 1, Quality q3.
2. Type: Annealed.
3. Thickness: Match existing for replacement for broken and cracked glass in existing windows.

B. Tempered Clear Glass:
1. Quality: Glazing select, float, complying with ASTM C1036, Type I, Class 1, Quality q3.
2. Type: Tempered, complying with ASTM C1048, Kind FT fully tempered.
3. Thickness: 1/4 inch.

C. Uncoated Insulating Curtain Wall Glass Units:
1. Quality: Double glazed, hermetically sealed around perimeter with continuous metal spacer filled with moisture absorbing desiccant per ASTM E2190, adhered to glass lights with:
   a. Primary Seal: Polyisobutylene.
   b. Secondary Seal: Silicone two-part.

2. Total thickness: 1 inch.
   a. Outer Light:
      1) Quality: Glazing select, float, complying with ASTM C1036.
      2) Type: Annealed; Heat-strengthened, complying with ASTM C1048, Kind HS, heat strengthened where required by heat load; tempered, complying with ASTM C1048, Kind FT fully tempered where required by code for safety glazing.
      3) Thickness: 1/4 inch.
      4) Color: Ultra-clear, low iron type.
   b. Inner Light:
      1) Quality: Glazing select, float, complying with ASTM C1036.
      2) Type: Annealed; Heat-strengthened, complying with ASTM C1048, Kind HS, heat strengthened where required by heat load; tempered, complying with ASTM C1048, Kind FT fully tempered where required by code for safety glazing.
      3) Thickness: 1/4 inch.
      4) Color: Ultra-clear, low iron type.
   c. Air Space: 1/2 inch dehydrated air space.
   d. Obscure Glass: Translucent Frit applied to #2 surface. Locate at indicated in drawings.
3. Provide glass capable of being in contact with silicone sealants to ensure tenacious glass to silicone to aluminum bond.
4. Furnish insulating glass with edge sealant which is compatible with silicone.
5. Performance Criteria:
   a. Visible Light Transmittance: 84 percent.
   b. Shading Coefficient: 0.94
   c. Winter U-Value : 0.47
   d. Summer U-Value : 0.47
   e. Visible Outdoor Reflectance: 15%
   f. Visible Indoor Reflectance: 15%
6. Product: (Basis of Design)
   a. Viracon Uncoated Insulating Glass with Starphire.
   b. Obscure Glass: Viracon Simulated Sandblast V1086.

2.2 GLAZING ACCESSORIES

A. Glazing Tapes for Doors:
   1. Material: Preformed butyl or closed cell PVC foam with integral spacing device and containing paper release.
   2. Hardness: 10-15 Shore A durometer.
   3. Size: Continuous corner to corner.
   4. Acceptable Products:
      a. CRL Norton Brand Glazing Tapes.
      b. Pre-Shimmed 440 Tape, Tremco, Inc., Beachwood, OH.
      c. Norseal V-980, Saint Gobain Performance Plastics, Granville, NY.

2.3 GLAZING SEALANTS

A. Silicone Sealant: Refer to Section 084413.

B. Adhesives and sealants shall meet or exceed the VOC and chemical component limits of SCAQMD Rule 1168, Cal-GREEN Table 5.504.4.1 Adhesive VOC Limit, and Cal-GREEN Table 5.504.4.2 Sealant VOC Limit requirements.

2.4 GLASS FABRICATION

A. Accurately size glass to fit openings allowing clearances following recommendations of "Glazing Manual" published by Glass Association of North America (GANA).

B. Cut glass clean and carefully. Nicks and damaged edges will not be accepted. Replace glass with damaged edges.

C. Heat Treatment:

1. Ensure heat-strengthened and tempered glass is examined by glass manufacturer to detect and discard lights which exceed GANA and industry standard tolerances for bow.
2. Where strengthening process results in essentially parallel ripples or waves, maximum allowable deviation from flatness at any peak-to-valley is 0.003 inch.
3. Where bow tolerance and wave tolerance differ, stricter requirement governs.

D. Insulating Glass:
1. Fabricate insulated glass with double edge seals.
2. Provide continuous (including corners) primary seal between glass and desiccant filled spacer fabricated from extruded polyisobutylene.
3. Provide secondary seals completely covering spacer without voids or gaps and continuously bonded to both panes of glass.
4. Provide General Electric IGS 3204 or Dow Corning 982 secondary seals for units which will be attached to frames with silicone sealant.
5. Verify thickness of secondary seal for silicone supported units for structural adequacy by testing.
6. Ensure edge seal is capable of transferring at least 3 times force per linear inch produced by design pressure acting on outdoor glass alone or on indoor glass alone.

PART 3 - EXECUTION

3.1 EXAMINATION

A. Examine conditions and proceed with work when substrates are ready.

B. Verify that openings for glazing are correctly sized and within tolerances.

C. Verify that glazing channel surfaces or recesses are clear, free of burrs, obstructions, irregularities, and glass is free of edge damage or imperfections.

D. Examine existing windows and replace cracked and broken glass.

3.2 PREPARATION

A. Clean contact surfaces with solvent and wipe dry.

B. Seal porous glazing channels or recesses with substrate compatible primer or sealer.

C. Prime surfaces scheduled to receive sealant, if required by sealant manufacturer.

D. Verify that materials used for cleaning edges of sealed insulating units are compatible with sealants and components and will not damage or cause deterioration of the integrity of the sealed insulating unit.

3.3 INSTALLATION

A. Install glass units in accordance with manufacturer's instructions. Ensure weep and drainage holes are not blocked by sealants or setting blocks.

B. Dry Method (Tape and Tape):
1. Cut glazing tape to length and install against permanent stop, projecting 1/16 inch above sight line.
2. Place setting blocks at 1/4 points with edge blocks no more than 6 inches from corners.
3. Rest glass on setting blocks and push for full contact and adhesion at perimeter.
4. Place glazing tape on free perimeter of glass in same manner described above.
5. Install removable stop, avoid tape displacement, exert pressure on tape for full contact.
6. Knife trim excess or protruding tape.

C. Tempered Glass:
1. Do not cut, seam, nip or abrade tempered glass.
2. Install in windows and sidelights where required by code.

D. Replace broken and cracked glass in existing windows using clear glass and glazing methods to match existing.

3.4 PROTECTION

A. Protect finished Work.

B. After installation, mark glass pane with an "X" by using removable plastic tape or paste.

3.5 CLEANING

A. Remove excess glazing materials from finished surfaces.
B. Remove labels after work is completed.
C. Wash and polish both faces not more than 7 days prior to Owner's acceptance of work.
D. Comply with glass manufacturer's recommendations for final cleaning.

END OF SECTION

05/03/13 PERMIT SET

SECTION 088300

MIRRORS

PART 1 - GENERAL

1.1 SUBMITTALS

A. Product Data: Submit product data for each item.

B. Shop Drawings:
   1. Indicate fabrication and installation details not shown on manufacturer's literature.
   2. Indicate sizes, locations, number of sections, method of mounting, and when applicable, mounting heights.

C. Submit Informational Submittal: Manufacturer's instructions.

D. Closeout Submittals:
   1. Warranty: Submit specified warranty.

1.2 DELIVERY, STORAGE, AND HANDLING

A. Deliver, store, and handle products in accordance manufacturer’s instructions.

1.3 WARRANTY

A. Provide warranty in accordance with Section 017800.

B. Provide written warranty signed by mirror manufacturer agreeing to replace mirrors which develop black edge or silver deterioration within 5 years from date of Substantial Completion.

PART 2 - PRODUCTS

2.1 MATERIALS

A. Mirror Glass:
   1. Quality: ASTM C1036, Type I transparent flat, Class 1 clear, Quality q2 mirror.
   2. Type: Annealed
   3. Provide mirrors, free from objectionable wave, with safety glass backing complying with CPSC 16 CFR Part 1201, Category II and ANSI Z97.1 glazing standards for mirrors extending to within 18 inches of floor and other similar hazardous locations.
   4. Thickness: 1/4 inch.
   5. Size: One piece units, sizes indicated on Drawings.
   6. Edges: Square and polished.
   7. Reflective Coating: Manufacturer's standard silver coating followed by electrolytic deposited copper coating and separate coat of protective paint.

B. Mirror Adhesive:
   1. Type: Mix of asphaltic bitumens, fibers and mineral spirits formulated to protect mirror silvering.
   2. Acceptable Products:
      a. 7HR4 Mirror-Tac, Pecora Corporation, Harleysville, PA.
      b. Mirror Mastic, Palmer Products Corporation, Louisville, KY.

C. Primers/Sealers: Types recommended by adhesive manufacturer.
   1. Use primers that comply with Cal-GREEN Table 5.504.4.3 for VOC Content Limits for Architectural Coatings.

D. Adhesives & Sealants:
   1. Adhesives shall meet the VOC and chemical component limits of Cal-GREEN Table 5.504.4.1 Adhesive VOC Limit requirements.
   2. Sealants shall meet the VOC and chemical component limits of Cal-GREEN Table 5.504.4.2 Sealant VOC Limit requirements.

05/03/13 PERMIT SET

PART 3 - EXECUTION

3.1 EXAMINATION

A. Examine conditions and proceed with work when substrates are ready.

3.2 PREPARATION

A. Prime or seal back of mirrors and surfaces to receive mirrors as recommended by adhesive manufacturer.

B. Ensure surfaces to receive mirrors mounted with clips are decorated and painted as scheduled prior to installation of mirrors.

3.3 INSTALLATION

A. Adhesive Mounting:
   1. Apply adhesive to back of mirror in accordance with manufacturer's instructions allowing approximately 60 percent coverage when pressed into place.
   2. Press mirror firmly to bond with mounting surface. Allow ventilation space between mirror and substrate; do not seal edges.
   3. Provide temporary support of mirror until adhesive has set.

3.4 CLEANING

A. Remove labels, temporary supports, and protective cover after Work is completed.

B. Clean, wash and polish surfaces following manufacturer's recommendations.

END OF SECTION

05/03/13 PERMIT SET

SECTION 092900

GYPSUM BOARD

PART 1 - GENERAL

1.1 SUMMARY

A. Section Includes:
   1. Gypsum board walls and ceilings.
   2. Mold resistant gypsum board for toilet rooms.
   3. Metal framing.

1.2 DEFINITIONS

A. Wall: A vertical building element used to enclose or separate spaces. Walls include fixed partitions.

1.3 SYSTEM DESCRIPTION

A. Design Requirements: Contractor: Responsible for designing metal framing used to comply with performance requirements, including anchorage to structural system and necessary modifications to meet specified requirements and maintain visual design concepts.

B. Performance Requirements:
   1. Interior Suspended Gypsum Board Ceilings, Soffits, and Bulkheads: Design and install to provide deflection of not more than 1/360 of distance between supports.
   2. Interior Metal Stud/Gypsum Board Assemblies: Design and install to withstand lateral loading (air pressure) of 5 PSF with deflection limit not more than 1/240 of partition height.
   3. Interior Metal Stud/Gypsum Board Assemblies at Locations with Ceramic Tile or Other Hard Surface Finishes: Design and install to withstand lateral loading (air pressure) with deflection limit not more than L/360 of partition height.
   4. Where documents indicate a stud size, size shall be considered minimum. Increase gage to meet minimum performance requirements.
   5. Accommodate building structure deflections in connections to structure.

1.4 SUBMITTALS

A. Product Data:
   1. Submit product data for:
      a. Framing members selected based on span and performance loading for this Project.
      b. Control joints and locations.
      c. Ceiling suspension system.
   2. Include data to indicate framing member materials, product criteria, section properties, load charts, and limitations.
   3. Include information for factory finishes.

B. Submit following Informational Submittals:
   1. Certifications specified in Quality Assurance article.
   2. Manufacturer's instructions. Include applicable temperature and humidity ranges, special procedures, and perimeter conditions requiring special attention.

1.5 QUALITY ASSURANCE

A. Single Source Responsibility: Except where specified otherwise, obtain gypsum board products, trim, joint treatment, and accessories from single manufacturer or from manufacturers recommended by prime manufacturer of gypsum board products.

B. Certifications: Submit manufacturer's certification that products furnished for Project meet or exceed specified requirements.

05/03/13 PERMIT SET

1.6 DELIVERY, STORAGE, AND HANDLING

A. Storage and Protection:
   1. Store in dry ventilated space off ground.
   2. Protect materials from surface contamination, soiling, corrosion, construction traffic, and damage.
   3. Support on level platform and fully protect from weather and direct sunlight exposure.
   4. Store and support gypsum board in flat stacks to prevent sagging.
   5. Protect materials to keep them dry. Remove wet gypsum board from Project site.
   6. Protect gypsum board panels to prevent damage to edges, ends, and surfaces.
   7. Do not bend or damage metal trim.

1.7 PROJECT CONDITIONS

A. Environmental Requirements: Comply with more restrictive of ASTM C840, or manufacturer's written requirements under which products can be installed.
   1. Maintain minimum uniform 50 degrees F temperature in building for 48 hours before and continuously until applied joint treatment and bonding adhesives are thoroughly dry.
   2. Do not allow ambient temperature to exceed 95 degrees F.
   3. Provide ventilation to remove moisture in excess of that required for drying of joint treatment materials after its application. Avoid drafts during dry, hot weather to prevent too rapid drying.

PART 2 - PRODUCTS

2.1 FRAMING MATERIALS

A. General:
   1. Maximize use of recycled steel content with minimum of 60 percent.
   2. Studs, runners, and furring channels complying with ASTM C645.
   3. Provide with galvanized coating complying with ASTM A653, G40 thickness; rolled channels used in ceilings may be finished with manufacturer's standard rust inhibitive paint.

B. Steel Stud Framing Systems:
   1. Non-load-bearing roll formed galvanized steel.
   2. Wall studs: Channel-shaped design with punched web, manufacturer's standard return flange lip.
   3. Wall Stud Runners: Channel type members, with 1-1/4 inch flanges, and same sheet metal thickness as wall studs.
   4. Extended Leg Ceiling Runners: Channel type members, with 2 inch flanges, and same sheet metal thickness as wall studs.
   5. Bracing Members: Same size as studs.
   6. Wall Studs:
      a. Type 25:
         1) Return flange lip minimum dimension: 3/16 inches.
         2) Flange width minimum dimension: 1-1/4 inches.
         3) Uncoated sheet steel thickness: 0.0179 inches.
      b. Type 22:
         1) Return flange lip minimum dimension: 3/16 inches.
         2) Flange width minimum dimension: 1-1/4 inches.
         3) Uncoated sheet steel thickness: 0.0270 inches.
      c. Type 20:
         1) Return flange lip minimum dimension: 3/16 inches.
         2) Flange width minimum dimension: 1-1/4 inches.
         3) Uncoated sheet steel thickness: 0.0329 inches.

C. Furring Channels: Hat-shape, 7/8 inch high, 26 gage uncoated metal thickness.

D. Ceiling Framing - Channel and Cross Furring System:
   1. Comply with ASTM C754.

2. Main Runner Channels:
   a. Cold-rolled or hot-rolled steel.
   b. Size: 1-1/2 inch minimum.
   c. Weight: 0.45 pounds per foot, minimum.
3. Furring Anchorages: 16 gage thick galvanized wire ties, or wire-type clips.

E. Ceiling Framing - Proprietary Direct Hung Suspension System:
1. At Contractor's option, provide factory fabricated, proprietary system in lieu of channel and cross furring framing system.
2. Provide interlocking cold-rolled sheet steel grid complying with ASTM C635, "Heavy Duty" structural classification.
3. Acceptable Products and Manufacturers:
   a. 640 Drywall Furring System, Chicago Metallic, Chicago, IL.
   b. DFR-Series, Worthington Steel, Malvern, PA.
   c. Rigid X, USG Interiors, Inc., Chicago, IL.

F. Ceiling Attachment Devices:
1. General:
   a. Size devices for 5 times load imposed by completed system as determined in accordance with ASTM E488.
   b. Powder-actuated fasteners in concrete: Size devices for 10 times load imposed by completed system as determined in accordance with ASTM E1190.
2. Hanger Anchorage Devices: Screws, clips, bolts, inserts or other devices applicable to indicated method of structural anchorage for ceiling hangers and whose suitability for use intended has been proven by certified test data.
3. Hangers: Comply with requirements of ASTM C754 for maximum ceiling area and loads to be supported.

2.2 GYPSUM BOARD PRODUCTS

A. Acceptable Manufacturers:
1. Certainteed
2. G-P Gypsum Corporation
3. National Gypsum Company.
4. United States Gypsum Company.

B. Gypsum Board:
1. Maximize use of recycled or synthetic gypsum with minimum of 10 percent.
2. Use recycled newsprint including post-consumer waste for facing paper.
3. Comply with ASTM C1396.
4. Maximum available lengths to minimize end-to-end butt joints, square cut ends, tapered edge.
5. Thickness: 5/8 inch, except where indicated otherwise. Multi-layer 1/4 inch thick boards acceptable at curved surfaces.

C. Moisture- and Mold-Resistant Type: With moisture- and mold-resistant core and surfaces.
1. Comply with ASTM C1396.
2. Core: Mold and moisture resistant gypsum core, 5/8 inch.
3. Surface paper: 100% recycled content moisture/mold/mildew resistant paper on front, back, and long edges.
4. Maximum available lengths to minimize end-to-end butt joints, square cut ends, tapered edge.
5. Locations: Toilet Rooms.
6. Mold/Mildew Resistance: 10 when tested in accordance with ASTM D3273 Standard Test Method for Resistance to Growth of Mold on the Surface of Interior Coatings in an Environmental Chamber.
7. Product and Manufacturer:
   a. XP Wallboard, National Gypsum Company.
   b. Proroc® Moisture And Mold Resistant With M2tech, Certainteed
   c. Sheetrock Brand Mold Tough, USG.

2.3 METAL TRIM

A. General:
1. Comply with ASTM C1047.
2. Material: Zinc alloy or galvanized steel.
3. Uncoated sheet metal thickness: 26 gage minimum.
4. Flanges designed for concealment in joint compound, flange width to suit installation requirements.

B. Corner Beads at Straight Surfaces:
1. Cornerbead, Clinch-On Products, Mounds View, MN.
2. Wallboard Corner Bead, National Gypsum Company, Charlotte, NC.
3. 100 Series Dur-A-Bead, United States Gypsum Company, Chicago, IL.

C. Edge Trim Beads:
1. L-Bead and U-Bead, Clinch-On Products, Mounds View, MN.
2. Number 100 and 200 Wallboard Casing, National Gypsum Company, Charlotte, NC.
3. 200 Series, United States Gypsum Company, Chicago, IL.

D. Control Joints:
1. V-Shaped slot.
2. Acceptable Products and Manufacturers:
   a. E-Z Strip Expansion Joint, National Gypsum Company, Charlotte, NC.
   b. 093, United States Gypsum Company, Chicago, IL.

2.4 JOINT TREATMENT AND ADHESIVE MATERIALS

A. Joint Compound:
1. Comply with ASTM C475.
2. Board manufacturer's standard ready-mixed joint compounds low-VOC joint compounds with no detectable amounts of crystalline silica based on NIOSH Method 7500.
3. Compounds specifically manufactured for topping coats are not permitted for first coat on metal trim and taping.
4. Mixing:
   a. Mix compounds in strict accordance with manufacturer's directions.
   b. Mix only enough at one time to be used during recommended pot life of compound.

B. Joint Reinforcement Tape for Gypsum Board: Paper reinforcing tape complying with ASTM C475.

C. Adhesives and sealants shall meet or exceed the VOC and chemical component limits of Cal-GREEN Table 5.504.4.1 Adhesive VOC Limit, and Cal-GREEN Table 5.504.4.2 Sealant VOC Limit requirements.

2.5 SURFACING MATERIAL

A. Primer/Surfacer:
1. Flat latex basecoat for use on surfaces located in areas of intense lighting and indicated to receive a Level 4 finish. Basecoat is in addition to primer and finish coating specified in Section 099000.
2. Products: Subject to compliance with requirements, provide one of the following products:
   a. “Builders Solution System Interior Latex Primer/Surfacer”, A63W100; Sherwin Williams.
   b. “SHEETROCK First Coat”; USG Corporation.

2.6 ACCESSORIES

A. General: Provide auxiliary materials for gypsum board construction that comply with referenced standards and recommendations of gypsum board manufacturer.

B. Backer Plates:
1. Type: 16 gage uncoated metal thickness steel sheet, galvanized in accordance with ASTM A653, G60.
2. Length: Sufficient to extend to nearest studs beyond maximum dimension of attached item and engage fasteners from attached item; span minimum 3 studs.

3. Height: 6 inch minimum or higher where required to accommodate item being fastened.
4. When manufacturer of attached item has more rigorous mounting plate requirements, comply with manufacturer's requirements.

C. Fasteners:
1. Fasteners for Metal Framing:
a. Provide fasteners of type, material, size, corrosion resistance, holding power, and other properties required to fasten steel framing and furring members securely to substrates involved.
b. Comply with the gypsum board manufacturer requirements for indicated applications.
2. Gypsum Board Fasteners:
a. Self-drilling, self-tapping, bugle head screws conforming to ASTM C1002, length to suit application.
b. Type S screws for 0.0329 to 0.0179 inches; 21 to 26 gage thick metal framing and furring.
c. Type S-12 screws for 0.1046 to 0.0359 inches; 12 to 20 gage thick metal framing and furring.
d. Type G screws for gypsum board to gypsum board.

D. Touch-Up Primer for Galvanized Surfaces: SSPC Paint 20.

PART 3 - EXECUTION

3.1 EXAMINATION

A. Examine conditions and proceed with work when substrates are ready.

B. Verify rough-in utilities and blocking are in proper position.

3.2 PREPARATION

A. Items Which Require Backer Plates or Blocking:
1. Coordinate sizes and locations.
2. Install additional studs for attachment of backer plates and blocking in required locations to receive surface mounted accessories as indicated or as required by accessory manufacturer.
3. Elimination of backer plates and blocking is not permitted.
4. Direct attachment of items to studs is not permitted.

3.3 FRAMING INSTALLATION

A. General:
1. Install in accordance with manufacturer's printed instructions, except for more stringent requirements of these specifications.
2. Install units plumb, level, square, and free from warp and twist while maintaining dimensional tolerances and alignment with surrounding construction.
3. Installation Tolerances:
a. Ceilings: Install suspension systems that are level to within 1/8 inch in 12 feet measured lengthwise on each member that will receive finishes and transversely between parallel members that will receive finishes.
b. Partitions:
1) Maximum variation from true position: 1/8 inch.
2) Maximum variation of any member from plane: 1/8 inch in 10-0", non-cumulative.
4. Control and Expansion Joints:
a. Do not bridge building control and expansion joints with metal framing systems.
b. Install independent framing on each side of joints.

B. Framing:
1. Install in accordance with ASTM C754 and with requirements of ASTM C840 that apply to framing installation, except for more stringent requirements of manufacturer or these Specifications.

05/03/13 PERMIT SET

2. Suspended Ceilings:
   a. Install channel and cross-furring in accordance with ASTM C754.
   b. Install proprietary systems in accordance with ASTM C636.
   c. Coordinate location of hangers and framing with other construction above ceiling line.
   d. Install ceiling framing independent of walls, columns, and above ceiling non-structural construction.
   e. Install free from contact with insulation and other objects within ceiling plenum that are not part of supporting structural or ceiling suspension system.
   f. Offset hangers only where required to miss obstructions; resist resulting horizontal forces by bracing, or other means.
   g. Where width of ducts and other construction within ceiling plenum produces interference with location of hangers required to support standard suspension system members:
      1) Install supplemental suspension members and hangers in form of trapezes or equivalent devices.
      2) Size supplemental suspension members and hangers to support ceiling loads within performance limits established by referenced standards.
   h. Do not connect or suspend steel framing from pipes, ducts, and conduit.
   i. For proprietary grids, provide attachments and hangers from structural support above, spaced on a grid of 24 by 48 inches.
   j. Do not attach hangers to steel deck tabs or directly to metal roof deck. Provide supplementary framing to span between structural framing members when structural framing members are spaced more than 48 inches apart.
   k. Reinforce openings in framing which interrupt main runners, furring channels, and bracing. Extend reinforcing minimum of 24 inches past each end of each opening.
   l. Proprietary direct hung framing: Tie direct to suspension; interconnect components in accordance with framing system manufacturer's instructions.
   m. Space main runners at maximum 48 inches on center, unless otherwise indicated.
   n. Space furring channels at maximum 16 inches on center, unless otherwise indicated.
   o. Provide additional framing to fulfill structural requirements and for support at recessed fixtures and similar items.
   p. Laterally brace entire suspension system.
   q. Provide cross and vertical bracing with additional framing to fulfill structural seismic requirements for exterior soffits.
3. Studs and Runners:
   a. Stud Spacing: 16 inches on center, unless otherwise indicated.
   b. Runner Tracks: Provide continuous tracks sized to match studs.
   c. Where walls are indicated to extend to overhead surfaces (ceilings, deck construction, and structural elements), to prevent deflection transfer of structural loads or movements to walls provide either:
      1) Insert studs into runner tracks with minimum 1/2 inch gap between end of stud and inside surface of top and bottom runner. Maintain minimum of 1/2 inch engagement between end of stud and end of legs of top and bottom runners.
      2) Slip joint between walls and structure using top runner nested within 3 inch long segment of extended leg ceiling runner positioned at stud spacing and fastened to overhead surface. Do not fasten top runner to extended leg ceiling runner.
   d. Brace stud framing rigid which is not clad on both sides with gypsum board. Fasten horizontal stud or 1-1/2 inch wide 20 gage galvanized steel straps vertically spaced no more than 36 inches apart with top strap no more than 6 inches from top of wall.
   e. Horizontally align openings in stud webs.
   f. Use full length studs vertically positioned between runner tracks.
   g. Minimum Jamb Stud Framing at Door Openings:
      1) Walls laterally braced by ceiling framing or structure at 9'-0" above finish floor:
         a) Single Doors not Larger than 3'-6" by 9'-0" and not Weighing more than 275 Pounds: 2 Type 25 studs or 1 Type 20 stud.
         b) Paired Doors not Larger than 3'-6" by 9'-0" per leaf and not Weighing more than 275 Pounds per Leaf: 2 Type 20 studs or 1 Type 18 stud.

05/03/13 PERMIT SET

2) Walls Laterally Braced by Ceiling Framing or Structure at 12'-0" above Finish Floor:
   a) Single Doors not Larger than 3'-6" by 9'-0" and not Weighing More than 275 Pounds: 2 Type 20 studs or 1 Type 18 stud.
   b) Paired doors not larger than 3'-6" by 9'-0" per leaf and not weighing more than 275 Pounds per leaf: 2 Type 18 studs.
3) At welded frames with fixed anchor clips, secure studs to jamb anchors clips with not less than two self tapping screws per clip.
4) Provide wall framing above door openings to match wall framing adjoining the opening.
5) Provide one additional stud not more than 6 inches from jamb studs.

h. Minimum Sidelight Framing:
   1) Provide 2 Type 25 studs at each jamb or provide 1 Type 20 stud at each jamb.
   2) Provide wall framing above and below window and wall openings with wall framing to match wall framing adjoining the opening.
   3) Provide 1 additional stud not more than 6 inches from jamb studs.

i. Fabricate corners with a minimum of three studs.

j. Provide additional studs and framing to support wall intersections, termination of walls, at openings and cut-outs and to support built-in anchorage and attachment devices for other work.

k. Locate studs no more than 2 inches from abutting walls, wall corners and other construction. Start typical wall studs 6 inches either side of stud reinforcing or frames.

l. Install electrical outlets and similar junction boxes at indicated locations. Provide additional blocking and straps for proper locations; do not mount on "nearest" stud.

m. Install steel studs so that flanges point in the same direction and so that leading edges or ends of each gypsum board can be attached to open (unsupported) edges of stud flanges first.

4. Curved surfaces:
   a. Cut runners through leg and web at 2 inch intervals for arc length. In cutting lengths of runners allow for uncut straight lengths of not less than 12 inches at ends of arcs.
   b. Bend runners to uniform curve of radius indicated and locate straight lengths so they are tangent to arcs.
   c. Support cut leg of runners by clinching a 1 inch high by 25-gage uncoated sheet steel strip to inside of cut legs using metal lock fasteners.
   d. Place runners on 8 foot maximum centers and secure at tangent points to maintaim uniform curve.
   e. Begin and end each arc with stud and space intermediate studs equally along arcs at stud spacing recommended by gypsum board manufacturer for indicated radii.
   f. Attach studs to runners with 3/8-inch long pan head framing screws.
   g. On straight lengths at ends of arcs, place studs no greater than 6 inches apart, with last stud left free standing.

5. Backer Plates:
   a. Provide backer plate for securing surface mounted fittings, fixtures, accessories, and furnishings, including, but not limited to handrails, grab bars, toilet walls, towel bars, wall mounted door stops, items listed in Mounting Height and Wall Anchorage Schedule, and similar screw- and bolt-fastened items.
   b. Secure with sufficient quantity of self-tapping sheet metal screws to sustain loads imposed by items attached to backer plates.

6. Blocking: Coordinate with Section 061000 for installation of concealed wood blocking and furring required for securing wood trim, carpentry, woodwork, cabinets, millwork, casework, surface mounted equipment, and similar nail-fastened items.

3.4 GYPSUM BOARD INSTALLATION

A. General:
   1. Comply with more stringent requirements of GA 216, ASTM C840, manufacturer, and these Specifications.

05/03/13 PERMIT SET

2. Install gypsum board panels with face side out.
3. Use boards of maximum length to minimize end joints.
4. Abut boards without forcing; neatly fit ends and edges of board and do not place butt ends against tapered edges with gap between adjacent panels no greater than 1/16 inch. Hold bottom of board 1/4 inch above floor.
5. Support ends or edges of board directly on framing or furring members.
6. Joint Staggering:
   a. Ceilings: Stagger end joints not less than one framing member.
   b. Walls: Stagger vertical joints on opposite side of walls to occur on alternate framing members.
7. Do not locate gypsum board joints within 12 inches of external corners of windows, doors, or other such openings, except when control joints are installed at corners.
8. Cut openings in board with no greater than 1/4 inch gap around electrical outlets, plumbing, light fixtures, piping and other similar penetration items and small enough to be covered by plates and escutcheons.
9. Do not install imperfect, damp and damaged boards.
10. In concealed spaces above ceilings where designated walls extend full height to structure above, install boards in full coverage on both faces of framing system for air and smoke-rated walls.
11. Fit gypsum panels around ducts, pipes, and conduits.
12. Where walls intersect open concrete coffers, concrete joists, and other structural members projecting below underside of floor/roof slabs and decks, cut gypsum panels to fit profile formed by coffers, joists, and other structural members; allow 1/4 to 1/2-inch wide joints to install sealant.
13. In concealed spaces above ceiling where designated chase walls extend full height to structure above, install boards in full coverage on one face of framing system. Fasten horizontal stud or 1-1/2 inch wide 20 gage galvanized steel straps vertically spaced no more than 36 inches apart with top strap no more than 6 inches from top of wall.
14. Attach gypsum panels to steel studs so that leading edge or end of each panel is attached to open (unsupported) edges of stud flanges first.
15. Attach gypsum panels to framing provided at openings and cutouts.
16. Isolate perimeter of non-load-bearing gypsum board walls at structural abutments, except floors, as detailed. Provide 1/4 to 1/2-inch wide spaces and trim edges with LC-bead edge trim where edges of gypsum panels are exposed
17. Control and Expansion Joints: Gypsum Association Publication GA 234.
   a. Spacing: In accordance with GA 234.
   b. Do not bridge building control and expansion joints with gypsum board.. Utilize details shown in referenced standard.
   c. Terminate gypsum board on each side of joints.

B. Fasteners:
   1. Attachment Methods:
      a. Attach board to framing and furring with screws.
      b. Attach board to board with screws.
   2. Except where indicated otherwise, space fasteners in compliance with more restrictive requirements of referenced installation standards or manufacturer's requirements.
   3. Attach board to supplementary framing and blocking which provide additional support at openings and cutouts.

C. Ceilings: Place with long edge perpendicular to orientation of furring or framing members.

D. Single Layer Wall Installation: Install vertically in manner which will minimize end-butt joints.

E. Double Layer Wall Installation:
   1. Install gypsum board for base layer, place long edge parallel to framing or furring members.
   2. Install gypsum board for face layer, place parallel to base layer with offset joints.
   3. Secure base layer with fasteners.
   4. Secure face layer with fasteners or adhesive supplemented with fasteners.

F. Curved Gypsum Board:
   1. Comply with manufacturer's requirements relative to curve radiuses, wetting methods, stacking panels after wetting, and other preparations that precede installing wetted gypsum panels.
   2. Comply with manufacturer's requirements for fastener type and spacing.
   3. For curves with less than 10 feet of arc, select gypsum panel lengths and cut them as required to produce one unbroken panel covering each curved surface plus 12-inch long straight sections at ends of curves and tangent to them.
   4. Wet gypsum panels on surfaces that will become compressed when panels are installed over a curve and where curve radius prevents using dry panels.
   5. Apply gypsum panels with wrapped edges perpendicular to framing.
   6. On convex sides of walls, begin installation at one end of curved surface and fasten gypsum panels to framing as they are wrapped around the curve.
   7. On concave sides of walls, start fastening panels to stud at center of curve and work outward to panel ends.
   8. Fasten panels to framing with screws spaced no greater than 12 inches apart.
   9. Allow wetted gypsum panels to dry before applying joint treatment.
   10. Instead of using wetted panels, application of multiple layers of 1/4 or 3/8 inch thick gypsum panels to form greater thicknesses is acceptable for non-fire-rated assemblies.

3.5 TRIM INSTALLATION

A. Install trim flush using longest practical length; miter corners and intersections.

B. Fasten flanges by screws, stapling, or clinching in accordance with manufacturer's instructions.

C. Install corner beads at visually-exposed external corners, unless otherwise indicated.

D. Install edge trim where edge of board would be exposed or semi-exposed and where board abuts dissimilar materials.

E. Control Joints: Coordinate placement and locations with Engineer prior to commencement of work. Install control joints in accordance with following:
   1. Locate at joints of maximum stress, at points of natural weak planes, such as at openings and at corners of offsets in walls exceeding 30'-0" in length.
   2. Extend control joints from both corners of door frames to top of wall where doors occur in long runs of wall.
   3. Locate in ceilings with area exceeding 900 square feet, where framing or furring changes direction, and spaced apart not more than 30'-0".
   4. Locate in ceilings where wings of "L", "U", and "T" shaped areas are joined.

F. Trim for Curved Surfaces and Edges: Cut flanges at equal size spacings to permit forming to a smooth unsegmented curve.

3.6 GYPSUM BOARD TREATMENTS

A. General:
   1. Apply joint treatment to gypsum board joints (both directions); flanges of corner beads, edge trim, and control joints; penetrations; fasteners; surface defects; and elsewhere to prepare surfaces for decoration and specified levels of gypsum board finish.
   2. Comply with manufacturer requirements for hardening and drying of joint treatment prior to application of succeeding coats.

B. Prefill: Fill open joints, rounded and beveled edges, and damaged areas, flush with adjoining surfaces using prefill compound.

C. Apply joint tape over gypsum board joints and to architectural metal trim with concealed face flanges as required by architectural metal trim manufacturer and as required to prevent cracks from developing in joint compound at flange edges.

D. Levels of Finish:
   1. Comply with GA-214; italicized commentary is excluded; replace words "may" and "should" with "shall."

05/03/13 PERMIT SET

2. Locations to Receive Level 4 Finish: Areas to be painted.
   a. In addition to GA-214, Level 4 Finish gypsum board in areas of intense lighting shall receive one coat of specified basecoat/surfacer to entire surface at manufacturer's recommended coverage rate or mil thickness.
3. Locations to Receive Level 3 Finish: Areas to receive texture finish and areas to receive Moisture resistant gypsum board used as a tile or FRP substrate.
4. Locations to Receive Level 2 finish: Smoke-rated assemblies in ceiling plenums and concealed areas.
5. Locations to Receive Level 1 Finish: Non-fire-rated, and non-smoke-rated assemblies in ceiling plenums and concealed areas.

3.7 ADJUSTING

A. Adjust and align metal framing to properly receive final finishes in accordance with required tolerances.

B. Correct damages, defects, and leave work ready for decoration. Clean compounds from trim. Visible cracks, nail heads, tool marks, waves, distortions, or other similar defects shall not appear in finished work.

3.8 CLEANING

A. Clean as recommended by manufacturer. Do not use materials or methods which may damage finish or surrounding construction.

B. Promptly remove joint compound from surfaces not intended to receive compound.

3.9 PROTECTION

A. Protect finished work.

B. Protect metal framing from damage detrimental to finished work.

END OF SECTION

05/03/13 PERMIT SET

SECTION 093000

TILING

PART 1 - GENERAL

1.1 SUMMARY

A. Related Sections:
   1. Section 035400 – Cast Underlayment: Self-leveling underlayment for use under large format tile.
   2. Section 079200 - Joint Sealants.
   3. Section 092900 - Gypsum Board: Moisture and Mold Resistant Board.

1.2 SUBMITTALS

A. Product Data: Submit product data for each product.

B. Shop Drawings:
   1. Show perimeter conditions and junctions with dissimilar materials.
   2. Indicate and detail expansion and control joints.

C. Samples:
   1. Tile: Submit tile samples for each type, color and size.
   2. Grout: Submit manufacturer's full range of standard and designated color samples for each type for Engineer's selection.
   3. Mounted samples: Submit 12 by 24 inch square grouted tile samples, mounted on 3/4 inch plywood, for each combination of tile and grout types and colors.

D. Submit following Informational Submittals:
   1. Certifications specified in Quality Assurance article.
   2. Qualification Data: Manufacturer's and installer's qualification data.
   3. Manufacturer's instructions.

E. Closeout Submittals:
   1. Maintenance data. Include stain removal methods.

1.3 QUALITY ASSURANCE

A. Single Source Responsibility:
   1. Obtain each type and color tile material required from single source.
   2. Obtain setting and grouting materials from one manufacturer to ensure compatibility.

B. Manufacturer Qualifications:
   1. Tile: Minimum 5 years experience in manufacture of tile products.
   2. Setting materials: Minimum 10 years experience in manufacture of setting and grout materials specified.

C. Installer Qualifications: Specializing in tile work having minimum of 5 years successful documented experience with work comparable to that required for this Project.

D. Floor Tile Slip Resistance: Comply with ANSI A137.1, 2012 edition Dynamic Coefficient of Friction AcuTest of 0.42 wet as tested with BOT-3000 Universal Walkway Tester.

E. Certifications:
   1. Submit "Master Grade Certificate" for each type of ceramic and quarry tile in accordance with requirements of ANSI A137.1.
   2. Submit manufacturer's certifications that mortars, adhesives and grouts are suitable for intended use.

1.4 DELIVERY, STORAGE, AND HANDLING

A. Labeling: Comply with ANSI A137.1

B. Deliver materials in manufacturer's unopened containers, fully identified with name, brand, type and grade.

05/03/13 PERMIT SET

C. Protect materials from contamination, dampness, freezing, or overheating in accordance with manufacturer's instructions.

D. Broken, cracked, chipped, stained, or damaged tile will be rejected, whether built-in or not.

E. Protect mortar and grout materials against moisture, soiling, or staining.

1.5 ENVIRONMENTAL REQUIREMENTS

A. Comply with requirements of referenced standards and recommendations of material manufacturers for environmental conditions before, during, and after installation.

B. Maintain continuous and uniform building temperatures of not less than 50 degrees F during installation.

C. Ventilate spaces receiving tile in accordance with material manufacturers' instructions.

PART 2 - PRODUCTS

2.1 PORCELAIN TILE

A. General:
   1. Material: Porcelain based, impervious unglazed ceramic, through body color.
   2. Basis of Design: Refer to Finish Schedule on Drawing Sheet A600.

B. Trim Shapes:
   1. Base, caps, returns and other trim accessories as required; same characteristics as tile.
   2. If base is cut from full-size tile, bevel top edge and polish to match face.

2.2 SETTING BED MATERIALS

A. Polymer Modified Thinset Dryset Mortar:
   1. Description: One or two component system; factory prepared second generation high bond strength dryset mortar and polymer additive; complying with ANSI A118.4.
   2. For use at interior and exterior conditions, thermal and shock proof.
   3. Acceptable Products:
      a. Laticrete 4237 Mortar Admix with Laticrete 211 Crete Filler, Laticrete International.
      b. Kerabond and Keralastic, Mapei Corporation, Garland, TX.
      c. MegaFlex Crack Prevention Mortar, Custom Building Products, Seal Beach, CA

2.3 GROUTS

A. Latex-Modified Sanded Grout:
   1. Description: Latex-modified, factory blended, mildew resistant, sanded, grout consisting of portland cement, graded quartz and additives; comply with ANSI A118.7.
   2. Latex Additive: Type as recommended by latex mortar manufacturer.
   3. Color: As selected from manufacturer’s full color line.
   4. Acceptable Products:
      a. Laticrete 1500 Sanded Grout with Laticrete 1776 Grout Admix.
      b. Keracolor S, Mapei Corporation.
      c. Polyblend Sanded Grout, Custom Building Products, Seal Beach, CA.

2.4 ACCESSORIES

A. Floor to Wall Transition Trim:
   1. Coved stainless steel transition for joint between floor and wall tile.
   2. Product: Schluter-DILEX-EHK.

B. Joint Fillers and Sealants:
   1. Provide in accordance with Section 079200 - Joint Sealants.
      a. Vertical Surfaces: Silicone—Sanitary.
      b. Horizontal Surfaces: Urethane—Traffic-Bearing.
   2. Color: Match grout.
   3. Ensure sealant is chemically compatible with tile, mortar, and grout.

05/03/13 PERMIT SET

4. Ensure sealant can physically and chemically withstand environmental conditions normally expected at installation areas.

C. Adhesives & Sealants (including grouts):
1. Adhesives shall meet or exceed the VOC and chemical component limits of Cal-GREEN Table 5.504.4.1 Adhesive VOC Limit requirements.
2. Sealants shall meet or exceed the VOC and chemical component limits of Cal-GREEN Table 5.504.4.2 Sealant VOC Limit requirements.

D. Primers:
1. As recommended by manufacturer of mortar, grout, crack isolation, and sealant materials.
2. Use primers that comply with Cal-GREEN Table 5.504.4.3 for VOC Content Limits for Architectural Coatings.

E. Substrate Fillers and Sealers: Materials as recommended by manufacturers of setting materials.

F. Grout Sealers: Water based silicone sealer, clear, VOC compliant, non-yellowing formula, to protect grout from staining.
1. Use sealers that comply with Cal-GREEN Table 5.504.4.3 for VOC Content Limits for Architectural Coatings.
2. Acceptable Products:
a. Laticrete 190 Grout Sealer.
b. Miracle Sealants Grout Sealer.
c. Grout Sealer, Aqua Mix.

PART 3 - EXECUTION

3.1 EXAMINATION

A. Examine conditions and proceed with Work when substrates are ready.

B. Verify that substrates comply with TCNA tolerance requirements.

3.2 PREPARATION

A. Clean substrates.

B. Prepare surfaces in strict accordance with instructions of manufacturer whose setting materials or additives are being used.

C. Acid Based Cleaners: Use not permitted.

D. Scarify concrete substrates with blast track equipment if necessary to completely remove curing compounds or other substances that would interfere with proper bond of setting materials. Clean and maintain substrate in condition required by setting material manufacturer.

E. Do not seal substrate unless required by manufacturer.

F. Prime substrate when required by manufacturer.

3.3 INSTALLATION

A. General:
1. Install tile materials in accordance with ANSI A108 series, other referenced ANSI and TCNA specifications, and TCNA "Handbook for Ceramic Tile Installation", except for more stringent requirements of manufacturer or these Specifications.
2. Pattern: As indicated. Layout tile work and center tile fields in both directions in each space or on each wall area.
3. Lay out tile to minimize cutting and to avoid tile less than half size.
4. Place tile joints uniform in width, subject to variance in tolerance allowed in tile size.
5. Cut and fit tile at penetrations through tile. Do not damage visible surfaces. Carefully grind edges of tile abutting built-in items. Fit tile at outlets, piping and other penetrations so that plates, collars, or covers overlap tile.
6. Extend tile work into recesses and under or behind equipment and fixtures, to form complete covering without interruptions, except as otherwise indicated. Terminate work neatly at obstructions, edges and corners without disrupting pattern or joint alignments.
7. Accurately form intersections and returns.

05/03/13 PERMIT SET

B. Thin-Set Method:
   1. Apply mortar with notched trowel using scraping motion to work material into good contact with surface to be covered.
   2. Apply only as much mortar as can be covered within 20 to 30 minutes or while surface is still tacky.
   3. Trowel small quantity of mortar onto back (back-butter) of each tile.
   4. Set tiles in place and rub or beat with small beating block.
   5. Beat or rap tile to ensure proper bond and also to level surface of tile.
   6. Align tile to show uniform joints and allow to set until firm.
   7. Clean excess mortar from surface of tile with wet cloth or sponge while mortar is fresh.

C. Grouting And Pointing:
   1. After tile has set sufficiently, fill joints with grout until flush with surrounding tile.
   2. Point joints full and remove excess grout. Clean tile thoroughly.
   3. Install sealant in vertical wall joints at interior corners.
   4. Install tile with maximum 25 percent variation of specified grout joint width.

D. Expansion Joints:
   1. Keep expansion joints free of mortar and grout.
   2. Provide expansion joints directly over changes in material, over control and expansion joints in substrate, at juncture of floors and walls, at other restraining surfaces such as curbs, columns, bases, and wall corners, and where recommended by TCNA EJ171 Expansion Joint requirements.
   3. Install sealant in expansion joints.
   4. Provide sealant material at items penetrating tile work, unless otherwise indicated.
   5. Provide sealants and related materials in accordance with cited ANSI and TCNA requirements.

3.4 ADJUSTING

A. Sound tile after setting. Replace hollow sounding units.

3.5 CLEANING

A. Clean tile surfaces in accordance with manufacturer's instructions.

B. Clean excess mortar from surface with water as work progresses. Perform cleaning while mortar is fresh and before it hardens on surfaces.

C. Remove grout haze in accordance with grout manufacturer requirements. Do not use acids for cleaning.

3.6 PROTECTION

A. Protect finished work.

B. Prevent wheel and foot traffic from using newly tiled floors for at least 72 hours after installation.

C. Where temporary use of new floors is unavoidable, supply large, flat boards or plywood panels for walkways over kraft paper.

D. Protect work so that it will be without any evidence of damage or use at time of acceptance.

3.7 SCHEDULES

A. Floor Tile Installation Schedule:
   1. Thin Bed Floor Tile System:
      a. Description: Thin set.
      b. Location: Toilet Rooms
      c. Tile: Porcelain
      d. Mortar: Polymer Modified Thinset Dryset Mortar.
      e. Grout: Latex-modified.
      f. TCNA system: F113 and F113A and F-205 and F-205A.

05/03/13 PERMIT SET

B. Wall Tile Installation Schedule:
   1. Interior Wall Tile System:
      a. Description: Interior partitions using gypsum board.
      b. Location: Toilet Rooms
      c. Tile: Porcelain
      d. Mortar: Polymer Modified Thinset Dryset Mortar.
      e. Grout: Sanded latex-modified.
      f. TCNA System: W243.

END OF SECTION

05/03/13 PERMIT SET

SECTION 096283

STRUCTURAL GLASS FLOORING

PART 1 - GENERAL

1.1 SUMMARY

A. Section Includes:
   1. Structural laminated glass flooring.
   2. Associated glazing sealants and accessories.

1.2 SYSTEM REQUIREMENTS

A. Design Requirements:
   1. Employ registered professional engineer, licensed to practice structural engineering, to engineer each component of structural glass flooring system.
   2. Provide clear glass with slip-resistant characteristics meeting ADA requirements.

B. Performance Requirements: Provide thickness of glass units to withstand foot traffic live loads.
   1. Load assumptions: 100 psf live load and a 300lbs concentrated load on 2 x 2 inch in worst condition (at the unsupported glass edge) in two separate load cases.
   2. Slip-resistant surface: Ceramic frit with minimum 20 percent coverage.

C. Glazing Requirements:
   1. Comply with CPSC 16 CFR 1201 and ANSI Z97.1 for safety requirements of glazing materials.
   2. Glass thickness, where indicated, are minimum requirements and are to be confirmed by glass manufacturer.
   3. Obtain safety glazing products permanently marked with certification label of the Safety Glazing Certification Council or another certification agency acceptable to authorities having jurisdiction.

1.3 GLASS FLOOR ASSEMBLY DESCRIPTION

A. Interior structural glass floor assembly shall be custom designed, engineered, detailed, factory fabricated, and site erected. Assembly shall consist of glass floor panels installed on floor blockouts with structural silicone sealant.

B. Basic configuration: Multiple structural glass panels installed in floor opening supported by concrete blockout shelf to provide architectural appearance shown on Drawings.

C. Dimensions: Glass floor assembly shall be nominal dimensions shown on Drawings. Minor variations to accommodate manufacturer's design and components are acceptable provided overall concept is maintained.

D. Glass floor panels: Rectangular shaped panels of sizes and layout indicated on Drawings.

E. Design, size components, and install glass floor assembly in accordance with ASTM E1300 to withstand floor live loads without breakage, loss, failure of seals, product deterioration, and other defects.
   1. Dead and live loads: Determined by ASCE 7 and calculated in accordance with applicable codes.
   2. Seismic loads: System shall be designed and installed to comply with applicable seismic requirements for Project location as defined by of ICC/IBC.

F. Provide and install gaskets, sealants, and other glazing accessories to resist movement without create stress on glass panels.

1.4 SUBMITTALS

A. Product Data: Manufacturer's product data for each type of structural glass flooring and glazing material specified, including glazing accessories and glazing sealants.

B. Shop Drawings:
   1. Plans and sections showing components, layout, configuration, and dimensions.

05/03/13 PERMIT SET

2. Sections and details of glass and glazing materials installation at floor blockouts including cushioning of glass against substrate.
3. Illustrate method of assembly, installation, and glazing.
4. Provide details for secondary support framing, connections, joints, and other fabrication and installation conditions.
5. Indicate required tolerances and coordination with adjacent elements.
6. Stamp shop drawings with seal and signature of professional engineer responsible for design for structural glass flooring.

C. Samples: 12 inches by 12 inches in size illustrating color of structural glass flooring units.

D. Submit following Informational Submittals:
1. Previous installations of structural glass flooring.
2. Slip-resistant test data.
3. Certifications specified in Quality Assurance article.
4. Qualification Data: Engineer's and installer's qualification data.
5. Manufacturer's instructions.

E. Closeout Submittals:
1. Warranty: Submit specified warranty.

1.5 QUALITY ASSURANCE

A. Single source responsibility:
1. Design, structural engineering, and custom fabrication for glass floor assembly and supply of all components, materials, and products shall be sole responsibility of single manufacturer.
2. Provision of products from numerous sources for site assembly without complete single source design and supply responsibility is not acceptable.
3. Components to be fabricated or supplied by single source are:
   a. Glass.
   b. Structural silicone sealant, backers, setting blocks, spacers, fittings, and other installation accessories.
   c. Other components, products, and materials required for complete, functional glass floor.

B. Engineer Qualifications: Registered professional engineer licensed to practice structural engineering, with minimum of 5 years experience in design of glass and glazing.

C. Manufacturer Qualifications: Company specializing in designing, engineering, and fabricating unique, custom designed, glass floor assemblies, canopies, facades, entrances, storefronts, and other glazed structures.
1. Experience: 5 years minimum successful experience providing glass structures.
2. Previous projects: Successfully completed 3 minimum glass structures of scope, type, and size as proposed Project.

D. Installer Qualifications: Acceptable to manufacturer with documented experience on at least 5 projects of similar nature in past 3 years.

E. Regulatory Requirements:
1. Fabricate glass to comply with ASTM C1036, ASTM C1048, and ANSI Z97.1.

F. Certifications:
1. Manufacturer's letter certifying glass and glazing materials compatibility to span project openings and meet slip resistance requirements.
2. Engineering certifications.

1.6 PRE-INSTALLATION CONFERENCE

A. Review at meeting:
1. Coordination with flooring blockouts.
2. Coordination with primary floor system and floor finishes.
3. Schedule, sequence, and method for installing glass floor and coordination with other work.
4. Safety procedures.
5. Availability of system materials.

6. Pre-installation test reports and recommendations.
7. Chemical compatibility of support framing, glass panels, sealants, and other glazing materials.
8. Protection of adjacent items and finishes.
9. Approved mock-up to be used a measure of acceptance.
10. Other items related to successful execution of work.

1.7 DELIVERY, STORAGE, AND HANDLING

A. Deliver, store, and handle products in accordance manufacturer's instructions.

B. Protect glass and other components during delivery, storage, and handling in accordance with manufacturer's instructions. Prevent edging chipping and other damage.

C. Do not store glass panels on site for extended time.

1.8 WARRANTIES

A. Submit manufacturer's 2 years warranty to cover design, fabrication, and materials against defects and failure to perform and remain air and water tight. Warranty to provide for replacement of defective components.

B. Glass fabricator's warranties: 5 years warranty to cover replacement of laminated glass units in event of delamination, edge separation, and blemishes.

PART 2 - PRODUCTS

2.1 MANUFACTURERS

A. Acceptable Structural Glass Manufacturers:
1. Innovative Structural Glass, Inc, Three Rivers, CA.
2. Paragon Architectural Products, LLC, Scottsdale, AZ.
3. Dependable Glass Works

B. Basis of Design: Paragon T-Glaz anti slip clear.

2.2 GLASS FLOOR COMPONENTS

A. Type of Glass: Laminated glass fabricated by bonding two or more glass panes with transparent, flexible interlayment material in accordance with ASTM C1172. Laminated glass shall meet requirements of ANSI Z97.1 and CPSC 16 CFR to qualify as safety glass.

B. Fabricate laminated glass for floor panels from ASTM C1048 Kind HS heat strengthened glass in multiple layers and thicknesses as determined by manufacturer to accommodate Project design and performance requirements.

C. Color: Clear.

D. Clean cut glass units to required sizes. Edges exposed to view after installation shall be highly polished with arissed corners and edges.

E. Proposed Glass Make-up (from top to bottom):
1. 6 mm (1/4") heat-treated glass with slip-resistant surface treatment on surface #1. Depending on the surface treatment, the glass can be fully tempered and heat-soak tested or heat-strengthened.
2. 0.035 inch SGP interlayer minimum
3. 10 mm (3/8") annealed glass
4. 0.035 inch SGP interlayer minimum
5. 10 mm (3/8") annealed glass

2.3 STRUCTURAL SEALANT GLAZING MATERIALS

A. Provide glazing accessories, anchors, and fasteners of type and size recommended by glass floor manufacturer and as required for complete, functional, weathertight installation.

B. Contact structural sealant equal to Dow Corning DC795: High performance, one component, non-sag, neutral cure, ultraviolet resistant, silicone sealant designed for structural glazing and complying with ASTM C920 and C1184.

C. Sealant backing: Provide backing as recommended by sealant manufacturer and complying with ASTM C1330. Backing shall be greater than joint opening by 25 percent minimum.

D. Setting blocks and spacers: Compatible with silicone sealant, complying with ASTM C864, and recommended by sealant manufacturer.

E. Masking tape: Non-staining, non-absorbent type compatible with silicone sealant and adjacent surfaces.

F. Cleaners and primers: Recommended by sealant manufacturer to be compatible with substrate and glazing materials.

PART 3 - EXECUTION

3.1 EXAMINATION

A. Examine conditions and proceed with work when substrates are ready.

B. Verify that concrete support blockouts and substrates are ready to receive glass floor. Verify alignment, dimensions, and tolerances are correct.

C. Verify that openings for glazing are correctly sized and within tolerances.

D. Examine glass panels for chipped edges, scratches, abrasions, and other damage.

3.2 PREPARATION

A. Clean contact surfaces with solvent and wipe dry.

B. Prime surfaces scheduled to receive sealant, if required by sealant manufacturer.

C. Verify that materials used for cleaning edges of laminated units are compatible with sealants and components and will not damage or cause deterioration of the integrity of laminated unit.

3.3 INSTALLATION

A. Install glass flooring units in accordance with approved shop drawings, manufacturer's installation instructions, and GANA Glazing Manual.

B. Damaged glass: Do not install glass with edge damage or other imperfections. Remove from site and replace.

C. Allow for settling, expanding, and contracting to occur without breaking glass.

D. Do not field cut or alter structural framing without written approval from manufacturer and Engineer.

3.4 STRUCTURAL SILICONE GLAZING

A. Install glass floor panels with structural silicone sealant as detailed on Drawings and approved shop drawings and in accordance with manufacturer's installation instructions.

B. Cleaning: Thoroughly clean all joints and glazing areas immediately prior to sealant application. Remove oil, dust, grease, water, surface dirt, contaminants, and other foreign matter. Vacuum or blow out dust and loose particles from joints and solvent wipe clean in accordance with ASTM C1193.

C. Apply primer only if determined by testing and recommended by sealant manufacturer.

D. Mask areas adjacent to sealant joints to ensure neat sealant line. Do not allow tape to touch surfaces to which sealant will be applied.

E. Glass panel perimeter joint: Install temporary spacers to support glass above perimeter framing and to offset from perimeter framing. Apply structural silicone sealant in space between glass floor panel and perimeter frame. Tool joints concave. After sealant cures, remove temporary spacers and fill resulting voids with sealant.

F. Apply structural silicone sealant in continuous operation. Tool sealant immediate before skin forms. Tool concave to ensure complete contact.

3.5 CLEANING

A. Touch up damaged or abraded factory finishes with coating to match type and color of original finish.

B. Wash exposed surfaces with solution of mild detergent applied with soft cloth.

C. Remove excess glazing materials from finished surfaces.

D. Remove labels after work is completed.

E. Wash and polish both faces not more than 7 days prior to Owner's acceptance of work.

F. Comply with glass manufacturer's recommendations for final cleaning.

END OF SECTION

05/03/13 PERMIT SET

SECTION 096813

TILE CARPETING

PART 1 - GENERAL

1.1 SUMMARY

A. Related Sections:
   1. Section 062000 – Finish Carpentry: Painted MDF wall base.

1.2 SYSTEM DESCRIPTION

A. Furnish carpet tile conforming to following performance characteristics:
   1. Static Propensity:
      a. Test: AATCC 134.
      b. Result: 3.5 kV maximum at 20 percent RH and 70 degrees F using step and scuff tests with neolite and leather soles.
      c. Prior to performing test, ensure carpet has been cleaned of applied surface finishes.
   2. Colorfastness to Light:
      a. Test: AATCC 16E with Xenon arc light source.
      b. Results: Minimum rating of 4.0 on AATCC gray scale after 60 hours of continuous exposure.
      c. Test specified carpet and color.
   3. Dimensional Stability:
      a. Test: ISO 2551.
      b. Results: Maximum change of 0.15 percent.
   4. Antimicrobial:
      a. Test: AATCC 174.
      b. Results: Part II, minimum 90 percent reduction of Gram positive and negative bacteria. Part III, no growth on fiber and backing.

B. Regulatory Requirements:
   1. Ensure flammable components comply with applicable portions of local, state, and federal codes, laws, and ordinances for toxicity, flame spread and smoke developed indices.
   2. Fire Resistance Ratings: Provide carpet tile which complies with following requirements as determined by independent testing laboratory acceptable to authorities having jurisdiction:
      a. Methenamine Pill Test: DOC FF 1-70, Pass.
      b. Critical Radiant Flux: ASTM E648, Class I, 0.45 watts/cm^2 minimum.
      c. Flame Spread: 25 or less, ASTM E662 or NFPA 255.
      d. Smoke Generated: 450 or less, ASTM E662 or NFPA 255.
   3. Accessibility:
      a. Carpet Construction: Maximum total pile height/thickness 1/2 inch.
   4. Comply with local regulations controlling use of volatile organic compounds for installation products.

1.3 SUBMITTALS

A. Product Data: Submit product data for each product.

B. Samples: Submit full tile to match Engineer's sample for each type, pattern, color and size selected.

C. Submit following Informational Submittals:
   1. Certifications specified in Quality Assurance article.
   2. Qualification Data: Manufacturer's and installer's qualification data.
   3. Manufacturer's instructions.

D. Closeout Submittals:
   1. Maintenance data.
   2. Warranty: Submit specified warranty.

05/03/13 PERMIT SET

1.4 QUALITY ASSURANCE

A. Single Source Responsibility: Furnish carpet tile from one manufacturer for entire Project, unless otherwise acceptable to Engineer.

B. Manufacturer Qualifications: Company specializing in manufacturing of carpet tile with minimum 5 years experience.

C. Installer Qualifications: Acceptable to manufacturer with experience on at least 5 projects of similar nature in past 5 years.

D. Certifications:
   1. Manufacturer's certification that products furnished for project meet or exceed performance and regulatory requirements included as part of System Description article.
   2. Contractor's and installer's certification that products are installed in accordance with Contract Documents.
   3. Manufacturer's certification that carpet tile furnished for project meets one of following requirements:
      a. Indoor Air Quality Carpet Testing, Carpet and Rug Institute, include CRI Certification number (Green Label Plus).
   4. Antimicrobial: Environmental Protection Agency registration numbers for antimicrobial agent in products furnished.

1.5 DELIVERY, STORAGE, AND HANDLING

A. Deliver, store, and handle products in accordance manufacturer’s instructions.

B. Deliver materials to project site in manufacturer's unopened containers clearly marked with manufacturer's name, brand, size, thickness, grade, color and design.

1.6 PROJECT CONDITIONS

A. Environmental Requirements:
   1. Comply with manufacturer's written requirements under which products can be installed.
   2. Store carpet tile materials in spaces where they will be installed for at least 48 hours before beginning installation.
   3. Maintain minimum temperature of 65 degrees F and maximum relative humidity of 65 percent for minimum of 24 hour prior to installation. Maintain temperature for 72 hours after installation.

B. Substrate Conditions: Do not install carpet tile over concrete slabs until they are cured and are sufficiently dry to achieve bond with adhesive as determined by manufacturer's bond and moisture tests.

1.7 SEQUENCING

A. Install carpet tile after other finishing operations, including painting, have been completed.

1.8 WARRANTY

A. Warrant installed carpet tile, adhesives, and accessories for 5 years. Include coverage for:
   1. Shrinkage and stretching.
   2. Color irregularity.
   3. Delamination.
   4. Tuft bind and edge unraveling.
   5. Peaking, doming, and edge curling.
   6. Failure to perform as specified.

B. Wear: Provide carpet wear warranty signed by authorized representative of carpet manufacturer stating that surface wear is not to exceed 10 percent by weight for 10 year period from date of installation.

C. Static Propensity: Provide warranty for life of carpet tile that static propensity will not exceed performance specified in System Description article

1.9 EXTRA STOCK MATERIALS

A. Furnish extra carpet tile in quantity equal to 3 percent of total material furnished but not less than one unopened box of tile for each type, pattern and color.

B. Store at Job Site where directed. Ensure boxes are identified by manufacturer, pattern and color.

PART 2 - PRODUCTS

2.1 MANUFACTURERS AND PRODUCTS

A. Carpet Tile:
   1. Basis of Design: Refer to Finish Schedule on Drawing Sheet A600.

2.2 ACCESSORIES

A. Reducer and Transition Strips: Provide color coordinate resilient components.

B. Patching Compound:
   1. Pre-mixed latex recommended by carpet manufacturer.
   2. Gypsum based products not allowed.
   3. Compatible with adhesive and concrete curing/sealing compound.

C. Adhesives:
   1. Removable adhesive with antimicrobial additive; approved by carpet tile manufacturer.
   2. Green Label Plus certified.
   3. Adhesives and sealants shall meet or exceed the VOC and chemical component limits of Cal-GREEN Table 5.504.4.1 Adhesive VOC Limit, and Cal-GREEN Table 5.504.4.2 Sealant VOC Limit requirements.

PART 3 - EXECUTION

3.1 EXAMINATION

A. Examine conditions and proceed with work when substrates and environmental conditions are ready.

B. Tests concrete substrate for pH, contaminants, and moisture content. Ensure concrete is within manufacturer's required limits prior to installation.

C. Do not begin flooring work until concrete substrate has cured for minimum of 90 days.

D. Bond and Moisture Tests:
   1. Perform in accordance with flooring manufacturer’s requirements to determine suitability of concrete subfloor for receiving carpet flooring with regard to moisture content and curing compounds.
   2. Test concrete slabs in accordance with ASTM F710 to ensure moisture content is 3 percent or less.
   3. Test with calcium chloride in accordance with ASTM F1869 to ensure vapor transmission rate less than 4 pounds per 1000 sq. ft.
   4. Submit report to Owner. If subfloor’s moisture vapor permeance is in excess of flooring manufacturer’s limits for issuing warranty, prepare slab and apply vapor retarder underlayment system acceptable to manufacturer, or use manufacturer’s adhesive for application on substrates containing excessive moisture.

E. Do not begin flooring work until concrete substrate has cured for minimum of 90 days.

3.2 PREPARATION

A. Remove ridges and bumps. Fill depressions, low spots, cracks, joints, holes, indentations, and other defects with leveling and patching compounds.

B. Clean substrate to remove paint, dirt, oil, grease, sealers, release agents, hardening compounds, curing compounds, residual adhesives, and substances which could impair performance of adhesive materials.

C. Broom clean and vacuum surfaces to remove dust and debris.

3.3 INSTALLATION

A. Install in accordance with CRI-104, manufacturer's instructions, and approved shop drawings.

B. Install carpet tiles square and aligned with adjacent surfaces.

C. Lay carpet tile with run or pile in same direction as anticipated traffic.

D. Install reducer strip where carpet tile terminates at other floor coverings.

3.4 CLEANING

A. Clean as required by manufacturer. Do not use materials or methods which may damage carpet and surrounding construction.

3.5 PROTECTION

A. Protect finished work.

B. Comply with CRI 104, Section 15: "Protection of Indoor Installation."

C. Maintain protection satisfactory to manufacturer and installer to ensure carpet not damaged at time of Substantial Completion.

END OF SECTION

05/03/13 PERMIT SET

SECTION 098400

ACOUSTICAL WALL PANELS

PART 1 - GENERAL

1.1 SUMMARY

A. Section Includes: Acoustical Wall Panels with fabric finish.

B. Related Sections:
   1. Section 092900 - Gypsum Board
   2. Section 099000 – Painting and Coating

1.2 SYSTEM REQUIREMENTS

A. Include all labor, materials, and plant as required for the fabrication and delivery of acoustical wall panels complete in all respects as described and specified herein.

1.3 SUBMITTALS

A. Submit to the Engineer of record, three (3) complete sets of CAD generated shop drawings, or standard detail sheets, prepared by the manufacturer showing all necessary details and dimension requirements which will subsequently be field verified and revised as required by the Engineer.

B. Samples: Submit (3 sets) manufacturers standard 8" (200mm) x 11" (280mm) sample panels of each type of product as specified in Part 2 to the Owner for approval. Product shall be original production material in fabric finish specified for final use.

C. Certification: Submit to the owner a certificate of compliance to specified acoustical and fire performance criteria as stated section 1.4 and Part 2 of this specification, signed by an officer of the panel manufacturer and attach independent laboratory test results for each product used, showing that the products supplied as components and complete assemblies, meet or exceed the specified requirements.

D. Prior Approval: Manufacturers not listed in section 2.1 of this specification and wishing to be submitted as an equal on the project must submit information in accordance with section 1.03 of this specification fifteen days prior to the bid date as outlined in the contract documents. The information submitted must give evidence to show that the alternative product equals or exceeds the attributes and performance of the specified product.

E. Manufacturers Approval: The manufacturer shall have the right to approve the selection of the installing contractor and to verify that said contractor has sufficient experience and expertise to complete the project in a satisfactory manner.

F. Single Source: All custom acoustical wall and ceiling panels shall be purchased from a single supplier.

G. Closeout Submittals:
   1. Submit under provisions of Section 017800.
   2. Warranty: Submit specified warranty.

1.4 QUALITY ASSURANCE

A. Manufacturer & Installer: Firm manufacturing the specified product shall have adequate capacity required for projects listed and have successfully completed similar projects for a period of not less than five years. The installer shall be approved by the manufacturer as qualified to perform work required.

B. Reference Standards: Conform to all governing laws, building codes, and the following performance criteria:

05/03/13 PERMIT SET

1. Fire Performance Characteristics: Provide wall panels with surface-burning characteristics as determined by testing panel components in accordance with ASTM E84 test procedures (building code requirements may necessitate composite panel testing using identical materials and construction representative of a typical installation, using the specified finish(es) - Decoustics has a considerable number of composite ASTM E84 panel tests on file).
   a. ASTM E-84 testing must be performed by a testing organization acceptable to authorities having jurisdiction
2. Acoustical Performance Characteristics: Provide wall panels with acoustical absorption characteristics as indicated in Part 2, which have been determined by testing fully assembled production material in accordance with ASTM C-423 (Type "F5" mounting as defined by ASTM E-795) by a testing organization acceptable to authorities having jurisdiction. Approved testing organization must be independent of the manufacturer.

ASTM E-84	Classification	Class “A” or “1”
	Flame Spread	25 or less
	Smoke Developed	450 or less

Note: If testing to the above standards is required for non-standard finishes on panels, a cost of testing allowance must be part of the specification. Remember there are no guarantees with fire testing, and it may be necessary to test more than one proposed finish in order to meet the code requirements. Please contact an accredited fire or acoustic testing laboratory for information on cost of testing.

3. All fabric finishes specified for acoustic panels shall be tested in accordance with ASTM D6207 - Standard Test Method for Dimensional Stability of Fabrics to Changes in Humidity and Temperature.

1.5 DELIVERY, STORAGE, AND HANDLING

A. Deliver fabricated units and related components to the site for installation in accordance with a reasonable schedule furnished by the contractor. On-site storage shall be such as to assure that all panels and associated materials are protected from damage, and storage area is climatically controlled to normal operational levels.

B. Prior to panel installation, the site must be free of all wet and dusty trades and the climatic conditions stabilized to normal operational levels. Panels shall be allowed to stabilize on site 24 hours prior to installation.

C. Panels must only be handled by persons wearing clean light-weight gloves. It is very important that personnel installing hardware (wall clips, screws, anchors, etc.) do not handle the panels before putting the clean lightweight gloves on.

1.6 WARRANTY

A. Furnish to the Engineer in the Owner's name, the manufacturers written guarantee covering the products supplied against defects in materials and workmanship under normal operating conditions for a period of one year from the date of shipment. Submit certificates of compliance showing warranty period by dates for each project completed to the Owner.

05/03/13 PERMIT SET

PART 2 - PRODUCTS

2.1 MANUFACTURERS

A. Decoustics “Type AP-1” as Manufactured by Decoustics Limited, or approved equal.

1. Panels shall have noise reduction coefficient values of the following when tested in accordance with section 1.4 of this specification.

Panel			Frequency (HZ)							
Type	**Thickness**	**Finish**	**125**	**250**	**500**	**1000**	**2000**	**4000**	**NRC**	**SAA**
AP-1	1” (25mm)	Fabric*	0.04	0.32	1.00	0.90	0.52	0.40	0.70	0.68

*Carnegie Xorel Strie stretch applied

2.2 FABRIC FINISH

A. Carnegie Xorel Strie or approved equal.

1. Fabric finished panels shall be type AP-1Fabric finished panels shall be type AP-1 with chemically hardened edges. The panel shall be constructed of 6 to 7 lb./cu.ft (96 to 112 kg/cu.m.) density fibre glass acoustically absorptive core, 1" (25mm) overall thickness, and finished as detailed in this section. The core shall be free of surface defects and sanded as required to a uniform thickness which will not vary by more than +/- 0.03" (1.0mm). The panels shall be fabricated to sizes supplied by the installing Contractor, using a CAD/CAM (CIM) Robotics cutting system to ensure accurate panel core dimensions to a tolerance of +/- 0.06" (1.6mm). Edges shall be chemically hardened to withstand moderate impact during installation and ongoing maintenance. Chemically hardened edges will be profiled as shown on the architectural drawings. Soft or non-framed edge treatments are not acceptable. All panels shall be clearly text marked with the project I.D. number, panel number, location code, quantity of units per size, and correspond to the shop drawings or bill of materials.
2. Fabric finishes shall be stretched over, or bonded to, the panel face, bonded to the panel edges and returned a minimum of one inch (25mm) on the back of the panel. The finish shall be flat and wrinkle free and fully tailored at corners with no exposed darting. All finishes shall be tested for suitability (ASTM D6207) and approved for use by the panel manufacturer prior to procurement and fabrication.

PART 3 - EXECUTION

3.1 EXAMINATION

A. Examine conditions and proceed with work when substrates are ready.

B. Verify clear dimension in field prior to installation.

3.2 INSTALLATION

A. Install panels in accordance with manufacturer’s instructions.

B. Protect finished Work.

3.3 INSPECTION AND APPROVAL

A. Adjustment and Replacement

1. The Owner shall inspect the installation and product on completion. The manufacturer shall provide repair or replacement of components not conforming to requirements as stated herein, and said work will then become bound by the terms of this specification.
2. Installation labor for removal and replacement of product improperly installed and not conforming to specified installation methods, and shown on approved shop drawings or detail sheets, shall be the responsibility of the installing Contractor.

B. Additional Material
   1. If required provide to the Owner on completion of work, maintenance stock of fabric finish(es) used in an identical dye lot, the greater of an amount equal to 2% of the total yardage required or enough material to cover one of the largest acoustical units supplied.

END OF SECTION

05/03/13 PERMIT SET

SECTION 099000

PAINTING AND COATING

PART 1 - GENERAL

1.1 SUMMARY

A. Section Includes:
   1. Preparation and priming of surfaces scheduled in PART 2 of this section to receive finish coatings.
   2. Dry erase coating.
   3. Painting and finish coating of exterior and interior items and surfaces, including:
      a. Exposed interior surfaces.
      b. Existing corrugated siding and roofing.
      c. Existing steel windows and doors.
      d. Scheduled and otherwise identified exterior surfaces.
      e. Exposed interior mechanical and electrical equipment.
      f. Exposed interior steel structure, piping, ducts, main and branch fire suppression piping, junction boxes, and conduit.
   4. Exterior and interior items and surfaces not requiring painting, unless noted otherwise:
      a. Items with factory applied finishes.
      b. Moving parts of operating units.
      c. Code required labels or equipment identification plates.
      d. Acoustical ceilings.
   5. Field finish coating of shop or factory primed items. Refer to individual Sections for priming requirements.
   6. Finish coatings schedule.
   7. Preparation work and coatings specified in this Section are in addition to shop and factory applied finishes and surface treatment specified in other Sections.
   8. Refer to Divisions 21, 22, 23, and 26 for painting requirements for items in dedicated mechanical and electrical spaces.
   9. Paint all other items unless specifically indicated not to be painted.

B. Related Sections:
   1. Division 21 – Fire Suppression: Piping identification.
   2. Division 22 – Plumbing: Piping identification.
   3. Division 23 – Heating, Ventilating, and Air Conditioning: Mechanical identification.
   4. Division 26 – Electrical: Electrical identification.

1.2 DEFINITIONS

A. Conform to PDCA Glossary for interpretation of terms used in this Section except as modified below.

B. Exposed Surfaces: Surfaces of products, assemblies, and components visible from any angle after final installation. Includes internal surfaces visible when operable doors, panels or drawers are open, and surfaces visible behind registers, grilles, or louvers.

C. Concealed Surfaces: Surfaces permanently hidden from view in finished construction and which are only visible after removal or disassembly of part or all of product or assembly.

D. Inaccessible Spaces: Spaces not intended for human use.

E. Sheen: Degree of luster as measured with specular gloss meter in accordance with ASTM D523:

Flat:	85 degree meter	Below 15
Eggshell:	60 degree meter	5 to 20
Satin:	60 degree meter	15 to 35
Semi-gloss:	60 degree meter	30 to 65
Gloss:	60 degree meter	65 to 80
High Gloss:	60 degree meter	Over 80

F. System DFT: Dry film thickness of entire coating system unless otherwise noted.

05/03/13 PERMIT SET

1.3 SYSTEM REQUIREMENTS

A. Do not walk upon or stage from low roofs to paint walls above. Use bucket trucks to reach over low roofs.
   1. Asbestos: Existing corrugated siding and roofing are asbestos bearing materials.
   2. Lead Paint:
      a. Building dates prior to 1976 and it is assumed lead-based paint has been used on interior and exterior surfaces.
      b. Do not abrade, sand, or scuff existing painted surfaces.
      c. Powerwash surfaces to prepare for repainting.
      d. Special attention is required for repair of rusted surfaces.

B. Perform testing according to following methods:
   1. Solids Content by Volume: ASTM D2832.
   2. Surface Burning Characteristics: ASTM E84.

C. Interface with Adjacent Systems:
   1. Review other Sections specifying prime coats to ensure compatibility of total coating system for various substrates.
   2. Upon request from other trades, furnish information on characteristics of finish materials proposed for use to ensure compatibility of various coatings.
   3. Test compatibility of existing coatings, including shop applied primers and previously applied coatings, by applying specified special coating to small, inconspicuous area.
   4. If specified coating lifts or blisters existing coating, apply barrier or tie coat as recommended by coating manufacturer.
   5. If no compatible barrier or tie coat exists, remove existing coating completely and apply coating system as specified for new work.

1.4 SUBMITTALS

A. Product Data:
   1. Submit product data, including label analysis for each product proposed for use.
   2. Specifically include percent solids-by-volume, volatile organic compound (VOC) content (g/L), and lead content (percent of weight of dried film).
   3. Schedule:
      a. List each material proposed for use, and cross-reference to specific coating system and substrate application.
      b. Identify each material by manufacturer's catalog number, product name, and generic classification.
      c. Include typewritten list identifying coating systems and colors applied to each room, space, or item.

B. Color and Sheen Samples:
   1. Prepare 1 sample of each opaque finish coating specified in each color and sheen scheduled for appearance verification.
   2. Apply to 12 by 12 by 1/4 inch hardboard. Apply sufficient coating thickness to provide proper hiding and appearance.
   3. Label each sample to indicate material, color, and sheen.

C. Coating System Samples:
   1. Prepare 1 sample of each opaque coating system scheduled on actual substrate materials proposed for use. Apply in most common top coat color scheduled.
   2. Step back each coat and process at least one inch to show bare substrate and each coat and process in system build-up.
   3. Minimum sample size of 4 by 8 inches.
   4. Label each sample to indicate materials, color, sheen, DFT of each coat applied, and total system DFT.

D. Submit following Informational Submittals:
   1. Certifications specified in Quality Assurance article.
   2. Qualification Data: Applicator's qualification data.
   3. Manufacturer's instructions.

05/03/13 PERMIT SET

E. Closeout Submittals:
   1. Warranty: Submit specified warranty.

1.5 QUALITY ASSURANCE

A. Single Source Responsibility:
   1. Provide products of single manufacturer for use in each coating system.
   2. Do not mix products of different manufacturers without approval of Engineer and manufacturers involved.
   3. Provide manufacturer recommended materials (base and tints) for deep tone colors.

B. Applicator Qualifications: Company specializing in commercial painting and finishing with 3 years documented experience.

C. Regulatory Requirements:
   1. Comply with CPSC 16 CFR 1303 and other applicable federal, state, and local regulations limiting lead content of coatings to be applied.

D. Certifications: Submit certification from manufacturer that materials furnished for use on this Project meet or exceed specified requirements and comply with applicable federal, state, and local requirements regarding lead and VOC content.

1.6 FIELD SAMPLES

A. Sample Installation: Duplicate finishes of approved coating system samples on wall surfaces and other interior and exterior components selected by Engineer.

B. Provide full-coat finish on at least 100 sq ft of surface until required color, sheen, and texture are obtained. Simulate finished lighting conditions for review of in-place work.

C. Request review by Engineer of first finished room, space, or item for each coating system for color, texture, quality, and workmanship.

1.7 DELIVERY, STORAGE, AND HANDLING

A. Deliver, store, and handle products in accordance manufacturer’s instructions.

B. Deliver products to site in manufacturer's sealed and labeled containers; inspect to verify compliance with specified requirements.

C. Label containers to indicate manufacturer's name, product name and type of coating, brand code or stock number, date of manufacture, coverage, surface preparation, drying time, cleanup, color designation and instructions for mixing and reducing.

D. Store coating materials in tightly covered containers in well ventilated area at ambient temperatures of 45 degrees F minimum and 90 degrees F maximum, unless required otherwise by manufacturer. Maintain containers in clean condition, free of foreign materials and residue with labels in legible condition.

E. Take precautionary measures to prevent fire hazards and spontaneous combustion.

1.8 PROJECT CONDITIONS

A. Environmental Conditions: Comply with more restrictive of following or manufacturer's requirements under which systems can be applied.
   1. Provide continuous ventilation during application of coatings to exhaust hazardous fumes.
   2. Provide heating necessary to maintain surface and ambient temperatures within specified limits.
   3. Maintain temperature and humidity conditions for minimum 24 hours before, during, and 48 hours after application of finishes, unless longer times are required by manufacturer.
   4. Do not permit wide variations in ambient temperatures which might result in condensation on freshly coated surfaces.
   5. Provide illumination of not less than 80 footcandles measured mid-height at substrate surface during application of coatings.
   6. Apply water reducible coatings only when ambient and surface temperatures are between 50 degrees F and 90 degrees F.

7. Apply solvent reducible coatings only when ambient and surface temperatures are between 45 degrees F and 90 degrees F.
8. Do not apply coatings under any of following conditions:
   a. When surfaces are damp or wet.
   b. During rain, fog, or mist.
   c. When relative humidity is less than 20 percent or exceeds 85 percent.
   d. When temperature is less than 5 degrees F above dew point.
   e. When dust may be generated before coatings have dried.
   f. In direct sunlight.
   g. When wind velocity is above 20 mph.
9. Application of coatings may continue during inclement weather provided work areas and surfaces to be coated are enclosed and specified environmental conditions are maintained.

1.9 WARRANTY

A. Warrant installation to be free from defects in material and workmanship for 5 years.

B. Repair or replace defects occurring during warranty period.

C. Defects include but are not limited to pinholes, crazing or cracking, loss of adhesion to substrate, deficient thickness, improper materials and workmanship.

1.10 EXTRA STOCK MATERIAL

A. Provide 1 unopened gallon container of each type of opaque top coating in each color and sheen used on Project.

B. Store where directed with labels intact.

PART 2 - PRODUCTS

2.1 COATING MATERIALS - GENERAL

A. Coatings:
   1. Ready-mixed, factory tinted, best professional grade produced by manufacturer.
   2. Use manufacturer's appropriate base materials to achieve required colors.
   3. Fully grind pigments to maintain soft paste consistency in vehicle.
   4. Capable of being dispersed into uniform, homogeneous mixture.
   5. Possess good flowing and brushing properties.
   6. Capable of drying or curing free of streaks or sags, and yielding specified finish.
   7. VOC content of field applied coatings shall comply with local governing authorities.

B. Dry Erase Coatings:
   1. Clear finish revealing color below.
   2. Compatible with paint underlayment.
   3. Fast drying, high gloss, water soluble formula covers in one coat without need for primer.
   4. Low Volatile Organic Compound (VOC) content of 50 g/L as per EPA Test Method 24.
   5. Create very durable, long-lasting surface with 10,000+ scrub cycles and excellent stain removal.
   6. Class A rated for fire safety in accordance with ASTM E-84; classified as insignificant flammability hazard by the Hazardous Material Identification System.

C. Paint Maximum Product Emissions Limits: Top coat and primer interior paints must meet or not exceed the VOC (Volatile Organic Compounds) limits of the current requirements of Green Seal Standards GS-11 - Paints in the building, and Cal-GREEN Table 5.504.4.3 for VOC Content Limits for Architectural Coatings.

D. Cal-GREEN Requirements for typical paint coatings:
   1. Primers, Sealers, and Undercoaters: 100 grams per liter of product minus water
   2. Flats: 50 grams per liter of product minus water
   3. Non-flats: 100 grams per liter of product minus water
   4. Non-flat High Gloss: 150 grams per liter of product minus water

05/03/13 PERMIT SET

2.2 FINISH PAINTING SYSTEMS

A. General: System DFT specified identifies the minimum of the acceptable range.

B. Exterior Coating Systems:
   1. Corrugated siding and roofing:
   2. System No. EC-1 (Latex Finish):
      a. Sheen: Eggshell.
      b. Prime Coat: Alkali Resistant Primer at 1.5 mils.
      c. Under Coat: Exterior Latex House Paint at 1.5 mils.
      d. Top Coat: Exterior Latex House Paint at 1.5 mils.
      e. System DFT: 3.0 mils.

C. Metal Surfaces:
   1. Paint System No. PT-M2 (Latex Finish):
      a. Surface: Exterior non-ferrous metals and zinc-coated (galvanized) steel.
      b. Sheen: Semi-Gloss.
      c. Prime Coat: Universal Primer at 2.0 mils.
      d. Under Coat: Premium Acrylic Latex at 1.5 mils.
      e. Top Coat: Premium Acrylic Latex at 1.5 mils.
      f. System DFT: 5.0 mils.
   2. Paint System No. PT-M4 (Latex Finish):
      a. Surface: Interior non-ferrous metals and zinc-coated (galvanized) steel.
      b. Sheen: Semi-Gloss.
      c. Prime Coat: Universal Primer at 2.0 mils.
      d. Under Coat: Low-VOC interior latex/acrylic based paint at 1.4 mils.
      e. Top Coat: Low-VOC interior latex/acrylic based paint at 1.4 mils.
      f. System DFT: 4.8 mils
   3. Paint System No. PT-M8 (Latex Finish):
      a. Surface: Interior ferrous metals - uncoated.
      b. Sheen: Semi-Gloss.
      c. Prime Coat: Universal Primer at 3.0 mils.
      d. Under Coat: Low-VOC interior latex/acrylic based paint at 1.4 mils.
      e. Top Coat: Low-VOC interior latex/acrylic based paint at 1.4 mils.
      f. System DFT: 5.8 mils.
   4. Paint System No. PT-M10 (Latex Finish):
      a. Surface: Exterior ferrous metals - previously coated.
      b. Sheen: Semi-Gloss.
      c. Prime Coat: Touch-up existing with compatible primer.
      d. Under Coat: Exterior Premium Acrylic Latex Paint at 2.5 mils.
      e. Top Coat: Exterior Premium Acrylic Latex Paint at 2.5 mils.
      f. System DFT: 5.0 mils (excluding existing and touch-up primer).
   5. Paint System No. PT-M12 (Latex Finish):
      a. Surface: Interior ferrous metals - previously coated.
      b. Sheen: Semi-Gloss.
      c. Prime Coat: Touch-up existing with compatible primer.
      d. Under Coat: Low-VOC interior latex/acrylic based paint at 1.4 mils.
      e. Top Coat: Low-VOC interior latex/acrylic based paint at 1.4 mils.
      f. System DFT: 2.8 mils (excluding existing and touch-up primer).

D. Gypsum Board, MDF Base and Paint Grade Wood Door Surfaces:
   1. Paint System No. PT-G5 (Non VOC, Latex/Acrylic Finish):
      a. Surface: Interior gypsum board walls and ceilings; MDF base, and MDO paint grade wood doors.
      b. Sheen: Eggshell typical; semi-gloss in bathrooms, restrooms, and other wet areas.
      c. Prime Coat: Manufacturers standard Non VOC Primer at 1.0 mils.
      d. Under Coat: Low-VOC interior latex/acrylic based paint at 1.4 mils.
      e. Top Coat: Low-VOC interior latex/acrylic based paint at 1.4 mils.
      f. System DFT: 3.8 mils.

2.3 PRIMERS

A. Exterior Cal-GREEN Compliant Alkali Resistant Primer:
   1. Benjamin Moore: Regal Select Primer (546)
   2. Dunn-Edwards: Eff-Stop Primer(ESPR00)
   3. Glidden Professional: Bond Prep Sealer (3030)
   4. Sherwin-Williams: Loxon Masonry Primer (A24W8300)
   5. Vista: Uniprime II Acrylic Masonry Primer (4600)

B. Universal Metal Primer:
   1. Benjamin Moore: Acrylic Metal Primer (M04)
   2. Dunn-Edwards: Ultra Grip Premium ((UGPR00)
   3. Glidden Professional: Devoe Devflex DTM Primer (4020).
   4. Sherwin-Williams: Pro-Industrial Pro-Cryl Universal Primer (B66-310).
   5. Vista: Protec Primer (No. 9600).

C. Interior Low VOC Latex Primer:
   1. Benjamin Moore and Company: Natura Primer (511).
   2. Dunn-Edwards: ENSO Zero VOC Interior Primer (ENSO 00).
   3. Glidden Professional: Lifemaster No VOC Interior Primer (GP 9116).
   4. Sherwin-Williams: Harmony Primer (B11W900)
   5. Vista: Carefree Earth Coat Zero VOC Primer (6000)

2.4 WATER REDUCIBLE PAINTS

A. Exterior Premium Acrylic Latex House Paint:
   1. Benjamin Moore and Company:
      a. Flat: Regal Select Flat (400)
      b. Satin: Regal Select Low Luster (401)
      c. Semi-Gloss: Regal Select Soft Gloss (402)
      d. Gloss: NA
   2. Dunn-Edwards:
      a. Flat: Evershield Flat (EVSH10)
      b. Satin: Evershield Low Sheen (EVSH40-0).
      c. Semi-Gloss: Evershield Semi Gloss (EVSH50)
      d. Gloss: Evershield Gloss (EVSH60-0).
   3. Glidden Professional:
      a. Flat: Fortis 450 Flat (6201).
      b. Satin: Fortis 450 Satin (6403)
      c. Semi-Gloss: Fortis 450 Semi-Gloss (6407)
      d. Gloss: NA
   4. Sherwin-Williams:
      a. Flat: Duration Flat (K32).
      b. Satin: Duration (K33).
      c. Semi-Gloss: Metalatex SG (B42)
      d. Gloss: Duration (K34)
   5. Vista:
      a. Flat: Duratone (2000)
      b. Eggshell: Carefree 100% Acrylic Eggshell (8300)
      c. Semi-Gloss: Carefree 100% Acrylic Semi Gloss (8400)
      d. Gloss: Carefree 100% Acrylic Gloss (8500)

B. Low-VOC Interior Latex/Acrylic Based Paint:
   1. Benjamin Moore and Company:
      a. Flat, Natura Flat (512)
      b. Eggshell, Natura Eggshell (513)
      c. Semi-Gloss, Natura Semi-Gloss (514)

2. Dunn-Edwards:
   a. Flat: Enso Flat (ENSO 10)
   b. Eggshell: Enso Eggshell (ENSO 40)
   c. Semi-Gloss: Enso Semi Gloss (ENSO 50).
3. Glidden Professional:
   a. Flat: Lifemaster No VOC Flat (9100).
   b. Eggshell: Lifemaster No VOC Eggshell (9300).
   c. Semi-Gloss: Lifemaster No VOC Semi-Gloss (9200).
4. Sherwin-Williams:
   a. Flat: Harmony Flat (B5).
   b. Eggshell: Harmony Eggshell (B9)
   c. Semi-Gloss: Harmony Semi-Gloss (B10).
5. Vista;
   a. Flat: Carefree Earth Coat Zero VOC Flat (6100)
   b. Eggshell: Carefree Earth Coat Zero VOC Eggshell (6300)
   c. Semi-Gloss: Carefree Earth Coat Zero VOC Semi-Gloss (6400)

C. Dry Erase Coating:
   1. Basis of Design: Wink by Master Coating Technologies.
   2. Idea Paint by Glidden Professional.
   3. Color: Clear to show paint color below.

2.5 ACCESSORY MATERIALS

A. Muriatic acid, mildewcide, TSP (tri-sodium phosphate), acidic-detergent, zinc sulfate, sodium metasilicate, and solvent: Commercially available, non-damaging to surface being cleaned; as specified in PDCA Specification Manual; acceptable to coating manufacturer.

B. Metal Conditioner: Proprietary phosphoric acid based, etching type solution; acceptable to coating manufacturer.

C. Rust Inhibitor: Water containing 0.32 percent of sodium nitrite and 1.28 percent by weight of secondary ammonium phosphate (dibasic); or water containing 0.2 percent by weight of chromic acid or sodium chromate or sodium dichromate or potassium dichromate.

D. Spackling compound, putty, plastic wood filler, liquid de-glosser, latex patching plaster, latex base filler, thinners, and other materials not specifically indicated but required to achieve finishes specified: Pure, of highest commercial quality, compatible with coatings and acceptable to coating manufacturer.

E. Do not use products of different manufacturers in combination.

2.6 MIXING

A. Use factory prepared colors matching approved samples. Site tinting will not be permitted.

B. Thoroughly mix and stir coatings before use to ensure homogeneous dispersion of ingredients. Prior to application, blend multiple containers of same material and color by pouring from one container to another several times to ensure uniform consistency, color, and smoothness.

C. Mix only in clean mixing pails of material recommended by manufacturer to avoid contamination.

D. Remove film which may form on surface of material in containers and strain material before using. Stir frequently during use to maintain pigments in suspension. Do not stir film into material.

E. Apply coatings of consistency recommended by manufacturer. Thin only within recommended limits using thinners approved by coating manufacturer.

2.7 COLORS AND FINISHES

A. Colors: Refer to Drawings.

B. Sheen:
   1. Ceilings and Walls: Satin/Eggshell elsewhere unless noted otherwise.
   2. Ceilings and Walls in Wet Areas: Semi-Gloss, unless noted otherwise.
   3. Metal Doors and Frames: Semi-gloss, unless noted otherwise.
   4. Metals with accent colors – Semi-gloss, unless noted otherwise.

05/03/13 PERMIT SET

5. Painted Wood: Semi-gloss, unless noted otherwise.

PART 3 - EXECUTION

3.1 EXAMINATION

A. Examine conditions and proceed with work when substrates and environmental conditions are ready.

B. Measure moisture content of substrates using recently calibrated electronic moisture meter. Do not apply coatings if moisture content of surfaces exceeds lesser of percentages listed below or those required by coating manufacturer. If excess moisture content exists and cannot be reduced, obtain written approval of coating manufacturer before application of coatings.
   1. Gypsum board: 17 percent.
   2. Architectural woodwork, trim, cabinets, and casework: 10 percent; measure with resistance-type meter in accordance with ASTM D4442.
   3. Common board and dimension lumber: 12 percent; measure with resistance-type meter in accordance with ASTM D4442.
   4. Masonry, concrete, CMU, and Portland cement plaster: 17 percent for solvent reduced coatings. Test concrete floors in accordance with ASTM D4263.
   5. Canvas and cotton insulation coverings: 12 percent max.

C. Prior to applying alkali and acid sensitive coatings, test surface pH with universal pH paper placed against wetted surface. Substrate pH shall not exceed pH of clean wash water.

D. Beginning of execution constitutes acceptance of existing conditions.

3.2 PREPARATION - GENERAL

A. Protect completed construction from damage. Furnish drop cloths, shields, and protective methods to prevent spray, splatter, or droppings from disfiguring other surfaces.

B. Remove surface hardware, mechanical diffusers, escutcheons, registers, electrical plates, light fixture trim, fittings, fastenings and similar items prior to preparing surfaces for finishing. Provide surface-applied protective masking for non-removable items. Carefully store removed items for reinstallation.

C. Remove mildew by scrubbing with mildewcide. Rinse thoroughly with clean water.

D. Before beginning application of coatings, ensure surfaces are clean, dry, and free of dirt, dust, rust or rust scale, oil, grease, mold, mildew, algae, efflorescence, release agents, or any other foreign material which could adversely affect coating adhesion or finished appearance.

3.3 SURFACE PREPARATION FOR NEW WORK

A. General:
   1. Correct minor defects.
   2. Remove temporary labels, wrappings, and protective coverings from surfaces to be coated.
   3. Seal stains, marks, and other imperfections which may bleed through surface finishes.

B. Aluminum:
   1. Clean in accordance with SSPC SP1 "Solvent Cleaning".
   2. Apply etching type primer.

C. Cloth Insulation Coverings:
   1. Remove dirt, grease, oil, and other foreign substances.
   2. Seal with thin coating of drywall compound thinned with latex PVA primer to working consistency.

D. Concrete:
   1. Prior to application of coatings, allow surfaces to cure minimum 60 days.
   2. Remove dirt, scale, powder, laitance, and bond breakers by light sandblasting to minimum 1.5 mil profile.
   3. Remove oil and grease with solution of TSP; rinse well.
   4. Remove stains caused by weathering or corroding metals with solution of sodium metasilicate applied after thoroughly wetting surface with potable water; allow to dry.

05/03/13 PERMIT SET

5. Fill cracks and voids with compatible filler.

E. Gypsum Board:
1. Refer to Section 092900 for general surface preparation.
2. Fill remaining cracks, depressions, holes and other irregularities with spackling compound.
3. Sand rough or high spots left by joint cement or spackling compound without damaging paper face.
4. Remove dust by wiping with damp cloths or vacuuming.

F. Dry Erase Coating:
1. Surface shall be dry, prepared to Level 5 smoothness, and free of grease, mildew, and any imperfections.
2. Spray application of primers/sealers and base coat of paint preferred.
3. Scuff sanding recommended for high gloss surfaces.

G. Masonry:
1. Prior to application of coatings, allow surfaces to cure minimum 28 days.
2. Remove dirt, scale, loose mortar, efflorescence, and powder by wire brushing or by other approved methods.
3. Remove oil and grease with solution of TSP, rinse, and allow to dry.
4. Remove stains caused by weathering or corroding metals with solution of sodium metasilicate applied after thoroughly wetting surface with potable water; allow to dry.
5. Wash and neutralize surfaces as recommended by coating manufacturer, rinse, and allow to dry.

H. Steel - Uncoated:
1. Remove weld spatter by chipping or grinding.
2. Clean interior and weather protected steel in accordance with SSPC SP2 "Hand Tool Cleaning" and SP3 "Power Tool Cleaning". Clean areas of excessive corrosion or scale in accordance with SSPC SP7 "Brush-Off Blast Cleaning".
3. Clean exterior steel permanently exposed to elements in accordance with SSPC SP6 "Commercial Blast Cleaning".
4. Apply metal conditioner to bare surfaces in accordance with manufacturer's recommendations, paying particular attention to abrasions, welds, bolts, and nuts. Allow to set as recommended by solution manufacturer. Rinse with clean water with rust inhibitor mixed with water or applied immediately following rinse. Allow to dry.
5. Prime coat immediately.

I. Steel - Prime Coated:
1. Remove loose primer and rust to feather-edge at adjacent sound primer by cleaning in accordance with SSPC SP2 "Hand Tool Cleaning" and SP3 "Power Tool Cleaning".
2. Apply metal conditioner to abrasions, welds, bolts, and nuts in accordance with manufacturer's recommendations. Allow to set as recommended by manufacturer. Rinse with clean water with rust inhibitor mixed with water or applied immediately following rinse. Allow to dry.
3. Prime coat bare areas immediately.

J. Galvanized Steel: Remove soluble and insoluble contaminants and corrosion. Sweep (Abrasive) Blasting per ASTM D6386 to achieve a uniform anchor profile (1.0 - 2.0 mils).

3.4 SURFACE PREPARATION OF PREVIOUSLY COATED SURFACES

A. General:
1. Remove cracked and deteriorated sealants and calking.
2. Remove chalk deposits and loose, blistered, peeling, scaling, or crazed finish to bare base material or sound substrate by scraping and sanding.
3. Wash surfaces with solution of TSP to remove wax, oil, grease, and other foreign material; rinse, and allow to dry. Exercise caution that TSP solution does not soften existing coating.
4. Abrade glossy surfaces by sanding or wiping with liquid de-glosser.
5. Remove mildew as specified above.
6. Test compatibility of existing coatings by applying new coating to small, inconspicuous area. If new coatings lift or blister existing coatings, request recommendation from Engineer.

05/03/13 PERMIT SET

7. Apply specified primer to surfaces scheduled to receive coatings.

B. Concrete, Masonry, and corrugated siding:
1. Fill cracks and voids with latex base filler.
2. Apply masonry conditioner to masonry surfaces in accordance with manufacturer's instructions.
3. Apply primer over bare surfaces and filler material.

C. Gypsum Wallboard:
1. Fill cracks and voids with spackling compound.
2. Apply primer over bare surfaces and newly applied texture coatings.

D. Metal:
1. Remove rust from surfaces to bare metal in accordance with SSPC SP6 "Commercial Blast Cleaning".
2. Exercise care not to remove galvanizing.
3. Complete preparation as specified for new work.

3.5 APPLICATION

A. General Requirements:
1. Coat all surfaces specified, scheduled, illustrated, and otherwise exposed unless specifically noted otherwise.
2. Apply coatings of type, color, and sheen as scheduled.
3. Apply products in accordance with manufacturer's instructions. Use application materials, equipment, and techniques as recommended by coating manufacturer and best suited for substrate and type of material being applied.
4. Do not apply finishes to surfaces that are improperly prepared.
5. Number of coats specified are minimum number acceptable.
6. Apply coating systems to total dry film thickness scheduled. Apply material at not less than manufacturer's recommended spreading rate. Do not exceed maximum single coat thickness recommended by coating manufacturer. Do not double-back with spray equipment building up film thickness of two coats in one pass.
7. Ensure that edges, corners, crevices, welds, and exposed fasteners receive dry film thickness equivalent of flat surfaces.
8. Finish edges of coatings adjoining other materials or colors sharp and clean, without overlapping.

B. Prime Coats:
1. Apply initial coat to surfaces as soon as practical after preparation and before subsequent surface deterioration.
2. Backprime exterior woodwork with specified primer.
3. Backprime interior woodwork scheduled to receive transparent finish with gloss varnish reduced 25 percent with mineral spirits.
4. Apply primer to wood and metal sash before field glazing.

C. Intermediate and Top Coats:
1. Allow previously applied coat to dry before next coat is applied.
2. Sand and dust lightly between coats as recommended by coating manufacturer.
3. Apply each coat to achieve uniform finish, color, appearance, and coverage free of brush and roller marks, runs, misses, visible laps or shadows, hazing, bubbles, pin holes, or other defects.
4. If stains, undercoats, or other conditions show through final topcoat, correct defects and apply additional topcoats until coating film is of uniform finish, color, and appearance.

D. Dry Erase Coating: Apply with roller in accordance with manufacturer's written instructions over properly prepared, smooth, non-porous painted surfaces.

E. Finish Matching:
1. Finish closets same as adjoining rooms, unless otherwise specified.
2. Finish tops, bottoms, and edges of doors same as door faces. Apply sanding sealer to cut-outs. When faces are different colors, finish edges of doors to match space from which they are visible when door is in partly open position.

05/03/13 PERMIT SET

3. Finish other surfaces not specifically mentioned to match adjoining surfaces.

F. Mechanical and Electrical Items:
1. Refer to Division 21 – Fire Suppression, Division 22 – Plumbing, Division 23 - Heating, Ventilating, and Air Conditioning, and Division 26 - Electrical for schedule of color coding and identification banding of equipment, ductwork, piping, and conduit. Color code equipment, piping, conduit and exposed ductwork in accordance with requirements indicated.
2. Prior to finishing mechanical and electrical items, remove louvers, grilles, covers, and access panels and finish separately. Replace when dry.
3. Paint interior surfaces of ducts, and heating cabinets that are visible or reflective behind grilles and registers with one coat of flat black paint.
4. Finish dampers visible behind grilles and registers to match surface finish.
5. Paint both sides and edges of plywood equipment backboards before installing equipment.
6. Do not apply coatings over name plates, tags, or other equipment identification.

G. Reinstall trim, fittings, and other items removed for finishing.

3.6 FIELD QUALITY CONTROL

A. Periodically test film thickness of each coat with wet film gage to ensure coatings are being applied to proper thickness.

B. Request review of each applied coat by Engineer before application of successive coats. Only reviewed coats will be considered in determining number of coats applied.

C. Immediately prior to Substantial Completion, perform detailed inspection of painted surfaces and repair or refinish abraded, stained, or otherwise disfigured surfaces.

D. Testing: Owner reserves right to employ independent testing agency to verify acceptability of substrates and conformance of coating materials to specified requirements; and to test coating quality and dry film thickness.

E. If test results show that material does not comply with specified requirements, remove noncomplying coatings, recoat with acceptable material, and pay costs of additional testing to ensure compliance.

3.7 CLEANING

A. Promptly remove spilled, splashed, or spattered coatings. Clean spots, oil, and other soiling from finished surfaces using cleaning agents and methods which will not damage materials.

B. If completed construction is damaged beyond normal cleaning or repair by painting operations, replace damaged items at no additional cost to Owner.

C. Maintain premises and storage areas free of unnecessary accumulation of tools, equipment, surplus materials, and debris.

D. Collect waste, cloths, and material which may constitute fire hazards and place in closed metal containers; remove from site daily along with empty containers.

3.8 PROTECTION

A. Protect finished work.

B. Protect work of other trades against damage from coating activities. Correct damage by cleaning, repairing, replacing, and recoating as acceptable to Engineer.

C. Provide "Wet Paint" signs and other methods to protect newly coated surfaces. Remove when directed or when no longer needed.

END OF SECTION

05/03/13 PERMIT SET

SECTION 099600

HIGH PERFORMANCE COATINGS

PART 1 - GENERAL

1.1 SUMMARY

A. Section Includes: Exterior Coatings for:
   1. Exterior ferrous metal on Entry Canopy.
   2. Other steel items as identified.

1.2 DEFINITIONS

A. DFT: Dry film thickness.

B. Sheen: Degree of luster as measured with specular gloss meter in accordance with ASTM D523:

1.	Flat:	85 degree meter	Below 15
2.	Eggshell:	60 degree meter	5 to 20
3.	Satin:	60 degree meter	15 to 35
4.	Semi-gloss:	60 degree meter	30 to 65
5.	Gloss:	60 degree meter	65 to 80
6.	High Gloss:	60 degree meter	Over 80

1.3 SYSTEM REQUIREMENTS

A. Testing Requirements: Test according to following methods.
   1. Abrasion: ASTM D4060.
   2. Adhesion: ASTM D3359, D4541.
   3. Humidity: ASTM D4585.
   4. Salt Spray (Fog): ASTM B117.
   5. Solids Content by Volume: ASTM D2832.
   6. Surface Burning Characteristics: ASTM E84.
   7. Volatile Organic Compound Content: EPA TM-24 (40 CFR 60, Appendix A).

B. Application Requirements: Apply scheduled coatings to exposed surfaces of items scheduled and otherwise indicated unless specifically noted otherwise.

C. Interface with Adjacent Systems:
   1. Review other Sections specifying prime coats to ensure compatibility of total coating system for various substrates.
   2. Upon request from other trades, furnish information on characteristics of finish materials proposed for use to ensure compatibility of various coatings.
   3. Test compatibility of existing coatings, including shop applied primers and previously applied coatings, by applying specified coating to small, inconspicuous area.
   4. If coating lifts or blisters existing coating, apply barrier or tie coat as instructed by coating manufacturer.
   5. If no compatible barrier or tie coat exists, remove existing coating completely and apply coating system as specified for new work.

1.4 SUBMITTALS

A. Product Data:
   1. Submit product data including label analysis for each product proposed for use.
   2. Specifically include percent solids-by-volume, volatile organic compound (VOC) content lb/gal, and lead content (percent of weight of dried film).
   3. Schedule:
      a. List each material proposed for use. Cross-reference to specific coating system and substrate application.
      b. Identify each material by manufacturer's catalog number, product name, and generic classification.

05/03/13 PERMIT SET

B. Coating System Samples:
   1. Prepare 1 sample of each coating system scheduled on actual substrate materials proposed for use.
   2. Provide sample for each top coat color scheduled.
   3. Step back each coat at least one inch to show bare substrate and each coat in system build-up.
   4. Minimum sample size of 4 by 8 inches.
   5. Label each sample to indicate materials, color, sheen, DFT of each coat applied, and total system DFT.

C. Submit following Informational Submittals:
   1. Test Reports: Indicate compliance with specified performance requirements.
   2. Certifications specified in Quality Assurance article.
   3. Qualification Data: Manufacturer's and applicator's qualification data.
   4. Manufacturer's Instructions: Include mixing, thinning, and curing requirements; application temperature ranges; and required surface preparation.

D. Closeout Submittals:
   1. Warranty: Submit specified warranty.

1.5 QUALITY ASSURANCE

A. Single Source Responsibility: Provide products of single manufacturer for use in each coating system. Do not mix products of different manufacturers without approval of Engineer and manufacturers involved.

B. Manufacturer Qualifications: Company specializing in manufacturing products specified in this Section with minimum 5 years documented experience.

C. Applicator Qualifications: Company specializing in application of coatings scheduled with 3 years documented experience; licensed or approved by coating manufacturer.

D. Regulatory Requirements: Comply with CPSC 16 CFR 1303 and other applicable federal, state, and local regulations limiting lead content of coatings to be applied.

E. Certifications: Submit certification from manufacturer that materials furnished for use on this Project meet or exceed specified requirements and comply with applicable federal, state, and local requirements regarding lead and VOC content.

1.6 DELIVERY, STORAGE, AND HANDLING

A. Deliver, store, and handle products in accordance manufacturer’s instructions.

B. Deliver products to site in manufacturer's sealed and labeled containers; inspect to verify compliance with specified requirements.

C. Label containers to indicate manufacturer's name, product name and type of coating, brand code or stock number, date of manufacture, coverage, surface preparation, drying time, cleanup, color designation, and instructions for mixing and reducing.

D. Store coating materials in tightly covered containers in well ventilated area at ambient temperatures of 45 degrees F minimum and 90 degrees F maximum, unless required otherwise by manufacturer. Maintain containers in clean condition, free of harmful materials and residue with labels in legible condition.

E. Take precautionary measures to prevent fire hazards and spontaneous combustion.

1.7 PROJECT CONDITIONS

A. Environmental Conditions: Comply with more restrictive conditions under which coatings may be applied; following requirements or manufacturer's requirements.
   1. Provide continuous ventilation during application of coatings to exhaust hazardous fumes.
   2. Provide heating necessary to maintain surface and ambient temperatures within specified limits.
   3. Maintain temperature and humidity conditions for minimum 24 hours before, during, and 48 hours after application of finishes.

4. Do not permit wide variations in ambient temperatures which might result in condensation on freshly coated surfaces.
5. Provide illumination of not less than 80 footcandles measured mid-height at substrate surface during application of coatings.
6. Apply coatings only when ambient and surface temperatures are between 55 degrees F and 90 degrees F.
7. Do not apply coatings under following conditions:
   a. When surfaces are damp and wet.
   b. During snow, rain, fog, and mist.
   c. When relative humidity is less than 20 percent or exceeds 85 percent.
   d. When temperature is less than 5 degrees F above dew point.
   e. When dust may be generated before coatings have dried.
   f. In direct sunlight.
   g. When wind velocity is above 20 mph.
8. Application of coatings may continue during inclement weather provided work areas and surfaces to be coated are enclosed and specified environmental conditions are maintained.

1.8 WARRANTY

A. Warrant against defects in material and workmanship for 5 years.

B. Repair or replace defects occurring during warranty period.

C. Defects include but are not limited to holidays, wrinkling, pinholes, crazing and cracking, loss of adhesion to substrate, deficient thickness, improper materials and workmanship.

PART 2 - PRODUCTS

2.1 MANUFACTURERS

A. Acceptable Manufacturers:
   1. Tnemec Company, Inc., Kansas City, MO.
   2. Carboline Comany, Saint Louis, MO.

2.2 COATING MATERIALS - GENERAL

A. Coatings:
   1. Furnish coatings with uniform, homogeneous mixture.
   2. Provide cured coating free of streaks and sags, and yielding specified finish.

B. Paint Maximum Product Emissions Limits: Top coat and primer interior paints must meet or not exceed the VOC (Volatile Organic Compounds) limits of the current requirements of Cal-GREEN Table 5.504.4.3 for VOC Content Limits for Architectural Coatings.

C. Cal-GREEN Requirements for typical high performance coatings:
   1. Primers, Sealers, and Undercoaters: 100 grams per liter of product minus water
   2. Industrial Maintenance Coatings: 250 grams per liter of product minus water
   3. Non-flats: 100 grams per liter of product minus water
   4. Non-flat High Gloss: 150 grams per liter of product minus water.

2.3 HIGH-PERFORMANCE COATINGS SCHEDULE

A. Coating System - Exterior Galvanized and Non-Ferrous Metals.
   1. Color and Sheen: Refer to color schedule.
   2. Prime Coat: P2 Epoxy, DFT 4 mil.
   3. Intermediate Coat: P2 Epoxy, DFT 4 mil.
   4. Top Coat: U1 Polyurethane, DFT 5 mil.
   5. Total DFT: 13 mil.

B. Coating System - Exterior Non-Galvanized Steel.
   1. Color and Sheen: Refer to color schedule.
   2. Prime Coat: P1 Zinc Rich Primer, DFT 3 mil.
   3. Intermediate Coat: P2 Epoxy, DFT 4 mil.
   4. Top Coat: U1 Polyurethane, DFT 5 mil.

5. Total DFT: 12 mil.

2.4 PRIMERS

A. Type P1 - Organic Zinc-Rich Primers:
   1. Manufacturers and Products:
      a. Tnemec Company, Inc.: 94H_2O Hydro-Zinc.
      b. Carboline Company, Carbozinc 859 VOC,
   2. Physical Requirements:
      a. Solids content by volume: 63 percent minimum.
      b. Metallic zinc content: 83 percent minimum.
      c. VOC Content (Unthinned): 96 g/L.
   3. Performance Requirements:
      a. General: Tests are based on one coat at manufacturer's recommended DFT.
      b. Adhesion: ASTM D4541, not less than 1500 psi pull, average of three trials.
      c. Salt Spray (Fog): ASTM B117, no blistering, cracking, softening, or delamination of film. No more than 1 percent rust on plane and no more than 1/4 inch rust creepage at scribe and no rusting at edges after 20,000 hours exposure.

B. Type P2 - Intermediate Coating:
   1. Manufacturers and Products:
      a. Tnemec Company, Inc.: Series L69 Epoxoline II.
      b. Carboline Company: Carboguard 890 EF.
   2. Physical Requirements:
      a. Solids Content by Volume: 67 percent minimum.
      b. VOC Content (Unthinned): 98 g/L.
   3. Performance requirements:
      a. General: Tests are based on one coat at manufacturer's recommended DFT.
      b. Adhesion: ASTM D4541, not less than 900 psi pull, average of five trials.
      c. Salt Spray (Fog): ASTM B117, no blistering, cracking, softening, or delamination of film. No more than 1/32 inch rust creepage at scribe after 1500 hours exposure.

2.5 POLYURETHANE COATINGS

A. Type U1 - High Build Acrylic Polyurethane Coatings:
   1. Locations: Exterior steel items and interior Feature Stair.
   2. Manufacturers and Products:
      a. Tnemec Company, Inc.: Series 750 UVX
      b. Carboline Company: Carbothane 134 VOC, gloss.
   3. Physical Requirements:
      a. Solids Content by Volume: 57 percent minimum.
      b. Sheen: Semi-gloss.
      c. VOC Content (Unthinned): 99 g/L.

2.6 ACCESSORY MATERIALS

A. Cleaners:
   1. General: Mildewcide, TSP (tri-sodium phosphate), acidic-detergent, zinc sulfate, sodium metasilicate, and solvents:
   2. Commercially available.
   3. Non-damaging to surface being cleaned
   4. Complying with PDCA Specification Manual.
   5. Acceptable to coating manufacturer.

B. Metal Conditioner: Proprietary phosphoric acid based, etching type solution; acceptable to coating manufacturer.

C. Rust Inhibitor:
   1. Water containing 0.32 percent by weight of sodium nitrite and 1.28 percent by weight of secondary ammonium phosphate (dibasic).

05/03/13 PERMIT SET

2. Water containing 0.2 percent by weight of chromic acid, sodium chromate, sodium dichromate, or potassium dichromate.

D. Spackling compound, putty, fillers, liquid de-glosser, patching plaster, thinners, and materials not indicated but required to achieve finishes. Compatible with coating system and acceptable to coating manufacturer.

E. Do not use products of different manufacturers in combination, unless approved by each manufacturer of products involved.

2.7 MIXING

A. Use factory prepared colors matching approved samples. Site tinting will not be permitted.

B. Thoroughly mix and stir coating components before use to ensure homogeneous dispersion of ingredients. Prior to application, blend multiple containers of same material and color by pouring from one container to another several times to ensure uniform consistency, color, and smoothness.

C. Mix in clean pails of material recommended by manufacturer to avoid contamination.

D. Mix only enough of multi-part coatings to allow application within pot life of mixture.

E. Remove film which may form on surface of material in containers and strain material before using. Stir frequently during use to maintain pigments in suspension. Do not stir film into material.

F. Apply coatings of consistency instructed by manufacturer.

G. Thinning:
1. Provide thinners approved by coating manufacturer.
2. Add thinners within manufacturer recommended limits.

2.8 COLORS AND SYSTEMS

A. Colors: Custom color coating as selected by Engineer.

PART 3 - EXECUTION

3.1 EXAMINATION

A. Examine conditions and proceed with Work when substrates and environmental conditions are acceptable.

B. Measure moisture content of surfaces using recently calibrated electronic moisture meter. Do not apply coatings if moisture content of surfaces exceeds lesser of percentages listed below or those required by coating manufacturer. If excess moisture content exists and cannot be reduced, obtain written approval of coating manufacturer before application of coatings.
1. Gypsum board and gypsum plaster: 17 percent.
2. Masonry, Concrete, CMU, and Portland Cement Plaster: 17 percent for solvent reduced coatings. Test concrete floors in accordance with ASTM D4263.

C. Prior to applying alkali and acid sensitive coatings, test substrate pH. Substrate pH shall not exceed pH tolerance recommended by manufacture.

3.2 PREPARATION

A. Protect completed construction from damage. Furnish drop cloths, shields, and protective methods to prevent spray, splatter or droppings from disfiguring other surfaces.

B. Remove surface hardware, mechanical diffusers, escutcheons, registers, electrical plates, light fixture trim, fittings, fastenings and similar items prior to preparing surfaces for finishing. Provide surface-applied protective masking for non-removable items. Carefully store removed items for reinstallation.

C. Remove mildew by scrubbing with mildewcide. Rinse thoroughly with clean water.

D. Before beginning application of coatings, ensure surfaces are clean, dry, and free of dirt, dust, rust, and rust scale, oil, grease, mold, mildew, algae, efflorescence, release agents and other harmful materials which could adversely affect coating adhesion and finished appearance.

3.3 SURFACE PREPARATION FOR NEW WORK

A. General:
1. Correct minor defects.
2. Remove temporary labels, wrappings, and protective coverings from surfaces to be coated.
3. Seal stains, marks, and other imperfections which may bleed through surface finishes.

B. Steel - Unprimed:
1. Remove weld spatter by chipping or grinding.
2. Clean interior and weather protected steel in accordance with SSPC SP7, "Brush-Off Blast Cleaning".
3. Clean exterior steel permanently exposed to elements in accordance with SSPC SP6 "Commercial Blast Cleaning".
4. Apply primer, or metal conditioner to bare surfaces in accordance with coating schedule, paying particular attention to abrasions, welds, bolts, and nuts. Allow to set as recommended by manufacturer.

C. Steel - Shop Prime Coated:
1. Remove loose shop primer and rust; sand to feather-edge at adjacent sound primer by cleaning in accordance with SSPC SP2 "Hand Tool Cleaning" and SP3 "Power Tool Cleaning".
2. Apply primer or metal conditioner to abrasions, welds, bolts, and nuts in accordance with coating schedule. Allow to set as instructed by manufacturer. Rinse with clean water with rust inhibitor mixed-in or applied primer or metal conditioner immediately following rinse. Allow to dry.
3. Prime coat bare areas immediately.
4. Apply specified primer to bare steel and previously primed steel surfaces scheduled to receive high performance coatings.

D. Galvanized Steel: Remove soluble and insoluble contaminants and corrosion. Sweep (Abrasive) Blasting per ASTM D6386 to achieve a uniform anchor profile (1.0 - 2.0 mils).

3.4 SURFACE PREPARATION OF PREVIOUSLY APPLIED COATED SURFACES

A. General:
1. Remove cracked and deteriorated sealants and calking.
2. Remove chalk deposits and loose, blistered, peeling, scaling, or crazed finish to bare base material or sound substrate by scraping and sanding.
3. Wash surfaces with solution of TSP to remove wax, oil, grease, and other harmful material; rinse, and allow to dry. Exercise caution so TSP solution does not soften existing coating.
4. Abrade glossy surfaces by sanding or wiping with liquid de-glosser.
5. Test compatibility of existing coatings by applying new coating to small, inconspicuous area in accordance with ASTM D3359. If new coatings lift or blister existing coatings, request recommendation from Engineer.
6. Apply specified primer to surfaces scheduled to receive coatings.

B. Metal:
1. Remove rust from surfaces to bare metal in accordance with SSPC SP6 "Commercial Blast Cleaning".
2. Exercise care not to remove galvanizing.
3. Complete preparation as specified for new work.

3.5 APPLICATION

A. General:
1. Coat surfaces specified, scheduled, illustrated, and otherwise identified unless specifically noted otherwise.
2. Apply coatings of type, color, and sheen as scheduled.
3. Apply products in accordance with manufacturer's instructions. Use application materials, equipment, and techniques as instructed by coating manufacturer and best suited for substrate and type of material being applied.
4. Do not apply finishes to surfaces that are improperly prepared.

05/03/13 PERMIT SET

5. Quantify of coats specified are minimum quantify acceptable.
6. Apply coating systems to achieve scheduled total dry film thickness.
7. Apply material at not less than manufacturer's instructed spreading rate.
8. Do not exceed maximum single coat thickness instructed by coating manufacturer.
9. Do not double-back with spray equipment building up film thickness of two coats in one pass.
10. Ensure that edges, corners, crevices, welds, and exposed fasteners, receive dry film thickness equivalent of flat surfaces.
11. Finish edges of coatings adjoining other materials and colors sharp and clean manner, without overlapping.

B. Prime Coats:
1. Apply initial coat to surfaces as soon as practical after preparation and before subsequent surface deterioration.
2. Apply primer to sash before glazing.

C. Intermediate and Top Coats:
1. Allow previously applied coat to dry before next coat is applied.
2. Sand and dust lightly between coats as recommended by coating manufacturer.
3. Apply each coat to achieve uniform finish, color, appearance, and coverage free of brush and roller marks, runs, misses, visible laps and shadows, hazing, bubbles, pin holes, and other defects.
4. If stains, undercoats, and other conditions show through final topcoat, correct defects and apply additional topcoats until coating film is of uniform finish, color, and appearance.

D. Mechanical and Electrical Items:
1. Refer to Division 25 - Mechanical and Division 26 - Electrical for schedule of color coding and identification banding of equipment, ductwork, piping, and conduit. Color code equipment, piping, conduit and exposed ductwork in accordance with requirements indicated.
2. Prior to finishing mechanical and electrical items; remove and finish separately louvers, grilles, covers, and access panels. Replace when dry.
3. Do not apply coatings over name plates, tags, and other equipment identification.

E. Replace trim, fittings, and other items removed for finishing.

3.6 FIELD QUALITY CONTROL

A. Periodically test film thickness of each coat with wet film gage to ensure coatings are being applied to proper thickness.

B. Request review of each applied coat by Engineer and manufacturer's representative before application of successive coats. Only reviewed coats will be considered in determining number of coats applied.

C. Immediately prior to Substantial Completion, perform detailed inspection of coated surfaces and repair or refinish abraded, stained, and otherwise disfigured surfaces.

D. Testing: Owner reserves right to employ independent testing agency to verify acceptability of substrates and conformance of coating materials to specified requirements; and to test coating quality and dry mil thickness.

E. If test results show that material does not comply with specified requirements, remove noncomplying coatings, recoat with complying material, and pay costs of additional testing to ensure compliance.

3.7 CLEANING

A. Promptly remove spilled, splashed, and spattered coatings. Clean spots, oil, and other soiling from finished surfaces using cleaning agents and methods which will not damage materials.

B. If completed construction is damaged beyond normal cleaning and repair by coating operations, replace damaged items at no additional cost to Owner.

C. Maintain premises and storage areas free of unnecessary accumulation of tools, equipment, surplus materials, and debris.

05/03/13 PERMIT SET

D. Collect waste, cloths, and material which may constitute fire hazards and place in closed metal containers; remove from site daily along with empty containers.

3.8 PROTECTION

A. Protect work of other trades against damage from coating activities. Correct damage by cleaning, repairing, replacing, and recoating as acceptable to Engineer.

B. Provide "Wet Paint" signs and other methods to protect newly coated surfaces. Remove when directed or when no longer needed.

END OF SECTION

05/03/13 PERMIT SET

SECTION 101400

EXTERIOR SIGNAGE

PART 1 - GENERAL

1.1 SUMMARY

A. Section Includes: Custom Length LED Exterior Signage

B. Related Sections:
   1. Section 260501 – Electrical General Provisions
   2. Section 262726 – Wiring Devices
   3. Section 265000 – Luminaires and Accessories

1.2 SYSTEM REQUIREMENTS

A. The Contractor is responsible for the fabrication of all components and materials and the installation of systems.

B. Provided signage shall be of the same manufacturer throughout installation.

C. Integrate design and connections with adjacent construction.

D. Equipment shall be certified for use in the State of California and shall meet the California Energy Code and local energy ordinances.

E. Refer to Architectural Drawings for design intent. Dimensions relative to location and spacing to be verified with existing conditions prior to fabrication and installation.

F. Fixtures included in the specification are included as basis of design. Engineer to approve alternate equal fixture as applicable.

1.3 SUBMITTALS

A. Product Data:
   1. Submit product data for LED System.

B. Shop Drawings:
   1. Submit shop drawings created by installer of design, fabrication, and installation of systems.
   2. Show details and other components not included in manufacturer's standard data.
   3. Include wall elevations, location plans, and detail sections.

C. Samples:
   1. Submit samples indicating product. The sample should indicate light source, sockets, and conductors and other components of a complete system.
   2. Mock-ups TBD.

D. Closeout Submittals:
   1. Submit under provisions of Section 017800.
   2. Warranty: Submit specified warranty.

1.4 MANUFACTURERS

A. Basis of Design: Tokistar Lightstring (or approved equivalent) with custom spacing per Architectural Drawings.

05/03/13 PERMIT SET

PART 2 - EXECUTION

2.1 EXAMINATION

A. Examine conditions and proceed with work when substrates are ready.

2.2 INSTALLATION

A. Install in accordance with manufacturer's instructions, details and approved shop drawings.

B. Verify dimension with existing field conditions.

C. Refer to Division 1 of this specification for recommended practices pertinent to this project.

END OF SECTION

05/03/13 PERMIT SET

TOKISTAR

Lightstrings

TOKISTAR LIGHTING INC.

05/03/13 PERMIT SET

Lightstrings

TOKISTAR® Lightstrings are a system of sockets wired in parallel and permanently attached to flexible, commercial-grade wiring. Light sources include energy-efficient TokiLeds, LEDs with full-range viewing. Our "smart" Kinetic TokiLeds add unique animated effects.

All-weather construction ensures the integrity of installations will be maintained in all environments. For protection in wet locations, LEDs are provided with Tokistar's protective silicone caps.

Shadowed branches and limbs wrapped in our Lightstrings fill the silhouettes of trees with dramatic points of light.

Channel letters, signs and display panels are easily and effectively illuminated using Lightstrings.

Socket spacing is greater than hole spacing to provide a small slack of wire between each socket.

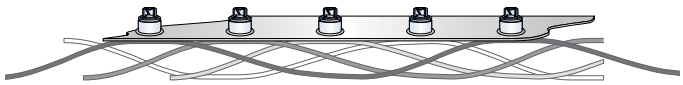

Multiple Lightstrings can be arranged to create animated lighting effects.

Specifications

Wet-Location Listed

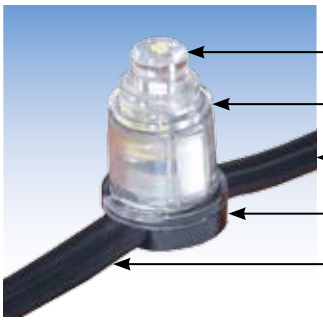

Light Sources include TokiLeds and Kinetic TokiLeds

Polycarbonate Sockets with flammability rating UL 94V-0

Flexible Conductors are plated #18 AWG

Sockets are soldered and ultrasonically bonded to cable

Insulation is flexible PVC with flammability rating UL 94 HB

How to Specify

FLBK - 60 - WW - WP

Select the appropriate cable color, socket spacing and LED for the application. For outdoor applications, include the ordering code for silicone caps.

Lightstring Color		Socket Spacing	
Code	Color	Code	Inches (mm)
FLBK	Black	**60**	2.40" (60 mm)
FLWG*	Warm Grey	**110**	4.25" (110 mm)
FLGR*	Green	**160**	6.25" (160 mm)
*Warm Grey and Green available in 6.25" and 12.25" only		**210**	8.25" (210 mm)
		310	12.25" (310 mm)
		410	16.25" (410 mm)

TokiLeds		
Code	Color	Watts/Volts
WW	2400K White	0.1 W / 8 VDC
IW	3000K White	0.1 W / 8 VDC
WH	6500K White	0.1 W / 8 VDC
WW-HB	2400K White	0.2 W / 8 VDC
IW-HB	3000K White	0.2 W / 8 VDC
WH-HB	6500K White	0.2 W / 8 VDC
WW-UB	2400K White	0.4 W / 8 VDC
IW-UB	3000K White	0.4 W / 8 VDC
WH-UB	6500K White	0.4 W / 8 VDC
KLED-FF	3000K White	0.2 W / 8 VDC
KLED-SF	3000K White	0.2 W / 8 VDC
KLED-CF	3000K White	0.2 W / 8 VDC
AM	Amber	0.1 W / 8 VDC
BL	Blue	0.1 W / 8 VDC
GR	Green	0.1 W / 8 VDC
MG	Magenta	0.1 W / 8 VDC
PL	Purple	0.1 W / 8 VDC
RD	Red	0.1 W / 8 VDC

Optional Cap	
Code	Description
WP	Silicone Cap

Silicone Caps provide protection in all environments.

TOKILEDS®

TokiLeds are durable, energy efficient and cost effective. Their unique phosphor-coated lens reflects light in all directions, resulting in full-range viewing.

White TokiLeds do an outstanding job of emulating true incandescent light. Our selection includes a variety of color temperatures and brightness levels.

2400K 3000K 6500K

Select from a wide range of vibrant colors.

Amber Blue Green Magenta Purple Red

TokiLeds			
Part Number	LED Color	Watts/Volts	Amps
TLED-WW	2400K White	0.1 W / 8 VDC	12.5 mA
TLED-IW	3000K White	0.1 W / 8 VDC	12.5 mA
TLED-WH	6500K White	0.1 W / 8 VDC	12.5 mA
TLED-WW-HB	2400K White	0.2 W / 8 VDC	25.0 mA
TLED-IW-HB	3000K White	0.2 W / 8 VDC	25.0 mA
TLED-WH-HB	6500K White	0.2 W / 8 VDC	25.0 mA
TLED-WW-UB	2400K White	0.4 W / 8 VDC	50.0 mA
TLED-IW-UB	3000K White	0.4 W / 8 VDC	50.0 mA
TLED-WH-UB	6500K White	0.4 W / 8 VDC	50.0 mA
TLED-AM	Amber	0.1 W / 8 VDC	12.5 mA
TLED-BL	Blue	0.1 W / 8 VDC	12.5 mA
TLED-GR	Green	0.1 W / 8 VDC	12.5 mA
TLED-MG	Magenta	0.1 W / 8 VDC	12.5 mA
TLED-PL	Purple	0.1 W / 8 VDC	12.5 mA
TLED-RD	Red	0.1 W / 8 VDC	12.5 mA

Kinetic TokiLeds

Kinetic TokiLeds include a microchip to create self-actuated flashing or cross-fading effects. Each LED operates independently for a totally random appearance. Kinetic TokiLeds do not require a controller, adding to the system's cost efficiency and reliability. They may also be mixed with static LEDs on the same fixture.

Kinetic TokiLeds			
Part Number	Effect	Color	Watts/Volts
KLED-FF	Fast Flash / 4 Hz	3000K White	0.2 W / 8 VDC
KLED-SF	Slow Flash / 0.5 Hz	3000K White	0.2 W / 8 VDC
KLED-CF	Cross-Fade	3000K White	0.2 W / 8 VDC

Flashing

For twinkling effects, the cycle is 0.5 Hz. For faster scintillating effects, the cycle is 4 Hz.

Fading

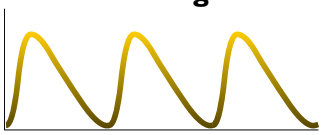

Cross-Fading LEDs smoothly ramp up to full brightness, then gradually fade to off.

LED Drivers

Tokistar's LDR8-40 is a 40 Watt Class 2 LED Driver used to convert an AC input into an 8 VDC output. It may be operated from a wide range of input voltages. The enclosure is suitable for wet locations.

LDR8-40

Specifications
Input Range: 100~240 VAC
Frequency Range: 50/60 Hz
Output: 8 VDC (Adjustable +10% / -25%)
Max. Output Current: 5.0A
Max. Output Power: 40W
Protection: Overload, Overcurrent, Short Circuit
Operating Temperature: -30°C to +60°C

Mechanical Specifications
Dimensions: 3" x 9.75" x 2"
Weight: 1.94 lbs
Enclosure Rating: Nema 3/IP65
Mounting: Flange Mount
Connection: Knockouts for 1/2" Conduit

LED Capacity
0.10 Watt LEDs: 400 pieces
0.20 Watt LEDs: 200 pieces
0.40 Watt LEDs: 100 pieces

Tokistar's LDR8-80 is a dual output Class 2 LED Driver with two independent 40 Watt outputs. It may be operated from a wide range of input voltages. The enclosure is suitable for wet locations.

LDR8-80

Specifications
Input Range: 100~240 VAC
Frequency Range: 50/60 Hz
Output: 8 VDC (Adjustable +5% / -30%)
Max. Output Current: 10.0A (2 @ 5.0A)
Max. Output Power: 80W (2 @ 40W)
Protection: Overload, Overcurrent, Short Circuit
Operating Temperature: -30°C to +60°C

Mechanical Specifications
Dimensions: 3.6" x 11" x 2.25"
Weight: 4 lbs
Enclosure Rating: Nema 3/IP65
Mounting: Flange Mount
Connection: Knockouts for 1/2" Conduit

LED Capacity
0.10 Watt LEDs: 800 pieces
0.20 Watt LEDs: 400 pieces
0.40 Watt LEDs: 200 pieces

Sizes and Lengths

To minimize voltage drop and keep conductors safely within their rating, do not exceed the maximum lengths shown for each independent fixture. The low power consumption of Tokistar's energy-efficient LEDs permits longer fixture lengths.

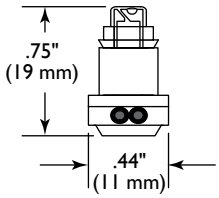

TokiLed
0.10 and 0.20 watt

	Maximum Run Lengths		
Spacing	0.1 Watt LED	0.2 Watt LED	0.4 Watt LED
2.40" (60 mm)	63' (19 M)	40' (12 M)	20' (6 M)
4.25" (110 mm)	84' (26 M)	63' (19 M)	35' (11 M)
6.25" (160 mm)	101' (31 M)	75' (23 M)	52' (15 M)
8.25" (210 mm)	116' (36 M)	87' (26 M)	56' (17 M)
12.25" (310 mm)	142' (43 M)	106' (32 M)	69' (21 M)
16.25" (410 mm)	164' (50 M)	122' (37 M)	82' (25 M)

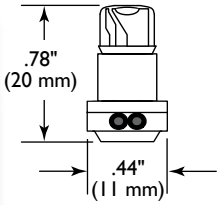

TokiLed-UB
0.40 watt

Accessories

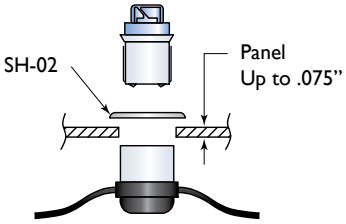

Part#: SH-02
The SH-02 is a stainless steel fastener used to securely attach Lightstring sockets to panels through a 3/8"Ø hole.

For applications requiring independent points of light, our FL-200 & FL-300 sockets are provided with a 12" lead wire.

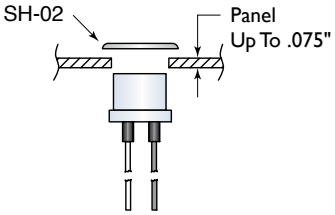

Part#: FL-200
This is a back-mount socket for use with the SH-02 fastener. Hole Size: 3/8"Ø

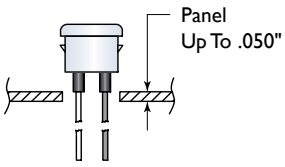

Part#: FL-300
For front-mount applications, this socket remains close to flush with the surface. Hole Size: 3/8"Ø

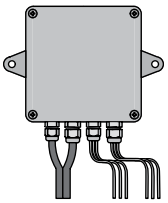

Part#: HC-10
This gasketed junction box accepts #12 AWG Landscape Cable, which may be spliced to 6 independent Lightstring fixtures (3 per output).

Part#: EC-FL
Lightstrings may be cut to size on site. Vinyl end caps insulate the end of the wire.

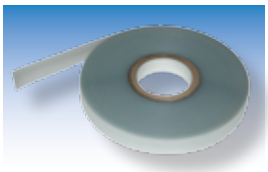

Part# NSY-TP
Clear elastic nursery tape may be used to secure Lightstrings to branches without prohibiting plant growth.

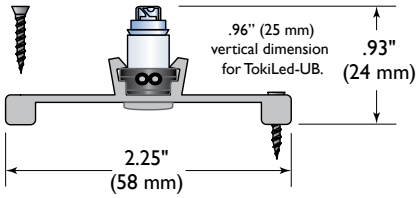

Part#: SL-MB-BK
These mounting brackets provide a convenient means of attaching Lightstrings to a variety of surfaces.

© 2011 | TOKISTAR LIGHTING INC. / V1.0

TOKISTAR® LIGHTING INC.
1015 E. Discovery Lane • Anaheim, CA 92801

SECTION 101425

CODE SIGNAGE

PART 1 - GENERAL

1.1 SUMMARY

A. Section Includes: Code required signage.

1.2 SUBMITTALS

A. Product Data: Submit product data for each type of sign specified, including details of construction relative to materials, dimensions, profiles, and finishes.

B. Shop Drawings:
   1. Submit shop drawings covering fabrication, installation and finish of specified systems.
   2. Include following:
      a. Fully dimensioned plans and elevations with detail coordination keys.
      b. Locations of exposed fasteners and joints.
      c. Message list for each sign required, including large-scale details of wording and lettering layout.

1.3 QUALITY ASSURANCE

A. Single-Source Responsibility: For each separate sign type required, obtain signs from one source of a single manufacturer.

PART 2 - PRODUCTS

2.1 MANUFACTURERS

A. Acceptable Manufacturers
   1. Andco Industries Corporation, Greensboro, NC.
   2. ASI Sign Systems, Inc., Dallas, TX.
   3. Poblocki and Sons Company, West Allis, WI.
   4. Vomar Products, Inc., Van Nuys, CA.

2.2 MATERIALS

A. Aluminum Extrusions: Extrusions of alloy and temper recommended by sign manufacturer for type of use and finish indicated, and with not less than strength and durability properties specified in ASTM B221 for 6063-T5.

B. Fasteners: Use concealed fasteners fabricated from metals that are not corrosive to sign material and mounting surface.

C. Colored Coatings for Acrylic Plastic Sheet: Colored coatings, including inks and paints for copy and background colors; recommended by acrylic manufacturers for optimum adherence to acrylic surface, and nonfading for application intended.

2.3 CODE SIGNAGE

A. General: Signage shall conform to CBC Sections as referenced below.

B. Braille: Use Contracted Grade 2 Braille whenever Braille symbols are specifically required. Dots shall be 1/10 inch on center within each cell with 2/10 inch space between cells. Dots shall be raised 1/40 inch above background. Refer to CBC Section 1117B.5.2.

C. Sign Schedule: Provide signage as required by codes and accessibility regulations and requirements. These include, but are not limited to:
   1. Illuminated Exit Signs: Refer to Division 26.
   2. Fire Doors (CBC Section 1008)
   3. Room Capacity (CBC Section 1004.3)
   4. Accessibility signs (ADA Accessibility 28 CFR 35 Requirements including Braille) including toilet facilities, doors to exitways. (CBC Sections 1011.3, 1117B.5, 1115B.6, and 1133B.4).

05/03/13 PERMIT SET

5. Room Signage: Provide as required by ADA accessibility requirements and code. Include Room Name and Room Number on each sign. Match campus standard.
6. Toilet Rooms:
   a. MEN and WOMEN.
   b. Sizes as selected.

D. Signage types: Refer to Drawing G-001

2.4 FINISHES

A. Metal Finishes: Comply with NAAMM "Metal Finishes Manual" for finish designations and applications recommendations.

B. Aluminum Finishes:
1. Organic Coating: Thermosetting-modified acrylic enamel primer/topcoat system complying with AAMA 603.8 except with a minimum dry film thickness of 1.5 mils, medium gloss.
2. Color: Match Engineer's sample.

PART 3 - EXECUTION

3.1 EXAMINATION

A. Examine conditions and proceed with work when substrates are acceptable.

B. Examine supporting members to ensure surfaces are at proper elevation and are free from dirt or other deleterious matter.

3.2 INSTALLATION

A. General:
1. Locate sign units and accessories where indicated, using concealed mounting methods in compliance with manufacturer's instructions.
2. Install signs and letters level, plumb, and at height indicated, with sign surfaces free from distortion or other defects in appearance.
3. Wall-Mounted Panel Signs: Attach panel signs to wall surfaces using double-sided tape or velcro.
4. Apply self-adhering pressure-sensitive letters in accordance with manufacturer’s directions.

3.3 CLEANING AND PROTECTION

A. After installation, clean soiled sign surfaces according to manufacturer's instructions. Protect units from damage until acceptance by Owner.

END OF SECTION

05/03/13 PERMIT SET

SECTION 102113

METAL TOILET COMPARTMENTS

PART 1 - GENERAL

1.1 SUMMARY

A. Section Includes:
   1. Floor mounted, overhead braced stainless steel toilet compartments.
   2. Urinal screens.

B. Related Section: Section 102813 - Toilet Accessories.

1.2 SUBMITTALS

A. Product Data: Submit manufacturer's product data, parts list, and catalog cut sheets.

B. Shop Drawings:
   1. Indicate layouts, swing of doors, elevations, anchorage and mounting details, components, hardware, finishes, and relevant dimensions.
   2. Furnish template drawings for anchorage locations in supporting members for attachment of compartments.

C. Manufacturer's Instructions: Submit manufacturer's printed installation instructions.

1.3 QUALITY ASSURANCE

A. Regulatory Requirements: Comply with Authorities Having Jurisdiction, Americans with Disabilities Act (ADA) including ADA Accessibility Guidelines, and CAC Title 24 to accommodate barrier free design.

1.4 DELIVERY, STORAGE, AND HANDLING

A. Deliver, store, and handle products in accordance manufacturer’s instructions.

PART 2 - PRODUCTS

2.1 MANUFACTURERS

A. Acceptable Manufacturers:
   1. Mills Bradley
   2. All American Metal Corporation, Freeport, NY.
   3. American Sanitary Partition Corporation, Ocoee, FL.
   4. Ampco Products, Inc., Hialeah, FL.
   5. Global Steel Products Corporation, Deer Park, NY.
   6. Sanymetal, A Crane Plumbing Company, Somerset, KY.
   7. Weis/Robart Partitions, Inc., Wayne, MI.

2.2 MATERIALS

A. Stainless Steel: ASTM A240, UNS Number S30200 or S30400.

B. Core: Manufacturer's standard honeycomb sound deadening assembly.

C. Brackets: Stainless steel with satin finish, aluminum with anodized finish, brass with chrome plated finish, or die cast zamac alloy with chrome plated finish.

D. Hardware:
   1. Construction and Finish: Manufacturer's standard design of stainless steel with satin finish, brass with chrome plated finish, or die cast zamac alloy with chrome plated finish.
   2. Hinges: Cut out insert design or surface mounted, gravity or spring-action cam, adjustable to hold door open at any angle up to 90 degrees.
   3. Latch: Concealed bolt or surface mounted, equipped with accessible slide bolt, combination strike/keeper with rubber bumper, and emergency operation feature mounted at 30 to 44 inches above floor.

05/03/13 PERMIT SET

4. Coat Hook/Bumper: Combination unit with hook and rubber tipped bumper at in-swinging doors. Independent units with coat hook on interior and rubber tipped bumper on exterior side of door at outswinging doors mounted at 48 inches above floor.
5. Pull: At accessible stalls, surface mounted U-shaped design on both sides of outswinging doors, mounted at 30-44 inches above floor.

E. Pilaster Shoes: Stainless steel, 0.0313 inch minimum.

F. Anchorage Devices:
1. Exposed Fasteners: Manufacturer's standard stainless steel or chrome plated brass, theft-resistant type screw head and nuts.
2. Concealed Fasteners: Stainless steel.

G. Head Rail Bracing: Extruded aluminum, anti-grip style with cast socket type wall brackets, clear anodized finish.

2.3 FABRICATION

A. Compartments: Floor supported-overhead braced design.

B. Urinal Screens: Wall hung-flange supported design.

C. General Requirements:
1. Take field measurements to ensure proper fitting of Work. Shop assemble to greatest extent possible.
2. Provide formed and closed edges for doors, panels, and pilasters. Miter and weld corners; grind smooth. Provide closed edges in stainless steel material.
3. Provide internal reinforcement in areas of attached hardware and fittings.
4. Mark locations of reinforcement for compartment mounted washroom accessories. Grab bars and toilet paper holders are specified in Section 102813.
5. Provide factory cutouts for through-mounted toilet accessories; coordinate requirements with Section 102813.

D. Pilasters:
1. Face sheets 20 gage minimum, except where heavier gage required by manufacturer.
2. 1-1/4 inch thickness and of widths required by compartment sizes and spacing.
3. Equip with leveling devices, anchor studs, and locking nuts.
4. Equip with stainless steel shoe, 3 inch height minimum, satin finish; no exposed fasteners permitted.

E. Panels:
1. Face sheets 20 gage minimum, except where heavier gage required by manufacturer.
2. 1 inch thickness, 58 inch height.

F. Doors:
1. Face sheets 22 gage minimum.
2. 1 inch thickness, 58 inch height, 36 inch minimum width at barrier free accessible compartments, manufacturers standard width at other compartments.

G. Urinal Screens:
1. Same basic construction as components for toilet compartments.
2. Panel of 18 inch minimum width, 42 inch height, unless indicated otherwise on Drawings.

2.4 FINISH

A. Stainless Steel:
1. No. 4 satin, vertical grain.
2. Protect finish with factory applied adhesive paper covering.

PART 3 - EXECUTION

3.1 EXAMINATION

A. Examine conditions and proceed with Work when substrates conditions are acceptable.

05/03/13 PERMIT SET

B. Check areas scheduled to receive compartments for correct dimensions, plumbness of walls, soundness of wall surfaces, location of built-in anchorage/supporting devices, and other conditions that would affect proper installation of holding brackets and anchorage or suspension devices.

C. Verify spacing of plumbing fixtures to ensure compatibility with compartment installation.

3.2 INSTALLATION

A. General:
1. Install in accordance with manufacturer's instructions and approved shop drawings.
2. Install compartments and urinal screens rigid, straight, plumb, and level in accordance with manufacturer's printed instructions.
3. Anchorage: Rigidly attach compartments to supporting construction. Do not use wood, plastic or fiber plugs.
4. Concrete and Masonry: Use powder driven or self-drilling anchors.
5. Ceramic Tile/Gypsum Board: Provide metal blocking between studs and screw attach to blocking.
6. Maintain 1/2 inch maximum clearances between pilasters and panels.
7. Maintain 1 inch maximum clearances between panels and walls.
8. Secure panels to walls with not less than two stirrup brackets attached near top and bottom of panel.
9. Attach wall brackets with fastener holes located in tile joints.
10. Conceal evidence of drilling, cutting, and fitting of room finishes.

B. Floor Supported Overhead Braced Compartments:
1. Secure pilasters to floor with pilaster supports anchored with 2 inch minimum penetration into floor system.
2. Level, plumb, and tighten installation with leveling device.
3. Secure pilaster shoes in position.
4. Secure headrail to pilasters with not less than 2 fasteners. Secure headrail to walls using brackets.
5. Set tops of doors parallel with overhead brace when doors are in closed position.

C. Urinal Screens: Install with continuous brackets in same manner as compartments.

3.3 ADJUSTING

A. Adjust and lubricate hardware for proper operation after installation.

B. Set hinges on inward swing doors to hold doors open approximately 30 degree angle from closed position when unlatched.

C. Set hinges on outward swing doors to hold doors open approximately 10 degrees from closed position.

D. Perform final adjustments to leveling devices and hardware.

E. Adjust and align door hardware for uniform 3/16 inch clearance at vertical edges.

F. Touch-up minor scratches to be nonperceptible at distance of 3'-0". Otherwise replace damaged material with new materials matching undamaged at no additional cost to Owner.

3.4 CLEANING

A. Clean exposed surfaces free of oil, dirt, and imperfections.

B. Remove protective paper from stainless steel assemblies. Clean surfaces free of residue and polish to uniform lustre.

END OF SECTION

05/03/13 PERMIT SET

SECTION 102813

TOILET ACCESSORIES

PART 1 - GENERAL

1.1 SUBMITTALS

A. Product Data: Submit manufacturer's catalog cut sheets, and data sheets.

B. Shop Drawings: Submit setting drawings, templates, instructions, and directions for installing anchorage devices and cut-out requirements in other work.

C. Submit following Informational Submittals:
   1. Certifications specified in Quality Assurance article.
   2. Manufacturer's instructions.

D. Closeout Submittals:
   1. Maintenance data.

1.2 QUALITY ASSURANCE

A. Regulatory Requirements: Comply with Authorities Having Jurisdiction, Americans with Disabilities Act (ADA) including ADA Accessibility Guidelines, and CBC Section 1115B.8 to accommodate barrier free design.

B. Certification: Provide verification of grab bar strength and installation.

1.3 DELIVERY, STORAGE, AND HANDLING

A. Deliver, store, and handle products in accordance manufacturer’s instructions.

B. Pack accessories individually with protective wrappings.

1.4 KEYING

A. Dispense units keyed alike, furnish six keys. Key coin boxes separately from dispensing unit; furnish 6 keys.

PART 2 - PRODUCTS

2.1 MANUFACTURERS

A. Acceptable Manufacturers:
   1. American Specialties, Inc., Yonkers, NY.
   2. Bobrick Washroom Equipment, Inc., North Hollywood, CA.
   3. Bradley Corporation, Menomonee Falls, WI.

B. Bobrick accessories are specified, but items of equivalent design, sightlines, construction, size, function and capacity by manufacturers listed in paragraph above are also acceptable.

2.2 MATERIALS

A. Stainless Steel:
   1. Sheet: ASTM A240, UNS S30400, 22 gage, except where specified otherwise.
   2. Tubing: ASTM A269, UNS S30400.

B. Sheet Steel:
   1. Cold rolled: Commercial quality ASTM A336, 20 gage minimum. Surface preparation and metal pretreatment as required for applied finish.
   2. Galvanized steel: ASTM A653, G60 zinc coating.

C. Aluminum Casting: ASTM B85.

D. Fasteners: Screws, bolts, and other devices of same material and finish as accessory item, or of galvanized steel complying with ASTM A123 where concealed; theft-proof design at exposed conditions.

05/03/13 PERMIT SET

E. Expansion Shields: Type as recommended by accessory manufacturer for component and substrate.

F. Sanitary Sealant:
   1. One part silicone conforming to ASTM C920, Type S, Grade NS..
   2. Color: White
   3. Acceptable Products:
      a. 786 Mildew-Resistant Silicone Sealant, The Dow Chemical Company.
      b. Sanitary 1700, General Electric Silicones.
      c. Tremsil 200 Sanitary, Tremco

G. Adhesives & Sealants:
   1. Adhesives shall meet or exceed the VOC and chemical component limits of Cal-GREEN Table 5.504.4.1 Adhesive VOC Limit requirements.
   2. Sealants shall meet or exceed the VOC and chemical component limits of Cal-GREEN Table 5.504.4.2 Sealant VOC Limit requirements.

2.3 FABRICATION

A. Weld and grind smooth joints of fabricated components.

B. Form exposed surfaces from single sheet of stock, free of joints.

C. Form surfaces flat without distortion. Maintain flat surfaces without scratches or dents.

D. Back paint components where contact is made with building finishes to prevent electrolysis.

E. Shop assemble components and package complete with fasteners, anchors, and fittings.

F. Provide anchor plates, adapters, and anchor components necessary for installation.

2.4 FACTORY FINISHING

A. Galvanizing After Fabrication: ASTM A123, 1.25 ounce per square yard.

B. Shop Primed Ferrous Metals: Pretreat and clean, spray apply one coat primer and bake.

C. Stainless Steel: No. 4 satin luster.

PART 3 - EXECUTION

3.1 EXAMINATION

A. Examine conditions and proceed with Work when substrates and environmental conditions are acceptable.

B. Verify that site conditions are ready to receive work and dimensions are as indicated on shop drawings and instructed by manufacturer.

C. Check openings for plumbness of blocking and frames.

D. Beginning of installation means acceptance of existing conditions.

3.2 PREPARATION

A. Deliver inserts and rough-in frames to site at appropriate time for installation.

B. Provide templates and rough-in measurements as required.

C. Verify exact location of accessories for installation.

D. Protect adjacent or adjoining finished surfaces and work from damage during installation.

E. Coordinate work with placement of wall reinforcement and reinforcement of toilet partitions to receive anchor attachments.

F. Supply rough-in data in sufficient time to be built into other work.

G. Do not install accessories until room finishes are completed.

3.3 INSTALLATION

A. Install in accordance manufacturer's instructions and approved shop drawings.

B. Install in accordance with manufacturer's instructions and with accessibility requirements of ADA and ANSI A117.1.

C. Mount toilet accessories required to be accessible in accordance with California Building Code Section 1118B.

D. Toilet paper and feminine napkin dispensers, and similar items located on grab bar side of accessible toilet room or stall shall not project more than 3 inches from finished wall surface nor be located closer than 1-1/2 inch clear of tangent point of grab bar.

E. Locate accessories in order that they do not interfere with door swings or use of fixtures. Install accessories after wall finishes have been completed.

F. Install plumb, level, and securely anchored to substrate.

G. Anchor accessories with bolts, plates, and approved type fasteners.

H. Install surface mounted accessories to backup material with toggle bolts, plumb and align.

I. Grab bars:
   1. Anchor grab bars to drywall with concealed 16 gage steel anchor plates.
   2. Install grab bars in manner to support 250 pound hanging load placed at any point along bar length.

J. Seal fastener holes with sanitary silicone sealant prior to mounting accessories and grab bars in showers. Set entire plate and perimeter trim in sealant to ensure watertight installation at penetrations to partitions.

K. Adjust accessories for proper operation and smooth mechanical function.

L. Clean and polish exposed surfaces after removal of protective coverings.

3.4 SCHEDULE OF ACCESSORIES

A. Basis of Design: Refer to Toilet Accessory Schedule on Drawing Sheet A600.

END OF SECTION

05/03/13 PERMIT SET

SECTION 104400

FIRE PROTECTION SPECIALITES

PART 1 - GENERAL

1.1 DEFINITIONS

A. Where indicated on Drawings, abbreviation "FEC" defines fire extinguisher and cabinet and abbreviation "FE" is for fire extinguisher without cabinet.

1.2 SUBMITTALS

A. Product Data:
   1. Furnish manufacturer's descriptive literature.
   2. Include physical dimensions, operational features, color and finish, anchorage details, material descriptions, and type of hardware.

B. Shop Drawings: Include rough-in measurements, locations, and details for cabinets.

C. Samples: Submit sample of manufacturer's standard finish and color on actual base metal.

D. Submit following Informational Submittals:
   1. Certificates: Submit certification attesting compliance with UL and NFPA requirements.
   2. Manufacturer's instructions: Submit installation instructions for fire extinguisher cabinets.

1.3 QUALITY ASSURANCE

A. Single Source Responsibility: Obtain products in this Section from one manufacturer.

B. Certifications:
   1. Provide extinguishers which are UL listed and bear UL rating for type and classification.
   2. Conform to NFPA-10 requirements for extinguishers.

1.4 DELIVERY, STORAGE, AND HANDLING

A. Deliver, store, and handle products in accordance manufacturer’s instructions.

1.5 PROJECT CONDITIONS

A. Environmental Requirements: Do not store products subject to freeze damage in environments where damage could occur.

PART 2 - PRODUCTS

2.1 MANUFACTURERS

A. Acceptable Manufacturers:
   1. J. L. Industries, Bloomington, MN.
   2. Larsen's Manufacturing Company, Minneapolis, MN.
   3. Potter Roemer, Cerritos, CA.

2.2 FIRE EXTINGUISHERS

A. Multi-Purpose Dry Chemical Type (Siliconized Mono Ammonium Phosphate) with Pressure Gage.
   1. Capacity: 10.0 pounds.
   2. UL Rating: 4A-60B:C.
   3. Acceptable Product: MP10, Larsen's Manufacturing Company, Minneapolis, MN.

2.3 CABINETS

A. Fire Extinguisher Cabinet:
   1. Formed sheet metal 20 gage prime painted steel, epoxy finished interior.
   2. Recessed type.
   3. Cabinet Construction: Nonrated, except provide rated cabinet when recessed into rated partitions of same rating as partition.
   4. Size to accommodate specified fire extinguisher and accessories.

05/03/13 PERMIT SET

B. Trim: Flat, Prime painted steel.

C. Door:
   1. Material: Prime painted galvanized steel.
   2. Thickness: 20 gage minimum, reinforced for flatness and rigidity.
   3. Latch: Roller latch.
   4. Door style: Vertical view panel.

D. Glass: 1/8 inch thick tempered glass.

E. Mounting Hardware: Appropriate to cabinet.

F. Graphic Identification: Lettering complying with authorities having jurisdiction for letter style, size, spacing, and location. Locate as indicated by Engineer. Individual press-on letters.

2.4 ACCESSORIES

A. Fire Extinguisher Brackets: Larsen's Manufacturing Company, Minneapolis, MN "B" series full length wall brackets, size as required for cylinder used.

2.5 FABRICATION

A. Form body of cabinet with tight inside corners and seams.

B. Predrill holes for anchorage.

C. Form perimeter trim and door stiles by welding, filling, and grinding smooth.

D. Hinge doors for 180 degree opening with continuous piano hinge. Provide nylon roller type catch.

E. Glaze doors with resilient channel gasket glazing.

2.6 FINISHES

A. Extinguisher: Red enamel.

B. Cabinet Trim and Door: Prime painted for field finishing under Section 099000.

C. Cabinet Interior: White epoxy.

PART 3 - EXECUTION

3.1 EXAMINATION

A. Examine conditions and proceed with work when substrates are ready.

B. Verify rough openings for cabinets are correctly sized and located.

3.2 INSTALLATION

A. Install in accordance with manufacturer's printed instructions.

B. Install cabinets plumb and level in wall openings, 48 inches from finish floor to door handle of cabinets at locations indicated on Drawings.

C. Securely attach cabinets and mounting brackets in place to wall blocking.

3.3 IDENTIFICATION

A. Identify fire extinguisher locations with following methods:
   1. For fire extinguisher locations without cabinets, use vertical decal spelling "FIRE EXTINGUISHER" applied to adjacent wall surface.
   2. For fire extinguisher cabinet locations, use individual press-on letters, in vertical format, of contrasting color to cabinet, spelling FIRE EXTINGUISHER.

END OF SECTION

05/03/13 PERMIT SET

SECTION 113100

APPLIANCES

PART 1 - GENERAL

1.1 SUMMARY

A. Section Includes: Undercounter Refrigerator.
   1. Division 26 - Electrical: Power rough-in.

1.2 SUBMITTALS

A. Product Data:
   1. Submit product data for appliances.
   2. Submit color charts for finish indicating manufacturer's colors available for selection.

B. Submit following Informational Submittals:
   1. Qualification Data: Manufacturer's and installer's qualification data.
   2. Manufacturer's instructions.

C. Closeout Submittals:
   1. Operation and maintenance data.
   2. Warranty: Submit specified warranty.

1.3 QUALITY ASSURANCE

A. Single Source Responsibility: Each item of equipment specified by generic type is required to be from one manufacturer.

1.4 DELIVERY, STORAGE, AND HANDLING

A. Deliver, store, and handle products in accordance manufacturer’s instructions.

B. Do not deliver to Project until installation area is fully enclosed and protected from weather and theft.

1.5 WARRANTY

A. Provide full 5 year warranty for undercounter refrigerator.

PART 2 - PRODUCTS

2.1 APPLIANCES

A. Undercounter Refrigerator:
   1. Type: Undercounter type, with adjustable shelves, single door.
   2. Energy Star rated.
   3. ADA accessible.
   4. Size:
      a. Total Capacity: 5.4 cubic feet.
      b. Exterior Dimensions: 24 inches wide by 32 inches high by 24-1/16 inches deep.
   5. Power requirement: 120 volt, 60 Hz, 3-wire grounded.
   6. Color: Stainless steel door].
   7. Temperature range between 33° and 45° F
   8. Split top shelf design allows smaller items on one side and taller items on the other side.
   9. Two pull-out white wire shelves with safety stops
   10. Full auto defrost
   11. Height adjustment up to 1 inch with leveling legs
   12. Hinge on left side.
   13. Acceptable Model: Model No. 6ADAM-BS-F-R by AGA Marvel.

05/03/13 PERMIT SET

PART 3 - EXECUTION

3.1 EXAMINATION

A. Examine conditions and proceed with work when substrates are ready.

B. Examine appliances thoroughly upon removal from packing crates and protective wrappings upon arrival at site.

C. Verify that accessories necessary for complete installation have been included with appliance.

D. Examine installation area to ensure rough-in requirements have been met and area is ready to receive each appliance.

3.2 PREPARATION

A. Ensure that appliances are fully assembled and ready for installation in final location.

B. Verify that clearances at final location are adequate for proper functioning and operation of equipment.

3.3 INSTALLATION

A. Install in accordance with manufacturer's instructions.

B. Anchor components plumb and level, secured for long life under hard use. Align where necessary with adjacent cabinets, equipment and surfaces.

3.4 ADJUSTING

A. Adjust appliances to ensure smooth, quiet, trouble-free operation.

3.5 CLEANING

A. Ensure appliances are wiped clean prior to final acceptance.

3.6 DEMONSTRATION

A. Provide test demonstration to Owner to ensure proper control and operation of appliance.

END OF SECTION

05/03/13 PERMIT SET

SECTION 115213

PROJECTION SCREEN

PART 1 - GENERAL

1.1 SUMMARY

A. Motor operated ceiling mounted projection screen.

B. Related Sections:
   1. Section 061000 - Rough Carpentry: Substrate support.
   2. Division 26 - Electrical: Building power system.

1.2 SYSTEM REQUIREMENTS

A. Screen Performance Requirements:
   1. Matte-White Viewing Surface: Peak gain of 0.9 to 1.0, and gain of not less than 0.8 at an angle of 50 degrees from the axis of the screen surface.
   2. Mildew Resistance: Rating of 0 or 1 when tested according to ASTM G 21.
   3. Flame Resistance: Passes NFPA 701.
   4. Flame-Spread Index: Not greater than 75 when tested according to ASTM E 84.

1.3 SUBMITTALS

A. Product Data: Submit product data for projection screens.

B. Shop Drawings:
   1. Submit shop drawings of details indicating structural substrate required for mounting housing brackets.
   2. Include identification and ratings of components, details of construction and materials.
   3. Indicate integration of screen with adjacent surfaces.
   4. Include wiring diagram and identification of wiring terminals for electrically-operated units.

C. Samples: 12 by 12 inch pieces of projection screen material for approval prior to order.

D. Submit following Informational Submittals:
   1. Certifications specified in Quality Assurance article.
   2. Qualification Data: Manufacturer's and installer's qualification data.
   3. Manufacturer's instructions.
   4. Manufacturer's field reports.

E. Closeout Submittals:
   1. Operation and maintenance data.
   2. Warranty: Submit specified warranty.

1.4 QUALITY ASSURANCE

A. Single Source Responsibility: Obtain each type projection screen from single manufacturer, including accompanying accessories necessary for mounting and operation.

B. Manufacturer Qualifications: Minimum 5 years experience in production and installation of projection screens specified.

C. Installer Qualifications: Approved in writing by manufacturer.

D. Certifications: Submit manufacturer's certification that products furnished for Project meet or exceed specified requirements.

1.5 DELIVERY, STORAGE, AND HANDLING

A. Deliver, store, and handle products in accordance manufacturer’s instructions.

B. Do not deliver projection screens until building is enclosed, work on screen area is substantially complete and screen installation ready to occur.

05/03/13 PERMIT SET

PART 2 - PRODUCTS

2.1 ELECTRICALLY OPERATED PROJECTION SCREENS

A. Type: Ceiling recessed with ceiling closure.

B. Operation:
1. Manufacturer's standard UL Listed and marked units.
2. Accessible electric motor, 120 VAC 60 Hz, size and capacity for screen size.
3. Instantly reversible, with lifetime lubrication.
4. Limit switches, positive stop action to prevent coasting, and thermal overload protection.
5. Motor-in-roller.
6. Automatic ceiling closure.

C. Screen Controls:
1. Single station, 3 position, UL listed switch with metal device box and cover plate, 120 VAC.

D. Screen: Matte white, flame and mildew resistant.

E. Screen Size: As selected by Engineer.

F. Screen Case:
1. Wood, double top, prime paint finish.
2. Metal lined motor compartment.
3. Piano hinged closure, automatic with drive mechanism.
4. Bottom panel access and manual opening.
5. Mounting brackets as required for installation.

G. Screen Installation:
1. Ceiling recessed:
   a. Without ceiling closure - align bottom edges with finish ceiling.
   b. Offset mount - to allow finish ceiling material to align with bottom of case edges and bottom closure.
   c. Flush mount - to allow finish ceiling material to align with same finish ceiling material over case edges and bottom closure.

H. Acceptable Products and Manufacturers:
1. Ambassador, Draper Shade and Screen Company, Inc., Spiceland, IN.
2. Executive Electrol, Da-Lite Screen Company, Inc., Warsaw, IN.
3. Series 950, Bretford Manufacturing, Inc., Franklin Park, IL.

PART 3 - EXECUTION

3.1 EXAMINATION

A. Examine conditions and proceed with work when substrates are ready.

B. Ensure construction, painting, finishing and clean-up is substantially complete in area of installation to avoid damage to optical surface.

3.2 PREPARATION

A. Obtain or determine finish ceiling elevations for locating screens at proper heights.

3.3 INSTALLATION

A. Install in accordance with manufacturer’s instructions.

B. Install projection screens in spaces indicated.

C. Secure mounting brackets to structure with approved fasteners.

D. Install recessed projection screens prior to installation of ceiling.

E. Electrically Operated Units:
1. Locate motor controls where indicated.
2. Exposed wiring or conduit will not be permitted.
3. Connect motor and controls to building power system.

3.4 ADJUSTING

A. Adjust motor controls as required for proper operating speeds.

B. Upon completion, screens are required to operate freely and hang plumb and square.

3.5 CLEANING

A. Do not use solvents or abrasive cleaners of any type.

B. Clean only with mild soapy water and soft lint-free cloths.

C. Blot dry to remove excess moisture.

3.6 PROTECTION

A. Protect finished work.

B. Protect projection screens from damage or defacement until final completion and acceptance of the project by the Owner.

C. Replace damaged units prior to final completion at no additional cost to Owner.

3.7 DEMONSTRATION

A. Arrange to demonstrate system to Owner's representative at time mutually agreeable.

B. Manufacturer's representative shall also instruct Owner's designated personnel in complete operation and maintenance of installed system.

END OF SECTION

05/03/13 PERMIT SET

SECTION 122413

ROLLING WINDOW SHADES

PART 1 - GENERAL

1.1 SUMMARY

A. Section Includes: Manual operated rolling window shades.

B. Related Sections:
   1. Section 061000 - Rough Carpentry: Wood blocking.

1.2 SUBMITTALS

A. Product Data:
   1. Submit product data for rolling shades.
   2. Include data to indicate shading coefficient, and thermal transmittance/reflectance properties.

B. Shop Drawings:
   1. Submit shop drawings for rolling shades.
   2. Indicate typical layout including dimensions, and location of controls.
   3. Submit detail drawings of special accessory components not included in manufacturer's product data.
   4. Submit detail drawings of head, jamb, and sill conditions for each type of opening and supporting structure, and conditions between adjacent shade units.

C. Samples:
   1. Submit three 36 inch square samples of shade material in specified material, pattern, and color, indicating variations in color, weave, and texture.
   2. Submit three 6 inch samples of fascia aluminum material in specified color and finish indicating variation in color and finish.

D. Informational Submittals: Submit the following:
   1. Qualification Data: Installer's qualification data.
   2. Manufacturer's instructions.

E. Closeout Submittals:
   1. Operation and Maintenance Data: Submit manufacturer’s printed, recommended operation and maintenance data.
   2. Warranty: Submit specified warranty.

1.3 QUALITY ASSURANCE

A. Single Source Responsibility:
   1. Furnish shade units from one manufacturer for entire Project, unless otherwise acceptable to Engineer.
   2. Provide each shade as complete unit, including hardware, mounting brackets, fasteners, and accessory items.

B. Regulatory Requirements: Ensure fabrics and plastic components comply with applicable portions of local, state, and federal codes, laws, and ordinances for flame spread and smoke development indices.

1.4 DELIVERY, STORAGE, AND HANDLING

A. Deliver, store, and handle products in accordance manufacturer’s instructions.

B. Deliver shades to site wrapped and packaged to prevent damage to components and marring of surfaces.

C. Store shades in clean, dry area, laid flat and off ground to prevent sagging, twisting, or warping.

D. Safeguard against damage by physical abuse or damage from harmful materials.

05/03/13 PERMIT SET

1.5 WARRANTY

A. Warrant installed shade units to be free from defects in material and workmanship for a period of 3 years.

B. Warrant applied finishes to maintain gloss and resist peeling, fading, and chalking for a period of 3 years.

PART 2 - PRODUCTS

2.1 MANUFACTURERS AND PRODUCTS

A. Acceptable Manufacturers and Products:
   1. MechoShade Systems, Inc., Long Island City, NY.
      a. Mecho Shade Series - Manual Operation.
   2. Draper Shade and Screen Company, Inc., Spiceland, IN.
      a. FlexShade System – Manual Operation.

2.2 MATERIALS AND COMPONENTS

A. Drive Roller Tube: Round tube with asymmetrical channels to receive shade spline; sized by manufacturer for height, width, and weight of fabric to prevent sag; extruded 6063 alloy, T6 temper aluminum.

B. Light Filtering Shade Fabric: ASTM D3374; flame retardant, PVC coated, fiberglass/polyester yarn woven to create maximum 2 percent openness factor.
   1. Basis of Design: Refer to Finish Schedule on Drawing Sheet A600.

C. Manual Drive Mechanism:
   1. Operator: Smooth operating chain and sprocket drive with concealed, adjustable, bi-directional slip clutch that will allow shade to stop in any position.
   2. Limit Controls: Provide upper and lower stop limits to prevent over winding and to allow air flow at sill.
   3. Provide multi-shade operations (two shades per control chain).

D. Recessed Ceiling Pocket: Project fabricated pocket with removable extruded aluminum closure piece; painted white.

E. Accessories:
   1. Bottom Bar: Minimum 1/8 by 3/4 inch aluminum bar sewn into bottom hem of shade
   2. Mounting Brackets: Sheet steel brackets to receive drive end and idle end roller caps. Include hardware necessary to securely attach brackets to supporting construction and to support weight of shades plus forces applied to operate shades.
   3. Manual Shade Control chain: Continuous No. 10 nickel plated brass bead chain.
   4. Provide other materials necessary for complete and proper installation and operation.

2.3 FABRICATION

A. Prior to fabrication, field measure actual opening dimensions to ensure proper fit.

B. Fabricate units for pocket mounting to completely fill openings from head to 1-3/4 inch below glass sight line at sill and from centerline to centerline of mullions. On single windows and at sides of end windows, allow for 1-3/4 inch overlap beyond glass sight line at jambs.

C. Fabricate shades in longest possible lengths. Locate ends of adjacent shade units at window mullions or other defined vertical separations where single length shades are not practical.

D. Fabricate roller tube with controls capable of being located at either end of tube.

E. Fabricate shade fabric with top edge attached to removable spline designed to lock into roller tube. Fabricate bottom edge with concealed bottom bar sewn in hem. Hem, heat-set or otherwise treat edges of fabric to prevent raveling.

F. Adjust limit controls to allow infinite positioning of shades from fully closed to fully open.

G. Locate operating controls on end of paired shade as determined and indicated on shop drawings.

H. Fabricate recessed ceiling pocket to hang above ceiling with face of shade opening slot aligned flush with ceiling grid. Provide perimeter trim to frame opening through ceiling. Install separate support members to suspend shade assembly independent of ceiling system.

PART 3 - EXECUTION

3.1 EXAMINATION

A. Examine conditions and proceed with work when substrates and environmental conditions are acceptable.

B. Verify that openings in which shades will be installed are free of conditions that might interfere with shade installation or operation.

3.2 INSTALLATION

A. Install in accordance with manufacturer's instructions and approved shop drawings.

B. Install units plumb, level, square, and free from warp or twist while maintaining dimensional tolerances and alignment with surrounding construction.

C. Install shades with adequate clearance to permit smooth operation of shades and sash operators.

D. Maintain 1/4 inch clearance from each side of window openings on inside mounting conditions and 1/4 inch between adjacent shade units unless other clearance is indicated on approved shop drawings.

3.3 ADJUSTING

A. Adjust parts for smooth, uniform operation.

B. Adjust preset limit stops as directed by Engineer.

3.4 CLEANING

A. Wipe surfaces with clean damp cloth as recommended by manufacturer. Do not use steam, hot water, bleach, or abrasive or solvent based cleaners.

3.5 PROTECTION

A. Protect finished work.

B. Store installed shades in fully retracted position to avoid damage and accumulation of dust and dirt until Final Completion.

END OF SECTION

05/03/13 PERMIT SET

SECTION 123664

QUARTZ COUNTERTOPS

PART 1 - GENERAL

1.1 SUMMARY

A. Section Includes: Quartz countertops in toilet rooms.

B. Related Sections:
   1. Section 055000 – Metal Fabrications: Support steel.
   2. Division 22 – Plumbing.

1.2 SUBMITTALS

A. Product Data: Include physical properties and performance criteria for sheet materials and related components.

B. Shop Drawings: Indicate materials, dimensions, fabrication details, jointing methods, anchorages, and attachment provisions.

C. Samples: Submit 6 by 6 inch in size illustrating color, pattern, and edge treatment each solid surface material.

D. Closeout Submittals: Submit maintenance data.

1.3 QUALITY ASSURANCE

A. Regulatory Requirements: Comply with Authorities Having Jurisdiction, Americans with Disabilities Act (ADA) including ADA Accessibility Guidelines, and CAC Title 24 to accommodate barrier free design.

B. Single Source Responsibility: Furnish each unit from one manufacturer, unless otherwise acceptable to Engineer.

C. Fabricator Qualifications: Company specializing in fabricating work specified in this Section with minimum five years experience.

1.4 DELIVERY, STORAGE, AND HANDLING

A. Deliver, store, and handle products in accordance manufacturer's instructions.

B. Provide protective coverings of suitable material. Take special precautions at corners.

1.5 WARRANTY

A. Furnish warranty against defects in material for 10 years. Include material and labor to repair or replace defective materials.

PART 2 - PRODUCTS

2.1 MANUFACTURERS AND PRODUCTS

A. Acceptable Manufacturers:
   1. CaesarStone USA, Van Nuys, CA.
   2. Cambria, Eden Prairie, MN.
   3. Silestone, Cosentino USA, Stafford, TX.
   4. Zodiaq by DuPont.

2.2 MATERIALS

A. Quartz Countertop Composition: 93 percent crushed quartz aggregate combined with resins and pigments and fabricated into slabs using a vacuum vibro-compaction process.
   1. Basis of Design: Refer to Finish Schedule on Drawing Sheet A600.

B. Material certified by NSF International for food and water contact.

C. GreenGuard certified as low-emitting material.

05/03/13 PERMIT SET

D. Identification: Label material with batch number and imprint on back with manufacturer's identifying mark.

E. Physical Properties:
1. Flexural Strength: 7,400 psi min, ASTM C880.
2. Absorption: Less than 0.02 percent, ASTM C97
3. Mohs Hardness: 6.5-7.5; scratch test.
4. Stain and Acid Resistance: Not affected; ASTM D2299.
5. Wear Resistance: 36.12 gram average; ASTM C501, tested with 1 kg. load, 1000 cycles at 70 rpm.
6. Surface Burning: Flame Spread 10; Smoke Density 195; ASTM E84.
7. Thermal Shock Resistance: Passes 5 cycles, 75 – 295 degrees F; ASTM C484.

2.3 ACCESSORIES

A. Mastic: Type recommended by manufacturer.

B. Seam Adhesive: Type recommended by manufacturer; color to blend with sheet material.
1. Adhesives shall meet or exceed the VOC and chemical component limits of Cal-GREEN Table 5.504.4.1 Adhesive VOC Limit requirements.

C. Sealants: Type recommended by manufacturer.
1. Sealants shall meet or exceed the VOC and chemical component limits of Cal-GREEN Table 5.504.4.2 Sealant VOC Limit requirements.

D. Solvent: As recommended by adhesive manufacturer to clean surface of quartz surfacing to assure adhesion of adhesives and sealants.

2.4 COUNTERTOP FABRICATION

A. General: Assemble work at shop and deliver to project ready for installation. Fabricated in largest practical lengths with seams in least conspicuous locations.
1. Countertops:
   a. Molded countertop of solid polymer material.
   b. Provide edge details as indicated.
   c. Provide with apron, coved backsplash, and endsplash where indicated on Drawings.
2. Fabricate work square and to required lines.
3. Recess and conceal fasteners, connections, and reinforcing.
4. Design construction and installation details to allow for expansion and contraction of materials. Properly frame material with tight, hairline joints held rigidly in place.
5. Comply with adhesive manufacturer's recommendations for adhesive shelf life, pot life, working life, mixing, spreading, assembly time, time under pressure and ambient temperature.
6. Fabricate items to profiles shown with connections and supports as detailed or as required for proper installation per manufacturer's recommendations.
7. Provide cut-outs for plumbing fixtures and trim, washroom accessories, appliances, and related items. Confirm lay-out with manufacturer's cut-outs templates before beginning work. Round corners of cut-outs and sand edges smooth.
8. Polish edges and returns that will be exposed to view or food contact.
9. Do not exceed manufacturer's recommended unsupported overhang distances.

B. Fabricate quartz countertop and splashes to following thicknesses; unless indicated otherwise:
1. Countertop: 3/4-inch.

PART 3 - EXECUTION

3.1 EXAMINATION

A. Examine conditions and proceed with work when substrates are ready.

3.2 INSTALLATION

A. Install in accordance with manufacturer's instructions and approved Shop Drawings.

1. Install units plumb, level, square, and free from warp or twist while maintaining dimensional tolerances and alignment with surrounding construction.
2. Allow gaps for expansion of not less than 1/16-inch per five feet when installed between walls or other fixed conditions.
3. Apply dabs of mastic on supports; place items on supports and securely attach.

B. Splashes: Install splashes at back and sides of countertops using mastic. Apply mastic to back surface only. Place thin bead of seam adhesive along edge where splashes seat.
   1. Seal joint between countertop and splashes and between splashes and walls with color coordinated Sealant Designation S-S as specified in Section 079200.

3.3 CLEANING AND PROTECTION

A. Clean as recommended by manufacturer. Do not use materials or methods which may damage surface or surrounding construction.
   1. Promptly remove excessive mastic and seam adhesive.

B. Protect finished work.

END OF SECTION

05/03/13 PERMIT SET

SECTION 210501

FIRE PROTECTION GENERAL PROVISIONS

PART 1 - GENERAL

1.1 DESCRIPTION

A. The General and Supplementary Conditions and Division 1 are a part of the requirements for the work under this Division of the Specification.

B. The project will have selected building systems commissioned. The equipment and systems to be commissioned are specified in Division 1, Section 019113, General Commissioning Requirements. The commissioning process and contractor responsibilities are described in the section. It is the responsibility of the contractor under this Division to refer to Division 1, Section 019113, General Commissioning Requirements, and coordinate with other trades as required.

1.2 WORK INCLUDED

A. Provide labor and materials required to install, test and place into operation the fire protection systems as called for in the Contract Documents and according to applicable codes and regulations.

B. Provide labor, materials and accessories required to provide complete operating fire protection systems as described or which may be reasonably implied as essential for a complete operating system.

1.3 QUALITY ASSURANCE

A. Comply with current governing codes, ordinances and regulations of the Authority or Authorities Having Jurisdiction over any part of the work and secure all necessary permits. Comply with the regulations and requirements of the Owner's insurance underwriter.

B. Where codes or standards are referenced, the applicable portions apply.

C. Drawings, specifications, codes and standards are minimum requirements. Where requirements differ, apply the more stringent.

D. Should any change in drawings or specifications be required to comply with governing regulations, notify the Engineer prior to submitting bid.

E. Execute work in strict accordance with the best practices of the trades in a thorough, substantial, skillful and well-executed manner by competent workers. Provide a competent, experienced full-time Superintendent who is authorized to make decisions on behalf of the Contractor.

F. The Engineer or Engineer's Representative may conduct unannounced field reviews of any work completed or in progress during the Contractor's working hours. A report will be issued to the Contractor if the field review of the fire protection systems construction has revealed elements of the work, which are inconsistent with the Contract Documents. All items in the report shall be addressed in writing by the Contractor within two (2) weeks and corrections in the field shall be made as directed.

1.4 ABBREVIATIONS AND DEFINITIONS

A. Abbreviations:

1. ANSI American National Standards Institute
2. ASME American Society of Mechanical Engineers
3. ASTM American Society for Testing and Materials
4. AWWA American Water Works Association
5. IEEE Institute of Electrical and Electronic Engineers
6. NEMA National Electrical Manufacturers Association
7. NFPA National Fire Protection Association
8. OSHA Occupational Safety and Health Administration
9. UL Underwriters Laboratories Inc.

05/03/13 PERMIT SET

B. Definitions:
   1. Where it is stated in the specifications to submit to Engineer for review, refer to Architectural General and Special Conditions for proper procedures.
   2. “PROVIDE” means to “Furnish” and “Install”.
   3. “INSTALL” means to join, unite, fasten, link, attach, set up or otherwise connect together before testing and turning over to Owner, complete and ready for regular operation.
   4. “FURNISH” means to supply all materials, labor, equipment, testing apparatus, controls, tests, accessories and all other items customarily required for the proper and complete application.
   5. “AS DIRECTED” means as directed by the Engineer or the Engineer's Representative.
   6. “CONCEALED” means embedded in masonry or other construction, installed behind wall furring or within double partitions, or installed within hung ceilings.
   7. “SUBMIT” means submit to the Engineer for review.

1.5 GUARANTEE

A. Submit a single guarantee stating that the work is in accordance with Contract Documents. Guarantee work against faulty and improper material, fabrication, installation, start-up and commissioning for a period of one (1) year from date of final acceptance by the Owner, except that where guarantees or warranties for longer terms are specified herein, the longer term shall apply. Correct any deficiencies, which occur during the guarantee period, within 24 hours of notification, at no additional cost to the Owner, to the satisfaction of the Owner. Obtain similar guarantees from subcontractors, manufacturers, suppliers and sub-trade specialists.

1.6 USE OF THE ENGINEER'S DRAWINGS

A. The Contractor shall obtain, at the Contractor’s expense, from the Engineer or Engineer a set of AutoCAD or compatible format architectural and engineering drawings on electronic media where desired by the Contractor and/or required by the Specifications for use in preparing the shop drawings, coordination drawings, and record drawings. The Contractor shall provide to the Engineer a written release of liability acceptable to the Engineer prior to receiving the electronic media files.

PART 2 - PRODUCTS

2.1 EQUIPMENT AND MATERIALS

A. Provide products and materials that are new, clean, free of defects and free of damage and corrosion.

B. Products and materials shall not contain asbestos, PCBs or any other material that is considered hazardous by the Environmental Protection Agency or any other Authority Having Jurisdiction.

C. Replace materials of less than specified quality and relocate work incorrectly installed as directed by the Engineer.

D. Provide name/data plates on major components of equipment with manufacturer’s name, model number, serial number, capacity data and electrical characteristics attached in a conspicuous place.

E. Install materials and equipment with qualified trades people.

F. Maintain uniformity of manufacture for equipment used in similar applications and sizes.

G. Applicable equipment and materials to be listed by Underwriters Laboratories and manufactured in accordance with ASME, AWWA, or ANSI standards, and as approved by Authorities Having Jurisdiction. The energy-using products shall be certified for use in the State of California and meet State energy efficient standards.

H. Fully lubricate equipment when installed.

I. Install floor-mounted equipment on a 4-inch high concrete pad. Concrete work shall be provided by another trade. Coordinate size and location with actual equipment used and accepted layout shop drawings.

05/03/13 PERMIT SET

J. Secure equipment with bolts, washers and locknuts of ample size to support equipment. Embedded anchor bolts to have bottom plate and pipe sleeves. Grout machinery set in concrete under entire bearing surface. After grout has set, remove wedges, shims and jack bolts and fill space with grout.

K. Locate valves, dielectric unions, access doors, etc., to be easily accessible, either in mechanical spaces or through access panels specified. Obtain Engineer's approval of access panel locations.

L. Follow manufacturers' recommendations and instructions for installing, connecting, and adjusting equipment. Provide a copy of such instructions at the equipment during installation.

M. Equipment capabilities, etc., are scheduled or specified for job site operating conditions. Equipment sensitive to altitude shall be derated with the method of derating identified on shop drawings.

2.2 ALTERNATIVE EQUIPMENT AND MATERIALS

A. Contract Documents are based on materials specified and on equipment manufacturers indicated. Acceptance of alternative equipment manufacturers does not relieve Contractor of the responsibility to provide equipment and materials, which meet the quality and performance as stated or implied in the Contract Documents.

B. Equipment manufacturers listed in individual sections are acceptable for this project, subject to requirements of Contract Documents.

C. Submit proposals to supply alternate materials or equipment, in writing, with sufficient lead time for review prior to the date equipment must be ordered to maintain project schedule. Reimburse Owner for costs associated with the review of the proposed alternative whether alternative is accepted or rejected.

D. Include revisions required to adapt alternatives in such proposals, including revisions by other trades. No increase in the contract price will be considered to accommodate the use of alternative equipment.

E. Wherever quality standards (such as serviceability, longevity or durability) and operating results (such as noise levels, quantity delivered or pressure obtained) are specified or scheduled, or when the manufacturer and size of equipment, for which such operating results are published or determinable, is specified, the substitution being proposed must conform substantially to the quality and quantities specified or implied. The substitution must fit into available space conditions and must function properly in coordination with the rest of the system.

F. Proposed changes and substitutions of systems, equipment and manufacturers shall be submitted and include the following information with the proposal:
   1. A description of the difference between the existing contract requirements and that proposed, the comparative features of each, and the effect of the change on the end result performance. Include the impact of all changes on other contractors and acknowledge the inclusion of additional costs to other trades.
   2. Schematic drawings and details to supplement the description.
   3. A list of the contract requirements that must be revised if the change is accepted, including any specification revisions.
   4. Complete list of materials and equipment proposed for use in the change.
   5. Include a description and estimate of costs the Owner may incur in implementing the change, such as additional space requirements, permits, architectural and aesthetic impact, design costs, tests, permits evaluation, operating and support costs.
   6. A projection of any effects the proposed change would have on collateral costs to the Owner.
   7. A statement of the time by which a contract modification accepting the change must be issued, noting any effect on the contract completion time or the delivery schedule.
   8. A statement indicating the reduction to the contract price if the Owner accepts the change. Be responsible for appropriate modifications to all trades.

05/03/13 PERMIT SET

PART 3 - EXECUTION

3.1 FEES

A. Pay all required fees and obtain required permits related to the fire protection installation.

B. Pay royalties or fees in connection with the use of patented devices and systems.

C. Provide controlled or witnessed inspection where required by Authorities Having Jurisdiction or by these specifications.

3.2 SUBMITTALS AND REVIEWS

A. Submit shop drawings, manufacturer's data, samples and test reports as specified.

B. Within two (2) months after notice to proceed by the Owner or Owner's Representative, or after execution of Owner/Contractor Agreement, submit a complete typed list of all fire protection equipment manufacturers and material suppliers for the equipment proposed to be provided on this project as well as names of all subcontractors.

C. Within three (3) months after notice to proceed by the Owner or Owner's Representative or after execution of Owner/Contractor Agreement, prepare an index of all submittals for the project. Include a submittal identification number, a cross-reference to the specification sections or drawing number, and an item description. Prefix the submittal identification number by the specification sections to which they apply. Indicate, on each submittal, the submittal identification number in addition to the other data specified. All subcontractors shall utilize the assigned submittal identification number.

D. After the Contract is awarded, obtain complete shop drawings, product data and samples from the manufacturers, suppliers, vendors, and all subcontractors, for all materials and equipment as specified. Submit data and details of such materials and equipment for review. Prior to submission, certify that the shop drawings, product data and samples are in compliance with the Contract Documents. Check all materials and equipment upon their arrival on the job site and verify their compliance with the Contract Documents. Modify any work, which proceeds prior to receiving accepted shop drawings as required to comply with the Contract Documents and the shop drawings.

E. Review of submittals is for general compliance with the design concept and Contract Documents. Comments or absence of comments does not relieve the Contractor from compliance with the Contract Documents. The Contractor remains solely responsible for details and accuracy, for confirming and correlating all quantities and dimensions, for selecting fabrication processes, for techniques of construction, for performing the work in a safe manner, and for coordinating the work with that of other trades.

F. No part of the work shall be ordered, procured, started in the shop or in the field until the shop drawings and samples for that portion of the work have been submitted, reviewed and returned with either "No Exceptions Noted" or "Exceptions Noted" marked on the submission.

G. A minimum period of ten (10) working days, exclusive of transmittal time, will be required in the Engineer/Architect's office each time a shop drawing, product data and/or samples are submitted for review. This time period must be considered by the Contractor in the scheduling of the work.

H. Submit two (2) bond prints of all items requiring shop drawings. Submit three (3) copies of manufacturer's product submittals organized by specification section number. Submittals not organized by specification will be returned without review. One (1) bond print or two (2) copies of submittals will be returned. Additional copies are the responsibility of the Contractor. Electronic media will not be reviewed.

I. Submissions will be stamped as follows:

Stamp	Interpretation
No Exceptions Noted	Fabrication, manufacture, or construction may proceed providing submittal complies with the Contract Documents.

05/03/13 PERMIT SET

Stamp	Interpretation
Exceptions Noted: [ ] Resubmit for Record [ ] No Resubmission Required	Fabrication, manufacture, or construction may proceed providing submittal complies with the Contract Documents and Engineer's notations are complied with. Within this category are two options. A resubmission for our records is required when corrections are necessary. A resubmission is not required if there are only minor comments.
Revise and Resubmit	The submittal does not comply with the Contract Documents; do not proceed with fabrication, manufacture, or construction. The work and shop drawings are not permitted at the job site. Resubmit appropriate shop drawings.

J. Submit materials and equipment by manufacturer, trade name and model number. Include clear, legible copies of applicable brochure or catalog material. Maintenance and operating manuals are not suitable substitutes for shop drawings.

K. Identify each sheet of printed submittal pages (using arrows, underlining or circling) to show applicable sizes, types, model numbers, ratings, capacities and options actually being proposed. Cross out non-applicable information. Note specified features such as voltages, motor efficiencies, special tank linings, pump seals, materials or paint finishes. Cross out all references to "options". Cross out statements such as "subject to change without notice" or "not for construction". Anything not specifically excluded is assumed to be included.

L. Include dimensional data for roughing in and installation, technical data sufficient to verify that equipment meets requirements of the Contract Documents. Include wiring, piping and service connection data, motor sizes complete with voltage ratings, and schedules.

M. Maintain a complete set of the most current reviewed and stamped shop drawings and product data on site.

N. Prepare and submit detailed shop drawings for piping work and other distribution services in minimum 1/4-inch to 1-foot scale, including elevations and locations and sizes of openings in floor decks, walls and roofs.

O. The work described in shop drawing and product data submittals shall be carefully checked by all trades for clearances (including those required for code compliance, maintenance and servicing), field conditions, maintenance of architectural conditions and proper coordination with other trades on the job. Each submitted shop drawing to include a certification that related field conditions and requirements have been checked by all Contractors and Subcontractors and that conflicts do not exist.

P. The Contractor is not relieved of the responsibility for dimensions or errors that may be contained on submissions or for deviations from requirements in the Contract Documents. The noting of some errors but overlooking others does not grant the Contractor permission to proceed in error. Regardless of any information contained in the shop drawings, product data and samples, the Contract Documents govern the work and are neither waived nor superseded in any way by the review of shop drawings, product data and samples.

Q. Inadequate or incomplete shop drawings, product data and/or samples will not be reviewed and will be returned to the Contractor for resubmittal.

R. Indicate the following in the lower right hand corner of each shop drawing, and on the front cover of each product data brochure: the submittal identification number; title of the sheet or brochure; name and location of the Project; names of the Architect, Engineer, Contractor, Subcontractor, Manufacturer, Supplier, and Vendor; the date of submittal; and the date of each correction, version and revision. Number all pages and drawings in product data brochures, test reports or submittals consecutively from beginning to end. Unless the above information is included, the submittal will

05/03/13 PERMIT SET

be returned for resubmission. Resubmittals of shop drawings or product data or brochures shall include a cover letter summarizing the corrections made in response to the review comments.

3.3 COORDINATION OF WORK

A. The Contract Documents establish scope, materials and quality but are not detailed installation instructions. Drawings are diagrammatic.

B. The Contract Documents show the general arrangement of equipment, ductwork, piping and accessories. Follow these drawings as closely as the actual construction and the work of other trades will permit. Provide offsets, fittings, and accessories, which may be required but not shown on the Drawings. Investigate the site and review drawings of other trades to determine conditions affecting the work and provide such work and accessories as may be required to accommodate such conditions.

C. Certain products will be provided by other trades. Examine the Contract Documents to ascertain the requirements for installation of these products.

D. Carefully check space requirements with other trades to insure that material can be installed in the spaces allotted.

E. Wherever work interconnects with work of other trades, coordinate with other trades to insure that they have the information necessary so that they may properly install the necessary connections and equipment. Identify items (valves, etc.) requiring access in order that the ceiling and partition contractors can install access doors and panels in the correct locations.

F. Consult with other trades regarding equipment so that, wherever possible, motors, motor controls, pumps and valves are of the same manufacturer.

G. Furnish and set sleeves for passage of pipes and conduits through structural masonry and concrete walls, roofs and floors and elsewhere as will be required for the proper protection of each pipe passing through building surfaces.

H. Install firestopping around all pipes, conduits, etc., which pass through rated walls, partitions and floors in strict accordance with the manufacturer's published approval listing and rating.

I. Provide detailed information on openings and holes required in structural elements and pre-cast panels or components for fire protection work.

J. Provide required structural or architectural supports and hangers for piping and equipment, designed so as not to exceed allowable loadings of structures.

K. Examine and compare the Contract Drawings and Specifications with the drawings and specifications of other trades, report any discrepancies between them to the Engineer and obtain written instructions for changes necessary in the work. Install and coordinate the work in cooperation with other related trades. Before installation, make proper provisions to avoid interferences.

L. Wherever the work is of sufficient complexity, prepare additional detail drawings to scale to coordinate the work with the work of other trades. Detailed work shall be clearly identified on the Drawings as to the area to which it applies. Submit these drawings to the Engineer for review. At completion include a set of these drawings with each set of record drawings.

M. Before commencing work, examine adjoining work on which this work is in any way dependent and report conditions that prevent performance of the work. Become thoroughly familiar with actual existing conditions to which connections must be made or which must be changed or altered.

N. Adjust location of pipes, panels, equipment, etc., to accommodate the work to prevent interferences, both anticipated and encountered. Determine the exact route and location of each pipe prior to fabrication.

1. Right-of-Way: Lines which pitch have right-of-way over those which do not pitch. For example, condensate, and plumbing drains normally have right-of-way. Lines whose elevations cannot be changed have right-of-way over lines whose elevations can be changed.

05/03/13 PERMIT SET

2. Provide offsets and changes in direction of pipes as required to maintain proper head room and pitch on sloping lines. Provide traps, air vents, drains, etc., as required to effect these offsets and changes in direction.

O. Install fire protection work to permit removal (without damage to other parts) of controls, sheaves and drives, and any other parts requiring periodic replacement or maintenance. Arrange pipes and equipment to permit access to valves, starters, motors, and control components, and to clear the openings of swinging doors and access panels.

P. In cases of doubt as to the work intended, or in the event of need for explanation thereof, request supplementary instructions from the Engineer.

3.4 CONTRACTOR'S COORDINATION DRAWINGS

A. The Contractor shall coordinate efforts of all trades and shall furnish (in writing, with copies to the Engineer) any information necessary to permit the work of all trades to be installed satisfactorily and with the least possible interference or delay.

B. The Contractor and all trade contractors shall prepare a complete set of construction Coordination Drawings indicating the equipment actually purchased and the exact routing for all lines such as piping, busway, conduit, ductwork, etc., including conduit embedded in concrete floors and walls. The Coordination Drawings shall be submitted complete to the Engineer and the Architect within three (3) months after notice to proceed is given and in compliance with the construction schedule for the project. The sheet metal drawings, at a scale of not less than 1/4-inch to 1-foot, shall serve as the base drawings to which all other Contractors shall add their work. Each separate Trade Contractor shall draw their work on separate layers with different color assignments to facilitate coordination. Each Coordination Drawing shall be completed and signed off by the other Trade Contractors and the Contractor prior to the installation of the HVAC, plumbing, electrical, fire protection and fire sprinkler work in the area covered by the specific drawing. The Contractor's work shall be installed according to the shop drawings and Coordination Drawings. If the Contractor allows one trade to install their work before coordination with the work of other trades, the Contractor shall make all necessary changes to correct the condition at no additional cost to the Owner.

C. The Contractor's Coordination Drawings shall indicate structural loads at support points for all piping 10-inch and larger, racked piping, racked conduit and busway. Submit to Structural Engineer for review and approval. The elevation, location, support points, static, dynamic and expansion forces and loads imposed on the structure at support and anchor points shall be indicated. All beam penetrations and slab penetrations shall be indicated and sized and shall be coordinated. Work routed underground or embedded in concrete shall be indicated by dimension to column and building lines and shall be coordinated. Coordination Drawings shall document all required structural penetrations for initial construction. Penetrations shall be dimensioned for walls, floors and roofs. These structural coordination requirements require review and approval by the Structural Engineer prior to completion and submittal of the Drawings.

D. This requirement for Coordination Drawings shall not be construed as authorization for the Contractor or trade contractors to make any unauthorized changes to the Contract Documents. Contract document space allocations shall be maintained such as ceiling height, designated clearance for future construction and flexibility, chase walls, equipment room size, unless prior written authorization is received from the Engineer to change them.

E. Prior to final acceptance of the work, the Contractor shall submit the Coordination Drawings as part of the Record Drawing submittal.

3.5 EXAMINATION OF SITE

A. The Contract Documents do not make representations regarding the character or extent of the subsoils, water levels, existing structural, mechanical and electrical installations, above or below ground, or other sub-surface conditions which may be encountered during the work.

B. Evaluate existing conditions that may affect methods or cost of performing the work, based on examination of the site or other information. Failure to examine the Drawings or other information does not relieve the Contractor of responsibility for satisfactory completion of the work.

3.6 EXCAVATION AND BACKFILL

A. Provide excavation for the work of this Division. Excavate all material encountered, to the depths indicated on the Drawings or as required. Remove excavated materials not required or suitable for backfill from the site. Provide grading as may be necessary to prevent surface water from flowing into trenches or other excavations. Remove any water that accumulates. Provide sheeting and shoring as may be necessary for the protection of the work and for the safety of personnel.

B. Provide trenches of widths necessary for the proper execution of the work. Grade bottom of the trenches accurately to provide uniform bearing and support the work on undisturbed soil at every point along its entire length. Except where rock is encountered, do not excavate below the depths indicated. Where rock excavations are required, excavate rock to a minimum overdepth of four inches below the trench depths indicated on the Drawings or as required. Backfill overdepths in the rock excavation and unauthorized overdepths with loose, granular, moist earth, thoroughly machine tamped to a compaction level of at least 95 percent of standard proctor density or 75 percent relative density or as specified by the Engineer. Whenever unstable soil that is incapable of properly supporting the work is encountered in the bottom of the trench, remove soil to a depth required and backfill the trench to the proper grade with coarse sand, fine gravel or other suitable material.

C. Excavate trenches for utilities that will provide the required minimum depths of cover from existing grade or from indicated finished grade, whichever is lower, unless otherwise specifically shown.

D. Trenches shall not be placed within ten (10) feet of foundation or soil surfaces that must resist horizontal forces.

E. Do not backfill trenches until all required tests have been performed and the installation observed by the Engineer. Comply with the requirements of other sections of the specifications. Backfill shall consist of non-expansive material with limited porosity. Deposit backfill in 6-inch thick layers and tamp carefully until the fire protection work is covered by not less than 12 inches of material. Backfill and tamp remainder of trench at 1-foot intervals until complete. Uniformly grade the finished surface.

3.7 CUTTING AND PATCHING

A. Where cutting, channeling, or drilling of floors, walls, partitions, ceilings or other surfaces is necessary for the proper installation, support or anchorage of piping or equipment, lay out the work carefully in advance. Repair any damage to the building, piping, equipment or finishes using skilled tradesmen for all required work.

B. Do not cut, channel or drill unfinished masonry, tile, etc. unless written permission is obtained from the Engineer. Perform this work in a manner acceptable to the Engineer.

C. Where piping or equipment are mounted on a painted finished surface, or a surface to be painted, paint to match the surface. Cold galvanize bare metal whenever support channels are cut.

D. Provide slots, chases, openings and recesses through floors, walls, ceilings and roofs as required. Where these openings are not provided, provide cutting and patching to accommodate penetrations at no additional cost to the Owner.

3.8 PROHIBITED LABELS AND IDENTIFICATIONS

A. Prohibited Markings: In all public areas, tenant areas, storage areas and similar locations within the project, the inclusion or installation of any equipment, fixture or assembly which bears on any exposed surface any name, trademark, or other insignia which is intended to identify the manufacturer, the vendor, or other source(s) from which such object has been obtained, is prohibited.

B. Exception: Required Underwriters Laboratories labels shall not be removed nor shall identification specifically required under the various technical sections of the Specifications be removed.

3.9 EQUIPMENT PAD AND ANCHOR BOLTS

A. Provide concrete pads under all floor-mounted fire protection equipment. This includes electrical components, equipment mounted on legs and pipe support stands. Equipment pads shall

05/03/13 PERMIT SET

conform to the shape of the piece of equipment it serves with a minimum 2-inch margin around the equipment and supports. Pads shall be a minimum of 4 inches high and made of a minimum 28-day, 2500-psi concrete reinforced with 6-inch by 6-inch 6/6-gauge welded wire mesh. Trowel tops and sides of pad to smooth finishes, equal to those of the floors, with all external corners bullnosed to a 3/4-inch radius. Use shop drawings stamped “NO EXCEPTIONS NOTED” or “EXCEPTIONS NOTED” for dimensional guidance in sizing pads.

B. Provide galvanized anchor bolts for all equipment placed on concrete equipment pads, inertia blocks, or on concrete slabs. Verify bolts size, number and embed depth recommended by the manufacturer of the equipment with seismic calculations as specified, and locate by means of suitable templates.

C. Where equipment is mounted on gypsum board partitions, the mounting screws will pass through the gypsum board and be securely attached to the partition studs. As an alternative, the mounting screws may pass through the gypsum board and be securely attached to 6-inch square, 18-gauge galvanized metal backplates that are attached to the gypsum board with an approved non-flammable adhesive. Toggle bolts installed in gypsum board partitions are not acceptable.

3.10 DELIVERY, DRAYAGE AND HAULING

A. Include all drayage, hauling, hoisting, shoring and placement in the building of equipment specified and be responsible for the timely delivery and introduction of equipment to the project as required by the construction schedule. If any item of equipment is received prior to the time it is required, be responsible for its proper storage and protection until the time it is required. Pay for all costs of demurrage or storage.

B. If equipment is not delivered or installed at the project site in a timely manner as required by the project construction schedule, the Contractor shall be responsible for disassembly, re-assembly, manufacturer’s supervision, shoring, general construction modification, delays, overtime costs, etc., at no additional cost to the Owner.

3.11 EQUIPMENT AND MATERIAL PROTECTION

A. Protect the work, equipment and material of other trades from damage by work or workers of this trade, and correct damage caused without additional cost to the Owner.

B. The Contractor shall be responsible for all work, materials and equipment until finally inspected, tested and accepted. Protect work against theft, injury or damage; and carefully store material and equipment received on site that is not immediately installed. Close open ends of work with temporary covers or plugs during construction to prevent entry of dust, dirt, water or other obstructing material. Cover and protect equipment and materials from damage due to water, moisture, humidity, paint, spray-on fireproofing, construction debris, etc. Store equipment subject to moisture damage, such as insulation or electrical components in dry heated spaces.

C. Provide adequate means for fully protecting finished parts of the materials and equipment against damage from whatever cause during the progress of the work until final acceptance. Protect materials and equipment in storage and during construction in such a manner that no finished surfaces will be damaged or marred, and moving parts are kept clean and dry. Do not install damaged items; take immediate steps to obtain replacement or repair. Replace all wet or damp insulation.

3.12 ELECTRICAL EQUIPMENT AND ELECTRICAL ROOM PRECAUTIONS

A. Do not install piping or equipment above switchboards, disconnects, panelboards, dimmers, control panels, VFDs, motor control centers, individual motor controllers, electronics, etc or the code-required service space for these electrical devices.

3.13 EQUIPMENT GUARDS

A. Provide easily (without tools) removable expanded metal guards for all hot surfaces, belts, couplings, and other moving parts of machinery. Provide tachometer openings in the guards at least 2 inches in diameter, for all belt-driven, gear-driven or variable speed machinery. Comply with OSHA requirements for all equipment guards.

05/03/13 PERMIT SET

3.14 LUBRICATION

A. Provide means for lubricating all bearings and other machine parts. If a part requiring lubrication is concealed or inaccessible, extend a metallic lubrication tube with suitable fitting to an accessible location and identify it with permanent laminated plastic nameplates. Identify this location in the maintenance manual.

B. After installation, properly lubricate all parts requiring lubrication and keep them adequately lubricated with a lubricant recommended by the equipment manufacturer until Owner acceptance.

3.15 DATE OF COMPLETION AND TESTING OF FIRE PROTECTION SYSTEMS

A. Comply with the project construction schedule for the date of final performance and acceptance testing, and complete work sufficiently in advance of the Contract completion date to permit the execution of the testing prior to occupancy and the Contract closeout. Complete any adjustments and/or alterations that the final acceptance tests indicate as necessary for the proper functioning of all equipment prior to the completion date. See individual sections for extent of testing required.

B. Provide a detailed schedule of completion indicating when each system is to be completed and outlining when tests will be performed. Submit completion schedule for review within three (3) months after the notice to proceed by Owner or Owner's Representative has been given. Update this schedule periodically as the project progresses.

3.16 OPERATING INSTRUCTIONS AND OPERATOR TRAINING

A. Provide the services of factory-trained specialists to supervise the operation of all equipment and systems specified and train the Owner's operating and maintenance personnel for a three (3) day operating/instruction period. Operating instruction time is defined as straight time working hours and not including nights, weekends or travel time to and from the project. Refer to individual sections for additional training and instruction by manufacturer's trained specialists.

B. Notify the Owner in writing at least three (3) weeks before the operating/instruction period begins. Do not commence until the Owner has issued written acceptance of the starting time and schedule.

C. In addition to the operating/instruction period, organize and conduct a seminar to instruct the Owner's Representatives in the operation and general preventative maintenance of equipment and systems provided at the completion of the project.

D. Instruct Owner's operating personnel in proper starting sequences, operation, shut-down, and maintenance procedures, including normal and emergency procedures.

E. Make arrangements to give instructions by system and not by building areas.

F. Provide services of qualified personnel, including each sub-trade, each major equipment supplier to attend seminar and instruct on respective equipment or systems. Seminar shall be conducted by the Contractor and may be videotaped and attended by the Engineer or Engineer's Representative.

G. Submit seminar agenda, schedule and list of representatives to the Owner for review thirty (30) days prior to seminar. Confirm attendance at seminar by written notification to participants.

H. At seminar, submit final copies of record drawings and operating and maintenance manuals to Owner.

I. Submit a written record of the seminar, complete with an attendance list to the Owner.

3.17 OPERATING AND MAINTENANCE MANUALS

A. Provide operating instructions and maintenance manuals for all equipment and materials furnished under this Division.

B. Submit three (3) final copies of operating and maintenance data books for review at least ten (10) weeks before the completion date. Provide 8.5-inch by 11-inch, expanding spine catalog binders bound with heavy red fabric; hot stamp lettering on front and spine identifying project name and Owner's name. Assemble data in a completely indexed volume or volumes and identify the size, model, and features indicated for each item.

05/03/13 PERMIT SET

C. Index the maintenance manual according to the following system:
   1. Tab – 1.0 Fire Protection Systems: Title page identifying project, Owner, Contractor and Engineer with clear plastic protection cover.
   2. Tab – 1.1 List of Fire Protection Drawings.
   3. Tab – 1.2 Description of Systems: Provide complete descriptions of the operating sequence for each system. Include detailed system description, with individual components described, and description of how components interface with others and to the complete system.
   4. Tab – 1.3 Operating Division: Provide information on locations of components, how to energize switches and controls, how components interface with other components, operation of controls including operational sequence, complete troubleshooting sequence, and failure and safeguards to indicate if equipment goes off-line.
   5. Tab – 1.4 Maintenance and Lubrication Division: Provide general maintenance and lubrication schedule for major components and include daily, weekly, monthly, quarterly, semiannual and yearly checks and tasks. Explain how to execute maintenance tasks required for typical equipment such as bearings, drives and motors. Compile this information for equipment separate from shop drawings.
   6. Tab – 1.5 List of Equipment Suppliers and Contractors: Provide list of equipment suppliers and contractors, including street addresses, website addresses, fax and toll-free telephone numbers.
   7. Tab – Certification (2.0, 2.1, etc.): Include copy of test data on hydrostatic tests performed on piping systems, equipment alignment certifications, copy of pipe color code and inspection approval certificates from State Fire Marshal.
   8. Tab – Shop Drawings and Maintenance Bulletins (3.0, 3.1, 3.2, etc.): Provide material received in compliance with clause “Submittals and Reviews”.

D. The manual divider and tabs shall be laminated mylar plastic and colored as follows:

Fire Protection Systems	1.0	–	1.5	Orange
Certification	2.0	–	2.4	Green
Shop Drawings & Maintenance	3.0	–	3.17	Yellow

E. Plastic tabs with typewritten card insertions will not be accepted.

F. Maintenance information shall include complete lubrication, cleaning, and servicing data compiled in clearly and easily understandable format. Show model and serial number of each piece of equipment, complete lists of replacement parts, capacity ratings, and actual loads.

G. Provide the following equipment maintenance information where applicable:
   1. Identifying name and number
   2. Locations (where several similar items are used, provide a list)
   3. Complete nameplate data
   4. Parts list
   5. Performance curves and data
   6. Wiring diagrams
   7. Lubrication charts
   8. Manufacturers’ recommended operating and maintenance instructions, with all non-applicable information deleted
   9. List of spare parts recommended for normal service requirements
   10. Assembly and disassembly instructions with exploded view Drawings, where necessary
   11. Trouble shooting diagnostic instructions, where applicable

3.18 RECORD DRAWINGS

A. The Contractor shall maintain on a daily basis at the project site a complete set of Record Drawings. The Record Drawings shall initially consist of a set of blueline prints or AutoCAD files of the Contractor’s Coordination Drawings. The prints shall be marked or the AutoCAD files electronically updated to show the precise location of all buried or concealed work and equipment, including embedded piping and valves, and all changes and deviations in the fire protection work from that shown on the Contract Documents. This requirement shall not be construed as authorization for the Contractor to make changes in the layout or work without definite written instructions from the Engineer or Architect. The updated Coordination Drawings shall be used to

05/03/13 PERMIT SET

produce the final Record Drawings that shall be delivered to the Owner in AutoCAD electronic format media upon project completion.

B. Record dimensions clearly and accurately to delineate the work as installed. Suitably identify locations of all equipment by at least two (2) dimensions to permanent structures.

C. The Contractor and subcontractor shall mark all in-progress Record Drawings on the front lower right hand corner with a rubber stamp impression or an AutoCAD image similar to the following:

RECORD DRAWING
(3/8-inch high letters)

To be used for recording Field Deviations
and Dimensional Data Only
(5/16-inch high letters)

D. Upon completion of the work, the Contractor and subcontractors shall certify all Record Drawings on the front lower right hand corner adjacent to the above marking with a rubber stamp impression or an AutoCAD image similar to the following:

RECORD DRAWING
CERTIFIED CORRECT
(3/8-inch high letters)

(Printed Name of General Contractor)
(5/16-inch high letters)

Date:

(Printed Name of Subcontractor)
(5/16-inch high letters)

Date:

E. Prior to final acceptance of the work of this Division, the Contractor shall submit properly certified Record Drawings to the Engineer or Architect r for review and shall make changes, corrections, or additions as the Engineer and/or Engineer may require to the Record Drawings. After the Engineer's and Engineer's review, and any required Contractor revisions, the Record Drawings shall be delivered to the Owner on electronic media in AutoCAD format. The Engineer and Engineer do not assume any responsibility for the accuracy or completeness of the Record Drawings.

3.19 CERTIFICATION

A. Any certifications required by the Specifications, in addition to those required for shop drawings, product data, equipment and other items, are to be so certified in writing by the Owner, a Partner, or a Corporate Officer of the firm required to provide the Certification, or by another person duly authorized to sign binding agreements for and on behalf of the Owner, Partner or Corporation.

3.20 FINAL REVIEW

A. At a time designated by the Owner, the entire system shall be reviewed for compliance with the Contract Drawings and Specifications. Be available at all times during this review.

B. Demonstrate to the Owner and/or the Engineer's personnel prior to the Final Review that systems and equipment have been properly balanced and adjusted and are in compliance with the requirements of the Contract Documents. After these demonstration tests are satisfactorily completed, but prior to the Final Review, submit a written certification that: 1) attests to the Contract Document compliance for this project; and 2) certifies that the equipment and materials

05/03/13 PERMIT SET

installed in this project contain no lead, asbestos or PCB. Prior to the final review, the Contractor shall confirm the following items regarding the status of key elements of the work. Negative responses to any of the items indicate that the construction is not substantially complete, and the building is not ready for a final review. The Contractor shall confirm the following in writing:

1. Building fire protection systems are completely installed, commissioned, operating, and connected to the city, public or private utilities and pressure tested.
2. Building has normal electrical power.
3. The emergency or stand-by power system has been started up, commissioned, and is standing by.
4. Building systems have been cleaned.
5. Seismic restraints have been inspected as specified. Any required special inspections have been completed.
6. Building fire and life safety systems have been tested and accepted by the local authorities. Any required special inspections have been completed.
7. All final wiring connections have been rechecked.
8. All base building lighting systems are completely installed and operating.
9. There are no deviations or non-compliance with the Contract Documents; otherwise, provide a detailed account of any and all deviations or non-compliance.
10. All items on field review reports have been responded to in writing and are resolved to the satisfaction of the Owner.
11. All outstanding items on submittals and shop drawings have been addressed in writing and are resolved to the satisfaction of the Owner.
12. Schedule the final review only after providing written confirmation of all items above. Provide a minimum of ten (10) days notice.

C. Certificates and Documents required by the Contract shall be presented to the Engineer at least two (2) weeks prior to the Final Review.

D. After the Final Review, any changes or corrections noted as necessary for the work to comply with the Contract Documents shall be accomplished without delay in order to secure final acceptance of the work.

3.21 EARLY OCCUPANCY

A. Be responsible for completing those systems, which are necessary to allow partial occupancy of the building even if systems in the unoccupied areas are incomplete.

B. Verify and comply with requirements for temporary occupancy with the local Building Department.

END OF SECTION

05/03/13 PERMIT SET

SECTION 210548

VIBRATION ISOLATION AND SEISMIC RESTRAINTS FOR FIRE SUPPRESSION

PART 1 - GENERAL

1.1 WORK INCLUDED

A. The work of this Section shall include, but is not limited to, the following:
   1. Seismic restraints for Fire Protection and Fire Suppression equipment and piping
   2. Supervision and inspection of installed seismic restraints, anchorage and associated hardware

1.2 RELATED DOCUMENTS

A. Section 21 05 01 – Fire Protection General Provisions

B. Section 21 13 19 – Fire Protection Systems

1.3 REFERENCE STANDARDS

Published specifications standards, tests or recommended methods of trade, industry or governmental organizations apply to work in this Section where cited below:

A. ASCE – American Society of Civil Engineers
   1. ASCE 7-05, 2006 Revised 2007 – Minimum Design Loads for Buildings and Other Structures

B. CBC – California Building Code: Title 24 Building Standards

C. NFPA – National Fire Protection Association
   1. NFPA 13, Edition 2010 – Standard for the Installation of Sprinkler Systems, with California amendments
   2. NFPA 13HB, Edition 2010 – Automatic Sprinkler Systems Handbook, with California amendments
   3. NFPA 14, Edition 2007 – Standards for the Installation of Standpipe and Hose Systems, with California amendments
   4. CEC, Edition 2010 – California Electrical Code

1.4 QUALITY ASSURANCE

A. Comply with Reference Standards.

1.5 SUBMITTALS

A. Shop Drawings: Concrete reinforcing details and templates for all foundations, bases, supports, hanger bolts, etc.; support frame details, pipe support details; equipment weight, center of gravity and operating speed, location and installation details. Include in the submittal drawing the following information based on equipment submittals released for construction:
   1. Seismic restraint calculations stamped by a California State licensed structural or civil engineer, confirming compliance with ASCE 7-05.
   2. Note compliance with seismic code regulations and the project specification on the submittals.
   3. Number and location of seismic restraints and anchors for each piece of equipment including but not limited to vertical pipe risers, bolt sizing and embedment depth.
   4. Specific details of restraints including anchor bolts for mounting and maximum loading at each location.
   5. Drawings showing methods of suspension, support guides for piping.
   6. Provide installation instructions, drawings and field supervision to assure proper installation and performance.

1.6 MANUFACTURER RESPONSIBILITIES

A. Manufacturer of seismic restraints shall have the following responsibilities:
   1. Determine seismic restraint sizes and required locations.

2. Provide piping and equipment seismic restraints as scheduled or specified.
3. Provide installation instructions, drawings and field supervision to assure proper installation and performance.
4. Seismic restraints shall be designed for the lateral and vertical forces required by the California Building Code for the specific project type and site. Confirm lateral and vertical forces and site-specific design criteria with the project Structural Engineer.

1.7 DEFINITIONS

A. Life Safety Systems:
1. All components involved with fire protection including sprinkler and standpipe piping, fire pumps, jockey pumps, fire pumps control panels, service water supply piping, water storage tanks, fire smoke dampers, emergency pressurization systems, smoke exhaust systems, etc. Life safety system restraints shall be designed with an Importance Factor of 1.5.

B. Positive Attachment:
1. A positive attachment is defined as a cast-in anchor, a drill-in wedge anchor, a double-sided beam clamp loaded perpendicular to a beam, or a welded or bolted connection to structure. Single sided “C” type beam clamps for support rods of overhead fire protection piping or any other equipment are not acceptable as seismic anchor points.

PART 2 - PRODUCTS

2.1 ACCEPTABLE MANUFACTURERS

A. Piping Seismic Bracing: Kin-Line, Super Strut, Mason Industries

B. Equipment Seismic Bracing: Mason Industries (MII), Vibration Mountings & Control (VMC), Amber-Booth (AB), Vibration Eliminator (VEC), Vibrex Vibration Control Systems (VVC)

2.2 SEISMIC RESTRAINTS

A. General:
1. Provide restraints capable of safely accepting forces defined by the project Structural Engineer, without failure, to maintain equipment and piping in a captive position. Restraints must not transmit objectionable vibration or noise. Submit calculations by a structural or civil engineer licensed and registered in the State of the California to verify seismic restraint and cable capacities. Provide products with current OSHPD certification OPA numbers, provide calculations demonstrating compliance with regulatory requirements.
   a. Seismic Restraint, Type I: All directional seismic snubbers shall consist of interlocking steel members restrained by molded neoprene bushing compounded to bridge bearing specifications. Bushing shall be replaceable and a minimum of 1/4-inch thick. Rated loadings shall not exceed 1000 psi. Snubbers shall be manufactured with an air gap between hard and resilient material of not less than 1/8 inch or more than 1/4 inch. Snubbers shall be installed with factory set clearances. The capacity of the seismic snubber at 3/8-inch deflection shall be equal or greater than the load assigned to the mounting grouping controlled by the snubber multiplied by the applicable “G” force. Submittals shall include the load deflection curves up to 1/2-inch deflection in the X-, Y- and Z-planes. Snubbers shall have an anchorage pre-approval “OPA” number from OSHPD in the State of California verifying the maximum certified horizontal and vertical load ratings.
   Type Z-1225-1..... MII
   b. Seismic Restraint, Type III: Seismic solid braces shall consist of steel angles or channels to resist seismic loads with a minimum safety factor of 2 and arranged to provide all directional restraint. Seismic solid brace end connectors shall be steel assemblies that swivel to the final installation angle and utilize two through bolts to provide proper attachment. Seismic solid brace assembly shall have anchorage pre-approval number from OSHPD in the State of California verifying the maximum certified load ratings.
   Type SSBS..... MII

PART 3 - EXECUTION

3.1 GENERAL

A. Install in accordance with manufacturer's recommendations and written instructions.

3.2 SEISMIC RESTRAINTS

A. General:
   1. Where solid brace restraints are located, the equipment or piping support rods shall be angle braced for compression loads.
   2. At all locations where solid brace restraints are attached to pipe clevises, the clevis cross bolt shall be reinforced with cross braces.
   3. Provide drill-in concrete anchors for ceiling and wall installation and female wedge type for floor-mounted equipment.

B. Seismic Restraint of Piping:
   1. Fire protection piping shall be braced in accordance with California Building Code, ASCE 7-05, and NFPA 13 and 14.

C. Seismic Restraint of Equipment:
   1. All fire protection equipment is considered life safety equipment and shall be seismically restrained using the seismic force levels for life safety equipment.

END OF SECTION

SECTION 210550

ACCESS DOORS IN GENERAL CONSTRUCTION FOR FIRE PROTECTION

PART 1 - GENERAL

1.1 WORK INCLUDED

A. The work of this Section shall include, but is not limited to, the following:
   1. Furnishing access doors for installation in general construction and color-coded identification dots.

1.2 RELATED DOCUMENTS

A. Section 21 05 01 – Fire Protection General Provisions

B. Section 21 05 53 – Systems Identification for Fire Protection

1.3 REFERENCE STANDARDS

A. ASME – American Society of Mechanical Engineers
   1. ASME A13.1 – 2007: Scheme for the Identification of Piping Systems

B. ASTM – American Society for Testing and Materials
   1. ASTM A 167: Standard Specification for Stainless and Heat-Resisting Chromium-Nickel Steel Plate, Sheet and Strip
   2. ASTM A 1008: Standard Specification for Steel, Sheet, Cold-Rolled, Carbon, Structural, High-Strength Low-Alloy

C. NAAMM – National Association of Architectural Metal Manufacturers
   1. AMP 500-06 – Metal Finishes Manual for Architectural and Metal Products

D. UL – Underwriters Laboratories Inc.
   1. UL Fire Resistance – 2009: Fire Resistance Directory set

1.4 QUALITY ASSURANCE

A. Single-Source Responsibility: Obtain doors for the entire project from a single manufacturer.

B. Fire-Resistive Rating: Wherever access doors are required in construction where a fire-resistive classification is indicated, on the Architectural documents, provide access door assembly with panel door, frame, hinge and latch from manufacturer listed in Underwriters Laboratories Inc.'s "Building Materials Directory" for required rating.
   1. Provide UL Label on each fire-rated access door.

C. Furnish inserts and anchoring devices that must be built into other work for installation of access doors.

1.5 SUBMITTALS

A. Shop Drawings: Submit access door locations superimposed on the fire protection piping layout shop drawings. Submit manufacturer's data on access doors including size and type.

PART 2 - PRODUCTS

2.1 ACCEPTABLE MANUFACTURERS

A. Access Doors: Milcor Inc., Karp Associates, Inc., J.L. Industries, Acudor, Williams Brothers

B. Color-Coded Identification Buttons: Brady/Seton, Stranco

2.2 ACCESS DOOR CONSTRUCTION

A. Provide recessed type as required to accept matching ceiling tile or drywall, etc.

B. Provide UL-rated doors for fire-rated construction.

C. Provide flush type steel framed panel with concealed continuous piano hinges for masonry or concrete construction. Provide textured frame for drywall construction.

D. Provide cam type locking device. Provide cylinder lock type access doors located in public corridors and washrooms complete with master keys.

E. Provide insulated doors in insulated or acoustically rated construction.

F. Furnish access doors of proper size for access to concealed equipment. Unless otherwise indicated, minimum size to be 12-inch by 12-inch for hand access and minimum 18-inch by 18-inch for valve and actuator access and 24-inch by 24-inch for equipment access. The following schedule is based on Karp Associates Inc.:
   1. Rated Construction: Fire-rated access door UL “B” Label Model KRP
   2. Non-Rated Dry Wall Construction: Model KDW
   3. Non-Rated Masonry, Concrete: Model DSC 214-M
   4. Non-Rated Ceramic Tile, Stainless Steel, Satin Finish: Model DSC 214-M
   5. Non-Rated Plaster Wall: Model DSC 214-PL
   6. Non-Rated Plaster Ceilings: Model DSC 210-PL

G. Provide color-coded dots on access doors and accessible ceiling tiles to indicate type of service.

PART 3 - EXECUTION

3.1 GENERAL

A. Coordinate location of access doors in hung ceilings, furred spaces, walls, etc., to provide access to concealed work items requiring maintenance and/or adjustment. Obtain approval of the Engineer for the locations of such access doors.

B. Locate and group equipment requiring access doors. Coordinate location of equipment with other trades to minimize number of access doors in one area.

C. Provide access doors for maintenance or adjustment purposes for fire protection system components, including but not limited to the following:
   1. Valves
   2. Flow switches
   3. Concealed equipment

D. Access doors shall be marked by small color markings at corner of tile or door in accordance with the following color assignments:
   1. Fire Protection – Red

END OF SECTION

SECTION 210553

SYSTEMS IDENTIFICATION FOR FIRE PROTECTION

PART 1 - GENERAL

1.1 WORK INCLUDED

A. The work of this Section shall include, but is not limited to, the following:
   1. Valves, automatic control valves, dampers (including smoke and combination fire/smoke dampers) and automatic control dampers identification
   2. Equipment identification
   3. Piping identification
   4. Signage

1.2 RELATED DOCUMENTS

A. Section 21 05 01 – Fire Protection General Provisions

B. Section 21 05 50 – Access Doors in General Construction for Fire Protection

1.3 REFERENCE STANDARDS

A. ASME – American Society of Mechanical Engineers
   1. ASME A13.1 – 2007: Scheme for the Identification of Piping Systems

1.4 QUALITY ASSURANCE

A. Piping identification shall comply with ASME Standard A13.1.

1.5 SUBMITTALS

A. Submit the following:
   1. Valve identification chart
   2. Automatic control valve identification chart (obtain from the Building Management System contractor for inclusion with this submittal)
   3. Damper identification chart (including smoke and combination fire/smoke dampers)
   4. Automatic control damper identification chart (obtain chart from the Building Management System contractor for inclusion with this submittal)
   5. Lists of pipe and equipment to be labeled
   6. Color chart

B. Product Data: Manufacturer's latest published data for materials, equipment and installation, including samples of valve tags, equipment identification and piping identification.

C. Maintenance Manuals: Provide valve tag schedules for inclusion in maintenance manuals.

PART 2 - PRODUCTS

2.1 ACCEPTABLE MANUFACTURERS

A. Brady/Seton

B. Stranco

C. Kolbi

2.2 VALVE IDENTIFICATION

A. All tagged components shall be in accordance with ASME A13.1.

B. For valves, use metal tags 2-inch minimum diameter, fabricated of 19-gauge polished brass, stainless steel or aluminum.
   1. Attach tags with jack chain "S"-hook or split ring of same materials.
   2. Provide engraved/stamped tags with black ink-filled 1/4-inch high letters and 1/2-inch high numbers.
   3. Provide 5/32-inch hole for fastener.

05/03/13 PERMIT SET

2.3 PIPE IDENTIFICATION

A. Pipe markers shall have 1.25-inch high letters and integral directional flow arrows. Smaller letters may be used only when space does not permit 1.25-inch high lettering.

B. For piping up to 5-inch diameter, use pre-formed snap-on markers. For piping 6-inch diameter and up, use pre-formed strap-on markers with nylon straps.

C. Material: Semi-rigid colored vinyl; 15 gauge up to 1-inch pipe, 30 gauge for all other pipe sizes.

D. Seton “Setmark” or equal.

E. Pressure-sensitive tapes are unacceptable.

2.4 EQUIPMENT IDENTIFICATION

A. Fire Protection equipment shall be identified by means of nameplates permanently screw-fastened to the equipment. Nameplates shall be black surface, white core laminated bakelite with engraved letters. Plates shall be a minimum of 3-inch long by 1-inch wide with white letters 3/8-inch high.

2.5 SIGNAGE

A. Provide engraving stock melamine plastic laminate, complying with FS L-P-387, in sizes and thicknesses indicated, engraved with engraver's standard letter style of sizes and wording indicated, black with white core (letter color) except as otherwise indicated, punched for fastening except where adhesive mounting is necessary because of substrate.
   1. Thickness: 1/16-inch for signs up to 20 square inches or 8-inch length; 1/8-inch for larger signs.
   2. Fasteners: Self-tapping stainless steel screws, except contact type permanent adhesive where screws cannot or should not penetrate substrate.

PART 3 - EXECUTION

3.1 VALVE IDENTIFICATION

A. Provide schedules of all valves showing identification number, size, type and service of each valve. Provide separate list for each separate type of system. Incorporate in maintenance manuals.

3.2 EQUIPMENT IDENTIFICATION

A. Identify equipment with identical letter and/or number as used on the Drawings. Where space is available, use full name of equipment. Attach nameplates in a permanent manner in a location that will be clearly visible after installation is complete.

3.3 PIPING IDENTIFICATION

A. Piping identification shall be in conformance with the ASME A13.1.

B. Identify piping systems with color-coded bands, sharply contrasting with background. Locate bands near strategic points, such as valves, items of equipment, changes in direction, wall penetrations, capped stub-out for future connection and every 40 feet of straight runs. If necessary, paint a strip background of black or white to obtain contrast.

C. Apply bands where they can be easily read. Provide bands with backgrounds of different colors.

3.4 ACCESS IDENTIFICATION

A. Identify service, piping and equipment behind all architectural access doors.

B. Removable ceiling tile shall be marked by small color markings at corner of tile or door in accordance with the following color assignment:
   1. Fire Protection – Red

3.5 INSTALLATION OF IDENTIFICATION

A. Where identification is to be applied to surfaces which require insulation, painting or other covering or finish, including valve tags in finished spaces, install identification after completion of covering

and painting. Install identification prior to installation of acoustical ceilings and similar removable concealment.

END OF SECTION

05/03/13 PERMIT SET

SECTION 211319

FIRE PROTECTION SYSTEMS

PART 1 - GENERAL

1.1 DESCRIPTION

A. Under this Division, the Contractor shall furnish all labor, equipment, appliances, and materials to perform all operations in connection with the installation of a complete and tested fire protection system as described in the Contract Documents.

1.2 RELATED DOCUMENTS

A. Section 21 05 01: Fire Protection General Provisions

B. Section 21 05 48: Vibration Isolation and Seismic Restraints

C. Section 21 05 50: Access Doors in General Construction

1.3 SYSTEM DESCRIPTION

A. Applicable Standards:

1. All Fire Protection design, products, and installation shall comply with the applicable provisions and recommendations of the following jurisdictional codes, authorities and guidelines:
   a. California Building Code, 2010
   b. California Fire Code, 2010
   c. California Code of Regulations, Title 19
   d. National Fire Protection Association Standard 14, 2007 edition with California amendments
   e. National Fire Protection Association Standard 20, 2007 edition
   f. National Fire Protection Association Standard 21, 2010 edition with California amendments
   g. National Fire Protection Association Standard 25
   h. National Fire Protection Association Standard 72, 2010 edition with California amendments
   i. NFPA Standards Edition dates as adopted by State Fire Marshal
   j. State Codes, Code Amendments and Requirements
   k. California State Fire Marshal Requirements
2. Provide fire protection products including valves, fittings and couplings, supports, anchors, fire stops, sprinklers, fire hose stations, hose valves, etc., that are Underwriters Laboratories listed, and approved by the State Fire Marshal.
3. Fire Protection and Smoke Control design, products, and installation shall comply with the applicable provisions and recommendations of the authorities .

B. Design Parameters:

1. Scope of Fire Protection:
   a. The Fire Protection Drawings issued as part of the Contract Documents indicate the following in diagrammatic manner: location of water services, check valves, shutoff valves, fire standpipe risers, fire sprinkler areas, alarm zoning, and special conditions. As such, these Drawings are an interpretation of the project requirements and are to be used as a guide in the layout and design of the complete fire protection system for the entire building floor area; however, it does not relieve the Contractor from providing all work and equipment necessary to provide a complete and operational system, according to the project requirements and applicable standards.
   b. All equipment and devices shall be Underwriters Laboratories listed, and State Fire Marshal approved. Fire Protection Contractor shall sign and seal shop Drawings prior to issuance to Building Department and State Fire Marshal for approval. No work shall be installed without approved shop Drawings.

05/03/13 PERMIT SET

c. It shall be the responsibility of the Contractor to coordinate the location of all sprinkler heads with final reflected ceiling Drawings.
d. Fire sprinkler mains shall not interfere with the HVAC contractor's ability to place HVAC main ducts tight to bottom of fire proofed structural elements.
e. The Contractor shall provide all offsets, drains and drain plugs for trapped piping, and drainage piping. The Contractor shall notify the Engineer, in writing, of all discrepancies in sprinkler head locations where local codes are violated; i.e., allowable distance from walls or exterior glass, small room spacing, stairs, etc.
f. System piping shall be hydraulically designed throughout all areas in accordance with the rules and regulations of the applicable standards using the design densities indicated herein:
    1) Fire Sprinklers: The fire sprinkler hydraulic calculations shall include hose allowances as defined for the hazard for inside and outside hose streams as required to meet applicable standards.
    2) Hydraulically designed sprinkler systems should be designed for a supply pressure of at least 10 percent, but not less than 10 psi, below the supply curve.
    3) The velocity of water through the fire protection piping system shall not exceed maximum allowable velocities allowed by applicable standards.
    4) Standpipes: Pipe sizes based upon providing the required flow rate at the most hydraulically remote fire hose valve connection on the standpipe and at the top most hose outlet of each of the other standpipes at a minimum 100 psi residual. The minimum flow rate for the most remote standpipes shall be 500 gpm, and 250 for each additional standpipe, with total not to exceed 1000 gpm for combined systems.
g. The hydraulic calculations shall be based on current flow data obtained from local water authority. Confirm flow data prior to design and layout of fire protection systems.

2. Wet Fire Sprinkler Density Requirements:
    a. All sprinkler systems shall be hydraulically calculated. In the event design criteria information from the project fire insurance underwriter is unavailable at the time of initial design, the following <u>minimum</u> criteria shall be used:
        1) Light Hazard: Offices, data processing, and corridor piping systems shall be sized to deliver a minimum 0.10 gpm/sq. ft. over an area of 3000 sq. ft. at the most remote location and 250 gpm for hose stream. The protection area per sprinkler head shall not exceed 200 square feet.
        2) Ordinary Hazard – Group 1: Parking, mechanical spaces, piping shall be sized to deliver a minimum 0.15 gpm/sq. ft. over 3000 sq. ft. at the most remote location. Sprinkler head spacing shall be limited to maximum area of 130 square feet.
        3) Ordinary Hazard – Group 2: Retail areas, truck dock, storage areas and mechanical rooms, piping shall be sized to deliver a minimum 0.20 gpm/sq. ft. over an area of 3000 sq. ft. at most remote location. Sprinkler head spacing shall be limited to maximum area of 130 square feet.
3. Standpipe Systems:
    a. Wet Class I standpipe systems with 2½-inch hose valves.
    b. Provide with drain risers adjacent to each standpipe equipped with 2½ inch internal threaded swivel fittings having threads as designated by local fire authority.
    c. Provide 2½-inch pressure reducing type hose valve where pressure will exceed 100 pounds per square inch.
4. Zoning of the Fire Protection System:
    a. Wet Sprinkler System: Water flow detection zoning shall be per floor basis with areas not exceeding maximum allowable per NFPA.
5. Elevator Machine Room Requirements:
    a. The sprinkler supply line to each elevator machine room shall be provided with an accessible shutoff valve with supervisory switch.
    b. Fire sprinklers installed in the elevator machine rooms shall be intermediate temperature rating.

C. No pipes or other apparatus shall be installed so as to interfere in any way with the full swing of doors, building access doors, and access doors in ductwork. The arrangement, positions, and connections of pipes, drains, valves, etc., shown on the Drawings shall be taken as a close approximation and while they shall be followed as closely as possible, the right is reserved by the Project Representative to change the locations to accommodate any conditions which may arise during the progress of the work without additional compensation to this Contractor for such changes, provided that the changes are requested prior to the installation of this Contractor's work.

D. Piping typically shall be installed concealed in or above building construction; i.e.; hung ceilings, and shall be so arranged that relocation of lighting fixtures, or plumbing and mechanical systems, will not cause any interference.

E. Coordinate with the fire sprinkler and alarm trades to ensure full awareness of the location of all control valves, flow switches, tamper switches, and alarm and signal switches.

1.4 SUBMITTALS

A. Comply with requirements of:
   1. Division 1
   2. Fire Marshal:
      a. Submit one (1) set of Drawings, one (1) set of catalog cut sheets for all equipment to be installed, and one (1) set of hydraulic and seismic calculations to the Fire Marshal.
      b. Submittals shall include all information required by applicable standards and organized by specification section. Incomplete submittals or submittals not organized by specification section shall be returned without review. The automatic sprinkler devices shall be distinctly discernible, with all extraneous, non-sprinkler information kept to a minimum. "High-lighting" is not acceptable.
   3. Insurance Underwriter Company:
      a. Submit three (3) sets of Drawings, three (3) sets of catalog cut sheets for all equipment to be installed, and three (3) sets hydraulic and seismic calculations.
      b. Include Sprinkler Identification Number (SIN) nomenclature on fire sprinkler product data.
   4. Product Data: Submit manufacturer's product literature including, material specifications and other information required to demonstrate compliance with specified requirements. Submit for engineer's approval an equipment manual which will include all technical data of each essential component of the system such as automatic sprinklers, electrical detectors, control system, etc.

B. Shop Drawings:
   1. Fire Protection Contractor shall sign and seal shop Drawings prior to issuance to local fire authority for approval. No work shall be installed without approved Shop Drawings.
   2. Obtain approval on systems in accordance with construction schedule with fire supply mains, standpipes, etc., submitted first then fire sprinkler head layout, floor by floor as schedule dictates.
   3. Submit fire sprinkler and standpipe system shop Drawings and hydraulic and seismic calculations with submittal of product data.
   4. Submit detailed layout Shop Drawings of complete sprinkler systems. Shop Drawings shall indicate plan locations and elevations of piping and hangers, including bottom elevation of major piping and be coordinated with building conditions, ductwork and other mechanical and electrical services.
   5. Submit detailed layout Shop Drawings of standpipe. Shop Drawings shall indicate plan locations and elevations of piping and hangers, including bottom elevation of major piping and be coordinated with building conditions, ductwork and other mechanical and electrical services.
   6. Include the following in Shop Drawings in addition to requirements of applicable standards. Drawings submitted without these items will be returned unreviewed:
      a. Finished ceiling components such as ceiling grid, and lights.
      b. Beams and other sprinkler obstructions in unfinished spaces.

c. Details and sections to clarify design and installation to be in conformance with design criteria and standards described in this section.
d. Locations and sizes of beam penetrations, approved by the structural engineer.
e. Locations of all seismic bracing line restraints and additional bracing required for flexible type couplings.

C. Written statement that coordination has been accomplished with work of other contractors and installers.

1.5 QUALITY CONTROL

A. All welders shall be certified by ANSI B31.1.0-1967—"Standard Qualification Welding Procedures, Welders and Welding Operators." Furnish welder performance qualification test certificates for positions 2G and 5G made in strict compliance with the above codes. Welders shall be certified for the type of pipe materials specified herein. All costs incident to procedures and welder's qualification tests shall be assumed by this Contractor. Two (2) copies of the qualification test report and certification with welder's identification number, letter, etc., shall be delivered to the Project Representative for his file before any welding commences. Each weld shall bear the welder's identification mark permanently indented in the weld. Welding procedures shall also be in accordance with the requirements of the American Welding Society, current edition where applicable.

B. Only Subcontractors and workmen experienced and regularly engaged in the installation of automatic sprinkler type fire protection systems for the past five (5) years and licensed as required by the Authority having jurisdiction shall be permitted to install the system.

PART 2 - PRODUCTS

2.1 ACCEPTABLE MANUFACTURERS

A. Following is a list of manufacturers whose products may be submitted for review. All items submitted as being equal to that specified, shall have same quality, finish, material construction, etc., as those specified under base Specification.

B. Acceptable Manufacturers:
1. Valves: Jenkins, Kennedy, Walworth, Crane, CLA-Val, Nibco, Milwaukee, Victaulic
2. Fire Hose Valves: Wilkins, Croker, Potter Roemer, Standard Fire West, Elkart
3. Sprinkler Heads: Viking, Grinnell, Central, Reliable
4. Waterflow Switches: Potter Electric Co., Potter Roemer, Notifier.

2.2 PIPING AND FITTING MATERIALS

A. General Characteristics for Threaded Pipe and Fittings: Field Pipe Threading: Comply with ASME B1.20.1 "Pipe Threads, General Purpose (inch)".

B. General Characteristics for Welded Pipe and Fittings: Welding: Shop Welded and in compliance with AWS B2.1 "Specifications for Qualifications of Welding Procedures and Welders for Piping and Tubing".

C. Buried Fire Main: Cement-Lined Mechanical Joint Ductile Iron Pipe: ANSI/AWWA C151/A21.51, C150/A21.50, C111/A21.11, Class 52, 53, or 54.
1. Interior of Pipe: Cement-lined and seal coated, ANSI/AWWA C104/21.4 and listed by approved certifying agency as conforming to requirements of ANSI/NSF 61.
2. Outside of Pipe: Asphaltic Coated, ANSI/AWWA C153/A21.53.

D. Automatic Fire Sprinkler Systems:
1. Above Grade Piping Systems Pipe Sizes 2 inch and Smaller: Piping: ASTM A135, or A53 B, schedule 40 carbon steel pipe.
2. Above Grade Piping Systems Pipe Sizes 2½ inches and Larger: Piping: ASTM A135 or A53 B, schedule 10 carbon steel pipe.
3. Dry Sprinkler and Standpipe Pipe and Fittings: Provide Hot dipped zinc coating inside and outside the piping in accordance with ASTM A-123 for all piping materials. Fittings are not required to be galvanized.

4. Fittings:
   a. Pipe Sizes 2 inch and Smaller:
      1) Class 125 cast iron threaded fittings for working pressures under 175 pounds per square inch, conforming to ANSI B16.4.
      2) Class 150 malleable iron threaded fittings for working pressures under 300 pounds per square inch, conforming to ANSI B16.3.
      3) Class 250 cast iron threaded fittings for working pressures up to 400 pounds per square inch, ANSI B16.4
      4) Class 300 malleable iron threaded fittings for working pressures greater than 175 pounds per square inch up to 800 pounds per square inch, conforming to ANSI B16.3.
   b. Pipe Sizes 2-½ inch and Larger: ASTM B16.9, B16.25 welded fittings, cast iron flanges, and vee-butt welded joints.
   c. Pipe Sizes 1½ inch and Larger:
      1) Various Victaulic "Firelock" fittings/couplings may be acceptable, however mechanical T-fittings 920, 921, Hooker fittings, etc. will not be permitted. Contractor to submit list of fittings he intends to use and in which systems.
5. Grooveless clamp or saddle fittings are not acceptable.

E. Standpipe Fittings:
   1. Threaded, cast iron ANSI B16.4, 250 pounds per square inch class.
   2. Threaded, cast iron flanges and flanged fittings, ANSI B16.1, 250 pounds per square inch class.

2.3 VALVES

A. All fire protection valves shall be Underwriters Laboratories label, Factory Mutual approved and to be rated of minimum 175 psi working pressure rating or where line pressure exceeds 175 psi, extra heavy. Shut off valves shall be of the indicating type. Where pressure exceeds 175 pounds per square inch, extra heavy rated valves shall be provided.

B. Floor Control, Riser and Isolation valves:
   1. 175 psig Working Pressure:
      a. Gate Valves:
         1) Gate valves up to and including 2 inch Kennedy Figure 66, 175 psig cold water, UL listed, bronze body, bronze trim, single disc, outside screw and yoke, screwed bonnet valves with seats of bronze, threaded ends.
         2) Gate valves 2½ inch through 12 inch Kennedy Figure 4068, 175 psig cold water, UL listed, and approved iron body, outside screw and yoke bolted bonnet valves with double or single disc, Class 125 ANSI B16.1 flanged ends, bronze trim, bronze seats.
      b. Butterfly Valves:
         1) 2-½ inch through 8 inch UL listed for specification 1091, under Approval Standard 1112, ductile iron body conforming to ASTM A-536 coated with polyphenylene sulfide blend, ductile iron disc conforming to ASTM A-536 with EPDM coating providing bubble tight shut-off, approved weatherproof manual actuator suitable for indoor or outdoor use with two single pole, double throw supervisory switches either pre-wired (WRD) or unwired (UWD) monitoring the open position as required to meet design requirements, grooved ends for installation with grooved mechanical couplings and rated for service up to 175 psi (1200 kPa) working pressure, equivalent to Victaulic Series 708-W, Gruvlok 7722-3 FD, or Nibco GD4765-4N.
         2) UL listed, slow-open quarter turn valve with built in tamper switches, 175 psi, threaded ends. Valve shall be provided with tamper switches rated for 0.5 Amps, 28 VDC; equivalent to "No. BB-SCS02" by Milwaukee Valve.

C. Check Valves:
   1. 175 psig Working Pressure:
      a. Check Valve – 2-1/2 inch and larger: Iron body, swing check, 175 psi working pressure, bronze mounted, flanged pattern, UL listed; equivalent to “Fig. F-908-W” by Nibco.
      b. Check Valve – 4 inch and larger: Iron body, swing check, 175 psi working pressure, bronze mounted, flanged pattern, UL listed; equivalent to “Fig. F-908-W” by Nibco.

D. Spring Loaded Check Valve – 4 inch to 8 inch Line Sizes: Dual disc, spring loaded, check valves, UL listed for a single check and anti-water hammer service and for horizontal or vertical installation, supplied drilled, tapped and plugged at bosses where required, Grade “E” EPDM seal, housing cast of ductile iron conforming to ASTM A-536 or malleable iron to ASTM A-47 with grooved ends for installation with Victaulic grooved end couplings rated for service up to 250 psi working pressure; equivalent to “Series 714 and 710 Vic-Check” by Victaulic.

E. Pilot Operated Pressure Regulating Valve:
   1. Size to operate within 20 percent to 80 percent of its maximum flow rate capacity at sprinkler demand.
   2. Horizontal Globe Valve, 300 lb. Class, flanged or threaded, 300 ANSI B16.24 (Bronze) UL, 300 ANSI B16.42 (Ductile Iron) ULC:
      a. Inlet Pressure 300 psi maximum.
      b. Pressure Differential 10 psi minimum.
      c. Pressure Adjustment Range: 30 - 165 psi.
      d. Temperature Range: Water to 180 degrees F maximum.
   3. Materials:
      a. Main valve body & cover: Epoxy Coated Cast Steel ASTM A216-WCB UL, ULC Bronze ASTM B62 UL, ULC.
      b. Main valve internal trim: Bronze ASTM B61 Pilot control system.
      c. Pilot control valve: Bronze ASTM B62 with Stainless Steel 303 internal trim.
      d. Pilot tubing: Copper tubing with brass fittings.
   4. Product: Model "90G-21" by CLA VAL, with materials listed, (No Known Equal)

F. Pressure Relief Valve:
   1. UL Listed Pressure Relief Valve is a direct-acting, spring loaded, diaphragm type relief valve capable of being installed in any position and will open and close within very close pressure limits.
   2. Inlet pressure rated for 400 PSI.
   3. Pressure adjustment screw to vary the spring load on the diaphragm. Pressure range of 20 to 200 psi. To prevent tampering, the adjustment cap, provide wire seal through lock wire holes provided in the cap and cover,
   4. Product: Model “55L” by CLA VAL, with material listed, (No Known Equal)

G. Double Check Valve Assembly:
   1. Double check valve assembly installed in the incoming water service line shall be approved by the local water authority and the Environmental Protection Agency as required for the application.
   2. Double check valve assembly shall be suitable for a working pressure of 150 psig. The pressure loss through the entire assembly shall not exceed 10 psig at the design flow rate. The size of the assembly shall not be less than the line in which it is installed.
   3. Assembly shall be complete with inlet and outlet OS&Y shut-off valves.
   4. Double check valve assembly shall be UL listed, for the application in a fire protection piping system.
   5. If it complies with these specifications, double check valve assembly manufactured by Conbraco, Hersey, Watts Regulator Company, or Zurn/Wilkins will be acceptable.

H. Fire Hose Valve:
   1. Fire Hose Valve:
      a. Line pressure under 175 psi:
         1) 2½ inch angle rough brass hose valve, with cap and chain with 1/8 inch hole drilled in cap to relieve pressure; equivalent to "#V6L Fire Hose Valve" by Standard Fire West.
         2) 2½-inch angle hose valves x 2½-inch MPT outlet rough brass with cap and chain by Potter Roemer.
      b. Line pressure over 175 psi: 2½ inch angle rough brass hose valve, with cap and chain with 1/8 inch hole drilled in cap to relieve pressure; equivalent to "PRESSURE-TRU #Z 3000" by Wilkins.

I. Automatic Ball Drip: Installed at boss location "C" on the check valve of the fire department connection, closing against pressure, but opening when pressure is off allowing water to drain from the fire department connection, "1/2 inch Ball Drip Model A "by Automatic Sprinkler or Kiddie.

2.4 FLEXIBLE JOINTS

A. Buried Flexible Expansion Joints:
   1. Flexible expansion joints shall be installed in the locations indicated on the drawings and shall be manufactured of ductile iron conforming to the material properties of ANSI/AWWA C153/A21.53.
   2. Provide double ball joint design with each flexible expansion joint shall be pressure tested against its own restraint to a minimum of 350 psi (250 psi for flexible expansion joints 30 inches and larger).
   3. Each flexible expansion joint shall consist of an expansion joint designed and cast as an integral part of a ball and socket type flexible joint, having a minimum per ball deflection of: 20 degrees, 3 inches-expansion and total expansion range of not less than 6 inches.
   4. All internal surfaces parts shall be lined with a minimum of 15 mils of fusion bonded epoxy conforming to the applicable requirements of ANSI/AWWA C213 and shall be holiday tested with a 1500 volt spark test conforming to said specification. All external surfaces shall be coated with a catalyzed coal tar epoxy conforming to the material requirements of AWWA C210.
   5. Install with polyethylene wrap over all joints.
   6. Provide restrained mechanical joint or flange ends as required to mate rigidly to piping at both ends. Consult with factory authorized manufacturer representative for guidelines for installations and pipe connection and support accessories required for complete and effective installation.
   7. Provide thrust restraint devices to complete installation including thrust restraint products to adequately transfer loading to expansion joint.
   8. Product: "Double ball configuration FLEX-TEND" as manufactured by EBAA Iron, Inc. or equal (No known equal).

B. Above Ground Flexible Joint: UL listed, expansion joint capable of movement of 6 inches, including seismic, thermal growth and building settlement in all directions; "Fire loop" by Metroflex or equal

2.5 FIRE DEPARTMENT CONNECTION

A. Fire department connections shall be four-way, brushed stainless steel finish with plugs and chains, outlet size and orientation as required.

B. Signage shall be raised or engraved letters at least 1" in height.

2.6 VALVES SUPERVISORY SWITCH

A. Provide UL listed, supervisory switches with two single pole, double throw micro switches on all valves with alarm signal to register on fire alarm panel on all control valves. PIV switches shall be weather-resistant and shall monitor target position. Acceptable Manufacturers: Potter Electric Signal or approved equal.
   1. Valve Supervisory Switches: 2 sets of single pole double throw Form C synchronized sets of contacts rated at 15A, 125/250 VAC and 2.5 A, 0-30 VDC, located within tamper resistant NEMA 6P enclosure with electrical. Plug type switches will not be acceptable.
      a. OS&Y Gate Valve Supervisory Switch: "Model OSYSU-2" by Potter Electric Signal Manufacturing. OS&Y switches shall monitor stem movement and shall be complete with mounting J-bolts.
      b. Butterfly: "Model PCVS-2T" by Potter Electric Signal Manufacturing or equal.

B. Plug and loop type tamper switches shall not be used.

C. All wiring shall be provided under Division 26.

2.7 SPRINKLER HEADS

A. General:
   1. Fire sprinklers shall be of one manufacturer throughout building. No mixing of sprinkler brands shall be permitted.
   2. Sprinklers shall be of all brass frame construction with a coated metal-to-metal seating mechanism.
   3. Sprinklers utilizing non-metal parts in the sealing portion of the sprinkler are strictly prohibited, including O-Rings.
   4. Sprinklers shall have a quick response frangible bulb type fusible element with a temperature rating of 155 or 200 degrees F or shall have a fast response metal type fusible element with a temperature rating of 165 to 212 degrees F.
   5. Sprinklers to be installed in areas with no ceilings shall be of a brass finish and shall be of adequate temperature for the hazard.
   6. Exposed sprinklers subject to corrosive atmospheres shall have a factory applied corrosion resistant coating.
   7. Provide approved sprinkler head wire guards for sprinkler heads located 7 feet 6 inches or lower above finished floor level.
   8. Provide sprinkler heads with minimum ½ inch discharge orifice.
   9. Provide institutional type sprinklers in the holding cells.

B. Ceiling Spaces:
   1. For Exposed/Unfinished ceiling areas, Parking Garage, Mechanical rooms etc. use sprinkler heads similar to Viking, EC/QREC Ordinary Hazard Upright and Pendent Sprinklers model VK570 upright and VK572 pendent both to have brass finish with sprinkler guards
   2. For Finished Ceiling Areas with Gypsum Board Ceilings, Acoustical Ceiling Tiles and Specialty Ceiling System (SCS-01) use sprinkler head equivalent to Viking, Mirage Quick Response Concealed Pendent model #VK464, "Painted White" finish.
   3. For Wood slat ceiling areas use sprinkler head similar to Viking, Standard/Quick Response Extended Coverage Light Hazard ELO Pendant Sprinkler model #VK608, Brass finish with custom sheet metal heat collector 18" square painted "Black".
   4. For Cement Plaster soffits use sprinkler heads similar to Viking, Standard/Quick Response Extended Coverage Light Hazard ELO Pendant Sprinkler model #VK608, "Brushed Chrome" finish with semi-recessed escutcheon model E-1.

2.8 WATERFLOW DETECTORS

A. Flow Switches: Vane type, UL listed, water flow detectors in the sprinkler systems where shown on the Drawings or as indicated in these Specifications. Detectors shall be designed for mounting in the horizontal or vertical piping, but shall not be mounted in a fitting or within 12 inches of any fitting that changes direction of water flow, and shall have sensitivity setting to signal any flow of water that equals or exceeds the discharge from one sprinkler head. Switches shall be activated

by a vane extending into the waterway of the piping. Detectors shall provide a ½ inch conduit entrance.

1. Required whole sizes shall be 1-5/16 inches for piping 2 inches to 3 inches and 2-1/16 inches for piping 4 through 8-inch size.
2. Flow Switch: UL listed, rated for 450 psi and surges up to 18 FPS, alarm activation at 10 gpm, sets of single pole double throw Form C synchronized sets of contacts rated at 15 A, 125 VAC and 2A, 24 VDC; corrosion-resistant using factory-installed, non-corrosive insert.
   a. Switch Enclosure: Tamper resistant, meeting NFPA 4 rating, and equipped with instantly recycling adjustable retard with 0-90 second range.
   b. Equivalent to "Model VSR-F" by Potter Electric Signal Manufacturing.

B. Pressure Switches: UL listed, rated for 250 psi and detect 10 psi pressure increase or decrease from normal line pressure, adjustable from 10 to 175 psi, 2 sets of single pole double throw Form C synchronized sets of contacts rated at 15 A, 125 VAC and 2A, 24 VDC; corrosion-resistant using factory-installed, non-corrosive insert, bleed valve assembly; equivalent to "Model PS40-2A-BVL" by Potter Electric Signal Manufacturing.

C. All electrical wiring shall be provided under another Division of the Specifications.

D. Coordinate all requirements with Division 26.

2.9 DRAINS AND TEST PIPES

A. Fire Sprinkler Zone Valve Assembly:

1. UL Listed Provide drains at locations indicated or required for complete drainage of systems. Provide other drains, valves or plugs as indicated or required. Pipe drains to approved locations.
2. Provide test pipes as indicated or required and piped to discharge at approved locations.

B. Assembly shall be UL Listed, include all required accessories such as flow switch, sight glasses, restrictive orifices test valve and drain angle valves, flow and valve tamper switch meeting the requirements of the applicable NFPA 13 for inspector test stations and fire sprinkler floor zone isolation and drain down, and relief valve where required.

2.10 PIPE SLEEVES

A. The Contractor shall furnish and install all sleeves required for the lines and mains as needed for sprinkler piping.

2.11 PIPE HANGERS

A. Provide in accordance with referenced standards. Do not mix piping material and hanger material of dissimilar metals. All beam clamps shall be fitted with steel retainer straps. Hanger rods of less than 3/8 inch diameter are not permitted. All horizontal piping shall be supported by means of UL approved type hangers with proper size suspension rods and locknuts, spaced as required by the Underwriters.

2.12 SPARE SPRINKLER HEADS

A. In addition to the heads actually required, furnish a stock of extra sprinklers of amounts as recommended by the National Fire Protection Associations Standards, including a minimum of six (6) heads of each type and temperature rating used and two (2) suitable wrenches for each type sprinkler head, contained in steel boxes, suitable for use as a service kit on the project.

B. Pressure Gauge Accessories

1. Gauge Cock: 1/4 N.P.T. brass ball valve with lever handle, equivalent to "LC -14 or LCU-14" by Weiss.

C. Ball Drip Valve: ¾ inch cast brass, straight or angle as required: equivalent to "No. 6781 or 6783" by Croker.

D. Escutcheon Plates: Escutcheon Plates shall be pressed stainless steel, chrome plated with concealed hinges and springs to hold position on pipe. Install on pipes passing through floors, ceiling and walls in finished areas. Wall plates exposed to weather shall be stainless steel. Escutcheon wall plates exposed to weather shall be stainless steel.

E. Sprinkler guards: UL listed, Heavy duty welded wire, red baked enamel finish.

2.13 SOFFITS

A. Level Cover support system: Modular piping cover system for installation of metal piping system in existing construction, ASTM E 84 - Standard Test Method for Surface Burning Characteristics of Building Materials UL Listed, "DecoShield M" manufactured by DecoShield® Systems, Deerfield Beach, Florida.

B. Cover Units: L-shaped and U-shaped cross-section units of flame retardant resin material, paintable finish.

C. Surface burning characteristics when tested in accordance With ASTM E 84:
   1. Flame spread: 20
   2. Smoke developed: 250

D. Provide coupling fittings for joining units end-to-end and prefabricated inside and outside corner fittings and end caps.

E. Provide sidewall sprinkler head housing accommodating NFPA 13 4-inch drop assembly requirements.

F. Provide mounting clips to secure covers to wall-ceiling.

G. Pipe Hangers for Copper and Steel Piping: Design and dimensions compatible with cover system; UL Listed.

H. Paint: Acrylic latex; color to match adjoining surfaces.

PART 3 - EXECUTION

3.1 INSTALLATION

A. All piping, valves, and other materials shall be installed according to the Local Authority rules and an inspection certificate furnished.

B. Sprinkler piping shall be installed and coordinated with the ductwork and other mechanical and electrical services in the ceiling cavities by the Contractor to provide the clearances for lighting fixtures as indicated on the Drawings. If any departures from the Drawings are necessary to comply with any NFPA requirements, or the authority having jurisdiction, such revisions and/or departures shall be detailed and submitted for approval. All such revisions shall be made and the sprinkler systems installed in accordance therewith, without additional cost to the Owner. Departures shall not be made without prior written approval by the Project Representative. The Drawings are schematic and do not indicate inferred details. This installation shall also meet the approval of the Local Fire Department.

C. The sprinkler heads in public areas, and in typical floor elevator lobbies shall be located as indicated on the Architectural reflected ceiling plans and coordinated with the lighting fixtures. Sprinkler head alignment is required in all areas. Sprinklers shall be provided with a temporary plastic cover when installed in plaster or drywall ceilings.

D. No pipes or other apparatus shall be installed so as to interfere in any way with the full swing of doors, building access doors, and access doors in ductwork. The arrangement, positions, and connections of pipes, drains, valves, etc., shown on the Drawings shall be taken as a close approximation and while they shall be followed as closely as possible.

E. The right is reserved by the Project Representative to change the locations to accommodate a change of conditions, which may arise during the progress of the work without additional compensation to this Contractor for such changes, provided that the changes are requested prior to the installation of this Contractor's work.

F. Piping typically shall be installed concealed in or above building construction; i.e.; hung ceilings, and shall be so arranged that relocation of lighting fixtures, or plumbing and mechanical systems, will not cause any interference.

G. All components of the fire protection system shall be in installed in accordance with the manufacturer's installation recommendations.

H. All sprinkler heads shall be installed in conformance with the UL listing criteria. Spacing of sprinkler heads shall be in conformance with the UL listing criteria for the applicable occupancy type.

I. The fire protection subcontractor shall coordinate the installation of pipes, hangers, valves, and all other items of the fire protection system with the work of all other trades so that all components will be installed to avoid conflicts, and provide for proper servicing and maintenance of mechanical and electrical equipment in ceiling plenums.

J. Sprinkler heads shall be installed on a true axis line of ½ inch plus or minus. At the completion of the installation, if any heads are found to exceed this tolerance, heads shall be removed and reinstalled by this Contractor, at no additional cost to the Project Representative.

K. The Project Representative reserves the right to reject any and all work not in accordance with the approved shop drawings

L. Components improperly installed shall be removed and/or relocated as directed by the Project Representative at no additional cost to the Owner. Refer to Section 23 05 01 subsection titled “Contractor's Coordination Drawings” for additional requirements.

M. All sprinkler piping shall be installed concealed in hung ceilings, including drywall ceilings and soffits unless noted otherwise and shall be arranged so that relocation of lighting fixtures shall not cause any interference.

N. Run all pipe straight and true. Springing or forcing piping into place will not be permitted. Install piping in such a manner as to prevent strain on the equipment.

O. Conceal piping in ceiling cavity where ceiling are provided. Exposed piping shall be installed as nearly as possible parallel to or at right angles to the column lines of the building.

P. All piping shall be carefully graded so as to eliminate traps and pockets. Where water traps cannot be avoided, provide drains in conformance with NFPA 13.

Q. Make all joints smooth and unobstructed inside. Ream all cut pipe ends to remove burrs. Remove all obstructions prior to fabrication.

R. Install a union or flanges at equipment connections and elsewhere as indicated.

S. Make welded joints on pipe runs with continuous welds, without backing rings, and with pipe ends beveled before fabrication. Gas cuts shall be true and free from burned metal. Before welding, surfaces shall be thoroughly cleaned. The piping shall be carefully aligned and no metal shall project within the pipe.

T. All threaded pipe throughout the job shall be reamed smooth before being installed. Use full pipe lengths; random lengths joined by couplings will not be accepted.

U. Pipe shall not be split, bent, flattened or otherwise damaged either before or during the installation.

V. All welded elbows shall be long radius type.

W. The Fire Protection Subcontractor utilizing a grooved piping system shall provide a letter of certification to the Project Representative stating that a project site training session of at least two (2) hours duration was conducted for this Project by the grooved fitting manufacturer for the Subcontractor's supervisory and installing personnel.

X. All piping that penetrates fire rated construction shall be firestopped in accordance with Section 3.06.

Y. All piping shall be of the sizes required by applicable codes, but not less than the sizes indicated on the Drawings.

Z. Install sprinkler piping and heads at minimum 24-inch distance from variable air volume box or DDC control.

3.2 FIRE SPRINKLER CONTROL ASSEMBLY

A. Fire Sprinkler Zone Valve Assembly:

1. UL Listed Provide drains at locations indicated or required for complete drainage of systems. Provide other drains, valves or plugs as indicated or required. Pipe drains to approved locations.

2. Provide test pipes as indicated or required and piped to discharge at approved locations.
3. Install control valves, supply valves, in clearly accessible locations within five feet of the floor.
4. Inspector's test valves shall be installed downstream of each water-flow device. Inspector's test outlets shall be piped to drain outside of the building or into the sewer drain. Valves shall be within six feet of the floor or finished grade. When the discharge outlet cannot be seen from the valve or when inspector's test connections are piped into the sewer system, a sight glass shall be provided. Direct interconnections shall not be made between sewers and sprinkler drains.

3.3 SUPERVISORY SWITCHES

A. Provide an integral supervisory switch and control valve on branch lines serving sprinkler protection in elevator spaces and elevator machine rooms.

B. Supervisory switches:
1. Provide valve supervisory switch on each isolation valve indicated below:
   a. Isolation control valves at bases of standpipes.
   b. Valves at backflow protection devices.
   c. Sprinkler-zone valves.
   d. Post indicator valves.
2. Coordinate requirements with Division 26
3. All electrical wiring shall be provided under Division 26.
4. Provide installation in conformance with manufacturer’s installation instructions, including mounting, adjustments to actuating lever and notching of valve stem.
5. The valve supervisory switch must activate within 1/5 length of travel of valve closure or opening. Two separate and distinct signals shall be initiated, one indicating movement of the valve from its normal position and the other indicating restoration of the valve to its normal position. The off-normal signal shall be initiated during the first two revolutions of the hand wheel or during one-fifth of the travel distance of the valve control apparatus from its normal position. The off-normal signal shall not be restored at any valve position except normal.

3.4 VALVES

A. Fire Department Connections:
1. Install fire department connection eighteen inches to twenty-four inches above paving or grade with thirty inch clearance around all sides.

B. Provide full line size check valves with automatic ball drip on the boss located on the bottom and inlet side of each check valve serving fire department connections.

C. Install check valve (other than FDC check valve as above) and water flow indicators with eighteen inch clearance from obstructions so that they can be removed and serviced.

D. Pressure gauges shall be provided at each side of the main check valve and at each control valve for each floor (where applicable).

E. Provide indicating type isolation valves on fire sprinkler supply piping supplying elevator spaces and elevator machine rooms.

3.5 PIPING ACCESSORIES AND EQUIPMENT INSTALLATION

A. Underground Piping: All bolts, nuts, washers and rodding used for the installation of underground piping, valves and fittings from the riser flange back to, and including, all parts of the water main tap shall be stainless steel conforming to ASTM A194 Grade 8M or ASTM A320 Grade B8M. All of the above materials shall be thoroughly coated with bituminous mastic. After coating, all valves and ferrous fittings shall be wrapped in 8 mil polyethylene film and securely taped in place with underground tape.

3.6 SLEEVES AND ESCUTCHEONS

A. Sleeves: Provide sleeves for all pipes passing through slabs, concrete walls, and lath and plaster ceilings (except drop nipples for heads) and partitions. Sleeves shall extend three inches above

05/03/13 PERMIT SET

floors and be flush with walls, ceilings, and partitions. In concrete construction, sleeves shall be set in forms prior to pour.

B. Clearance between sleeves and pipes shall be one-inch for pipes through 3-1/2-inches, two-inch for pipe sizes 4-inches and greater, and three-inch for seismic joints.

C. Packing: For sleeves set in fire walls and floors, caulk space between pipe and sleeve with flexible fire-resistive packing compound to achieve rating at least equal to that of the wall or floor penetrated. Annular space between sleeves and piping shall be sealed with UL through-penetration systems #49 (concrete) or #147 (gypsum/stud). Sleeves in floors on grade or exterior walls below grade shall be packed with oakum between pipe and sleeve flush with top of sleeve for floors and with outer surface for walls. Sleeves at seismic joints shall not be packed unless associated with a fire rated wall, partition, floor or floor ceiling assembly.

D. Sleeve Material:
   1. In concrete slabs and walls: Schedule 40 black steel pipe.
   2. Sleeves through waterproof membranes: Sleeves set in walls and slabs may be either cast iron or steel and shall be provided with a flashing clamp device and corrosion-resistant clamping holes.

E. Escutcheons: Furnish and install escutcheons on all exposed pipes passing through walls, floors, ceilings, (except for sprinkler heads) and partitions.

3.7 DRAINS AND TEST PIPES

A. Provide drains at locations indicated or requiring for complete drainage of systems. Provide other drains, valves or plugs as indicated or required to meet NFPA 13 recommendations. Pipe drains to approved locations, where required.

B. Provide test pipes as indicated or required locations and piped to discharge at approved locations.

C. Provide all required accessories such funnels air gap fitting, pipe alignment brackets and supports.

3.8 EARTHQUAKE PROTECTION

A. Provide seismic protection for sprinkler and standpipe piping in strict accordance with FM GLOBAL Data Sheet 2-8 “Earthquake Protection for Water-Based Fire Protection Systems.”

3.9 WATER SERVICES

A. Install fire line water services including backflow preventer in accordance with the Rules and Regulations of the City Fire Department and obtain all necessary and required approvals, prior to starting any work. The Project Representative shall pay all water service fees.

3.10 HANGERS, RESTRAINTS AND SUPPORTS

A. All pipes throughout the building shall be thoroughly and substantially supported and restrained with UL listed hangers, restraints and support devices and installed in accordance with Underwriter’s approved methods.

B. Furnish and install any special hangers or supports that may be required due to any peculiarities of construction. The design, selection spacing, and application of horizontal pipe hangers, supports, restraints, anchors, and guides shall be in accordance with the applicable standards.

C. All vertical pipes 8-inch in diameter and smaller shall be supported at least every other floor with Grinnell Figure 261 or approved equal riser clamps.

D. Hanger rods, inserts, etc., shall be sized and installed as recommended by the manufacturer for the service intended. Hanger rods shall be cadmium plated or galvanized.

E. All horizontal piping shall be supported by means of approved wrought iron clevis type hangers with proper size suspension rods and locknuts, spaced as required by the Underwriters.

F. Retainer straps shall be used with all beam clamps.

G. Supports for vertical piping shall be heavy black iron extension clamps with bolts, each end resting on the building structure or hung from the slab in an approved manner.

H. Provide all auxiliary steel required for pipe supports.

I. Submit pipe hanger, restraints insert and support details for concrete floor construction to the Project Representative for review and approval. Piping shall be hung from structural slab by means of malleable iron concrete inserts set in place before concrete is poured. Drilled type concrete inserts may be provided as approved by structural engineer. Power driven studs shall not be accepted unless accepted by the Project Representative.

J. Piping shall not be hung from ductwork, or the work of other trades.

3.11 TESTING

A. General:

1. All inspections, examinations, and tests required by the authorities and/or agencies specified hereinbefore shall be arranged and paid for by this Fire Protection Subcontractor, as necessary to obtain complete and final acceptance of the system as installed. The certificates of inspection shall be in quadruplicate and shall be delivered to the Engineer for distribution.

   Note: All hydrostatic tests shall be performed as required by the reference standards cited hereinbefore and the Authority Having Jurisdiction, except the testing period shall be not less than eight (8) hours.
2. Provide acceptance test consisting of hydrostatic tests of the fire protection piping system in accordance with NFPA Pamphlet No. 13 and No. 14, but at not less than 200 pounds pressure for two (2) hours, or at 50 pounds per square inch in excess of the maximum static pressure when the maximum static pressure is in excess of 150 pounds per square inch.
3. Provide a hydrostatic pre-test, same as acceptance hydrostatic tests indicated in the foregoing paragraph, for both above ground and underground piping, prior to calling for fire marshal acceptance test. Written confirmation of passed 100 percent pre-test shall be given to the inspector of record prior to calling for final acceptance test. All cost associated with delays caused by failure to complete 100 percent operational pre-test shall be borne by the contractor. A Contractor Material and Test Certificate shall be filled out on completion of pre-test.
4. Maintenance testing shall be performed in accordance with this code and Administrative Rules published by the chief. Where certified inspection, testing, or qualification of fire protection equipment is required by nationally recognized standards, laws, ordinances, or administrative rules, the chief shall require that the person, firm, or corporation performing such work have a certificate from the fire department.

B. Fire sprinkler systems: Test in accordance with 2010 edition NFPA 13 .

C. Fire standpipe systems: Test in accordance with 2007 edition NFPA 14.

D. Thread Test: A test shall be made of the thread on the hose valves and fire department connections using a coupling from the Local Fire Department hose. The test shall be made in the presence of the Owner or the Project Representative.

E. Fire alarm devices and tamper switches: Test all alarm devices for proper operation and connection to central alarm system and BMS.

3.12 PERIODIC INSPECTION

A. After completion of the automatic sprinkler system and at the beginning of the warranty period the Automatic Sprinkler Subcontractor shall perform, without charge to the Owner, one (1) inspection of the sprinkler system during the warranty period. Inspection shall be as per the applicable NFPA No. 25, “Inspection, Testing, and Maintenance of Water-Based Fire Protection Systems”, plus the following maintenance to be performed during the course of the inspection:

1. Operation of all control valves.
2. Lubrication of operating stems of all interior valves.
3. Operation of electric alarms, supervisory panels, air compressors, alarm trip switches, flow switches, etc.
4. Lubrication of Fire Department hose connection inlet and fire hose valve threads.

5. The Standard Form of the National Fire Sprinkler Association, Inc., “Report of Inspection” (Sheets 1 and 2), shall be filled out in triplicate after each inspection and the copies sent to the Project Representative.

END OF SECTION

05/03/13 PERMIT SET

SECTION 220501

PLUMBING GENERAL PROVISIONS

PART 1 - GENERAL

1.1 DESCRIPTION

A. The General and Supplementary Conditions and Division 1 are a part of the requirements for the work under this Division of the Specification.

B. The project will have selected building systems commissioned. The equipment and systems to be commissioned are specified in Division 1, Section 019113, General Commissioning Requirements. The commissioning process and contractor responsibilities are described in the section. It is the responsibility of the contractor under this Division to refer to Division 1, Section 019113, General Commissioning Requirements, and coordinate with other trades as required.

1.2 WORK INCLUDED

A. Provide labor and materials required to install, test and place into operation the plumbing systems as called for in the Contract Documents and according to applicable codes and regulations.

B. Provide labor, materials and accessories required to provide complete operating plumbing systems as described or which may be reasonably implied as essential for a complete operating system.

1.3 QUALITY ASSURANCE

A. Comply with current governing codes, ordinances and regulations of the Authority or Authorities Having Jurisdiction over any part of the work and secure all necessary permits. Comply with the regulations and requirements of the Owner's insurance underwriter.

B. Where codes or standards are referenced, the applicable portions apply.

C. Drawings, specifications, codes and standards are minimum requirements. Where requirements differ, apply the more stringent.

D. Should any change in drawings or specifications be required to comply with governing regulations, notify the Engineer prior to submitting bid.

E. Execute work in strict accordance with the best practices of the trades in a thorough, substantial, skillful and well-executed manner by competent workers. Provide a competent, experienced full-time Superintendent who is authorized to make decisions on behalf of the Contractor.

F. The Engineer or Engineer's Representative may conduct unannounced field reviews of any work completed or in progress during the Contractor's working hours. A report will be issued to the Contractor if the field review of the plumbing systems construction has revealed elements of the work, which are inconsistent with the Contract Documents. All items in the report shall be addressed in writing by the Contractor within two (2) weeks and corrections in the field shall be made as directed.

1.4 ABBREVIATIONS AND DEFINITIONS

A. Abbreviations:

1. AABC American Association of Balancing Contractors
2. ABMA American Boiler Manufacturers Association
3. AFBMA Anti-Friction Bearing Manufacturers Association
4. AGA American Gas Association
5. ANSI American National Standards Institute
6. ASA Acoustical Society of America
7. ASHRAE American Society of Heating, Refrigeration, and Air Conditioning Engineers
8. ASME American Society of Mechanical Engineers
9. ASTM American Society for Testing and Materials
10. AWWA American Water Works Association
11. EPA Environmental Protection Agency

05/03/13 PERMIT SET

12. FM Factory Mutual
13. IEEE Institute of Electrical and Electronic Engineers
14. NEBB National Environmental Balancing Bureau
15. NEMA National Electrical Manufacturers Association
16. NFPA National Fire Protection Association
17. OSHA Occupational Safety and Health Administration
18. UL Underwriters Laboratories Inc.

B. Definitions:
1. Where it is stated in the specifications to submit to Engineer or Engineer for review, refer to Architectural General and Special Conditions for proper procedures.
2. “PROVIDE” means to “Furnish” and “Install”.
3. “INSTALL” means to join, unite, fasten, link, attach, set up or otherwise connect together before testing and turning over to Owner, complete and ready for regular operation.
4. “FURNISH” means to supply all materials, labor, equipment, testing apparatus, controls, tests, accessories and all other items customarily required for the proper and complete application.
5. “AS DIRECTED” means as directed by the Engineer, or the Engineer's Representative.
6. “CONCEALED” means embedded in masonry or other construction, installed behind wall furring or within double partitions, or installed within hung ceilings.
7. “SUBMIT” means submit to the Engineer for review.

1.5 GUARANTEE

A. Submit a single guarantee stating that the work is in accordance with Contract Documents. Guarantee work against faulty and improper material, fabrication, installation, start-up and commissioning for a period of one (1) year from date of final acceptance by the Owner, except that where guarantees or warranties for longer terms are specified herein, the longer term shall apply. Correct any deficiencies, which occur during the guarantee period, within 24 hours of notification, at no additional cost to the Owner, to the satisfaction of the Owner. Obtain similar guarantees from subcontractors, manufacturers, suppliers and sub-trade specialists.

1.6 USE OF THE ENGINEER’S DRAWINGS

A. The Contractor shall obtain, at the Contractor’s expense, from the Engineer or Architect a set of AutoCAD or compatible format architectural and engineering drawings on electronic media where desired by the Contractor and/or required by the Specifications for use in preparing the shop drawings, coordination drawings, and record drawings. The Contractor shall provide to the Engineer and Architect a written release of liability acceptable to the Engineer and Architect prior to receiving the electronic media files.

PART 2 - PRODUCTS

2.1 EQUIPMENT AND MATERIALS

A. Provide products and materials that are new, clean, free of defects and free of damage and corrosion.

B. Products and materials shall not contain asbestos, PCBs or any other material that is considered hazardous by the Environmental Protection Agency or any other Authority Having Jurisdiction.

C. Replace materials of less than specified quality and relocate work incorrectly installed as directed by the Engineer.

D. Statically and dynamically balance rotating equipment for minimum vibration and lowest operating noise level.

E. Provide name/data plates on major components of equipment with manufacturer’s name, model number, serial number, capacity data and electrical characteristics attached in a conspicuous place.

F. Install materials and equipment with qualified trades people.

G. Maintain uniformity of manufacture for equipment used in similar applications and sizes.

H. Applicable equipment and materials to be listed by Underwriters Laboratories and manufactured in accordance with ASME, AWWA, or ANSI standards, and as approved by Authorities Having Jurisdiction. The energy-using products shall be certified for use in the State of California and meet State energy efficient standards.

I. Fully lubricate equipment when installed.

J. Do not operate water systems until piping has been cleaned, disinfected and strainers are in place.

K. Install floor-mounted equipment on a 4-inch high concrete pad. Concrete work shall be provided by another trade. Coordinate size and location with actual equipment used and accepted layout shop drawings.

L. Secure equipment with bolts, washers and locknuts of ample size to support equipment. Embedded anchor bolts to have bottom plate and pipe sleeves. Grout machinery set in concrete under entire bearing surface. After grout has set, remove wedges, shims and jack bolts and fill space with grout.

M. Locate valves, traps, shock absorbers, dielectric unions, access doors, etc., to be easily accessible, either in mechanical spaces or through access panels specified. Obtain Engineer's approval of access panel locations.

N. Follow manufacturers' recommendations and instructions for installing, connecting, and adjusting equipment. Provide a copy of such instructions at the equipment during installation.

O. Pressure vessels and relief valves shall be selected, built and labeled in accordance with ASME.

P. Equipment capabilities, etc., are scheduled or specified for job site operating conditions. Equipment sensitive to altitude shall be derated with the method of derating identified on shop drawings.

2.2 ALTERNATIVE EQUIPMENT AND MATERIALS

A. Contract Documents are based on materials specified and on equipment manufacturers indicated. Acceptance of alternative equipment manufacturers does not relieve Contractor of the responsibility to provide equipment and materials, which meet the quality and performance as stated or implied in the Contract Documents.

B. Equipment manufacturers listed in individual sections are acceptable for this project, subject to requirements of Contract Documents.

C. Submit proposals to supply alternate materials or equipment, in writing, with sufficient lead time for review prior to the date equipment must be ordered to maintain project schedule. Reimburse Owner for costs associated with the review of the proposed alternative whether alternative is accepted or rejected.

D. Include revisions required to adapt alternatives in such proposals, including revisions by other trades. No increase in the contract price will be considered to accommodate the use of alternative equipment.

E. Wherever quality standards (such as serviceability, longevity or durability) and operating results (such as noise levels, quantity delivered or pressure obtained) are specified or scheduled, or when the manufacturer and size of equipment, for which such operating results are published or determinable, is specified, the substitution being proposed must conform substantially to the quality and quantities specified or implied. The substitution must fit into available space conditions and must function properly in coordination with the rest of the system.

F. Proposed changes and substitutions of systems, equipment and manufacturers shall be submitted and include the following information with the proposal:
   1. A description of the difference between the existing contract requirements and that proposed, the comparative features of each, and the effect of the change on the end result performance. Include the impact of all changes on other contractors and acknowledge the inclusion of additional costs to other trades.
   2. Schematic drawings and details to supplement the description.
   3. A list of the contract requirements that must be revised if the change is accepted, including any specification revisions.

05/03/13 PERMIT SET

4. Complete list of materials and equipment proposed for use in the change.
5. Include a description and estimate of costs the Owner may incur in implementing the change, such as additional space requirements, permits, architectural and aesthetic impact, design costs, tests, permits evaluation, operating and support costs.
6. A projection of any effects the proposed change would have on collateral costs to the Owner.
7. A statement of the time by which a contract modification accepting the change must be issued, noting any effect on the contract completion time or the delivery schedule.
8. A statement indicating the reduction to the contract price if the Owner accepts the change. Be responsible for appropriate modifications to all trades.

PART 3 - EXECUTION

3.1 FEES

A. Pay all required fees and obtain required permits related to the plumbing installation.

B. Pay royalties or fees in connection with the use of patented devices and systems.

C. Provide controlled or witnessed inspection where required by Authorities Having Jurisdiction or by these specifications.

3.2 SUBMITTALS AND REVIEWS

A. Submit shop drawings, manufacturer's data, samples and test reports as specified.

B. Within two (2) months after notice to proceed by the Owner or Owner's Representative, or after execution of Owner/Contractor Agreement, submit a complete typed list of all plumbing equipment manufacturers and material suppliers for the equipment proposed to be provided on this project as well as names of all subcontractors.

C. Within three (3) months after notice to proceed by the Owner or Owner's Representative or after execution of Owner/Contractor Agreement, prepare an index of all submittals for the project. Include a submittal identification number, a cross-reference to the specification sections or drawing number, and an item description. Prefix the submittal identification number by the specification sections to which they apply. Indicate, on each submittal, the submittal identification number in addition to the other data specified. All subcontractors shall utilize the assigned submittal identification number.

D. After the Contract is awarded, obtain complete shop drawings, product data and samples from the manufacturers, suppliers, vendors, and all subcontractors, for all materials and equipment as specified. Submit data and details of such materials and equipment for review. Prior to submission, certify that the shop drawings, product data and samples are in compliance with the Contract Documents. Check all materials and equipment upon their arrival on the job site and verify their compliance with the Contract Documents. Modify any work, which proceeds prior to receiving accepted shop drawings as required to comply with the Contract Documents and the shop drawings.

E. Review of submittals is for general compliance with the design concept and Contract Documents. Comments or absence of comments does not relieve the Contractor from compliance with the Contract Documents. The Contractor remains solely responsible for details and accuracy, for confirming and correlating all quantities and dimensions, for selecting fabrication processes, for techniques of construction, for performing the work in a safe manner, and for coordinating the work with that of other trades.

F. No part of the work shall be ordered, procured, started in the shop or in the field until the shop drawings and samples for that portion of the work have been submitted, reviewed and returned with either "No Exceptions Noted" or "Exceptions Noted" marked on the submission.

G. A minimum period of ten (10) working days, exclusive of transmittal time, will be required in the Architect/Engineer's office each time a shop drawing, product data and/or samples are submitted for review. This time period must be considered by the Contractor in the scheduling of the work.

H. Submit two (2) bond prints of all items requiring shop drawings. Submit three (3) copies of manufacturer's product submittals organized by specification section number. Submittals not

05/03/13 PERMIT SET

organized by specification will be returned without review. One (1) bond print or two (2) copies of submittals will be returned. Additional copies are the responsibility of the Contractor. Electronic media will not be reviewed.

I. Submissions will be stamped as follows:

Stamp	Interpretation
No Exceptions Noted	Fabrication, manufacture, or construction may proceed providing submittal complies with the Contract Documents.
Exceptions Noted: [ ] Resubmit for Record [ ] No Resubmission Required	Fabrication, manufacture, or construction may proceed providing submittal complies with the Contract Documents and Engineer's notations are complied with. Within this category are two options. A resubmission for our records is required when corrections are necessary. A resubmission is not required if there are only minor comments.
Revise and Resubmit	The submittal does not comply with the Contract Documents; do not proceed with fabrication, manufacture, or construction. The work and shop drawings are not permitted at the job site. Resubmit appropriate shop drawings.

J. Submit materials and equipment by manufacturer, trade name and model number. Include clear, legible copies of applicable brochure or catalog material. Maintenance and operating manuals are not suitable substitutes for shop drawings.

K. Identify each sheet of printed submittal pages (using arrows, underlining or circling) to show applicable sizes, types, model numbers, ratings, capacities and options actually being proposed. Cross out non-applicable information. Note specified features such as voltages, motor efficiencies, special tank linings, pump seals, materials or paint finishes. Cross out all references to "options". Cross out statements such as "subject to change without notice" or "not for construction". Anything not specifically excluded is assumed to be included.

L. Include dimensional data for roughing in and installation, technical data sufficient to verify that equipment meets requirements of the Contract Documents. Include wiring, piping and service connection data, motor sizes complete with voltage ratings, and schedules.

M. Maintain a complete set of the most current reviewed and stamped shop drawings and product data on site.

N. Prepare and submit detailed shop drawings for piping work and other distribution services in minimum 1/4-inch to 1-foot scale, including elevations and locations and sizes of openings in floor decks, walls and roofs.

O. The work described in shop drawing and product data submittals shall be carefully checked by all trades for clearances (including those required for code compliance, maintenance and servicing), field conditions, maintenance of architectural conditions and proper coordination with other trades on the job. Each submitted shop drawing to include a certification that related field conditions and requirements have been checked by all Contractors and Subcontractors and that conflicts do not exist.

P. The Contractor is not relieved of the responsibility for dimensions or errors that may be contained on submissions or for deviations from requirements in the Contract Documents. The noting of some errors but overlooking others does not grant the Contractor permission to proceed in error. Regardless of any information contained in the shop drawings, product data and samples, the Contract Documents govern the work and are neither waived nor superseded in any way by the review of shop drawings, product data and samples.

Q. Inadequate or incomplete shop drawings, product data and/or samples will not be reviewed and will be returned to the Contractor for resubmittal.

05/03/13 PERMIT SET

R. Indicate the following in the lower right hand corner of each shop drawing, and on the front cover of each product data brochure: the submittal identification number; title of the sheet or brochure; name and location of the Project; names of the Architect, Engineer, Contractor, Subcontractor, Manufacturer, Supplier, and Vendor; the date of submittal; and the date of each correction, version and revision. Number all pages and drawings in product data brochures, test reports or submittals consecutively from beginning to end. Unless the above information is included, the submittal will be returned for resubmission. Resubmittals of shop drawings or product data or brochures shall include a cover letter summarizing the corrections made in response to the review comments.

3.3 COORDINATION OF WORK

A. The Contract Documents establish scope, materials and quality but are not detailed installation instructions. Drawings are diagrammatic.

B. The Contract Documents show the general arrangement of equipment, ductwork, piping and accessories. Follow these drawings as closely as the actual construction and the work of other trades will permit. Provide offsets, fittings, and accessories, which may be required but not shown on the Drawings. Investigate the site and review drawings of other trades to determine conditions affecting the work and provide such work and accessories as may be required to accommodate such conditions.

C. Certain products will be provided by other trades. Examine the Contract Documents to ascertain the requirements for installation of these products.

D. Carefully check space requirements with other trades to insure that material can be installed in the spaces allotted.

E. Wherever work interconnects with work of other trades, coordinate with other trades to insure that they have the information necessary so that they may properly install the necessary connections and equipment. Identify items (valves, etc.) requiring access in order that the ceiling and partition contractors can install access doors and panels in the correct locations.

F. Consult with other trades regarding equipment so that, wherever possible, motors, motor controls, pumps and valves are of the same manufacturer.

G. Furnish and set sleeves for passage of pipes, and conduits through structural masonry and concrete walls, roofs and floors and elsewhere as will be required for the proper protection of each pipe passing through building surfaces.

H. Install firestopping around all pipes, conduits, etc., which pass through rated walls, partitions and floors in strict accordance with the manufacturer's published approval listing and rating.

I. Provide detailed information on openings and holes required in structural elements and pre-cast panels or components for plumbing work.

J. Provide required structural or architectural supports and hangers for piping and equipment, designed so as not to exceed allowable loadings of structures.

K. Examine and compare the Contract Drawings and Specifications with the drawings and specifications of other trades, report any discrepancies between them to the Engineer and obtain written instructions for changes necessary in the work. Install and coordinate the work in cooperation with other related trades. Before installation, make proper provisions to avoid interferences.

L. Wherever the work is of sufficient complexity, prepare additional detail drawings to scale to coordinate the work with the work of other trades. Detailed work shall be clearly identified on the Drawings as to the area to which it applies. Submit these drawings to the Engineer for review. At completion include a set of these drawings with each set of record drawings.

M. Before commencing work, examine adjoining work on which this work is in any way dependent and report conditions that prevent performance of the work. Become thoroughly familiar with actual existing conditions to which connections must be made or which must be changed or altered.

N. Adjust location of pipes, panels, equipment, etc., to accommodate the work to prevent interferences, both anticipated and encountered. Determine the exact route and location of each pipe prior to fabrication.
   1. Right-of-Way: Lines which pitch have right-of-way over those which do not pitch. For example: condensate, steam, and plumbing drains normally have right-of-way. Lines whose elevations cannot be changed have right-of-way over lines whose elevations can be changed.
   2. Provide offsets and changes in direction of pipes as required to maintain proper head room and pitch on sloping lines. Provide traps, air vents, drains, etc., as required to effect these offsets and changes in direction.

O. Install plumbing work to permit removal (without damage to other parts) boiler tube bundles, controls, sheaves and drives, and any other parts requiring periodic replacement or maintenance. Arrange pipes and equipment to permit access to valves, cocks, traps, starters, motors, and control components, and to clear the openings of swinging doors and access panels.

P. In cases of doubt as to the work intended, or in the event of need for explanation thereof, request supplementary instructions from the Engineer.

3.4 CONTRACTOR'S COORDINATION DRAWINGS

A. The Contractor shall coordinate efforts of all trades and shall furnish (in writing, with copies to the Engineer) any information necessary to permit the work of all trades to be installed satisfactorily and with the least possible interference or delay.

B. The Contractor and all trade contractors shall prepare a complete set of construction Coordination Drawings indicating the equipment actually purchased and the exact routing for all lines such as piping, busway, conduit, ductwork, etc., including conduit embedded in concrete floors and walls. The Coordination Drawings shall be submitted complete to the Architect and the Engineer within three (3) months after notice to proceed is given and in compliance with the construction schedule for the project. The sheet metal drawings, at a scale of not less than 1/4-inch to 1-foot, shall serve as the base drawings to which all other Contractors shall add their work. Each separate Trade Contractor shall draw their work on separate layers with different color assignments to facilitate coordination. Each Coordination Drawing shall be completed and signed off by the other Trade Contractors and the Contractor prior to the installation of the HVAC, plumbing, electrical, fire protection and fire sprinkler work in the area covered by the specific drawing. The Contractor's work shall be installed according to the shop drawings and Coordination Drawings. If the Contractor allows one trade to install their work before coordination with the work of other trades, the Contractor shall make all necessary changes to correct the condition at no additional cost to the Owner.

C. The Contractor's Coordination Drawings shall indicate structural loads at support points for all piping 10-inch and larger, racked piping, racked conduit and busway. Submit to Structural Engineer for review and approval. The elevation, location, support points, static, dynamic and expansion forces and loads imposed on the structure at support and anchor points shall be indicated. All beam penetrations and slab penetrations shall be indicated and sized and shall be coordinated. Work routed underground or embedded in concrete shall be indicated by dimension to column and building lines and shall be coordinated. Coordination Drawings shall document all required structural penetrations for initial construction. Penetrations shall be dimensioned for walls, floors and roofs. These structural coordination requirements require review and approval by the Structural Engineer prior to completion and submittal of the Drawings.

D. This requirement for Coordination Drawings shall not be construed as authorization for the Contractor or trade contractors to make any unauthorized changes to the Contract Documents. Contract document space allocations shall be maintained such as ceiling height, designated clearance for future construction and flexibility, chase walls, equipment room size, unless prior written authorization is received from the Engineer to change them.

E. Prior to final acceptance of the work, the Contractor shall submit the Coordination Drawings as part of the Record Drawing submittal.

05/03/13 PERMIT SET

3.5 EXAMINATION OF SITE

A. The Contract Documents do not make representations regarding the character or extent of the subsoils, water levels, existing structural, mechanical and electrical installations, above or below ground, or other sub-surface conditions which may be encountered during the work.

B. Evaluate existing conditions that may affect methods or cost of performing the work, based on examination of the site or other information. Failure to examine the Drawings or other information does not relieve the Contractor of responsibility for satisfactory completion of the work.

3.6 EXCAVATION AND BACKFILL

A. Provide excavation for the work of this Division. Excavate all material encountered, to the depths indicated on the Drawings or as required. Remove excavated materials not required or suitable for backfill from the site. Provide grading as may be necessary to prevent surface water from flowing into trenches or other excavations. Remove any water that accumulates. Provide sheeting and shoring as may be necessary for the protection of the work and for the safety of personnel.

B. Provide trenches of widths necessary for the proper execution of the work. Grade bottom of the trenches accurately to provide uniform bearing and support the work on undisturbed soil at every point along its entire length. Except where rock is encountered, do not excavate below the depths indicated. Where rock excavations are required, excavate rock to a minimum overdepth of four inches below the trench depths indicated on the Drawings or as required. Backfill overdepths in the rock excavation and unauthorized overdepths with loose, granular, moist earth, thoroughly machine tamped to a compaction level of at least 95 percent of standard proctor density or 75 percent relative density or as specified by the Engineer. Whenever unstable soil that is incapable of properly supporting the work is encountered in the bottom of the trench, remove soil to a depth required and backfill the trench to the proper grade with coarse sand, fine gravel or other suitable material.

C. Excavate trenches for utilities that will provide the required minimum depths of cover from existing grade or from indicated finished grade, whichever is lower, unless otherwise specifically shown.

D. Trenches shall not be placed within ten (10) feet of foundation or soil surfaces that must resist horizontal forces.

E. Do not backfill trenches until all required tests have been performed and the installation observed by the Engineer. Comply with the requirements of other sections of the specifications. Backfill shall consist of non-expansive material with limited porosity. Deposit backfill in 6-inch thick layers and tamp carefully until the plumbing work is covered by not less than 12 inches of material. Backfill and tamp remainder of trench at 1-foot intervals until complete. Uniformly grade the finished surface.

3.7 CUTTING AND PATCHING

A. Where cutting, channeling, or drilling of floors, walls, partitions, ceilings or other surfaces is necessary for the proper installation, support or anchorage of piping or equipment, lay out the work carefully in advance. Repair any damage to the building, piping, equipment or finishes using skilled tradesmen for all required work.

B. Do not cut, channel or drill unfinished masonry, tile, etc. unless written permission is obtained from the Engineer. Perform this work in a manner acceptable to the Engineer.

C. Where piping or equipment are mounted on a painted finished surface, or a surface to be painted, paint to match the surface. Cold galvanize bare metal whenever support channels are cut.

D. Provide slots, chases, openings and recesses through floors, walls, ceilings and roofs as required. Where these openings are not provided, provide cutting and patching to accommodate penetrations at no additional cost to the Owner.

3.8 PROHIBITED LABELS AND IDENTIFICATIONS

A. Prohibited Markings: In all public areas, tenant areas, storage areas and similar locations within the project, the inclusion or installation of any equipment, fixture or assembly which bears on any exposed surface any name, trademark, or other insignia which is intended to identify the

05/03/13 PERMIT SET

manufacturer, the vendor, or other source(s) from which such object has been obtained, is prohibited.

B. Exception: Required Underwriters Laboratories labels shall not be removed nor shall identification specifically required under the various technical sections of the Specifications be removed.

3.9 EQUIPMENT PAD AND ANCHOR BOLTS

A. Provide concrete pads under all floor-mounted plumbing equipment. This includes electrical components, equipment mounted on legs and pipe support stands. Equipment pads shall conform to the shape of the piece of equipment it serves with a minimum 2-inch margin around the equipment and supports. Pads shall be a minimum of 4 inches high and made of a minimum 28-day, 2500-psi concrete reinforced with 6-inch by 6-inch 6/6-gauge welded wire mesh. Trowel tops and sides of pad to smooth finishes, equal to those of the floors, with all external corners bullnosed to a 3/4-inch radius. Use shop drawings stamped “NO EXCEPTIONS NOTED” or “EXCEPTIONS NOTED” for dimensional guidance in sizing pads.

B. Provide galvanized anchor bolts for all equipment placed on concrete equipment pads, inertia blocks, or on concrete slabs. Verify bolts size, number and embed depth recommended by the manufacturer of the equipment with seismic calculations as specified, and locate by means of suitable templates.

C. Where equipment is mounted on gypsum board partitions, the mounting screws will pass through the gypsum board and be securely attached to the partition studs. As an alternative, the mounting screws may pass through the gypsum board and be securely attached to 6-inch square, 18-gauge galvanized metal backplates that are attached to the gypsum board with an approved non-flammable adhesive. Toggle bolts installed in gypsum board partitions are not acceptable.

3.10 DELIVERY, DRAYAGE AND HAULING

A. Include all drayage, hauling, hoisting, shoring and placement in the building of equipment specified and be responsible for the timely delivery and introduction of equipment to the project as required by the construction schedule. If any item of equipment is received prior to the time it is required, be responsible for its proper storage and protection until the time it is required. Pay for all costs of demurrage or storage.

B. If equipment is not delivered or installed at the project site in a timely manner as required by the project construction schedule, the Contractor shall be responsible for disassembly, re-assembly, manufacturer’s supervision, shoring, general construction modification, delays, overtime costs, etc., at no additional cost to the Owner.

3.11 EQUIPMENT AND MATERIAL PROTECTION

A. Protect the work, equipment and material of other trades from damage by work or workers of this trade, and correct damage caused without additional cost to the Owner.

B. The Contractor shall be responsible for all work, materials and equipment until finally inspected, tested and accepted. Protect work against theft, injury or damage; and carefully store material and equipment received on site that is not immediately installed. Close open ends of work with temporary covers or plugs during construction to prevent entry of dust, dirt, water or other obstructing material. Cover and protect equipment and materials from damage due to water, moisture, humidity, paint, spray-on fireproofing, construction debris, etc. Store equipment subject to moisture damage, such as insulation or electrical components in dry heated spaces.

C. Provide adequate means for fully protecting finished parts of the materials and equipment against damage from whatever cause during the progress of the work until final acceptance. Protect materials and equipment in storage and during construction in such a manner that no finished surfaces will be damaged or marred, and moving parts are kept clean and dry. Do not install damaged items; take immediate steps to obtain replacement or repair. Replace all wet or damp insulation.

05/03/13 PERMIT SET

3.12 ELECTRICAL EQUIPMENT AND ELECTRICAL ROOM PRECAUTIONS

A. Do not install piping or equipment not included as part of the electrical work, in the following rooms: switchgear, transformer, generator, elevator equipment, telephone, fire command, security, dimmer or electrical equipment rooms.

B. Do not install piping, equipment above switchboards, disconnects, panelboards, dimmers, control panels, VFDs, motor control centers, individual motor controllers, electronics, etc. or the code required service space for these electrical devices.

3.13 EQUIPMENT GUARDS

A. Provide easily (without tools) removable expanded metal guards for all hot surfaces, belts, couplings, and other moving parts of machinery. Provide tachometer openings in the guards at least 2 inches in diameter, for all belt-driven, gear-driven or variable speed machinery. Comply with OSHA requirements for all equipment guards.

3.14 LUBRICATION

A. Provide means for lubricating all bearings and other machine parts. If a part requiring lubrication is concealed or inaccessible, extend a metallic lubrication tube with suitable fitting to an accessible location and identify it with permanent laminated plastic nameplates. Identify this location in the maintenance manual.

B. After installation, properly lubricate all parts requiring lubrication and keep them adequately lubricated with a lubricant recommended by the equipment manufacturer until Owner acceptance.

3.15 DATE OF COMPLETION AND TESTING OF PLUMBING SYSTEMS

A. Comply with the project construction schedule for the date of final performance and acceptance testing, and complete work sufficiently in advance of the Contract completion date to permit the execution of the testing prior to occupancy and the Contract closeout. Complete any adjustments and/or alterations that the final acceptance tests indicate as necessary for the proper functioning of all equipment prior to the completion date. See individual sections for extent of testing required.

B. Provide a detailed schedule of completion indicating when each system is to be completed and outlining when tests will be performed. Submit completion schedule for review within three (3) months after the notice to proceed by Owner or Owner's Representative has been given. Update this schedule periodically as the project progresses.

3.16 OPERATING INSTRUCTIONS AND OPERATOR TRAINING

A. Provide the services of factory-trained specialists to supervise the operation of all equipment and systems specified and train the Owner's operating and maintenance personnel for a three (3) day operating/instruction period. Operating instruction time is defined as straight time working hours and not including nights, weekends or travel time to and from the project. Refer to individual sections for additional training and instruction by manufacturer's trained specialists.

B. Notify the Owner in writing at least three (3) weeks before the operating/instruction period begins. Do not commence until the Owner has issued written acceptance of the starting time and schedule.

C. In addition to the operating/instruction period, organize and conduct a seminar to instruct the Owner's Representatives in the operation and general preventative maintenance of equipment and systems provided at the completion of the project.

D. Instruct Owner's operating personnel in proper starting sequences, operation, shutdown, and maintenance procedures, including normal and emergency procedures.

E. Make arrangements to give instructions by system and not by building areas.

F. Provide services of qualified personnel, including each sub-trade, each major equipment supplier to attend seminar and instruct on respective equipment or systems. Seminar shall be conducted by the Contractor and may be videotaped and attended by the Engineer or Engineer's Representative.

05/03/13 PERMIT SET

G. Submit seminar agenda, schedule and list of representatives to the Owner for review thirty (30) days prior to seminar. Confirm attendance at seminar by written notification to participants.

H. At seminar, submit final copies of record drawings and operating and maintenance manuals to Owner.

I. Submit a written record of the seminar, complete with an attendance list to the Owner.

3.17 OPERATING AND MAINTENANCE MANUALS

A. Provide operating instructions and maintenance manuals for all equipment and materials furnished under this Division.

B. Submit three (3) final copies of operating and maintenance data books for review at least ten (10) weeks before the completion date. Provide 8.5-inch by 11-inch, expanding spine catalog binders bound with heavy red fabric, hot stamp lettering on front and spine identifying project name and Owner's name. Assemble data in a completely indexed volume or volumes and identify the size, model, and features indicated for each item.

C. Index the maintenance manual according to the following system:
   1. Tab – 1.0 Plumbing Systems: Title page identifying project, Owner, Contractor and Engineer with clear plastic protection cover.
   2. Tab – 1.1 List of Plumbing Drawings.
   3. Tab – 1.2 Description of Systems: Provide complete descriptions of the operating sequence for each system. Include detailed system description, with individual components described, and description of how components interface with others and to the complete system.
   4. Tab – 1.3 Operating Division: Provide information on locations of components, how to energize switches and controls, how components interface with other components, operation of controls including operational sequence, complete troubleshooting sequence, and failure and safeguards to indicate if equipment goes off-line.
   5. Tab – 1.4 Maintenance and Lubrication Division: Provide general maintenance and lubrication schedule for major components and include daily, weekly, monthly, quarterly, semiannual and yearly checks and tasks. Explain how to execute maintenance tasks required for typical equipment such as bearings, drives, motors and filters. Compile this information for equipment separate from shop drawings.
   6. Tab – 1.5 List of Equipment Suppliers and Contractors: Provide list of equipment suppliers and contractors, including street addresses, website addresses, fax and toll-free telephone numbers.
   7. Tab – Certification (2.0, 2.1, etc.): Include copy of test data on disinfection, chlorination and flushing of systems, analysis of water quality taken at time system was put into operation, hydrostatic or air tests performed on piping systems, equipment alignment certifications, copy of balancing data for water systems, copy of valve identification and pipe color code and inspection approval certificates from Authorities Having Jurisdiction.
   8. Tab – Shop Drawings and Maintenance Bulletins (3.0, 3.1, 3.2, etc.): Provide material received in compliance with clause "Submittals and Reviews".

D. The manual divider and tabs shall be laminated mylar plastic and colored as follows:

Plumbing Systems	1.0	–	1.5	Orange
Certification	2.0	–	2.4	Green
Shop Drawings & Maintenance	3.0	–	3.17	Yellow

E. Plastic tabs with typewritten card insertions will not be accepted.

F. Maintenance information shall include complete lubrication, cleaning, and servicing data compiled in clearly and easily understandable format. Show model and serial number of each piece of equipment, complete lists of replacement parts, capacity ratings, and actual loads.

G. Provide the following equipment maintenance information where applicable:
   1. Identifying name and number
   2. Locations (where several similar items are used, provide a list)
   3. Complete nameplate data
   4. Parts list
   5. Performance curves and data

05/03/13 PERMIT SET

6. Wiring diagrams
7. Lubrication charts
8. Manufacturers' recommended operating and maintenance instructions, with all non-applicable information deleted
9. List of spare parts recommended for normal service requirements
10. Assembly and disassembly instructions with exploded view Drawings, where necessary
11. Trouble shooting diagnostic instructions, where applicable

3.18 RECORD DRAWINGS

A. The Contractor shall maintain on a daily basis at the project site a complete set of Record Drawings. The Record Drawings shall initially consist of a set of blueline prints or AutoCAD files of the Contractor's Coordination Drawings. The prints shall be marked or the AutoCAD files electronically updated to show the precise location of all buried or concealed work and equipment, including embedded piping and valves, and all changes and deviations in the plumbing work from that shown on the Contract Documents. This requirement shall not be construed as authorization for the Contractor to make changes in the layout or work without definite written instructions from the Architect or Engineer. The updated Coordination Drawings shall be used to produce the final Record Drawings that shall be delivered to the Owner in AutoCAD electronic format media upon project completion.

B. Record dimensions clearly and accurately to delineate the work as installed. Suitably identify locations of all equipment by at least two (2) dimensions to permanent structures.

C. The Contractor and subcontractor shall mark all in-progress Record Drawings on the front lower right hand corner with a rubber stamp impression or an AutoCAD image similar to the following:

RECORD DRAWING
(3/8-inch high letters)

To be used for recording Field Deviations
and Dimensional Data Only
(5/16-inch high letters)

D. Upon completion of the work, the Contractor and subcontractors shall certify all Record Drawings on the front lower right hand corner adjacent to the above marking with a rubber stamp impression or an AutoCAD image similar to the following:

RECORD DRAWING
CERTIFIED CORRECT
(3/8-inch high letters)

(Printed Name of General Contractor)
(5/16-inch high letters)

Date:

(Printed Name of Subcontractor)
(5/16-inch high letters)

Date:

E. Prior to final acceptance of the work of this Division, the Contractor shall submit properly certified Record Drawings to the Architect and Engineer for review and shall make changes, corrections, or additions as the Architect and/or Engineer may require to the Record Drawings. After the Architect's and Engineer's review, and any required Contractor revisions, the Record Drawings shall be delivered to the Owner on electronic media in AutoCAD format. The Architect and

Engineer do not assume any responsibility for the accuracy or completeness of the Record Drawings.

3.19 CERTIFICATION

A. Any certifications required by the Specifications, in addition to those required for shop drawings, product data, equipment and other items, are to be so certified in writing by the Owner, a Partner, or a Corporate Officer of the firm required to provide the Certification, or by another person duly authorized to sign binding agreements for and on behalf of the Owner, Partner or Corporation.

3.20 FINAL REVIEW

A. At a time designated by the Owner, the entire system shall be reviewed for compliance with the Contract Drawings and Specifications. Be available at all times during this review.

B. Demonstrate to the Owner and/or the Engineer's personnel prior to the Final Review that systems and equipment have been properly balanced and adjusted and are in compliance with the requirements of the Contract Documents. After these demonstration tests are satisfactorily completed, but prior to the Final Review, submit a written certification that: 1) attests to the Contract Document compliance for this project; and 2) certifies that the equipment and materials installed in this project contain no lead, asbestos or PCB. Prior to the final review, the Contractor shall confirm the following items regarding the status of key elements of the work. Negative responses to any of the items indicate that the construction is not substantially complete, and the building is not ready for a final review. The Contractor shall confirm the following in writing:

1. Building has normal electrical power.
2. The emergency or stand-by power system has been started up, commissioned, and is standing by.
3. Building systems have been cleaned.
4. Seismic restraints have been inspected as specified. Any required special inspections have been completed.
5. Building systems have been balanced and copy of balance report submitted to the Engineer.
6. Building fire and life safety systems have been tested and accepted by the local authorities. Any required special inspections have been completed.
7. All final wiring connections have been rechecked.
8. All base building lighting systems are completely installed and operating.
9. The domestic cold water system has been installed, flushed, disinfected, tested and operating.
10. The domestic hot water systems are completely installed, flushed, disinfected, tested and operating.
11. The sanitary sewer and storm sewer systems are completely installed, operating, connected to the required city, public or private utilities and pressure tested.
12. There are no deviations or non-compliance with the Contract Documents; otherwise, provide a detailed account of any and all deviations or non-compliance.
13. All items on field review reports have been responded to in writing and are resolved to the satisfaction of the Owner.
14. All outstanding items on submittals and shop drawings have been addressed in writing and are resolved to the satisfaction of the Owner.
15. Schedule the final review only after providing written confirmation of all items above. Provide a minimum of ten (10) days notice.

C. Certificates and Documents required by the Contract shall be presented to the Engineer at least two (2) weeks prior to the Final Review.

D. After the Final Review, any changes or corrections noted as necessary for the work to comply with the Contract Documents shall be accomplished without delay in order to secure final acceptance of the work.

3.21 EARLY OCCUPANCY

A. Be responsible for completing those systems, which are necessary to allow partial occupancy of the building even if systems in the unoccupied areas are incomplete.

05/03/13 PERMIT SET

B. Verify and comply with requirements for temporary occupancy with the local Building Department.

END OF SECTION

05/03/13 PERMIT SET

SECTION 220516

EXPANSION COMPENSATION FOR PLUMBING

PART 1 - GENERAL

1.1 WORK INCLUDED

A. The work of this Section shall include, but is not limited to, the following:
   1. Expansion loops and flexible expansion loops
   2. Expansion compensators
   3. Pipe alignment guides and anchors
   4. Expansion joints

1.2 RELATED DOCUMENTS

A. Section 22 05 01 - Plumbing General Provisions

B. Section 22 05 29 - Supports, Hangers, Anchors and Sleeves for Plumbing

C. Section 22 05 48 - Vibration Isolation and Seismic Restraints for Plumbing

1.3 REFERENCE STANDARDS

Published specifications standards, tests or recommended methods of trade, industry or governmental organizations apply to work in this Section where cited below:

A. AGA – American Gas Association

B. ANSI – American National Standards Institute
   1. ANSI Z223.1 – 2009: National Fuel Gas Code

C. ASME – American Society of Mechanical Engineers
   1. ASME Standard for Boiler and Pressure Vessel Code – 2007
      a. ASME BPVC – I through XII
   2. ASME B18.10 – 2006: Track Bolts and Nuts
   3. ASME B31.9 – 2008: Building Services Piping

D. ASTM – American Society for Testing and Materials
   1. ASTM A 53 / A 53M – 2007: Standard Specification for Pipe, Steel, Black and Hot-Dipped, Zinc-Coated, Welded and Seamless
   2. ASTM A 183 – 2003 Revised 2009: Standard Specification for Carbon Steel Track Bolts and Nuts
   3. ASTM B 650 – 1995 Revised 2008: Standard Specification for Electrodeposited Engineering Chromium Coatings on Ferrous Substrates
   4. ASTM F844 – 2007: Standard Specification for Washers, Steel, Plain (Flat), Unhardened for General Use
   5. ASTM F1120 – 1987 Revised 2004: Standard Specification for Circular Metallic Bellows Type Expansion Joints for Piping Applications
   6. ASTM F1123 – 1987 Revised 2004: Standard Specification for Non-Metallic Expansion Joints

E. AWWA – American Water Works Association
   1. AWWA C153/A21.53 – 2006: Ductile-Iron Compact Fittings for Water Service
   2. AWWA C210 – 2008: Liquid-Epoxy Coating Systems for the Interior and Exterior of Steel Water Pipelines
   3. AWWA C213 – 2007: Fusion-Bonded Epoxy Coating for the Interior and Exterior of Steel Water Pipelines

F. NFPA – National Fire Protection Association
   1. NFPA 99, Edition 05 – Standard for Health Care Facilities, with California amendments

G. NSF – National Sanitation Foundation
   1. NSF Standard 61, edition 08: Drinking Water System Components – Health Effects, with California amendments

H. UL – Underwriters Laboratories Inc.

05/03/13 PERMIT SET

1.4 QUALITY ASSURANCE

A. Flexible expansion joints shall be AGA certified for use on gas piping.

B. Flexible expansion joints for potable water piping shall be UL classified in accordance with NSF 61.

1.5 SUBMITTALS

A. Product Data: For each type of expansion fitting indicated.

B. Shop Drawings: Signed and sealed by a qualified professional engineer.
   1. Design Calculations: For thermal expansion of piping systems and selection and design of expansion fittings and loops.
   2. Anchor Details: Detail fabrication of each indicated. Show dimensions and methods of assembly.
   3. Alignment Guide Details: Detail field assembly and anchorage.

C. Schedule: Indicate manufacturer's number, size, location, and features for each expansion fitting and loop.

PART 2 - PRODUCTS

2.1 ACCEPTABLE MANUFACTURERS

A. Flexible Expansion Loops: MetraFlex, Hyspan

B. Flexible Expansion Joints, Buried: Double ball configuration, “Flex-Tend” as manufactured by EBAA Iron, Inc., or equal (no known equal)

C. Expansion Compensator: MetraFlex Model HP, Flexonics Model H or HP, Hyspan Series 8540 up to 4-inch pipe size

D. Pipe Alignment Guides: Pipe Shields Series E2000 for insulated pipes; B-Line, Grinnell, Hyspan Series 9500 or MetraFlex for uninsulated pipes

E. Expansion Joints:
   1. Flexible Hose: Flexicraft, MetraFlex
   2. Flexible Ball: Advanced Thermal, Hyspan
   3. Metal-Bellows: Adsco, Anamet, Badger, Hyspan, MetraFlex, Proco

2.2 PERFORMANCE REQUIREMENTS

A. Expansion compensator shall be capable of elongating and compressing to absorb 200 percent of maximum piping expansion between anchors.

B. Pipe alignment guides shall be selected for both upward and downward motion.

2.3 FLEXIBLE EXPANSION LOOPS

A. Provide flexible expansion loops of size and material noted on the Drawings.

B. Flexible loops shall be designed to not impart thrust loads on the anchors. The loop shall consist of two flexible sections of hose and braid, two (2) 90-degree elbows, and a 180-degree return. Loops shall be installed in a neutral, pre-compressed, or pre-extended condition as required for application.

C. Loops installed hanging down shall have a drain plug. Loops installed straight up may be fitted with an automatic air release valve that purges air from the high point of the loop. Loops installed in any position other than hanging down must have the 180-degree return supported. Loops for drainage piping must be installed hanging down and be provided with a full-size cleanout Tee at bottom of loop.

D. Joints for copper piping and fittings with solder-joint end connections:
   1. 2-inch and smaller: Bronze hoses and single-braid bronze sheaths with 340 psig at 450 degrees F minimum pressure ratings.

E. Joints for steel piping:
   1. End connections shall be threaded up to 2-inch and flanged for all other sizes.

05/03/13 PERMIT SET

2. Joints, up to 2-inch: Stainless-steel hoses and single-braid, stainless-steel sheaths with 325 psig at 600 degrees F minimum pressure ratings.

2.4 EXPANSION COMPENSATORS

A. Constructed of two-ply stainless steel bellows with copper shrouds, and with copper solder joint fittings. Compensators shall be rated 175 psig minimum, with internal guides, anti-torque device, and removable end clip for positioning.

B. Provide internal guides for the full length of the bellows travel.

2.5 EXPANSION JOINTS

A. Flexible Ball Type:
1. Carbon-steel assembly with asbestos-free composition packing, designed for 360-degree rotation and angular deflection.
2. 250 psig at 400 degrees F minimum pressure rating; comply with ASME Boiler and Pressure Vessel Code: Section II, and ASME B31.9 for materials and design of pressure-containing parts and bolting.
3. End connections shall be threaded up to 2-inch and flanged for all other sizes.
4. Joints for 6-inch and smaller shall be 30-degree angular deflection minimum.

B. UL-Listed Seismic Type:
1. All sprinkler and fire standpipe piping passing through or crossing building seismic joints shall contain a flexible expansion loop designed for seismic movement.
2. Flexible loops shall impart no thrust loads to system support anchors or building structure. Loops shall be located at, or near, the building seismic joint.
3. A vertical support hanger, located within 4 pipe diameters, shall be installed on each side of the flexible loop. Each hanger to be transversely and longitudinally braced per local codes. Seismic bracing shall not pass through building seismic joint and shall not connect or tie together different sides or parts of building structure.
4. Flexible loops shall be capable of movement in the ±X, ±Y, ±Z planes. Movement requirements and location, relative to seismic separation, shall be confirmed by the structural design engineer.
5. Flexible loops may be installed to accommodate thermal expansion, seismic movement, and building settlement.
6. Flexible loop connections to sprinkler piping shall be installed, inspected, and tested in accordance with current NFPA-13 standards.
7. Flexible loops shall consist of two flexible sections of hose and braid, two 90-degree elbows, and 180-degree return. Loops shall include a factory supplied, center support nut located at the bottom of the 180-degree return, and a drain/air release plug.
8. Materials of construction and end fitting type shall be consistent with pipe material and equipment/pipe connection fittings.
9. Flexible expansion/seismic loops to be Metraloop® Fireloop™ as manufactured by The MetraFlex Company, Chicago®, IL.

2.6 MISCELLANEOUS MATERIALS

A. Guides shall be steel, factory fabricated, with bolted two-section outer cylinder and base for alignment of piping and two-section guiding spider for bolting to pipe.

B. Bolts and Nuts: ASME B18.10 or ASTM A 183, steel, hex head.

C. Washers: ASTM F 844, steel, plain, flat washers.

D. Mechanical Fasteners: Insert-wedge-type stud with expansion plug anchor for use in hardened Portland cement concrete, and tension and shear capacities appropriate for application.

PART 3 - EXECUTION

3.1 INSTALLATION

A. Provide at least two (2) guides each side of each expansion loop, compensator or joint. Size guide cylinder to allow the full insulation thickness to be carried through the guide with ample

05/03/13 PERMIT SET

clearance and without restricting the free movement of the pipe. Size guide cylinder for sufficient length to contain the total movement of the spider. Rigidly anchor pipe guide to building structure.

B. Install expansion fittings according to manufacturer's written instructions in sizes matching pipe size in which they are installed. Align expansion fittings to avoid end-loading and torsional stress.

C. Provide expansion loops, compensators or joints as shown on the Drawings.

D. Provide minimum of three (3) elbow offsets on branch pipe connections into mains and at each riser takeoff to allow piping flexibility and expansion.

E. Install flexible loop within four (4) pipe diameters, both upstream and downstream, from a pipe guide or anchor.

3.2 EXPANSION COMPENSATOR OR JOINT INSTALLATION

A. The bellows element shall be protected from damage. Dents, scores, arc strikes, weld spatter, and other damage can cause the joint to fail. Damaged compensators or joints shall not be used.

B. Align joint flange and pipe flange holes. Do not try to compensate for flange or pipe misalignment by putting a torsional, compressive, extension, or offset loads on the expansion compensator or joint. Good practice requires that a mating flange in the piping system remain unwelded until the expansion compensator or joint has been bolted into position.

C. All anchors, guides, and supports must be installed according to manufacturer’s recommendations.

D. Unit lengths must not be altered during installation except for the application of cold pull.

E. Remove shipping restraints after installation, but before hydrotesting. Test pressure shall not exceed 1.5 times design pressure. Water free of halogens shall be used for hydrotesting.

F. If testing medium is significantly heavier than the product to be carried in the system, care must be taken to support the additional weight.

G. Paints containing low melting point metals or their compounds, particularly aluminum, lead or zinc, must not be allowed to come into contact with the bellows convolutions.

END OF SECTION

05/03/13 PERMIT SET

SECTION 220529

HANGERS AND SUPPORTS FOR PLUMBING PIPING AND EQUIPMENT

PART 1 - GENERAL

1.1 WORK INCLUDED

A. The work of this Section shall include, but is not limited to, the following:
   1. Pipe and un-isolated equipment hangers, anchors and supports.
   2. Sleeves, escutcheons.
   3. Through-penetration firestopping in fire-rated construction and through-penetration smokestopping in smoke partitions, including methods and materials applied in penetrations and unprotected openings to limit spread of heat, fire, gasses and smoke.

1.2 RELATED DOCUMENTS

A. Section 22 05 01 - Plumbing General Provisions

B. Section 22 05 48 - Vibration Isolation and Seismic Restraints for Plumbing

C. Section 22 07 19 - Insulation for Plumbing

1.3 REFERENCE STANDARDS

Published specifications standards, tests or recommended methods of trade, industry or governmental organizations apply to work in this Section where cited below:

A. ANSI – American National Standards Institute
   1. ANSI/ASME B31.1 – 2007 Revised 2008: Power Piping

B. ASME – American Society of Mechanical Engineers
   1. ASME B16.19 – 2007: Factory-Made Wrought Butt-Welding Fittings

C. ASTM – American Society for Testing and Materials
   1. ASTM A 123 / A 123M – 2009: Standard Specification for Zinc (Hot-Dip Galvanized) Coatings on Iron and Steel Products
   2. ASTM B 695 – 2004: Standard Specification for Coatings of Zinc Mechanically Deposited on Iron and Steel
   3. ASTM C 1107 / C 1107M – 2008: Standard Specification for Packaged Dry, Hydraulic-Cement Grout (Nonshrink)
   4. ASTM E 814 – 1996 Revised 2009: Standard Test Method for Fire Tests of Penetration Firestop Systems

D. CIE/DIN Age Testing
   1. Commission Internationale de L'Éclairage (CIE)
      a. CIE 170-1:2006 – Fundamental Chromaticity Diagram with Physiological Axes
   2. Deutsches Institut für Normung (DIN)

E. ISO – International Organization for Standardization
   1. ISO 9001 – 2008: Quality Management System Requirements

F. MSS – Manufacturers Standardization Society of the Valve and Fittings Industry Inc.
   1. SP-58-2002: Pipe Hangers and Supports - Materials, Design and Manufacturer
   2. SP-69-2003: Pipe Hangers and Supports - Selection and Application
   3. SP-89-2003: Pipe Hangers and Supports - Fabrication and Installation Practices

G. UL – Underwriters Laboratories Inc.
   1. UL Standard 1479 – 2003 Revised 2008: Fire Tests of Through-Penetration Firestops
   2. UL Fire Resistance – 2009: Fire Resistance Directory set
      a. Through-penetration firestop devices (UL-XHCR)
      b. Fire resistance ratings (UL-BXUV)
      c. Through-penetration firestop systems (UL-XHEZ)
      d. Fill, void, or cavity material (UL-XHHW)
   3. UL Building Materials – 2009: Building Materials Directory
   4. UL Component Listing Test Criteria

05/03/13 PERMIT SET

5. Warnock Hersey Mark (Certification of Building Products)

H. California Building Code, 2010 edition

I. California Fire Code, 2010 edition

J. California Plumbing Code, 2010 edition

1.4 QUALITY ASSURANCE

A. Hangers and supports to be constructed and applied according to the following standards:
   1. Power Piping: ANSI/ASME B31.1.
   2. Firestopping materials shall have been tested to provide fire rating at least equal to that of the construction.
   3. Deliver products in original, unopened packaging with legible manufacturer's identification.
   4. Mechanical sleeve seals shall be manufactured in an ISO 9001:2008 certified facility.
   5. Submit written guarantee agreeing to repair or replace joint sealers which fail in joint adhesion, extrusion resistance, migration resistance, or general durability or appear to deteriorate in any other manner not clearly specified by submitted manufacturer's data as an inherent quality of the material for the exposure indicated. The guarantee period shall be one year from date of substantial completion.

1.5 SUBMITTALS

A. Include on piping shop drawings a layout of masonry and concrete floor and wall sleeve locations for pipes. Include elevations and sleeve sizes.

B. Submit product data on through-penetration firestop. Submittal data for firestopping systems shall include the UL System Numbers listed in the UL Building Materials Directory under which the material was tested in accordance with ASTM E 814 (UL 1479) for use in a Through-Penetration Firestop System. Where there is a firestop application that has not been tested by UL, obtain from the manufacturer an engineered judgment that the proposed application of the firestop product is suitable. Submit the engineered judgment to the Authority Having Jurisdiction.
   1. Product Data: Manufacturer's specifications and technical data including detailed specification of construction and fabrication, manufacturer's installation instructions and details of each proposed assembly identifying intended products and applicable UL system number or UL classified devices.
   2. Shop Drawings: Indicate dimensions, description of materials and finishes, general construction, specific modifications, component connections, anchorage methods, hardware, and installation procedures, plus the following specific requirements:
      a. Manufacturer or manufacturer's representative shall provide qualified engineering judgments and drawings relating to non-standard applications as needed.

C. Submit details of hangers, anchors and supports for each pipe size and service, and individual pieces of equipment.

D. Submit written guarantee as per sub-Clause 1.4, A.5.

PART 2 - PRODUCTS

2.1 ACCEPTABLE MANUFACTURERS

A. Pipe Hangers: Anvil, Fee & Mason, Elcen, Tube-Turn, F&S, Pipe Shields, B-Line Kindorf, Michigan Hanger, Power Strut, Unistrut, or approved equal. Anvil figure numbers are listed below; equivalent material by specified manufacturers is acceptable.

B. Sleeves: Pipe Shields, Insul, RK Industries

C. Pipe Wrap Tape: Polycen, Nassua, 3M

D. Firestop: Nelson, Dow, 3M, Hilti

E. Escutcheon Plates: Beaton & Corbin Manufacturing

2.2 GENERAL

A. Provide hangers of heavy construction suitable for the size of pipe to be supported. Materials shall be of steel, except pipe rolls of wrought or malleable iron.
   1. Hangers for pipes six-inches or less shall be swivel ring, wrought pipe clamp, or adjustable wrought clevis type. Anvil Figure 260, MSS-SP-69, Type 1.
   2. Hangers for ductile iron or cast iron pipes four-inches or less shall be swivel ring, wrought pipe clamp or adjustable wrought clevis type. Anvil Figure 590, MSS-SP-69, Type 1.
   3. Hangers for pipes eight-inches and above shall have two rods and cross-rod with cast iron pipe roll complete with adjustable sockets and nuts. Anvil Figure 177, MSS-SP-69, Type 41.
   4. When an oversized clevis type hanger is used (i.e., insulate pipe) a pipe spacer shall be placed over the clevis bolt as a spacer to assure that the lower U-strap will not move in on the bolt.

B. Multiple or trapeze pipe hangers shall be steel channels with welded spacers and hanger rods if hanger load calculations are submitted.

C. Wall support shall be welded steel bracket with hanger.

Light Duty Wall Support:	Anvil Figure 194, MSS-SP-69, Type 31.
Medium Duty Wall Support:	Anvil Figure 195, MSS-SP-69, Type 32.
Heavy Duty Wall Support:	Anvil Figure 199, MSS-SP-69, Type 33.

D. Metal Framing Channels:
   1. Provide perforated epoxy painted finish, 12-gauge minimum steel channels securely anchored to wall structure with interlocking, split type, bolt-secured, galvanized pipe/tubing clamps. B-Line type B22, S pattern with B-2000 series clamps, Power-Strut Type PS200 H with PS 1200 clamps or equal.
   2. When copper piping is being supported, provide flexible elastomeric/thermoplastic isolation cushion material to completely encircle the piping and avoid contact with the channel or clamp, equal to B-Line B1999 Vibra Cushion, or provide manufacturers clamp and cushion assemblies, B-Line BVT series, Power-Strut PS 004T – PS 106N Series or equal.

E. Support stationary vertical piping with carbon steel double bolt riser clamps attached to the pipe. Weld shear lugs to the pipe. In general, use one clamp for each two floors and one clamp at each floor for copper tubing. Where pipes are in open shafts, provide forged steel bar brackets fixed to wall. Riser clamps shall be copper plated when used with copper pipe. Locate riser clamp immediately under coupling or other fitting. Anvil Figure 261, MSS-SP-69, Type 8 for steel pipe; Anvil Figure CT121, MSS-SP-69, Type 8 for copper pipe.

F. Select hangers and supports in accordance with the manufacturer's recommended maximum loading. Hangers shall have a safety factor of 5 of 1.

G. Hangers shall not be disengaged by movement of supported pipe.

H. Provide copper-plated or felt-lined hangers for copper piping or provide 10-mil pipe wrap tape on pipe at hangers. Tape shall extend a minimum of 2 inches beyond hanger saddle on both ends and be wrapped around pipe a minimum of 2 turns. Install vinyl-coated hangers for all plastic piping.

I. Steel hanger rods shall be threaded both ends, threaded one end, or continuous threaded, black finish. Provide rods complete with adjusting and lock nuts. Anvil Figures 146, 140 or 253.

J. Pipe Support Recommendations for Rigid Grooved Joint Systems: The maximum hanger spacing in the specification to ANSI/ASME B31.1 as noted and should be used only in conjunction with Victaulic 07 zero-flex rigid couplings. For flexible systems the hanger, support, spacing and location refer to the pipe support recommendations section in the Victaulic "Field Assembly and Installation Pocket Handbook" or equivalent provided by Grooved Joint Manufacturer.

K. Beam Clamps:
   1. Provide MSS SP-69 Type 23 malleable black iron clamp for attachment to beam flange up to 0.62 inches thick for single threaded rods of 3/8-, 1/2-, and 5/8-inch diameter, for use with pipe sizes 4-inch and less. Furnish with a hardened steel cup point set screw. Anvil Figure 86.

2. Provide MSS SP-69 Type 28 or Type 29 forged steel jaw type clamp with a tie rod to lock clamp in place, suitable for rod sizes up to 1.5-inch diameter but limited in application to pipe sizes 8-inch and less without prior approval. Anvil Figure 228.

L. Continuous Concrete Insert Channels:
1. Provide steel inserts with industry standard pre-galvanized finish, nominally 1-5/8-inch wide by 1-3/8-inch deep by length to suit the application, designed to be nailed to concrete forms and provide a linear slot for attaching other support devices.
2. Installed channels shall provide a load rating of 2000 pounds per foot in concrete. Manufacturer's standard brackets, inserts, and accessories designed for use with continuous concrete inserts are acceptable.
3. Select insert length to accommodate all pipe and conduit in the area.

M. Anchors shall be fabricated using welding steel shapes, plates, and bars to secure piping to the structure.

N. Concrete inserts shall be MSS SP-69 Type 18 wedge type or universal concrete inserts.
1. Wedge type shall be constructed of a black carbon steel body with a removable malleable iron nut that accepts threaded rod to 7/8-inch diameter. Wedge design shall allow the insert to be held by concrete in compression to maximize the load carrying capacity. Anvil Figure 281.
2. Universal type shall be constructed of black malleable iron body with a removable malleable iron nut that accepts threaded rod to 7/8-inch diameter. Anvil Figure 282.
3. Use drilled steel shell with plug type inserts when the inserts are placed after the concrete is poured.

O. Drainage Piping: Provide MSS-SP-69 Type 8 or MSS-SP-69 Type 42 riser clamps for vertical piping, and MSS-SP-69 Type 52, spring hangers at the base of vertical piping.

2.3 SLEEVES

A. Construct sleeves for pipes passing through walls (other than foundation walls), floors, partitions, hung or furred ceilings, etc., of minimum 18-gauge galvanized steel, flanged on each side of wall, partition, hung or furred ceiling, etc.

B. Provide standard weight galvanized steel pipe sleeves with welded anchor flanges at foundation walls and reinforced concrete or masonry walls.

C. Provide cast iron or fabricated "wall pipe" equivalent to ductile-iron pressure pipe, with plain ends and integral waterstop, unless otherwise indicated.

D. Stack Sleeve Fittings: Provide manufactured, cast-iron sleeve with integral clamping flange. Include clamping ring, bolts, and nuts for membrane flashing and underdeck clamping ring with setscrews.

E. Install escutcheons at exposed piping through floors, ceilings, walls and partitions in finished areas, within cabinets and millwork, and piping through all fire-rated separations. Provide manufactured wall and ceiling escutcheons and floor plates, with an inside diameter to closely fit around pipe, tube, and insulation of insulated piping and an outside diameter that completely covers opening. Escutcheons shall be cast iron or cast brass, deep-pattern escutcheons if required to conceal protruding fittings, sleeve hubs or firestopping projections.

2.4 PENETRATION FIRESTOP

A. Fire-Rated Construction: Maintain barrier and structural floor fire resistance ratings including resistance to cold smoke at all penetrations, connections with other surfaces or types of construction, and sound or vibration absorption, and at other construction gaps.

B. Smoke Barrier Construction: Maintain barrier and structural floor resistance to cold smoke at all penetrations, connections with other surfaces and types of construction and at all separations required to permit building movement and sound or vibration absorption, and at other construction gaps.

C. Systems or devices listed in the UL Fire Resistance Directory under categories XHCR and XHEZ may be used, providing that it conforms to the construction type, penetrant type, annular space requirements and fire rating involved in each separate instance, and that the system be

symmetrical for wall applications. Systems or devices must be asbestos-free. Mortar systems must be Warnock Hersey approved.

D. Withstand the passage of cold smoke either as an inherent property of the system, or by the use of a separate product included as a part of the UL system or device, and designed to perform this function.

E. All firestopping products must be from a single manufacturer.

F. Through-penetration smokestopping at smoke partitions: Any system complying with the requirements for through-penetration firestopping in fire-rated construction, as specified, is acceptable, provided that the system includes the specified smoke seal or will provide a smoke seal. The length of time of the fire resistance may be disregarded in a non-fire rated smoke barrier.

G. Seal all pipe penetrations through fire-rated construction with factory-built devices or with manufactured fill, void, or cavity materials "Classified" by Underwriters Laboratories Inc. for use as a Through-Penetration Firestop. All firestop devices and systems shall be approved for such use by the Authority Having Jurisdiction. The firesafing system used shall maintain the fire-resistance rating of the building component that is penetrated.

H. All materials shall be non-hardening and non-toxic. The firesafing system used shall accommodate expansion and contraction of the floating plumbing piping systems without damaging the firestop or reducing its effectiveness as a smoke barrier or water seal.

2.5 GROUT

A. Grout shall be slow-hardening after application, volume-adjusting, non-staining, non-corrosive, non-gaseous, and recommended for interior and exterior applications.

B. Provide ASTM C 1107/C 1107M, Grade B, non-shrink and non-metallic, dry hydraulic-cement grout.

C. Design Mix: 5000 psi, 28-day compressive strength from a premixed and factory pre-package.

PART 3 - EXECUTION

3.1 HANGERS AND SUPPORTS

A. Deflection of pipes shall not exceed 1/240th (0.416 percent) of span. Support horizontal piping in accordance with the following schedule:

Pipe Size (inches)	Maximum Hanger Spacing (feet)								Hanger Rod Diameter (inches)		
	Steel	Cast Iron	Copper	Plastic					Steel / Cast Iron	Copper	Plastic
				CPVC	PVC	PP	PVDF	FG			
up to 1	7	–	5	3.5	3	2.75	2.5	10	3/8	3/8	3/8
1.25	9	–	7	3.5	3	2.75	3	10	3/8	3/8	3/8
1.5 & 2	9	5	8	3.5	3.5	2.75	3	10	3/8	3/8	3/8
2.5	12	5	9	3.5	3.5	3.5	3.5	10	0.5	0.5	0.5
3	12	5	10	3.5	3.5	3.5	3.5	10	0.5	0.5	0.5
3½	–	5	11	–	–	–	–	–	5/8	0.5	–
4	12	5	12	4	4	4	4	10	5/8	0.5	5/8

(C)PVC: (Chlorinated) Polyvinyl Chloride Plastic; PP: Polypropylene plastic; PVDF: Polyvinylidene Fluoride Plastic; FG: Fiberglass

B. Provide hangers at each change in direction and both sides of valves 4-inch and larger. Place a hanger within 12 inches of each horizontal elbow, valve, strainer, or similar piping specialty item. Provide hanger on both sides of "no-hub" mechanical joints.

C. Support hangers from concrete inserts or beam clamps. Furnish, locate and set inserts. Construct inserts of malleable iron or pressed steel with space for rods of all sizes. Install inserts for pipes 3 inches and larger in size with a reinforcing rod 5/8-inch in diameter run through a slot in the insert specifically provided for this purpose.

D. If piping is required in a space where no inserts have been provided, drill holes in the slab (subject to Structural Engineer's prior approval) and provide rods and hanger attached to an approved fishplate or install double expansion shields connected by a 2-inch by 2-inch angle, from which the hanger rod is to be suspended. For pipe size 2 inches and under use single shields but the hanger spacing shall be reduced to 5 feet. The carrying capacity and size of each shield shall be calculated on the basis of the spacing indicated above but the minimum size shall be 3/8-inch. Install additional shields of the same size so that the number of hangers is of adequate size to support the loads, which they carry. Shields may be used in concrete slabs only. Obtain from the expansion shield manufacturer an ICBO Evaluation Report for the product and submit to the Engineer.

E. Regardless of the type of construction (i.e., concrete, concrete-deck-steel or other variations) take particular care to support main lines and large and heavy pipes in an approved manner, including the provision of supplementary steel, if required. Supplementary steel shall be mill-rolled sections. Submit shop drawings, indicating support methods, point loadings to the building structure and hanger locations for review sufficiently in advance of concrete pouring schedules to permit evaluation, critique and any necessary changes to handling and support methods.

F. Hangers shall be directly bolted to steel beams of building construction, where they occur if approved by the Structural Engineer. Smaller pipes shall be suspended from crosspieces of pipe or steel angles, which in turn, are securely fastened to building beams or hung from building concrete construction by means of rods and inserts. The intention is to provide supports which shall be amply strong and rigid for the load, but which will not weaken or unduly stress the building construction.

G. Attachments to existing steel deck shall be limited to loads of 500 pounds. Heavier loads shall be supported by supplementary structural steel connected to structural beams. Provide all required supplementary steel.
   1. Attachments with loads up to 500 pounds shall be accomplished by drilled-in expansion shield type anchors located on the centerline of the concrete-filled ribs.
   2. No attachments shall be permitted to new or existing electrified decks. If hanger attachments are not existing, all new attachments shall be supported from supplementary steel.
   3. 500-pound load attachments shall be spaced not less than 60 inches apart, and shall be located as close to steel beams as possible.

H. Provide approved roller support, floor stands, wall brackets, etc., for lines running near the floor or near walls, which can be properly supported or suspended by the floors or walls. Pipelines near walls may also be hung by hangers carried from approved wall brackets at a higher level than the pipe.

I. Do not hang piping from supports for other services. Installed supports shall accommodate free expansion of the piping system.

J. Wherever hangers using pipe rolls are used, provide approved steel pipe covering protection saddles, spot-welded to the piping at each hanger location.

K. Anchor piping where shown to localize expansion or to prevent undue strain on piping and branches. Anchors shall be entirely separate from hangers and of heavy forged or welded construction of approved design. All anchor designs, when submitted for approval, shall include piping reactions which respective anchors are capable of supporting. Provide indicated expansion loop.

L. Install anchors where indicated on the drawings and details. Where not specifically indicated, install anchors at ends of principal pipe runs and at intermediate points in pipe runs between expansion loops. Make provisions for preset of anchors as required to accommodate both expansion and contraction of piping.

M. Support copper tubing individually by approved hangers not more than 6 feet apart. Hangers for uncovered lines shall be specially designed for copper tubing and of exact outside diameter of tubing. Hangers for covered tubing shall be broad straps fitting outside of covering.

N. Hangers for insulated piping shall support the pipe without piercing the insulation. Refer to Section 22 07 19 - Insulation for insulation protection shields and pipe inserts.

O. Use hangers, which are vertically adjustable 1.5-inch minimum after piping is erected. Install hangers so that 1/2-inch minimum clearance is maintained between finished covering of pipe and adjacent work.

P. Support riser piping independently of connected horizontal piping.

Q. Adjust hangers to obtain pipe slope where specified.

R. Where piping can be conveniently grouped to allow the use of trapeze type supports, use standard structural shapes or continuous insert channels for the supporting steel. Where continuous insert channels are used, pipe supporting devices made specifically for use with the channels may be substituted for the specified supporting devices provided that similar types are used and all data is submitted for prior review.

S. Perform all welding in accordance with standards of the American Welding Society. Clean surfaces of loose scale, rust, paint or other foreign matter and properly align before welding. Use wire brush on welds after welding. Welds shall show uniform section, smoothness of weld metal and freedom from porosity and clinkers. Where necessary to achieve smooth connections, joints shall be dressed smooth.

T. Factory coat supports and anchors used in corrosive atmospheres with hot dip galvanizing after fabrication, ASTM A 123/A 123M, 1.5-ounces/square foot of surface, each side. Mechanical galvanize threaded products, ASTM B 695 Class 150, 2.0 mil coating. Field cuts and damaged finishes shall be field-covered with zinc-rich paint of comparable thickness to factory coating. Corrosive atmospheres include the following locations:
   1. Exterior locations, parking ramps, carwash areas
   2. Swimming pool equipment, chemical storage or hazardous waste storage rooms
   3. Wet wells, meter pits
   4. Sanitary and storm sewer pumping stations
   5. Food service/kitchen areas, walk-in coolers/freezers
   6. Locker/shower rooms
   7. Greenhouses

3.2 SLEEVES

A. Provide sleeves for pipe passing through floors, walls or partitions, hung or furred ceilings, of sufficient diameter to accommodate pipe covering where such is required. Locate sleeves secure in place so that an equal space is around the pipe, after the pipe is installed.

B. For sleeves at penetrations of metal deck, nail, screw or weld to the deck prior to the pouring of the deck concrete. Set sleeves in such a manner so that no concrete fills their interior during the concrete pouring and finishing operations.

C. For exposed pipes, caulk floor sleeves with firestop material watertight and project sleeve approximately 2 inches above the finished floor. Finish sleeves with specified flanges flush with the bottom of slab and also with the finished faces of wall.

D. Provide sleeves with an inside diameter at least 1/2-inch greater than outside of pipe served, including pipe insulation which must be continuous through sleeve.

E. Where piping penetrates walls (other than foundation walls), partitions, floor slabs, etc., pack space between piping and sleeve with mineral wool (for depth of sleeve), or firestop material.

F. Do not support pipes by resting clamps on sleeves. Clamps shall extend beyond sleeve and be supported outboard of sleeve in an approved manner. In no case shall sleeves be cut or slotted to accommodate pipe clamps.

G. Provide escutcheon plates of the proper size for piping in sleeves passing through floors, walls, soffits, furrings, partitions, hung ceilings, etc., throughout the building where exposed. Exposed escutcheons shall be cast brass chromium plated, bell type, with setscrews of sufficient diameter

to include any required pipe insulation. Attach escutcheon to building material, not to pipe. Do not penetrate vapor barriers.

1. Split-casting, deep-pattern type cast-brass type with concealed hinge and set screw with polished chrome-plated and rough brass finish.
2. Split-casting, floor-plate type cast brass with concealed hinge and set screw.

3.3 FIRESTOPPING

A. Where space for future pipes and conduits is required, provide sleeves and fill with lightweight concrete or firestop.

B. Provide firestopping and grouting around pipes penetrating concrete slabs, concrete walls and masonry walls with cement grout in the sleeved opening extending full depth through wall or floor slab. Provide sheet metal cover over the insulation before applying grout. Around pipes through fire rated gypsum board construction, pack the annular space between the wall sleeve and the insulation sheet metal cover with noncombustible approved firestop material and finish with escutcheons on pipe where exposed. Attach escutcheons to wall.

C. Verify existing conditions and substrates before starting work. Correct unsatisfactory conditions before proceeding. Proceed with installation only after penetrations of the substrate and supporting brackets have been installed.

D. Environmental Requirements:
   1. Provide adequate ventilation if using solvent.
   2. Provide forced-air ventilation during installation if required by manufacturer.
   3. Keep flammable materials away from sparks or flame.
   4. Provide masking and drop cloths to prevent contamination of adjacent surfaces by firestopping materials.
   5. Comply with manufacturing recommendations for temperature and humidity conditions before, during and after installation of firestopping.

E. Clean surfaces that will be in contact with penetration seal materials of dirt, grease, oil, loose materials, rust, or other substances that may affect proper fitting, adhesion, or the required fire resistance.

F. Install penetration seal materials in accordance with the UL Fire Resistance Directory or Mortars per Warnock Hersey approval and in accordance with manufacturer's instruction.

G. Seal holes or voids made by penetrations to ensure an effective smoke barrier.

H. Where large openings are created in walls or floors to permit installation of pipes or other items, close unused portions of opening with firestopping material tested for the application. See UL Fire Resistance Directory or Warnock Hersey approvals.

I. Install smokestopping as specified for firestopping.

3.4 GROUTING

A. Mix, install and cure grout for plumbing equipment base bearing surfaces, pump and other equipment base plates, and anchors.

B. Clean surfaces that will come into contact with grout. Provide forms as required for placement of grout. Avoid air entrapment during placement of grout.

C. Place grout, completely filling equipment bases.

D. Place grout on concrete bases and provide smooth bearing surface for equipment.

E. Place grout around anchors.

END OF SECTION

SECTION 220548

VIBRATION ISOLATION AND SEISMIC RESTRAINTS FOR PLUMBING

PART 1 - GENERAL

1.1 WORK INCLUDED

A. The work of this Section shall include, but is not limited to, the following:
   1. Vibration isolation elements for plumbing piping and rotating equipment
   2. Equipment isolation bases
   3. Flexible connectors
   4. Seismic restraints for isolated and non-isolated equipment and piping
   5. Supervision and inspection of installed vibration isolators, seismic restraints, anchorage and associated hardware

1.2 RELATED DOCUMENTS

A. Section 22 05 01 – Plumbing General Provisions

B. Section 22 05 29 – Supports, Hangers, Anchors and Sleeves for Plumbing

C. Section 22 11 10 – Piping and Accessories

D. Division 26 – Electrical Specifications

1.3 REFERENCE STANDARDS

Published specifications standards, tests or recommended methods of trade, industry or governmental organizations apply to work in this Section where cited below:

A. ASCE – American Society of Civil Engineers
   1. ASCE 7-05, 2006 Revised 2007 – Minimum Design Loads for Buildings and Other Structures

B. Federal Specifications
   1. MIL-DTL-83420 (2005) – Wire Rope, Flexible, for Aircraft Control

C. IBC – International Building Code (2006)

D. OHSPD – Office of Statewide Health Planning and Development
(California Health and Human Services Agency)

E. CBC – California Building Code: Title 24 Building Standards

F. California Fire Code

1.4 QUALITY ASSURANCE

A. Provide control of excessive noise and vibration in the buildings due to the operation of machinery or equipment, and/or due to interconnected piping or conduit. Install vibration isolation units and associated hangers and bases under the direct supervision of the vibration isolation manufacturer's engineer.
   1. Vibration isolators shall have either known undeflected heights or calibration markings so that after adjustment, when carrying their load, the deflection under load can be verified, thus determining that the load is within the proper range of the device and that the correct degree of vibration isolation is being provided according to the design.
   2. Isolators shall operate in the linear portion of their load versus deflection curve. Furnish load versus deflection curves that are linear over a deflection range of not less than 50 percent greater than the design deflection.
   3. The ratio of lateral to vertical stiffness shall be neither less than 0.9 nor greater than 1.5.
   4. The theoretical vertical natural frequency for each support point, based upon load per isolator and isolator stiffness shall not differ from the design objectives for the equipment as a whole by more than plus or minus 10 percent.
   5. All neoprene mountings and components shall be oil resistant and have:
      a. Shore durometer hardness of 40 to 65, after minimum aging of 20 days or corresponding oven-aging

05/03/13 PERMIT SET

b. Minimum tensile strength of 2000 pounds per square inch
c. Minimum elongation of 300 percent
d. Maximum compression set at 25 percent

B. Mounting systems or components shall not be resonant with any of the supported equipment forcing frequencies.

C. Isolators shall be selected on the basis of the static and dynamic loads actually supported. Dynamic loads include those due to: wind, fluid flow, thrust and rotational inertia. Select each isolator independently for proper load distribution on each piece of equipment and pipe support, or base.

D. Vibration isolation hardware shall not be concealed until reviewed by the Engineer.

E. Verify specified clearances, plumb installation of hanger rods and lack of interference – no contact permitted with gypsum board, framing, ceiling wires, light fixtures, conduit, ducts and piping.

F. Verify that the space below inertia bases is clean and clear of construction debris and obstructions.

G. Verify proper vibration isolator loading and deflection.

H. Vibration isolation field inspection engineer shall provide a punchlist report for the Engineer's review.

I. Vibration isolation and seismic restraint field inspection engineer shall submit a close-out letter stating that the installation is complete and meets the requirements of the specification and the manufacturer's installation instructions, and all deficiencies noted have been corrected.

1.5 SUBMITTALS

A. Manufacturer's Data:
1. Catalog cuts and data sheets on specific vibration isolators to be utilized showing compliance with the specifications.
2. An itemized list showing the items of equipment and piping to be isolated, the isolator type and model number selected, isolator loading and deflection, and reference to specific drawings.
3. Written approval of the base design shall be obtained from the equipment manufacturer.

B. Shop Drawings: Concrete reinforcing details and templates for all foundations, bases, supports, inertia blocks, hanger bolts, etc.; support frame details, pipe support details; vibration isolation mountings for equipment and piping including equipment weight, center of gravity and operating speed, location and installation details. Include in the vibration isolation equipment submittal drawing the following information based on equipment submittals released for construction:
1. Isolation mounting deflections.
2. Spring diameters, compressed spring heights at rated load and solid spring heights where steel spring isolation mountings are used.
3. Equipment operating speed.
4. Seismic restraint calculations stamped by a California State licensed structural or civil engineer, confirming compliance with ASCE 7-05.
5. Note compliance with seismic code regulations and the project specification on the submittals.
6. Number and location of seismic restraints and anchors for each piece of equipment including but not limited to vertical pipe risers, bolt sizing and embedment depth, and seismic cable strength and diameters.
7. Specific details of restraints including anchor bolts for mounting and maximum loading at each location.
8. Drawings showing methods of suspension, support guides for piping and suspended equipment.
9. Drawings showing methods of isolation of pipes piercing walls and floor slabs.
10. Provide installation instructions, drawings and field supervision to assure proper installation and performance.
11. Certificate of compliance for each component mounting system and anchorage as required by [IBC] [CBC] Section 1708.5.

12. Written statement of responsibility as required by [IBC] [CBC] Section 1706.

C. Submit close-out letter and report as described in Clauses 1.04, I. and 3.06, A.

D. Submit seismic restraint calculations as described in Clause 2.06, A.

1.6 MANUFACTURER RESPONSIBILITIES

A. Manufacturer of vibration isolation equipment shall have the following responsibilities:
1. Determine vibration isolation and seismic restraint sizes and required locations.
2. Provide piping and equipment isolation systems and seismic restraints as scheduled or specified.
3. Guarantee specified isolation system deflection.
4. Provide installation instructions, drawings and field supervision to assure proper installation and performance.
5. Seismic restraints and anchorage shall be designed for the lateral and vertical forces required by the Building Code for the specific project type and site. Confirm lateral and vertical forces and site-specific design criteria with the project Structural Engineer.
6. Written statement of responsibility for the seismic restraint system as required by [IBC] [CBC] Section 1706.

1.7 DEFINITIONS

A. Life Safety Systems:
1. All plumbing components involved with fire protection including service water supply piping, water tanks, etc. Life safety system restraints shall be designed with an Importance Factor of 1.5.
2. All medical and life support systems. Importance Factor 1.5.

B. Positive Attachment:
1. A positive attachment is defined as a cast-in anchor, a drill-in wedge anchor, a double-sided beam clamp loaded perpendicular to a beam, or a welded or bolted connection to structure. Single sided “C” type beam clamps for support rods of overhead piping, components involved with fire protection or any other equipment are not acceptable as seismic anchor points.

PART 2 - PRODUCTS

2.1 ACCEPTABLE MANUFACTURERS

A. Vibration Isolation: Mason Industries (MII), Vibration Mountings & Control (VMC), Amber-Booth (AB), Vibration Eliminator (VEC), Kinetics Noise Control (KNC), Caldyn

B. Piping Seismic Bracing: Kin-Line, Super Strut, Mason Industries

2.2 MATERIALS

A. All vibration isolation devices shall be the products of a single manufacturer.

B. Where exposed to the atmosphere, all steel shall be hot-dipped galvanized; hardware shall be cadmium plated; springs shall be powder coated.

2.3 VIBRATION ISOLATORS

A. Refer to these specifications and drawings for vibration isolator types to be used:
1. Type “A” spring isolators shall incorporate the following:
   a. Minimum diameter of 0.8 of the loaded operating height and horizontal spring stiffness 1.1 times rated vertical spring stiffness.
   b. Reserve deflection, from loaded to solid height, of 50 percent of rated deflection with leveling device.
   c. Minimum 1/2-inch thick neoprene acoustical base pad on underside, unless designated otherwise. Neoprene elements shall be as specified.

d. Designed and installed so that ends of springs remain parallel.
Type SLF ..... MII
Type OSK ..... VEC
Type RMS ..... VMC
Type FDS ..... KNC

2. Type “B” spring isolators shall be similar to Type “A”, except inherently restrained:
   a. Provide built-in resilient vertical limit stops with neoprene grommets.
   b. Tapped holes in base plate for bolting isolator to base, housekeeping pad or structural support. Tapped holes in top plate for bolting to equipment.
   c. Capable of supporting equipment at fixed elevation during equipment erection.
   Type SLR Series 100 ..... MII
   Type KW ..... VEC
   Type RMSL-EQ ..... VMC
   Type FLS ..... KNC
3. Type “C” spring hanger rod isolators shall incorporate the following:
   a. Spring element seated on a steel washer in series with a deflected neoprene element as specified.
   b. Steel retainer box encasing the spring and neoprene washer. Ensure no metal-to-metal contact.
   c. Minimum 1/2-inch clearance between retainer box and spring hanger rod. Provide neoprene grommet.
   d. Maximum 30-degree allowable rod misalignment from centerline axis.
   Type 30N ..... MII
   Type SNCR ..... VEC
   Type RSH-30A ..... VMC
   Type SRH ..... KNC
4. Type “C1” pre-compressed spring hanger rod isolators shall incorporate the following:
   a. Spring element seated on a steel washer in series with a deflected neoprene element as specified.
   b. Steel retainer box encasing the spring and neoprene washer. Ensure no metal-to-metal contact.
   c. Minimum 1/2-inch clearance between retainer box and spring hanger rod. Provide neoprene grommet.
   d. Where operating weight differs from installed weight provide built-in adjustable limit stops to prevent equipment rising when weight is removed. Stops shall not be in contact during normal operation. Clearly indicate deflection with scale on isolator.
   e. Maximum 30-degree allowable rod misalignment from centerline axis.
   Type PC30N ..... MII
   Type SNCR ..... VEC
   Type RSH-30A ..... VMC
   Type SRH ..... KNC
5. Type “D” elastomer inherently restrained isolators shall incorporate the following:
   a. Bolt holes for bolting to equipment base.
   b. Bottom steel plates for bolting to sub-base as required.
   c. Molded unit type neoprene element as specified.
   Type BR ..... MII
   Type 368 SD ..... VEC
   Type FUD-EQ ..... VMC
   Type RD ..... KNC
6. Type “E” elastomer hanger rod isolators shall incorporate the following:
   a. Molded unit type neoprene element as specified.
   b. Steel retainer box encasing neoprene mounting.
   c. Clearance between mounting hanger rod and steel retainer box. Provide neoprene grommet.
   Type HD ..... MII
   Type CD ..... VEC
   Type HSS ..... VMC

Type RH .....KNC

7. Type "F" pad type elastomer mountings shall incorporate the following:
   a. 3/4-inch minimum thickness neoprene elements as specified. Verify thickness will not degrade or derate the isolator performance.
   b. Sized for 50 pounds per square inch maximum loading. Provide suitable bearing plate to distribute load.
   c. Ribbed or waffled design.
   d. 1/6-inch deflection per pad thickness.
   e. 16 gauge galvanized steel plate between multiple layers of pad thickness.
      Type Super WMSW ..... MII
      Type 200N.....VEC
      Type Iso-Cube..... VMC
      Type NP .....KNC
8. Type "G" pad type elastomer mountings shall incorporate the following:
   a. Neoprene impregnated canvas duck material.
   b. Maximum loading 1000 pounds per square inch. Provide suitable bearing plate to distribute load.
   c. Minimum thickness, 2-inch.
      Type HL..... MII
      Type Fabriflex ..... VMC

2.4 EQUIPMENT BASES

A. Concrete Inertia Base, Type "B-1":
   1. Concrete inertia bases shall be formed in a structural steel perimeter base, reinforced as required to prevent flexure, misalignment of drive and driven unit or stress transferal into equipment. The base shall be complete with pump or piping base elbow support anchors and complete with height-saving brackets, reinforcing, equipment-bolting provisions.
   2. Each pump with its driving motor shall be bolted and grouted to a spring-supported concrete inertia base reinforced as required. Provide a minimum of four spring vibration isolators as specified and/or shown on the Drawings.
   3. Each rectangular concrete base shall include supports and base elbows for pump suction and discharge connections. Base elbows shall be bolted and grouted to the concrete foundation.
   4. The suction and discharge pipe elbows of horizontal and/or vertical inline pumps shall be provided with welded vertical support stanchions of adequate strength and rigidity. These support stanchions along with the pump supports shall be bolted and grouted to a concrete inertia base, which in turn shall be supported on steel spring isolators. A minimum operating clearance of 2 inches shall exist between the inertia base and the housekeeping pad.
   5. Minimum thickness of the inertia base shall be as follows:

Motor Size (Horsepower)	Minimum Thickness (Inches)
5-15	6
20-50	8
60-75	10
100-250	12

Type K or BMK..... MII
Type CIB .....KNC

2.5 FLEXIBLE PIPING CONNECTORS

A. Neoprene Type "FC-1":
   1. Manufactured of kevlar tire cord and neoprene molded and cured with hydraulic presses.
   2. Straight connectors shall have two spheres.
   3. Elbow shall have single sphere forming the corner of joint.
   4. Rated 150 pounds per square inch at 220 degrees F.
      Type Safeflex SFDEJ, SFDCR ..... MII

B. Flexible Stainless Hose, Type “FC-2”:
   1. Braided flexible metal hose.
   2. 2-inch pipe size and smaller with male nipple fittings.
   3. 2.5-inch and larger pipe size with fixed steel flanges.
   4. Suitable for operating pressure and temperature with 4:1 minimum safety factor.
   5. Length as specified on the Drawings.
      Type BSS ..... MII
      Type MFP ..... VMC

2.6 SEISMIC RESTRAINTS

A. General:
   1. Provide restraints capable of safely accepting forces specified in PART 1 of this Section, without failure, to maintain equipment and piping in a captive position. Restraints must not short circuit vibration isolation systems or transmit objectionable vibration or noise. Submit calculations by a structural or civil engineer licensed and registered in the State of the Project to verify seismic restraint and cable capacities.
      a. Seismic Restraint, Type I: All directional seismic snubbers shall consist of interlocking steel members restrained by molded neoprene bushing compounded to bridge bearing specifications. Bushing shall be replaceable and a minimum of 1/4-inch thick. Rated loadings shall not exceed 1000 psi. Snubbers shall be manufactured with an air gap between hard and resilient material of not less than 1/8 inch or more than 1/4 inch. Snubbers shall be installed with factory set clearances. The capacity of the seismic snubber at 3/8-inch deflection shall be equal or greater than the load assigned to the mounting grouping controlled by the snubber multiplied by the applicable “G” force. Submittals shall include the load deflection curves up to 1/2-inch deflection in the X-, Y- and Z-planes.
         Type Z-1225-1 ..... MII
      b. Seismic Restraint, Type II: Cable type with approved end fastening devices (minimum of two per end) to equipment and structure. Cable to comply with Federal Specification MIL-DTL-83420 military grade 7 by 19 galvanized steel.
         Type SCBH ..... MII
      c. Seismic Restraint, Type III: Seismic solid braces shall consist of steel angles or channels to resist seismic loads with a minimum safety factor of 2 and arranged to provide all directional restraint. Seismic solid brace end connectors shall be steel assemblies that swivel to the final installation angle and utilize two through bolts to provide proper attachment.
         Type SSBS ..... MII

PART 3 - EXECUTION

3.1 GENERAL

A. Install in accordance with manufacturer’s recommendations and written instructions. Vibration isolators must not cause any change of position of equipment or piping resulting in piping stresses or misalignment.

B. Isolate plumbing equipment from the building structure by means of vibration isolators as specified and scheduled on the Drawings.

C. Vibration isolated piping shall pass freely through walls and floors without rigid connections. Maintain 3/4-inch to 1.25-inch concentric clearance around outside surfaces of piping at penetration points. Pack this clearance space tightly with fiberglass, and caulk airtight after installation of piping, or provide resilient firestopping as required. Provide supports 6 to 8 inches from walls or partitions on both sides of penetrations.

D. Do not make rigid connections between equipment and building structure that degrades or short circuits the vibration isolation system specified herein.

E. Loop electrical circuit connections to isolated equipment to allow free motion. Include at least one slack 90-degree bend.

F. Bring to the Engineer's attention prior to installation any conflicts with other trades, which will result in unavoidable rigid contact with equipment or piping as, described herein, due to inadequate space or other unforeseen conditions. Corrective work necessitated by conflicts after installation will be at the Contractor's expense.

G. Support vertical piping loads, including water strainers, and valves between pump base elbow supports and the suction and discharge header piping by means of the pump base spring isolators without stress or strain to the pump housing.

H. Provide a flanged steel pipe spool piece between suction and discharge valves and pumps to permit future installation of flexible connectors.

I. Level vibration isolated equipment under rated design operating conditions while maintaining the isolation criteria. Isolators shall be plumb and aligned during operation.

3.2 EQUIPMENT ISOLATORS

A. Mount vibration isolating devices and related inertia blocks on concrete housekeeping pads.

B. Support each pump and motor assembly on a single structural steel frame.

C. If the equipment to be mounted is not furnished with integral structural frames and external mounting lugs (both of suitable strength and rigidity), install approved structural sub-base in the field which will support the equipment to be hung and to which will be attached the hangers.

D. Additional Requirements:
   1. Provide brackets to accommodate the isolator. Manufacturer shall indicate bolt hole sizes and locations, welds required, and specify the vertical position and size of the bracket.
   2. Maintain a minimum operating balance between the equipment frame on rigid steel base frame and the concrete housekeeping pad of 1 inch. Maintain a minimum operating clearance between concrete inertia and base and concrete housekeeping pad or floor of 2 inches.
   3. Temporarily support the structural steel or concrete inertia base with blocks or shims, as appropriate, prior to the installation of the equipment or isolators.
   4. Install the isolators without raising the equipment and frame assembly.
   5. Adjust the isolators after the entire installation is complete and under full operational load so that the load is transferred from the blocks to the isolator. When all isolators are properly adjusted, the blocks or shims will be barely free and shall be removed.
   6. Verify that all insulated isolator and mounting systems permit equipment motion in all directions. Adjust or provide additional resilient restraints to flexibly limit equipment start-up lateral motion to 1/2-inch.
   7. Prior to start-up, clean out all foreign matter between bases and equipment and under inertia bases. Verify that there are no isolation short circuits in the base or isolators.

3.3 AIR COMPRESSORS

A. Mount air compressors on Type "B-1" concrete inertia base.

B. Provide Type "A" open spring vibration isolators between base and concrete housekeeping pad.

C. Provide Type "FC-2" flexible hose at discharge connections of each compressor. Use two straight lengths with a 90-degree pipe elbow between each to provide flexibility in all directions.

3.4 PIPING ISOLATORS

A. Isolate all domestic water and steam piping as follows:
   1. Piping in mechanical rooms, fan rooms, plumbing equipment rooms or boiler rooms.
   2. Piping within 50 feet (or 100 diameters if greater) from connected rotating equipment and pressure-reducing stations.
   3. All domestic water piping with a diameter less than 4" does not require vibration isolation unless specified in the following clauses.

B. Install isolators with the isolator hanger box attached to, or hung as close as possible to, but not contacting, the structure. Provide outrigger supports where required for clearance to equipment and to maintain minimum clearance of equipment to structure above.

C. Suspend isolators from substantial structural members, not from slab unless specifically permitted. Attachments to fireproofed structural members shall be re-fireproofed as required.

D. Align hanger rods to clear the hanger box. Replace bent rods.

E. Support pipe for the first three pipe hangers from any rotating equipment with isolator Type “C1” with a minimum 1.5-inch static deflection.

F. Support pipe larger than 4 inches by isolator Type “C” with a minimum 1.0-inch static deflection.

G. Domestic water piping, one-inch diameter and less, shall be isolated using Acousto-Plumb mounts or equal resilient attachments or shall be provided with thermal insulation with shields at support points.

H. Sanitary drain or storm drain piping passing above the following list of rooms or spaces shall be attached and supported using Type “C” spring hangers for horizontal piping and in vertical piping Type “D” isolators underneath the supporting clamps. Provide Type “F” resilient pads under pipe elbows supported from the floor.
Spaces requiring isolation: Judges Chambers, Courtrooms, Meeting Rooms, Training Spaces

I. All other grouped pipes shall be isolated by using Type “C” vibration isolators supporting trapeze hangers and selected to provide a static deflection of 1.0 inches. Grouped floor-supported pipes shall be isolated using Type “D” isolators selected to provide a static deflection of 0.15 inches.

J. Mount floor-supported horizontal pipe at slab using Type “A” isolator with a minimum static deflection of 1-inch or same deflection as isolated equipment to which pipe connects, whichever is greater.

K. Mount all isolators between building structure and supplementary steel.

L. Suspend isolators from rigid and massive support points.

M. Supplementary steel to be sized for a maximum deflection of 0.08 inches at center of span.

N. Support water piping not subject to thermal expansion with riser floor supports with Type “F” isolators (2 layers).

O. Vibration isolation components shall not be used to correct misaligned sections of pipe.

P. Vertical piping subject to thermal expansion shall have pipe riser guides, anchors and supports located so that there will be no direct metal contact of the piping with the building structure.
   1. Weld steel guide bars to the pipe at a maximum spacing of 60 feet. The outside diameter of the opposing guide bars shall be smaller than the inside diameter of the pipe riser clamp in accordance with standard field construction practice. Each end of the pipe riser clamp shall be rigidly attached to an all-directional pipe anchor isolation mounting, which in turn shall be rigidly fastened to the supplementary steel framing within the shaft.
   2. The all-directional pipe anchor shall consist of a telescoping arrangement of 2 sizes of steel tubing separated by a minimum of 1/2-inch thick heavy duty neoprene and canvas duck isolation pad. Provide vertical restraints by similar material arranged to prevent vertical travel in either direction. The allowable load on the isolation material shall not exceed 500 pounds per square inch. Anchors shall be Mason Industries Type ADA or equal.
   3. Construct piping guides for insulated piping with a 10-gauge metal sleeve around the piping. Provide the thermal insulation requirements for the piping between the piping and the sleeve. The metal sleeve outside diameter shall be smaller than the pipe riser clamp inside diameter. The pipe riser clamp shall be rigidly attached to the pipe guide, which shall be rigidly attached to the steel framing within the shaft. Guides shall be Mason Industries Type VSG or equal.
   4. The pipe anchor mountings shall be capable of safely supporting loads, expansion, and thrusts developed by the installed piping.

Q. Provide flexible piping connections for connections to rotating equipment as specified and where shown on the Drawings.

R. Provide flexible piping connections and four-elbow offsets for all piping that crosses building seismic or expansion joints unless more stringent flexible all-directional joints have been specified elsewhere.

3.5 SEISMIC RESTRAINTS

A. General:
1. Cable restraints shall be installed slightly slack to avoid short circuiting the isolated suspended equipment, piping. Cable restraints shall be installed taut on non-isolated systems. Seismic solid brace restraints may be used in lieu of cables on non-isolated rigidly attached systems only.
2. Where cable or solid brace restraints are located, the equipment or piping support rods shall be angle braced for compression loads.
3. At all locations where cable or solid brace restraints are attached to pipe clevises, the clevis cross bolt shall be reinforced with cross braces.
4. Provide drill-in concrete anchors for ceiling and wall installation and female wedge type for floor-mounted equipment.

B. Seismic Restraint of Piping:
1. Transverse piping restraints shall be at 40-foot maximum spacing for all pipe sizes, except where lesser spacing is required to limit anchorage loads.
2. Longitudinal restraints shall be at 80-foot maximum spacing for all pipe sizes, except where lesser spacing is required to limit anchorage loads.
3. Where thermal expansion is a consideration, guides and anchors may be used as transverse and longitudinal restraints provided they have a capacity equal to or greater than the restraint loads in addition to the loads induced by expansion or contraction.
4. For fuel oil and all gas piping, transverse restraints must be at 20-foot maximum and longitudinal restraints at 40-foot maximum spacing.
5. Transverse restraint for one pipe section may also act as a longitudinal restraint for a pipe section of the same size connected perpendicular to it if the restraint is installed within 24 inches of the elbow or tee or combined stresses are within allowable limits at longer distances.
6. Hold-down clamps must be used to attach pipe to all trapeze members before applying restraints in a manner similar to clevis supports.
7. Branch lines may not be used to restrain main lines.
8. Cast iron pipe of all types, glass pipe and any other pipes joined with a four band shield and clamp assembly shall be seismically restrained at not more than one-half the spacing in Clauses 3.05.B.2 and 3.05.B.3 above. Additional transverse and longitudinal restraint shall be provided on both sides of each change in direction of 90 degrees or more.

C. Seismic Restraint of Equipment:
1. All plumbing equipment shall be vibration isolated and seismically restrained as scheduled using either inherently restrained vibration isolators or separate all-directional seismic snubbers as specified. Suspended equipment shall be restrained by cable restraints.

D. Seismic Restraint Exclusions:
1. Piping:
   a. Gas piping less than 1-inch inside diameter.
   b. Piping in boiler and mechanical rooms less than 1.25-inch inside diameter.
   c. All other piping less than 2.5-inch inside diameter.
   d. All piping suspended by individual hangers 12 inches or less as measured from the top of the pipe to the bottom of the support where the hanger is attached. However, if the 12-inch limit is exceeded by any hanger in the run, seismic bracing is required for the run.
   e. The 12-inch exemption applies for trapeze supported systems if the top of each item supported by the trapeze qualifies.

3.6 INSPECTION

A. On completion of installation of all vibration isolation devices specified herein, the local representative of the isolation manufacturer, the manufacturer's engineer shall inspect the completed system and submit a report to the Engineer indicating the adequacy of the installation and listing any corrective action required.

B. Replace any component found to be visibly deflected with more substantial components.

C. Unless otherwise scheduled on the Drawings provide the following Equipment Vibration Isolation and Seismic Restraints:

Equipment	Deflection (Inches)	Isolator Type	Restraint Type
Base-mounted pumps – inertia base required	2.0	"A"	I
Other small pumps and motor driven equipment	0.35	"C1"	II
Wall- or floor-mounted pressure reducing stations and VFD's	0.25	"G"	–

END OF SECTION

05/03/13 PERMIT SET

SECTION 220550

ACCESS DOORS IN GENERAL CONSTRUCTION FOR PLUMBING

PART 1 - GENERAL

1.1 WORK INCLUDED

A. The work of this Section shall include, but is not limited to, the following:
   1. Furnishing access doors for installation in general construction and color-coded identification dots.

1.2 RELATED DOCUMENTS

A. Section 22 05 01 – Plumbing General Provisions

B. Section 22 05 53 – Systems Identification for Plumbing

1.3 REFERENCE STANDARDS

A. ASME – American Society of Mechanical Engineers
   1. ASME A13.1 – 2007: Scheme for the Identification of Piping Systems

B. ASTM – American Society for Testing and Materials
   1. ASTM A 167: Standard Specification for Stainless and Heat-Resisting Chromium-Nickel Steel Plate, Sheet and Strip
   2. ASTM A 1008: Standard Specification for Steel, Sheet, Cold-Rolled, Carbon, Structural, High-Strength Low-Alloy

C. NAAMM – National Association of Architectural Metal Manufacturers
   1. AMP 500-06 – Metal Finishes Manual for Architectural and Metal Products

D. UL – Underwriters Laboratories Inc.
   1. UL Fire Resistance – 2009: Fire Resistance Directory set

1.4 QUALITY ASSURANCE

A. Single-Source Responsibility: Obtain doors for the entire project from a single manufacturer.

B. Fire-Resistive Rating: Wherever access doors are required in construction where a fire-resistive classification is indicated, on the Architectural documents, provide access door assembly with panel door, frame, hinge and latch from manufacturer listed in Underwriters Laboratories Inc.'s "Building Materials Directory" for required rating.
   1. Provide UL Label on each fire-rated access door.

C. Furnish inserts and anchoring devices that must be built into other work for installation of access doors.

1.5 SUBMITTALS

A. Shop Drawings: Submit access door locations superimposed on piping layout shop drawings. Submit manufacturer's data on access doors including size and type.

PART 2 - PRODUCTS

2.1 ACCEPTABLE MANUFACTURERS

A. Access Doors: Milcor Inc., Karp Associates, Inc., J.L. Industries, Acudor, Williams Brothers

B. Color-Coded Identification Buttons: Brady/Seton, Stranco

2.2 ACCESS DOOR CONSTRUCTION

A. Provide recessed type as required to accept matching ceiling tile or drywall, etc.

B. Provide UL-rated doors for fire-rated construction.

C. Provide flush type steel framed panel with concealed continuous piano hinges for masonry or concrete construction. Provide textured frame for drywall construction.

05/03/13 PERMIT SET

D. Provide cam type locking device. Provide cylinder lock type access doors located in public corridors and washrooms complete with master keys.

E. Provide insulated doors in insulated or acoustically rated construction.

F. Furnish access doors of proper size for access to concealed equipment. Unless otherwise indicated, minimum size to be 12-inch by 12-inch for hand access and minimum 18-inch by 18-inch for valve and actuator access and 24-inch by 24-inch for equipment access. The following schedule is based on Karp Associates Inc.:
   1. Rated Construction: Fire-rated access door UL “B” Label Model KRP
   2. Non-Rated Dry Wall Construction: Model KDW
   3. Non-Rated Masonry, Concrete: Model DSC 214-M
   4. Non-Rated Ceramic Tile, Stainless Steel, Satin Finish: Model DSC 214-M
   5. Non-Rated Plaster Wall: Model DSC 214-PL
   6. Non-Rated Plaster Ceilings: Model DSC 210-PL

G. Provide color-coded dots on access doors and accessible ceiling tiles to indicate type of service.

PART 3 - EXECUTION

3.1 GENERAL

A. Coordinate location of access doors in hung ceilings, furred spaces, walls, etc., to provide access to concealed work items requiring maintenance and/or adjustment. Obtain approval of the Engineer for the locations of such access doors.

B. Locate and group equipment requiring access doors. Coordinate location of equipment with other trades to minimize number of access doors in one area.

C. Provide access doors for maintenance or adjustment purposes for plumbing system components, including but not limited to the following:
   1. Valves
   2. Concealed equipment

D. Access doors shall be marked by small color markings at corner of tile or door in accordance with the following color assignments:
   Plumbing – Silver

END OF SECTION

05/03/13 PERMIT SET

SECTION 220553

SYSTEMS IDENTIFICATION FOR PLUMBING

PART 1 - GENERAL

1.1 WORK INCLUDED

A. The work of this Section shall include, but is not limited to, the following:
   1. Valve identification
   2. Equipment identification
   3. Piping identification
   4. Signage

1.2 RELATED DOCUMENTS

A. Section 22 05 01 - Plumbing General Provisions

B. Section 22 05 50 - Access Doors in General Construction for Plumbing

1.3 REFERENCE STANDARDS

A. ASME – American Society of Mechanical Engineers
   1. ASME A13.1 – 2007: Scheme for the Identification of Piping Systems

1.4 QUALITY ASSURANCE

A. Piping identification shall comply with ASME Standard A13.1.

1.5 SUBMITTALS

A. Submit the following:
   1. Valve identification chart
   2. Lists of pipe and equipment to be labeled
   3. Color chart

B. Product Data: Manufacturer's latest published data for materials, equipment and installation, including samples of valve tags, equipment identification and piping identification.

C. Maintenance Manuals: Provide valve tag schedules for inclusion in maintenance manuals.

PART 2 - PRODUCTS

2.1 ACCEPTABLE MANUFACTURERS

A. Brady/Seton

B. Stranco

C. Kolbi

2.2 VALVE IDENTIFICATION

A. All tagged components shall be in accordance with ASME A13.1.

B. For valves, use metal tags 2-inch minimum diameter, fabricated of 19-gauge polished brass, stainless steel or aluminum.
   1. Attach tags with jack chain "S"-hook or split ring of same materials.
   2. Provide engraved/stamped tags with black ink-filled 1/4-inch high letters and 1/2-inch high numbers.
   3. Provide 5/32-inch hole for fastener.

2.3 PIPE IDENTIFICATION

A. Pipe markers shall have 1.25-inch high letters and integral directional flow arrows. Smaller letters may be used only when space does not permit 1.25-inch high lettering.

B. For piping up to 5-inch diameter, use pre-formed snap-on markers. For piping 6-inch diameter and up, use pre-formed strap-on markers with nylon straps.

05/03/13 PERMIT SET

C. Material: Semi-rigid colored vinyl; 15 gauge up to 1-inch pipe, 30 gauge for all other pipe sizes.

D. Seton “Setmark” or equal.

E. Pressure-sensitive tapes are unacceptable.

2.4 EQUIPMENT IDENTIFICATION

A. Plumbing equipment shall be identified by means of nameplates permanently screw-fastened to the equipment. Nameplates shall be black surface, white core laminated bakelite with engraved letters. Plates shall be a minimum of 3-inch long by 1-inch wide with white letters 3/8-inch high.

2.5 SIGNAGE

A. Provide engraving stock melamine plastic laminate, complying with FS L-P-387, in sizes and thicknesses indicated, engraved with engraver's standard letter style of sizes and wording indicated, black with white core (letter color) except as otherwise indicated, punched for fastening except where adhesive mounting is necessary because of substrate.

1. Thickness: 1/16-inch for signs up to 20 square inches or 8-inch length; 1/8-inch for larger signs.
2. Fasteners: Self-tapping stainless steel screws, except contact type permanent adhesive where screws cannot or should not penetrate substrate.

PART 3 - EXECUTION

3.1 VALVE IDENTIFICATION

A. Do not identify valves where the use is obvious, such as equipment isolation valves.

B. Provide schedules of all valves showing identification number, size, type and service of each valve. Provide separate list for each separate type of system. Incorporate in maintenance manuals.

3.2 EQUIPMENT IDENTIFICATION

A. Identify equipment with identical letter and/or number as used on the Drawings. Where space is available, use full name of equipment. Attach nameplates in a permanent manner in a location that will be clearly visible after installation is complete.

3.3 PIPING IDENTIFICATION

A. Piping identification shall be in conformance with the ASME A13.1.

B. Identify piping systems with color-coded bands, sharply contrasting with background. Locate bands near strategic points, such as valves, items of equipment, changes in direction, wall penetrations, capped stub-out for future connection and every 40 feet of straight runs. If necessary, paint a strip background of black or white to obtain contrast.

C. Apply bands where they can be easily read. Provide bands with backgrounds of different colors.

3.4 ACCESS IDENTIFICATION

A. Identify service, piping and equipment behind all architectural access doors.

B. Removable ceiling tile shall be marked by small color markings at corner of tile or door in accordance with the following color assignment:
Plumbing – Silver

3.5 INSTALLATION OF IDENTIFICATION

A. Where identification is to be applied to surfaces which require insulation, painting or other covering or finish, including valve tags in finished spaces, install identification after completion of covering and painting. Install identification prior to installation of acoustical ceilings and similar removable concealment.

END OF SECTION

05/03/13 PERMIT SET

SECTION 220719

INSULATION FOR PLUMBING

PART 1 - GENERAL

1.1 WORK INCLUDED

A. The work of this Section shall include, but is not limited to, the following:
   1. Piping insulation, jackets
   2. Equipment insulation and covering

1.2 RELATED DOCUMENTS

A. Section 22 05 01 – Plumbing General Provisions

B. Section 22 11 00 – Domestic Water Systems

C. Section 22 13 00 – Drainage Systems

D. Section 22 33 00 – Domestic Water Heating System

1.3 REFERENCE STANDARDS

Published specifications standards, tests or recommended methods of trade, industry or governmental organizations apply to work in this Section where cited below:

A. ASTM – American Society for Testing and Materials
   1. ASTM C 534/C 534M – 2008: Standard Specification for Preformed Flexible Elastomeric Cellular Thermal Insulation in Sheet and Tubular Form
   2. ASTM C 547 – 2007 Revised 2008: Standard Specification for Mineral Fiber Pipe Insulation
   3. ASTM C 612 – 2004 Revised 2009: Standard Specification for Mineral Fiber Block and Board Thermal Insulation
   4. ASTM E 84 – 2009: Standard Test Method for Surface Burning Characteristics of Building Materials

B. NFPA – National Fire Protection Association
   1. NFPA 225, Edition 09 – Model Manufactured Home Installation Standard

C. UL – Underwriters Laboratories Inc.
   1. UL 723 – 2008: Test for Surface Burning Characteristics of Building Materials

D. California Mechanical Code – 2010 edition

E. California Plumbing Code – 2010 edition

F. California Building Code – 2010 edition

G. California Fire Code

1.4 QUALITY ASSURANCE

A. All insulation shall be in accordance with Title 24, ASHRAE Standard 90, applicable codes.

B. Insulation supplier and insulation installer shall have a minimum of 5 years' successful installation experience on projects of similar scope to this project.

1.5 SUBMITTALS

A. Product Data: Provide product description, list of materials and thickness for each service or equipment scheduled, locations, and manufacturer's installation instructions.

B. Submit details of sheet metal boxes for pieces of insulated equipment. Refer to sub-Clause 2.5, A.5.

C. Certificates: Submit manufacturer's certificate that product(s) meet or exceed specified requirements.

05/03/13 PERMIT SET

1.6 ENVIRONMENTAL REQUIREMENTS

A. Maintain ambient temperatures and conditions during storage and installation of all products required by manufacturers of adhesives, mastics, and insulation cements.

B. Protect insulation from contact with water.

PART 2 - PRODUCTS

2.1 ACCEPTABLE MANUFACTURERS

A. Insulation with/without Integral Jackets: Owens-Corning Fiberglass; Johns Manville; Armstrong; Certain-Teed, PPG.

B. Adhesives and Sealers: Ductmate, Benjamin Foster (BF); Insul-Coustic (IC); 3M, Childers.

C. Jackets: Childers; Johns Manville.

D. Pre-molded fitting, valve, strainer and equipment insulation: Extol of Ohio Inc., or approved equal.

2.2 GENERAL

A. Conform to application schedule for type and thickness of insulation.

B. Insulation, jacket, facing and adhesives shall be non-combustible material meeting Code requirements and fire and smoke hazard ratings as tested by procedure ASTM E 84, National Fire Protection Association 225, and UL 723, not exceeding Flame Spread 25 and Smoke Developed 50.

C. Adhesive, mastic or insulating material shall not contain asbestos.

D. Vapor jacket permeance shall be 0.02 perms or less.

E. Jacket puncture resistance shall be 50 units (Beach) or greater.

2.3 PIPE INSULATION MATERIALS

A. Glass Fiber: ASTM C 547; rigid molded, non-combustible.
   1. Installed 'K' Value: 0.23 BTU-inch per hour-foot^2-degree F at 75 degrees F.
   2. Maximum Service Temperature: 850 degrees F.
   3. Vapor Retarder Jacket: White kraft paper, vinyl coated, embossed and reinforced with glass fiber yarn and bonded to aluminum foil, secure with self-sealing longitudinal laps and butt strips.

B. Elastomeric Foam: ASTM C 534/C 534M flexible cellular elastomeric, molded or sheet.
   1. Installed 'K' Value: 0.27 BTU-inch per hour-foot^2-degree F at 75 degrees F.
   2. Maximum Service Temperature: 220 degrees F.

C. Field-Applied Jackets:
   1. PVC Plastic: One-piece molded type fitting covers and sheet material, gloss white. Connections shall be pressure-sensitive color-matching vinyl tape.
   2. Canvas Jacket: UL Listed fabric, 6 ounce per square yard, plain weave cotton treated with dilute fire-retardant lagging adhesive.
   3. Aluminum Jacket: 0.016-inch thick sheet, stippled finish, with longitudinal slip joints and 2-inch laps, die-shaped fitting covers with factory-attached protective liner.
   4. Stainless Steel Jacket: Type 304 stainless steel, 0.010 inch, smooth finish.

2.4 PIPE INSULATION SCHEDULES

A. Insulation Schedules:

Service	Temperature Range (degrees F)	Material	Insulation Thickness (inches) for Pipe Sizes:				
			1 and less	1.25 to 2	2.5 to 4	5 to 6	8 and up
Domestic hot water, domestic recirculated hot water	105 to 140	Glass fiber	1	1	1.5	1.5	1.5

05/03/13 PERMIT SET

Service	Temperature Range (degrees F)	Material	Insulation Thickness (inches) for Pipe Sizes:				
			1 and less	1.25 to 2	2.5 to 4	5 to 6	8 and up
Condensate drains (i.e. bodies and piping)	All	Elastomeric foam, glass fiber	0.5	0.5	0.5	–	–
Hot water and drain piping below lavatories	All	Glass fiber	1.5	1.5	1.5	–	–

B. Fittings, Valves and Flanges:
1. Use factory pre-molded fittings of the same materials and thickness as the pipe insulation for fittings, flanges and valves.
2. Where pre-molded insulation fittings are not manufactured, insulate fittings, flanges, strainers and valves with mitered segments of the same density as the adjoining pipe covering. Vaporseal for cold (below dew point) applications using adhesive with open weave glass mesh lay in while wet. Provide a final coat of adhesive. Overlap glass mesh and outer coat adjacent covering by a minimum of 2 inches. Adhesive shall be IC 501 or BF 30-35.
3. Provide insulation for the removable covers and flanges of pipe strainers on cold services with built-up sections of glass fiber pipe covering, arranged to facilitate servicing of the strainer. Complete applications with vaporseals as specified above. Vapor barriers shall be sealed and continuous through guides, hangers, walls, sleeves, etc. Adhesives and coatings shall be as noted herein.

2.5 EQUIPMENT INSULATION

A. Materials:
1. Flexible Fiberglass Blanket: ASTM C 553.
   a. Installed ‘K’ Value: 0.24 at 75 degrees F.
   b. Maximum Service Temperature: 450 degrees F.
   c. Density: 6.0 pounds per cubic foot.
   d. Vapor Retarder Jacket: Aluminum foil reinforced with fiberglass yarn and laminated to fire-resistant kraft paper, secured with UL Listed pressure-sensitive tape and outward clinch expanding staples and vapor barrier mastic as needed. Maximum vapor barrier perm rating shall not exceed 0.02 perms.
2. Rigid Fiberglass Board: ASTM C 612.
   a. Installed ‘K’ Value: 0.23 BTU-inch per hour-foot^2-degree F at 75 degrees F.
   b. Maximum Service Temperature: 450 degrees F.
   c. Density: 6.0 pounds per cubic foot.
   d. Vapor Retarder Jacket: Aluminum foil reinforced with fiberglass yarn and laminated to fire-resistant kraft paper, secured with UL Listed pressure-sensitive tape and outward clinch expanding staples and vapor barrier mastic as needed. Maximum vapor barrier perm rating shall not exceed 0.5 perms.
   e. Facing: 1-inch galvanized hexagonal wire mesh stitched on one face of insulation.
3. Elastomeric Foam: ASTM C 534, flexible cellular elastomeric, molded or sheet.
   a. Installed ‘K’ Value: 0.27 BTU-inch per hour-foot^2-degree F at 75 degrees F.
   b. Maximum Service Temperature: 220 degrees F.
4. Apply the vaporseal board by mechanical fasteners such as Graham pins and speed washers. Seal joints with an adhesive, as approved and reinforced with a glass cloth membrane over vinyl mastic, or self-sealing matching tape. Cover pinheads with adhesive, as specified. If vaporseal board is wired, use sheet metal edges to protect the corners of the board from the wire. Seal edges and joints.
5. Enclose removable covers or heads for equipment, (such as strainers, heat exchangers and pumps) in aluminum sheet metal boxes for easy removal with fiberglass board applied to inside of sheet metal boxes of thickness as described above. Provide lifting handles for removal of boxes.
6. Install equipment insulation in accordance with manufacturer’s instructions.

B. Equipment Insulation Schedule:

Service	Material	Thickness (inches)
Domestic hot water storage and expansion tanks	Flexible glass fiber	2

PART 3 - EXECUTION

3.1 EXAMINATION AND PREPARATION

A. Verify that all surfaces are clean, dry and free of dirt, duct, debris, moisture or foreign material.

3.2 INSTALLATION

A. Install materials in accordance with manufacturer's recommendations, building codes and industry standards.

B. Verify piping has been pressure-tested as specified before applying insulation materials to pipe joints.

C. Continue insulation and vapor barrier through penetrations.

D. Piping, Valve and Accessories Insulation:

1. Insulate domestic hot water supply lines inside chases and up to the plumbing fixture supply stop.
2. Locate insulation and cover seams in least visible locations where exposed.
3. Neatly finish insulation at supports, protrusions, and interruptions.
4. Provide insulated pipes, fittings, valves and accessories conveying fluids below ambient temperature with continuous vapor retarder jackets with self-sealing laps. Insulate complete system and provide molded flexible polyvinyl chloride jacket(s) for all fittings and valves. Vaporseal all jacket seams.
5. For insulated pipes, fittings, valves and accessories conveying fluids above ambient temperature, secure jackets with self-sealing lap or outward clinched, expanded staples. Bevel and seal ends of insulation at equipment, flanges and unions.
6. Protect pipe insulation at hangers, guides, and rollers with 20-gauge galvanized metal shields, one-third the insulation circumference in width and minimum 6 inches in length up to 4-inch pipe size, 12 inches in length on pipes 5-inch and larger, on the outside of the insulation and vapor barrier or jacket. Center shield on hanger and hold shield in place by straps or by manufactured centering tabs or channels on the shield itself. Do not pierce the insulation with hangers.
7. Provide insert between support shield and piping. Fabricate of heavy density non-deforming insulating material suitable for temperature. Length of insulation inserts shall match support shield length as specified.
8. For exterior applications or locations where abrasion or damage may occur, provide weather protection jacket. Insulated pipe, fittings, accessories joints, and valves shall be covered with ultra-violet light-resistant painted polyvinyl chloride or aluminum jacket. Jacket seams shall be located on bottom side of horizontal piping.
9. Apply prefabricated sectional insulation for straight pipes neatly fitted around the piping, and sealed with adhesive. Apply adhesive to only one side of each joint and not to pipe surface.
10. Seal all joints with BF 30-35 fire-resistant vapor barrier mastic. Oversized pipe sections or board type insulation may be used to fabricate and install insulation around pipe specialties. All void spaces shall be firmly filled with flexible insulation to support oversized pipe insulation.
11. Secure sectional insulation with 0.02-inch thick by 1/2-inch wide aluminum bands manufactured by Childers, or Thomas & Betts "TY-RAP" nylon ties, on 24-inch centers for pipe sizes 2 inches and larger. Install at least two (2) bands per section of insulation.
12. Insulate and thoroughly vaporseal control valve bodies where the valve actuator penetrates the insulation.
13. Replace any self-sealing insulation or lap that is found to be not sealing properly. Do not use staples to secure the insulation or coverings.

05/03/13 PERMIT SET

E. Equipment Insulation:
   1. Apply insulation as close as possible to equipment by grooving, scoring, and beveling insulation, if necessary. As required, secure insulation to equipment with studs, pins, clips, adhesive, wires, or bands.
   2. Fill joints, cracks, seams, and depressions with bedding compound to form smooth surface.
   3. For insulated equipment containing fluids above ambient temperature, provide jacket with or without vapor barrier.
   4. Cover insulation with metal mesh and finish with 1/2-inch thick insulating cement, or aluminum jacket.
   5. Do not insulate over sight glasses, visual level or flow indicators, nameplates or ASME stamps. Bevel and seal insulation around these items.
   6. When equipment with insulation requires periodic opening for maintenance, repair, or cleaning, install insulation in such a manner that it can be easily removed and replaced without damage to insulation or vapor barrier.
   7. Hot equipment insulation shall be covered with 1/2-inch thick insulating cement over copper-clad hexagonal wire.

END OF SECTION

05/03/13 PERMIT SET

SECTION 221100

DOMESTIC WATER SYSTEMS

PART 1 - GENERAL

1.1 WORK INCLUDED

A. General: Provide complete and operable domestic water systems within the intent of the Contract Documents; including but not limited to all materials and labor for complete installation and testing, in compliance with applicable provisions and recommendations in the Reference Standards.

B. Water service contract limit line shall be five feet from building wall or as indicated on the Drawings.

C. Make arrangements to provide domestic water services into this project.

D. The Contractor shall pay all connection fees, tap charges, and permit fees if any assessed by local authorities.

1.2 RELATED DOCUMENTS

A. Section 22 05 01: Plumbing General Provisions

B. Section 22 05 16: Expansion Compensation for Plumbing

C. Section 22 05 19: Meters, Gauges and Thermometers for Plumbing

D. Section 22 05 29: Supports, Hangers, Anchors and Sleeves for Plumbing

E. Section 22 05 48: Vibration Isolation and Seismic Restraints for Plumbing

F. Section 22 05 50: Access Doors in General Construction for Plumbing

G. Section 22 21 01: Hydronic Systems Specialties for Plumbing

H. Section 22 40 00: Plumbing Fixtures

I. Section 23 09 00: Building Management Systems (BMS)

J. Section 23 09 93: Automatic Control Sequences

K. Division 26: Electrical Specifications

1.3 REFERENCE STANDARDS

Published specifications standards, tests or recommended methods of trade, industry or governmental organizations apply to work in this Section where cited below:

A. ANSI – American National Standards Institute
   1. The ANSI/AWWA C100/A21 series of standards for Ductile-Iron Pipe and Ductile-Iron and Gray-Iron Fittings for Water, Waste Water and Reclaimed Water Systems

B. ASME – American Society of Mechanical Engineers
   1. ASME A112.1.2 – 2004: Air Gaps in Plumbing Systems (For Plumbing Fixtures and Water-Connected Receptors)
   2. ASME B16.10 – 2000 Revised 2003: Face to Face and End to End Dimensions of Valves
   3. ASME B16.18 – 2001 Revised 2005: Cast Copper Alloy Solder Joint Pressure Fittings
   4. ASME B16.22 – 2001 Revised 2005: Wrought Copper and Copper Alloy Solder-Joint Pressure Fittings
   5. ASME B16.24 – 2006: Cast Copper Alloy Pipe Flanges and Flanged Fittings, Classes 150, 300, 400, 600, 900, 1500 and 2500
   6. ASME B16.34 – 2004: Valves – Flanged, Threaded and Welding End
   7. ANSI/ASME B31.1 – 2007 Revised 2008: Power Piping
   8. ASME B31.9 – 2008: Building Services Piping

C. ASSE – American Society of Sanitary Engineering
   1. ASSE 1010-2004 – Performance Requirements for Water Hammer Arresters
   2. ASSE 1011-2004 – Performance Requirements for Hose Connection Vacuum Breakers
   3. ASSE 1013-2005 – Performance Requirements for Reduced Pressure Principle Backflow Preventers and Reduced Pressure Fire Protection Principle Backflow Preventers

05/03/13 PERMIT SET

4. ASSE 1017-2003 revised 2004 – Performance Requirements for Temperature Actuated Mixing Valves for Hot Water Distribution Systems
5. ASSE 1018-2001 – Performance Requirements for Trap Seal Primer Valves - Potable Water Supplied
6. ASSE 1020-2004 – Performance Requirements for Pressure Vacuum Breaker Assembly

D. ASTM – American Society for Testing and Materials
1. ASTM B 16 / B 16M – 2005: Standard Specification for Free-Cutting Brass Rod, Bar and Shapes for Use in Screw Machines
2. ASTM B 32 – 2008: Standard Specification for Solder Metal
3. ASTM B 62 – 2009: Standard Specification for Composition Bronze or Ounce Metal Castings
4. ASTM B 88 – 2003: Standard Specification for Seamless Copper Water Tube
5. ASTM B 813 – 2009: Standard Specification for Liquid and Paste Fluxes for Soldering of Copper and Copper Alloy Tube

E. AWWA – American Water Works Association
1. AWWA C104/A21.4 – 2008: Cement-Mortar Lining for Ductile-Iron Pipe and Fittings for Water
2. AWWA C105/A21.5 – 2005: Polyethylene Encasement for Ductile-Iron Pipe Systems
3. AWWA C110/A21.10 – 2008: Ductile-Iron and Gray-Iron Fittings
4. AWWA C111/A21.11 – 2007: Rubber-Gasket Joints for Ductile-Iron Pressure Pipe and Fittings
5. AWWA C116/A21.16 – 2003: Protective Fusion-Bonded Epoxy Coatings for the Interior and Exterior Surfaces of Ductile-Iron and Gray-Iron Fittings for Water Supply Service
6. AWWA C150/A21.50 – 2008: Thickness Design of Ductile-Iron Pipe
7. AWWA C151/A21.51 – 2002: Ductile-Iron Pipe, Centrifugally Cast, for Water
8. AWWA C153/A21.53 – 2006: Ductile-Iron Compact Fittings for Water Service
9. AWWA C509 – 2001: Resilient-Seated Gate Valves for Water Supply Service
10. AWWA C510 – 2007: Double Check Valve Backflow Prevention Assembly
11. AWWA C651 – 2005: Disinfecting Water Mains
12. AWWA C700 –2002 Revised 2008: Cold Water Meters – Displacement Type, Bronze Main Case

F. AWS – American Welding Society
1. AWS A5.8/A5.8M – 2004: Specification for Filler Metals for Brazing and Braze Welding

G. FM – Factory Mutual Approvals LLC

H. MSS – Manufacturers Standardization Society of the Valve and Fittings Industry
1. MSS SP-70-2006: Gray Iron Gate Valves, Flanged and Threaded Ends
2. MSS SP-80-2008: Bronze Gate, Globe, Angle and Check Valves

I. NSF – National Sanitation Foundation
1. NSF/ANSI 61, edition 08: Drinking Water System Components – Health Effects

J. PDI – Plumbing and Drainage Institute
1. PDI WH 201 – 2006: Water Hammer Arresters

K. UL – Underwriters Laboratories Inc.

L. USC's FCCC – Foundation for Cross-Connection Control and Hydraulic Research

M. California Energy Code 2008, California Code of Regulations, Title 24 – Building Standards

N. California Plumbing Code – 2010 edition

O. California Building Code – 2010 edition

P. Comply with the applicable provisions and recommendations of the standards and codes listed in Paragraph 1.03 Reference Standards and the requirements of the listed related documents in 1.02 Related Documents.

Q. Valves construction shall be suitable for the pressure, temperature, and fluid quality of the service in which they are to be used.

R. All valves shall be manufactured in accordance with ANSI, AWWA, ASTM, MSS-SP-70 & 80 (Manufacturers Standardization Society of the Valve and Fittings Industry), standards and specifications.

S. ANSI/ASME B31.1 for power piping valves and ASME B31.9 for building services piping valves.

T. ASME 16.10 and ASME 16.34 for dimension and design criteria.

U. NSF Compliance: NSF 61 for valve materials for potable-water service.

V. Minimum test pressure for all valves shall be 1.5 times maximum system working pressure unless noted otherwise.

1.4 SUBMITTALS

A. For each type of valve indicated, submit body, seating, and trim materials; valve design; pressure and temperature classifications; end connections; arrangement; dimensions; and required clearances. Include list indicating valve and its application. Include rated capacities; pressure differential range, shipping, installed, and operating weights; furnished specialties; and accessories.

B. Submit a schedule of all major control valves for review and acceptance, complete with all pertinent data, such as manufacturer, materials of construction, catalog number, cold water working pressure, etc.

C. Product Data: Submit manufacturer's latest information on construction details, rated capacity data, operating characteristics and installation data.

D. Submit, for all equipment provided under this Section, dimensions, accessories, required clearances, electrical requirements and wiring diagrams specific to this project that clearly differentiate between manufacturer-installed and field-installed wiring and location and size of all required field connections.

E. Submit manufacturer's installation instructions, operation data, start-up instructions, maintenance data, parts list and controls specific to this project, accessories, and maintenance data.

F. Submit Domestic Water System cleaning and flushing test report.

G. Submit Domestic Water System chlorine residues and bacteriological samples testing.

H. Submit Operational and Maintenance (O&M) manuals.

PART 2 - PRODUCTS

2.1 ACCEPTABLE MANUFACTURERS

A. Following is a list of manufacturers whose products may be submitted for review. All items submitted as being equal shall have same quality, finish, free area, material construction, etc., as those specified under base Specification.

B. Approved Manufacturers:
   1. Copper Piping: Anaconda, Cambridge-Lee, Cerro, Howell Metal, Wolverine, or approved equivalent.
   2. Copper Fittings: NIBCO, Elkhart, or approved equivalent.
   3. Gate Valves: Jenkins, Crane, Kennedy, NIBCO, Stockham, or approved equivalent.
   4. Ball Valves and Check Valves: Conbraco, NIBCO, Stockham, Watts Industries, or approved equivalent.
   5. Balancing Valves: Armstrong, B&G, Taco, Tour & Andersson, Victalic, Griswold Controls or approved equivalent.
   6. Stop and Drain Valves: Conbraco (Apollo), or approved equivalent.
   7. Solenoid Valves: Automatic Switch Company (ASCO), Golden Anderson, or approved equivalent.
   8. Strainers – "Y" Type: Conbraco (Apollo), Watkins, or approved equivalent.
   9. Strainers – "Plate" Type: Badger, or approved equivalent.
   10. Vacuum Breakers – Atmospheric Type: Watts Industries, Wilkins, or approved equivalent.
   11. Vacuum Breakers – Pressure Type: Conbraco, Wilkins, or approved equivalent.

12. Pressure Reducing Valves: Bermad, GA Industries, Golden Anderson Valves, Watts Industries, Wilkins, or approved equivalent.
13. Relief Valves: Wilkins, Watts Industries, or approved equivalent.
14. Thermostatic Mixing Valves: Leonard, Powers, Process Controls, or approved equivalent.
15. Water Hammer Arrestors: Precision Plumbing Products, Zurn, Sioux Chief, or approved equivalent.
16. Backflow Preventers: Ames, Febco, Conbraco, Watts Industries, Wilkins, Zurn, or approved equivalent.
17. Trap Primers: Precision Plumbing Products, MIFAB, or approved equivalent.
18. Air Gap Fittings: MIFAB, or approved equivalent.
19. Expansion Tanks: Amtrol, Wessels, Bell and Gossett, or approved equivalent.
20. Brazing Alloys and Fluxes: Harris Products Group, Canfield, or approved equivalent.

2.2 PIPING AND FITTINGS

A. Above-Grade Piping Systems:
   1. Piping: Type “L” tubing ASTM B 88 - seamless copper water tube.
   2. Fittings:
      a. Cast copper alloy complying with ASME B16.18.
      b. Wrought copper solder type pressure fittings complying with ASME B16.22.
      c. Class 150, flat-faced, flanges complying with ASME B16.24.
   3. Joints:
      a. 1/2 inch to 1.5 inches: Soldered using ASTM B 32, lead-free alloys. Include water-flushable flux according to ASTM B 813. 100 percent lead free, 95 percent tin and 5 percent antimony composition, silver bearing solders, unless otherwise indicated; equivalent to:
         1) “Silverflo” by Canfield
         2) “Bridgit” by Harris Products Group
      b. 2 inches and larger: Brazed using AWS A5.8/A5.8M, AWS BCuP Series, copper-phosphorus alloys, unless otherwise indicated; equivalent to:
         1) “Stay- Silv 15” by Harris Products Group
         2) “Sil Can 15” by Canfield

2.3 VALVES

A. General Characteristics: Provide valves with threaded or flanged ends as required by the piping system in which they are installed and as specified. All valves shall have the name of the manufacturer and working pressure cast or stamped thereon.

B. Shut-off Valves – 2 inches and smaller size:
   1. Ball Valve: Bronze body, full port, 3-piece, extended handles that allow operation of the valve without breaking the vapor seal or disturbing the insulation, Type 316 stainless steel ball and stem, in-line repairable, rated for 600 psi non-shock WOG, TFE seats and seals, blowout-proof stem design, adjustable packing nut, extended solder connections and designed for soft solder and brazing installations; “S-595-Y-66” by NIBCO, “Apollo 82-240 Series” by Conbraco, or approved equivalent.

C. Shut-off Valves – 2.5 inches and larger size:
   1. Gate Valve: Iron body, resilient wedge, outside screw and yoke, 175 psi minimum working pressure, FDA approved epoxy coating inside and out, flanged pattern, meeting AWWA C509 standard; “Fig. F-619-RW” by NIBCO, or approved equivalent.

D. Check Valves:
   1. Swing Type – 2 inches and smaller: Bronze body ASTM B 62, Y-Pattern swing-type, threaded ends, manufactured in accordance with MSS SP-80, Class 125, with TFE seat disc; “S413-Y” by NIBCO, or approved equivalent.
   2. 2.5 inches and larger: Gray-Iron body Class 125, horizontal swing check valve, asbestos-free gasket, stop plug for screwdriver insertion to rotate and regrind seat, flanged ends; “G-933” by Stockham, or approved equivalent.

E. Balancing Valves:
   1. Bronze body, full port, 3-piece, 2 inch extended handles of non-thermal conductive material and protective sleeve that allows operation of the valve without breaking the vapor seal or disturbing the insulation, ASTM B 16/B 16M, chrome plated bronze ball, in-line repairable, rated for 150 psi and 600 psi non-shock WOG, TFE seats and seals, blowout-proof stem design, adjustable packing nut, memory stop, extended solder connections and designed for soft solder and brazing installations. Provide bronze ball valves on either side of balancing valve.

F. Stop and Drain Valves: Bronze body, full port, ASTM B 16/B 16M, chrome plated bronze ball, in-line repairable, rated for 400 psig WOG, TFE seats and seals, blowout-proof stem design, adjustable packing nut, drain cap, latch lock lever, sweat ends and designed for soft solder and brazing installations; “Apollo 95 Series” by Conbraco, or approved equivalent.

G. Relief Valves:
   1. Pressure and Temperature Relief Valve: Bronze body and spring and diaphragm combination pressure and temperature type relief valves with test lever and automatically reseating type thermostatic element. Tested under ANSI Z 21.22 with ratings as certified and listed by AGA and rated relief capacities greater than water heater’s BTU/hour input rating; Watts, or approved equivalent.
   2. Vacuum Relief Valve: Conformance with ANSI Z21.22, CSA certified, brass body and include a protective cap; “Model N36-M1” by Watts, or approved equivalent.

2.4 DOMESTIC WATER SYSTEM MISCELLANEOUS COMPONENTS

A. Water hammer arrestors:
   1. Pre-charged sealed air chamber, piston type arrester, with EPDM “O”-rings in seamless copper tube chamber lubricated by FDA-approved silicone compound, meeting or exceeding PDI Standard WH 201, ASSE Standard 1010, and ANSI A112.26.1M.
   2. Properly sized and selected per PDI Standard WH 201 and having sufficient displacement volume to dissipate the calculated kinetic energy generated by the piping system in accordance with PDI sizing guidelines.

B. Trap Primer: Type 1
   1. General: Tested and certified to the ASSE Standard 1018, non-flow though type trap primer body consisting of brass body and fittings and “O”-ring seals with no springs or diaphragms; not requiring adjustments and operating on line pressure drop, complete four view holes, removable filter screen, distribution unit, air gap, distribution unit for multiple drain applications.
   2. Style and Application:
      a. Single drain up to 3 drains: Pressure-drop activated brass trap seal primer, with inlet opening of male 1/2-inch NPT and outlet opening of female 1/2-inch NPT complete with four view holes and removable filter screen. Serves up to 3 floors drain traps and requires no adjustments and no air pre-charge; MIFAB® model M2-500, or approved equivalent.
      b. Serves up to 6 drains: Pressure-drop activated brass trap seal primer, with inlet opening of male 1/2-inch NPT and outlet opening of female 1/2-inch NPT complete with four view holes and removable filter screen and requires no adjustments and no air pre-charge; MIFAB® model MR-500, or approved equivalent.
      c. Serves up to 10 drains: Pressure drop activated brass trap seal primer, with inlet opening of male 1/2-inch NPT and outlet opening of female 1/2-inch NPT complete with four view holes and removable filter screen; MIFAB® model M1-500, or approved equivalent.
   3. Accessories: Air gap copper air gap fitting complete with a male NPT fitting at the inlet supply incorporating a stream directing nozzle, a female NPT outlet, and a 1-inch vertical air gap, conforming to ASME A112.1.2 Air Gaps in Plumbing Systems Standard; “MI-GAP” by MIFAB, or approved equivalent.

C. Trap Primer: Type 2 : Battery operated similar to model Mini Prime MPB-500-12V with box as manufactured by Precision Plumbing Products.

05/03/13 PERMIT SET

D. Strainers:
   1. "Y" Type Strainer: Sized to match line size, bronze "Y" type strainer, Type 304 stainless steel perforated screen 0.045-inch for domestic water service; "Series 59-300-L" by Conbraco, "Model YB Series" by Wilkins, or approved equivalent.

2.5 BACKFLOW PREVENTERS

A. Reduced Pressure Zone Backflow Preventer 2.5 inch and larger line size: Lead Free : Device meeting requirements of USC's FCCC & HR Manual, Sec. 10, ASSE 1013 and CSA B64 Series 7, B64.4; sized to accommodate line size indicated on the Drawings; with bronze body, strainer, soft seated bronze check valves with full port ball valve shut-off valves, pressure differential relief valve, air gap drain, and 4 bronze body ball type test cocks factory-installed on assembly; similar to "Model 375" By Wilkins.

B. Reduced Pressure Zone Backflow Preventer 2 inch line size or smaller: Lead Free : Device meeting requirements of USC's FCCC & HR Manual, Sec. 10, ASSE 1013 and CSA B64 Series 7, B64.4; sized to accommodate line size indicated on the Drawings; with bronze body, strainer, soft seated bronze check valves with full port ball valve shut-off valves or non-rising gate valves, pressure differential relief valve, air gap drain, and 4 bronze body ball type test cocks factory-installed on assembly; similar to " Series LF909 Lead Free and with Air Gap Drain" by Watts.

C. Reduced Pressure Zone Double Detector Backflow Preventer 2.5-inch to 10-inch line size: Lead Free Device meeting requirements of USC's FCCC & HR Manual, Sec. 10, ASSE 1013 and CSA B64 Series 07, B64.4; sized to accommodate line size indicated on the Drawings; with Stainless steel, strainer, soft seated check valves with rising stem gate valves, pressure differential relief valve, air gap drain etc. Bypass assembly consists of water meter and double check valve assembly with test cocks. Meeting requirements of USC's FCCC & HR Manual, Sec. 10, ASSE 1013 and CSA B64 Series 07, B64.4; similar to "Model DCDALF4A(4ALF-62E-E6) LEAD FREE" by Apollo Valves.

D. Vacuum Breakers:
   1. Atmospheric Type: Interior hose threads; "Series 8B" by Watts, "Series BFP-8" by Wilkins, or approved equivalent.
   2. Pressure Type: Sized to match line size, internally loaded check valve and loaded air inlet valve opening to atmosphere on discharge side of check valve with ball valves, bronze body construction, tight seating rubber discs, and ball type test cocks factory-installed on vacuum breaker, meeting requirements of USC's FCCC & HR Manual, Sec. 10, ASSE 1020 and CSA B64 Series 07, B64.1.2; "Model Series 40-500" by Conbraco, "Model Series 720-A" by Wilkins, or approved equivalent.

2.6 PIPING SEISMIC JOINT

A. Piping seismic joints shall consist of flexible loops of stainless steel braided flexible connectors similar to Flexible Expansion Loops as specified in specification Section 22 05 16 - Expansion Compensation for Plumbing.

B. Required seismic movement to be compensated for by the piping seismic joint shall be as identified on the Structural Drawings or on the Seismic Joint Schedule on the Drawings.

C. Provided pipe anchors located on each side of the building seismic joint and piping seismic joint, anchored to the structure. Anchors shall be as specified in specification Section 22 05 16 - Expansion Compensation for Plumbing.

PART 3 - EXECUTION

3.1 APPLICATIONS

A. Piping:
   1. Provide unions at connections to each piece of equipment for easy dismantling and at such other points to facilitate installation. Unions shall be of same strength and manufacturer as used in the respective piping systems.

05/03/13 PERMIT SET

B. Shut-off Valves:
   1. Provide shut-off valves for all water supplied, equipment and fixtures, and devices which do not have supply stop or integral isolation valves provided with equipment or fixtures.
   2. Provide shut-off valves and capped outlets in water piping, as required and where indicated for future extension to equipment and fixtures provided under other Sections of the work.
   3. Provide shut-off valves at connections in water piping for the work of other trades, within two feet of their related equipment.
   4. Coordinate and include as part of this work final connections with applicable trade.
   5. Provide shut-off valves on each water riser.
   6. Provide shut-off valves for each shock absorber installation.

C. Backflow Preventers:
   1. Provide vacuum breakers and/or backflow preventers in all water supplies to fixtures and equipment requiring inlet connections wherein a minimum air break cannot be attained, or where chance of contamination may exist.
   2. Provide full size indirect waste from reduced-pressure backflow preventer's relief port's funnel drain connection to floor sink or floor receptor with air break at drain.
   3. Comply with manufacturer's specific instructions for installation of backflow preventer, and install and test in accordance with requirements of local jurisdictional authority.
   4. When required by the local Authorities Having Jurisdiction, reduced-pressure backflow preventers shall be installed in strict accordance with the regulations and requirements of that department.

D. Water hammer arrestors:
   1. Provide water hammer arrestors in the piping systems and adjacent to all pieces of equipment wherein quick-closing valves are installed.
   2. Water hammer arrestors shall be properly sized and selected per PDI Standard WH 201 and having sufficient displacement volume to dissipate the calculated kinetic energy generated by the piping system. Install all units in a vertical position.
   3. Provide access panels with Allen wrench key lock for each arrester.
   4. Install water hammer arrestors as close as possible to inlet side of quick closure valves and devices.
   5. Install water hammer arrestors in upright position on inlet side of solenoid valve.
   6. Do not install shock absorber at greater than 90-degree angle from vertical position.

E. Gauges: Provide pressure gauges in locations shown on the Drawings and as specified in Section 22 05 19 - Meters, Gauges and Thermometers for Plumbing. Shut-off cock shall be provided between gauge and piping to permit gauge removal while system is under pressure.

F. Thermometers: Provide thermometers with wells on inlet and outlet of water heaters and on hot water circulation lines, as specified in specification Section 22 05 19 - Meters, Gauges and Thermometers for Plumbing, and where indicated.

G. Strainer:
   1. Provide ball valve or hose bib on strainer blow-off port on strainers 2 inches and larger in line size.
   2. Provide strainer on inlet side of hot water circulation pump.
   3. Provide strainer upstream of solenoid valves.
   4. Provide strainer upstream of pressure-reducing valves supplied without integral strainers.
   5. Provide strainers in inlet line to all temperature-regulating mixing valves and automatic modulating control valves.
   6. Flush strainer and supply piping after hydrostatic pressure test and prior to operation of solenoid valves and pressure-regulating valves.
   7. Flush strainer prior to pump operation and at least once after pump has been placed into operation for period of no greater than 8 hours. Flush strainer as needed to assure piping is free of piping assembly sediment and debris.

H. Trap Primers:
   1. Provide trap primer units with trap primer discharge piping, and connection to tailpiece or drain body for each floor drain.

05/03/13 PERMIT SET

2. Provide trap primer units with trap primer discharge piping, and connection to tailpiece or drain body for each floor sink, [except floor sinks in serving food preparation sinks/equipment and dishwashing equipment].
3. Provide access panel for trap primers installed behind walls or above hard ceilings as specified in Section 22 05 50 - Access Doors in General Construction for Plumbing.
4. Trap primer discharge piping shall be same as specified for domestic water piping.
5. Provide field wrap of 50-mil PVC tape or factory-applied PVC coating around exterior of copper tubing that is buried in concrete floors.
6. Provide a line shut-off valve and union connection upstream of the trap seal primer in order to shut off the water supply when performing maintenance on the trap seal primer.

I. Relief Valves:
1. Provide adjustable bronze spring and diaphragm combination pressure and temperature type relief valves with test lever and automatically reseating type thermostatic element.
2. Pipe drain to spill over floor drain or to other safe location.
3. Locate on water heaters.

3.2 INSTALLATION

A. Piping:
1. Carry headers for groups of fixtures full size throughout their length.
2. All domestic water piping shall be arranged to drain to low points and to provide for air elimination at high points.
3. Mains, risers and branch connections to mains shall be arranged to permit expansion and contraction and seismic movement without strain by means of elbow swings and/or expansion joints and seismic movement.
4. All cut and threaded pipe shall have the cutting burrs and sharp edges reamed out. In erecting pipe, friction wrenches and risers shall be used exclusively, and any pipe cut, dented or otherwise damaged shall be replaced.
5. All ferrous to non-ferrous pipe connections shall be made with accepted dielectric pipe or flange union isolating joints to prevent any electrolytic action between dissimilar metals.
6. All copper tubing shall be cut and reamed to remove all burrs. Outside and inside of the fittings and outside of the tubing at each end shall be well cleaned with steel wool before soldering to remove all traces of oxidation regardless of how clean the surfaces of the pipe and fittings may appear.
7. Nipples: Any piece of pipe 8 inches in length and less shall be considered a nipple. All nipples with unthreaded portion 1.5 inches and less shall be extra heavy. All other nipples to be of weight corresponding to fitting connected. Only shoulder nipples shall be used; closed nipples will not be acceptable.
8. All fitting unions and connections at pumps, tanks or other major equipment 3 inches and over in size shall be assembled with flanged joints and approved gaskets.
9. Supports for vertical piping shall be double bolt riser clamps (consistent with pipe material, i.e., copper for copper pipe) with each end having equal bearing on the building structure. Vertical piping to be supported at every level. Refer to Section 22 05 29 - Supports, Hangers, Anchors and Sleeves for Plumbing.
10. Support piping for copper piping in accordance with Section 22 05 29 - Supports, Hangers, Anchors and Sleeves for Plumbing.

B. Valves:
1. Arrange and orientate valves, check valves, pressure-reducing valves, water hammer arrestors, trap primer valves, etc., in manner accessible for maintenance and/or removal.
2. Provide shut-off valves for cold water and hot water branches serving more than two fixtures.
3. Install standard weight or extra-heavy weight valves in conformity with the requirements for water piping fittings as specified.
4. Provide valves with soldered, threaded or flanged ends as required by the piping system in which they are installed and as specified.
5. Provide shut-off valves for all plumbing equipment, fixtures, and fixture trim, which do not have supply stop or integral isolation valves included.

05/03/13 PERMIT SET

C. Strainer:
   1. Flush strainer and supply piping after hydrostatic pressure test and prior to operation of solenoid valves and pressure-regulating valves.
   2. Flush strainer prior to pump operation and at least once after pump has been placed into operation for period of no greater than 8 hours. Flush strainer as needed to assure piping is free of piping assembly sediment and debris.

D. Thermometers: Install oversize pipe tee and nipple for wells of thermometer installations.

E. Trap Primer:
   1. Flush water line before installing trap primer. Ensure that all flux and other debris is removed.
   2. Use only Teflon tape around threads. Do not use pipe dope. Do not solder fittings directly onto the inlet or outlet of the primer.
   3. Cycle trap primer at least six (6) times to ensure optimum performance and view water discharge from the orifice.
   4. Disassemble and clean trap primer in event of excess water discharge or lack of water discharge.
   5. Do not install the trap seal primers closer than forty (40) feet apart when using the same potable water supply line.
   6. Mount trap primer outlet one foot above the finished floor for every twenty (20) feet of floor drain trap make-up water line.

3.3 TESTING AND ADJUSTMENTS

A. Provide, in written format, testing information including date of testing, starting pressure, pressure after test and length of test, pressure loss after test and witnesses present.

B. During the progress of the work, test the domestic water systems including fixture roughing-in sections as directed to permit general construction and building-in of rough work to proceed. Test entire piping systems or in sections after rough piping systems are installed where deemed advisable to meet construction schedule and sequencing of other work. Such tests shall be made in the presence of the Owner's Representative, Building Department Inspectors and any other Authorities Having Jurisdiction. A minimum of 48-hours' notice shall be given to the Engineer prior to any testing.

C. The Contractor shall provide all apparatus, temporary work or any other requirements necessary for such tests and shall take all due precautions to prevent damage to the Building or its contents. If damage occurs, the Contractor shall repair and remedy all damages made without cost to the Owner.

D. Any defects or deficiencies discovered as a result of tests shall be immediately repaired and tests repeated until the test requirements are fully complied with. Retest piping section which fails tests until successful tests results are obtained. No caulking of pipe joints to remedy leaks shall be permitted.

E. The domestic water supply system shall be tested to a hydraulic pressure equal to 1.5 times the normal operating pressure, but no less than 125 pounds per square inch before being enclosed and before non-conducting covering is applied. Do not connect fixtures, equipment and solenoid valves into system during this test. All leaks or defects indicated by tests shall be repaired or replaced with new material, as directed by the Engineer, and test repeated until all defects are removed. Disconnect apparatus for developing required pressures during stated periods. After fixtures are connected, test system for 2 hours at 75 psig or prevailing water pressure, whichever is higher.

F. Do not cover or conceal plumbing system or portion of plumbing system until after testing and approval by jurisdictional authority. Expose systems that has been covered or concealed before testing or inspection and retest.

3.4 DISINFECTION/CLEANING

A. Do not open valves separating new piping and existing water systems until piping tightness tests, flushing and disinfection has been completed. Provide temporary test valves piping and drain components to accomplish disinfection and cleaning.

B. Record flushing information including date of flushing, volume of flushing, length of time and witnesses present. Flush piping systems in accordance with the following:

1. Domestic Water – 3 inch and smaller pipe size:
   a. Prior to testing, flush piping with clean water until clean water free of silt or grit is observed for at least one minute, for specific pipe size.
   b. Flow rates per pipe size shall be as follows:

gpm	for pipe size (in inches)
220	3
150	2.5
100	2
55	1.5
40	1.25
25	1
16	3/4
8	1/2

C. Disinfection of Potable Water Systems: Comply with local requirements, where local code requirements are more stringent. Provide necessary labor, equipment, material and test kits for chlorine application and tests. Make all arrangements with jurisdictional water authority for witnessing chlorination and tests of proper disinfection. The Contractor shall pay all fees and costs including water sample testing.

1. Exterior Water Service Line: Perform disinfection of water main piping in conformance of applicable local jurisdictional authorities' standards and requirements of AWWA Standard C651, "Disinfecting Water Mains" with exception of Item 7.3.
   a. Following flushing of main, provide for collection of samples of water by Local Water Authority or Local Department of Health.
   b. Do not place main in service until water has been approved and notification received from Local Water Authority or Local Department of Health.

D. Interior Water Piping: Sterilize all parts of building water services system with water solution containing 50 parts per million of available chlorine for at least a 24-hour contact period. After contact period, flush all parts of system with clear water until system tests at no more than 0.2 ppm residual chlorine.

END OF SECTION

05/03/13 PERMIT SET

SECTION 221300

DRAINAGE SYSTEMS

PART 1 - GENERAL

1.1 WORK INCLUDED

A. General: Provide complete and operable drainage systems within the intent of the Contract Documents, including, but not limited to, all materials and labor for complete installation and testing, in compliance with applicable provisions and recommendations of the Reference Standards.

B. Drainage and vent systems, including, but not limited to, the following:
   1. Drainage and vent piping systems
   2. Drainage specialties

C. House drains and sewers contract limit line shall be five feet from building wall, or as indicated on the Drawings.

1.2 RELATED DOCUMENTS

A. Section 22 05 01: Plumbing General Provisions

B. Section 22 05 29: Supports, Anchors and Sleeves for Plumbing

C. Section 22 05 48: Vibration Isolation and Seismic Restraints for Plumbing

D. Section 22 11 00: Domestic Water Systems

E. Section 31 23 33: Trenching and Backfilling

1.3 REFERENCE STANDARDS

A. ANSI – American National Standards Institute
   1. ANSI/ASME B31.1 – 2007 Revised 2008: Power Piping

B. ASME – American Society of Mechanical Engineers
   1. ASME B1.20.1 – 1983 Revised 2006: Pipe Threads, General Purpose (Inch)
   2. ASME B16.1 – 2005: Gray Iron Pipe Flanges and Flanged Fittings, Classes 25, 125 and 250
   3. ASME B16.3 – 2006: Malleable Iron Threaded Fittings, Classes 150 and 300
   4. ASME B16.5 – 2009: Pipe Flanges and Flanged Fittings, NPS ½ through 24 (Metric/Inch Standard)
   5. ASME B16.10 – 2000 Revised 2003: Face to Face and End to End Dimensions of Valves
   6. ASME B16.34 – 2004: Valves – Flanged, Threaded and Welding End
   7. ASME B31.9 – 2008: Building Services Piping

C. ASTM – American Society for Testing and Materials
   1. ASTM A 47 / A 47M: Standard Specification for Ferritic Malleable Iron Castings
   2. ASTM A 53 / A 53M – 2007: Standard Specification for Pipe, Steel, Black and Hot-Dipped, Zinc-Coated, Welded and Seamless
   3. ASTM A 74 – 2009: Standard Specification for Cast Iron Soil Pipe and Fittings
   4. ASTM A 106 / A 106M – 2008: Standard Specification for Seamless Carbon Steel Pipe for High-Temperature Service
   5. ASTM A 153 / A 153M – 2009: Standard Specification for Zinc Coating (Hot-Dip) on Iron and Steel Hardware
   6. ASTM A 183 – 2003 Revised 2009: Standard Specification for Carbon Steel Track Bolts and Nuts
   7. ASTM A 197 / A 197M – 2006: Standard Specification for Cupola Malleable Iron
   8. ASTM A 395 / A 395M – 1999 Revised 2009: Standard Specification for Ferritic Ductile Iron Pressure-Retaining Castings for Use at Elevated Temperatures
   9. ASTM A 518 / A 518M – 1999 Revised 2008: Standard Specification for Corrosion-Resistant High-Silicon Iron Castings
   10. ASTM A 536 – 1984 Revised 2008: Standard Specification for Ductile Iron Castings

05/03/13 PERMIT SET

11. ASTM A 615 / A 615M – 2009: Standard Specification for Deformed and Plain Carbon-Steel Bars for Concrete Reinforcement
12. ASTM A 861 – 2004 Revised 2008: Standard Specification for High-Silicon Iron Pipe and Fittings
13. ASTM A 888 – 2009: Standard Specification for Hubless Cast Iron Soil Pipe and Fittings for Sanitary and Storm Drain, Waste, and Vent Piping Applications
14. ASTM B 633 – 2007: Standard Specification for Electrodeposited Coatings of Zinc on Iron and Steel
15. ASTM C 150 / C 150M – 2009: Standard Specification for Portland Cement
16. ASTM C 564 – 2009: Standard Specification for Rubber Gaskets for Cast Iron Soil Pipe and Fittings
17. ASTM C 1277 – 2009: Standard Specification for Shielded Couplings Joining Hubless Cast Iron Soil Pipe and Fittings
18. ASTM D 1248 – 2005: Standard Specification for Polyethylene Plastics Extrusion Materials for Wire and Cable
19. ASTM D 1599 – 1999 Revised 2005: Standard Test Method for Resistance to Short-Time Hydraulic Pressure of Plastic Pipe, Tubing, and Fittings
20. ASTM D 1784 – 2008: Standard Specification for Rigid Poly(Vinyl Chloride) (PVC) Compounds and Chlorinated Poly(Vinyl Chloride) (CPVC) Compounds
21. ASTM D 1785 – 2006: Standard Specification for Poly(Vinyl Chloride) (PVC) Plastic Pipe, Schedules 40, 80 and 120
22. ASTM D 2122 – 1998 Revised 2004: Standard Test Method for Determining Dimensions of Thermoplastic Pipe and Fittings
23. ASTM D 2564 – 2004 Revised 2006: Standard Specification for Solvent Cements for Poly(Vinyl Chloride) (PVC) Plastic Piping Systems
24. ASTM D 2665 – 2009: Standard Specification for Poly(Vinyl Chloride) (PVC) Plastic Drain, Waste, and Vent Pipe and Fittings
25. ASTM D 3222 - 2005: Standard Specification for Unmodified Poly(Vinylidene Fluoride) (PVDF) Molding, Extrusion and Coating Materials
26. ASTM D 3311 – 2009: Standard Specification for Drain, Waste, and Vent (DWV) Plastic Fittings Patterns
27. ASTM D 3753 – 2005 Revised 2007: Standard Specification for Glass-Fiber-Reinforced Polyester Manholes and Wetwells
28. ASTM E 84 – 2009: Standard Test Method for Surface Burning Characteristics of Building Materials
29. ASTM F 1290 – 1998 Revised 2004: Standard Practice for Electrofusion Joining Polyolefin Pipe and Fittings
30. ASTM F 1412 – 2009: Standard Specification for Polyolefin Pipe and Fittings for Corrosive Waste Drainage Systems

D. AWS – American Welding Society
   1. AWS B2.1/B2.1M – 2005 Revised 2009: Specification for Welding Procedure and Performance Qualification

E. CISPI – Cast Iron Soil Pipe Institute
   1. CISPI 301-05: Standard Specification for Hubless Cast Iron Soil Pipe and Fittings for Sanitary and Storm Drain, Waste, and Vent Piping Applications
   2. CISPI 310-04: Specification for Coupling for Use in Connection with Hubless Cast Iron Soil Pipe and Fittings for Sanitary and Storm Drain, Waste, and Vent Piping Applications
   3. CISPI Designation HSN 85: Specification for Neoprene Rubber Gaskets for Hub and Spigot Cast Iron Soil Pipe and Fittings

F. MSS – Manufacturers Standardization Society of the Valve and Fittings Industry
   1. MSS SP-70-2006: Gray Iron Gate Valves, Flanged and Threaded Ends
   2. MSS SP-80-2008: Bronze Gate, Globe, Angle and Check Valves

G. NFPA – National Fire Protection Association
   1. NFPA Standard 262, Edition 07 – Standard Method of Test for Flame Travel and Smoke of Wires and Cables for Use in Air-Handling Spaces.

05/03/13 PERMIT SET

H. NSF – National Sanitation Foundation
   1. NSF 14-2008: Plastics Piping System Components and Related Materials
I. California Energy Code 2008, California Code of Regulations, Title 24 – Building Standards
J. California Plumbing Code – 2010
K. Local Code and Code Amendments

1.4 QUALITY ASSURANCE

A. Comply with the applicable provisions and recommendations of the standards and codes listed in Paragraph 1.03 Reference Standards and the requirements of the listed related documents in Paragraph 1.02 Related Documents.
B. Valves construction shall be suitable for the pressure, temperature, and fluid quality of the service in which they are to be used.
C. All valves shall be manufactured in accordance with ANSI, AWWA, ASTM, MSS-SP-70 & MSS-SP-80 (Manufacturers Standardization Society of the Valve and Fittings Industry), standards and specifications.
D. ANSI/ASME B31.1 for power piping valves and ASME B31.9 for building services piping valves.
E. ASME 16.10 and ASME 16.34 for dimension and design criteria.
F. Minimum test pressure for all valves shall be 1.5 times maximum system working pressure unless noted otherwise.

1.5 SUBMITTALS

A. For each type of valve indicated, submit body, seating, and trim materials; valve design; pressure and temperature classifications; end connections; arrangement; dimensions; and required clearances. Include list indicating valve and its application. Include rated capacities; pressure differential range, shipping, installed, and operating weights; furnished specialties; and accessories.
B. Product Data: Submit manufacturer's latest information on construction details, rated capacity data, operating characteristics and installation data.
C. Submit, for all equipment provided under this Section, dimensions, accessories, required clearances, electrical requirements and wiring diagrams specific to this project that clearly differentiates between manufacturer-installed and field-installed wiring and location and size of all required field connections.
D. Submit manufacturer's installation instructions, operation data, start-up instructions, maintenance data, parts list and controls specific to this project, accessories, and maintenance data.
E. Submit report indicating the required rod clean of each roof drain, each roof overflow drain, each area drain and each leader. Submit test report of each drain tested with appropriate water flow for drain type in the presence of the Owner's Representative.
F. Submit all test reports witnessed by Plumbing Inspectors and Owner's Representative.
G. Submit Operational and Maintenance (O&M) manuals.

PART 2 - PRODUCTS

2.1 ACCEPTABLE MANUFACTURERS

A. Following is a list of manufacturers whose products may be submitted for review. All items submitted as being equivalent, shall have same quality, finish, free area, material construction, etc., as those specified under base Specification.
   1. Cast Iron Piping and Fittings: AB&I Foundry, Tyler Pipe, Anaco, Charlotte Pipe, Clamp-All Corporation, Mission Rubber Company, or approved equivalent.
   2. Cast Iron Drainage Products: Zurn Industries, J.R. Smith, Wade, Josam, Mifab, or approved equivalent.
   3. Copper Piping: Anaconda, Cambridge-Lee, Cerro, Howell Metal, Wolverine, or approved equivalent.
   4. Copper Fittings: NIBCO, Elkhart, or approved equivalent.

05/03/13 PERMIT SET

5. Low Torque No Hub Couplings: Anaco, Mission, Tyler Pipe, or approved equivalent.
6. High Torque No Hub Couplings: Clamp-All Corporation, Husky by Anaco, or approved equivalent.
7. Cleanouts: Zurn Industries, J.R. Smith, or approved equivalent.
8. Floor Drains: Zurn Industries, J.R. Smith, or approved equivalent.
9. Floor Sinks: Zurn Industries, J.R. Smith, or approved equivalent.
10. Air Gap Fittings: Zurn Industries, J.R. Smith, or approved equivalent.
11. P-Traps: Zurn Industries, Charlotte Pipe, or approved equivalent.
12. Auxiliary Inlet Fittings: Zurn Industries, J.R. Smith, or approved equivalent.
13. UV Resistant Paint: Kem Hi Temp Heat, Sherwin Williams, or approved equivalent.
14. Trench Drains: J.R. Smith, or approved equivalent.
15. Sand and Oil Interceptor: Jensen Precast, or approved equivalent.

2.2 DRAINAGE AND VENT PIPING SYSTEMS

A. Above Grade – Sanitary Vent, Sanitary Sewer and Storm Sewer:
   1. No hub, service weight, cast iron soil pipe labeled with the CI mark of quality and permanence as illustrated in latest standards of Cast Iron Soil Pipe Institute (CISPI) Standard 301, ASTM A 888 or ASTM A 74, and no hub drainage pattern fittings.
      a. Couplings:
         1) Low Torque No Hub Couplings: Series 301 stainless steel hubless coupling band conforming to CISPI Standard 310, using calibrated torque trench of 60 inches per pound, with gaskets conforming to ASTM C 564; “TYLER NO HUB” by Tyler Pipe or approved equivalent.
         2) High Torque No Hub Couplings: Series 304 stainless steel hubless coupling band conforming to CISPI Standard 310 and ASTM C 1277 installed using calibrated torque trench of 80 inches per pound, with gaskets conforming to ASTM C 564; “Husky SD4000” by Anaco, “Heavyweight Coupling” by Mission Rubber Company, “Clamp-All High Torque 80” by Clamp-All Corporation or approved equivalent.
   2. Type DWV Copper and Drainage Copper Fittings: ASTM B 306 with soldered joint
      a. Fittings: Drainage pattern
      b. DWV copper drainage piping and fittings are not allowed on urinal waste piping. Provide Schedule 40 galvanized steel pipe with standard weight galvanized cast iron drainage fittings to point of dilution.

B. Underground – Sanitary Vent and Sanitary Sewer Pipe – Application: All underground sanitary and vent piping systems under building and within 5 feet-0 inches of the building’s exterior foundation, unless otherwise noted on the Drawings.
   1. Hub and Spigot Type Pipe and Fittings: Service weight cast iron soil pipe with weight per foot and maker’s name clearly stamped or cast on each length, in conformance with ASTM A 74 and CISPI HSN, and push-on rubber gasketed joint to effect a water-tight seal, in conformance with ASTM C 564.
   2. No Hub Type Pipe and Fittings: No hub cast iron pipe and fittings shall comply with ASTM A 888, and CISPI 301, using High Torque No Hub Couplings: Series 304 stainless steel hubless coupling band conforming to CISPI 310 and ASTM C 1277 installed using calibrated torque trench of 80 inches per pound, with gaskets conforming to ASTM C 564; “Husky SD4000” by Anaco, “Heavyweight Coupling” by Mission Rubber Company, “Clamp-All High Torque 80” by Clamp-All Corporation.

C. Indirect Waste Piping:
   1. Unfinished Spaces: Type DWV copper tube with solder-fitting drainage type, cast copper couplings.
   2. Finished Spaces: Chrome plated brass piping with chrome plated brass threaded drainage pattern fittings.

05/03/13 PERMIT SET

2.3 DRAINAGE SPECIALTIES

A. General:
   1. Drains:
      a. Provide all required extension collars, flashing devices, etc., to suit roof, floor and deck construction in addition to features described for drains.
      b. All drains in public areas shall include vandal-proof features. All floor drains, roof drains and overflow drains shall have integral no-hub outlets when connecting to above-grade sanitary piping.
      c. Floor drain outlets connecting to buried piping shall be as style as required to comply with piping manufacturer recommendations and jurisdictional plumbing code.

B. Size of drain outlets shall be same as connecting pipe and as indicated on the Drawings.

C. Floor drains: Plan Code (FD-#); refers to floor drain type indicated on the Drawings.
   1. FD-1: Cast iron body, 5-inch Square stainless steel strainer having free area greater than or equal to the area of drain outlet, vandal-proof screws, 1/2-inch trap primer connection; similar to “2005-Y- U-B-HP-P02(50)” (figure 9700A) by J.R. Smith.Floor drains:

D. Floor Sinks:
   1. FSK-1: Acid-resistant coated cast iron drain body with 12.5-inch top and 6-inch deep receptor, dome strainer, nickel bronze grate with center hole, flashing clamp, outlet style as required to connect to specified piping system material and size; similar to “No. 3140-C-14-U” by J.R. Smith.

E. Clean Outs: Floor Type (FCO):
   1. Ceramic and Porcelain Tile Areas: (FCO-1) Cast iron cleanout with square adjustable scoriated nickel bronze top with tile recess, vandal-proof screws, bronze gasketed plug, spigot outlet; similar to “No. 4161S-U Series” by J.R. Smith
   2. Terrazzo and Similar Poured Floor Material Areas: (FCO-2) Cast iron cleanout with square adjustable scoriated nickel bronze top with recess, vandal-proof screws, bronze gasketed plug, spigot outlet; similar to “No. 4221S-U Series” by J.R. Smith.
   3. Boiler Room and Mechanical Rooms: (FCO-3) Extra heavy-duty cast iron cleanout with round adjustable galvanized cast iron top, vandal-proof screws, bronze gasketed plug, spigot outlet; similar to “No. 4201S-G Series” by J.R. Smith.

F. Wall Type (WCO) – Cleanout Wall Plate: Cast iron cleanout tee with round stainless steel cover, vandal-proof screws, taper thread bronze plug and spigot outlet; similar to “No. 4532 S-U –PC Series” by J.R. Smith.

G. Exposed Type (CO):
   1. Vertical: 6-inch pipe size and smaller: Cleanout tee with taper thread cast bronze plug; similar to 4512S by J.R. Smith.
   2. Horizontal – all pipe sizes: Cast iron tee “Y” fitting with tapped spigot ferrule and cast bronze taper thread plug similar to 4400 C by J.R.Smith.

H. Planter Drains PD-1: Cast iron body, bronze flashing clamp similar to “Series 2679 Y-NB” by J.R. Smith.

I. Roof Drains:
   1. Roof Drains RD-1 & Overflow Drains OFD-1 : 15 1/4-inch diameter, cast iron drain body with aluminum vandal-proof dome, adjustable extension, under-deck clamp, sump receiver, and combined flashing clamp and gravel stop, fasteners and gaskets; similar to “No. 1800-R-C-U-E-AD-SSMD” by J.R. Smith. Provide deck plate with securing brackets.
   2. Roof Drains RD-2 & Overflow Drains OFD-2: Scupper drains : Duco cast iron drain body Flashing clamp and loose set grate; similar to “No. 1530T-U angle grate” by J.R. Smith.

J. Area Drains:
   1. AD-1: Cast iron body, 5-inch Square stainless steel strainer having free area greater than or equal to the area of drain outlet, vandal-proof screws, 1/2-inch trap primer connection; similar to “2005-Y- U-B-HP-P02(50)” (figure 9700A) by J.R. Smith.

05/03/13 PERMIT SET

K. Garage Drains: GD-1: 12 inch diameter cast iron body and flashing collar with cast iron tractor grate similar to 2140C-U by J.R. Smith.
   1. Ferrules: Provide ferrules of "Extra Heavy" cast brass, and of weight and size as follows:

Size	Minimum Length (in Inches)	Weight (in Pounds)
2 inches	4.5	1
3 inches	4.5	1.75
4 inches & larger	6	2.5

L. Trench Drains:
   1. TD-1: 1/4-inch diameter hole perforated polished stainless steel grate for pedestrian and wheelchair use, pre-sloped channels, installation hardware, pipe outlet caps, with vandal-resistant grate fasteners; similar to "9870-451-SSPA" by J.R. Smith,.
      a. Channels: Cast at site : by General Contractor
      b. Provide strainer at bottom outlet sewer connection; "No. 9854" by J.R. Smith, or approved equivalent.
      c. Provide mitered joint at 90-degree change in direction.
      d. Provide grouting and approved sealant to connect drain piping to trench drain outlet.
      e. Provide closing end caps for end of trenches.
   2. TD-2: Slotted Cast iron grate and fasteners, dynamic loads and hard wheel forklifts. Similar to R-4999-CX, 12" wide Type P by Neenah Foundry.
      a. Channels: Cast at site : by General Contractor
         1) Provide strainer at bottom outlet sewer connection; "No. 9854" by J.R. Smith, or approved equivalent.
      b. Provide mitered joint at 90-degree change in direction. Provide grouting and approved sealant to connect drain piping to trench drain outlet.
      c. Provide closing end caps for end of trenches.

2.4 SAND OIL INTERCEPTOR

A. Sand Oil Interceptor:
   1. Pre-cast reinforced concrete sand trap with two sections divided by baffle with minimum 2 square feet for the net free opening of the inlet section and minimum depth under invert of the outlet pipe of 2 feet and the outlet section having minimum free area of 50 percent of the inlet section. Provide concrete risers as required to meet finished grade with 24-inch square solid cover plate cast iron manhole cover and frame to access sand interceptor; products by Jensen Precast, or approved equivalent. Refer to drawings for sizes and preferred models.
      a. Concrete: Type II Portland Cement ASTM C 150/C 150M, compressive strength 4000 psi at 28 days.
      b. Reinforcing Bar: ASTM A 615/A 615M, Grade 40, as needed.
      c. Secondary Reinforcing: "Fibermesh" polypropylene fibers added to concrete at concentration of 1.5 pounds per cubic yard to control shrinkage cracking.
      d. Pipe inlets size and location as required for piping system connections.
      e. Manhole frames and covers – heavy duty similar to model R-1687 as manufactured by Neenah Foundry.

2.5 DRAINAGE SPECIALTIES

A. General:
   1. Drains:
      a. Provide all required extension collars, flashing devices, etc., to suit roof, floor and deck construction in addition to features described for drains.
      b. All drains in public areas shall include vandal-proof features. All floor drains, roof drains and overflow drains shall have integral no-hub outlets when connecting to above-grade sanitary piping.

c. Floor drain outlets connecting to buried piping shall be as style as required to comply with piping manufacturer recommendations and jurisdictional plumbing code.

B. Size of drain outlets shall be same as connecting pipe and as indicated on the Drawings.
1. Floor Drains, Trench Drains: Plan Code (FD-#) (TD-#); refers to drain type indicated on the Drawings.
   a. Refer to Schedule on Drawings.
2. Floor Sinks: Plan Code (FS-#); refers to floor sink type indicated on the Drawings
   a. Refer to Schedule on Drawings.

C. Traps:
1. General:
   a. No hub cast iron “P” trap; “Fig No. NH43” or “NH42” and provide cast iron tailpiece with 1/2-inch tapping by Charlotte Pipe, or approved equivalent. Material same as piping system. Type of trap shall be approved by local code(s).
   b. Service weight cast iron “P” trap; “Fig No. SV 169” by Charlotte Pipe, or approved equivalent. Material same as piping system. Type of trap shall be approved by local code(s).
   c. Provide trap with trap primer connection where required for trap primer discharge piping connection to be at tailpiece of trap instead of body of drain.
2. Deep Seal “P” Trap:
   a. No hub cast iron cast iron deep seal “P” trap; “Fig No. NH44A” by Charlotte Pipe, or approved equivalent. Hub service weight cast iron cast iron deep seal “P” trap; “Fig No. NH44” by Charlotte Pipe, or approved equivalent.
   b. Hub and spigot or service weight cast iron deep seal “P” trap.
   c. Provide trap with trap primer connection where required for trap primer discharge piping connection to be at tailpiece of trap instead of body of drain.

D. Auxiliary Inlet Fittings:
1. No hub cast iron with 1/2-inch trap primer connection; “No. Z1023” by Zurn Industries, Inc., or approved equivalent, “No. 2695” by J.R. Smith,
2. Hub and spigot cast iron with 1/2-inch trap primer connection; “No. 2697C” by J.R. Smith, or approved equivalent.

2.6 UV-RESISTANT PAINT

A. Silicone acrylic, high solids, heat-resistant gloss topcoat, VOC compliant, 2 coats – 2 mil to 3 mil each coat, UV resistant, colors to be selected by Engineer (black, new tone white, cirrus gray, shale gray, thunder gray, or primer dark gray); “Kem HI Temp Heat – Flex II 450” by Sherwin Williams, or approved equivalent (no known equal).

PART 3 - EXECUTION

3.1 APPLICATIONS

A. No Hub Couplings:
1. Provide low-torque no-hub couplings on waste and sanitary piping 4 inches and smaller.
2. Provide low-torque no-hub couplings on vent piping.
3. Provide high-torque no-hub couplings on storm piping from area drains, roof drains and overflow drains.
4. Provide high-torque no-hub couplings on sanitary piping 5 inches and larger.

B. Pump Discharge Piping:
1. Pump discharge pipe size shall be sized for fluid velocity greater than 2 feet per second and not greater than 6 feet per second. Piping size shall not be less than indicated on the Drawings:
2. Provide gate or ball valve and check valve in each pump discharge piping, as specified in Section 22 11 23 – Plumbing Pumps.

C. Auxiliary Tailpiece with Tapped Inlet: Provide auxiliary tailpiece with tapped inlet for installation on drain body outlet piping, where trap primer is required and drain body and “P” trap is provided without trap primer connection.

05/03/13 PERMIT SET

D. UV-Resistant Paint: Provide coating on exterior of plastic pipe exposed to sun, including vents through roof.

3.2 INSTALLATION

A. Piping:
1. Make threaded joints with Teflon sealing tape and with a minimum of three screw threads left visible.
2. Nipples: Provide nipples of weight corresponding to piping. Use only shoulder nipples unless otherwise directed.
3. Pitch drainage piping, unless otherwise indicated, at a minimum rate of 2 percent in direction of flow for drainage system.
4. Provide capped and/or plugged connections in soil, waste and vent piping as required and where indicated on the Drawings (e.g., [wet columns], [tenant retail spaces]) for future extension to equipment and fixtures provided under other sections of the work.
5. Connections and Change in Direction:
   a. Make changes in direction with long sweep or bends or with 1/8 and/or 1/16 bends at cleanouts, combination “Y” and 1/8 bend branches at base of roof leader and drainage stacks and vertical piping rising to fixture waste rough-ins.
   b. Make connections of branches to mains with “Y” fittings and 1/8 or 1/16 bends.
   c. Double sanitary tees may be used when barrel of the fitting is at least two pipe sizes larger than the largest inlet.
   d. Do not change direction of flow more than 90 degrees.
   e. Use proper size of standard increasers and reducers if pipes of different sizes are connected.
   f. Reducing size of drainage piping in direction of flow is prohibited.
6. Buried Piping: Lay buried building drain piping beginning at low point of each system. Install true to grades and alignment indicated, with unbroken continuity of invert. Place hub ends of piping upstream. Install required gaskets according to manufacturer's written instructions for use of lubricants, cements, and other installation requirements. Maintain swab in piping and pull past each joint as completed.

B. Trap Primers: Refer to Section 22 11 00 – Domestic Water Systems, for additional related trap primer product selection, installation and coordination required for trap primer installations.

C. Trap Primer Discharge Piping:
1. Provide trap primers discharge piping appropriate for trap primers installed for trapped plumbing drainage installations indicated on the Drawings and where required by local jurisdictional codes.
2. Provide 1/2-inch Type “L” annealed copper tubing for trap primer discharge piping routing to auxiliary tailpiece with tapped inlets or tapped drain body with positive drainage slope towards connection.
3. Coordinate discharge piping routing and method of connection to inlet side of floor drain to tailpiece and insure discharge piping has positive drainage towards connection point at floor drain with no low points. Bury piping within floor slab where approved by Engineer.
4. Select appropriate type of connection at drainage system and provide floor drain trap primer connection within body of floor drain or provide auxiliary tailpiece with tapped connection as needed for proper installation.
5. Provide flexible unicellular insulation or flexible sealant and floor sleeve where piping passes through slab on grade.
6. Refer to Section 22 11 00 – Domestic Water Systems, for additional related trap primer product selection coordination required for trap primers installations.

D. Supports:
1. All horizontal cast iron no-hub pipe shall be supported every 10 feet maximum, and within 6 inches at each side of each joint. When a concentration of fittings occurs, additional support shall be installed, consistent with good trade practices. All horizontal cast iron soil piping shall be supported at each horizontal branch connection.
2. All horizontal plastic pipe 2 inches and smaller shall be supported in accordance with manufacturer support data based on temperature of 140 degrees F and on each side of

05/03/13 PERMIT SET

each joint. When a concentration of fittings occurs, additional support shall be installed, consistent with good trade practices. All horizontal piping shall be supported at each horizontal branch connection.

3. Supports for vertical piping shall be double bolt riser clamps, with each end having equal bearing on the building structure. Supports to be provided as follows:
   a. Cast iron pipe/plastic pipe at every floor and at its base.
   b. Threaded pipe at every other story height.
   c. All auxiliary steel and supports required for pipe supports shall be provided under this Section.
   d. Make piping rigid in piping chases using support systems to resist push or pull movement at fixture waste rough-ins.
   e. Make piping rigid in piping chases using supports system directly attached to piping to resist push or pull movement at fixture waste rough-ins.

E. No-Hub Cast Iron Soil Pipe:
1. Where components are suspended in excess of 18 inches by means of non-rigid hangers, brace against horizontal movement (sway brace).
2. 6 inches and larger: Brace to prevent horizontal movement at every branch opening and change of direction by securing to building structure.
3. In seismic zones 3 and 4, provide support on both sides of the no-hub coupling on piping 5-inch and larger routing over public, high-traffic areas, lobbies, and egress pathways.

F. Drains:
1. Provide floor drains and floor sinks with trap primer connections on body drain or by providing auxiliary tailpiece with tapped inlet.
2. Trap primers are not required for floor sink installations in food preparation areas unless otherwise noted.
3. Reset drain rims to suit final construction elevations.
4. Floor Drains:
   a. Set drain rims flush and level with finished floor in areas subject to foot traffic.
   b. Set drain rims minus 1/8 inch to 1/4 inch from finish floor elevation, so as to provide positive drainage, where drain is not subject to foot traffic.
5. Floor Sinks: Floor sinks installed for food prep area and for indirect waste only shall be installed with rim set above finished floor.
6. Make installations water-tight.

G. Traps:
1. Refer to Section 22 11 00 – Domestic Water Systems, for plumbing fixture traps.
2. Provide deep seal “P” traps for all floor drain and floor sink installation with trap primers. Should building conditions prevent use of a deep seal “P” trap, notify Engineer (on a case-by-case basis) for direction.
3. Set traps level with regard to their water line.
4. Traps shall be same size as connecting drain outlets.
5. Provide adaptor coupling where required to connect dissimilar waste piping materials as recommended by waste piping manufacturers.

H. Cleanouts:
1. Provide cleanouts in drainage systems in accordance with the Reference Standards and where indicated.
2. Provide cleanouts in indirect waste lines at every change in direction.
   a. Buried Piping:
      1) Provide cleanouts at ends of horizontal branches and mains, at base of riser conductor lines, at changes in direction greater than 45 degrees, in main drains where mains leave building, and where necessary to remove obstructions.
      2) Locate cleanouts so that developed length is not more than 50 feet apart on lines 4 inches and smaller and not more than 100 feet apart on lines 5 inches through 15 inches.
3. Cleanouts at the base of all drainage stacks with tapped tees capable of receiving a rough brass countersunk head.
4. Provide brass cleanout plugs and thoroughly coat threads on removable parts with graphite.

05/03/13 PERMIT SET

5. Provide a full size “Y” branch cleanout in sanitary house drains within 2 feet of the foundation wall.
6. Provide cleanouts and related covers full size for pipes up to 4 inches inclusive, not less than 4 inches for pipes up to 6 inches, not less than 6 inches for pipes up to 8 inches and 10 inches, and not less than 8 inches for pipes up to 12 inches and 15 inches.
7. Install cleanouts on 3-inch or larger pipes at location to maintain minimum clearance of 18 inches.
8. Install cleanouts on 1.5-inch and 2-inch pipes at location to maintain minimum clearance of 12 inches.

I. Vent Piping:
1. Provide vents shown on the Drawings, as required by Plumbing Code, and as necessary to prevent siphonage or back-pressure on trap seals and to maintain air circulation and atmospheric pressure throughout drainage system.
2. Grade vents to discharge water of condensation, where possible and do not allow reverse grade to trap water.
3. Make offsets at 45-degree angle wherever possible. Connect upper ends of drainage lines to vent system or extend through roof without decreasing size of vent stacks.
4. Arrange vents and related connections, except wet vent, to not carry drainage.
5. Connect bottom of vent risers to drains in an arrangement where the drainage will wash out rust and scale from the vent riser.
6. Extend portions of vents above floor line upwards to points not less than six (6) inches above flood rim of highest fixture before running horizontally.
7. Run portions below floor line vertically wherever possible.
8. Do not connect main vents into soil or waste stacks lower than six (6) inches above flood rim of highest fixture on stack.

3.3 TESTING AND ADJUSTMENTS

A. Provide testing of all installed drainage and vent systems during the progress of the work, including sanitary, vent systems, and fixture roughing-in sections, as directed to permit general construction and building-in of rough work to proceed. Such tests shall be made in the presence of the Owner's Representative, Building Department Inspectors and all other Authorities Having Jurisdiction. A minimum of 48-hours’ notice shall be given to all parties prior to any testing.

B. Take all due precautions to prevent damage to the building or its contents that may be incurred by such tests as the Contractor will be required to repair and make good, at own expense, any damage caused.

C. Any defects or deficiencies discovered as a result of tests shall be immediately repaired and tests shall be repeated until all test requirements are fully met.

D. No caulking of pipe joints to remedy leaks will be permitted.

E. Each section of drainage and vent rough-in piping tested shall have all openings tightly closed with screw plugs, or equal device, and stand without loss of level for a period of 4 hours when filled with water which produces at least a 10-foot head at the highest point of the section tested.

F. Submit to the Engineer copies of all test reports witnessed by Plumbing Inspector(s) and Owner's Representative.

END OF SECTION

05/03/13 PERMIT SET

SECTION 222101

HYDRONIC SYSTEMS SPECIALTIES FOR PLUMBING

PART 1 - GENERAL

1.1 WORK INCLUDED

A. The work of this Section shall include, but is not limited to, the following:
   1. Air vents
   2. Expansion tanks

1.2 RELATED DOCUMENTS

A. Section 22 05 01 - Plumbing General Provisions

B. Section 22 05 48 - Vibration Isolation and Seismic Restraints for Plumbing

1.3 REFERENCE STANDARDS

Published specifications standards, tests or recommended methods of trade, industry or governmental organizations apply to work in this Section where cited below:

A. ANSI – American National Standards Institute

B. ASME – American Society of Mechanical Engineers
   1. ASME Standard for Boiler and Pressure Vessel Code – 2007
      a. ASME BPVC – I through XII
   2. ASME DRF U-1 – 2007. Form U-1 Manufacturer's Data Report for Pressure Vessels – As Required by the Provisions of the ASME Boiler and Pressure Vessel Code Rules, Section VIII, Division 1

C. ASTM – American Society for Testing and Materials

D. UL – Underwriters Laboratories Inc.

E. California Energy Code 2008, California Code of Regulations, Title 24 – Building Standards

F. California Plumbing Code – 2010

G. Local Codes and Code Amendments

1.4 QUALITY ASSURANCE

A. Comply with the applicable provisions and recommendations of the standards and codes listed in Paragraph 1.03 – Reference Standards, and with the requirements listed in Paragraph 1.02 – Related Documents.

1.5 SUBMITTALS

A. For each type of device (relieve valve, automatic and manual air vents) indicated, submit valve body, seating, and trim materials; valve design; pressure and temperature classifications; end connections; arrangement; dimensions; and required clearances. Include list indicating valve and its application. Include rated capacities; pressure differential ranges.

B. Product Data: Submit manufacturer's latest certified published data on construction details, rated capacity data, operating characteristics, pressure ratings, operating weights, furnished specialties, and accessories and installation data including seismic restraints.

C. Submit, for all equipment provided under this Section, dimensions, accessories, required clearances, electrical requirements and wiring diagrams specific to this project that clearly differentiate between manufacturer-installed and field-installed wiring and location and size of all required field connections.

D. Submit manufacturer's installation instructions, operation data, start-up instructions, maintenance data, parts list and controls specific to this project, accessories and maintenance data.

E. Submit ASME Pressure Vessel Form for each expansion tank.

F. Submit Operational and Maintenance (O&M) manuals.

05/03/13 PERMIT SET

PART 2 - PRODUCTS

2.1 ACCEPTABLE MANUFACTURERS

A. Air Vents: Armstrong, Bell & Gossett, Sarco, Hoffman, Amtrol

B. Relief Valves: Armstrong, Bell & Gossett, Amtrol, McDonnell Miller, Kunkle

C. Expansion Tanks: Armstrong, Bell & Gossett, Amtrol, Taco, Wessels

2.2 AIR VENTS

A. Provide air vents with 3/4-inch IPS inlet connection and 3/8-inch outlet, suitable for the system and for the system working pressure and temperature. Design vents to eliminate air from the system automatically without permitting the passage of water. Construct vents of brass or semi-steel body, copper float and stainless steel valve parts.

2.3 RELIEF VALVES

A. Provide diaphragm-operated safety relief valve, ASME labeled, for relieving pressure. Refer to the Drawings for pressure rating of valve and relief setting. Discharge water shall be through NPT connection.

B. Provide valve with a low blow-down differential constructed of bronze or iron body. The valve seat and all moving parts exposed to fluid shall be of non-ferrous material.

2.4 EXPANSION TANKS

A. Provide a replaceable bladder type hydro-pneumatic expansion tank especially designed for use on the services specified. Construct the compression tank of welded steel and equip with a heavy-duty butyl rubber flexible bladder to maintain a separation between the system water and the air cushion. The system water shall be contained within the bladder. Provide with top inlet connection for all water systems. Each tank shall bear an appropriate ASME label for the required minimum working pressure and temperature as indicated on the expansion tank schedule on the Drawings.

1. Building Hot Water: 125 pounds per square inch gauge; 200 degrees F.

B. The minimum total tank and bladder volume shall be as specified on the Drawings. Provide a factory initial charge of 12 pounds per square inch gauge.

C. Provide suitable structural and seismic support as required for each tank as indicated on the Drawings.

D. Provide for each tank, lifting lugs, base ring, drains, charging connections, piping connections, and specialties as required for bladder replacement and as indicated on the Drawings. Factory charged tanks. Each tank shall have an ASME relief valve set at the appropriate pressure.

E. Paint the outside of the tank with a shop coat of approved rust-inhibiting primer after fabrication.

2.5 MANUAL AIR VENT

A. Construct from short vertical section of 2-inch diameter maximum or line size pipe to form air chamber. Provide 1/8-inch brass needle valve at top of chamber.

PART 3 - EXECUTION

3.1 INSTALLATION

A. Provide automatic air vents at high points of all piping and as required for removal of air from the system using 3/4-inch steel pipe suitable for the pressure service between the main pipe and inlet. Provide 3/8-inch OD hard drawn Type L copper tubing from vent outlet for overflow in case of defective action. Copper tubing shall run into a suitable drain. When vents are located above hung ceilings, connect all vent drains to a common drain main and pipe to nearest sink or floor drain. Provide 3/4-inch valve in the inlet line for servicing of automatic air vent. Manual vents may be substituted for automatic vents, at system high points, only as directed by the Engineer and where readily accessible.

B. Provide at each water heater not less than one 1/2-inch manual air vent.

05/03/13 PERMIT SET

C. Provide manual air vents located above ceilings with a soft tempered copper tube pigtail so that vent can be discharged into a bucket.

D. Provide relief valves at expansion tanks, pressure tanks and as indicated. Install relief valves in upright position with discharge piped to nearest floor drain.

E. System relief valve capacity shall equal makeup valve capacity. Equipment relief valve capacity shall exceed flow rating of connected equipment. Where one pipe vents several relief valves, cross-section area shall equal sum of individual vent areas.

END OF SECTION

05/03/13 PERMIT SET

SECTION 223300

DOMESTIC WATER HEATING SYSTEMS

PART 1 - GENERAL

1.1 WORK INCLUDED

A. Domestic water heaters
B. Miscellaneous water heating system accessories
C. Water testing kits

1.2 RELATED DOCUMENTS

A. Section 22 05 01 – Plumbing General Provisions
B. Section 22 05 48 – Vibration Isolation and Seismic Restraints for Plumbing
C. Section 22 07 19 – Insulation for Plumbing
D. Section 22 11 00 – Domestic Water Systems
E. Section 23 09 00 – Building Management System
F. Section 23 09 93 – Automatic Control Sequences

1.3 REFERENCE STANDARDS

Published specifications standards, tests or recommended methods of trade, industry or governmental organizations apply to work in this Section where cited below:

A. ANSI – American National Standards Institute
   1. ANSI Z21.10.3 a&b – 2008: Gas Water Heaters - Volume III, Storage Water Heaters with Input Ratings Above 75,000 BTU per Hour, Circulating and Instantaneous (includes Addenda 1 and 2)
   2. ANSI Z21.22b – 2001: Relief Valves for Hot Water Supply Systems
B. ASHRAE – American Society of Heating, Refrigerating and Air-Conditioning Engineers
   1. ASHRAE Standard 90.1 – 2007: Energy Standards for Buildings except Low-Rise Residential Buildings
   2. ASHRAE Standard 90.2 – 2007: Energy-Efficient Design of Low-Rise Residential Buildings
C. ASME – American Society of Mechanical Engineers
   1. ASME Standard for Boiler and Pressure Vessel Code – 2007
      a. ASME BPVC – I through XII
   2. ASME B16.10 – 2000 Revised 2003: Face-to-Face and End-to-End Dimensions of Valves
   3. ASME B16.34 – 2004: Valves – Flanged, Threaded and Welding End
   4. ASME B31.1 – 2007 Revised 2008: Power Piping
   5. ASME B31.9 – 2008: Building Services Piping
D. ASTM – American Society for Testing and Materials
   1. ASTM B 733 – 2004: Standard Specification for Autocatalytic (Electroless) Nickel-Phosphorus Coatings on Metal
   2. ASTM C 109 / C 109M – 2008: Standard Test Method for Compressive Strength of Hydraulic Cement Mortars (using 2-inch cube specimens)
   3. ASTM D 5162 – 2008: Standard Practice for Discontinuity (Holiday) Testing of Nonconductive Protective Coating on Metallic Substrates
E. AWWA – American Water Works Association
F. ETL – ETL SEMKO (formerly Edison Testing Laboratory)
G. FM – Factory Mutual Approvals LLC
H. ISO – International Organization for Standardization
   1. Reference ISO 9001 – 2008 revised 2009: Quality Management Systems – Requirements
I. MSS – Manufacturers Standardization Society of the Valve and Fittings Industry
   1. MSS SP-70-2006: Gray Iron Gate Valves, Flanged and Threaded Ends

05/03/13 PERMIT SET

2. MSS SP-80-2008: Bronze Gate, Globe, Angle and Check Valves

J. NFPA 70, Edition 08 – The California Electric Code 2010

K. NSF – National Sanitation Foundation
1. NSF 5-2009: Water Heaters, Hot Water Supply Boilers, and Heat Recovery Equipment
2. NSF/ANSI 61-2008: Drinking Water System Components – Health Effects

L. UL – Underwriters Laboratories Inc.
1. UL 795 – 2006 Revised 2009: Commercial-Industrial Gas Heating Equipment
2. UL 1453 – 2004 Revised 2009: Electric Booster and Commercial Storage Tank Water Heaters

M. California Energy Code – 2008 CCR – California Code of Regulations – Title 24 – Building Standards Code

N. California Plumbing Code – 2010 edition

O. Local Codes and Code Amendments

1.4 QUALITY ASSURANCE

A. Comply with the applicable provisions and recommendations of the standards and codes listed in Paragraph 1.03 and the requirements of the listed Related Documents.

B. Water Heaters Storage Tank Insulation: Comply with applicable requirements of ASHRAE Standard 90.1.

C. Storage Tanks / Pressure Vessels: Shall have the seal of American Society of Mechanical Engineers for compliance with ASME Code - Section VIII.

D. Storage Type Water Heaters: Shall have an independent laboratory listing for standards UL 795 and/or ANSI Z21.10.3b.

E. Storage Type Water Heaters: Manufacturer shall be ISO 9001 registered.

F. Valve construction shall be suitable for the pressure, temperature, and fluid quality of the service in which they are to be used.

G. All valves shall be manufactured in accordance with ANSI, AWWA, ASTM, and MSS-SP-70 & 80 (Manufacturers Standardization Society of the Valve and Fittings Industry) standards and specifications.

H. ASME B31.1 for power piping valves and ASME B31.9 for building services piping valves.

I. ASME B16.10 and ASME B16.34 for valve dimension and design criteria.

J. NSF Compliance: NSF 61 for valve materials for potable-water service.

K. Minimum test pressure for all valves shall be 1.5 times maximum system working pressure unless noted otherwise.

1.5 SUBMITTALS

A. Comply with requirements of Section 01 33 00 – Submittal Procedures, and as modified in Section 22 05 01 – Plumbing General Provisions.

B. Product Data: Submit manufacturer's latest product literature, including material specifications, construction details, rated capacity data, operating characteristics, installation data and other information required to demonstrate compliance with specified requirements for following items:
1. Water heaters
2. Pressure and temperature relief valves
3. Drain valves
4. Expansion tanks

C. Submit, for all equipment provided under this Section, dimensions, accessories, required clearances, electrical requirements and wiring diagrams specific to this project that clearly differentiate between manufacturer-installed and field-installed wiring, and location and size of all required field connections.

D. Submit manufacturer's installation instructions, operation data, start-up instructions, maintenance data, parts list and controls specific to this project, accessories and maintenance data.

05/03/13 PERMIT SET

E. Submit warranties, complete warranty and service policies, including all exclusions and conditions.

F. Submit Operational and Maintenance (O&M) manuals.

PART 2 - PRODUCTS

2.1 ACCEPTABLE MANUFACTURERS

A. Following is a list of manufacturers whose products may be submitted for review. All items submitted as being equal, shall have same quality, finish, free area, material construction, etc., as those specified under base specification.

B. Approved Manufacturers:
   1. Electric Water Heaters: A.O. Smith, PVI Industries, Patterson-Kelly.

2.2 ELECTRIC WATER HEATERS

A. Comply with Energy Conservation Standards, Title 24 approved, UL Listed. Refer to schedule on the Drawings for capacities and electrical characteristics.

B. 150 pounds per square inch working pressure for 5- through 50-gallon capacity, equipped with multi-anode system consisting of magnesium or aluminum anode and European style power anode, jacketed and insulated to meet ASHRAE 90.1 standards, 3-years' warranty; similar to "Model DEL 205" by A.O. Smith,

C. Immersion Heaters: Medium watt density elements in each immersion heater with Incoloy sheathing and ceramic terminal block. KW capacities and voltages shall be as scheduled on the Drawings.

D. Tank Features:
   1. Construction: Manufactured and stamped in accordance with ASME Code Section IV, hydrostatically tested at 188 psi minimum, and National Board Registered for 125 psi working pressure.
   2. Tank shall be cathodically protected with powered anodes.
   3. Liner: Glass, with an alkaline borosilicate composition fused to steel at 1600 degrees F.
   4. Hand-hole clean-out.
   5. Controls compartmented with hinged door enclosing:
      a. 120-volt control circuit transformer
      b. Override switches
      c. Indicating/Pilot lights
      d. Pressure limit switches
      e. Programmable economy-mode operation

E. Insulation: Factory-installed foam insulation with heat loss not to exceed ASHRAE Standard 90.1 and steel enclosure cover with factory-baked enamel finish over bonderized undercoat.

F. Accessories:
   1. Anodic protection.
   2. Factory-installed AGA/ASME rated temperature and pressure relief valve set at relief pressure of 125 psi.
   3. Low water cut-off probe to prevent energizing elements in the event of low water condition.

G. Domestic water heater shall be seismically braced as per Section 22 05 48 – Vibration Isolation and Seismic Restraints for Plumbing.

2.3 MISCELLANEOUS HEATING SYSTEM ACCESSORIES

A. Relief Valves:
   1. Pressure and Temperature Relief Valve: Bronze body and spring and diaphragm combination pressure and temperature type relief valves with test lever and automatically reseating type thermostatic element. Tested under ANSI Z 21.22b with ratings as certified and listed by AGA and rated relief capacities greater than water heater's BTU-per-hour input rating; by Watts.

2. Vacuum Relief Valve: Conformance with ANSI Z21.22b, CSA certified. Brass body and include a protective cap; “Model N36-M1” by Watts. Number “40L” by Watts for higher BTU-per-hour input ratings.

B. Thermal Expansion Tank:
1. Vertical steel expansion tank constructed and designed per ASME Code Section VIII, 125 psi working pressure, steel outer shell, rigid polypropylene liner, heavy-duty butyl rubber diaphragm and non-ferrous system connection tapping, suitable for potable hot water. Refer to schedule on the Drawings for size; by Amtrol, or Bell and Gossett.

PART 3 - EXECUTION

3.1 INSTALLATION

A. Pipe relief drain full size to spill over floor receptor or to other safe location.

B. Install water heater and accessories in full compliance with manufacturer's instructions and recommendations.

C. Install draft regulators in full compliance with manufacturer's instructions and recommendations.

D. Install seismic restraints on all water heaters per all applicable local and state codes. The use of solid non-flexible supply materials in lieu of seismic restraints is not acceptable.

E. Pressure and Temperature Relief Valves:
1. Provide adjustable bronze spring and diaphragm combination pressure and temperature type relief valves with test lever and automatically reseating type thermostatic element.
2. Pipe drain to spill over floor drain or to other safe location.
3. Locate on storage tank water heaters.

3.2 TESTING AND ADJUSTMENTS

A. Provide factory-authorized technician for system inspection and start-up, and verify proper installation of all water heaters.

END OF SECTION

05/03/13 PERMIT SET

SECTION 224000

PLUMBING FIXTURES

PART 1 - GENERAL

1.1 WORK INCLUDED

A. The work of this Section shall include, but is not limited to, the following:
   1. Water closets
   2. Urinals
   3. Lavatories
   4. Sinks
   5. Hydrants
   6. Miscellaneous fixtures

1.2 RELATED DOCUMENTS

A. Section 22 05 01: Plumbing General Provisions

B. Section 22 05 29: Supports, Hangers, Anchors and Sleeves for Plumbing

1.3 REFERENCE STANDARDS

A. ADA – Americans with Disabilities Act
   1. ADA Article 4.19.4 – Exposed Pipes and Surfaces

B. ANSI – American National Standards Institute
   1. ANSI/ASME A112.19.6 – 1995: Hydraulic Performance Requirements for Water Closets and Urinals
   2. ANSI/ASME A112.21.3M – 1985 Revised 1995: Hydrants for Utility and Maintenance Use
   3. ANSI Z124.3 – 2005: Plastic Lavatories
   4. ANSI Z124.6 – 2007: Plastic Sinks
   5. ANSI Z124.9 – 2004: Plastic Urinal Fixtures
   6. ANSI/ISEA Z358.1 – 2009: Standard for Emergency Eyewash and Shower Equipment
   7. ANSI Z535 Series – 2007: Safety Color Code - Environmental Facility Safety Signs - Criteria for Safety Symbols - Product Safety Signs & Labels and Accident Prevention Tags
   8. ANSI Z535 Color Chart – 2006: Safety Color Chart for Information and Use with ANSI Z535.1, Z535.2, Z535.3, Z535.4, Z535.5 and Z535.6
   9. ANSI Z535.1 – 2006: Safety Color

C. ASME – American Society of Mechanical Engineers
   1. ASME A112.18.1 – 2005: Plumbing Supply Fittings
   2. ASME A112.18.2 – 2005: Plumbing Waste Fittings
   3. ASME A112.18.3 – 2002 Reaffirmed 2008: Performance Requirements for Backflow Protection Devices and Systems in Plumbing Fixture Fittings
   4. ASME A112.19.1 – 2008: Enameled Cast Iron and Enameled Steel Plumbing Fixtures
   5. ASME A112.19.2 – 2008: Ceramic Plumbing Fixtures
   6. ASME A112.19.4 – 1994 Revised 2004: Porcelain Enameled Formed Steel Plumbing Fixtures
   7. ASME A112.19.6 – 1995: Hydraulic Performance Requirements for Water Closets and Urinals
   8. ASME A112.21.3 – 1985 Reaffirmed 2007: Hydrants for Utility and Maintenance Use

D. ASTM International – originally known as the American Society for Testing and Materials
   1. ASTM D 570 – 1998 Revised 2005: Standard Test Method for Water Absorption of Plastics
   2. ASTM D 638 – 2008: Standard Test Method for Tensile Properties of Plastics
   3. ASTM D 696 – 2008: Standard Test Method for Coefficient of Linear Thermal Expansion of Plastics between minus 30 degrees Celsius and 30 degrees Celsius with a Vitreous Silica Dilatometer
   4. ASTM D 785 – 2008: Standard Test Method for Rockwell Hardness of Plastics and Electrical Insulating Materials

05/03/13 PERMIT SET

5. ASTM E 84 – 2009: Standard Test Method for Surface Burning Characteristics of Building Materials

E. ASSE – American Society of Sanitary Engineering
1. ASSE 1001-2008 – Performance Requirements for Atmospheric Type Vacuum Breakers
2. ASSE 1011-2004 – Performance Requirements for Hose Connection Vacuum Breakers
3. ASSE 1019-2004 revised 2005 – Performance Requirements for Vacuum Breaker Wall Hydrants, Freeze Resistant, Automatic Draining Type
4. ASSE 1016-2005 – Performance Requirements for Automatic Compensating Valves for Individual Showers and Tub/Shower Combinations
5. ASSE 1017-2003 revised 2004 – Performance Requirements for Temperature Actuated Mixing Valves for Hot Water Distribution Systems
6. ASSE 1070-2004 – Performance Requirements for Water Temperature Limiting Devices

F. BOCA – Building Officials and Code Administrators International, Inc.
1. BOCA P 1203.4

G. ETL – ETL SEMKO (formerly Edison Testing Laboratory)

H. FM – Factory Mutual Approvals LLC

I. FDA – U.S. Food and Drug Administration: Code of Federal Regulations, Title 21, Volume 3
1. 21CFR175.300 - 2009 – Resinous and Polymeric Coatings

J. ISO – International Organization for Standardization
1. Reference ISO 9001 - 2009: Quality Management Systems - Requirements

K. MSS – Manufacturers Standardization Society of the Valve and Fittings Industry
1. MSS SP-70-2006: Gray Iron Gate Valves, Flanged and Threaded Ends
2. MSS SP-80-2008: Bronze Gate, Globe, Angle and Check Valves

L. NSF – National Sanitation Foundation
1. NSF 51-2009: Food Equipment Materials
2. NSF/ANSI 61-2008: Drinking Water System Components – Health Effects

M. UL – Underwriters Laboratories Inc.
1. UL 94 – 1996 Revised 2009: Tests for Flammability of Plastic Materials for Parts in Devices and Appliances
2. UL 723 – 2008: Test for Surface Burning Characteristics of Building Materials
3. UL 1951 – 1994 Revised 2008: Electric Plumbing Accessories

N. CCR – California Code of Regulations
1. Title 24 – Building Standards Code (The 2010 edition)

O. California Plumbing Code – 2010

P. Local Codes and Code Amendments

1.4 QUALITY ASSURANCE

A. Regulatory Requirements:
1. Water Conservation: Comply with the applicable provisions and recommendations of the following Codes:
   a. California Building Code 2010
   b. California Plumbing Code 2010
   c. California State Energy Conservation Standards and handicapped requirements Title 24
2. Comply with the applicable provisions and recommendations of the standards and codes listed in Paragraph 1.03 and the requirements of the listed Related Documents.

1.5 SUBMITTALS

A. For each fixture type indicated, submit fixture and trim materials; connections; arrangement; dimensions; and required clearances.

B. Product Data: Submit manufacturer's latest certified published data on construction details, capacity data, operating characteristics, pressure ratings, operating weights, furnished specialties, and accessories and installation data including seismic restraints.

05/03/13 PERMIT SET

C. Submit, for all equipment provided under this Section, dimensions, accessories and required clearances. Submit electrical requirements and wiring diagrams specific to this project that clearly differentiate between manufacturer-installed and field-installed wiring, and location and size of all required field connections.

D. Submit manufacturer's installation instructions, operation data, start-up instructions, maintenance data, parts list and controls specific to this project, accessories and maintenance data.

E. Submit warranties, complete warranty and service policies, including all exclusions and conditions.

F. Submit Operational and Maintenance (O&M) manuals.

1.6 MAINTENANCE

A. Extra Materials:
   1. Loose Key Handles: Provide and deliver to Owner at least ten (10) loose key handles for lavatory supplies and wall hydrants and yard hydrants. Obtain receipt and submit to Engineer.
   2. Spare Flush Valves: Provide and deliver to Owner two (2) spare flush valves of each type used. Obtain receipt and submit to Engineer.

1.7 PERFORMANCE REQUIREMENTS

A. Plumbing fixtures shall meet or exceed the performance requirements specified in this specification Section.

B. LEED Credit WE 3.1 and 3.2, Maximize water efficiency.

1.8 ENVIRONMENTAL OBJECTIVES

A. Owner has established environmental objectives and implementation strategies for this Project based upon the LEED Green Building Rating System™ California Green Building Standard Code (Cal Green), 2010 and local amendments.

B. Products that conform to requirements of the Environmental Objectives yet do not fully meet other requirements of this Section may still be considered for use at the sole discretion of the Owner and Engineer.

PART 2 - PRODUCTS

2.1 ACCEPTABLE MANUFACTURERS

A. Vitreous China Fixtures: American Standard, Kohler, TOTO, Duravit

B. Flush Valves: Sloan Valve, TOTO, Zurn

C. Closet Seats: Olsonite, Beneke, Church, Bemis

D. Carriers: Zurn, Josam, J.R. Smith

E. Stainless Steel Sinks: Elkay, Just

F. Faucets: Sloan, Chicago Faucet, Kohler, American Standard, Moen, Speakman, Symmons, T & S Brass

G. Traps, Stops, Supplies, Drains and Strainers: McGuire, Dearborn

H. Drain and Supply Insulation: McGuire, Truebro

I. Hose Bibbs, Wall Hydrants: Chicago Faucet, J.R. Smith, Woodford, Zurn

2.2 WATER CLOSETS

A. General Characteristics:
   1. Vitreous China: Unmarked, true and level, clear, smooth and bright. Warranted not to craze, color or scale.
   2. Trap ways no less than 2-1/4 inches to 2-1/8 inches in diameter and fully glazed.
   3. Water surface area no less than 10 inches by 12 inches.
   4. 100 percent factory-tested for hydraulic performance, and trap seal depth, meeting or exceeding ASME A112.19.2, ANSI/ASME A112.19.6, CSA B45.1 and a minimum ball pass diameter of 2 inches.

05/03/13 PERMIT SET

5. Fixture dimensions conforming to ASME A112.19.2.

B. Water Closet WC-1, HWC-1(ADA compliant): Wall Hung, Flush Valve – Operates at 30 psi:
1. Fixture: Vitreous china, white, wall hung, elongated, siphon jet action, 1.5-inch top inlet, designed for 1.28 gallon flush; similar to “CT708E(G)” by Toto
2. Flush Valve: Exposed, Hydro powered, adjustable sensor activated, 1.28 GPF (4.8 LPF), chloramines resistant rubber diaphragm, polished chrome plated, 3-second delay flush, manual override, vandal resistant stop cap, adjustable tailpiece, vacuum breaker: similar to TET1LN Series by Toto.The sensor range should be limited so that the water closet door movements and or individual walking back stall does not activate the valve.
3. Seat: Open front seat, elongated, white, heavy weight solid plastic, no cover, integrally molded bumper, stainless steel posts, self-sustaining check hinge, similar to SC 534
4. Support: Adjustable type no-hub cast iron carrier with rear anchor foot assembly and nipple length suitable for wall thickness and applicable fitting styles and patterns; i.e., right hand, left hand, single, back to back, vertical, horizontal, standard barrel, and long barrel; “Series 100 and Series 200-M51” by J.R. Smith or with 2-inch auxiliary no-hub inlet where appropriate for other plumbing fixture vertical pipe connections; similar to “Series 209” or “Series 219 - M51” by J.R. Smith.

C. General Characteristics:
1. Fixture dimensions conforming to ASME A112.19.2. and ANSI/ASME A112.19.6.

D. Urinal UR-1, HUR-1 (ADA compliant): Siphon Jet, wall hung:
1. Fixture: Vitreous china, white, wall hung, 3/4-inch top spud, siphon jet, integral flushing rim; barrier free similar to “UT105UG, 0.125 GPF,” by Toto.
2. Flush Valve: Exposed, Hydro powered, pressure compensating cartridge, adjustable sensor activated, 0.125 GPF (0.5LPF), polished chrome plated, 3-second delay flush, manual override, vandal resistant stop cap, adjustable tailpiece, vacuum breaker: similar to “TEU1UN Series-.0125 GPF” by Toto..The sensor range should be limited so that the door movements and or individual walking back stall does not activate the valve.
3. Support: 1.25-inch diameter uprights welded to 4-inch square steel floor anchor plates with top and bottom fixture bearing and fixture hangers sized to meet plumbing fixture rough-in dimensions and provided with bearing stud lengths that allow floor anchor plates to be installed within plumbing chase behind masonry or finished dry walls; similar to “637” by J.R. Smith.

2.3 LAVATORIES

A. General Characteristics:
1. Faucet:
   a. Lead-free brass materials and construction, UL Listed certifying conformance with NSF Standard 61, Section 9 test protocol for Residential/Drinking Water Faucets.
   b. Operating cartridges: Compression type that closes with water pressure or a ceramic disc type.
2. “P” Traps and water supplies at lavatories shall be insulated in accordance with Title 24 Handicapped Requirements, ADA guidelines

B. Lavatory L-1: ADA Compliant:
1. Fixture: Seamless die-drawn, Type 304, 6” deep, interior and top surfaces polished, fully coated underside under counter mount, with overflow, mounting kit with template, ADA compliant: similar to “UCIF-12” by Just.
2. Shroud: Fire Clay similar to “REVE - K 5031” by Kohler.
3. Faucet: Gooseneck single hole single hole touch-less 0.5 GPM (1.9LPM) multi-stream laminar spray head, a c sensor activated, set for 10 second cycle, hot and cold flexible supplies, 6 VDC lithium battery back-up, internal spout mixer, chrome plated similar to “K-13474” by Kohler. The sensor range should be limited so that the door movements and or individual walking back stall does not activate the valve.
4. Trap: Pre-wrapped 17 ga seamless cast brass slip nut P-trap and offset grid drain with overflow, adjustable P-trap less cleanout, riser and stop covers included, 1-1/2-inch x 1-1/2-inch (40mm x 40mm): similar to “PW2150NCO” by McGuire.

05/03/13 PERMIT SET

5. Stops and Risers: Chrome plated brass, rigid supplies, 3/8-inch (10mm) IPS inlet, chrome plated brass escutcheon, loose key stop: similar to “2165CCLK” McGuire.
6. Provide one mechanical mixing valve for a set of 3 lavatories.

2.4 SINKS

A. General Characteristics:
   1. Faucet: Brass Quality: Lead-free brass materials and construction, UL Listed certifying conformance with NSF Standard 61, Section 9 test protocol for Residential/Drinking Water Faucets.

B. Sink: SK-1:
   1. Fixture: Single compartment, SanaGloss Ceramic glaze, 19” x 12 3/8” front overflow, under-counter mounted bowl, similar to “LT542G” by TOTO.
   2. Faucet: Gooseneck single hole single hole touchless 0.5 GPM (1.9LPM) multi-stream laminar spray head, a c sensor activated, set for 10 second cycle, hot and cold flexible supplies, 6 VDC lithium battery back-up, internal spout mixer, chrome plated similar to “K-13474” by Kohler. The sensor range should be limited so that the door movements and or individual walking back stall does not activate the valve.
   3. Trap: 1½-inch x 1½-inch chrome plated cast trap with 17-gauge tubing waste to wall, cleanout plug and chrome plated cast brass set screw escutcheon; “No. 8912-F” by McGuire
   4. Stops and risers: Chrome plated angle supply with ½-inch x 12-inch rigid riser and ½-inch x ½-inch loose key stop and chrome plated cast brass escutcheon: “2167CCLK” McGuire.

C. MOP Sink: MS-1:
   1. Fixture: 28-inch by 28-inch, one piece enameled cast iron corner style mop receptor with 3” outlet and vinyl rim guard and flat grid strainer; similar to “7745.811” Florwell by American Standard.
      a. Faucet: Combination hose end faucet with brass vacuum breaker, integral stops, pail hook, top brace and rough chrome plated brass body and handle construction; similar to “8354.112” by American Standard.
      b. Removable rim guard: similar to “7745.811” by American Standard
      c. Stainless steel perforated strainer: similar to “7721.038” by American Standard

2.5 HYDRANTS

A. General Characteristics: Manufactured with “No lead” brazing rings and USDA-approved lubricants.

B. Wall Hydrant HB-1: Warm climate box type wall hydrant with integral vacuum breaker conforming to ANSI A112.21.3, without box 1/4-turn valve operation, similar to model no. 5618 by J.R. Smith

PART 3 - EXECUTION

3.1 INSTALLATION

A. Provide plumbing fixtures and trim as shown on the Drawings and as specified. Vitreous china fixtures shall be white, except as otherwise noted.

B. Provide each fixture with all required trim, including but not limited to carriers, supports, faucets, stops, waste fitting, traps, seats, flushometer, vacuum breaker, bolts, gaskets, and wall escutcheons.

C. Provide chromium-plated brass materials for exposed supplies, stops, valves, faucets, strainers, wastes, bolts, screws, bushings, traps and nipples, exposed piping and wall flanges plates and escutcheons.

D. Fixture traps shall be “P” Traps with or without cleanouts as specified.

E. During course of construction, cover exposed trim, fixtures and fittings with suitable protection. When directed, thoroughly clean fixtures and fittings.

05/03/13 PERMIT SET

F. Be fully responsible for protection of fixtures before and after inspection until final acceptance of the entire building by the Owner. The Contractor regardless of who caused the damage shall immediately replace any damaged fixture.

G. Provide fixtures free from imperfections; true as to line, angles, curves and color; smooth, and water-tight.

H. Alternate products shall have clearances, waterways and assembly equal to that of the plate number of the product selected.

I. Lavatory supports shall be furnished with lavatories for under-counter installation.

J. Provide chromium plated, cast brass wall escutcheons with set screws at supply and drain penetrations through walls and casework.

K. Provide chromium-plated brass materials for exposed supplies, stops, valves, faucets, strainers, wastes, bolts, screws, bushings, traps and nipples, etc.

L. Securely fasten and support supply and drain piping in pipe chases and walls to obtain rigid installation.

M. Vibration isolation of domestic water piping serving fixtures shall be as specified in specification Section 23 05 48 – Vibration Isolation and Seismic Restraints.

N. Securely fasten and support all fixtures. Provide blocking in walls as required to support fixtures. Conceal all supports. Use expansion shields or toggle bolts for fastening to masonry. Carefully drill holes to avoid chipping, cracking, etc. Paint exposed ironwork with enamel color as approved by the Engineer.

O. Furnish electrical power requirements for fixtures requiring power, including but not limited to connection type and rough-in location to electrical work install.

P. Provide sanitary sealant for fixture installations:
   1. Apply sealant to a clean and dry surface at temperatures between 20 and 90 degrees F. Use rubbing alcohol to clean surface before applying sealant. Cut opening on spout at desired angle to dispense sealant. Apply sealant with any standard caulking gun. Smooth off excess as recommended by manufacturer.
   2. Caulk between wall-hung vitreous china fixtures and wall with sanitary sealant.
   3. Caulk between self-rimming counter-mounted vitreous china fixtures and countertop of casework with sanitary sealant.
   4. Caulk between floor-set vitreous china fixtures and floor with sanitary sealant.
   5. Caulk between wall-mounted shower valve escutcheon plate and ceramic tile with sanitary sealant.
   6. Caulk between shower head wall plate and ceramic tile with sanitary sealant.
   7. Caulk between wall hydrant and wall opening with sanitary sealant.

Q. ADA-Compliant Installations:
   1. Install ADA-compliant plumbing fixtures in conformance with Title III of American Disabilities Act Guidelines and ASME Standard A112.19.2.
   2. Install ADA-compliant wall type water closets at 18 inches from finished floor to top of seat.
   3. Install ADA-compliant water closets with centerline of water closet at no less than 18 inches from adjacent wall with grab bar.
   4. Install ADA-compliant flush valve controls for water closets pointing to wide side of toilet area at no more than 44 inches above finished floor.
   5. Install ADA-compliant urinal at 17 inches from finished floor to rim of lip.
   6. Install ADA-compliant lavatories with bottom of fixture apron at no less than 29 inches above finished floor and minimum knee space of 27 inches from finished floor for distance of 8 inches from front of apron and with distance of finished floor to fixture basin rim set at 34 inches. Offset drain rough-in, right or left of standard drain rough-in location, to allow offset drain to be installed and “P” Trap centerline to be parallel with face of wall.
   7. Install ADA-compliant sinks in ADA-compliant casework supplied by Casework Installer. Locate sink casework cutout in countertop to allow drain, tailpiece, supplies and trap to be installed within casework. Coordinate sink cutout location, accessories, rough-in and connection dimensions with Casework Installer and casework shop drawings. Do not route piping through 9-inch high toe space clearance at base of cabinet.

05/03/13 PERMIT SET

8. Install ADA-compliant lavatory in ADA-compliant casework supplied by Casework Installer. Locate lavatory and accessories in countertop to allow drain, tailpiece, supplies and trap to allow for minimum knee space of 27 inches from finished floor for distance of 8 inches from front edge of counter. Coordinate accessories, lavatory cutout location, and rough-in and connection dimensions with casework shop drawings to meet the ADA installation criteria. Do not route piping though 9-inch high toe space clearance at base of cabinet.
9. Install ADA-compliant wash fountains with bottom of fixture apron at no less than 29 inches above finished floor and minimum knee space of 27 inches from finished floor for distance of 8 inches from front of apron.
10. Install ADA-compliant electric water coolers with spout orifice 3 feet-0 inches above the finished floor.
11. Install ADA-compliant drinking fountains with spout orifice 3 feet-0 inches above the finished floor.
12. .

R. Hydrants:
1. Establish location of wall hydrants rough-in and confirm wall-opening sizes with General Contractor.
2. Exterior Hydrant: Install centerline of wall hydrant at 1 foot-7 inches above finished floor, unless otherwise indicated.
3. Interior Wall Hydrant: Install centerline of wall hydrant at 1 foot-7 inches above finished floor, unless otherwise indicated.
4. Hose Bibs: Install hose bib with supply inlet centerline at 2 feet-0 inches above finished floor.

S. Faucets requiring Thermostatic Mixing Valves:
1. Locate below fixture and on wall.

END OF SECTION

05/03/13 PERMIT SET

SECTION 226313

NATURAL GAS SYSTEMS

PART 1 - GENERAL

1.1 DESCRIPTION

A. General: Provide gas systems in accordance with the Contract Documents.

1.2 REFERENCE STANDARDS

A. Comply with applicable provisions and recommendations of the following Codes:
   1. 2010 California Code of Regulations, Title 24 (California Building Standards Code)
   2. California Plumbing Code 2010
   3. Local Code and Amendments
   4. SDG&E Requirements
   5. NFPA 54-2009, National Fuel Gas Code

B. Provide gas systems in accordance with the intent of the Contract Documents. Install all gas services meter rigs, regulators, etc., in accordance with the provisions of gas serving company and obtain all necessary approvals.

C. Make arrangements to provide gas service into the building. Ascertain what materials and/or labor will be provided by the local utility company and/or other City authority and pay any fee in conjunction therewith.

D. Gas service contract limit line as indicated on the Drawings.

1.3 RELATED DOCUMENTS

A. Section 22 05 01: Plumbing General Provisions

B. Section 23 09 00: Building Management System (BMS)

PART 2 - PRODUCTS

2.1 BELOW GRADE PIPING AND FITTINGS

A. Piping: Polyethylene piping, with heat fusion weld joints, Type II, ASTM D 2513, ASTM D 2683, ASTM D 3261, PE 2406, where approved by local gas company standards.

1.	1 inch NTS	SDR 12.5
2.	1.25 inch NTS	SDR 13.9
3.	1.25 inch IPS	SDR 10
4.	2 inches IPS	SDR 11
5.	3 inches IPS	SDR 11.5
6.	4 inches IPS	SDR 11.5
7.	6 inches IPS	SDR 11.5
8.	8 inches IPS	SDR 11.5
9.	10 inches IPS	SDR 11.0

B. Transition Fittings: Steel to polyethylene pipe transition couplings and risers shall conform to ASTM D 2513 & D 2683 and ANSI B31.8 and DOT 192.121, ANSI B1.20, where applicable and meet design, material and construction standards of gas service company. Provide all accessories and fittings required for complete installation at building gas riser location available from Perfection Corporation, or Continental Industries.

C. Tracer Wire: Single conductor with green coating and minimum size No. 12 AWG stranded copper.

D. Buried Pipe Tape: 2 inches wide, safety yellow color code, heavy gauge 0.035-inch, detectable aluminum film including following text: “CAUTION Gas line buried below”.
   1. Acceptable manufacturers/products include:
      a. Seton Name Plate Company
      b. EMED Co., Inc., Buffalo, New York

05/03/13 PERMIT SET

c. Enterprises, Inc., Waterloo, Michigan
d. “Magnetec” by Thor Enterprises, Inc., Waterloo, Michigan

E. Underground at Service Entrance: Same as Above-ground covered with a flexible polymer film with coal tar and synthetic elastomeric coating of 36-mil thickness or extruded high-density polyethylene factory applied coating of 30 mil thickness. Wrap fittings with 10-mil polyethylene tape, ANSI A21.5, double layer, half-lapped. Minimum dielectric strength exceeding 12kV. Use compatible primer below polymer film or polyethylene tape.

2.2 ABOVE GRADE PIPING AND FITTING MATERIALS

A. General Characteristics for Threaded Pipe and Fittings:
1. Field Pipe Threading: Comply with National Fuel Gas Code “Table I Specifications for Threading Metallic Pipe” for length of threaded portion of pipe and number of threads to be cut.
2. Metallic Pipe and Fittings Threads: Taper pipe threads complying with Standard for Pipe Threads, General Purpose, ANSI/ASME B1.20.1.
3. Thread Compounds: Resistant to action of chemical constituents of gases to be conducted through piping systems and labeled by manufacturer accordingly.

B. Above Grade Interior Piping: ASTM A106 Gr B, or A-53 B seamless, Schedule 40, carbon steel pipe.

C. Above Grade Exterior Piping: ASTM A106 Gr B, or A-53 B seamless, Schedule 40, carbon steel pipe, hot dipped galvanized coating.

D. Fittings:
1. Pipe sizes 2.5 inches and smaller:
a. Interior 150# black malleable iron screwed fittings.
b. Exterior 150# black malleable iron screwed fittings with hot dipped galvanized coating.
2. Pipe Sizes 3 inches and larger:
a. Interior: Cast iron flanges, and vee-butt welded joints.
b. Exterior: Cast iron flanges, and vee-butt welded joints, primed coated and 2 coats of exterior grade paint.
3. Joints: Red or white lead and oil or approved pipe compound.

2.3 VALVES

A. Lubricated Plug Valves: UL Listed valves, ASTM-A-126 Grade B steel body and plug material, suitable for natural gas service and pressures up to 200 psi, with close tolerance between the plug and body sealing surfaces, reinforced Teflon stem seal, leak-proof spring loaded ball and lubricant sealed check valve; and combination lubricant screw and button head fitting to prevent foreign matter from being forced into lubricant system. Valve plugs are to be floated on low-friction Teflon surfaces for extra ease of turning – the lower surface to also act as a means of minimizing torsional stress in the spring – and are to have port area equal to 100 percent of the area of standard pipe. Valves are to be so constructed that lubricant system has sufficient pressure to force lubricant over all seating surfaces. Extruded Lubricant around stem is to be positive indication that lubricant system is full, and that there had been a minimum contamination of line fluids. Lubricant shall be suitable for hydrocarbons, L.P.G. and natural gas. Similar to the following:
1. Interior manual gas valves (1/2-inch to 2.5-inch size): Screwed ends, lever actuation, and lever handle; “Series 601” by Homestead® Valve Division of Olson Technologies.
2. Interior manual gas valves (3-inch to 6-inch size): Flanged ends, lever actuation, and lever handle; “Series 602 and 622” by Homestead® Valve Division of Olson Technologies.
3. Exterior manual gas valves (3-inch to 6-inch size): Permanently lubricated plug valve, lever actuation, and lever handle; “Roots Style 350” by DMD/Dresser.

B. Ball Valves (1/2-inch to 2-inch size): Bronze ball valve with B16 chrome plated brass ball and threaded ends; vinyl-coated steel handle; factory-tested under water with air pressure in open and closed positions. Listed by Underwriters Laboratories as natural gas shut-off valve and labeled accordingly; ”Series 80-100” by Apollo.

C. Check Valves: Bronze swing check valve with soft resilient disc, suitable for natural gas service; “B-320BC, Class 125, threaded ends, with BUNA-N Disc” by Stockham.

D. Earthquake Valve: Earthquake ball type actuated automatic gas shut off valve, listed by UL and Certified by California State Architect in accordance with ASCE 25-97, sized for minimum pressure drop of 0.1-inch water column at total connected gas load; “Koso/California Series 300” by Pacific Seismic Products.

2.4 PRESSURE REGULATING VALVES

A. 3/4-Inch Pipe Size:
1. Lower Diaphragm Case: Die cast aluminum with an exclusive 7-step advance conversion coating, single coat polyester and High Polyurethane Top Coat
2. Top Assembly: Die cast aluminum with an exclusive 7-step advanced conversion coating, single coat polyester primer and High Solid Polyurethane Top Coat
3. Pressure Spring: Steel, zinc plated and yellow chromate treated. Color coded for identification
4. Diaphragm Plate: Steel, plated
5. Seat Disc: Buna-N
6. Orifice: High strength, corrosion resistance, aluminum
7. Lever: Stamped aluminum
8. Seal Plug: Ultraviolet stabilized, mineral filled nylon
9. 3/4-inch pipe size
10. 5-inch w.c. to 7.5-inch w.c. outlet pressure regulation
11. Removable weather and bug-proof stainless steel screened 3/4 inch NPT vent to resist freeze-ups and to exclude foreign matter
12. Design Conditions: Inlet pressure 5 psi outlet pressure 7 inch w.c. with minimum capacity: 32 scfh
13. “S-253” by Fisher; or “CR-4000-180” by American Meter

B. 2-inch pipe size, flanged connections, spring color Green for 6 inch w.c. to 14-inch w.c. outlet pressure regulation, die cast aluminum alloy diaphragm case and cast iron body, diaphragm type regulator valve, internal control tube for pressure control, straight body with flow horizontal and vent outlet pointing downward. Provide regulator meeting following design conditions: inlet pressure 5 psi, outlet pressure 8 inch w.c. Capacity: 3350 scfh; “Model 3000” by Elster American Meter.

C. 2-inch pipe size, flanged connections, spring color Green for 6 inch w.c. to 14-inch w.c. outlet pressure regulation, die cast aluminum alloy diaphragm case and cast iron body, diaphragm type regulator valve, internal control tube for pressure control, straight body with flow horizontal and vent outlet pointing downward. Provide regulator meeting following design conditions: inlet pressure 1 psi, outlet pressure 14-inch w.c. Capacity: 7834 scfh; “Model 122-12” by Equimeter.

D. 1.5-inch pipe size, threaded connections, spring color Blue for 5 inch w.c. to 8.5-inch w.c. outlet pressure regulation, diaphragm type regulator valve, straight body with internal relief vent. Inlet pressure 14 inches w.c., outlet pressure 8 inches w.c. Capacity: 634 scfh; “Model 243-12 –1” by Equimeter.

2.5 GAS METER BY LOCAL UTILITY CO

2.6 MISCELLANEOUS

A. Vent Cap:
1. 3/4-inch to 1-inch pipe size: Aluminum body, built-in drip edge for rain and painter protection, full size venting sized to compensate for effective screen opening, stainless steel screen; similar to “Blo-Vent” by UPSCO.
2. 2-inch pipe size: 180-degree return bend steel end with 0.23 gauge stainless steel 12-inch by 12-inch mesh screen on outlet; “2-inch Return Bend” by UPSCO.
3. 1.25-inch to 4-inch pipe size: Iron body, 90-degree elbow with standard pipe thread with 12-inch by 12-inch mesh stainless steel screen on outlet; “Gas Vent” by UPSCO.

PART 3 - EXECUTION

3.1 INSTALLATION

A. Install piping without pockets, with drips at low points, and with valves at each outlet.

B. Use right and left nipples. Do not use bushings, unions and compression couplings.

C. Gas piping within the building below grade is to be run in casings or conduits and to be properly vented at both ends.

D. Gas piping run in plenum spaces, regardless of size to be welded and shall be run in a two-hour enclosure. No valves shall be installed in plenum spaces.

E. Provide dielectric union between buried steel gas piping using listed isolation fitting.

3.2 APPLICATION

A. Manual shut-off valves used on piping systems shall be as indicated for pipe sizes in PART 2.

B. Over-Pressurization Relief Valve: Provide capacity in valve for full relief capacity when pressure regulator fails in widest position and include vent pipe rising 7 feet-0 inches above grade.

C. Provide earthquake valve before gas line enters building and downstream of service exterior shut-off valve. Installation shall be in compliance with utility guidelines and not installed upstream of the gas meter or regulator unless approved by local utility company.

3.3 TESTING AND ADJUSTMENTS

A. Test the gas piping system by means of an air pump and mercury gauge to a pressure equal to the maintenance of a column of mercury 12 inches high for a period of 10 minutes. Conduct the test in the presence of all required inspectors.

B. Test under air pressure to 60 to 80 pounds per square inch for minimum one hour duration. Measure natural gas system test pressure with a water manometer or an equivalent device calibrated in increments not greater than 0.1 inch water column. System shall not be approved until it can be demonstrated that there is no measurable loss of test pressure during the test period.

C. Submit all test reports, witnessed by City Inspectors, to the Project Manager.

END OF SECTION

05/03/13 PERMIT SET

SECTION 230501

HVAC GENERAL PROVISIONS

PART 1 - GENERAL

1.1 DESCRIPTION

A. The General and Supplementary Conditions and Division 1 are a part of the requirements for the work under this Division of the Specification.

1.2 WORK INCLUDED

A. Provide labor and materials required to install, test and place into operation the heating, ventilating, air conditioning, plumbing and fire protection systems as called for in the Contract Documents and according to applicable codes and regulations.

B. Provide labor, materials and accessories required to provide complete operating mechanical systems as described or which may be reasonably implied as essential for a complete operating system.

1.3 QUALITY ASSURANCE

A. Comply with current governing codes, ordinances and regulations of the Authority or Authorities Having Jurisdiction over any part of the work and secure all necessary permits. Comply with the regulations and requirements of the Owner's insurance underwriter.

B. Where codes or standards are referenced, the applicable portions apply.

C. Drawings, specifications, codes and standards are minimum requirements. Where requirements differ, apply the more stringent.

D. Should any change in drawings or specifications be required to comply with governing regulations, notify the Engineer prior to submitting bid.

E. Execute work in strict accordance with the best practices of the trades in a thorough, substantial, skillful and well-executed manner by competent workers. Provide a competent, experienced full-time Superintendent who is authorized to make decisions on behalf of the Contractor.

F. The Engineer or Engineer's Representative may conduct unannounced field reviews of any work completed or in progress during the Contractor's working hours. A report will be issued to the Contractor if the field review of the mechanical, plumbing and fire protection systems construction has revealed elements of the work, which are inconsistent with the Contract Documents. All items in the report shall be addressed in writing by the Contractor within two (2) weeks and corrections in the field shall be made as directed.

1.4 ABBREVIATIONS AND DEFINITIONS

A. Abbreviations:

1. AABC Associated Air Balance Council
2. ABMA American Bearing Manufacturers Association
3. ADC Air Diffusion Council
4. AGA American Gas Association
5. AHRI Air Conditioning and Refrigeration Institute
6. AMCA Air Movement and Control Association
7. ANSI American National Standards Institute
8. ASA Acoustical Society of America
9. ASCE American Society of Civil Engineers
10. ASHRAE American Society of Heating, Refrigeration, and Air Conditioning Engineers
11. ASME American Society of Mechanical Engineers
12. ASTM American Society for Testing and Materials
13. EPA Environmental Protection Agency
14. ETL ETL SEMKO (formerly Edison Testing Laboratory)
15. FM Factory Mutual
16. IEEE Institute of Electrical and Electronic Engineers

05/03/13 PERMIT SET

17. ISO International Organization for Standardization
18. NEMA National Electrical Manufacturers Association
19. NFPA National Fire Protection Association
20. NIOSH National Institute for Occupational Safety and Health
21. NPT National Pipe Thread: Tapered
22. NSF National Sanitation Foundation
23. OSHA Occupational Safety and Health Administration
24. SMACNA Sheet Metal and Air Conditioning Contractors National Association
25. UL Underwriters Laboratories Inc.

B. Definitions:
1. Where it is stated in the specifications to submit to Architect or Engineer for review, refer to Architectural General and Special Conditions for proper procedures.
2. “PROVIDE” means to “Furnish” and “Install”.
3. “INSTALL” means to join, unite, fasten, link, attach, set up or otherwise connect together before testing and turning over to Owner, complete and ready for regular operation.
4. “FURNISH” means to supply all materials, labor, equipment, testing apparatus, controls, tests, accessories and all other items customarily required for the proper and complete application.
5. “AS DIRECTED” means as directed by the Engineer, or the Engineer's Representative.
6. “CONCEALED” means embedded in masonry or other construction, installed behind wall furring or within double partitions, or installed within hung ceilings.
7. “SUBMIT” means submit to the Engineer for review.

1.5 GUARANTEE

A. Submit a single guarantee stating that the work is in accordance with Contract Documents. Guarantee work against faulty and improper material, fabrication, installation, start-up and commissioning for a period of one (1) year from date of final acceptance by the Owner, except that where guarantees or warranties for longer terms are specified herein, the longer term shall apply. Correct any deficiencies, which occur during the guarantee period, within 24 hours of notification, at no additional cost to the Owner, to the satisfaction of the Owner. Obtain similar guarantees from subcontractors, manufacturers, suppliers and sub-trade specialists.

1.6 USE OF THE ARCHITECT’S AND ENGINEER’S DRAWINGS

A. The Contractor shall obtain, at the Contractor’s expense, from the Architect or Engineer a set of AutoCAD or compatible format architectural and engineering drawings on electronic media where desired by the Contractor and/or required by the Specifications for use in preparing the shop drawings, coordination drawings, and record drawings. The Contractor shall provide to the Architect and Engineer a written release of liability acceptable to the Architect and Engineer prior to receiving the electronic media files.

PART 2 - PRODUCTS

2.1 EQUIPMENT AND MATERIALS

A. Provide products and materials that are new, clean, free of defects and free of damage and corrosion.

B. Products and materials shall not contain asbestos, PCBs or any other material that is considered hazardous by the Environmental Protection Agency or any other Authority Having Jurisdiction.

C. Replace materials of less than specified quality and relocate work incorrectly installed as directed by the Engineer.

D. Statically and dynamically balance rotating equipment for minimum vibration and lowest operating noise level.

E. Provide name/data plates on major components of equipment with manufacturer’s name, model number, serial number, capacity data and electrical characteristics attached in a conspicuous place.

F. Install materials and equipment with qualified trades people.

05/03/13 PERMIT SET

G. Maintain uniformity of manufacture for equipment used in similar applications and sizes.

H. Applicable equipment and materials to be listed by Underwriters Laboratories and manufactured in accordance with ASME, AWWA, or ANSI standards, and as approved by Authorities Having Jurisdiction. The energy-using products shall be certified for use in the State of California and meet State energy efficient standards.

I. Fully lubricate equipment when installed.

J. Do not operate air systems until ductwork is complete, temporary filters are in place and construction debris is removed. Provide 1-inch thick fiberglass filter media across the face of each return air opening prior to start of each air system during temporary system operation and system clean-out.

K. Do not operate water or steam systems until piping has been cleaned and start-up strainers are in place.

L. Install floor-mounted equipment on a 4-inch high concrete pad. Concrete work shall be provided by another trade. Coordinate size and location with actual equipment used and accepted layout shop drawings.

M. Secure equipment with bolts, washers and locknuts of ample size to support equipment. Embedded anchor bolts to have bottom plate and pipe sleeves. Grout machinery set in concrete under entire bearing surface. After grout has set, remove wedges, shims and jack bolts and fill space with grout.

N. Locate valves, traps, damper operators, dielectric unions, access doors, etc., to be easily accessible, either in mechanical spaces or through access panels specified. Obtain Engineer's approval of access panel locations.

O. Follow manufacturers' recommendations and instructions for installing, connecting, and adjusting equipment. Provide a copy of such instructions at the equipment during installation.

P. Pressure vessels and relief valves shall be selected, built and labeled in accordance with ASME.

Q. Equipment capabilities, etc., are scheduled or specified for job site operating conditions. Equipment sensitive to altitude shall be derated with the method of derating identified on shop drawings.

2.2 ALTERNATIVE EQUIPMENT AND MATERIALS

A. Contract Documents are based on materials specified and on equipment manufacturers indicated. Acceptance of alternative equipment manufacturers does not relieve Contractor of the responsibility to provide equipment and materials, which meet the quality and performance as stated or implied in the Contract Documents.

B. Equipment manufacturers listed in individual sections are acceptable for this project, subject to requirements of Contract Documents.

C. Submit proposals to supply alternate materials or equipment, in writing, with sufficient lead time for review prior to the date equipment must be ordered to maintain project schedule. Reimburse Owner for costs associated with the review of the proposed alternative whether alternative is accepted or rejected.

D. Include revisions required to adapt alternatives in such proposals, including revisions by other trades. No increase in the contract price will be considered to accommodate the use of alternative equipment.

E. Wherever quality standards (such as serviceability, energy efficiency, longevity or durability) and operating results (such as noise levels, quantity delivered or pressure obtained) are specified or scheduled, or when the manufacturer and size of equipment, for which such operating results are published or determinable, is specified, the substitution being proposed must conform substantially to the quality and quantities specified or implied. The substitution must fit into available space conditions and must function properly in coordination with the rest of the system.

F. Proposed changes and substitutions of systems, equipment and manufacturers shall be submitted and include the following information with the proposal:

1. A description of the difference between the existing contract requirements and that proposed, the comparative features of each, and the effect of the change on the end result

05/03/13 PERMIT SET

performance. Include the impact of all changes on other contractors and acknowledge the inclusion of additional costs to other trades.

2. Schematic drawings and details to supplement the description.
3. A list of the contract requirements that must be revised if the change is accepted, including any specification revisions.
4. Complete list of materials and equipment proposed for use in the change.
5. Include a description and estimate of costs the Owner may incur in implementing the change, such as additional space requirements, permits, architectural and aesthetic impact, design costs, tests, permits evaluation, operating and support costs.
6. A projection of any effects the proposed change would have on collateral costs to the Owner.
7. A statement of the time by which a contract modification accepting the change must be issued, noting any effect on the contract completion time or the delivery schedule.
8. A statement indicating the reduction to the contract price if the Owner accepts the change. Be responsible for appropriate modifications to all trades.

PART 3 - EXECUTION

3.1 FEES

A. Pay all required fees and obtain required permits related to the mechanical installation.

B. Pay royalties or fees in connection with the use of patented devices and systems.

C. Provide controlled or witnessed inspection where required by Authorities Having Jurisdiction or by these specifications.

3.2 SUBMITTALS AND REVIEWS

A. Submit shop drawings, manufacturer's data, samples and test reports as specified.

B. Within two (2) months after notice to proceed by the Owner or Owner's Representative, or after execution of Owner/Contractor Agreement, submit a complete typed list of all mechanical equipment manufacturers and material suppliers for the equipment proposed to be provided on this project as well as names of all subcontractors.

C. Within three (3) months after notice to proceed by the Owner or Owner's Representative or after execution of Owner/Contractor Agreement, prepare an index of all submittals for the project. Include a submittal identification number, a cross-reference to the specification sections or drawing number, and an item description. Prefix the submittal identification number by the specification sections to which they apply. Indicate, on each submittal, the submittal identification number in addition to the other data specified. All subcontractors shall utilize the assigned submittal identification number.

D. After the Contract is awarded, obtain complete shop drawings, product data and samples from the manufacturers, suppliers, vendors, and all subcontractors, for all materials and equipment as specified. Submit data and details of such materials and equipment for review. Prior to submission, certify that the shop drawings, product data and samples are in compliance with the Contract Documents. Check all materials and equipment upon their arrival on the job site and verify their compliance with the Contract Documents. Modify any work, which proceeds prior to receiving accepted shop drawings as required to comply with the Contract Documents and the shop drawings.

E. Review of submittals is for general compliance with the design concept and Contract Documents. Comments or absence of comments does not relieve the Contractor from compliance with the Contract Documents. The Contractor remains solely responsible for details and accuracy, for confirming and correlating all quantities and dimensions, for selecting fabrication processes, for techniques of construction, for performing the work in a safe manner, and for coordinating the work with that of other trades.

F. No part of the work shall be ordered, procured, started in the shop or in the field until the shop drawings and samples for that portion of the work have been submitted, reviewed and returned with either "No Exceptions Noted" or "Exceptions Noted" marked on the submission.

05/03/13 PERMIT SET

G. A minimum period of ten (10) working days, exclusive of transmittal time, will be required in the Architect/Engineer's office each time a shop drawing, product data and/or samples are submitted for review. This time period must be considered by the Contractor in the scheduling of the work.

H. Submit three (3) bond prints of all items requiring shop drawings. Submit three (3) copies of manufacturer's product submittals. Two (2) copies of submittals will be returned. Additional copies are the responsibility of the Contractor. Electronic media will not be reviewed without prior approval by the Engineer.

I. Submissions will be stamped as follows:

Stamp	Interpretation
No Exceptions Noted	Fabrication, manufacture, or construction may proceed providing submittal complies with the Contract Documents.
Exceptions Noted: [ ] Resubmit for Record [ ] No Resubmission Required	Fabrication, manufacture, or construction may proceed providing submittal complies with the Contract Documents and Engineer's notations are complied with. Within this category are two options. A resubmission for our records is required when corrections are necessary. A resubmission is not required if there are only minor comments.
Revise and Resubmit	The submittal does not comply with the Contract Documents; do not proceed with fabrication, manufacture, or construction. The work and shop drawings are not permitted at the job site. Resubmit appropriate shop drawings.

J. Submit materials and equipment by manufacturer, trade name and model number. Include clear, legible copies of applicable brochure or catalog material. Maintenance and operating manuals are not suitable substitutes for shop drawings.

K. Identify each sheet of printed submittal pages (using arrows, underlining or circling) to show applicable sizes, types, model numbers, ratings, capacities and options actually being proposed. Cross out non-applicable information. Note specified features such as voltages, motor efficiencies, special tank linings, pump seals, materials or paint finishes. Cross out all references to "options". Cross out statements such as "subject to change without notice" or "not for construction". Anything not specifically excluded is assumed to be included.

L. Include dimensional data for roughing in and installation, technical data sufficient to verify that equipment meets requirements of the Contract Documents. Include wiring, piping and service connection data, motor sizes complete with voltage ratings, and schedules.

M. Maintain a complete set of the most current reviewed and stamped shop drawings and product data on site.

N. Prepare and submit detailed shop drawings for ductwork, piping work and other distribution services in minimum 1/4-inch to 1-foot scale, including elevations and locations and sizes of openings in floor decks, walls and roofs.

O. The work described in shop drawing and product data submittals shall be carefully checked by all trades for clearances (including those required for code compliance, maintenance and servicing), field conditions, maintenance of architectural conditions and proper coordination with other trades on the job. Each submitted shop drawing to include a certification that related field conditions and requirements have been checked by all Contractors and Subcontractors and that conflicts do not exist.

P. The Contractor is not relieved of the responsibility for dimensions or errors that may be contained on submissions or for deviations from requirements in the Contract Documents. The noting of some errors but overlooking others does not grant the Contractor permission to proceed in error. Regardless of any information contained in the shop drawings, product data and samples, the

05/03/13 PERMIT SET

Contract Documents govern the work and are neither waived nor superseded in any way by the review of shop drawings, product data and samples.

Q. Inadequate or incomplete shop drawings, product data and/or samples will not be reviewed and will be returned to the Contractor for resubmittal.

R. Indicate the following in the lower right hand corner of each shop drawing, and on the front cover of each product data brochure: the submittal identification number; title of the sheet or brochure; name and location of the Project; names of the Architect, Engineer, Contractor, Subcontractor, Manufacturer, Supplier, and Vendor; the date of submittal; and the date of each correction, version and revision. Number all pages and drawings in product data brochures, test reports or submittals consecutively from beginning to end. Unless the above information is included, the submittal will be returned for resubmission. Resubmittals of shop drawings or product data or brochures shall include a cover letter summarizing the corrections made in response to the review comments.

3.3 COORDINATION OF WORK

A. The Contract Documents establish scope, materials and quality but are not detailed installation instructions. Drawings are diagrammatic.

B. The Contract Documents show the general arrangement of equipment, ductwork, piping and accessories. Follow these drawings as closely as the actual construction and the work of other trades will permit. Provide offsets, fittings, and accessories, which may be required but not shown on the Drawings. Investigate the site and review drawings of other trades to determine conditions affecting the work and provide such work and accessories as may be required to accommodate such conditions.

C. Certain products will be provided by other trades. Examine the Contract Documents to ascertain the requirements for installation of these products.

D. Carefully check space requirements with other trades to insure that material can be installed in the spaces allotted.

E. Wherever work interconnects with work of other trades, coordinate with other trades to insure that they have the information necessary so that they may properly install the necessary connections and equipment. Identify items (valves, dampers, coils, etc.) requiring access in order that the ceiling and partition contractors can install access doors and panels in the correct locations.

F. Consult with other trades regarding equipment so that, wherever possible, motors, motor controls, pumps and valves are of the same manufacturer.

G. Furnish and set sleeves for passage of pipes, ducts and conduits through structural masonry and concrete walls, roofs and floors and elsewhere as will be required for the proper protection of each pipe and duct passing through building surfaces.

H. Install firestopping around all pipes, conduits, etc., which pass through rated walls, partitions and floors in strict accordance with the manufacturer's published approval listing and rating.

I. Provide detailed information on openings and holes required in structural elements and pre-cast panels or components for mechanical work.

J. Provide required structural or architectural supports and hangers for ductwork, piping and equipment, designed so as not to exceed allowable loadings of structures.

K. Examine and compare the Contract Drawings and Specifications with the drawings and specifications of other trades, report any discrepancies between them to the Engineer and obtain written instructions for changes necessary in the work. Install and coordinate the work in cooperation with other related trades. Before installation, make proper provisions to avoid interferences.

L. Wherever the work is of sufficient complexity, prepare additional detail drawings to scale to coordinate the work with the work of other trades. Detailed work shall be clearly identified on the Drawings as to the area to which it applies. Submit these drawings to the Engineer for review. At completion include a set of these drawings with each set of record drawings.

M. Before commencing work, examine adjoining work on which this work is in any way dependent and report conditions that prevent performance of the work. Become thoroughly familiar with

05/03/13 PERMIT SET

actual existing conditions to which connections must be made or which must be changed or altered.

N. Adjust location of pipes, ducts, panels, equipment, etc., to accommodate the work to prevent interferences, both anticipated and encountered. Determine the exact route and location of each pipe and duct prior to fabrication.
   1. Right-of-Way: Lines which pitch have right-of-way over those which do not pitch. For example: condensate, steam, and plumbing drains normally have right-of-way. Lines whose elevations cannot be changed have right-of-way over lines whose elevations can be changed.
   2. Provide offsets, transitions and changes in direction of pipes and ducts as required to maintain proper head room and pitch on sloping lines. Provide traps, air vents, drains, etc., as required to effect these offsets, transitions and changes in direction.

O. Install mechanical work to permit removal (without damage to other parts) of hydronic coils, heat exchanger, boiler or chiller tube bundles, heat exchanger plates, controls, fan shafts and wheels, smoke detectors, filters, belt guards, sheaves and drives, and any other parts requiring periodic replacement or maintenance. Arrange pipes, ducts, and equipment to permit access to valves, cocks, traps, starters, motors, and control components, and to clear the openings of swinging doors and access panels.

P. Changes in the cross-sectional dimensions of ductwork are permissible when required to meet job conditions. Maintain at least the same equivalent cross-sectional duct area in accordance with the latest edition of the ASHRAE Guide. Secure the approval of the Engineer prior to fabrication of ductwork requiring these changes.

Q. Provide access panels in equipment, ducts, etc., as required for inspection and maintenance of concealed or internal equipment, dampers, plenums, smoke detectors, humidifiers, controls, etc.

R. In cases of doubt as to the work intended, or in the event of need for explanation thereof, request supplementary instructions from the Engineer.

3.4 CONTRACTOR'S COORDINATION DRAWINGS

A. The Contractor shall coordinate efforts of all trades and shall furnish (in writing, with copies to the Engineer) any information necessary to permit the work of all trades to be installed satisfactorily and with the least possible interference or delay.

B. The Contractor and all trade contractors shall prepare a complete set of construction Coordination Drawings indicating the equipment actually purchased and the exact routing for all lines such as piping, conduit, ductwork, etc., including conduit embedded in concrete floors and walls. The Coordination Drawings shall be submitted complete to the Architect and the Engineer within three (3) months after notice to proceed is given and in compliance with the construction schedule for the project. The sheet metal drawings, at a scale of not less than 1/4-inch to 1-foot, shall serve as the base drawings to which all other Contractors shall add their work. Each separate Trade Contractor shall draw their work on separate layers with different color assignments to facilitate coordination. Each Coordination Drawing shall be completed and signed off by the other Trade Contractors and the Contractor prior to the installation of the HVAC, plumbing, electrical and fire sprinkler work in the area covered by the specific drawing. The Contractor's work shall be installed according to the shop drawings and Coordination Drawings. If the Contractor allows one trade to install their work before coordination with the work of other trades, the Contractor shall make all necessary changes to correct the condition at no additional cost to the Owner.

C. The Contractor's Coordination Drawings shall indicate structural loads at support points for all piping 10-inch and larger, racked piping, and racked conduit. Submit to Structural Engineer for review and approval. The elevation, location, support points, static, dynamic and expansion forces and loads imposed on the structure at support and anchor points shall be indicated. All beam penetrations and slab penetrations shall be indicated and sized and shall be coordinated. Work routed underground or embedded in concrete shall be indicated by dimension to column and building lines and shall be coordinated. Coordination Drawings shall document all required structural penetrations for initial construction. Penetrations shall be dimensioned for walls, floors and roofs. These structural coordination requirements require review and approval by the Structural Engineer prior to completion and submittal of the Drawings.

05/03/13 PERMIT SET

D. This requirement for Coordination Drawings shall not be construed as authorization for the Contractor or trade contractors to make any unauthorized changes to the Contract Documents. Contract document space allocations shall be maintained such as ceiling height, designated clearance for future construction and flexibility, chase walls, equipment room size, unless prior written authorization is received from the Engineer to change them.

E. Prior to final acceptance of the work, the Contractor shall submit the Coordination Drawings as part of the Record Drawing submittal.

3.5 EXAMINATION OF SITE

A. The Contract Documents do not make representations regarding the character or extent of the subsoils, water levels, existing structural, mechanical and electrical installations, above or below ground, or other sub-surface conditions which may be encountered during the work.

B. Evaluate existing conditions that may affect methods or cost of performing the work, based on examination of the site or other information. Failure to examine the Drawings or other information does not relieve the Contractor of responsibility for satisfactory completion of the work.

3.6 EXCAVATION AND BACKFILL

A. Provide excavation for the work of this Division. Excavate all material encountered, to the depths indicated on the Drawings or as required. Remove excavated materials not required or suitable for backfill from the site. Provide grading as may be necessary to prevent surface water from flowing into trenches or other excavations. Remove any water that accumulates. Provide sheeting and shoring as may be necessary for the protection of the work and for the safety of personnel.

B. Provide trenches of widths necessary for the proper execution of the work. Grade bottom of the trenches accurately to provide uniform bearing and support the work on undisturbed soil at every point along its entire length. Except where rock is encountered, do not excavate below the depths indicated. Where rock excavations are required, excavate rock to a minimum overdepth of four inches below the trench depths indicated on the Drawings or as required. Backfill overdepths in the rock excavation and unauthorized overdepths with loose, granular, moist earth, thoroughly machine tamped to a compaction level of at least 95 percent of standard proctor density or 75 percent relative density or as specified by the Engineer. Whenever unstable soil that is incapable of properly supporting the work is encountered in the bottom of the trench, remove soil to a depth required and backfill the trench to the proper grade with coarse sand, fine gravel or other suitable material.

C. Excavate trenches for utilities that will provide the required minimum depths of cover from existing grade or from indicated finished grade, whichever is lower, unless otherwise specifically shown.

D. Trenches shall not be placed within ten (10) feet of foundation or soil surfaces that must resist horizontal forces.

E. Do not backfill trenches until all required tests have been performed and the installation observed by the Engineer. Comply with the requirements of other sections of the specifications. Backfill shall consist of non-expansive material with limited porosity. Deposit backfill in 6-inch thick layers and tamp carefully until the mechanical work is covered by not less than 12 inches of material. Backfill and tamp remainder of trench at 1-foot intervals until complete. Uniformly grade the finished surface.

3.7 CUTTING AND PATCHING

A. Where cutting, channeling, or drilling of floors, walls, partitions, ceilings or other surfaces is necessary from the proper installation, support or anchorage of ductwork, piping or equipment, lay out the work carefully in advance. Repair any damage to the building, piping, equipment or finishes using skilled tradesmen for all required work.

B. Do not cut, channel or drill unfinished masonry, tile, etc. unless written permission is obtained from the Engineer. Perform this work in a manner acceptable to the Engineer.

05/03/13 PERMIT SET

C. Where ductwork, piping or equipment are mounted on a painted finished surface, or a surface to be painted, paint to match the surface. Cold galvanize bare metal whenever support channels are cut.

D. Provide slots, chases, openings and recesses through floors, walls, ceilings and roofs as required. Where these openings are not provided, provide cutting and patching to accommodate penetrations at no additional cost to the Owner.

3.8 PROHIBITED LABELS AND IDENTIFICATIONS

A. Prohibited Markings: In all public areas, tenant areas, storage areas and similar locations within the project, the inclusion or installation of any equipment, fixture or assembly which bears on any exposed surface any name, trademark, or other insignia which is intended to identify the manufacturer, the vendor, or other source(s) from which such object has been obtained, is prohibited.

B. Exception: Required Underwriters Laboratories labels shall not be removed nor shall identification specifically required under the various technical sections of the Specifications be removed.

3.9 EQUIPMENT PAD AND ANCHOR BOLTS

A. Provide concrete pads under all floor-mounted mechanical equipment. This includes electrical components, equipment mounted on legs and pipe support stands. Equipment pads shall conform to the shape of the piece of equipment it serves with a minimum 2-inch margin around the equipment and supports. Pads shall be a minimum of 4 inches high and made of a minimum 28-day, 2500-psi concrete reinforced with 6-inch by 6-inch 6/6-gauge welded wire mesh. Trowel tops and sides of pad to smooth finishes, equal to those of the floors, with all external corners bullnosed to a 3/4-inch radius. Use shop drawings stamped “NO EXCEPTIONS NOTED” or “EXCEPTIONS NOTED” for dimensional guidance in sizing pads.

B. Provide galvanized anchor bolts for all equipment placed on concrete equipment pads, inertia blocks, or on concrete slabs. Verify bolts size, number and embed depth recommended by the manufacturer of the equipment with seismic calculations as specified, and locate by means of suitable templates. Equipment installed on vibration isolators shall be secured. Secure the isolator to the floor, pad, or support as recommended by the vibration isolation and seismic restraint manufacturer.

C. Where equipment is mounted on gypsum board partitions, the mounting screws will pass through the gypsum board and be securely attached to the partition studs. As an alternative, the mounting screws may pass through the gypsum board and be securely attached to 6-inch square, 18-gauge galvanized metal backplates that are attached to the gypsum board with an approved non-flammable adhesive. Toggle bolts installed in gypsum board partitions are not acceptable.

3.10 DELIVERY, DRAYAGE AND HAULING

A. Include all drayage, hauling, hoisting, shoring and placement in the building of equipment specified and be responsible for the timely delivery and introduction of equipment to the project as required by the construction schedule. If any item of equipment is received prior to the time it is required, be responsible for its proper storage and protection until the time it is required. Pay for all costs of demurrage or storage.

B. If equipment is not delivered or installed at the project site in a timely manner as required by the project construction schedule, the Contractor shall be responsible for disassembly, re-assembly, manufacturer’s supervision, shoring, general construction modification, delays, overtime costs, etc., at no additional cost to the Owner.

3.11 EQUIPMENT AND MATERIAL PROTECTION

A. Protect the work, equipment and material of other trades from damage by work or workers of this trade, and correct damage caused without additional cost to the Owner.

B. The Contractor shall be responsible for all work, materials and equipment until finally inspected, tested and accepted. Protect work against theft, injury or damage; and carefully store material and equipment received on site that is not immediately installed. Close open ends of work with

05/03/13 PERMIT SET

temporary covers or plugs during construction to prevent entry of dust, dirt, water or other obstructing material. Cover and protect equipment and materials from damage due to water, moisture, humidity, paint, spray-on fireproofing, construction debris, etc. Store equipment subject to moisture damage, such as insulation or electrical components in dry heated spaces.

C. Provide adequate means for fully protecting finished parts of the materials and equipment against damage from whatever cause during the progress of the work until final acceptance. Protect materials and equipment in storage and during construction in such a manner that no finished surfaces will be damaged or marred, and moving parts are kept clean and dry. Do not install damaged items; take immediate steps to obtain replacement or repair. Replace all wet or damp insulation or acoustic lining.

3.12 ELECTRICAL EQUIPMENT AND ELECTRICAL ROOM PRECAUTIONS

A. Do not install piping, equipment or ductwork for heating, ventilation, air conditioning, plumbing or any piping systems not included as part of the electrical work, in the following rooms: switchgear, transformer, generator, elevator equipment, telephone, fire command, security, dimmer or electrical equipment rooms.

B. Do not install piping, equipment or ductwork above switchboards, disconnects, panelboards, dimmers, control panels, VFDs, motor control centers, individual motor controllers, electronics, etc or the code-required service space for these electrical devices.

3.13 EQUIPMENT GUARDS

A. Provide easily (without tools) removable expanded metal guards for all hot surfaces, belts, couplings, exposed fan inlets and outlets, and other moving parts of machinery. Provide tachometer openings in the guards at least 2 inches in diameter, for all belt-driven, gear-driven or variable speed machinery. Comply with OSHA requirements for all equipment guards.

3.14 LUBRICATION

A. Provide means for lubricating all bearings and other machine parts. If a part requiring lubrication is concealed or inaccessible, extend a metallic lubrication tube with suitable fitting to an accessible location and identify it with permanent laminated plastic nameplates. Identify this location in the maintenance manual.

B. After installation, properly lubricate all parts requiring lubrication and keep them adequately lubricated with a lubricant recommended by the equipment manufacturer until Owner acceptance.

3.15 DATE OF COMPLETION AND TESTING OF MECHANICAL SYSTEMS

A. Comply with the project construction schedule for the date of final performance and acceptance testing, and complete work sufficiently in advance of the Contract completion date to permit the execution of the testing prior to occupancy and the Contract closeout. Complete any adjustments and/or alterations that the final acceptance tests indicate as necessary for the proper functioning of all equipment prior to the completion date. See individual sections for extent of testing required.

B. Provide a detailed schedule of completion indicating when each system is to be completed and outlining when tests will be performed. Submit completion schedule for review within three (3) months after the notice to proceed by Owner or Owner's Representative has been given. Update this schedule periodically as the project progresses.

3.16 OPERATING INSTRUCTIONS AND OPERATOR TRAINING

A. Provide the services of factory-trained specialists to supervise the operation of all equipment and systems specified and train the Owner's operating and maintenance personnel for a three (3) day operating/instruction period. Operating instruction time is defined as straight time working hours and not including nights, weekends or travel time to and from the project. Refer to individual sections for additional training and instruction by manufacturer's trained specialists.

B. Notify the Owner in writing at least three (3) weeks before the operating/instruction period begins. Do not commence until the Owner has issued written acceptance of the starting time and schedule.

C. In addition to the operating/instruction period, organize and conduct a seminar to instruct the Owner's Representatives in the operation and general preventative maintenance of equipment and systems provided at the completion of the project.

D. Instruct Owner's operating personnel in proper starting sequences, operation, shut-down, and maintenance procedures, including normal and emergency procedures.

E. Make arrangements to give instructions by system and not by building areas.

F. Provide services of qualified personnel, including each sub-trade, each major equipment supplier to attend seminar and instruct on respective equipment or systems. Seminar shall be conducted by the Contractor and may be videotaped and attended by the Engineer or Engineer's Representative.

G. Submit seminar agenda, schedule and list of representatives to the Owner for review thirty (30) days prior to seminar. Confirm attendance at seminar by written notification to participants.

H. At seminar, submit final copies of record drawings and operating and maintenance manuals to Owner.

I. Submit a written record of the seminar, complete with an attendance list to the Owner.

3.17 OPERATING AND MAINTENANCE MANUALS

A. Provide operating instructions and maintenance manuals for all equipment and materials furnished under this Division.

B. Submit three (3) final copies of operating and maintenance data books for review at least ten (10) weeks before the completion date. Provide 8.5-inch by 11-inch, expanding spine catalog binders bound with heavy red fabric, hot stamp lettering on front and spine identifying project name and Owner's name. Assemble data in a completely indexed volume or volumes and identify the size, model, and features indicated for each item.

C. Index the maintenance manual according to the following system:

1. Tab – 1.0 Mechanical Systems: Title page identifying project, Owner, Contractor and Engineer with clear plastic protection cover.
2. Tab – 1.1 List of HVAC, Plumbing and Fire Protection Drawings.
3. Tab – 1.2 Description of Systems: Provide complete descriptions of the operating sequence for each system. Include detailed system description, with individual components described, and description of how components interface with others and to the complete system.
4. Tab – 1.3 Operating Division: Provide information on locations of components, how to energize switches and controls, how components interface with other components, operation of controls including operational sequence, operational changes for cooling, heating or changeover, how to accomplish the changeover, complete troubleshooting sequence, and failure and safeguards to indicate if equipment goes off-line.
5. Tab – 1.4 Maintenance and Lubrication Division: Provide general maintenance and lubrication schedule for major components and include daily, weekly, monthly, quarterly, semiannual and yearly checks and tasks. Explain how to execute maintenance tasks required for typical equipment such as bearings, drives, motors and filters. Compile this information for equipment separate from shop drawings.
6. Tab – 1.5 List of Equipment Suppliers and Contractors: Provide list of equipment suppliers and contractors, including street addresses, website addresses, fax and toll-free telephone numbers.
7. Tab – Certification (2.0, 2.1, etc.): Include copy of test data on degreasing and flushing of hydronic systems, analysis of system water taken at time system was put into operation, hydrostatic or air tests performed on piping systems, equipment alignment certifications, copy of balancing data for air and water systems, copy of valve and damper identification and pipe color code and inspection approval certificates from Authorities Having Jurisdiction.
8. Tab – Shop Drawings and Maintenance Bulletins (3.0, 3.1, 3.2, etc.): Provide material received in compliance with clause "Submittals and Reviews".

D. The manual divider and tabs shall be laminated mylar plastic and colored as follows:

Mechanical Systems	1.0	–	1.5	Orange
Certification	2.0	–	2.4	Green
Shop Drawings & Maintenance	3.0	–	3.17	Yellow

E. Plastic tabs with typewritten card insertions will not be accepted.

F. Maintenance information shall include complete lubrication, cleaning, and servicing data compiled in clearly and easily understandable format. Show model and serial number of each piece of equipment, complete lists of replacement parts, capacity ratings, and actual loads.

G. Provide the following equipment maintenance information where applicable:
1. Identifying name and number
2. Locations (where several similar items are used, provide a list)
3. Complete nameplate data
4. Parts list
5. Performance curves and data
6. Wiring diagrams
7. Lubrication charts
8. Manufacturers' recommended operating and maintenance instructions, with all non-applicable information deleted
9. List of spare parts recommended for normal service requirements
10. Assembly and disassembly instructions with exploded view Drawings, where necessary
11. Trouble shooting diagnostic instructions, where applicable

3.18 RECORD DRAWINGS

A. The Contractor shall maintain on a daily basis at the project site a complete set of Record Drawings. The Record Drawings shall initially consist of a set of blueline prints or AutoCAD files of the Contractor's Coordination Drawings. The prints shall be marked or the AutoCAD files electronically updated to show the precise location of all buried or concealed work and equipment, including embedded piping and valves, and all changes and deviations in the mechanical work from that shown on the Contract Documents. This requirement shall not be construed as authorization for the Contractor to make changes in the layout or work without definite written instructions from the Architect or Engineer. The updated Coordination Drawings shall be used to produce the final Record Drawings that shall be delivered to the Owner in AutoCAD electronic format media upon project completion.

B. Record dimensions clearly and accurately to delineate the work as installed. Suitably identify locations of all equipment by at least two (2) dimensions to permanent structures.

C. The Contractor and subcontractor shall mark all in-progress Record Drawings on the front lower right hand corner with a rubber stamp impression or an AutoCAD image similar to the following:

RECORD DRAWING
(3/8-inch high letters)

To be used for recording Field Deviations
and Dimensional Data Only
(5/16-inch high letters)

05/03/13 PERMIT SET

D. Upon completion of the work, the Contractor and subcontractors shall certify all Record Drawings on the front lower right hand corner adjacent to the above marking with a rubber stamp impression or an AutoCAD image similar to the following:

RECORD DRAWING
CERTIFIED CORRECT
(3/8-inch high letters)

(Printed Name of General Contractor)
(5/16-inch high letters)

Date:

(Printed Name of Subcontractor)
(5/16-inch high letters)

Date:

E. Prior to final acceptance of the work of this Division, the Contractor shall submit properly certified Record Drawings to the Architect and Engineer for review and shall make changes, corrections, or additions as the Architect and/or Engineer may require to the Record Drawings. After the Architect's and Engineer's review, and any required Contractor revisions, the Record Drawings shall be delivered to the Owner on electronic media in AutoCAD format. The Architect and Engineer do not assume any responsibility for the accuracy or completeness of the Record Drawings.

3.19 CERTIFICATION

A. Any certifications required by the Specifications, in addition to those required for shop drawings, product data, equipment and other items, are to be so certified in writing by the Owner, a Partner, or a Corporate Officer of the firm required to provide the Certification, or by another person duly authorized to sign binding agreements for and on behalf of the Owner, Partner or Corporation.

3.20 FINAL REVIEW

A. At a time designated by the Owner, the entire system shall be reviewed for compliance with the Contract Drawings and Specifications. Be available at all times during this review.

B. Demonstrate to the Owner and/or the Engineer's personnel prior to the Final Review that systems and equipment have been properly balanced and adjusted and are in compliance with the requirements of the Contract Documents. After these demonstration tests are satisfactorily completed, but prior to the Final Review, submit a written certification that: 1) attests to the Contract Document compliance for this project; and 2) certifies that the equipment and materials installed in this project contain no lead, asbestos or PCB. Prior to the final review, the Contractor shall confirm the following items regarding the status of key elements of the work. Negative responses to any of the items indicate that the construction is not substantially complete, and the building is not ready for a final review. The Contractor shall confirm the following in writing:

1. Building air systems (fans, air handling units, etc.) are completely installed, commissioned and operating.
2. Building hydronic systems are completely installed, commissioned, operating and pressure tested.
3. Building management system is installed, commissioned and operating.
4. Building has normal electrical power.
5. The emergency or stand-by power system has been started up, commissioned, and is standing by.
6. Building systems have been cleaned.
7. Seismic restraints have been inspected as specified. Any required special inspections have been completed.

05/03/13 PERMIT SET

8. Building systems have been balanced and copy of balance report submitted to the Engineer.
9. Building fire and life safety systems have been tested and accepted by the local authorities. Any required special inspections have been completed.
10. All final wiring connections have been rechecked.
11. All base building lighting systems are completely installed and operating.
12. The domestic cold water system has been installed, flushed, disinfected, tested and operating.
13. The domestic hot water systems are completely installed, flushed, disinfected, tested and operating.
14. The sanitary sewer and storm sewer systems are completely installed, operating, connected to the required city, public or private utilities and pressure tested.
15. The fire protection systems are completely installed, operating, connected to the required city, public or private utilities and pressure tested.
16. There are no deviations or non-compliance with the Contract Documents; otherwise, provide a detailed account of any and all deviations or non-compliance.
17. All items on field review reports have been responded to in writing and are resolved to the satisfaction of the Owner.
18. All outstanding items on submittals and shop drawings have been addressed in writing and are resolved to the satisfaction of the Owner.
19. Schedule the final review only after providing written confirmation of all items above. Provide a minimum of ten (10) days notice.

C. Operate the entire system properly with all systems balanced and all controls adjusted.

D. Certificates and Documents required by the Contract shall be presented to the Engineer at least two (2) weeks prior to the Final Review.

E. After the Final Review, any changes or corrections noted as necessary for the work to comply with the Contract Documents shall be accomplished without delay in order to secure final acceptance of the work.

3.21 EARLY OCCUPANCY

A. Be responsible for completing those systems, which are necessary to allow partial occupancy of the building even if systems in the unoccupied areas are incomplete.

B. Verify and comply with requirements for temporary occupancy with the local Building Department.

END OF SECTION

05/03/13 PERMIT SET

SECTION 230513

ELECTRIC MOTORS FOR HVAC EQUIPMENT

PART 1 - GENERAL

1.1 WORK INCLUDED

A. The work of this Section shall include, but is not limited to the following:
   1. Constant speed, variable speed and two-speed squirrel cage, polyphase electric induction motors for mechanical equipment.
   2. Provide electric motors designed and rated for use on Alternating Current Variable Frequency Drives (VFD) where applicable.

1.2 RELATED DOCUMENTS

A. Section 23 05 01 – HVAC General Provisions

B. Section 23 05 14 – Variable Frequency Drives for HVAC

C. Section 23 05 48 – Vibration and Seismic Controls for HVAC

D. Section 23 33 19 – Acoustics

E. Division 26 – Electrical Specifications

1.3 REFERENCE STANDARDS

A. Institute of Electrical and Electronic Engineers (IEEE)
   1. ANSI/IEEE 112 - 2004: Standard Test Procedure for Polyphase Induction Motors and Generators

B. National Electrical Manufacturers Association (NEMA)
   1. ANSI/NEMA MG-1 - 2006 Revised 2007: Motors and Generators

C. National Fire Protection Association (NFPA)
   1. ANSI/NFPA 70 - 2008: National Electric Code (NEC)

D. Underwriters Laboratories Inc. (UL)

1.4 QUALITY ASSURANCE

A. Electrical Coordination
   1. All starters, overload relay heater coils, disconnect switches and fuses, relays, wire, conduit, pushbuttons, pilot lights, and other devices required for the control of motors or electrical equipment are provided as specified by Division 26.
   2. Division 26 drawings and specifications show number and horsepower rating of all motors furnished by this Contractor. Should any discrepancy in size, horsepower rating, electrical characteristics or means of control be found for any motor or other electrical equipment after contracts are awarded, Contractor shall immediately notify the Engineer of such discrepancy. Refer to Section 23 05 01 - HVAC General Provisions.
   3. Furnish project-specific wiring diagrams to Division 26 Contractor for all equipment and devices furnished under this Section.

B. Motors intended for variable speed applications shall have UL approval for use on “Generic” pulse width modulated and/or 6-Step waveforms. Motors requiring one specific manufacturer of VFD to meet the UL criteria are not acceptable.

C. Motors shall conform to applicable requirements of ANSI, IEEE, NEMA, and NEC standards and shall be UL Listed for the service specified.

D. Furnish motors for starting in accordance with utility requirements and compatible with starters as specified.

1.5 SUBMITTALS

A. Submit motors under the sections covering the driven equipment.

B. Submit motor efficiencies at full load, 75 percent full load, and 50 percent full load.

05/03/13 PERMIT SET

C. Submit certified dimensions, insulation class, NEMA frame size, materials of construction, base details and mounting details.

D. Include, with the motor-driven equipment submittal, the following motor information: manufacturer, horsepower, voltage, phase, hertz, rpm, full load efficiency. Include project-specific wiring diagrams prepared by the Contractor specifically for this work.

E. Include manufacturer's instructions in the operating and maintenance manuals for the specific equipment. Include the following information, if not previously documented on shop drawings: full load power factor, service factor, NEMA design designation, insulation class, frame type.

PART 2 - PRODUCTS

2.1 ACCEPTABLE MANUFACTURERS

A. Constant Speed Applications: Toshiba Model E.Q.P., Magnetek E-Plus III, Baldor Super E, Reliance XE Premium, General Electric Energy Saver, Marathon Series E

B. Inverter Duty Motors: U.S. Electrical Motors “Inverter Grade”®, Baldor “Inverter Drive”®, or approved equal

2.2 GENERAL

A. Provide electric motors for driving the mechanical equipment. Motors shall be of proper power, construction and speed to suit the specified manufacturers of equipment. If other manufacturers of equipment are accepted, the proper adjustment of motor speed, torque and power must be included without additional cost. Submit drawings for review before the equipment is purchased.

B. One-half horsepower and larger motors shall be rated 200 VAC and suitable for operation on a 208 VAC (plus or minus 5 percent) – 3-phase – 60 hertz nominal electrical supply system.

C. Fan coil unit and fan powered terminal unit motors shall be rated 277 VAC – single phase – 60 hertz and shall be provided with integral thermal overload protection.

D. One-third horsepower and smaller motors shall be rated 120 VAC – single phase – 60 hertz and shall be provided with integral thermal overload protection.

E. Motors shall be generally constant speed, squirrel-cage type, open drip-proof or totally enclosed fan cooled (TEFC) design. Single phase motors shall be high efficiency capacitor start, induction run, or split phase type as approved for the service.

F. Motor temperature rise when operating on a variable frequency drive shall not exceed Class F insulation limits at full load, with 115 degrees C allowable winding hot spot temperature, across its nameplate speed and torque envelope. Sine-wave temperature rise shall be Class F or better.

G. Motors shall have minimum Class B insulation for continuous full load duty at 40 degrees C and a maximum altitude of 3300 feet above sea level. Where normal operating temperatures will exceed the Class B insulation rating, provide Class F insulation. For all motors driven by variable frequency drives, provide Class H insulation.

H. Motors shall be of quiet operating type, guaranteed to fulfill the specified requirements without producing any objectionable sound exceeding room NC levels as specified. All belt-connected motors shall have adjustable bases and set screws to maintain proper belt tension. Provide proper belt guards, in accordance with OSHA Standards.

I. Motors and accessories shall be UL Listed and comply with NEMA standards.

J. Minimum Service Factor:
   1. Constant speed applications: 1.15.
   2. Variable speed application: Nameplate sine-wave service factor shall be 1.15 or greater.

K. Coordinate the NEMA type of each motor with the torque and inertia load of the equipment served, and the in-rush current characteristics of the motor with the motor starter selection, so that all items furnished constitute a complete motor control and protection package. Motor shall not operate in the 15 percent service factor range.

L. Motors located in ducted air streams or subject to outside air elements shall be totally enclosed fan cooled; others shall be open drip-proof design. Motors one horsepower or larger shall have encapsulated stator windings of the epoxy or silicone type.

05/03/13 PERMIT SET

M. Fan motors shall be capable of accelerating their respective fans from zero revolutions per minute to design or synchronous revolutions per minute within a maximum of ten seconds.

N. All motors 1/2 horsepower and larger, except two-speed motors, specially wound motors and in-line pump motors frame size 56 and smaller, shall be high efficiency design with full load efficiencies (in percent) which meet or exceed the values listed below when tested in accordance with NEMA MG:

MOTOR EFFICIENCY BY MOTOR SIZE AND SPEED						
Horsepower	1200 rpm		1800 rpm		3600 rpm	
	ODP	TEFC	ODP	TEFC	ODP	TEFC
1/2 and 3/4	80.0	80.4	82.1	82.7	79.1	78.5
1	82.5	82.5	85.5	85.5	80.0	85.5
1.5	86.5	87.5	86.5	86.5	85.5	86.5
2	87.5	88.5	86.5	86.5	86.5	88.5
3	89.5	89.5	89.5	89.5	86.5	89.5
5	89.5	89.5	89.5	89.5	89.5	91.0

O. Each motor shall be factory-wired to a junction box mounted on the motor or on the driven piece of equipment to facilitate single point of field power connection under Division 26.

2.3 TWO-SPEED MOTORS

A. Advise Division 26 Contractor and verify availability of speed combinations for all two-speed motors. Verify motor starter compatibility for two-speed, two winding and/or two-speed, single-winding.

B. Unless otherwise indicated, three-phase two-speed motors shall be two winding, variable torque and single phase motors shall be capacitor start capacitor run type having two capacitors in parallel with run capacitor remaining in circuit at operating speeds.

PART 3 - EXECUTION

3.1 INSTALLATION

A. When motor will be flexible coupled to the driven device, mount coupling to the shafts in accordance with the coupling manufacturer's recommendations. Using a dial indicator, check angular misalignment of the two shafts; adjust motor position as necessary so that the angular misalignment of the shafts does not exceed 0.002 inches per inch diameter of the coupling hub. Again using the dial indicator, check the shaft for run-out to assure concentricity of the shafts. Adjust as necessary so that run-out does not exceed 0.002 inches. Set all direct driven equipment with not more than one-half of the coupling manufacturer’s recommended maximum tolerance for parallel and angular variance in alignment.

B. Align all belt-driven equipment to provide minimum wear on belts and drives, with belts properly tensioned.

C. Mount motors on a rigid base designed to accept a motor, using shims if required under each mounting foot for a secure and level installation.

D. When motor will be connected to the driven device by means of a belt drive, mount sheaves on the appropriate shafts in accordance with the manufacturer's instructions. Use a straight edge to check alignment of the sheaves; reposition sheaves as necessary so that the straight edge contacts both sheave faces squarely. After sheaves are aligned, loosen the adjustable motor base so that the belt(s) can be added and tighten the base so that the belt tension is in accordance with the drive manufacturer's recommendations. Frequently re-check belt tension and adjust if necessary during the first day of operation and again after 80 hours of operation.

3.2 START UP

A. Coordinate overload heater requirements with motor starter provider.

B. Verify the proper rotation of each three-phase motor as it is being wired or before the motor is energized for any reason.

05/03/13 PERMIT SET

C. Lubricate all motors requiring lubrication. Record lubrication material used and the recommended frequency of lubrication. Include this information in the maintenance manuals.

END OF SECTION

05/03/13 PERMIT SET

SECTION 230529

HANGERS AND SUPPORTS FOR HVAC

PART 1 - GENERAL

1.1 WORK INCLUDED

A. The work of this Section shall include, but is not limited to, the following:
   1. Pipe, duct and un-isolated equipment hangers, anchors and supports.
   2. Sleeves, escutcheons.
   3. Through-penetration firestopping in fire-rated construction and through-penetration smokestopping in smoke partitions, including methods and materials applied in penetrations and unprotected openings to limit spread of heat, fire, gasses and smoke.

1.2 RELATED DOCUMENTS

A. Section 23 05 01 - HVAC General Provisions

B. Section 23 05 48 - Vibration and Seismic Controls for HVAC

C. Section 23 07 00 - HVAC Insulation

D. Section 23 23 00 - Refrigerant Piping

E. Section 23 31 00 - HVAC Ducts and Casings

1.3 REFERENCE STANDARDS

Published specifications standards, tests or recommended methods of trade, industry or governmental organizations apply to work in this Section where cited below:

A. ANSI – American National Standards Institute
   1. ANSI/ASME B31.1 – 2007 Revised 2008: Power Piping

B. ASME – American Society of Mechanical Engineers
   1. ASME B16.19 – 2007: Factory-Made Wrought Butt-Welding Fittings

C. ASTM – American Society for Testing and Materials
   1. ASTM A 123 / A 123M – 2009: Standard Specification for Zinc (Hot-Dip Galvanized) Coatings on Iron and Steel Products
   2. ASTM B 695 – 2004: Standard Specification for Coatings of Zinc Mechanically Deposited on Iron and Steel
   3. ASTM C 1107 / C 1107M – 2008: Standard Specification for Packaged Dry, Hydraulic-Cement Grout (Nonshrink)
   4. ASTM E 814 – 1996 Revised 2009: Standard Test Method for Fire Tests of Penetration Firestop Systems

D. CIE/DIN Age Testing
   1. Commission Internationale de L'Éclairage (CIE)
      a. CIE 170-1:2006 – Fundamental Chromaticity Diagram with Physiological Axes
   2. Deutsches Institut für Normung (DIN)

E. ISO – International Organization for Standardization
   1. ISO 9001 – 2008: Quality Management System Requirements

F. MSS – Manufacturers Standardization Society of the Valve and Fittings Industry Inc.
   1. SP-58-2002: Pipe Hangers and Supports - Materials, Design and Manufacturer
   2. SP-69-2003: Pipe Hangers and Supports - Selection and Application
   3. SP-89-2003: Pipe Hangers and Supports - Fabrication and Installation Practices

G. UL – Underwriters Laboratories Inc.
   1. UL Standard 1479 – 2003 Revised 2008: Fire Tests of Through-Penetration Firestops
   2. UL Fire Resistance – 2009: Fire Resistance Directory set
      a. Through-penetration firestop devices (UL-XHCR)
      b. Fire resistance ratings (UL-BXUV)
      c. Through-penetration firestop systems (UL-XHEZ)

05/03/13 PERMIT SET

d. Fill, void, or cavity material (UL-XHHW)

3. UL Building Materials – 2009: Building Materials Directory
4. UL Component Listing Test Criteria
5. Warnock Hersey Mark (Certification of Building Products)

H. California Building Code

I. California Fire Code

1.4 QUALITY ASSURANCE

A. Hangers and supports to be constructed and applied according to the following standards:
1. Power Piping: ANSI/ASME B31.1.
2. Duct Hangers: Provide hangers as required per SMACNA Standards for ductwork pressure classification.
3. Firestopping materials shall have been tested to provide fire rating at least equal to that of the construction.
4. Deliver products in original, unopened packaging with legible manufacturer's identification.
5. Mechanical sleeve seals shall be manufactured in an ISO 9001:2008 certified facility.
6. Submit written guarantee agreeing to repair or replace joint sealers which fail in joint adhesion, extrusion resistance, migration resistance, or general durability or appear to deteriorate in any other manner not clearly specified by submitted manufacturer's data as an inherent quality of the material for the exposure indicated. The guarantee period shall be one year from date of substantial completion.

1.5 SUBMITTALS

A. Include on ductwork and piping shop drawings a layout of masonry and concrete floor and wall sleeve locations for pipes and ducts. Include elevations and sleeve sizes.

B. Submit product data on through-penetration firestop. Submittal data for firestopping systems shall include the UL System Numbers listed in the UL Building Materials Directory under which the material was tested in accordance with ASTM E 814 (UL 1479) for use in a Through-Penetration Firestop System. Where there is a firestop application that has not been tested by UL, obtain from the manufacturer an engineered judgment that the proposed application of the firestop product is suitable. Submit the engineered judgment to the Authority Having Jurisdiction.
1. Product Data: Manufacturer's specifications and technical data including detailed specification of construction and fabrication, manufacturer's installation instructions and details of each proposed assembly identifying intended products and applicable UL system number or UL classified devices.
2. Shop Drawings: Indicate dimensions, description of materials and finishes, general construction, specific modifications, component connections, anchorage methods, hardware, and installation procedures, plus the following specific requirements:
   a. Manufacturer or manufacturer's representative shall provide qualified engineering judgments and drawings relating to non-standard applications as needed.

C. Submit details of hangers, anchors and supports for each pipe size and service, ductwork and individual pieces of equipment.

D. Submit joint sealer guarantee as described in sub-Clause 1.04, A.6.

E. Submit load calculations for multiple or trapeze pipe hangers as required in Clauses 2.02, B. and 3.01, S.

F. Submit ICBO Evaluation Reports as required in Clause 3.01, D.

G. Submit shop drawings indicating support methods, point loadings, etc. as described in Clause 3.01, E.

PART 2 - PRODUCTS

2.1 ACCEPTABLE MANUFACTURERS

A. Pipe Hangers: Anvil, Fee & Mason, Elcen, Tube-Turn, F&S, Pipe Shields, B-Line Kindorf, Michigan Hanger, Power Strut, Unistrut, or approved equal. Anvil figure numbers are listed below; equivalent material by specified manufacturers is acceptable.

B. Sleeves: Pipe Shields, Insul, RK Industries

C. Pipe Wrap Tape: Polycen, Nassua, 3M

D. Firestop: Nelson, Dow, 3M, Hilti

E. Escutcheon Plates: Beaton & Corbin Manufacturing

2.2 GENERAL

A. Provide hangers of heavy construction suitable for the size of pipe to be supported. Materials shall be of steel, except pipe rolls of wrought or malleable iron.
   1. Hangers for pipes six-inches or less shall be swivel ring, wrought pipe clamp, or adjustable wrought clevis type. Anvil Figure 260, MSS-SP-69, Type 1.
   2. Hangers for ductile iron or cast iron pipes four-inches or less shall be swivel ring, wrought pipe clamp or adjustable wrought clevis type. Anvil Figure 590, MSS-SP-69, Type 1.
   3. When an oversized clevis type hanger is used (i.e., insulate pipe) a pipe spacer shall be placed over the clevis bolt as a spacer to assure that the lower U-strap will not move in on the bolt.

B. Multiple or trapeze pipe hangers shall be steel channels with welded spacers and hanger rods if hanger load calculations are submitted.

C. Wall support shall be welded steel bracket with hanger.
   Light Duty Wall Support: Anvil Figure 194, MSS-SP-69, Type 31.
   Medium Duty Wall Support: Anvil Figure 195, MSS-SP-69, Type 32.
   Heavy Duty Wall Support: Anvil Figure 199, MSS-SP-69, Type 33.

D. Metal Framing Channels:
   1. Provide perforated epoxy painted finish, 12-gauge minimum steel channels securely anchored to wall structure with interlocking, split type, bolt-secured, galvanized pipe/tubing clamps. B-Line type B22, S pattern with B-2000 series clamps, Power-Strut Type PS200 H with PS 1200 clamps or equal.
   2. When copper piping is being supported, provide flexible elastomeric/thermoplastic isolation cushion material to completely encircle the piping and avoid contact with the channel or clamp, equal to B-Line B1999 Vibra Cushion, or provide manufacturers clamp and cushion assemblies, B-Line BVT series, Power-Strut PS 004T – PS 106N Series or equal.

E. Support stationary vertical piping with carbon steel double bolt riser clamps attached to the pipe. Weld shear lugs to the pipe. In general, use one clamp for each two floors and one clamp at each floor for copper tubing. Where pipes are in open shafts, provide forged steel bar brackets fixed to wall. Riser clamps shall be copper plated when used with copper pipe. Locate riser clamp immediately under coupling or other fitting. Anvil Figure 261, MSS-SP-69, Type 8 for steel pipe; Anvil Figure CT121, MSS-SP-69, Type 8 for copper pipe.

F. Floor Support for Pipe:
   1. Sizes up to 4 inches: Cast iron adjustable pipe saddle, locknut nipple, floor flange, and concrete pier or steel support. Anvil Figure 264, MSS-SP-69, Type 38.
   2. Provide pipe stanchions for support of pipe elbows at base of riser and vertical piping. Stanchions shall be complete with base plate and vent hole. Anvil Figures 62 and 63.

G. Select hangers and supports in accordance with the manufacturer's recommended maximum loading. Hangers shall have a safety factor of 5 of 1.

H. Hangers shall not be disengaged by movement of supported pipe.

I. Provide copper-plated or felt-lined hangers for copper piping or provide 10-mil pipe wrap tape on pipe at hangers. Tape shall extend a minimum of 2 inches beyond hanger saddle on both ends

and be wrapped around pipe a minimum of 2 turns. Install vinyl-coated hangers for all plastic piping.

J. Steel hanger rods shall be threaded both ends, threaded one end, or continuous threaded, black finish. Provide rods complete with adjusting and lock nuts. Anvil Figures 146, 140 or 253.

K. Pipe Support Recommendations for Rigid Grooved Joint Systems: The maximum hanger spacing in the specification to ANSI/ASME B31.1 as noted and should be used only in conjunction with Victaulic 07 zero-flex rigid couplings. For flexible systems the hanger, support, spacing and location refer to the pipe support recommendations section in the Victaulic "Field Assembly and Installation Pocket Handbook" or equivalent provided by Grooved Joint Manufacturer.

L. Beam Clamps:
   1. Provide MSS SP-69 Type 23 malleable black iron clamp for attachment to beam flange up to 0.62 inches thick for single threaded rods of 3/8-, 1/2-, and 5/8-inch diameter, for use with pipe sizes 4-inch and less. Furnish with a hardened steel cup point set screw. Anvil Figure 86.
   2. Provide MSS SP-69 Type 28 or Type 29 forged steel jaw type clamp with a tie rod to lock clamp in place, suitable for rod sizes up to 1.5-inch diameter but limited in application to pipe sizes 8-inch and less without prior approval. Anvil Figure 228.

M. Continuous Concrete Insert Channels:
   1. Provide steel inserts with industry standard pre-galvanized finish, nominally 1-5/8-inch wide by 1-3/8-inch deep by length to suit the application, designed to be nailed to concrete forms and provide a linear slot for attaching other support devices.
   2. Installed channels shall provide a load rating of 2000 pounds per foot in concrete. Manufacturer's standard brackets, inserts, and accessories designed for use with continuous concrete inserts are acceptable.
   3. Select insert length to accommodate all pipe, duct, and conduit in the area.

N. Anchors shall be fabricated using welding steel shapes, plates, and bars to secure piping to the structure.

O. Concrete inserts shall be MSS SP-69 Type 18 wedge type or universal concrete inserts.
   1. Wedge type shall be constructed of a black carbon steel body with a removable malleable iron nut that accepts threaded rod to 7/8-inch diameter. Wedge design shall allow the insert to be held by concrete in compression to maximize the load carrying capacity. Anvil Figure 281.
   2. Universal type shall be constructed of black malleable iron body with a removable malleable iron nut that accepts threaded rod to 7/8-inch diameter. Anvil Figure 282.
   3. Use drilled steel shell with plug type inserts when the inserts are placed after the concrete is poured.

P. Drainage Piping: Provide MSS-SP-69 Type 8 or MSS-SP-69 Type 42 riser clamps for vertical piping, and MSS-SP-69 Type 52, spring hangers at the base of vertical piping.

2.3 SLEEVES

A. Construct sleeves for pipes passing through walls (other than foundation walls), floors, partitions, hung or furred ceilings, etc., of minimum 18-gauge galvanized steel, flanged on each side of wall, partition, hung or furred ceiling, etc.

B. Provide standard weight galvanized steel pipe sleeves with welded anchor flanges at foundation walls and reinforced concrete or masonry walls.

C. Provide 20-gauge galvanized sheet metal sleeves, the full depth of floor or wall, for round ductwork passing through masonry or concrete and/or steel cellular floor construction. Rectangular ductwork shall be provided with framed openings through floor and wall construction.

D. Provide cast iron or fabricated "wall pipe" equivalent to ductile-iron pressure pipe, with plain ends and integral waterstop, unless otherwise indicated.

E. Stack Sleeve Fittings: Provide manufactured, cast-iron sleeve with integral clamping flange. Include clamping ring, bolts, and nuts for membrane flashing and underdeck clamping ring with setscrews.

05/03/13 PERMIT SET

F. Provide mechanical sleeve seals at exterior wall and tank wall penetrations. Seal shall be of the modular sealing element unit type, designed for field assembly, to fill annular space between pipe and sleeve.
   1. Sealing Elements: EPDM interlocking links shaped to fit surface of pipe. Include type and number required for pipe material and size of pipe.
   2. Pressure Plates: Plastic. Include two for each sealing element.
   3. Connecting Bolts and Nuts: Carbon steel with corrosion-resistant coating of length required to secure pressure plates to sealing elements. Include one for each sealing element.

G. Install escutcheons at exposed piping through floors, ceilings, walls and partitions in finished areas, within cabinets and millwork, and piping through all fire-rated separations. Provide manufactured wall and ceiling escutcheons and floor plates, with an inside diameter to closely fit around pipe, tube, and insulation of insulated piping and an outside diameter that completely covers opening. Escutcheons shall be cast iron or cast brass, deep-pattern escutcheons if required to conceal protruding fittings, sleeve hubs or firestopping projections.

2.4 PENETRATION FIRESTOP

A. Fire-Rated Construction: Maintain barrier and structural floor fire resistance ratings including resistance to cold smoke at all penetrations, connections with other surfaces or types of construction, and sound or vibration absorption, and at other construction gaps.

B. Smoke Barrier Construction: Maintain barrier and structural floor resistance to cold smoke at all penetrations, connections with other surfaces and types of construction and at all separations required to permit building movement and sound or vibration absorption, and at other construction gaps.

C. Systems or devices listed in the UL Fire Resistance Directory under categories XHCR and XHEZ may be used, providing that it conforms to the construction type, penetrant type, annular space requirements and fire rating involved in each separate instance, and that the system be symmetrical for wall applications. Systems or devices must be asbestos-free. Mortar systems must be Warnock Hersey approved.

D. Withstand the passage of cold smoke either as an inherent property of the system, or by the use of a separate product included as a part of the UL system or device, and designed to perform this function.

E. All firestopping products must be from a single manufacturer.

F. Through-penetration smokestopping at smoke partitions: Any system complying with the requirements for through-penetration firestopping in fire-rated construction, as specified, is acceptable, provided that the system includes the specified smoke seal or will provide a smoke seal. The length of time of the fire resistance may be disregarded in a non-fire rated smoke barrier.

G. Seal all pipe and duct penetrations through fire-rated construction with factory-built devices or with manufactured fill, void, or cavity materials “Classified” by Underwriters Laboratories Inc. for use as a Through-Penetration Firestop. All firestop devices and systems shall be approved for such use by the Authority Having Jurisdiction. The firesafing system used shall maintain the fire-resistance rating of the building component that is penetrated.

H. All materials shall be non-hardening and non-toxic. The firesafing system used shall accommodate expansion and contraction of the floating mechanical piping systems without damaging the firestop or reducing its effectiveness as a smoke barrier or water seal.

2.5 GROUT

A. Grout shall be slow-hardening after application, volume-adjusting, non-staining, non-corrosive, non-gaseous, and recommended for interior and exterior applications.

B. Provide ASTM C 1107/C 1107M, Grade B, non-shrink and non-metallic, dry hydraulic-cement grout.

C. Design Mix: 5000 psi, 28-day compressive strength from a premixed and factory pre-package.

PART 3 - EXECUTION

3.1 HANGERS AND SUPPORTS

A. Deflection of pipes shall not exceed 1/240th (0.416 percent) of span. Support horizontal piping in accordance with the following schedule:

Pipe Size (inches)	Maximum Hanger Spacing (feet)			Hanger Rod Diameter (inches)		
	Steel	Cast Iron	Copper	Steel / Cast Iron	Copper	Plastic
up to 1	7	–	5	3/8	3/8	3/8
1.25	9	–	7	3/8	3/8	3/8
1.5 & 2	9	5	8	3/8	3/8	3/8
2.5	12	5	9	0.5	0.5	0.5
3	12	5	10	0.5	0.5	0.5

B. Provide hangers at each change in direction and both sides of valves 4-inch and larger. Place a hanger within 12 inches of each horizontal elbow, valve, strainer, or similar piping specialty item. Provide hanger on both sides of “no-hub” mechanical joints.

C. Support hangers from concrete inserts or beam clamps. Furnish, locate and set inserts. Construct inserts of malleable iron or pressed steel with space for rods of all sizes. Install inserts for pipes 3 inches and larger in size with a reinforcing rod 5/8-inch in diameter run through a slot in the insert specifically provided for this purpose.

D. If piping is required in a space where no inserts have been provided, drill holes in the slab (subject to Structural Engineer’s prior approval) and provide rods and hanger attached to an approved fishplate or install double expansion shields connected by a 2-inch by 2-inch angle, from which the hanger rod is to be suspended. For pipe size 2 inches and under use single shields but the hanger spacing shall be reduced to 5 feet. The carrying capacity and size of each shield shall be calculated on the basis of the spacing indicated above but the minimum size shall be 3/8-inch. Install additional shields of the same size so that the number of hangers is of adequate size to support the loads, which they carry. Shields may be used in concrete slabs only. Obtain from the expansion shield manufacturer an ICBO Evaluation Report for the product and submit to the Engineer.

E. Regardless of the type of construction (i.e., concrete, concrete-deck-steel or other variations) take particular care to support main lines and large and heavy pipes in an approved manner, including the provision of supplementary steel, if required. Supplementary steel shall be mill-rolled sections. Submit shop drawings, indicating support methods, point loadings to the building structure and hanger locations for review sufficiently in advance of concrete pouring schedules to permit evaluation, critique and any necessary changes to handling and support methods.

F. Hangers shall be directly bolted to steel beams of building construction, where they occur if approved by the Structural Engineer. Smaller pipes shall be suspended from crosspieces of pipe or steel angles, which in turn, are securely fastened to building beams or hung from building concrete construction by means of rods and inserts. The intention is to provide supports which shall be amply strong and rigid for the load, but which will not weaken or unduly stress the building construction.

G. Attachments to existing steel deck shall be limited to loads of 500 pounds. Heavier loads shall be supported by supplementary structural steel connected to structural beams. Provide all required supplementary steel.
   1. Attachments with loads up to 500 pounds shall be accomplished by drilled-in expansion shield type anchors located on the centerline of the concrete-filled ribs.
   2. 500-pound load attachments shall be spaced not less than 60 inches apart, and shall be located as close to steel beams as possible.

H. Provide approved roller support, floor stands, wall brackets, etc., for lines running near the floor or near walls, which can be properly supported or suspended by the floors or walls. Pipelines near walls may also be hung by hangers carried from approved wall brackets at a higher level than the pipe.

I. Do not hang piping or ductwork from supports for other services. Installed supports shall accommodate free expansion of the piping and duct system.

J. Wherever hangers using pipe rolls are used, provide approved steel pipe covering protection saddles, spot-welded to the piping at each hanger location.

K. Anchor piping where shown to localize expansion or to prevent undue strain on piping and branches. Anchors shall be entirely separate from hangers and of heavy forged or welded construction of approved design. All anchor designs, when submitted for approval, shall include piping reactions which respective anchors are capable of supporting.

L. Install anchors at ends of principal pipe runs and at intermediate points in pipe runs between expansion loops. Make provisions for preset of anchors as required to accommodate both expansion and contraction of piping.

M. Support copper tubing individually by approved hangers not more than 6 feet apart. Hangers for uncovered lines shall be specially designed for copper tubing and of exact outside diameter of tubing. Hangers for covered tubing shall be broad straps fitting outside of covering.

N. Hangers for insulated piping shall support the pipe without piercing the insulation. Refer to Section 23 07 00 - HVAC Insulation for insulation protection shields and pipe inserts.

O. Use hangers, which are vertically adjustable 1.5-inch minimum after piping is erected. Install hangers so that 1/2-inch minimum clearance is maintained between finished covering of pipe and adjacent work.

P. Support riser piping independently of connected horizontal piping.

Q. Adjust hangers to obtain pipe slope where specified.

R. Where piping can be conveniently grouped to allow the use of trapeze type supports, use standard structural shapes or continuous insert channels for the supporting steel. Where continuous insert channels are used, pipe supporting devices made specifically for use with the channels may be substituted for the specified supporting devices provided that similar types are used and all data is submitted for prior review.

S. Perform all welding in accordance with standards of the American Welding Society. Clean surfaces of loose scale, rust, paint or other foreign matter and properly align before welding. Use wire brush on welds after welding. Welds shall show uniform section, smoothness of weld metal and freedom from porosity and clinkers. Where necessary to achieve smooth connections, joints shall be dressed smooth.

T. Factory coat supports and anchors used in corrosive atmospheres with hot dip galvanizing after fabrication, ASTM A 123/A 123M, 1.5-ounces/square foot of surface, each side. Mechanical galvanize threaded products, ASTM B 695 Class 150, 2.0 mil coating. Field cuts and damaged finishes shall be field-covered with zinc-rich paint of comparable thickness to factory coating. Corrosive atmospheres include the following locations:
   1. Exterior locations
   2. Chemical storage or hazardous waste storage rooms
   3. Sanitary and storm sewer pumping stations
   4. Locker/shower rooms

3.2 SLEEVES

A. Provide sleeves for pipe passing through floors, walls or partitions, hung or furred ceilings, of sufficient diameter to accommodate pipe covering where such is required. Locate sleeves secure in place so that an equal space is around the pipe, after the pipe is installed.

B. For sleeves at penetrations of metal deck, nail, screw or weld to the deck prior to the pouring of the deck concrete. Set sleeves in such a manner so that no concrete fills their interior during the concrete pouring and finishing operations.

C. For exposed pipes, caulk floor sleeves with firestop material watertight and project sleeve approximately 2 inches above the finished floor. Finish sleeves with specified flanges flush with the bottom of slab and also with the finished faces of wall.

D. Provide sleeves with an inside diameter at least 1/2-inch greater than outside of pipe served, including pipe insulation which must be continuous through sleeve.

E. Where piping penetrates walls (other than foundation walls), partitions, floor slabs, etc., pack space between piping and sleeve with mineral wool (for depth of sleeve), or firestop material.

F. Do not support pipes by resting clamps on sleeves. Clamps shall extend beyond sleeve and be supported outboard of sleeve in an approved manner. In no case shall sleeves be cut or slotted to accommodate pipe clamps.

G. Provide escutcheon plates of the proper size for piping in sleeves passing through floors, walls, soffits, furrings, partitions, hung ceilings, etc., throughout the building where exposed. Exposed escutcheons shall be cast brass chromium plated, bell type, with setscrews of sufficient diameter to include any required pipe insulation. Attach escutcheon to building material, not to pipe. Do not penetrate vapor barriers.
   1. Split-casting, deep-pattern type cast-brass type with concealed hinge and set screw with polished chrome-plated and rough brass finish.
   2. Split-casting, floor-plate type cast brass with concealed hinge and set screw.

H. Exterior-wall pipe penetrations: Seal penetrations using sleeves and mechanical sleeve seals. Select sleeve size to allow for 1-inch annular clear space between pipe and sleeve for installing mechanical sleeve seals.
   1. Install aboveground steel pipe for sleeves smaller than 6 inches.
   2. Install aboveground cast-iron "wall pipes" for sleeves 6 inches and larger.
   3. Install underground cast-iron "wall pipes" for all sleeves.
   4. Mechanical Sleeve Seal Installation:
      a. Select type and number of sealing elements required for pipe material and size.
      b. Position pipe in center of sleeve.
      c. Assemble mechanical sleeve seals and install in annular space between pipe and sleeve.
      d. Tighten bolts against pressure plates that cause sealing elements to expand and make watertight seal.
      e. For wall thickness up to 12 inches provide one mechanical sleeve seal at the interior side of sleeve, for wall thickness greater than 12 inches provide two mechanical sleeve seals, one at the interior side of sleeve and one at the exterior side of sleeve.

3.3 FIRESTOPPING

A. Where space for future ducts, pipes and conduits is required, provide sleeves and fill with lightweight concrete or firestop.

B. Provide firestopping and grouting around pipes and ducts penetrating concrete slabs, concrete walls and masonry walls with cement grout in the sleeved opening extending full depth through wall or floor slab. Provide sheet metal cover over the insulation before applying grout. Around pipes and ducts through fire rated gypsum board construction, pack the annular space between the wall sleeve and the insulation sheet metal cover with noncombustible approved firestop material and finish with 20-gauge sheet metal collar on ducts and escutcheons on pipe where duct or pipework is exposed. Attach escutcheons to wall.

C. Verify existing conditions and substrates before starting work. Correct unsatisfactory conditions before proceeding. Proceed with installation only after penetrations of the substrate and supporting brackets have been installed.

D. Environmental Requirements:
   1. Provide adequate ventilation if using solvent.
   2. Provide forced-air ventilation during installation if required by manufacturer.
   3. Keep flammable materials away from sparks or flame.
   4. Provide masking and drop cloths to prevent contamination of adjacent surfaces by firestopping materials.

5. Comply with manufacturing recommendations for temperature and humidity conditions before, during and after installation of firestopping.

E. Clean surfaces that will be in contact with penetration seal materials of dirt, grease, oil, loose materials, rust, or other substances that may affect proper fitting, adhesion, or the required fire resistance.

F. Install penetration seal materials in accordance with the UL Fire Resistance Directory or Mortars per Warnock Hersey approval and in accordance with manufacturer's instruction.

G. Seal holes or voids made by penetrations to ensure an effective smoke barrier.

H. Where large openings are created in walls or floors to permit installation of pipes, ducts or other items, close unused portions of opening with firestopping material tested for the application. See UL Fire Resistance Directory or Warnock Hersey approvals.

I. Install smokestopping as specified for firestopping.

3.4 GROUTING

A. Mix, install and cure grout for mechanical equipment base bearing surfaces, pump and other equipment base plates, and anchors.

B. Clean surfaces that will come into contact with grout. Provide forms as required for placement of grout. Avoid air entrapment during placement of grout.

C. Place grout, completely filling equipment bases.

D. Place grout on concrete bases and provide smooth bearing surface for equipment.

E. Place grout around anchors.

END OF SECTION

05/03/13 PERMIT SET

SECTION 230548

VIBRATION AND SEISMIC CONTROLS FOR HVAC

PART 1 - GENERAL

1.1 WORK INCLUDED

A. The work of this Section shall include, but is not limited to, the following:
   1. Vibration isolation elements for Division 23 mechanical piping, ductwork and rotating equipment
   2. Equipment isolation bases
   3. Flexible connectors
   4. Seismic restraint and anchorage calculations
   5. Seismic restraints for isolated and non-isolated equipment, piping and ductwork
   6. Supervision and inspection of installed vibration isolators, seismic restraints, anchorage and associated hardware

1.2 RELATED DOCUMENTS

A. Section 23 05 01 – HVAC General Provisions

B. Section 23 05 29 – Hangers and Supports for HVAC

C. Section 23 23 00 – Refrigerant Piping

D. Section 23 31 00 – HVAC Ducts and Casings

E. Division 26 – Electrical Specifications

1.3 REFERENCE STANDARDS

Published specifications standards, tests or recommended methods of trade, industry or governmental organizations apply to work in this Section where cited below:

A. ASCE – American Society of Civil Engineers
   1. ASCE 7-05, 2006 Revised 2007 – Minimum Design Loads for Buildings and Other Structures

B. Federal Specifications
   1. MIL-DTL-83420 (2005) – Wire Rope, Flexible, for Aircraft Control

C. IBC – International Building Code (2006)

D. CBC – California Building Code: Title 24 Building Standards

E. California Fire Code

1.4 QUALITY ASSURANCE

A. Provide control of excessive noise and vibration in the buildings due to the operation of machinery or equipment, and/or due to interconnected piping, ductwork or conduit. Install vibration isolation units and associated hangers and bases under the direct supervision of the vibration isolation manufacturer's engineer.
   1. Vibration isolators shall have either known undeflected heights or calibration markings so that after adjustment, when carrying their load, the deflection under load can be verified, thus determining that the load is within the proper range of the device and that the correct degree of vibration isolation is being provided according to the design.
   2. Isolators shall operate in the linear portion of their load versus deflection curve. Furnish load versus deflection curves that are linear over a deflection range of not less than 50 percent greater than the design deflection.
   3. The ratio of lateral to vertical stiffness shall be neither less than 0.9 nor greater than 1.5.
   4. The theoretical vertical natural frequency for each support point, based upon load per isolator and isolator stiffness shall not differ from the design objectives for the equipment as a whole by more than plus or minus 10 percent.

05/03/13 PERMIT SET

5. All neoprene mountings and components shall be oil resistant and have:
   a. Shore durometer hardness of 40 to 65, after minimum aging of 20 days or corresponding oven-aging
   b. Minimum tensile strength of 2000 pounds per square inch
   c. Minimum elongation of 300 percent
   d. Maximum compression set at 25 percent

B. Mounting systems or components shall not be resonant with any of the supported equipment forcing frequencies.

C. Isolators shall be selected on the basis of the static and dynamic loads actually supported. Dynamic loads include those due to: wind, fluid flow, thrust and rotational inertia. Select each isolator independently for proper load distribution on each piece of equipment, duct and pipe support, or base.

D. Vibration isolation hardware shall not be concealed until reviewed by the Engineer.

E. Verify specified clearances, plumb installation of hanger rods and lack of interference – no contact permitted with gypsum board, framing, ceiling wires, light fixtures, conduit, ducts and piping.

F. Verify that the space below inertia bases is clean and clear of construction debris and obstructions.

G. Verify proper vibration isolator loading and deflection.

H. Vibration isolation field inspection engineer shall provide a punchlist report for the Engineer's review.

I. Vibration isolation and seismic restraint field inspection engineer shall submit a close-out letter stating that the installation is complete and meets the requirements of the specification and the manufacturer's installation instructions, and all deficiencies noted have been corrected.

J. Cooperate with Owner's Special Inspector.

1.5 SUBMITTALS

A. Manufacturer's Data:
   1. Catalog cuts and data sheets on specific vibration isolators to be utilized showing compliance with the specifications.
   2. An itemized list showing the items of equipment and piping to be isolated, the isolator type and model number selected, isolator loading and deflection, and reference to specific drawings.
   3. Written approval of the base design shall be obtained from the equipment manufacturer.

B. Shop Drawings: Concrete reinforcing details and templates for all foundations, bases, supports, inertia blocks, hanger bolts, etc.; support frame details, pipe support details; vibration isolation mountings for equipment and piping including equipment weight, center of gravity and operating speed, location and installation details. Include in the vibration isolation equipment submittal drawing the following information based on equipment submittals released for construction:
   1. Isolation mounting deflections.
   2. Spring diameters, compressed spring heights at rated load and solid spring heights where steel spring isolation mountings are used.
   3. Equipment operating speed.
   4. Seismic restraint calculations stamped by a California State licensed structural or civil engineer, confirming compliance with ASCE 7-05.
   5. Product data and calculations to demonstrate compliance with the requirements of regulatory agencies.
   6. Note compliance with seismic code regulations and the project specification on the submittals.
   7. Number and location of seismic restraints and anchors for each piece of equipment including but not limited to bolted or welded connections between cooling tower and support beams, vertical pipe risers, bolt sizing and embedment depth, and seismic cable strength and diameters.
   8. Drawings showing methods of isolation of pipes and ductwork piercing walls and floor slabs.

9. Provide installation instructions, drawings and field supervision to assure proper installation and performance.
10. Certificate of compliance for each component mounting system and anchorage as required by CBC Section 1708.5.
11. Written statement of responsibility as required by CBC Section 1706.

C. Submit close-out letter and report as described in Clauses 1.04, I. and 3.05, A.

D. Submit seismic restraint calculations as described in Clause 2.04, A.

1.6 MANUFACTURER RESPONSIBILITIES

A. Manufacturer of vibration isolation equipment shall have the following responsibilities:
1. Certificate of compliance.
2. Determine vibration isolation and seismic restraint sizes and required locations.
3. Provide piping, ductwork and equipment isolation systems and seismic restraints as scheduled or specified.
4. Guarantee specified isolation system deflection.
5. Provide installation instructions, drawings and field supervision to assure proper installation and performance.
6. Seismic restraints and anchorage shall be designed for the lateral and vertical forces required by the Building Code for the specific project type and site. Confirm lateral and vertical forces and site-specific design criteria with the project Structural Engineer.
7. Written statement of responsibility for the seismic restraint system as required by CBC Section 1706.

1.7 DEFINITIONS

A. Life Safety Systems:
1. All components involved with fire protection including service water supply piping, water tanks, etc. Life safety system restraints shall be designed with an Importance Factor of 1.5.

B. Positive Attachment:
1. A positive attachment is defined as a cast-in anchor, a drill-in wedge anchor, a double-sided beam clamp loaded perpendicular to a beam, or a welded or bolted connection to structure. Single sided “C” type beam clamps for support rods of overhead piping, ductwork, components involved with fire protection or any other equipment are not acceptable as seismic anchor points.

1.8 SPECIAL INSPECTIONS

A. The Owner shall retain a Special Inspector to perform periodic inspections of the following systems:
1. Vibration isolation systems where the clearance between equipment support frame and seismic restraints is 1/4 inch or less.
2. Piping and attached equipment containing flammable, combustible or highly toxic materials. Importance Factor 1.5.
3. Ductwork and attached equipment containing hazardous substances. Importance Factor 1.5.

PART 2 - PRODUCTS

2.1 ACCEPTABLE MANUFACTURERS

A. Vibration Isolation: Mason Industries (MII), Vibration Mountings & Control (VMC), Amber-Booth (AB), Vibration Eliminator (VEC), Vibrex Vibration Control Systems (VVC)

B. Piping and Duct Seismic Bracing: Kin-Line, Super Strut, Mason Industries

2.2 MATERIALS

A. All vibration isolation devices shall be the products of a single manufacturer.

B. Where exposed to the atmosphere, all steel shall be hot-dipped galvanized; hardware shall be cadmium plated; springs shall be powder coated.

2.3 VIBRATION ISOLATORS

A. Refer to these specifications and drawings for vibration isolator types to be used:

1. Type “C1” pre-compressed spring hanger rod isolators shall incorporate the following:
   a. Spring element seated on a steel washer in series with a deflected neoprene element as specified.
   b. Steel retainer box encasing the spring and neoprene washer. Ensure no metal-to-metal contact.
   c. Minimum 1/2-inch clearance between retainer box and spring hanger rod. Provide neoprene grommet.
   d. Where operating weight differs from installed weight provide built-in adjustable limit stops to prevent equipment rising when weight is removed. Stops shall not be in contact during normal operation. Clearly indicate deflection with scale on isolator.
   e. Maximum 30-degree allowable rod misalignment from centerline axis.
      Type PC30N ..... MII
      Type SNCR ..... VEC
      Type RSH-30A ..... VMC
2. Type “E” elastomer hanger rod isolators shall incorporate the following:
   a. Molded unit type neoprene element as specified.
   b. Steel retainer box encasing neoprene mounting.
   c. Clearance between mounting hanger rod and steel retainer box. Provide neoprene grommet.
      Type HD ..... MII
      Type CD ..... VEC
      Type HSS ..... VMC
3. Type “G” pad type elastomer mountings shall incorporate the following:
   a. Neoprene impregnated canvas duck material.
   b. Maximum loading 1000 pounds per square inch. Provide suitable bearing plate to distribute load.
   c. Minimum thickness, 2-inch.
      Type HL ..... MII
      Type Fabriflex ..... VMC

2.4 SEISMIC RESTRAINTS

A. General:

1. Provide restraints capable of safely accepting forces specified in PART 1 of this Section, without failure, to maintain equipment, piping, and ductwork in a captive position. Restraints must not short circuit vibration isolation systems or transmit objectionable vibration or noise. Submit calculations by a structural or civil engineer licensed and registered in the State of California to verify seismic restraint and cable capacities.
   a. Seismic Restraint, Type II: Cable type with approved end fastening devices (minimum of two per end) to equipment and structure. Cable to comply with Federal Specification MIL-DTL-83420 military grade 7 by 19 galvanized steel.
      Type SCBH ..... MII

PART 3 - EXECUTION

3.1 GENERAL

A. Install in accordance with manufacturer’s recommendations and written instructions. Vibration isolators must not cause any change of position of equipment or piping resulting in piping stresses or misalignment.

B. Isolate mechanical equipment from the building structure by means of vibration isolators as specified.

C. Vibration isolated piping and ductwork shall pass freely through walls and floors without rigid connections. Maintain 3/4-inch to 1.25-inch concentric clearance around outside surfaces of piping or ductwork at penetration points. Pack this clearance space tightly with fiberglass, and

05/03/13 PERMIT SET

caulk airtight after installation of piping or ductwork, or provide resilient firestopping as required. Provide supports 6 to 8 inches from walls or partitions on both sides of penetrations.

D. Do not make rigid connections between equipment and building structure that degrades or short circuits the vibration isolation system specified herein.

E. Loop electrical circuit connections to isolated equipment to allow free motion. Include at least one slack 90-degree bend.

F. Bring to the Engineer's attention prior to installation any conflicts with other trades, which will result in unavoidable rigid contact with equipment or piping as, described herein, due to inadequate space or other unforeseen conditions. Corrective work necessitated by conflicts after installation will be at the Contractor's expense.

G. Level vibration isolated equipment under rated design operating conditions while maintaining the isolation criteria. Isolators shall be plumb and aligned during operation.

3.2 EQUIPMENT ISOLATORS

A. Mount vibration isolating devices and related inertia blocks on concrete housekeeping pads.

B. Support each fan and motor assembly on a single structural steel frame. Provide flexible duct connections at inlet and discharge of fan coils and fans, unless prohibited by codes or local Authorities Having Jurisdiction. Refer to Section 23 31 00, HVAC Ducts and Casings.

C. If the equipment to be mounted is not furnished with integral structural frames and external mounting lugs (both of suitable strength and rigidity), install approved structural sub-base in the field which will support the equipment to be hung and to which will be attached the hangers.

D. Additional Requirements:
   1. Provide brackets to accommodate the isolator. Manufacturer shall indicate bolt hole sizes and locations, welds required, and specify the vertical position and size of the bracket.
   2. Adjust the isolators after the entire installation is complete and under full operational load so that the load is transferred to the isolator.
   3. Verify that all insulated isolator and mounting systems permit equipment motion in all directions. Adjust or provide additional resilient restraints to flexibly limit equipment start-up lateral motion to 1/2-inch.
   4. Prior to start-up, verify that there are no isolation short circuits in the base or isolators.

3.3 PIPING ISOLATORS

A. Isolate piping as follows:
   1. Piping in mechanical rooms, fan rooms, plumbing equipment rooms or boiler rooms.
   2. Piping within 50 feet (or 100 diameters if greater) from connected rotating equipment and pressure-reducing stations.
   3. As additionally specified in the following clauses.

B. Install isolators with the isolator hanger box attached to, or hung as close as possible to, the structure. Provide outrigger supports where required for clearance to equipment and to maintain minimum clearance of equipment to structure above.

C. Suspend isolators from substantial structural members, not from slab unless specifically permitted. Attachments to fireproofed structural members shall be re-fireproofed as required.

D. Align hanger rods to clear the hanger box. Replace bent rods.

E. Support pipe for the first three pipe hangers from any rotating equipment with isolator Type "C1" with a minimum 1.5-inch static deflection.

F. Support horizontal pipe 2 inches and smaller by means of Type "E" isolator with a minimum of 0.25-inch deflation.

G. Domestic water and HVAC piping, one-inch diameter and less, shall be isolated using Acousto-Plumb or equal resilient attachments or shall be provided with thermal insulation with shields at support points.

H. Mount all isolators between building structure and supplementary steel.

I. Suspend isolators from rigid and massive support points.

J. Supplementary steel to be sized for a maximum deflection of 0.08 inches at center of span.

K. Vibration isolation components shall not be used to correct misaligned sections of pipe.

L. Vertical piping subject to thermal expansion shall have pipe riser guides, anchors and supports located so that there will be no direct metal contact of the piping with the building structure.
   1. Weld steel guide bars to the pipe at a maximum spacing of 60 feet. The outside diameter of the opposing guide bars shall be smaller than the inside diameter of the pipe riser clamp in accordance with standard field construction practice. Each end of the pipe riser clamp shall be rigidly attached to an all-directional pipe anchor isolation mounting, which in turn shall be rigidly fastened to the supplementary steel framing within the shaft.
   2. The all-directional pipe anchor shall consist of a telescoping arrangement of 2 sizes of steel tubing separated by a minimum of 1/2-inch thick heavy duty neoprene and canvas duck isolation pad. Provide vertical restraints by similar material arranged to prevent vertical travel in either direction. The allowable load on the isolation material shall not exceed 500 pounds per square inch. Anchors shall be Mason Industries Type ADA or equal.
   3. Construct piping guides for insulated piping with a 10-gauge metal sleeve around the piping. Provide the thermal insulation requirements for the piping between the piping and the sleeve. The metal sleeve outside diameter shall be smaller than the pipe riser clamp inside diameter. The pipe riser clamp shall be rigidly attached to the pipe guide, which shall be rigidly attached to the steel framing within the shaft. Guides shall be Mason Industries Type VSG or equal.
   4. The pipe anchor mountings shall be capable of safely supporting loads, expansion, and thrusts developed by the installed piping.

M. Provide flexible piping connections for connections to rotating equipment as specified and where shown on the Drawings.

N. Provide flexible piping connections and four-elbow offsets for all piping that crosses building seismic or expansion joints unless more stringent flexible all-directional joints have been specified elsewhere.

3.4 SEISMIC RESTRAINTS

A. General:
   1. Cable restraints shall be installed slightly slack to avoid short circuiting the isolated suspended equipment, piping or ductwork. Cable restraints shall be installed taut on non-isolated systems. Seismic solid brace restraints may be used in lieu of cables on non-isolated rigidly attached systems only.
   2. Where cable or solid brace restraints are located, the equipment, ductwork or piping support rods shall be angle braced for compression loads.
   3. At all locations where cable or solid brace restraints are attached to pipe clevises, the clevis cross bolt shall be reinforced with cross braces or a pipe spacer placed over the clevis bolt.
   4. Provide drill-in concrete anchors for ceiling and wall installation and female wedge type for floor-mounted equipment.

B. Seismic Restraint of Piping:
   1. Transverse piping restraints shall be at 40-foot maximum spacing for all pipe sizes, except where lesser spacing is required to limit anchorage loads.
   2. Longitudinal restraints shall be at 80-foot maximum spacing for all pipe sizes, except where lesser spacing is required to limit anchorage loads.
   3. Where thermal expansion is a consideration, guides and anchors may be used as transverse and longitudinal restraints provided they have a capacity equal to or greater than the restraint loads in addition to the loads induced by expansion or contraction.
   4. Cast iron and PVC piping transverse restraints must be at 20-foot maximum and longitudinal restraints at 40-foot maximum spacing.
   5. Transverse restraint for one pipe section may also act as a longitudinal restraint for a pipe section of the same size connected perpendicular to it if the restraint is installed within a specified distance (based on engineered data) of the elbow or tee or combined stresses are within allowable limits at longer distances.

6. Hold-down clamps must be used to attach pipe to all trapeze members before applying restraints in a manner similar to clevis supports.
7. Branch lines may not be used to restrain main lines.

C. Seismic Restraint of Ductwork:
1. Transverse restraints shall occur at 30-foot intervals or at both ends of the duct run if less than the specified interval. Transverse restraints shall be installed at each duct turn and at each end of a duct run.
2. Longitudinal restraints shall occur at 60-foot intervals with at least one restraint per duct run. Transverse restraints for one duct section may also act as a longitudinal restraint for a duct section connected perpendicular to it if the restraints are installed within 4 feet of the intersection of the ducts and if the restraints are sized for the larger duct. Duct joints shall conform to SMACNA duct construction standards.
3. The ductwork must be reinforced at the restraint locations. Reinforcement shall consist of an additional angle on top of the ductwork that is attached to the support hanger rods. Ductwork is to be attached to both upper angle and lower trapeze.
4. A group of ducts may be combined in a larger frame so that the combined weights and dimensions of the ducts are less than or equal to the maximum weight and dimensions of the duct for which bracing details are selected.
5. Walls, including gypsum board non-bearing partitions, which have ducts running through them, may replace a typical transverse brace. Provide channel framing around ducts and solid blocking between the duct and frame.

D. Seismic Restraint of Equipment:
1. All mechanical equipment shall be vibration isolated and seismically restrained as scheduled using either inherently restrained vibration isolators or separate all-directional seismic snubbers as specified. Suspended equipment shall be restrained by cable restraints.

E. Seismic Restraint Exclusions (Flexible connectors are required between pipe or duct and equipment):
1. Piping:
   a. For Ip = 1.5 projects or systems, all piping 1-inch nominal diameter and smaller, except cast iron and PVC piping, regardless of size.
   b. For Ip = 1.0 projects, all steel and copper piping 3-inch diameter and smaller, except cast iron and PVC piping, regardless of size.
   c. All piping suspended by individual hangers 12 inches or less as measured from the top of the pipe to the bottom of the support where the hanger is attached provided the hanger rod connection to the structure will not develop a moment. However, if the 12-inch limit is exceeded by any hanger in the run, seismic bracing is required for the run.
   d. The 12-inch exemption applies for trapeze supported systems if the top of each item supported by the trapeze qualifies.
2. Ductwork (for Importance Factor 1.0):
   a. Rectangular and square ducts that are less than 6 square feet in cross-sectional area.
   b. Oval ducts that are less than 6 square feet in cross-sectional area based on nominal size.
   c. Round duct less than 34 inches in diameter.
   d. All duct suspended by hangers 12 inches or less in length as measured from the top of the duct to the point of attachment to the structure. Hangers must be attached within 2 inches of the top of the duct with a minimum of two #10 sheet metal screws. If the 12-inch limit is exceeded by any hanger in the run, seismic bracing is required for the run.

3.5 INSPECTION

A. On completion of installation of all vibration isolation devices specified herein, the local representative of the isolation manufacturer, the manufacturer's engineer shall inspect the completed system and submit a report to the Engineer indicating the adequacy of the installation and listing any corrective action required.

B. Replace any component found to be visibly deflected with more substantial components.

05/03/13 PERMIT SET

C. Unless otherwise scheduled on the Drawings provide the following Equipment Vibration Isolation and Seismic Restraints:

Equipment	Deflection (Inches)	Isolator Type	Restraint Type
Suspended fans	1.0	"C1"	II
Fan coil units	0.35	"E"	II
Wall-mounted fans and exhaust fans less than 1/4 hp	0.15	"G"	–

D. Review Special Inspections reports prepared by the Owner's Agent and make corrections to deficiencies as noted. Provide written response to deficiency and document corrective actions.

END OF SECTION

05/03/13 PERMIT SET

SECTION 230550

ACCESS DOORS IN GENERAL CONSTRUCTION FOR HVAC

PART 1 - GENERAL

1.1 WORK INCLUDED

A. The work of this Section shall include, but is not limited to, the following:
   1. Furnishing access doors for installation in general construction and color-coded identification dots.

1.2 RELATED DOCUMENTS

A. Section 23 05 01 – HVAC General Provisions

B. Section 23 05 53 – Identification for HVAC

1.3 REFERENCE STANDARDS

A. ASME – American Society of Mechanical Engineers
   1. ASME A13.1 – 2007: Scheme for the Identification of Piping Systems

B. ASTM – American Society for Testing and Materials
   1. ASTM A 167: Standard Specification for Stainless and Heat-Resisting Chromium-Nickel Steel Plate, Sheet and Strip
   2. ASTM A 1008: Standard Specification for Steel, Sheet, Cold-Rolled, Carbon, Structural, High-Strength Low-Alloy

C. NAAMM – National Association of Architectural Metal Manufacturers
   1. AMP 500-06 – Metal Finishes Manual for Architectural and Metal Products

D. UL – Underwriters Laboratories Inc.
   1. UL Fire Resistance – 2009: Fire Resistance Directory set

1.4 QUALITY ASSURANCE

A. Single-Source Responsibility: Obtain doors for the entire project from a single manufacturer.

B. Fire-Resistive Rating: Wherever access doors are required in construction where a fire-resistive classification is indicated, on the Architectural documents, provide access door assembly with panel door, frame, hinge and latch from manufacturer listed in Underwriters Laboratories Inc.'s "Building Materials Directory" for required rating.
   1. Provide UL Label on each fire-rated access door.

C. Furnish inserts and anchoring devices that must be built into other work for installation of access doors.

1.5 SUBMITTALS

A. Shop Drawings: Submit access door locations superimposed on piping layout and duct layout shop drawings. Submit manufacturer's data on access doors including size and type.

PART 2 - PRODUCTS

2.1 ACCEPTABLE MANUFACTURERS

A. Access Doors: Milcor Inc., Karp Associates, Inc., J.L. Industries, Acudor, Williams Brothers

B. Color-Coded Identification Buttons: Brady/Seton, Stranco, Kolby

2.2 ACCESS DOOR CONSTRUCTION

A. Provide recessed type as required to accept matching ceiling tile or drywall, etc.

B. Provide UL-rated doors for fire-rated construction.

C. Provide flush type steel framed panel with concealed continuous piano hinges for masonry or concrete construction. Provide textured frame for drywall construction.

05/03/13 PERMIT SET

D. Provide cam type locking device. Provide cylinder lock type access doors located in public corridors and washrooms complete with master keys.

E. Provide insulated doors in insulated or acoustically rated construction.

F. Furnish access doors of proper size for access to concealed equipment. Unless otherwise indicated, minimum size to be 12-inch by 12-inch for hand access and minimum 18-inch by 18-inch for valve and actuator access and 24-inch by 24-inch for equipment access. The following schedule is based on Karp Associates Inc.:
   1. Rated Construction: Fire-rated access door UL “B” Label Model KRP
   2. Non-Rated Dry Wall Construction: Model KDW
   3. Non-Rated Masonry, Concrete: Model DSC 214-M
   4. Non-Rated Ceramic Tile, Stainless Steel, Satin Finish: Model DSC 214-M
   5. Non-Rated Plaster Wall: Model DSC 214-PL
   6. Non-Rated Plaster Ceilings: Model DSC 210-PL

G. Provide color-coded dots on access doors and accessible ceiling tiles to indicate type of service.

PART 3 - EXECUTION

3.1 GENERAL

A. Coordinate location of access doors in hung ceilings, furred spaces, walls, etc., to provide access to concealed work items requiring maintenance and/or adjustment. Obtain approval of the Engineer for the locations of such access doors.

B. Locate and group equipment requiring access doors. Coordinate location of equipment with other trades to minimize number of access doors in one area.

C. Provide access doors for maintenance or adjustment purposes for mechanical system components, including but not limited to the following:
   1. Valves
   2. Dampers
   3. Concealed equipment
   4. Controls, sensors, devices

D. Access doors shall be marked by small color markings at corner of tile or door in accordance with the following color assignments:

HVAC	Blue
Fire Protection	Red
Plumbing	Silver

END OF SECTION

05/03/13 PERMIT SET

SECTION 230553

SYSTEMS IDENTIFICATION FOR HVAC

PART 1 - GENERAL

1.1 WORK INCLUDED

A. The work of this Section shall include, but is not limited to, the following:
   1. Valves, automatic control valves, dampers (including smoke and combination fire/smoke dampers) and automatic control dampers identification
   2. Equipment identification
   3. Piping and ductwork identification
   4. Signage

1.2 RELATED DOCUMENTS

A. Section 23 05 01 – HVAC General Provisions

B. Section 23 05 50 – Access Doors in General Construction for HVAC

C. Section 23 09 23 – Direct Digital Control System for HVAC

1.3 REFERENCE STANDARDS

A. ASME – American Society of Mechanical Engineers
   1. ASME A13.1 – 2007: Scheme for the Identification of Piping Systems

B. ASTM – American Society for Testing and Materials
   1. ASTM D 709 – 2007: Standard Specification for Laminated Thermosetting Materials

1.4 QUALITY ASSURANCE

A. Piping identification shall comply with ASME Standard A13.1.

1.5 SUBMITTALS

A. Submit the following:
   1. Damper identification chart (including smoke and combination fire/smoke dampers)
   2. Lists of pipe and equipment to be labeled
   3. Color chart

B. Product Data: Manufacturer's latest published data for materials, equipment and installation, including samples of valve and damper tags, equipment identification and piping identification.

C. Maintenance Manuals: Provide valve and damper tag schedules for inclusion in maintenance manuals.

PART 2 - PRODUCTS

2.1 ACCEPTABLE MANUFACTURERS

A. Brady/Seton

B. Stranco

C. Kolbi

2.2 VALVE AND DAMPER IDENTIFICATION

A. All tagged components shall be in accordance with ASME A13.1.

B. For valves, smoke and combination fire/smoke dampers and automatic control dampers, use metal tags 2-inch minimum diameter, fabricated of 19-gauge polished brass, stainless steel or aluminum.
   1. Attach tags with jack chain "S"-hook or split ring of same materials.
   2. Provide engraved/stamped tags with black ink-filled 1/4-inch high letters and 1/2-inch high numbers.
   3. Provide 5/32-inch hole for fastener.

05/03/13 PERMIT SET

2.3 PIPE IDENTIFICATION

A. Pipe markers shall have 1.25-inch high letters and integral directional flow arrows. Smaller letters may be used only when space does not permit 1.25-inch high lettering.

B. For piping up to 5-inch diameter, use pre-formed snap-on markers.

C. Material: Semi-rigid colored vinyl; 15 gauge up to 1-inch pipe, 30 gauge for all other pipe sizes.

D. Seton “Setmark” or equal.

E. Pressure-sensitive tapes are unacceptable.

2.4 EQUIPMENT IDENTIFICATION

A. Mechanical equipment shall be identified by means of nameplates permanently screw-fastened to the equipment. Nameplates shall be black surface, white core laminated bakelite with engraved letters. Plates shall be a minimum of 3-inch long by 1-inch wide with white letters 3/8-inch high.

B. Identification of Automatic Controls: Refer to Section 23 09 23 – Direct Digital Control System for HVAC for identification requirements.

C. Terminal equipment installed in ceiling spaces such as variable volume terminals, fan coil units, heat pumps, etc., shall have identifying number stenciled on bottom of unit so that it is visible from below.

2.5 SIGNAGE

A. Provide engraving stock melamine plastic laminate, complying with ASTM D-709, in sizes and thicknesses indicated, engraved with engraver's standard letter style of sizes and wording indicated, black with white core (letter color) except as otherwise indicated, punched for mechanical fastening except where adhesive mounting is necessary because of substrate.

1. Thickness: 1/16-inch for signs up to 20 square inches or 8-inch length; 1/8-inch for larger signs.
2. Fasteners: Self-tapping stainless steel screws, except contact type permanent adhesive where screws cannot or should not penetrate substrate.

PART 3 - EXECUTION

3.1 EQUIPMENT IDENTIFICATION

A. Identify equipment with identical letter and/or number as used on the Drawings. Where space is available, use full name of equipment. Attach nameplates in a permanent manner in a location that will be clearly visible after installation is complete.

B. Controls identification shall be specified in Section 23 09 23 – Direct Digital Control System for HVAC. Also identify controls not included in Section 23 09 23 such as float switches, alarms, remote push-button switches with 1/4-inch high lettering and laminated plastic plates screwed or chained to equipment.

3.2 PIPING IDENTIFICATION

A. Piping identification shall be in conformance with the ASME A13.1.

B. Identify piping systems with color-coded bands, sharply contrasting with background. Locate bands near strategic points, such as valves, items of equipment, changes in direction, wall penetrations, capped stub-out for future connection and every 40 feet of straight runs. If necessary, paint a strip background of black or white to obtain contrast.

C. Apply bands where they can be easily read. Provide bands with backgrounds of different colors.

D. Drain piping serving mechanical equipment items for which the drain discharge is not visible from the equipment shall be marked near the point of discharge indicating the item of equipment served.

3.3 ACCESS IDENTIFICATION

A. Identify service, damper, duct access door, piping and equipment behind all architectural access doors.

B. Removable ceiling tile shall be marked by small color markings at corner of tile or door in accordance with the following color assignments:

HVAC Cooling	–	Green
HVAC Heating	–	Yellow
HVAC Heating/Cooling	–	Yellow/Green
HVAC (other)	–	Blue

3.4 INSTALLATION OF IDENTIFICATION

A. Where identification is to be applied to surfaces which require insulation, painting or other covering or finish, including valve tags in finished mechanical spaces, install identification after completion of covering and painting. Install identification prior to installation of acoustical ceilings and similar removable concealment.

END OF SECTION

05/03/13 PERMIT SET

SECTION 230593

TESTING, ADJUSTING AND BALANCING FOR HVAC

PART 1 - GENERAL

1.1 WORK INCLUDED

A. The work of this Section shall include, but is not limited to, the following:
   1. Adjust and balance hydronic systems.
   2. Adjust and balance air systems.
   3. Perform acoustic measurements to systems.
   4. Perform airflow measurements for smoke control system zones and stair and vestibule pressurization tests.

1.2 RELATED DOCUMENTS

A. Section 22 11 00 - Domestic Water Systems

B. Section 23 05 01 - HVAC General Provisions

C. Section 23 33 13 - Dampers

D. Section 23 34 00 - HVAC Fans

E. Section 23 37 00 - Air Outlets and Inlets

F. Section 23 81 19 - Variable Refrigerant Volume (VRV) System

1.3 REFERENCE STANDARDS

A. All work shall be in accordance with the Associated Air Balance Council Standards.

1.4 QUALITY ASSURANCE

A. Each Balancing Contractor providing a bid for this work shall submit the following information with the bid, or the bid shall not be accepted by the Owner:
   1. List previous projects of similar scope with dates that projects were executed.
   2. Outline organization of Contractor, including names of principals, years of operation, address, and phone number.
   3. List instruments owned by Contractor and procedures that will be used on this project.
   4. List name of job site supervisor that will execute this work and a résumé of individual's specific work experience.
   5. Provide a sample of a balance report on a project of similar scope.

B. The final balancing, testing, and adjustments of the complete mechanical systems shall be the direct responsibility of the Balancing Contractor, including all costs for doing this work and provision of the personnel, materials, tools, and instrumentation to accomplish this work. Meet standards contained in the AABC National Standard Chapter 17 through 26 and other criteria as set forth in these specifications.

C. The Contractor must primarily be engaged in the balancing and testing of heating, ventilating and air conditioning systems. The Contractor must be AABC certified.

1.5 SUBMITTALS

A. Three months prior to the start of the Test and Balance field activities, submit certification of most recent calibration of all instruments to be used on this project.

B. Submit project-specific agenda (outline) as described in Clause 1.06, B.

C. Submit sample forms as described in Clause 1.06, E.

D. Submit Balancing Report as described in Paragraph 3.04.

05/03/13 PERMIT SET

1.6 PROCEDURES

A. General: Prior to commencement of balancing, review proposed schedule, methods and instruments to be used in balancing with the Engineer. Include descriptive data, procedure data and sample forms.

B. Descriptive Data: Review Contract Documents, shop drawings released for construction, design concepts and general function of each system including associated equipment and operation cycles. Confirm listing of flow and terminal measurements to be performed; selection points for proposed sound measurements.

C. Procedure Data: Outline procedures for taking test measurements to establish compliance with requirements. Specify type of instruments to be used, method of instrument application (by sketch) and correction factors. Verify access to valves, dampers and equipment for test and balancing.

D. Sample Forms: Submit forms showing application of procedures to typical systems. Forms shall be of AABC format.

E. AABC test sheets required are as follows:
   1. Air Moving Equipment Test Sheet
   2. Exhaust Fan Test Sheet (Supply, Return, Relief Fans)
   3. Air Inlet and Outlet Test Sheet
   4. Water Balance Element Test Sheet
   5. Circulating Water Pump Data Sheet
   6. Duct Traverse Zone Totals Sheet
   7. Duct Traverse Readings Sheet

1.7 CONTRACTOR COOPERATION

A. The Balancing Contractor shall check and report defects or deficiencies that may affect balancing.
   1. Mechanical Contractor shall cooperate with the Balancing Contractor to:
      a. Provide sufficient time before final completion date and individual equipment manufacturer's start-up so that balancing can be accomplished.
      b. Provide immediate materials, labor and tools to make corrections without delay.
      c. Place heating, ventilating and air-conditioning systems and equipment into full operation and continue the operation for each working day of testing and balancing.
      d. Advise Testing and Balancing Contractor of changes made to the system during construction.
      e. Install required test holes or wells complete with removable and replaceable plugs or caps.
      f. Make necessary revisions to controls, valves, dampers, and fan drives and consult with equipment manufacturers as required to achieve the specified system's performance.
      g. Supply and install dampers as specified and shown on the Drawings, and where required to obtain final system balance.
      h. Provide lifts, ladders, scaffolds, tools and labor to assist the work of the Balancing Contractor, including removing ceiling tiles, guards, adjusting pulleys, belts; replace when finished.
      i. Building Management System Contractor shall cooperate with and work with the Balancing Contractor when setting damper linkages, minimum outside air dampers, and other air volume devices, and shall be available for readjusting of dampers, devices or controls that are not properly calibrated.
      j. Set pressure-regulating and -reducing valves to operating and code conditions.
      k. Check and set relief and safety valves to code requirements.
      l. Clean strainers. Check air filters immediately prior to air balancing.
      m. Open fire dampers. Provide certification of damper operation as required by Section 23 33 13 – Dampers.
      n. Verify return air openings have been provided in full height walls as specified, shown on the Drawings or as required for proper balancing and system operation.

05/03/13 PERMIT SET

PART 2 - PRODUCTS

2.1 INSTRUMENTS

A. Instruments for testing and balancing of air and hydronic systems shall have been calibrated within a period of 6 months and verified for accuracy prior to start of work.

B. Submit a list of equipment, which will be used for the balancing of systems and test and calibration certification by an independent instrument calibration laboratory indicating date of test, and test results showing accuracy and repeatability are within limitations acceptable to the AABC.

PART 3 - EXECUTION

3.1 GENERAL PROCEDURE

A. Balance to maximum measured flow deviation from specified values of 10 percent at terminal device and 5 percent at equipment or mean sound-level deviation of 15 decibels.

B. Permanently mark settings on valves, splitters, dampers and other adjustment devices.

C. Take measurements to verify balance has not been disrupted or that such disruption has been rectified.

D. At final inspection, recheck random selections of data recorded in report. Recheck points or areas as selected and witnessed by the Engineer.

E. At the completion of balancing procedures, allow for a minimum of 2 days for the Engineer to witness test procedures and conduct operational tests.

3.2 SITE VISITS

A. A review of the installation shall be made prior to commencing balancing work and any additional dampers or valves required for proper balance shall be reviewed with the Engineer and the Contractor.

B. The Test and Balance Contractor shall visit the job site a minimum of 3 times during the ductwork, equipment and piping installations. Site Visit Reports shall be submitted to the Engineer listing any deficiencies found. Identify in the Report any additional balancing valves or dampers required.

3.3 ACCEPTANCE

A. Mechanical systems shall not be considered ready for final inspection until balancing results acceptable to the Engineer are obtained.

B. If it is found that the specified airflows cannot be achieved on portions of the system, the actual conditions shall be reported to the Engineer for consideration of corrective action before continuing the balance procedure.

C. If measured flow at final inspection shows deviation of 10 percent or more or mean sound-level deviation of 10 decibels or more from the certified report listings for more than 10 percent of selected areas, the Report shall be rejected.

D. If Report is rejected, systems shall be rebalanced and a new certified report submitted.

3.4 BALANCING REPORT

A. Submit a draft copy of reports prior to final acceptance of project. Provide copies of final report for inclusion in Operating and Maintenance Manuals.

B. Provide reports in durable soft cover, 3-ring binder manuals, complete with table of contents, indexing tabs and cover identification at front and side.

C. Include types, serial number and dates of calibration of instruments.

D. Record test data on a sepia made from the latest available revised set of mechanical shop drawings and submit copies upon completion of the Balancing Contract.

E. Install at each piece of mechanical equipment a “Data Register” showing significant operating temperatures, pressures, amperes, voltage, and brake horsepower. “Data Register” shall be

enclosed in a hard, clear plastic holder securely attached to the equipment or to a wall in the adjacent area.

F. Submit with Report, fan and pump curves with operating conditions plotted. Submit grille and diffuser shop drawings and diffusion factors.

G. Report shall be indexed as follows:
   1. Air
      a. Summary
      b. Procedure
      c. Instrumentation
      d. Drawings
      e. Equipment Summary
      f. Fan Sheets
      g. Fan Curves
      h. Fan Profile Data
      i. Static Data
      j. Air Monitoring Station Data
      k. Traverse Data and Schedule
      l. Terminal Unit Summary
      m. Outlet Data Summary and Schematics (per system)
      n. Building Pressurization Data
      o. Smoke Exhaust Mode Data
      p. Stairway and Stair Vestibule Pressurization Data
      q. Smoke Control System Testing (Smoke Control Zone Supply, Relief and Exhaust Capacities)
   2. Fire Damper Certification
   3. Copy of Contractor's Certification

3.5 AIR SYSTEM PROCEDURE

A. Execute air systems balancing for each air system in accordance with AABC specifications and as described herein.

B. Make tests with supply, return and exhaust systems operating and doors, windows, closed or in their normal operation condition.

C. Test and adjust fan or blower speed to design requirements.

D. Test and record motor full load amps. Record each installed motor manufacturer and motor efficiency.

E. Traverse main supply air ducts, using a pitot tube and manometer. Calibrate the manometer to read two significant figures in velocity pressure ranges. Take a minimum of 16 readings per traverse. The intent of this operation is to measure by traverse the total air quantity supplied by the fan and to verify the distribution of air to zones. A "main duct" is defined as any of the following:
   1. A duct serving 5 or more outlets.
   2. A duct serving 3 or more branch ducts.
   3. A duct serving a hydronic coil.
   4. A zone duct from a fan-powered VAV terminal unit.
   5. A duct emanating from a fan discharge or plenum and terminating at one or more outlets.

F. Submit data in support of supply fans deliveries by the following four methods. For return, relief and exhaust fans, methods 1 and 4 are sufficient:
   1. By summation of the air quantity readings at inlets or outlets.
   2. By duct traverses of main supply ducts.
   3. By rotating vane traverse across the filter bank or coil bank.
   4. By plotting revolutions per minute and static pressure readings on the fan curve. Air density corrections must be indicated.

G. Test and record required and measured system static pressures; filter differential, coil differential and fan total static pressure.

H. Test and adjust systems for design recirculated airflow rates.

I. Test and adjust system for design outside airflow rates.

J. Test and record entering and leaving air temperatures.

K. Install one-inch roll media filters upstream of air filters to impose 90 percent of the manufacturer's recommended final filter air pressure drop.

L. Adjust main supply and return ducts to proper design flow rates.

M. Inspect and confirm all fire dampers are open, all smoke dampers and fire/smoke dampers are in their correct position, all duct access doors are closed and fire damper fusible links are accessible.

N. Adjust zones to proper design, supply and return flow rates.

O. Test and adjust each air inlet and air outlet and transfer duct to within 10 percent of design requirements.

P. Identify each air inlet, air outlet, transfer duct and transfer wall opening as to location and area.

Q. Identify and list size, type and manufacturer of diffusers, grilles, registers and testing equipment. Use manufacturer's rating on equipment to make required calculations.

R. In readings and tests of diffusers, grilles and registers, report the required face and neck velocity, test face and neck velocity, and required air pressure drop and flow rate. Test after adjustments.

S. Building Management System Contractor shall set adjustments of automatically operated inlet vanes, cones, plugs and all dampers to operate as indicated in cooperation with Balancing Contractor.

T. Adjust diffusers, grilles and registers to minimize drafts, dumping, and to prevent "short circuiting" between supply and return outlets.

U. Use volume control devices to regulate air quantities only to extent that adjustments do not create objectionable air motion or sound levels. Effect volume control by duct internal devices such as dampers and splitters. Remove air slots on return air troffers to achieve adequate relief and minimize pressure drop into the ceiling plenum.

V. Vary total system airflow rates by adjustment of fan speeds or fan volume-varying devices. Vary branch air quantities by damper regulation.

W. Record installed fan drive assemblies; fan sheaves, motor sheaves, belts and motors.

X. For fans with two-speed motors, execute the entire air systems procedure at both speeds. This also applies to fans with variable frequency drives when used in normal mode and smoke control modes.

Y. The final balanced condition of each area shall include testing and adjusting of pressure conditions. Test and record building pressurization levels in variable volume systems throughout full range of fan delivery rates, under both heating and cooling conditions. For multi-story buildings, test pressure conditions at ground, intermediate and upper levels. Front doors, stair and vestibule doors, exits and elevator shafts shall be checked for airflow so that leakage does not cause excessive or abnormal pressure conditions. Document abnormal building leakage conditions noted.

Z. Complete balancing to achieve positive building pressure unless otherwise instructed. A positive pressure relative to outside of 0.05-inch water gauge minimum and 0.10-inch water gauge maximum shall be achieved, measure with negligible, outside wind velocity.

3.6 BALANCING DATA

A. Air Handling Equipment Installation Data:
   1. Manufacturer, model and size
   2. Arrangement, discharge and class
   3. Motor type, horsepower, speed, efficiency, voltage, phase, cycles and full load amperes
   4. Location and final identification

B. Air Handling Equipment Design Data:
   1. Total airflow rate
   2. Static pressure across coil, filter, damper, mixing box sections and total

3. Motor horsepower, speed, efficiency, voltage and amperes
4. Fan speed and brake horsepower
5. Hydronic coil inlet and outlet, dry bulb temperatures
6. Initial filter air pressure drop

C. Air Handling Equipment Recorded Data:
1. Total airflow rate
2. Static pressure across coil, filter, damper, mixing box sections and total
3. Fan speed and brake horsepower
4. Motor operating amperes
5. Inlet and outlet, dry bulb temperatures
6. Filter air pressure drop

D. Duct Air Quantities: Mains, Branches, Outside Air and Exhausts (Maximum and Minimum):
1. Duct sizes
2. Number of pressure readings
3. Sum of velocity measurements
4. Average velocity
5. Duct recorded airflow rate
6. Duct design airflow rates

E. Air Inlets and Outlets:
1. Inlet/outlet identification location and designation
2. Manufacturer's catalogue identification and type
3. Application factors
4. Design and recorded velocities
5. Design and recorded airflow rates
6. Deflector vane or diffuser cone settings

F. Building Pressurization Data:
1. Outside air temperatures and humidities
2. Outside wind velocity
3. Building pressures plotted with respect to systems
4. Supply air, return air and exhaust airflow rates for varying damper positions
5. Locations of pressure measuring points, inside and outside building

G. Smoke Exhaust Data: Supply and Exhaust Flow Rate

H. Air Heating and Cooling Equipment Design Data:
1. Heat transfer rate
2. Water pressure drop across coil
3. Air static pressure drop
4. Entering and leaving water temperatures
5. Entering and leaving air dry and wet bulb temperatures

I. Air Heating and Cooling Equipment Recorded Data:
1. Element type and identification
2. Entering and leaving air dry and wet bulb temperatures
3. Entering and leaving water temperatures
4. Water pressure drop across coil
5. Water pressure drop across bypass valve
6. Air static pressure drop
7. Air and water flow rates
8. Adjusted temperature rise or drop

END OF SECTION

05/03/13 PERMIT SET

SECTION 230700

INSULATION FOR HVAC

PART 1 - GENERAL

1.1 WORK INCLUDED

A. The work of this Section shall include, but is not limited to, the following:
   1. Duct insulation, jackets
   2. Piping insulation, jackets
   3. Equipment insulation and covering

1.2 RELATED DOCUMENTS

A. Section 23 05 01 – HVAC General Provisions
B. Section 23 23 00 – Refrigerant Piping
C. Section 23 31 00 – HVAC Ducts and Casings
D. Section 23 81 29 – Variable Refrigerant Volume (VRV) System
E. Division 7 – Thermal and Moisture Protection – Section(s) re: Applied Fireproofing

1.3 REFERENCE STANDARDS

Published specifications standards, tests or recommended methods of trade, industry or governmental organizations apply to work in this Section where cited below:

A. ASTM – American Society for Testing and Materials
   1. ASTM B 209 – 2007: Standard Specification for Aluminum and Aluminum-Alloy Sheet and Plate
   2. ASTM C 411 – 2005: Standard Test Method for Hot-Surface Performance of High-Temperature Thermal Insulation
   3. ASTM C 518 – 2004: Standard Test Method for Steady-State Thermal Transmission Properties by Means of the Heat Flow Meter Apparatus
   4. ASTM C 533 – 2007: Standard Specification for Calcium Silicate Block and Pipe Thermal Insulation
   5. ASTM C 534/C 534M – 2008: Standard Specification for Preformed Flexible Elastomeric Cellular Thermal Insulation in Sheet and Tubular Form
   6. ASTM C 547 – 2007 Revised 2008: Standard Specification for Mineral Fiber Pipe Insulation
   7. ASTM C 553 – 2008: Standard Specification for Mineral Fiber Blanket Thermal Insulation for Commercial and Industrial Applications
   8. ASTM C 612 – 2004 Revised 2008: Standard Specification for Mineral Fiber Block and Board Thermal Insulation
   9. ASTM E 84 – 2009: Standard Test Method for Surface Burning Characteristics of Building Materials
   10. ASTM E 119 – 2009: Standard Test Methods for Fire Tests of Building Construction and Materials
   11. ASTM E 136 – 2009: Standard Test Method for Behavior of Materials in a Vertical Tube Furnace at 750 degrees C
   12. ASTM E 814 – 2009: Standard Test Method for Fire Tests of Penetration Firestop Systems

B. OPL – Omega Point Laboratories, Inc.
   Acquired (2005) by the ETL SEMKO division of Intertek Group plc.
   1. Duct System – design numbers GD531F, GD532F, etc.
   2. Plenum Protection System – design numbers PP100F, PP101F, etc.
   3. Through Penetration System – design numbers FS557W, FS558F, FS559W, FS560F, FS561F, FS562W, FS563W, etc.

C. NFPA – National Fire Protection Association
   1. NFPA 96, Edition 08 – Standard for Ventilation Control and Fire Protection of Commercial Cooking Operations

05/03/13 PERMIT SET

2. NFPA 225, Edition 09 – Model Manufactured Home Installation Standard
3. NFPA 262, Edition 07 – Standard Method of Test for Flame Travel and Smoke of Wires and Cables for Use in Air-Handling Spaces.

D. UL – Underwriters Laboratories Inc.
1. UL 723 – 2008: Test for Surface Burning Characteristics of Building Materials
2. UL 1978 – 2009: Grease Ducts (Sections 12 and 13)

E. International Mechanical Code

F. Uniform Mechanical Code

G. International Building Code

H. California Building Code

I. California Energy Code

1.4 QUALITY ASSURANCE

A. All insulation shall be in accordance with Title 24.

B. Insulation supplier and insulation installer shall have a minimum of 5 years' successful installation experience on projects of similar scope to this project.

1.5 SUBMITTALS

A. Product Data: Provide product description, current Product Data Sheets, list of materials and thickness for each service or equipment scheduled, locations, and manufacturer's installation instructions.

B. Submit details of sheet metal boxes for pieces of insulated equipment. Refer to sub-Clause 2.06, A.7.

C. Samples: Submit selection and verification samples of fire-rated duct wrap.

D. Quality Assurance / Control Submittals:
1. Test Reports: Upon request, provide fire tests from recognized laboratory.
2. Certificates: Submit manufacturer's certificate that product(s) meet or exceed specified requirements.

1.6 ENVIRONMENTAL REQUIREMENTS

A. Maintain ambient temperatures and conditions during storage and installation of all products required by manufacturers of adhesives, mastics, and insulation cements.

B. Protect insulation from contact with water.

PART 2 - PRODUCTS

2.1 ACCEPTABLE MANUFACTURERS

A. Fiberglass: Johns Manville; Knauf; Owens Corning.

B. Calcium Silicate: Johns Manville; Extol of Ohio, Inc.

C. Elastomeric: Armacell; Aeroflex.

D. Cellular Glass: Pittsburgh Corning.

E. Adhesives and Sealers: Ductmate; Benjamin Foster (BF); 3M; Childers.

F. Jackets:
1. Metal: Childers; RPR Products.
2. PVC: Ceel-Co; PIC Plastics.
3. Other: Venture Tape; Polyguard.

G. Pre-Molded Fittings, Valves, Strainers and Equipment Insulation: Insul-Therm International; Extol of Ohio, Inc.; or approved equal.

2.2 GENERAL

A. Conform to application schedule for type and thickness of insulation.

B. Insulation, jacket, facing and adhesives shall be non-combustible material meeting Code requirements and fire and smoke hazard ratings as tested by procedure ASTM E 84, National Fire Protection Association 225, and UL 723, not exceeding Flame Spread 25 and Smoke Developed 50.

C. Adhesive, mastic or insulating material shall not contain asbestos.

D. Vapor jacket permeance shall be 0.02 perms or less.

E. Jacket puncture resistance shall be 50 units (Beach) or greater.

2.3 PIPE INSULATION MATERIALS

A. Glass Fiber: ASTM C 547; rigid molded, non-combustible.
1. Installed 'K' Value: 0.23 BTU-inch per hour-foot²-degree F at 75 degrees F.
2. Maximum Service Temperature: 850 degrees F.
3. Vapor Retarder Jacket: White kraft paper, vinyl coated, embossed and reinforced with glass fiber yarn and bonded to aluminum foil, secure with self-sealing longitudinal laps and butt strips.

B. Hydrous Calcium Silicate: ASTM C 533; rigid molded pipe.
1. Installed 'K' Value: 0.40 BTU-inch per hour-foot²-degree F at 300 degrees F.
2. Maximum Service Temperature: 1200 degrees F.
3. Tie Wire: 16-gauge stainless steel with twisted ends on maximum 12-inch centers.

C. Elastomeric Foam: ASTM C 534/C 534M flexible cellular elastomeric, molded or sheet.
1. Installed 'K' Value: 0.27 BTU-inch per hour-foot²-degree F at 75 degrees F.
2. Maximum Service Temperature: 220 degrees F.

D. Field-Applied Jackets:
1. PVC Plastic (PVC): One-piece molded type fitting covers and sheet material, gloss white. Connections shall be pressure-sensitive color-matching vinyl tape.
2. Canvas Jacket (CJ): UL Listed fabric, 6 ounce per square yard, plain weave cotton treated with dilute fire-retardant lagging adhesive.
3. Vapor Barrier Jacket (VBJ): Aluminum foil/polyester laminated with permeance rating of 0.0 per as tested in accordance with ASTM E 46, Procedure A. Venture Clad Plus (1579CW) by Venture Tape, Polyguard Zero-Perm or equal.

2.4 PIPE INSULATION SCHEDULES

A. Insulation Schedules:

Service	Temperature Range (degrees F)	Material	Runouts*	Insulation Thickness (inches) for Pipe Sizes:				
				1 and less	1.25 to 2	2.5 to 4	5 to 6	8 and up
Refrigerant	All	Elastomeric foam, glass fiber, cellular glass	1	1	1.5	1.5	1.5	1.5
Condensate drains (i.e. bodies and piping) above hung ceilings	All	Elastomeric foam, glass fiber	–	0.5	0.5	0.5	–	–

* Runouts are up to 2-inch piping directly connected to a fan coil, heat pump, AC unit, unit heater, terminal unit or radiation and not exceeding 12 feet in length.

B. Fittings, Valves and Flanges:
1. Use factory pre-molded fittings of the same materials and thickness as the adjacent pipe insulation. Such fittings shall be applied to all 90°s, 45°s, Tee's, flanges, and valves.
2. Where pre-molded insulation fittings are not manufactured, insulate fittings, flanges, strainers and valves with mitered segments of the same density as the adjoining pipe covering. Vaporseal for cold (below dew point) applications using adhesive with open weave

glass mesh lay in while wet. Provide a final coat of adhesive. Overlap glass mesh and outer coat adjacent covering by a minimum of 2 inches. Adhesive shall be IC 501 or BF 30-35.

3. Provide insulation for the removable covers and flanges of pipe strainers on cold services with built-up sections of glass fiber pipe covering, arranged to facilitate servicing of the strainer. Complete applications with vaporseals as specified above. Vapor barriers shall be sealed and continuous through guides, hangers, walls, sleeves, etc. Adhesives and coatings shall be as noted herein.
4. Insulate fittings, flanges, valves, etc. for services where calcium silicate insulation is specified with mineral wool cement of equal thickness to the pipe insulation. Apply evenly and finish with glass cloth.

C. Jacketing Schedule:

Service	Location	Jacket Type
Refrigerant piping	Interior locations	ASJ or painted finish
	Exterior locations	AL or VBJ
Condensate	All locations	ASJ or painted finish

2.5 DUCTWORK INSULATION

A. Materials:

1. Flexible Glass Fiber: ASTM C 553, formaldehyde-free flexible blanket.
   a. Installed 'K' Value: 0.27 BTU-inch per hour-foot²-degree F at 75 degrees F.
   b. Density: 0.75 pounds per cubic foot.
   c. Vapor Barrier Jacket: Aluminum foil reinforced with fiberglass yarn and laminated to fire-resistant kraft paper, secured with 2-inch wide UL Listed pressure-sensitive tape and outward clinched expanded staples and vapor barrier mastic as needed. Maximum vapor barrier perm rating shall not exceed 0.02 perms.
2. Rigid Glass Fiber: ASTM C 612, rigid board.
   a. Installed 'K' Value: 0.23 BTU-inch per hour-foot²-degree F at 75 degrees F.
   b. Density: 6.0 pounds per cubic foot.
   c. Vapor Barrier Jacket: Aluminum foil reinforced with fiberglass yarn and laminated to fire-resistant kraft paper, secured with 2-inch wide UL Listed pressure-sensitive tape and outward clinched expanded staples and vapor barrier mastic as needed.
3. Canvas Jacket: UL Listed fabric, 6 ounces per square yard, plain weave cotton treated with dilute fire-retardant adhesive.
4. Covering for Outdoor Ducts:
   a. Aluminum Jacket: 0.016-inch thick sheet, stucco-embossed finish, with longitudinal slip joints and 2-inch laps.
   b. Ultra-violet light-resistant painted polyvinyl chloride covering with joints secured and sealed with adhesive.

B. Schedule:

Service	Material	Thickness (inches)
Supply ducts (cooling and heating systems)	Flexible glass fiber	1.5 (min. R value of 4.2)
Supply and return ducts in unconditioned spaces (attics, outdoors, crawlspaces, equipment rooms)	Rigid glass fiber	2 (min. R value of 8.0)
Outside air intake ducts	Rigid glass fiber	2
Supply plenums (cooling and heating systems)	Rigid glass fiber	2 (min. R value of 8.0)

C. Wherever external duct insulation is specified and internal acoustic treatment of equivalent insulating effect is also required by the Drawings or Specifications for the same location, the external insulation may be omitted.

PART 3 - EXECUTION

3.1 EXAMINATION AND PREPARATION

A. Verify that ductwork has been tested for leakage in accordance with Section 23 31 00 – HVAC Ducts and Casings before applying insulation materials.

B. Verify that all surfaces are clean, dry and free of dirt, duct, debris, moisture or foreign material.

3.2 INSTALLATION

A. Install materials in accordance with manufacturer's recommendations, building codes and industry standards.

B. Verify piping has been pressure-tested as specified in Section 23 21 13 – Hydronic Piping before applying insulation materials to pipe joints.

C. Continue insulation and vapor barrier through penetrations.

D. Piping, Valve and Accessories Insulation:

1. Locate insulation and cover seams in least visible locations where exposed.
2. Neatly finish insulation at supports, protrusions, and interruptions.
3. Provide insulated pipes, fittings, valves and accessories conveying fluids below ambient temperature with continuous vapor retarder jackets with self-sealing laps. Insulate complete system and provide molded flexible polyvinyl chloride jacket(s) for all fittings and valves. Vaporseal all jacket seams as recommended by the insulation manufacturer.
4. For insulated pipes, fittings, valves and accessories conveying fluids above ambient temperature, secure jackets with self-sealing lap. Bevel and seal ends of insulation at equipment, flanges and unions.
5. Protect pipe insulation at hangers, guides, and rollers with 20-gauge galvanized metal shields, one-third the insulation circumference in width and minimum 10 inches in length up to 2½-inch pipe size, 12 inches in length on pipes 3-inch and larger, on the outside of the insulation and vapor barrier or jacket. Center shield on hanger and hold shield in place by straps or by manufactured centering tabs or channels on the shield itself. Do not pierce the insulation with hangers.
6. Provide insert between support shield and piping. Fabricate of calcium silicate, rigid phenolic or other heavy density non-deforming insulating material suitable for temperature. Length of insulation inserts shall match support shield length as specified.
7. For exterior applications or locations where abrasion or damage may occur, provide weather protection jacket. Insulated pipe, fittings, accessories joints, and valves shall be covered with ultra-violet light-resistant painted polyvinyl chloride or aluminum jacket. Jacket seams shall be located on bottom side of horizontal piping.
8. Apply prefabricated sectional insulation for straight pipes neatly fitted around the piping, and sealed with adhesive. Apply adhesive to only one side of each joint and not to pipe surface.
9. Seal all joints with BF 30-35 fire-resistant vapor barrier mastic. Oversized pipe sections or board type insulation may be used to fabricate and install insulation around pipe specialties. All void spaces shall be firmly filled with flexible insulation to support oversized pipe insulation.
10. Secure sectional insulation with 0.02-inch thick by 1/2-inch wide aluminum bands manufactured by Childers, or RPR Products nylon ties, on 24-inch centers for pipe sizes 2 inches and larger. Install at least two (2) bands per section of insulation.
11. Insulate refrigerant vertical riser support clamps.
12. Insulate and thoroughly vaporseal control valve bodies where the valve actuator penetrates the insulation.
13. Thoroughly vaporseal the ends of all refrigerant pipe, valve and fitting insulation sections to prevent condensation from wicking between sections.
14. Replace any self-sealing insulation or lap that is found to be not sealing properly. Do not use staples to secure the insulation or coverings.

E. Ductwork Insulation:
   1. Provide insulated ductwork conveying air below ambient temperature with continuous vapor-retardant jacket. Seal all vapor-retardant jacket seams, punctures, tears and penetrations with UL Listed tapes or vapor-retardant adhesive.
   2. Provide insulated ductwork conveying air above ambient temperature with or without vapor-retardant jacket. Where service access is required, bevel and seal ends of insulation.
   3. Continue insulation through non-fire-rated walls, sleeves, hangers, and other duct penetrations.
   4. The underside of ductwork 24 inches or greater shall be secured with mechanical fasteners and speed clips spaced approximately 18 inches on center. The protruding ends of the fasteners shall be cut off flush after the speed clips are installed, and then, when required, sealed with the same tape as specified above.
   5. For exterior applications, provide internal duct insulation.

3.3 FIRE BARRIER DUCT WRAP

A. PROTECTION
   1. Protect installed work from damage due before and after installation.

END OF SECTION

05/03/13 PERMIT SET

SECTION 232300

REFRIGERANT PIPING

PART 1 - GENERAL

1.1 WORK INCLUDED

A. The work of this Section shall include, but is not limited to, the following:
   1. Piping
   2. Fittings
   3. Jointing Materials
   4. Welding and Jointing Procedures
   5. Cleaning of Piping Systems
   6. Testing of Piping Systems

1.2 RELATED DOCUMENTS

A. Divisions 21 and 22 - Fire Protection / Plumbing Work

B. Section 23 05 01 - HVAC General Provisions

C. Section 23 05 29 - Hangers and Supports for HVAC

D. Section 23 05 48 - Vibration and Seismic Controls for HVAC

E. Section 23 07 00 - HVAC Insulation

F. Section 23 09 23 - Direct Digital Control System for HVAC

G. Section 23 81 29 – Variable Refrigerant Volume (VRV) System

1.3 REFERENCE STANDARDS

Published specifications standards, tests or recommended methods of trade, industry or governmental organizations apply to work in this Section where cited below:

A. ANSI – American National Standards Institute
   1. ANSI/ASME Standard B16.9 – 2007: Factory-Made Wrought Steel Butt-Welding Fittings
   2. ANSI/ASME Standard B31.1 – 2007: Power Piping

B. AHRI (ARI) – Air Conditioning and Refrigeration Institute

C. ASHRAE – American Society of Heating, Refrigeration and Air Conditioning Engineers

D. ASME – American Society of Mechanical Engineers
   1. ASME Standard for Boiler and Pressure Vessel Code – 2007
      a. ASME BPVC – Section IX - Welding and Brazing Qualifications
      b. ASME BPVC–VIII–1 #U00081 Section VIII – Rules for Construction of Pressure Vessels - Division 1
   2. ASME Standard B1.20.1 – 1983: Pipe Threads, General Purpose, Inch
   3. ASME Standard B16.15 – 2006: Cast Copper Alloy Threaded Fittings, Classes 125 and 250
   4. ASME Standard B16.18 – 2001 Revised 2005: Cast Copper Alloy Solder Joint Pressure Fittings
   5. ASME Standard B16.21 – 2005: Nonmetallic Flat Gaskets for Pipe Flanges
   6. ASME Standard B16.22 – 2001 Revised 2005: Wrought Copper and Copper Alloy Solder Joint Pressure Fittings
   7. ASME Standard B16.24 – 2006: Cast Copper Alloy Pipe Flanges and Flanged Fittings, Classes 150, 300, 400, 600, 900, 1500 and 2500
   8. ASME Standard B16.26 – 2006: Cast Copper Alloy Fittings for Flared Copper Tubes

E. ASTM – American Society for Testing and Materials
   1. ASTM B 32 – 2008: Standard Specification for Solder Metal
   2. ASTM B 88 – 2003: Standard Specification for Seamless Copper Water Tube
   3. ASTM B 816 – 2000 Revised 2009: Standard Specification for Liquid and Paste Fluxes for Soldering of Copper and Copper Alloy Tube

05/03/13 PERMIT SET

4. ASTM B 828 – 2002: Standard Practice for Making Capillary Joints by Soldering of Copper and Copper Alloy tube and Fittings
5. ASTM C 591 – 2008: Standard Specification for Unfaced Preformed Rigid Cellular Polyisocyanurate Thermal Insulation
6. ASTM D 638 – 2008: Standard Test Method for Tensile Properties of Plastics
7. ASTM D 1330 – 2004: Standard Specification for Rubber Sheet Gaskets

F. AWS – American Welding Society
1. AWS A5.8/A5.8M – 2004: Specification for Filler Metals for Brazing and Braze Welding
2. AWS C3.4M/C3.4 – 2007: Specification for Torch Brazing
3. AWS D10.12M/D10.12 – 2000: Guide for Welding Mild Steel Pipe

G. ISO – International Organization for Standardization
1. ISO 9001, 4th Edition – 2008: Quality Management System Requirements

H. NFPA – National Fire Protection Association
1. NFPA Standard 70, Edition 08 – National Electrical Code
2. NFPA Standard 99, Edition 05 – Standard for Health Care Facilities

I. UL – Underwriters Laboratories Inc.
1. UL Standard 719 – 2006 Revised 2007: Nonmetallic-Sheathed Cables
2. UL Standard 910 – 1998: Test for Flame-Propagation and Smoke Density Values for Electrical and Optical-Fiber Cables Used in Spaces Transporting Environmental Air

J. UMC – Uniform Mechanical Code

K. The State of California Codes

L. Local Codes and Standards

1.4 QUALITY ASSURANCE

A. Comply with the applicable provisions and recommendations of the standards and codes listed in Paragraph 1.03 and the requirements of the listed related documents.

B. Welding materials and labor to conform to ASME Code and applicable state Labor Regulations.

C. All welders shall be certified by ANSI/ASME B31.1 “Power Piping” or “Qualification Tests” in Section IX of the ASME Boiler and Pressure Vessel Code: Welding and Brazing Qualifications.

D. All castings used for coupling housings, fittings, valve bodies, etc., shall be date stamped for quality assurance and traceability.

E. Each length of pipe, fitting, trap, fixture or device used in any piping system shall be stamped or indelibly marked with type, weight, quality and manufacturer’s name or mark.

1.5 SUBMITTALS

A. Submit the following for review:
1. Product Data: Submit manufacturer’s latest information on construction details, rated capacity data, operating characteristics and installation data.
2. Submit, for all equipment provided under this Section, dimensions, accessories, required clearances, electrical requirements and wiring diagrams specific to this project that clearly differentiates between manufacturer-installed and field-installed wiring and location and size of all required field connections.
3. Submit manufacturer’s installation instructions, operation data, start-up instructions, maintenance data, parts list and controls specific to this project, accessories and maintenance data.
4. Submit schedule indicating the ANSI, ASME, ASTM, AWWA Standard Specification number of the pipe being proposed along with its type and grade and sufficient information to indicate the type and rating of fittings for each service.
5. Submit ISO 9001 certifications where required by specifications.
6. Submit shop drawings indicating anchoring details, anchor points, guide details, etc.
7. Submit manufacturer’s data for fittings.
8. Submit dimensioned drawings locating pipe penetrations through walls, slabs and other structural elements, anchor and guide locations, etc.

05/03/13 PERMIT SET

9. Submit pipe expansion and flexibility calculations.
10. Submit test reports on all systems tested. Tests required by Authorities Having Jurisdiction over the work shall be submitted on appropriate forms to the satisfaction of such authorities.

PART 2 - PRODUCTS

2.1 ACCEPTABLE MANUFACTURERS

A. Welding Fittings: Hackney, Bonney Forge Foundry, (Weld-o-lets), Weldbend

B. Dielectric Fittings:
1. Unions: Watts, Perfection, Central Plastics, EPCO, Zurn, Hart
2. Insulating Flanges: Watts, Capital, Central Plastics, EPCO, Walter Vallett Co., V-Line
3. Flange Kits: Calpico, Central Plastics, Advanced Plastics
4. Couplings: Calpico, Lochinvar
5. Nipples: Perfection, Sioux Chief, Victaulic Company

C. Flange Gaskets: John Crane, Garlock, Manville, Goodrich

D. Pre-Insulated Pipe and Fittings: Ricwil, Rovanco

E. Cleaning of Piping Systems: Use chemicals as recommended by a water treatment specialist

F. Testing of Piping Systems: American Gas and Chemicals “Leak-Tee”, Cosgille Scientific “Sho Gas”, Flamort Chemical “Detect-A-Leak”, Highside Chemicals “Leak Finder Foam”

2.2 SCHEDULE OF PIPING SYSTEMS

Service	Material	Type	Weight
Refrigerant	Copper	Type L	Hard, capped and nitrogen filled

2.3 SCHEDULE OF PIPING FITTINGS

Service	Size	Material	Type	Weight
Refrigerant	All	Wrought copper	Silver solder, copper-phosphorus alloy	Standard

PART 3 - EXECUTION

3.1 SYSTEMS INSTALLATION

A. Refrigerant:
1. Clean, dehydrate, and cap refrigerant piping. Ensure that entire system is clean and dry during installation. Clean tubing by means of swab saturated in methyl alcohol. Draw through tubing as many times as necessary to thoroughly clean and dry interior of tubing and to eliminate formation of copper oxide.
2. Before refrigerant lines are silver brazed, flush all air from tubing and pass slow-running stream of dry nitrogen through system during brazing process. Purge lines completely and maintain nitrogen flow at steady rate of not less than three cubic feet per hour.
3. Refrigeration piping shall be installed in accordance with the requirements of AHRI (ARI), ASHRAE and ASTM.
4. All solder joints shall be ASTM Grade 4 or 5 and have a melting point of approximately 1250 degrees F. Solder impurities shall not exceed 0.15 percent. Tubing shall be new and delivered to the job site with the original mill end caps in place. Clean and polish all joints before soldering. Avoid prolonged heating and burning during soldering. Purge all lines with nitrogen during soldering. Provide manual shut-off and check valves as required. After brazing, interior of refrigerant lines must be clean and bright.
5. Comply with EPA Section 608 requirements: Prohibition of Venting and Regulation of CFC Requirements. No refrigerant shall be vented directly to the atmosphere except that which may escape through leaks in the system during leak testing. During evacuation procedures, use equipment designed to recover and allow recycling of the refrigerant.
6. Install core in filter dryer after leak test but before evacuation.
7. Evacuate refrigerant system with vacuum pump until temperature of 35 degrees F is indicated on vacuum dehydration indicator.
8. During evacuation, apply heat to pockets, elbows, and low spots in piping.

05/03/13 PERMIT SET

9. Maintain vacuum on system for minimum of 5 hours after closing valve between vacuum pump and system.
10. Break vacuum with refrigerant gas; allow pressure to build up to 2 psi.
11. Complete charging of system, using new filter dryer core in charging line. Provide full operating charge.
12. After completion of the leak test, evacuate the system with a vacuum pump to an absolute pressure not exceeding 1500 microns while the system ambient temperature is above 60 degrees F. Break the vacuum to 2 psig with the refrigerant to be used in the system. Repeat the evacuation process, again breaking the vacuum with refrigerant. Install a drier of the required size in the liquid line, open the compressor suction and discharge valves, and evacuate to an absolute pressure not exceeding 500 microns. Leave the vacuum pump running for not less than two hours without interruption. Raise the system pressure to 2 psig with refrigerant and remove the vacuum pump.
13. Charge refrigerant directly from original drums through a combination filter-drier. Each drier may be used for a maximum of three cylinders of refrigerant and then must be replaced with a fresh drier. Charge the system by means of a charging fitting in the liquid line. Weigh the refrigerant drum before charging so that an accurate record can be kept of the weight of refrigerant put in the system. If refrigerant is added to the system through the suction side of the compressor, charge in vapor form only.
14. Install branch tie-in lines to parallel compressors equal length, and pipe identically and symmetrically.
15. Slope refrigerant piping as follows
    a. Install horizontal hot gas discharge piping with 1/2-inch per 10 feet downward slope away from the compressor.
    b. Install horizontal suction lines with 1/2-inch per 10 feet downward slope to the compressor, with no long traps or dead ends that may cause oil to separate from the suction gas and return to the compressor in damaging slugs.
    c. Liquid lines may be installed level.
16. Install traps and double risers where indicated, and where required to entrain oil in vertical runs.
17. Install strainers immediately ahead of each expansion valve, solenoid valve, hot gas bypass valve, compressor suction valve, and as required to protect refrigerant piping system components.
18. Install moisture/liquid indicators in liquid lines between filter/driers and thermostatic expansion valves and in liquid line to receiver.
19. Install moisture/liquid indicators in lines larger than 2-1/8 inch OD, using a bypass line.
20. Install unions to allow removal of solenoid valves, pressure regulating valves, expansion valves, and at connections to compressors and evaporators.
21. Install flexible connectors at the inlet and discharge connection of compressors.
22. Verify actual evaporator applications and operating conditions, and adjust thermostatic expansion valve to obtain proper evaporator superheat requirements. Adjust controls and safeties. Replace damaged or malfunctioning controls and equipment with new materials and products.

END OF SECTION

05/03/13 PERMIT SET

SECTION 233100

HVAC DUCTS AND CASINGS

PART 1 - GENERAL

1.1 WORK INCLUDED

A. The work of this Section shall include, but is not limited to, the following:
   1. Ductwork
   2. Plenums
   3. Fasteners and Sealants
   4. Duct Cleaning
   5. Access Doors
   6. Duct Testing
   7. Installation of Equipment and Materials Furnished Under Other Sections
   8. Duct Drain Piping
   9. Installation of Duct Smoke Detectors

1.2 RELATED DOCUMENTS

A. Section 23 05 01 - HVAC General Provisions
B. Section 23 05 29 - Hangers and Supports for HVAC
C. Section 23 05 48 - Vibration and Seismic Controls for HVAC
D. Section 23 05 93 - Testing, Adjusting and Balancing for HVAC
E. Section 23 07 00 - HVAC Insulation
F. Section 23 33 13 - Dampers
G. Section 23 37 00 - Air Outlets and Inlets
H. Section 23 40 00 - HVAC Air Cleaning Devices
I. Section 23 81 29 - Variable Refrigerant Volume (VRV) System

1.3 REFERENCE STANDARDS

A. The latest editions of specifications standards, tests or recommended methods of trade, industry or governmental organizations apply to work in this Section where cited below:
   1. ASHRAE – American Society of Heating, Refrigeration and Air Conditioning Engineers Handbooks (Latest Editions)
   2. SMACNA – Sheet Metal and Air Conditioning Contractors National Association, Inc.:
      a. HVAC Duct Construction Standards, Metal and Flexible, 3rd Edition, 2005
      b. Fire, Smoke and Radiation Damper Installation Guide for HVAC Systems, 5th Edition, 2002
      c. HVAC Systems Testing Adjusting and Balancing, 3rd Edition, 2002
      d. Seismic Restraint Manual, Guidelines for Mechanical Systems, 1998
      e. HVAC Air Duct Leakage Test Manual 1st Edition, 1985
   3. IMC – International Mechanical Code
   4. UMC – Uniform Mechanical Code, Standard 6-2: Standard for Metal Ducts, Latest Edition
   5. AABC – Associated Air Balance Council Manual: National Standards for Total System Balance
   6. ANSI – American National Standard Institute
   7. NFPA – National Fire Protection Association Standards:
      a. NFPA 90A, Installation of Air Conditioning and Ventilating Systems
      b. NFPA 90B, Warm Air Heating and Air Conditioning Systems
      c. NFPA 96, Exhaust Systems
      d. NFPA 255, Standard Method of Test of Surface Burning Characteristics of Building Materials – Current Edition.

8. ASTM – American Society for Testing and Materials:
   a. ASTM E84, Standard Test Method for Surface Burning Characteristics of Building Materials, March 2008 Edition.
   b. ASTM B209-07, Standard Specification for Aluminum Aluminum-Alloy Sheet and Plate – Current Edition
   c. ASTM A653/A653M – 08, Standard Specification for Sheet Steel, Zinc-Coated (Galvanized) or Zinc-Iron Alloy-Coated (Galvannealed) by the Hot Dip Process – Current Edition.
9. UL – Underwriter's Laboratories, Standards for Safety:
   a. UL Standard 181 – Standard Factory-made Air Ducts and Air Connectors, 10th Edition, May 2005.
   b. UL Standard 181A – Standard for Closure Systems for Use With Rigid Air Ducts, 3rd Edition, May 2005.
   c. UL Standard 181B – Standard for Closure Systems for Use With Flexible Air Ducts and Air Connectors, 2nd Edition, May 2005.
   d. UL Standard 555 – Standard for Fire Dampers, 7th Edition, July 2006.
   e. UL Standard 555C – Standard for Ceiling Dampers, 3rd Edition, October 2006.
   f. UL Standard 555S – Standard for Smoke Dampers, 4th Edition, June 2006.
   g. UL Standard 723 – Standard for Test for Surface Burning Characteristics of Building Materials, 10th Edition, September 2008.
10. The State of California Codes
11. Local Codes

B. Above-referenced standards may be superseded by notes and details on the Drawings and in any specification.

C. Where two or more references conflict, the most stringent, as determined by Engineer, shall take precedence.

1.4 QUALITY ASSURANCE

A. Comply with NFPA 90A – 'Installation of Air Conditioning and Ventilation Systems' unless otherwise specified or referenced.

1.5 PERFORMANCE REQUIREMENTS

A. Sheetmetal, ductwork, plenums and accessories shall meet or exceed the performance requirements specified in this specification section.

1.6 SUBMITTALS

A. Submit the following for review:
   1. Submit ductwork shop fabrication and shop construction standards prior to submittal of ductwork shop drawings.
   2. Ductwork shop fabrication and shop construction standards shall include all applicable shop details and product data. Include the following:
      a. Duct reinforcement tables for all pressure classes, duct materials (galvanized steel) and ductwork shapes (rectangular, round) to be used on this project
      b. Duct reinforcement tables shall include material gauges, transverse joint reinforcement type and standard shop joint spacing
      c. Transfer duct construction detail
      d. Acoustical lining, perforated metal liner, adhesive, nosing and fastening cuts and details
      e. Installation details for volume dampers (single blade and multi-blade type), and remote- and cord-operated remote volume dampers
      f. Duct access doors
      g. Duct fitting construction details such as rectangular and radius elbows, turning vanes, offsets, branch connections, etc.
      h. Duct support and attachment details
      i. Flanged duct connection details for all systems and each manufacturer used on project. Minimum duct construction gauges shall be as per SMACNA duct

reinforcement tables. Duct gauges may not be reduced based on alternative jointing manufacturer's recommendations
j. Ductwork sealant
k. Diffuser ductwork connection details
l. Duct penetrating full height partition details
m. Flexible connection details
n. Duct and plenum construction details

3. Product Data including manufacturer's installation instructions, application, materials of construction, gauges, descriptive literature, and maintenance data for:
   a. Ductwork and fittings
   b. Plenums
   c. Fasteners and sealants
   d. Access doors
4. Shop Drawings:
   a. Fully coordinated 1/4-inch scale dimensioned duct layout drawings of all mechanical rooms, riser elevations, and floor plans, giving complete dimensions for location, elevation, and clearance, showing work of all other Sections and Divisions. Layout drawing shall be prepared with architectural floor plan and ceiling grid background indicating room numbers, ceiling heights, location and elevations of structural components, light fixtures, all piping and other equipment
   b. 1/4-inch scale dimensioned duct layout drawings of all mechanical rooms, riser elevations, and floor plans, giving complete dimensions for location, elevation, and clearance, showing work of other Sections and Divisions wherever necessary to show coordination
   c. Access door details
   d. Flexible connection details
   e. Duct and plenum construction details
   f. Provide a separate set of dimensioned drawings or a partial set at enlarged scale showing all penetrations required for ductwork through structural members, floor and roof slabs, concrete walls and precast walls
   g. Duct materials, reinforcement and construction schedules
   h. Duct support and attachment details
5. All sheet metal shop drawings shall be drawn in double line indicating actual dimensions of ductwork, fittings and equipment. Shop drawings submitted with ductwork drawn in single line shall be returned without review.
6. Sheet metal shop drawing shall indicate, as a minimum, the following data:
   a. Ductwork sizes and section breaks
   b. Location of acoustical lining
   c. Bottom of duct elevations for all ducts or other services in conflict with ductwork
   d. Diffuser face size, neck size and air quantity
   e. All volume dampers
   f. All air conditioning units
   g. Dimensioned drawings showing penetrations required for ductwork through structural members, floor and roof slabs, concrete walls and precast walls
   h. Duct support and attachment details
7. HVAC design drawings shall not be submitted as sheet metal shop drawings.
8. Prior to mounting or hanging of mechanical equipment or ductwork, obtain approval from Engineer for proposed method of mounting particularly in existing buildings. Submit weights and location of all mechanical equipment and ductwork to the Engineer for approval well in advance of general construction work to allow sufficient time for any structural evaluation, critique and necessary redesign to accommodate the installation.

1.7 DUCT CLASSIFICATION

A. Duct classification is based on pressure classification as scheduled in Table 1-1 and as described in the 3rd Edition, 2005 SMACNA HVAC Duct Construction Standards. Comply with NFPA 90A

05/03/13 PERMIT SET

when ducts traverse through smoke zones. Comply with UBC/UMC when more stringent than NFPA 90A or SMACNA standards.

B. Longitudinal Seams: Pittsburgh lock shall be used on all longitudinal seams; snap-lock or button punch seams are not acceptable. If SMACNA seal class A or B is specified, the longitudinal seam shall be sealed from the inside.

C. Minimum pressure classification for each duct system and appropriate SMACNA table references are as follows:

Duct System	SMACNA Table No.	SMACNA Pressure Classification (inches water gauge)	SMACNA Seal Classification
All rectangular supply ducts on systems with variable or constant volume terminal units from fan discharge to terminal unit	1-6	±3	A
All rectangular supply ducts on systems without terminal units from fan discharge to air outlet	1-5	±2	B
All rectangular ductwork downstream of terminal units. All rectangular return ducts and exhaust ducts	1-4	±1	B
All round supply ducts on systems with terminal units from fan discharge to terminal unit	3-2A	+4	A
All round supply ducts on systems without terminal units from fan discharge to air outlet, and all ductwork downstream of terminal units	3-2A	+2	B
All round return ducts and exhaust ducts	3-2B	-2	B

PART 2 - PRODUCTS

2.1 ACCEPTABLE MANUFACTURERS

A. Spiral Oval and Round Ducts: United McGill “Uni-form”, Semco, Metco, Ductmate Industries “Spiralmate” and “Ovalmate”

B. Duct Connection Systems: Ductmate Industries “Ductmate 35” and “Ductmate 45”, Nexus, Ward

C. Flexible Connections: Ventfabrics “Ventglas” and “Ventlon”, Duro Dyne “Insulfab”, Advance Elastomeric Systems, Ductmate Industries “PROFlex”

D. Flexible Ducts: Automatic Industries “Thermaflex M-KE”, United McGill, Genflex “IL”

E. Spring Fasteners: Dzus, Simmons “Quick-Lock”

F. Duct Protective Coatings: Wisconsin Protective Coating, Varni-lite of America

G. Duct Sealants: Minnesota Mining and Manufacturing, Benjamin Foster, Miracle Adhesive, United McGill, Hardcast, Ductmate Industries “PROSeal”

H. Spin-in Fittings: Young Regulator, Modular Metals

I. Flexible Duct Clamps: Aeroquip Ideal, Tridon, Young Regulator

J. Access Doors, Ducts: Ventfabrics, Duro Dyne, Ruskin. Use “Ventlok” No. 140 latches, Ductmate Industries, hinged type only

K. Access Doors, Plenums: Ventfabrics, Duro Dyne, Elgen

L. Duct Joint Tape: Hardcast

2.2 MATERIALS

A. Sheet Metal:
   1. Steel Sheets:
      a. Cold rolled steel sheets, lock forming quality meeting ASTM A653/A653M-08
      b. Black or galvanized as specified
      c. Galvanizing: 1.25 ounces per square foot both sides

05/03/13 PERMIT SET

2. Stainless Steel Sheets: ANSI Type 316 as specified, with Finish No. 2B or No. 3
3. Lead Sheets: Federal Specification QQ-L-301a, Grade C., 6 millimeters thick
4. Aluminum sheets: ASTM B209-07, maximum 0.4 percent copper. Provide mill-finish commercial sheets; 16,000 pounds per square inch minimum strength.

B. Miscellaneous Products:
1. Screws and Rivets:
   a. Same material as sheet, except as noted
   b. Zinc- or cadmium-plated with neoprene grommets, permitted on galvanized sheets
   c. Minimum screw size: No. 10
   d. Minimum rivet size: 4 pound
2. Duct Sealants:
   a. Sealing compound shall be flexible water-based adhesive sealant designed for use in all pressure classes. Sealant shall be UV-resistant, conform to ASTM E84, be UL 723 Listed and meet NFPA requirements for Class 1 ductwork.
   b. Flange Gasket: Provide a continuous butyl rubber gasket which complies with UL Standard 181 and 723 testing and meets MIL-C 18969B and TTS-S-001657. This material shall not contain vegetable oils, fish oils, or any other type of materials that will support fungal or bacterial growth. Gasket width shall match duct flange or angle connection with a minimum thickness of 1/8 inch. Ductmate Industries Model 440 gasket tape or approved equal.
   c. Liner Adhesive used to adhere insulation to metal duct shall comply with NFPA 90A and UL 723 specifications. Ductmate Industries PROtack Liner Adhesive or approved equal.
   d. Lagging Adhesive shall be applied to insulated ductwork where the insulated edge of the duct would otherwise be exposed to the airflow. Materials shall comply with ASTM E 84, NFPA 255 or UL 723 testing. Ductmate Industries Lag-It or approved equal.
3. Hard-setting joint tape shall be a UL Listed two-part tape consisting of woven fiber tape impregnated with activator/adhesive of polyvinyl acetate type.
   a. Flame spread: 10 maximum
   b. Smoke developed: 0
4. Spring Fasteners: Self-ejecting oval head stud and receptacle with screwdriver slot.
5. Provide angles, tie rods and structural steel shapes for reinforcing ducts in accordance with SMACNA HVAC Duct Construction Standards, except as noted.
6. Slide-on Transverse Joint Connectors:
   a. Prefabricated slide-on transverse duct connectors and components shall be accepted. Ducts constructed using pre-fabricated systems shall refer to the manufacturer guidelines for sheet gauge, intermediate reinforcement size and spacing, and proper joint reinforcement. Ductmate Industries, Ward, Nexus, or approved equal.
   b. Formed-on flanges shall be constructed as T-25 A/B flanges, of which the construction guidelines are given in Figure 1-4 of the SMACNA HVAC Duct Construction Standards, Metal and Flexible, 3rd Edition, 2005. No other construction standards pertaining to formed-on flanges shall be accepted.
   c. Formed-on flanges shall include the use of corner bolts, cleats and gaskets.
   d. All components shall be metal unless other materials are required by code, or specified.

C. Flexible Connections shall be used where ductwork connects to rotating, vibrating or noise producing machinery. Connectors shall be attached in such a manner to provide an airtight and waterproof seal.
1. Conform to NFPA 90A and SMACNA HVAC Duct Construction Standards, except as noted.
2. Provide roll formed 1.5-inch long minimum collar, or match length and width of fan, plenum or machinery connection companion flange:
   a. Aluminum, 1 gauge heavier than ductwork, plenum, fan or machinery connected.
   b. Galvanized steel, 26 gauge minimum or matching gauge of ductwork, fan, plenum or machinery connected.
   c. Other materials same as gauge and material as ductwork, plenum, fan or machinery connected.

3. Provide 2-inch slack in fabric and install to allow minimum movement of 1 inch.
4. Length of fabric connections: 4 inches minimum; 10 inches maximum.
5. Materials:
   a. Indoor installations shall be a UL Listed, fire-retardant neoprene- or vinyl-coated woven fiberglass fabric. Minimum density 30 ounces per square yard and rated to 200 degrees F.
   b. Outdoor installations shall be a UL Listed ultraviolet light resistant Hypalon-coated woven fiberglass fabric. Minimum density 24 ounces per square yard and rated to 250 degrees F.
   c. Flame spread rating: 25 maximum, smoke developed rating: 50 maximum
   d. Insulated connections:
      1) Two layers of fabric with 1-inch thick fiberglass, 1.5 pound density.
      2) Performance as previously specified in 2.02-C-5-b.

D. Turning Vanes:
1. Galvanized steel ductwork: Galvanized steel or painted black steel, except as noted.
2. Other ductwork: Same material as ductwork.
3. Construction shall meet or exceed SMACNA "HVAC Duct Construction Standards".
   a. Use of single wall vanes with 3/4-inch trailing edge shall be limited to maximum air velocity of 2000 feet per minute and a maximum duct dimension of 18 inches.
   b. Double wall vanes shall be used in ducts where air velocity exceeds 2000 feet per minute, or any duct with a dimension over 18 inches.
   c. Vane length: Provide separate equal-size sections for vane length greater than those previously indicated in Paragraph 1.03: Referenced Standards.
   d. Vane runners: SMACNA Type 1 or 2 acceptable.
   e. Tab spacing shall be as specified in Figure 2-3 of the SMACNA Manual, HVAC Duct Construction Standards, Metal and Flexible, 3rd Edition, 2005. Rail systems with non-standard tab spacing shall not be accepted.

E. Rectangular main duct to round duct take-off fittings shall be factory-fabricated spin-in fittings.
1. Die-formed, same material as ductwork.
2. Pressure ratings shall be equal to the duct pressure rating in which they are installed.
3. Provide balancing damper with locking regulator.

2.3 ROUND AND OVAL DUCTWORK

A. General:
1. Provide factory-fabricated spiral lock-seam duct, except as otherwise indicated.
2. Factory-fabricated longitudinal seams are acceptable for ducts larger than standard factory sizes and are required where branch sizes, fitting sizes, air inlet or outlet sizes exceed the seam-to-seam dimension.
3. Round and oval ducts joints shall be constructed as follows:
   a. Up to 20-inch equivalent diameter: Interior slip coupling beaded at center and fastened to the duct with screws. Seal joint with approved sealant continuously applied around joint prior to assembly and after fastening. Make certain that majority of sealant is on the interior of the joint.
4. Factory-fabricated fittings shall be same manufacturer as duct and the same material and construction as duct in which installed.
   a. Tees: 45-degree conical tap with center-line take-off, unless otherwise indicated. Provide continuously welded seams.
   b. Elbows:
      1) Segmented seams or standing segmented seams.
      2) Continuously welded for positive or negative 2-inch water gauge and greater:
         a) 2 gores – less than 35 degrees
         b) 3 gores – 36 degrees through 71 degrees
         c) 5 gores – over 71 degrees to 90 degrees maximum
   c. For ducts listed below, the following are acceptable:
      1) Die-stamped radius elbows for ducts 8 inches or smaller.
      2) Segmented elbows as specified above for ducts larger than 8 inches.

05/03/13 PERMIT SET

3) Not acceptable:
   a) Corrugated or flexible metal duct
   b) Pleated elbows
4) Adjustable elbows are acceptable only for:
   a) Downstream of fan coil units
   b) Portions of exhaust systems and return systems under negative pressure not to exceed 1-inch water gauge

B. Single-Wall Ducts:
   1. Materials of construction:
      a. Galvanized steel: Supply and return, general and toilet exhaust ducts.

C. Factory-Fabricated Accessories:
   1. Couplings
   2. Volume dampers
   3. Bellmouth fittings
   4. End caps
   5. Angle rings
   6. Insulation ends: Connections of double- to single-wall ducts
   7. Access doors: Hinged, framed or pressure relief per SMACNA "HVAC Duct Construction Standards" Figure 2-10

2.4 FLEXIBLE DUCTS

A. General:
   1. Provide UL 181 and UL 181B, Class I air duct with polymeric liner, labeled for compliance with UMC. Use only where indicated.
   2. Flexible ducts shall meet criteria as defined in Section 3 of the SMACNA Manual, HVAC Duct construction Standards, Metal and Flexible, 3rd Edition, 2005.

B. Static Pressure Class up to 1-Inch Water Gauge.
   1. Insulated Flexible Duct:
      a. Maximum working pressure 1-inch water gauge
      b. Nominal 1-inch insulation with vapor barrier
      c. Maximum thermal conductivity 0.27 BTUH per square foot per degree F per inch at 75 degrees F
   2. Similar to Thermaflex M-KE
   3. Use at air inlets and air outlets

C. Provide factory-fabricated collar.

D. Flexible ductwork clamps shall be adjustable screw type stainless steel straps approved for use with flexible ductwork.

E. Regenerative noise due to air turbulence with the flexible duct shall not exceed the following sound power levels for a 12-inch diameter duct with an air speed of 1,000 feet per minute:

	Sound Power Levels, dB re: 10^{-12} Watts, at Octave Band Center Frequency, Hz				
	125	250	500	1000	2000
Maximum Regenerative Noise	30	31	30	22	20

2.5 ACCESS DOORS

A. Access doors shall comply with the SMACNA – Duct Construction Standards, Metal and Flexible, 3rd Edition, 2005, except as noted.

B. Duct access doors shall be insulated or uninsulated, same as duct. Make completely accessible.
   1. Minimum Size:
      a. 20 inches by 14 inches, 18 inches by 16 inches or larger.
      b. Ducts less than 16 inches: one dimension 20 inches; other dimension 2 inches less than duct width or height.
      c. Larger sizes where required for access.

2. Systems designed for 2-inch water gauge and less (SMACNA Seal Class B or C) shall utilize a hinged and cam, square framed access door.
3. All other systems shall utilize a hinged access door. Construct door in accord with Figure 2-10 of the SMACNA Manual "HVAC Duct Construction Standards, Metal and Flexible" 3rd Edition, 2005.
4. Provide in following locations:
   a. Coils in ducts: entering and leaving side
   b. Automatic dampers: linkage side
   c. Balancing dampers and backdraft dampers
   d. Fire dampers, smoke dampers and combination fire/smoke dampers
   e. Duct-mounted smoke detectors, sprinkler heads, heat detectors
   f. Duct humidifiers
   g. Filter banks in ducts
   h. Fan bearings enclosed in ducts
   i. Inlet side of each single width centrifugal fan
   j. Inlet and outlet sides of each in-line centrifugal and axial fan or sound attenuator
   k. All controls, sensing, processing, transmitting and actuating devices
   l. Duct drains
5. Provide permanent label on all access doors identifying the concealed components as specified above.

C. Casing and Plenum access doors shall be uninsulated or insulated, same as casings and plenums.
1. Latches similar to Ventlok No. 202
2. Minimum size: 24-inch by 60-inch
3. Provide larger size where required for equipment access, service, maintenance, removal and replacement.
4. Provide in following locations:
   a. Fan or equipment enclosures
   b. Filters
   c. Fire alarm devices, sprinkler heads
   d. Dampers
   e. All controls, sensing, processing, transmitting and actuating devices
5. Doors shall open against pressure.

PART 3 - EXECUTION

3.1 DUCTWORK INSTALLATION

A. General:
1. Construct with gauges, joints, bracing, reinforcing, and other details per latest CMC, SMACNA, or NFPA unless specified otherwise. Comply with most stringent.
2. Ductwork shall not exceed the deflection limits established in UMC Standard 6-2- Standard for Metal Ducts. Maximum allowable deflection for transverse joints and intermediate reinforcements shall not exceed 0.25-inch for duct widths up to 100 inches and shall not exceed 0.3 percent of the span for duct widths greater than 100 inches.
3. Construct ducts with NFPA 90A gauges when traversing smoke zones.
4. Construct of galvanized sheet metal, except where otherwise indicated or specified.
5. Duct dimensions indicated are net, inside, clear, dimensions. For internally lined ducts, add lining thickness to determine metal duct dimensions.
6. At exposed duct penetrations of walls, floors and ceilings, provide sheet metal angle type escutcheons fastened to the duct only.
7. Provide minimum 26-gauge sheet metal construction for ducts crossing fire-rated corridors. Refer to Architectural drawings for wall types and ratings.
8. Install exposed ducts as high as possible but within 48 inches of ceiling. Coordinate with other trades to maintain not less than 90 inches clearance above finished floor, unless indicated otherwise.

9. Transitions: Pitch sides of duct in “diverging” or “converging” airflow.
   a. Maximum of 15-degree included angle.
   b. Exception: Provide 7.5-degree concentric diverging velocity cones at the discharge of vane axial fans.
10. Duct Openings: Provide openings where required to accommodate thermometers, smoke detectors, controllers, wiring, conduit, tubing etc. Insert through air-tight rubber grommets.
   a. Provide pitot tube openings where required for testing of systems:
      1) Include threaded metal cap, spring loaded cap or threaded plug to eliminate any air leakage.
      2) For Pitot tube tests install Ventlok No. 699 and 699-2 instrument test holes.
      3) Coordinate locations of openings with balancing contractor.
   b. Where openings are provided in insulated ductwork for insertion of instruments, install insulation material metal sleeve, flanged on one end for use as plug. Reseal vapor barrier.
11. Duct lining: Install lining in ducts and plenums as specified in Section 23 33 19 - Acoustics.
12. Flexible Duct Connections.
   a. Install:
      1) At connections to fans and fan coils.
      2) As indicated on the Drawings or specified in other sections.
13. Refer to SMACNA duct construction standards for outdoor flexible connection details.
14. Volume dampers:
   a. Install damper as specified in Section 23 33 13 - Dampers and Section 23 37 00 - Air Outlets and Inlets.
   b. Install damper in branch duct for all air inlets and outlets at accessible location most remote from air inlet or outlet.

B. Elbows:
1. Use radius elbows in rectangular ducts unless otherwise indicated. Centerline radius shall be a minimum of 150 percent of duct width.
2. Where space does not permit duct radius specified above, install short radius or square elbow with vanes per SMACNA duct construction standards.
3. Do not use turning vanes in the following applications:
   a. Grease and vapor exhausts
   b. Fume hood exhaust
   c. Breeching
   d. Toilet exhaust ducts
   e. Any gravity ductwork
   f. Clothes dryer exhaust
   g. Hoistway vent
4. For 2-inch water gauge or above pressure class ductwork, spot weld turning vanes to duct.
5. For all 2-way splits in supply, return and exhaust systems, provide 2 elbows, proportionally sized per SMACNA Duct Standards, either radius or square. A single fitting is acceptable with turning vanes and duct openings sized as specified.

C. Rectangular Duct Joints and Seams:
1. Provide standing, longitudinal seams, except where flush drive slip seam is specified.
2. Use grooved seam for exposed ducts except in garages, electrical or mechanical rooms, and where required for clearance.
3. “Duct Connection System” joints, may be used in lieu of standing seams. Plastic clips are only allowed for breakaway connections.
4. Fabricate ductwork and coordinate installation such that seams or joints shall not be cut or interrupted for the installation of branches, fittings, dampers, access doors, air inlets or air outlets.

D. Joint Sealing:
1. Seal to SMACNA Seal Classifications previously specified by one of the following methods:
   a. 6-ounce canvas strip, 6 inches wide adhered with lagging adhesive.
   b. Hardcast Two Part II Duct Sealing System: DT-5400 tape with RTA-50 sealant.
   c. Applications as recommended by manufacturer.

05/03/13 PERMIT SET

2. Seal punched holes and corner cracks (Duct Tape Not Allowed).
3. After installation and testing, reseal joints found to be leaking.

E. Ducts Out-of-Doors:
1. Ducts shall be water-tight.
2. Construct as follows to assure water run-off and no standing water.
   a. Arrange standing seam, internal reinforcement, joints, flanges and access doors to prevent accumulation, ponding or pooling of water for both horizontal and vertical ductwork.
   b. Locate longitudinal seams at bottom of duct.
   c. Slope entire top of duct down toward sides. Coordinate duct slope with roof slope to avoid situations where roof slope and duct slope cancel each other out resulting in an unsloped top of duct.
   d. Provide mastic within sheet metal joints.
3. Installations and penetrations shall be in accordance with SMACNA Guidelines for Roof-Mounted Outdoor Air-Conditioner Installations.
4. Provide sheet metal flashing or skirt at flexible connections to fans or HVAC units to avoid water accumulation.
5. Coordinate exact duct routing and duct support locations on roofs with roofing contractor. Roof-mounted duct support details shall be approved by the roofing contractor and the Engineer prior to fabrication and installation.

3.2 ROUND AND OVAL DUCTWORK

A. Joints between ducts:
1. Construct with beaded sleeve joints.
2. Mechanically fasten with sheet metal screws or pop rivets except for fume exhaust, dust collection, clothes dryer ductwork.
3. Duct sealer shall be applied to male end and over all joint-, screw- and rivet-heads.
4. Seal as specified for rectangular ductwork.

B. Joints, duct and fitting:
1. Slip projecting collar of fittings into duct with a minimum insertion length of 2 inches.
2. Apply duct sealer. Seal as specified for rectangular ductwork.
3. Mechanical fastener schedule:

Duct Diameter	End Lap	No. of Rivets/Screws in Slip Joint
8 inches	0.75-inch	4
9 to 16 inches	1.00-inch	6

C. Junctions between ducts:
1. Branch take-off: 45 degrees

D. Horizontal supports shall be one-piece clamp band strap, minimum one strap per section. Support fittings as required by SMACNA.

E. Vertical supports shall be one of the following:
1. Clamp bands with extended ends supported at each floor.
2. Clamp bands with knee bracing.
3. Pedestal at base of vertical riser.

F. Use angle iron braces for duct reinforcing. Refer to the SMACNA HVAC Duct Construction Standards, Metal and Flexible, 3rd Edition, 2005, figure numbers 1-9 through 1-12.

3.3 FLEXIBLE DUCTWORK

A. Provide continuous, single pieces.

B. Maximum Length:
1. Above 1-inch water gauge static pressure: 12 inches or as specified.
2. Under 1-inch water gauge static pressure: 6 feet.
3. Local codes or union rules take precedence and may reduce the maximum lengths specified.

05/03/13 PERMIT SET

C. End Connections:
   1. Connect to duct collars, terminal unit connections and round air outlets per manufacturer's instructions.
   2. Secure with strap clamps specified above.

D. Installation:
   1. Support per SMACNA.
   2. Flexible duct is not allowed in lengths greater than that specified. Bends, twists or sagging of flexible duct is not acceptable.
   3. Minimum inside bending radius shall be a minimum of two duct diameters. If minimum radius cannot be maintained, provide sheet metal plenum over air outlet and connect flexible duct to side of plenum. Paint interior flat back.
   4. Maximum – one 90-degree turn.
   5. Install as straight as possible.

E. Flexible duct is only allowed above lay-in type accessible ceilings only.

3.4 DUCT HANGERS AND SUPPORTS

A. General:
   1. Support horizontal ducts with hangers of size and spacing as indicated in SMACNA Duct Construction Standards.
   2. Attachment to structure shall be as specified in Section 23 05 29 - Hangers and Supports for HVAC.
   3. Vibration isolation and seismic restraints for ducts shall be as specified in Section 23 05 48 - Vibration and Seismic Controls for HVAC.
   4. Seismic restraints shall comply with SMACNA or CMC, whichever is more stringent.

B. Horizontal Duct Supports:
   1. Install hangers at each change in direction of duct.
   2. Strap hangers:
      a. Extend strap down both sides of ducts.
      b. Turn under bottom two inches minimum. Provide a minimum of 2 screws per side.
      c. Screw hangers to bottom, upper and lower sides of ducts at 12 inches on center maximum.
      d. Seal all screw penetrations of ductwork.
   3. Angle hangers:
      a. Per SMACNA Guidelines for Seismic Restraints.
      b. Seal all penetrations of ductwork.

C. Vertical Duct Supports:
   1. Support vertical ducts at every floor.
   2. Use angles or channels riveted to ducts. Seal all duct penetrations.
   3. Set angles or channels on floor slab or structural steel members placed in opening, unless otherwise noted.

3.5 DUCT AND PLENUM PRESSURE TESTING

A. Scope of Pressure Testing:
   1. Test ductwork, including plenums, as scheduled below, for leaks. Pressure testing shall include applicable supply, return and exhaust systems.
   2. Apply positive pressure test to all ducts intended to operate under positive pressure of 2 inches water gauge or greater, such as:
      a. Supply ducts from fans to air outlets
      b. Supply ducts from fans to air terminal units
      c. Discharge ducts from exhaust fans outside
   3. Apply negative pressure test to all ducts intended to operate under negative pressure, such as:
      a. Return ducts from air intakes to fans except on portions of duct exposed in spaces served by duct
      b. Toilet exhaust ducts from air inlets to fans

05/03/13 PERMIT SET

c. General exhaust ducts from air inlets to fans

B. General:
1. Advise Engineer at least 2 weeks in advance of testing so that test can be witnessed.
2. Use portable high-pressure blower and necessary instruments. Provide duct connections required for air flow and pressure testing.
3. Test before sections are concealed.
4. Furnish signed reports of results of tests to Engineer.
5. Test Pressures shall:
   a. 150 percent of scheduled static pressure for fan or unit.

C. Procedure:
1. Seal openings in ducts and plenums to be tested.
2. Connect test apparatus to test section using flexible duct connection or hose.
3. Close damper on blower suction side, to prevent excessive buildup of pressure.
4. Start blower and gradually open damper on suction side of blower.
5. Test for audible air leaks in ducts and plenums per referenced standards.
   a. Repair and silence all audible leaks.
   b. Do not retest until sealants have set.
6. Test for rate of air leakage in ducts and plenums per referenced standards. Determine amount of air leakage by make-up air flow measurements.
7. Repair air leaks as required and retest.
8. Visually mark tested sections with certification sticker and initials of field test inspector.

D. Ductwork leakage rates shall comply with SMACNA "HVAC Air Duct Leakage Test Manual" 1st edition for leakage Class 6 for rectangular ductwork, and leakage Class 3 for round ductwork.

3.6 DUCT CLEANING

A. Clean Duct Systems.

B. Repair any damage(s) resulting from duct-cleaning process.

END OF SECTION

05/03/13 PERMIT SET

SECTION 233313

DAMPERS

PART 1 - GENERAL

1.1 WORK INCLUDED

A. The work of this Section shall include, but is not limited to the following:
   1. Static and Dynamic Fire Dampers
   2. Smoke Dampers and Combination Fire/Smoke Dampers
   3. Balancing Dampers
   4. Backdraft Dampers
   5. Heavy Duty Backdraft Dampers
   6. Installation of Automatic Control Dampers
   7. Remote Operators for Balancing Dampers

1.2 RELATED DOCUMENTS

A. Section 23 05 01 - HVAC General Provisions
B. Section 23 05 93 - Testing, Adjusting and Balancing for HVAC
C. Section 23 09 23 - Direct Digital Control System for HVAC
D. Section 23 31 00 - HVAC Ducts and Casings
E. Section 23 37 00 - Air Outlets and Inlets
F. Division 26 - Electrical Specifications

1.3 REFERENCE STANDARDS

A. AMCA 500-L-07, Laboratory - Methods of Testing Louvers for Rating.
B. CSFM - California State Fire Marshall Listing for Fire Damper and Smoke Damper.
C. NFPA 90A - Installation of Air Conditioning and Ventilating Systems.
D. NFPA 92A - Standard for Smoke-Control Systems Utilizing Barrier and Pressure Differences, 2009 Edition.
E. UL 555 - Standard for Fire Dampers, 7th Edition, 2006.
F. UL 55C - Standard for Ceiling Dampers, 3rd Edition, October, 2006.
G. UL 555S - Standard for Smoke Dampers, 4th Edition, June 1999.

1.4 QUALITY ASSURANCE

A. Manufacturer: Test and qualify with UL a complete range of damper sizes covering dampers specified. Testing one size only is not acceptable.
B. Fire dampers shall open and close under HVAC system operating conditions in accordance with UL 555.
C. Smoke dampers and combination fire/smoke dampers shall open and close under HVAC system operating conditions in accordance with UL 555S.
D. Pressure drop ratings of dampers shall be based on tests and procedures performed in accordance with AMCA 500-L-07.
E. Air Flow Rating: UL approved for dual directional airflow.
F. Actuator shall have a minimum five-year manufacturer's warranty.

1.5 SUBMITTALS

A. Dynamic fire damper submittal shall include performance data developed for UL 555 standard tests. Maximum allowed air flow rate and static pressure for duct- and non-duct mounted installations shall be documented.
B. Submit smoke damper and combination fire/smoke damper schedule indicating size, service, location, designator identification, number of actuators, and air velocity through the damper.

05/03/13 PERMIT SET

C. Submit construction details, hardware details, gauges and certified dimensioned shop drawings for all damper types.

D. Manufacturer's product data:
   1. Include leakage, pressure drop, and maximum pressure data.
   2. Indicate materials, construction, dimensions, and installation details.
   3. Verify conformance to NFPA 90A, NFPA 92A, UL 555, UL 555S, CSFM, AMCA and applicable building codes.
   4. Verify damper pressure drop ratings based on tests and procedures performed in accordance with AMCA 500-L-07.
   5. End switches, wiring diagrams, firefighters relays and override components.
   6. Provide actuator electrical power requirements for both running and holding states and quantities per damper.

PART 2 - PRODUCTS

2.1 ACCEPTABLE MANUFACTURERS

A. Static and Dynamic Fire Dampers: Ruskin DIBD2 Style B, IBD2 Style B, or approved equal by Air Balance, AWV, Pottorff, Greenheck.

B. Smoke Dampers: Ruskin SD60, SD37, SDRS25 (round) or approved equal by Air Balance or Pottorff.

C. Combination Fire/Smoke Dampers: Ruskin FSD60, FSD60-3 (3-hour), FSD 37, FSDR25 (round) or approved equal by Air Balance or Pottorff.

D. Grille Access Fire Smoke Dampers: Ruskin FSD60GA or equal by Air Balance or Pottorff.

E. Actuators: Belimo FSNF24, Honeywell ML8115 or equal.

F. Remotely Adjustable Operators with Balancing Dampers:
   1. Remote adjustable operator shall be Young Regulator Model Number 270-896 with ‘C’ bracket.
   2. Rectangular Balancing Damper shall be Young Regulator Model Number 830ACC for external control or Model Number 830ACC-2 for internally controlled applications.
   3. Round Balancing Damper shall be Young Regulator Model Number 5020CC for external control or Model Number 5020CC-2 for internally controlled applications.

G. Backdraft Dampers: Ruskin CBD4 counterbalanced, Ruskin BD2 non-counterbalanced or equal by Air Balance, AWV, Arrow.

H. Heavy Duty Backdraft Dampers: Ruskin CBS92 counterbalanced, or equal by Air Balance, AWV, Arrow.

I. Manual Balancing Damper: Ruskin MD35, MD25, MDRS25.

2.2 FIRE DAMPERS

A. Provide static and dynamic fire dampers in ducts penetrating fire-rated walls, floors, and ceilings as required by NFPA, local codes and authorities regardless if shown or not shown on the Drawings. Dampers shall be factory-marked for static or dynamic use.

B. Provide conveniently located access doors, of ample size for resetting the dampers. Duct-mounted grilles, registers or diffusers can be used for access as long as such access is readily available as determined by the Engineer or Authority Having Jurisdiction.

C. Integral sleeve frame shall be minimum 20-gauge roll formed, galvanized steel. Comply with manufacturer’s installation instructions and Sheet Metal and Air Conditioning Contractors National Association (SMACNA) Details.

D. Dampers shall be spring-loaded with shutter stored out of the airstream to provide minimum 95 percent free area.

E. Dynamic rated fire dampers shall be labeled in accordance with UL 555. Static fire dampers shall be labeled in accord with UL 555.

F. Dampers shall be actuated by UL-approved fusible link. Upon operation of the link, the dampers shall close automatically and remain tightly closed. Fusible links shall operate approximately 50

degrees F above the maximum temperature the duct system will encounter under normal operation, but not less than 165 degrees F.

G. Dampers shall be of types acceptable to the local authorities, Owner and Engineer.

2.3 SMOKE DAMPERS, COMBINATION FIRE/SMOKE DAMPERS

A. Provide dampers of size and location as indicated on the Drawings and as specified.

B. Frame shall be a minimum of 16 gauge galvanized steel formed into a structural hat channel shape with tabbed corners for reinforcement.

C. For air velocities up to 1500 feet per minute, the blades shall be single skin 16-gauge minimum galvanized steel with three longitudinal grooves for increased stiffness and reinforcement. For air velocities up to 4000 feet per minute, the blades shall be double skin 14-gauge minimum galvanized steel. Bearings shall be a self-lubricating stainless steel sleeve turning in an extruded hole in the frame. Blade edge seals shall be silicone rubber designed to withstand 450 degrees F. Jamb seal shall be silicone impregnated fiberglass with stainless steel flexible metal compression type cover. Maximum blade width shall be 6 inches.

D. Each damper shall be classified by Underwriters Laboratories as a Leakage Rated Damper for use in smoke control systems under the latest version of UL 555S, and bear a UL label attesting to same. The damper leakage rating under UL 555S shall be leakage Class I (4 cubic feet per minute per square foot at 1-inch water gauge).

E. In addition to the leakage ratings already specified herein, the dampers and their actuators shall be qualified under UL 555S to an elevated temperature of 350 or 450 degrees F depending upon the actuator. Appropriately listed electric actuators shall be installed by the damper manufacturer at time of damper fabrication. Damper and actuator(s) shall be supplied as a single entity that meets applicable UL 555S qualifications for both dampers and actuators. Provide wiring and conduit materials required to interconnect the actuator(s).

F. Each damper shall be equipped with indication/position switches consisting of two-position indicator switches linked directly to the damper blade to provide the capability of remotely indicating damper blade position.

G. Heat-Actuated Temperature Release Device:
   1. Control close and lock damper during test, smoke detection, power failure, or fire conditions through actuator closure spring. At no time shall actuator disengage from damper blades.
   2. Allow damper to be automatically and remotely resettable after test, smoke detection, or power failure conditions. After exposure to high temperature or fire, inspect damper before reset to ensure proper operation.
   3. Controlled closure and locking of damper shall occur in 5 to 15 seconds to allow duct pressure to equalize. Instantaneous closure is not acceptable.
   4. Electric fuse link (EFL) with electric actuators.
   5. Release Temperatures: 165 degrees F.

H. Smoke damper and combination fire/smoke damper actuators shall be powered by a 120-volt AC signal from Division 26.

I. Electric damper actuator shall be driven open or closed by the rotating motion of a reversible, overload protected, non-stall synchronous motor. Crank arm shall be connected to the actuator directly with no intermediate linkage.

J. Actuator quantities per damper area shall be as recommended by the manufacturer. Provide additional actuators to meet the damper leakage requirement. Damper actuator shall stroke from fully open to fully closed or vice versa in less than 15 seconds from receipt of control signal.

K. Two-position dampers shall have spring return. Provide UL 555S-listed and -labeled actuators for all dampers.

2.4 ACTUATORS

A. Actuator motor shall be silent microprocessor-controlled providing electronic cut-off.

B. Motor shall be direct-coupled and incapable of burning out if stalled before full rotation is reached.

C. Housing, gears and toothed cold-weld clamp shall be steel.

D. Operation time: 5 to 15 seconds at 32 to 350 degrees F.

2.5 ACCESSORIES FOR DAMPERS

A. Interlock switch: Electrically and mechanically lock damper in closed position when duct temperatures exceed 165 degrees F and still allow appropriate authority to override interlock switch and operate damper as may be required for smoke management functions. Allow damper to remain operable while temperature is below 350 degrees F. Switch shall comply with NFPA 92A and be UL classified.

B. Interface with smoke detectors, building fire alarm systems or remote indicating and control stations.

C. High-Limit Temperature Sensor:
   1. Returns damper to fire protection mode when temperatures reach operational limit of damper and actuator assembly of 350 degrees F.
   2. Conform to NFPA 92A.
   3. Replaces controlled closure devices on standard dampers.

D. Blade Position Indicator Switches: Two position-indicator switches linked directly to damper blade to remotely indicate damper blade position.

E. Picture Frame Mounting Angles:
   1. One-piece, roll formed retaining angles, 1.5 by 1.5 inches. Requires factory sleeve.
   2. Factory-matched and -shipped on individual damper with factory-prepunched screw holes.

F. Steel Mullions: For dampers in oversized masonry wall openings.

G. Provide breakaway connection: Drivemate, Ductmate or equal.

2.6 BALANCING DAMPERS – SINGLE BLADE

A. Provide volume dampers as specified or shown on the Drawings for proper balancing and distribution of air, in the various branches of the ductwork for use in testing and balancing the system. Dampers shall be installed separate and independent from the damper specified to be set behind supply, return and exhaust air grilles. Provide single-blade dampers in ducts 24 inches in width or less, or 12 inches in height or less. Provide multiple-blade dampers for all other duct sizes. Coordinate with the air-balancing contractor and provide additional dampers required for proper air balance.

B. Provide single-blade and quadrant type volume dampers of minimum 20-gauge round or 22-gauge rectangular galvanized steel construction, pivoted to turn easily. Provide operating handles and Ventlok 641 or equal locking devices mounted on outside of the duct in an accessible location. Blade shall have 4 full-length brakes for increased stiffness and rigidity.

C. Damper component penetration shall be closed and sealed consistent with the specified duct sealing class. End bearings are required for 3-inch water gauge class.

2.7 BALANCING DAMPERS – MULTIPLE BLADES

A. Manual dampers shall have a minimum 16-gauge galvanized steel channel frame with mounting flanges and axles set in molded polycarbonate or oil-impregnated bronze bearings. Axles shall be minimum of 1/2-inch in diameter and shall be interlocked with blades to positively eliminated slippage.

B. Blades shall be minimum of 16-gauge galvanized steel. Manual dampers shall have a minimum of four breaks running the entire length of the damper to assure rigidity and tight close-off. Blades shall be on centers no greater than 9 inches and no blade shall exceed 48 inches in length. All blades shall be interconnected to act in unison for opposed blade operation.

C. When installed, damper frame shall be gasketed or caulked to eliminate leakage between duct or plenum and damper frame. Head and sill shall have stops. Damper shafts shall be marked to indicate blade position.

D. Dampers shall be provided with Ventline 560 or approved equal, locking quadrants of sufficient size and design to securely hold the damper sections and blade linkage hardware.

2.8 BACKDRAFT DAMPERS – COUNTERBALANCED TYPE

A. Provide counterbalanced backdraft dampers as specified and where indicated on the Drawings. Each damper shall be sized as indicated on the Drawings, and shall be suitable for installation in the mounting arrangement shown.

B. Backdraft damper shall be the heavy-duty pressure relief counter-balanced shutter type similar to Ruskin type CBD4, or approved equal.

C. Damper frame shall be minimum 16-gauge galvanized steel or 16-gauge aluminum. Damper frame shall be of channel construction for ductwork mounting or have a front flange when installed in a wall.

D. Damper blades shall be minimum 16-gauge galvanized steel or 16-gauge aluminum. Provide individual adjustable counterweights on each blade. The damper shall be capable of maintaining static pressures of 0.05 to 0.20 inches water gauge. Furnish tie bars constructed of minimum 16-gauge galvanized steel or 16-gauge aluminum on damper sections over 24 inches wide. After damper has been installed, counterweights shall be adjusted to balance the system static pressure as directed by the test and balancing contractor.

E. Damper blades shall have polyurethane foam, neoprene, or vinyl gaskets glued, riveted or rolled into blade edges.

F. Damper bearings shall be molded polycarbonate, bronze oilite, nylon, or cycoloy.

G. Furnish counter-balanced backdraft dampers with No. 1.5 mesh aluminum bird screen for rear mounting where counter-balanced backdraft dampers are mounted in outside walls.

2.9 REMOTE CABLE CONTROLS FOR DAMPERS

A. Manufacturer shall supply all necessary hardware for simple installation of remote cable controls system including the Bowden aluminum angle bracket and the Bowden control hub to accommodate the cable control system mounted on the damper.

B. Cable control system shall consist of Bowden cable 0.054-inch stainless steel control wire encapsulated in 3/16-inch flexible galvanized spiral wire sheath to insure positive operation for up to 50 feet (can be reduced if there are multiple turns or bends).

C. Control kit shall be designed for use with internally or externally controlled round or rectangular dampers and shall consist of 14 gauge steel rack and pinion gear drive to convert rotary motion to push-pull motion. Control shaft shall be D-style flattened with 265-degree rotation providing graduations for positive locking control and linear travel.

D. Control mounting options include ceiling framework, behind grilles, on or inside plenum slot diffusers and other various types of diffusers or through ceiling via 1-inch diameter inconspicuous access port. Twisting type cables are not acceptable.

E. Manual quadrant shall be commercial quality, locking type for 3/8-inch square shaft. Provide extended base for externally insulated ductwork.

PART 3 - EXECUTION

3.1 INSTALLATION

A. Install dampers square and free from twist or racking with blades running horizontally.

B. Do not compress or stretch damper frame into duct or opening.

C. Handle and lift damper using sleeve or frame. Do not lift damper using blades, accessories, actuator, or jackshaft. Handle dampers in accordance with manufacturer's instructions. Protect materials and finishes during handling and installation to prevent damage.

D. Provide conveniently located access doors, of ample size for resetting the dampers. Duct mounted grilles, registers or diffusers can be used for access as long as such access is readily available as determined by the Engineer, Owner or Authority Having Jurisdiction.

E. Install automatic control dampers of louver pattern including smoke dampers and fire/smoke dampers, as indicated on the Drawings or as specified in intake ducts and/or plenums, discharge ducts and plenums from fans, etc. These dampers shall be provided by the automatic control contractor.

05/03/13 PERMIT SET

F. Provide a 16-gauge elevated platform at least 1/8-inch higher than the insulation thickness for all balancing dampers installed in externally insulated ductwork. Damper shaft bearing shall be mounted on elevated platform.

G. Install remote operators for balancing dampers where damper is located above drywall, plaster or other inaccessible ceiling construction where access panels are not provided.

H. Fire damper operation shall be tested after the installation is complete. Static fire dampers shall be tested with the system fans not operating. Dynamic fire dampers shall be tested with system fans operating at their maximum static pressure ratings. A written certificate shall be issued by the Contractor to the Owner stating:
   1. Damper identification
   2. Damper location
   3. Date tested
   4. Names and signatures of witnesses and testing personnel

I. Provide a copy of certification to system balancing agent for inclusion in balancing report.

J. Size and quantity of dynamic fire damper shall be based on the UL listing of the damper manufacturer. Provide intermediate mullions and split duct connections as required.

K. Provide ribbon at each manual damper handle.

END OF SECTION

05/03/13 PERMIT SET

SECTION 233400

HVAC FANS

PART 1 - GENERAL

1.1 WORK INCLUDED

A. The work of this Section shall include, but is not limited to, the following:
   1. Centrifugal Fans:
      a. Cabinet
   2. Ceiling/Wall Fans (Panasonic)

1.2 RELATED DOCUMENTS

A. Section 23 05 01 – HVAC General Provisions
B. Section 23 05 13 – Common Motor Requirements for HVAC Equipment
C. Section 23 05 14 – Variable Frequency Drives for HVAC
D. Section 23 05 29 – Hangers and Supports for HVAC
E. Section 23 05 48 – Vibration and Seismic Controls for HVAC
F. Section 23 05 93 – Testing, Adjusting and Balancing for HVAC
G. Section 23 31 00 – HVAC Ducts and Casings
H. Section 23 33 13 – Dampers

1.3 REFERENCE STANDARDS

A. Construct all fans, except vaneaxial adjustable blade, to comply with the requirements of the latest editions of the Air Moving and Conditioning Association (AMCA) Standards and Bulletins. Certify these fans by AMCA for performance and sound ratings and provide the AMCA Performance and Construction Seal for Air and Sound.
B. AMCA – Air Movement and Control Association
   1. AMCA Standard 99, Edition 03 – Standards Handbook
   2. AMCA Standard 203, Edition 90 – Field Performance Measurement of Fan Systems
   3. AMCA Standard 204, Edition 05 – Balance Qualities and Vibration Levels for Fans
   4. AMCA Standard 210, Edition 07 – Laboratory Methods of Testing Fans for Certified Aerodynamic Performance ratings
   5. AMCA Standard 300, Edition 08 – Reverberant Room Method for Sound Testing of Fans
C. ABMA – American Bearings Manufacturers Association
   1. ABMA Standard 9 – Load Ratings and Fatigue Life for Ball Bearings
   2. ABMA Standard 11 – Load Ratings and Fatigue Life for Roller Bearings
D. NFPA – National Fire Protection Association
   1. NFPA Standard 90A, Edition 09 – Standard for the Installation of Air Conditioning and Ventilation Systems
   2. NFPA Standard 96, Edition 96, Edition 08 – Standard for Ventilation Control and Fire Protection of Commercial Cooking Operations
E. UL – Underwriters Laboratories Inc.
   1. UL Standard 705, Edition 04 – Powered Ventilators
   2. UL Standard 762, Edition 03 – Powered Roof Ventilators for Restaurant Exhaust Appliances
F. OSHA
   1. OSHA guideline 1910.212 – General Requirements for Machine Guarding
   2. OSHA guideline 1910.219 – General Requirements for Guarding Safe Use of Mechanical Power Transmission Apparatus

1.4 QUALITY ASSURANCE

A. For each fan, provide a multi-speed fan performance curve with multiple horsepowers on a single sheet. Single-speed fan curves are not acceptable.

05/03/13 PERMIT SET

B. Provide a full two-year parts and labor warrantee for all fan-mounted control air compressors.

C. The maximum allowable fan vibration shall be 0.15 inches per second peak velocity, filter-in as measured at the fan RPM.

1.5 SUBMITTALS

A. Submit construction details, gauges of fan wheels and housing components and certified dimensioned drawings.

B. Submit manufacturer's latest published data for weights, materials, accessories and installation details.

C. Submit full technical rating data based on tests in accordance with current AMCA standards and in an AMCA-approved laboratory. Fan curves shall indicate the relationship of airflow to static or total pressure for various fan speeds. Brake horsepower, recommended selection range, and limits of operation shall also be indicated on the curves. Indicate operating point on the fan curves at design air quantity and indicate the manufacturer's recommended drive loss factor for the specific application. Tabular fan performance data is not acceptable.

1. Include manufacturer's certified fan volume-pressure performance curves, from shut-off to free delivery. Consider drive efficiency in motor selection according to manufacturer's published recommendation or according to AMCA Publication 203, Appendix L.
2. Include certified sound power ratings based on tests performed in accordance with AMCA Standard 300. Correct all ratings and curves for altitude and temperature where applicable.

D. Motor construction and efficiencies.

E. Bearing life calculations based on maximum design speed for the class of each fan scheduled on the Drawing(s).

F. Fan shaft critical speed at scheduled performance.

G. For variable air volume application, include data that indicates the effect of capacity control devices, such as inlet vanes, on performance.

PART 2 - PRODUCTS

2.1 ACCEPTABLE MANUFACTURERS

A. Cabinet Fans: Penn, Panasonic

2.2 GENERAL – ALL FANS

A. Unless noted otherwise, provide discharge direction and drive arrangement to suit space conditions and conform as closely as possible to the layouts shown on the Drawings. Maintain clearance for service and access to all components.

B. Provide factory-fabricated, -assembled, -tested, and -finished fans consisting of housing, wheel, fan shaft, bearings, motor, drive assembly, and support structure. Fans shall be quiet operating and non-overloading over the entire range of operation.

C. Provide fan motors in accordance with Section 23 05 13 – Common Motor Requirements for HVAC Equipment. Size motor to drive its respective fan when the fan is operating at a speed 5 percent in excess of that required to meet the scheduled fan performance. Do not select motors within the service factor for this range.

D. Statically and dynamically balance fan wheels/impellers at the factory and certify balance. Design all vertically mounted fans to withstand the vertical thrust loads.

E. Provide precision self-aligning bearings designed to prevent leakage of oil or grease. Provide cups, oil chambers, Zerk or Alemite lubrication fittings in accessible locations for ease of lubrication. Provide heavy-duty split pillow block bearings with tapered, double-row spherical roller assemblies. Provide bearings with ABMA L_{10} service life in excess of 200,000 hours at maximum published fan operating conditions for the AMCA construction class required unless noted or specified otherwise. Bearings shall be fixed to the fan shaft using concentric mounting locking collars, to reduce vibration, increase service life and improve serviceability. Bearings that use set screws shall not be allowed.

05/03/13 PERMIT SET

F. Provide copper or steel lubrication leads, for lubrication of internal motors and bearings, extending to a capped termination point external to the fan casing or air-handling unit.

G. Extend wire leads on fans driven by direct motor drive from the motor junction box in air-tight rigid walled conduit, to a junction box mounted external to the fan casing.

H. On fans driven by belt drive, provide standard “V-groove” type oil-resistant, non-sparking, and non-static belts with cast iron or steel sheaves suitable for the service intended. Fan sheaves shall be non-adjustable type with removable machined bushings. Provide adjustable pitch type motor sheaves with double locking feature, to 10 percent above and below the rated fan speed. Dynamically balance sheaves with over three grooves. Provide sufficient quantity of belts and sheaves capable of carrying the entire load with one belt broken.

I. Provide pre-formed expanded metal and sheet metal belt guards at the fan and motor shafts, for all exposed sheaves and belts. Guard shall comply with OSHA and SMACNA requirements; 0.1046-inch thick, 3/4-inch diamond-mesh wire screen welded to steel angle frame or equivalent, prime coated. Secure to fan or fan supports without short-circuiting vibration isolation. Include provisions for adjustment of belt tension, lubrication, and use of tachometer with guard in place.

J. For motors in the airstream, provide TEFC type motors, unless other types are required, and as specified in Section 23 05 13 – Common Motor Requirements for HVAC Equipment.

K. Provide solid hot-rolled steel drive shafts, machined and polished to a close tolerance where in contact with bearings. Secure fan wheels/impellers to the drive shaft by a key and keyway assembly. Shafts shall be sized for first critical speed and at least 1.43 times maximum speed for AMCA fan class. Shaft length shall allow wheel adjustment of 4 inches.

L. Manufacture fans of materials and paint finishes suitable for the service intended.

M. Construct wheels/impellers exposed to normal atmospheres of cast aluminum or hot-dip galvanized steel and finished with two layers of factory-applied non-scaling paint.

N. Construct fans exposed to corrosive atmospheres using all-welded construction of corrosion-resistant materials suitable for intended use, and factory-finished with epoxy or other approved corrosion-resistant coatings.

O. Electrically ground all fans and drives to prevent accumulation of static charge. Indicate grounding method in fan submittals.

P. Provided threaded drain plugs at fan housing low points.

Q. Completely house fan assemblies exposed to weather in weather-proof enclosures including motor and drive.

R. Fan wheels/impellers and housings shall be relieved of residual stresses produced in the forming process.

S. Provide housings with integral inlet and discharge flanges, complete with bolt holes for flexible or hard duct connections. Shop-fabricate any companion flanges required for connections to sound attenuators. Companion flanges shall be rolled angles matched to both fan housing and sound attenuators.

T. Provide gasketed access doors to permit routine maintenance and inspection of motor and internal components. Inside surface of access door shall be flush with the inside surface of the fan housing.

2.3 CENTRIFUGAL FANS

A. Cabinet Type:
   1. Provide scroll type centrifugal fans, factory-installed within a cabinet enclosure, and comply with the requirements of Scroll Type Centrifugal Fans.
   2. Internally isolate fan and motor assemblies from the cabinet.
   3. Provide gasketed access doors and panels for inspection and routine maintenance of the internal components.
   4. Provide solid state variable speed controllers for small ceiling-mounted direct driven exhaust and transfer fans.

2.4 CONTROLS

A. Each fan shall be provided with local control capable of the following:
   1. 24 hour, 7 day per week scheduling
   2. Separate fan speed control

B. Local controller shall be wall mounted within the space.

C. Fan speed controller shall be unit mounted.

PART 3 - EXECUTION

3.1 INSTALLATION

A. Install fans in accordance with manufacturer's recommendations and as shown on the Drawings. Follow SMACNA- and AMCA-recommended procedures for fan installations, belt guards, duct connections, etc.

B. Provide flexible connections as described in Section 23 31 00 – HVAC Ducts and Casings with sufficient separation of ductwork, plenum panels, or air-handling unit casings from fan assembly to prevent metal-to-metal contact due to start-up torque or operating under specified isolator deflections.

C. Install fans and motors with proper support and vibration isolation as specified in Sections 23 05 48 – Vibration and Seismic Controls for HVAC, and 23 05 29 – Hangers and Supports for HVAC.

D. Provide sufficient clearances around fans for access and servicing of components. Install fans such that tachometer openings, access doors, motors, belts, lubrication lines, electrical connections, etc., are readily accessible and not obstructed by other installations or structures.

3.2 START UP

A. Verify thermal-overload protection is installed in motors, starters, and disconnect switches. Verify proper motor rotation direction, fan wheel free rotation and smooth bearing operation. Align and adjust belts, install belt guards and verify lubrication for bearings and other moving parts. Verify that manual and automatic volume control and fire/smoke dampers in connected ductwork systems are fully open.

B. Bump start fans to check that fan wheel/impeller has maintained static and dynamic balance and the rotation corresponds to the desired direction for airflow. Correct fans found to be rotating in a direction opposite to that desired. Unbalanced wheels shall be re-balanced by an AABC-certified test and balance contractor.

C. Tighten belt drives, taking into account the service factor and any other design of the drive. Exercise care not to over-tension belts.

D. Check all bolts and fasteners to ensure proper tightness. Do not over-tighten nuts and bolts.

E. Check bearings and motor for proper lubrication, taking care not to over-lubricate. Use only lubricants recommended by the manufacturer.

END OF SECTION

05/03/13 PERMIT SET

SECTION 233700

AIR OUTLETS AND INLETS

PART 1 - GENERAL

1.1 WORK INCLUDED

A. The work of this Section shall include, but is not limited to, the following:
   1. Air Outlets
   2. Air Inlets
   3. Accessories for Air Inlets and Air Outlets

1.2 RELATED DOCUMENTS

A. Section 23 05 01 - HVAC General Provisions
B. Section 23 05 93 - Testing, Adjusting and Balancing for HVAC
C. Section 23 07 00 - HVAC Insulation
D. Section 23 31 00 - HVAC Ducts and Casings
E. Division 26 - Electrical Specifications

Refer to Architectural Drawings and Specifications for floor, wall and ceiling construction.

1.3 REFERENCE STANDARDS

A. ANSI – American National Standards Institute
   1. ANSI Standard S1.13-2005 – Measurement of Sound Pressure Levels in Air
B. AHRI (ARI) – Air Conditioning and Refrigeration Institute Standards:
   1. AHRI Standard 885, Edition 98 – Procedure for Estimating Occupied Space Sound Levels in the Application of Air Terminals and Air Outlets
   2. AHRI Standard 880, Edition 98 – Air Terminals
C. ASHRAE – American Society of Heating, Refrigeration, and Air Conditioning Engineers
   1. ASHRAE Standard 70, Edition 02 – Method of Testing the Performance of Air Outlets and Air Inlets
   2. ASHRAE Standard 55, Edition 04 – Thermal Environmental Conditions for Human Occupancy
   3. ASHRAE Standard 113, Edition 05 – Method of Testing for Room Air Distribution
D. ASTM – American Society for Testing and Materials
   1. ASTM Standard B 117, Edition 07A – Standard Practice for Operating Salt Spray (Fog) Apparatus
   2. ASTM Standard D 870, Edition 02 – Standard Practice for Testing Water Resistance of Coatings Using Water Immersions
   3. ASTM Standard D 2794, Edition 93 – Standard Test Method for Resistance of Organic Coatings to the Effects of Rapid Deformation (Impact)
   4. ASTM Standard D 3776, Edition 07 – Standard Test Methods for Mass per Unit Area (weight) of Fabric
E. NFPA – National Fire Protection Association
   1. NFPA Standard 90A, Edition 09 – Standard for the Installation of Air Conditioning and Ventilation Systems

1.4 QUALITY ASSURANCE

A. Air outlets and inlets shall be tested in accordance with:
   1. AHRI Standard 880, Edition 98 – Air Terminals
   2. AHRI Standard 885, Edition 98 – Procedure for Estimating Occupied Space Sound Levels in the Application of Air Terminals and Air Outlets
   3. ASHRAE Standard 70, Edition 02 – Method of Testing the Performance of Air Outlets and Air Inlets

05/03/13 PERMIT SET

4. ASHRAE Standard 55, Edition 04 – Thermal Environmental Conditions for Human Occupancy
5. ASHRAE Standard 113, Edition 05 – Method of Testing for Room Air Distribution

B. All air inlets and outlets shall be factory-painted or -anodized. Paint or anodized finish shall pass a 100-hour ASTM-B 117 test. The finish shall pass a 250-hour ASTM-D 870 test and an ASTM-D 2794 impact test. Finish (pencil) hardness shall be minimum HB to H.

C. For all components provided with fiberglass acoustic lining, refer to Section 23 07 00: HVAC Insulation

1.5 SUBMITTALS

A. Submit manufacturer's performance data including air throw and drop, outlet velocities, total and velocity pressures and acoustic performance.

B. Submit manufacturer's specifications of construction including materials, installation instruction and adjustment data. Include "K" factors for balancing, if available.

C. Submit product accessories.

D. Submit samples, color and finish selections, schedule of sizes and model number for review by the Engineer prior to fabrication.

E. Schedule of air outlets and air inlets indicating drawing designation, room location, quantity, model number, size, and accessories furnished.

PART 2 - PRODUCTS

2.1 ACCEPTABLE MANUFACTURERS

A. Drawings and schedules indicate specific requirements of air inlets and air outlets and are based on the specific requirements of the systems indicated. Other manufacturers' products with equal quality, appearance, finish and performance characteristics may be considered. Refer to Section 23 05 01 – HVAC General Provisions for alternates or substitutions.

B. Air Inlets and Outlets: Titus, Krueger, Price, Air Factors, Air Concepts, Trox, Halton, Acutherm, DuctSox, Seiho.

C. Accessories: Dampers, equalizing grids, turning vanes, extractors, plenums, hardware and frames shall be provided by the same manufacturers as the air inlets and air outlets provided.

2.2 GENERAL

A. Air distribution outlets as shown on the Drawings shall accommodate the air volume and throw indicated to maintain a maximum terminal velocity of 50 feet per minute in the occupied area. The overall noise level produced by all of the supply air outlets and exhaust or return air inlets in various rooms shall not exceed specified limits.

B. Refer to Architectural Drawings and Specifications for reflected ceiling plans, elevations, wall and ceiling types and construction. Air outlets and inlets in fire-rated ceilings or walls shall be all-steel construction. Coordinate frame and border types to accommodate the wall or ceiling specified or shown on the Architectural Drawings.

C. All dampers provided shall be operable from the face of the Air Inlet or Air Outlet.

D. Model numbers noted herein are Titus unless otherwise noted.

2.3 OUTLET TYPES

A. Square Ceiling Diffuser, Architectural Plaque:
1. Provide architectural plaque supply diffusers, all-steel construction.
2. Diffuser shall consist of an outer frame assembly with a square or round inlet, and a removable face panel projecting 1/4 inch below the outside border of the diffuser backpan.
3. Diffuser backpan shall be minimum 22-gauge and shall capture a secondary panel of minimum 22-gauge. 24-inch by 24-inch sizes shall have no less than an 18-inch by 18-inch face panel size. 12-inch by 12-inch sizes shall have no less than a 12-inch by 12-inch face panel size.

4. Sizes indicated on the Drawings are neck sizes.
5. Air pattern as indicated on the Drawings.
6. Baked white enamel finish.
7. Type CD-A: 12-inch by 12-inch face size. Titus Model OMNI or approved equal.

B. Combination Plenum and Linear Slot:
1. Continuous linear slot diffusers shall fully integrate with the ceiling system and be constructed of 1/16-inch minimum extruded aluminum with continuous bar volume and deflection control damper for each slot. Provide continuous 26-gauge steel plenums with 1/2-inch acoustical lining sized as per manufacturer's recommendation above diffusers with supply air connections as indicated on the Drawings.
2. The slot diffusers shall have pattern controllers supported with spacer channels in 24-inch (nominal) increments the entire length of the slot. The pattern controllers shall allow infinite adjustments to the air stream at 24-inch intervals relative to the direction of the air stream as well as extending or reducing the air throw as may be required to satisfy job conditions and to provide draft-free air distribution. The slot diffuser shall maintain airflow across the ceiling and shall not "dump" even when airflow is reduced to 10 percent of design air quantities. Fixed of blade type pattern controllers are not acceptable.
3. The slot diffusers and air plenum shall be tested as a composite assembly for air distribution and noise level performance in both the horizontal and vertical throw applications. All tests shall be conducted in accordance with ASHRAE 70, Edition 02, in a laboratory certified by the AHRI.
4. Type LD-A: Titus Model FL-10-HT.

2.4 INLET TYPES

A. Louvered Register:
1. Provide all-aluminum register for sidewall or ceiling return or exhaust.
2. The single extruded aluminum set of horizontal fixed blades shall be set at 45-degree fixed deflection on 3/4-inch spacing. Blades shall be secured from behind by welding to fixed mullions. Provide a model AG-35 steel opposed blade damper.
3. The extruded aluminum border shall be 0.05 inches thick and 1.2 inches wide, interlocked and mechanically staked at the four corners to form a rigid frame. Corner joints shall be flush and screw holes shall be countersunk.
4. Baked white enamel finish.
5. Type EG-1: Titus Model 3FL.

B. Combination Plenum and Linear Slot:
1. Continuous linear slot diffusers shall fully integrate with the ceiling system and be constructed of 1/16-inch minimum extruded aluminum with continuous bar volume and deflection control damper for each slot. Provide continuous 26-gauge steel plenums with 1/2-inch acoustical lining sized as per manufacturer's recommendation above diffusers with supply air connections as indicated on the Drawings.
2. The slot diffusers shall have pattern controllers supported with spacer channels in 24-inch (nominal) increments the entire length of the slot. The pattern controllers shall allow infinite adjustments to the air stream at 24-inch intervals relative to the direction of the air stream as well as extending or reducing the air throw as may be required to satisfy job conditions and to provide draft-free air distribution. The slot diffuser shall maintain airflow across the ceiling and shall not "dump" even when airflow is reduced to 10 percent of design air quantities. Fixed of blade type pattern controllers are not acceptable.
3. The slot diffusers and air plenum shall be tested as a composite assembly for air distribution and noise level performance in both the horizontal and vertical throw applications. All tests shall be conducted in accordance with ASHRAE 70, Edition 02, in a laboratory certified by the AHRI.
4. Type LR-A: Titus Model FL-10-HT.

PART 3 - EXECUTION

3.1 GENERAL

A. Drawings indicate general arrangement of ducts, fittings, and accessories to achieve air volume, noise criteria, airflow pattern, throw, and pressure drop. Locations indicated on the Architectural drawings shall take precedence. For lay-in ceiling panels, locate in the center of the panel. Where architectural features or other items conflict with installation, notify Engineer for a determination of final location.

3.2 INSTALLATION

A. Install air outlet and air inlet with airtight connection to ducts and to allow service and maintenance of dampers, air extractors, and fire dampers.

B. After installation of diffusers, registers, and grilles, inspect exposed finish. Clean exposed surfaces to remove burrs, dirt, and smudges. Replace diffusers, registers, and grilles that have damaged finishes.

C. Install diffusers, registers, and grilles level and plumb, according to manufacturer's written instructions.

D. All visible interior surfaces of air inlets shall be factory-painted flat black.

END OF SECTION

05/03/13 PERMIT SET

SECTION 234000

HVAC AIR-CLEANING DEVICES

PART 1 - GENERAL

1.1 WORK INCLUDED

A. The work of this Section shall include, but is not limited to, the following:
   1. Panel filters
   2. Medium performance filters
   3. High performance filters
   4. Filter frames, clips, housings and holding assemblies

1.2 RELATED DOCUMENTS

A. Section 23 05 01 - HVAC General Provisions

B. Section 23 05 20 - Meters, Gauges and Thermometers for HVAC

C. Section 23 05 93 - Testing, Adjusting and Balancing for HVAC

1.3 REFERENCE STANDARDS

A. AHRI (ARI) - Air Conditioning and Refrigeration Institute Standards:
   1. AHRI Standard 850, Edition 04 - Standard for Performance Rating of Commercial and Industrial Air Filter Equipment.

B. ASHRAE - American Society of Heating, Refrigeration, and Air Conditioning Engineers
   1. ASHRAE Standard 52.2, Edition 07 - Method of Testing General Ventilation Air - Cleaning Devices for Removal Efficiency by Particle Size.

C. ASTM - American Society for Testing and Materials
   1. ASTM Standard D93, Edition 07 - Standard Test Methods for Flash Point by Pensky-Martens Closed Cup Tester.

D. UL - Underwriters Laboratories Inc.
   1. UL Standard 181, Edition 05 - Factory-Made Air Ducts and Air Connectors.
   2. UL Standard 586, Edition 86 - High-Efficiency, Particulate, Air Filter Units.
   3. UL Standard 900, Edition 04 - Air Filter Units.

1.4 QUALITY ASSURANCE

A. All filter efficiencies are stated in MERV performance as described in ASHRAE Standard 52.2-2007, except as noted.

B. Filter coatings shall comply with ASTM D93.

C. All filters shall comply with NFPA and UL standards for fuel contributed, flame spread and smoke development.

D. Electronic air cleaners shall be performance tested by an independent laboratory.

1.5 SUBMITTALS

A. Submit manufacturer's data on Minimum Efficiency Reporting Value (MERV) rating, sizes, pressure drops, maximum velocities and weights of complete units.

B. Submit materials of construction, joining and fastening details for filters, frames and holding assemblies.

C. Submit drawings showing arrangement of multiple filter units.

PART 2 - PRODUCTS

2.1 ACCEPTABLE MANUFACTURERS

A. Flat Filters: Flanders/CSC, CAMFIL/Farr, American Air Filter (AAF)

B. Bag Filters: CAMFIL/Farr, Viledon, American Air Filter, Flanders/CSC

05/03/13 PERMIT SET

2.2 TYPE "A" – PANEL FILTERS

A. Provide 2-inch thick pleated, lofted, non-woven, reinforced fabric, supported and bonded to a welded wire grid, and enclosed in cardboard frame for all panel filters with a MERV 7 rating.

B. In locations where "slide-in" side access type is required, install filters with adequate seals and blank-off provisions for preventing bypassing of air.

C. Do not exceed 400 feet per minute filter bank face velocity or as scheduled on the Drawings for the maximum scheduled airflow.

D. Frames shall be 16-gauge galvanized steel, complete with gaskets and spring type positive sealing fasteners.

E. Initial resistance to airflow at 500 FPM shall not exceed 0.3 inches water gauge; with a 0.9 inches water gauge recommended final resistance.

2.3 TYPE "B" – MEDIUM PERFORMANCE PANEL FILTERS

A. Provide factory-assembled filter media with a MERV 8 rating. Provide filter media 4 inches thick with an effective filter media of at least 7 square feet per square foot of filter face area.

B. Media retainer shall be of welded steel construction, designed to support multiple pleats of filter cartridge against the direction of airflow.

C. Filters shall consist of permanent 16-gauge galvanized steel frame and factory-assembled replaceable filter cartridges, complete with installation accessories.

D. Provide holding and sealer frames of 16-gauge galvanized steel, equipped with gaskets and four (4) spring type, positively sealing fasteners.

E. Select the frame to maximize the filter area in the casing. Limit different filter sizes to three total for the project.

F. Initial resistance to airflow at 500 FPM velocity shall not exceed 0.35 inches water gauge; with a 1.0-inch water gauge recommended final resistance.

2.4 TYPE "C" – HIGH PERFORMANCE FILTERS

A. Provide filter media of high-density microfine glass fibers laminated to a non-woven synthetic backing to form a lofted filter blanket. Provide media with a MERV rating of 13.

B. Provide permanent frame of a self-sealing type to facilitate installation and prevent air leakage between the frames. Provide a seal between the frames and the filter cartridge. The filter media shall be self-supporting against the force of the airflow throughout the operating range of 40 to 120 percent of nominal capacity.

C. Filters shall consist of permanent 16-gauge galvanized steel frame and factory assembled replaceable filter cartridges, complete with installation accessories.

D. Filters shall be rated UL Class 1.

E. Initial resistance to airflow at 500 FPM shall not exceed 0.40 inches water gauge for MERV 13; with a 1.0-inch water gauge recommended final resistance.

2.5 TYPE "C1" – HIGH PERFORMANCE RIGID POCKET FILTERS

A. Air filters shall be extended surface, self-supporting pocket type. Each air filter element shall be rigid in design and remain so regardless of airflow. Filter pockets shall be injection molded into a polyurethane header to ensure leakproof performance. Pockets shall be heat welded to ensure leakproof seams and periphery.

B. Filter media shall consist of organic synthetic microfibers progressively structured into a depth-loading design to optimize dust-holding capacity and filter life.

C. Filter media shall not contain binder material and shall be thermally bonded.

D. Filter media shall be hydrophobic (water repellant) without the need for water repellant binders. Filter media shall operate effectively in up to 100 percent relative humidity.

E. Filter element shall not require a pre-filter panel to extend service life.

F. Filter shall have a guaranteed filter life of two years without the need for pre-filter.

05/03/13 PERMIT SET

G. Filter media shall have a MERV rating of 13.

H. The rated filter face velocity shall be 500 feet per minute, with a maximum initial resistance of 0.4-inches water gauge for nominal size filter 24 inches by 24 inches by 26 inches.

I. The filter shall be classified by Underwriters Laboratories Class 2 when tested accordingly to UL Standard 900.

J. Filter shall fit into filter frames and housings without interfering with downstream components. All filters shall be the same pocket depths.

PART 3 - EXECUTION

3.1 INSTALLATION

A. Reinforce all filter banks and frames by welding the frames together or with galvanized angles or channels, in accordance with the filter manufacturer's recommendations. The maximum deflection at any point shall not exceed 0.25 inches with the filter bank operating at a final air pressure drop of 2.5 inches water gauge.

B. Fully gasket each filter bank to prevent air bypass around the filter sections or between the filter modules. Caulk and seal between the plenum and the holding frame.

C. Provide complete sets of Type 'A' filters for each piece of mechanical equipment to be used during the construction phase. The initial set shall be factory-installed and each subsequent construction set shall be installed at the direction of the Owner or Contractor, or when filters reach a maximum air pressure drop of 0.75 inches water gauge.

D. Provide two (2) complete sets of the filters specified for each fan coil, built-up filter bank and air-handling unit. Install one set immediately prior to the air balance and testing required by Section 23 05 93 – Testing, Adjusting and Balancing for HVAC. The other set shall be delivered to the Owner at the time of initial occupancy of the project.

E. Maintain necessary clearance for changing filters.

F. Install filter gauge static pressure tips upstream and downstream of filters. Mount gauge on outside of filter housing or filter plenum in accessible location. Install tubing and gauge valves between gauge and sensor tips. Adjust and level each gauge.

3.2 OPERATION

A. Maximum air velocity through the filter media shall not exceed 100 feet per minute for pleated type filters or a maximum face velocity of 400 feet per minute through the filter bank at the maximum scheduled fan airflow.

B. Install filter assemblies according to manufacturer's instructions and accepted trade practice. Focus particular attention on sealing against leakage between holding frame, housing, filter headers and filters.

C. Do not operate the equipment until specified filter media has been installed. Contractor shall be responsible for maintaining the cleanliness of air handling equipment and air distribution systems during construction through regular inspection and changing of filter media throughout the construction period.

END OF SECTION

05/03/13 PERMIT SET

SECTION 235100

BREECHINGS, CHIMNEYS AND STACKS

PART 1 - GENERAL

1.1 WORK INCLUDED

A. The work of this Section shall include, but is not limited to, the following:
   1. Self-supporting high temperature chimney, and breechings, including all fittings, structural supports, fastenings, bracing, sealant, shop and field painting, clean-outdoors, ventilated wall, floor or roof thimbles, flashing, rain hood, guy wires, seismic restraints and any related items.
   2. Self-supporting steel gas vent, including all fittings, structural supports, fastenings, bracing, sealant, shop and field painting, roof terminations, flashing, wall terminations, guy wires, seismic restraints and any related items.
   3. Calculations for vent sizing, seismic and thermal expansion design and associated details.

1.2 RELATED DOCUMENTS

A. Section 23 05 01 - HVAC General Provisions

B. Section 23 05 48 - Vibration Isolation and Seismic Restraints

C. Section 23 82 05 - Space Terminal Heating Units

1.3 REFERENCE STANDARDS

A. NFPA - National Fire Protection Association
   1. NFPA Standard 211, Edition 06 - Standard for Chimneys, Fireplaces, Vents, and Solid Fuel-Burning Appliances

1.4 QUALITY ASSURANCE

A. Units shall be UL Listed for use with heating equipment burning gaseous, solid or liquid fuels that do not exceed continuous operating flue gas temperature above 1000 degrees F and not exceeding 1400 degrees F under intermittent conditions as defined in NFPA 211.

B. Units shall be UL Listed for use with heating equipment burning gaseous fuels that do not exceed the requirements for Type B vent as defined in NFPA 211.

C. Units shall be UL Listed for use with heating equipment burning gaseous fuels that do not exceed continuous operating flue gas temperature above 550 degrees F as defined in NFPA 211.

D. The venting system shall develop a positive flow adequate to exhaust flue gases to the atmosphere without condensation within the vent or flue gas spillage. The design shall compensate for thermal expansion.

1.5 SUBMITTALS

A. Provide manufacturer chimney and vent draft calculations. Certify that the calculations are based on actual jobsite conditions and are coordinated with “released-for-construction” equipment submittal data, and that the complete stack and breeching systems stack draft range at equipment outlets are within the equipment manufacturer’s recommended range.

B. Provide backpressure, draft and stack diameter calculations for all possible infrared heater firing combinations.

C. Submit certification that chimney and vent will withstand maximum system pressure developed by the burner blowers, combustion and the venting system.

D. Submit certified dimensioned shop drawings, construction details, mounting details, hardware and accessories.

E. Submit seismic support and restraint calculations stamped and signed by a structural engineer licensed in California.

F. Submit expansion compensation calculations and compensator details.

05/03/13 PERMIT SET

PART 2 - PRODUCTS

2.1 ACCEPTABLE MANUFACTURERS

A. High Temperature Chimneys: Metalbestos Model IPS, Metal-Fab Inc. Model IPIC, or equal

B. Type B Vents: Metalbestos, Ameri-Vent, Ampco

2.2 HIGH-TEMPERATURE CHIMNEYS, POSITIVE-PRESSURE VENTS AND BOILER STACKS

A. Vent shall be double wall with an outer jacket of aluminized steel 0.025-inch thick for up to 24-inch diameter vents and 0.034-inch thick for larger sizes. The inner wall shall be Type 304 stainless steel of nominal 0.035-inch thickness with a minimum 2 inches of mineral wool insulation between the two metal walls for the boiler flue and 4 inches of mineral wool insulation for engine flues.

B. Vent shall be installed and supported in accordance with factory recommendations and factory-supplied components. Exposed metal protected by a minimum of one base coat and one finish coat of Rust-O-Crylic as manufactured by Rust-Oleum, or approved equal.

C. Inner pipe joints shall be sealed by use of flange draw bands with captive nuts and bolts, and RTV Silicone Sealant for flue gas temperatures up to 600 degrees F; above this temperature joints shall be sealed with high temperature joint cement as outlined in the installation instructions and supplied by the manufacturer.

D. The boiler flues shall be complete with bottom drain and conical vertical discharge.

E. The engine flue shall be complete with bottom drain and flapper type vertical discharge.

2.3 TYPE B GAS VENT

A. Vent shall be double wall with an outer jacket of galvanized steel 0.025-inch thick for up to 24-inch diameter vents and 0.030-inch for larger sizes. The inner wall shall be 26-gauge aluminized steel with a 1-inch air space between the two metal walls.

B. Vent shall be installed and supported in accordance with factory recommendations and factory-supplied components. Exposed metal protected by a minimum of one base coat and one finish coat of Rust-O-Crylic as manufactured by Rust-Oleum, or approved equal.

PART 3 - EXECUTION

3.1 INSTALLATION

A. Comply with local codes, UL Listing, NFPA 211 and factory installation requirements. Coordinate chimney and vent requirements with boiler or appliance listing.

B. Support breeching from structure. Breeching shall not impose load on appliance or chimney.

C. Install breeching and chimney with positive slope back to the appliance. Provide easily accessible condensate drainage connection, configured to prevent condensation from entering the boiler.

D. All branch fittings shall be 45-degree long radius sweep elbow connections in the direction of flue gas flow. All 90-degree elbows shall be long radius.

E. Transitions to increase breeching diameter shall be with an increaser fitting angle of 10 degrees maximum. Increase common breeching manifolds at each branch, and locate the connection within the 10-degree fitting as a “wye” connection.

F. Coordinate exact dimensions and other requirements of floor, roof, wall and partition penetrations with all other subcontractors.

G. Roof penetrations shall be suitable for the roof construction shown and shall follow manufacturer’s installation instructions and local codes.

H. Maintain clearance to combustible or non-combustible construction in compliance with the vent listing.

I. Whenever Excessive Pressure Relief Valves are required, install where indicated on the drawings and where human contact is avoided and away from flammable or combustible materials. Provide a shroud specifically designed for the system as necessary or as identified on the drawings.

END OF SECTION

05/03/13 PERMIT SET

SECTION 238129

VARIABLE REFRIGERANT VOLUME (VRV) SYSTEM

PART 1 - GENERAL

1.1 SUMMARY

A. This section includes variable capacity, heat pump and heat recovery air conditioning systems consisting of separate evaporator fan and compressor condenser components. Indoor fan coil units shall be designed for exposed or concealed mounting, and shall be referred to as a VRV (Variable Refrigerant Volume) system.

B. A system shall consist of multiple indoor direct expansion fan coil unit evaporators using PID control, and an outdoor condensing unit. The outdoor unit shall have capacity as scheduled, direct expansion (DX), air-cooled heat pump or heat recovery air-conditioning system, variable speed driven compressor multi zone split system, using R410A refrigerant. The outdoor unit may be connected to indoor fan coil evaporator capacity up to 130 percent of the outdoor condensing unit capacity only when the system is a heat-recovery unit. All indoor units shall each be capable of operating separately with individual temperature control.

C. The outdoor unit shall be interconnected to different types of indoor unit models and shall range in capacity from 1 to 4 tons refrigeration (TR). The indoor units shall be connected to the outdoor condensing unit utilizing the manufacturer's piping joints, fitting, manifolds, and headers.

1.2 RELATED DOCUMENTS

A. Section 23 05 01 - HVAC General Provisions
B. Section 23 05 13 - Common Motor Requirements Equipment
C. Section 23 05 29 - Hangers and Supports for HVAC
D. Section 23 05 48 - Vibration and Seismic Controls
E. Section 23 05 93 - Testing, Adjusting and Balancing for HVAC
F. Section 23 07 00 - HVAC Insulation
G. Section 23 09 23 - Direct Digital Control System for HVAC
H. Section 23 23 00 - Refrigerant Piping
I. Section 23 34 00 - HVAC Fans
J. Section 23 40 00 - HVAC Air Cleaning Devices

1.3 SUBMITTALS

A. Product Data: Include rated capacities, furnished specialties, and accessories for each type of product indicated. Include performance data in terms of capacities, outlet velocities, static pressures, sound power characteristics, motor requirements, and electrical characteristics.
B. Shop Drawings: Diagrams for power, signal, and control wiring.
C. Samples: Wall-mounted thermostats and room sensors.
D. Field quality-control test reports.
E. Operation and Maintenance Data: To include in operation and maintenance manuals.
F. Warranty: Special warranty specified in this Section.

1.4 QUALITY ASSURANCE

A. Drawings indicate size, profiles, and dimensional requirements of VRV systems, and are based on the specific system indicated.
B. Electrical components, devices, and accessories: Listed and labeled as defined in NFPA 70, Article 100, by a testing agency acceptable to authorities having jurisdiction.
C. The system shall be listed by Electrical Laboratories (ETL) and bear the ETL label.
D. All wiring shall be in accordance with the National Electric Code (NEC).

05/03/13 PERMIT SET

E. The system shall operate continuously in outdoor ambient temperatures up to 104 degrees F.

F. The outdoor condensing unit shall be factory charged with R410A.

1.5 WARRANTY

A. Warranty Period:
   1. One year parts and labor.
   2. Compressors: Six years.

PART 2 - PRODUCTS

2.1 MANUFACTURERS

A. Manufacturers: Subject to compliance with requirements, provide products by the following:
   1. Daikin
   2. Mitsubishi
   3. LG
   4. Or approved equal.

2.2 OUTDOOR COMPRESSOR-CONDENSER UNIT

A. General: The outdoor condensing unit shall be designed specifically for use with VRV series components.
   1. The outdoor condensing unit shall be factory assembled and pre-wired with all necessary electronic and refrigerant controls. The refrigeration circuit of the condensing unit shall consist of a scroll compressor, motors, fans, condenser coil, electronic expansion valve, solenoid valves, 4-way valve, distribution headers, capillaries, filters, shut off valves, oil separators, service ports, liquid receivers and accumulators.
   2. Both liquid and suction lines shall be individually insulated between the outdoor and indoor units.
   3. The sound pressure dB(A) at rated conditions shall not exceed 63 dBA at 3.3 feet from the front of the unit. The outdoor unit shall be capable of operating at further reduced noise during off-peak time.
   4. The system shall automatically restart operation after a power failure and not cause any settings to be lost.
   5. The outdoor unit shall be modular in design and allow for side-by-side installation with minimum spacing.
   6. The following safety devices shall be included on the condensing unit; high pressure switch, control circuit fuses, crankcase heaters, fusible plug, high pressure switch, overload relay, inverter overload protector, thermal protection for compressor and fan motors, overcurrent protection for the inverter and anti-recycling timers. To ensure the liquid refrigerant does not flash when supplying to the various fan coil units, the circuit shall be provided with a sub-cooling feature. Oil recovery cycle shall be automatic, occurring 1 hour after start of operation and then every 6 hours of operation.
   7. The outdoor unit shall be capable of heating operation at 32 degrees F dry bulb ambient temperature without additional low ambient controls.

B. Unit Cabinet: The outdoor unit shall be completely weather proof and corrosion resistant. The unit shall be constructed from rust-proofed mild steel panels coated with a baked enamel finish.

C. Fan:
   1. The condensing unit shall consist of one propeller type, direct-drive fan and 750 watt motor that have multiple speed operation via a direct current inverter.
   2. The condensing unit fan motor shall have multiple speed operation of the direct current inverter type, shall operate at high external static pressure and shall be factory set as standard at 3 millimeters water gauge with available by field setting switch to a maximum 6.5 millimeters water gauge.
   3. The fan shall be a vertical discharge configuration.
   4. The fan motor shall have inherent protection and permanently lubricated bearings and be mounted.
   5. The fan motor shall be provided with a fan guard to prevent contact with moving parts.

D. Condenser Coil:
   1. The condenser coil shall be manufactured from copper tubes expanded into aluminum fins to form a mechanical bond.
   2. The coil shall be of a waffle louver fin and high heat exchanger, rifled bore tube design to ensure highly efficient performance.
   3. The coils shall be complete with corrosion treatment of an acrylic resin type. The thickness of the coating must be between 2.0 to 3.0 micrometers.

E. Compressor:
   1. The scroll compressor shall be variable speed (PAM inverter) controlled, capable of changing the speed to follow the variations in total cooling load as determined by the suction gas pressure, as measured in the condensing unit.
   2. The inverter driven compressor in each condensing unit shall be of the reluctance direct current, hermetically sealed scroll type with a maximum speed of 6,480 rpm.
   3. Neodymium magnets shall be adopted in the rotor construction to yield high torque and efficiency in the compressor. At complete stop of the compressor, the neodymium magnets shall position the rotor into the optimum position for a low torque start.
   4. The capacity control range shall be 14 to 100 percent, with 29 individual capacity steps. Each non-inverter compressor shall also be of the hermetically sealed scroll type.
   5. Each compressor shall be equipped with a crankcase heater, high pressure safety switch, and internal thermal overload protector.
   6. Oil separators shall be standard with the equipment together with an oil balancing circuit.
   7. The compressor shall be mounted to avoid the transmission of vibration.

F. Electrical:
   1. The control voltage between the indoor fan coils and outdoor condensing units shall be 24 volts direct current non-shielded 2 conductor cable.
   2. The control wiring shall be a two-wire multiplex transmission system, making it possible to connect multiple indoor units to one outdoor unit with one 2-cable wire.

G. Control: Controls shall be provided by the VRV system manufacturer to perform functions necessary to operate the system. Provide integration with BMS to allow full control of VRV system through BMS.

2.3 INDOOR DIRECT EXPANSION FAN COIL UNITS – CEILING CONCEALED DUCTED TYPE

A. Indoor built-in ceiling concealed fan coil unit shall operate with refrigerant R410A, and shall be equipped with an electronic expansion valve, for installation above the ceiling in a horizontal discharge air and horizontal return air configuration. PID control shall be used to maintain room temperature within 2 degrees F, with a programmed drying cycle that dehumidifies while inhibiting changes in room temperature when used with the VRV manufacturer's remote control devices.

B. The indoor units sound pressure shall not exceed 45 dB(A) at low speed measured 1.5 meters below the ducted unit.

C. Indoor Unit:
   1. The indoor unit shall be completely factory assembled and tested. Provide factory wiring, piping, electronic proportional expansion valve, control circuit board, fan motor thermal protector, flare connections, self-diagnostics, auto-restart function, 3-minute fused time delay, and test run switch. The unit shall have an adjustable external static pressure switch.
   2. Indoor unit and refrigerant pipes shall be charged with dehydrated air prior to shipment from the factory.
   3. Both refrigerant lines shall be insulated.
   4. The indoor units shall be equipped with a return air thermistor.
   5. The indoor unit shall be separately powered with 208 volt / 1 phase / 60 hertz.

D. Unit Cabinet:
   1. The cabinet shall be located into the ceiling and ducted to the supply and return openings.
   2. The cabinet shall be constructed with sound absorbing foamed polystyrene and polyethylene insulation.

05/03/13 PERMIT SET

E. Fan:
   1. The fan shall be direct-drive type, statically and dynamically balanced, with high and low fan speeds available.
   2. The fan motor shall operate on 208 volts, 1 phase, 60 hertz.
   3. The air flow rate shall be available in high and low settings.
   4. The fan motor shall be thermally protected.

F. Coil:
   1. Coils shall be of the direct expansion type constructed from copper tubes expanded into aluminum fins to form a mechanical bond.
   2. The coil shall be of a waffle louver fin and high heat exchange, rifled bore tube design to ensure highly efficient performance.
   3. The coil shall be a 3 row cross fin copper evaporator coil with 5.1 fins per centimeter design completely factory tested.
   4. The refrigerant connections shall be flare connections and the condensate shall be 1-1/4-inch outside diameter PVC.
   5. A thermistor shall be located on the liquid and gas line.

G. Electrical:
   1. A separate power supply shall be required of 208 volts, 1 phase, 60 hertz. The acceptable voltage range shall be 187 to 253 volts.
   2. Control wiring between the indoor and outdoor unit shall be a maximum of 3,000 feet.
   3. Control wiring between the indoor and remote controller shall be a maximum distance of 1,500 feet.

H. Control: Controls shall be provided by the VRV system manufacturer to perform functions necessary to operate the system. Provide integration with BMS to allow full control of VRV system through BMS.

I. Accessories:
   1. Remote room sensor:
      a. The wall-mounted, hard wired remote sensor shall be provided for ceiling-concealed type fan coils.
      b. The sensor shall be configured to utilize the thermistors and enclosures as shown on the Drawings.
      c. The VRV system supplier shall be responsible for providing the thermistors and ensuring satisfactory operation with the remote sensor.
   2. MERV 13 air filter and airflow monitoring station where noted on drawings.
   3. Condensate pump as scheduled.

2.4 CONTROLS

A. Control components exposed in the room shall be a neutral color plastic material. Each control shall have a Liquid Crystal Display (LCD) capable of turning the fan coil unit on/off, fan speed control, and adjustable room temperature setpoint.

B. From each circuit board to the controls, the electrical voltage shall be 24 volts direct current.

C. Wiring: Control wiring shall be installed in a daisy chain configuration from indoor unit to indoor unit then to the branch selector box and outdoor unit. Control wiring shall run from the indoor unit terminal block to the specific controller for that unit.

D. Wiring Size: The wire shall be a non-shielded, 2-core sheathed vinyl cord or cable, size AWG18-2.

E. Individual Zone Controller – Wired Remote Controller: The wired remote controller shall control one group (maximum of 16 fan coil units) and shall function as follows:
   1. The controller shall accommodate a wiring length of up to 1,500 feet.
   2. The controller shall have a self-diagnosis function that continuously monitors the system for malfunctions (total of 80 components).
   3. The controller shall be able to immediately display fault location and condition.
   4. An LCD digital display shall allow the temperature to be set in 1 degree C units.
   5. The controller shall be equipped with a thermostat sensor in the remote controller.

05/03/13 PERMIT SET

PART 3 - EXECUTION

3.1 INSTALLATION, GENERAL

A. Install air-cooled condensers level and plumb, maintaining manufacturer's recommended clearances.

B. Curb Support: Install and secure roof-mounted condensing units on curbs and coordinate roof penetrations and flashing with roof construction. Secure condensing units to curb support with seismically designed anchor bolts.

C. Install suspended components level and plumb, maintaining manufacturer's recommended clearances. Coordinate wall penetrations and flashing with wall construction.

D. Support suspended fan coil units from structure using threaded steel rods and spring hanger, with vertical-limit stop having deflection specified Section 23 05 48 - Vibration and Seismic Controls for HVAC.

E. Connections:
1. Piping installation requirements are specified in other Division 23 Sections. Drawings indicate general arrangement of piping, fittings, and specialties.
2. Install piping adjacent to machine to allow service and maintenance.
3. Drainage Connections: Comply with applicable requirements in Section 23 21 13 - Hydronic Piping. Provide adequate connections for condensate drain.
4. Refrigerant Piping: Comply with applicable requirements in Section 23 21 13 - Hydronic Piping. Provide service valves and piping accessories.
5. Electrical System Connections: Comply with applicable requirements in Division 26 Sections for power wiring, switches, and motor controls. Electrically ground all equipment as specified in Division 26.
6. Tighten electrical connectors and terminals according to manufacturer's published torque-tightening values. If manufacturer's torque values are not indicated, use those specified in UL 486A and UL 486B.

F. Startup Service:
1. Engage a factory-authorized service representative to inspect, test, and adjust field-assembled components and equipment installation, including connections, and to assist in field-testing.
   a. Inspect for and remove shipping bolts, blocks, and tie-down straps.
   b. Operational Test: After electrical circuitry has been energized, start AC systems to confirm proper motor rotation and AC system operation.
   c. Leak Test: After installation, charge systems with refrigerant and oil and test for leaks. Repair leaks and replace lost refrigerant and oil.
2. Test and adjust controls and safeties. Replace damaged and malfunctioning controls and equipment.
3. Perform start-up service. Verify that AC systems are installed and connected according to manufacturer's written instructions and the Contract Documents.
4. Verify that electrical wiring installation complies with manufacturer's submittal and installation requirements in Division 26 Sections.
5. Complete installation and start-up checks according to manufacturer's written instructions.
6. After start-up service and performance test, clean filters.
7. Adjust initial temperature setpoints.
8. Set field-adjustable switches and circuit breaker trip ranges as indicated.
9. Remove and replace malfunctioning AC system with new components and retest.

G. After completing system installation, including outlet fittings and devices, inspect exposed finish. Clean to remove burrs and construction debris and repair damaged finishes.

H. Commissioning:
1. Verify AC systems are installed as specified and shown on the Drawings.
2. Complete installation and start-up checks according to manufacturer's written instructions and do the following:
   a. Inspect for physical damage to AC system condenser and fan coil unit casings.
   b. Verify that access doors move freely and are weather-tight.

05/03/13 PERMIT SET

c. Clean AC systems and inspect for construction debris.
d. Check that all bolts and screws are tight.
e. Adjust vibration isolation, seismic restraints and flexible connections.
f. Verify that controls are connected and operational.

3. Verify fan wheel is rotating in the correct direction and is not vibrating or binding.
4. Start AC systems according to manufacturer's written instructions. Complete manufacturer's starting checklist.
5. Measure and record airflow over evaporator coils.
6. Check operation of low ambient control device.
7. Verify that vibration isolation and flexible connections properly dampen vibration transmission to structure.

I. Start-up Services: Engage a factory-authorized service representative to train Owner's maintenance personnel as specified below:

1. Train Owner's maintenance personnel on procedures and schedules related to start-up and shut-down, troubleshooting, servicing, and preventive maintenance.
2. Review data in the maintenance manuals.
3. Schedule training with Owner, through Engineer, with at least 14 days' advance notice.

END OF SECTION

SECTION 238205

SPACE TERMINAL HEATING UNITS

PART 1 - GENERAL

1.1 WORK INCLUDED

A. The work of this Section shall include, but is not limited to, the following:
   1. Gas-fired infrared tube heaters

1.2 RELATED DOCUMENTS

A. Section 23 05 01 - HVAC General Provisions
B. Section 23 05 13 - Common Motor Requirements for HVAC Equipment
C. Section 23 05 48 - Vibration and Seismic Controls for HVAC

1.3 REFERENCE STANDARDS

A. AMCA – Air Movement and Control Association
B. ASHRAE – American Society of Heating, Refrigerating, and Air-Conditioning Engineers
C. ASTM – American Society for Testing and Materials
   1. ASTM Standard B 743 – 2006: Standard Specification for Seamless Copper Tube in Coils
D. NEMA – National Electrical Manufacturers Association
E. NFPA – National Fire Protection Association
   1. NFPA Standard 70, Edition 08 – National Electrical Code
F. OSHA – Occupational Safety Hazard Association
G. UL – Underwriters Laboratories Inc.
   1. UL Standard 486A-486B – 2003, Revised 2006: Wire Connectors

1.4 QUALITY ASSURANCE

A. Heater will be tested in accordance with ANSI Z83.20-2008 / CSA 2.34-2008 Standard, and certified by CSA International.

1.5 SUBMITTALS

A. Submit manufacturer's latest information on construction details, capacity data, color samples for architectural review, and installation data.

PART 2 - PRODUCTS

2.1 ACCEPTABLE MANUFACTURERS

A. Gas-Fired Infrared Tube Heaters: Schwank, Space-Ray, SunStar or equal

2.2 GAS-FIRED INFRARED TUBE HEATERS

A. Provide heaters of types, sizes and capacities as shown on the Drawings.
B. General:
   1. Site assembled, modular infrared radiant heating unit for overhead mounted space or area heating application. Supplied with the heater as required for field installation and start-up will be a burner with all necessary factory installed wiring, piping, and controls and a radiant tube/reflector system, complete with hangers and end plates, corresponding in length to the burner input.
   2. The radiant tube type infrared heating unit(s) will be manufactured by Schwank.
   3. Heater size(s) and capacity(s) are as noted on drawing and/or schedule
C. Emitting Tube System:
   1. General:
      a. All tubes will be 4 inch diameter with an emitting surface area of 152 in² per linear foot

05/03/13 PERMIT SET

b. For inputs up to and including 130,000 Btuh the 10 foot combustion tube adjoining to the burner will be constructed of 16 gauge aluminized steel
c. For inputs equal to and greater than 160,000 Btuh the 10 foot combustion tube adjoining to the burner will be constructed of 16 gauge 439 grade stainless steel with a following 10 foot length of 16 gauge aluminized steel
d. The balance of the heat exchanger tube system (lengths as approved for burner input) will be 10 ft lengths of 16 gauge hot rolled steel
e. Hot rolled heat exchanger tubes will be coated with a high temperature emissive coating
f. The system tubes will have a swage of approximately 4 inches in length to accommodate the connection of subsequent tubes and vent pipe at the heater termination
g. Each tube connection in the system will be secured in place with a 4 inch coupler

D. Reflector Shield System:
1. General:
a. Reflector shields will be constructed of minimum 21 gauge high grade steel with a heat and corrosion resistant hot-bonded aluminum-silicon alloy coating.
b. A high temperature Alkaline Earth Silicate refractory insulation of ½ inch thickness will be assembled between an inner and outer reflector shield and serve to reduce heat emission from the outer surface of the reflector shield assembly and thereby directing more radiant heat to the work space
c. The insulated reflector system will enclose the emitting tube system on the top and two sides and extend to the bottom surface of the tube system to entrap convection heat around the tube system, thereby increasing overall tube temperature and infrared heat emission
d. The reflector system will have aluminized-steel sheet metal end caps at each end of the system to minimize the escape of entrapped convection heat

E. Tube/Reflector Suspension System:
1. General:
a. The tube/reflector system will have two steel wire hangers with steel channel cross beams per each tube/reflector section that will serve to support the system, allow free expansion of the tube and reflector system, and allow the free passage of entrapped convection heat along the length of the system to promote more uniform heat output along the length
b. The wire hangers will enable suspension of the system so that the reflector shields can be oriented about the short axis of the system at a fixed angle between 0° to 35°
c. The entire tube/reflector system will be suspended from the structure per manufacturer's installation instructions
d. The suspension hardware will be capable of suspending a weight of 90 lb. at the first hanger at the burner end, and 60 lb. at each subsequent hanger in the system.

F. Burner:
1. General:
a. The burner assembly will have a blower to create a positive pressure system
b. The blower will provide combustion air flow directly to the burner so that electronic burner components are isolated from the air flow
c. The blower will be fitted with a 4 inch (100 mm) diameter collar in case site conditions warrant connection of outside combustion air
d. The burner assembly will operate on natural gas
e. The burner assembly will be housed in a pre-painted sheet metal protective cabinet
f. The burner cabinet will be of a 'clam-shell' design, enabling the lower portion to open downward on a hinge to provide service access to all burner components
g. To facilitate servicing, the burner will be operable with the burner cabinet in the 'open' position
2. Heater will ensure controlled combustion with model configurations of input and tube length providing a minimum combustion efficiency of 81%. Combustion will produce a limited volume of noxious component CO (< 20 ppm).

G. Controls and Safeties:
   1. General:
      a. Electrical Rating: The burner will operate on a 115Vac, 60Hz electrical supply with a current rating of no less than 1.5A at 115Vac
      b. Heater gas and ignition controls will be readily accessible for servicing.
      c. The burner will have solid state direct spark ignition and flame sensor control that is dedicated to secure the operation of the burner
   2. Ignition and Flame Control:
      a. To complete the direct spark ignition system the burner will incorporate a gas control and 25Vac transformer
      b. Burner will be complete with a low voltage (25Vac), solid state direct spark ignition and ionization flame sensing control module that will provide a 30 second pre-ignition purge of the system by the blower. Electrical Rating: 25Vac, 60Hz with current rating of 0.2A at 25Vac
      c. Burner will be complete with an igniter/sensor to provide spark ignition and flame sensing.
      d. The ionization module will sense the presence of main burner flame and discontinue spark ignition. If the burner fails to ignite within the trial-for-ignition period, the flame control will go into safety lockout. Reset of the control is manually done from the thermostat.
      e. The ionization module will check for a false flame condition (short to ground) and lock out if a false flame condition is present.
      f. The ignition module will have a 21 second trial-for-ignition period
      g. The ignition module will open the main gas valve and generate 30,000 volts at the spark igniter for direct ignition of the burner.
      h. On a loss of burner flame the timed trial-for-ignition is repeated. Safety lockout occurs if flame is not reestablished within the 21 second trial-for-ignition period. Reset of the control is manually done from the thermostat or electrical supply.
   3. Gas Control:
      a. Heater will be complete with a direct ignition gas control with a manual valve, two automatic operators, and a pressure regulator
      b. Electrical Rating: 24Vac, 60Hz; draw 0.5A with both operators energized
      c. The gas control will have an inlet pressure tap and an outlet pressure tap to facilitate measurement of gas supply and manifold pressures during servicing.
      d. Heater will be complete with a ½" pipe nipple for connection to the gas supply.
   4. Heater Temperature Control:
      a. Burner will be complete with a 24/120Vac relay switch; inclusion or removal of a jumper wire will enable control of the heater using the thermostat of 24Vac
      b. Where multiple heaters are to be controlled in a zone by a single 24Vac thermostat, a Transformer/Relay shall be supplied by the manufacturer.
      c. Space Heating: Each heater zone will be controlled by a 24 Vac infrared set-back thermostat, or other 24 Vac thermostat as supplied by the manufacturer
   5. Safety Controls:
      a. Burner will be complete with a pressure switch in the ignition system electrical circuit that will close upon proving a sufficient supply of combustion air from the blower
      b. Burner will further be complete with a separate pressure switch in the ignition system electrical circuit that will open upon pressure resulting from a blocked flue condition in the tube system

H. Exhaust Requirements:
   1. When vented directly to the outside, the gas fired infrared heating system installation will comply with the manufacturer's installation instructions, the current National Natural Gas and Propane Installation Code and all applicable local codes using:
      a. A 4 inch (100 mm) single wall vent pipe of a gauge prescribed by national and/or local codes
      b. A section of double walled vent will be used for that portion of the vent that passes though the wall or roof

c. The vent will be terminated with a cap as recommended by the manufacturer

PART 3 - EXECUTION

3.1 INSTALLATION

A. Install infrared tube heaters as detailed on the architectural drawings and follow manufacturer's instructions.

END OF SECTION

05/03/13 PERMIT SET

SECTION 260501

ELECTRICAL GENERAL PROVISIONS

PART 1 - GENERAL

1.1 DESCRIPTION

A. The General and Supplementary Conditions are a part of the requirements for the work under this Division of the Specifications.

1.2 WORK INCLUDED

A. Provide labor and materials required to install, test and place into operation the electrical systems as called for in the Contract Documents, and in accordance with applicable codes and regulations.

B. Provide labor, materials, and accessories required to provide complete, operating electrical systems. Labor, materials or accessories not specifically called for in the Contract Documents, but required to provide complete, operating electrical systems shall be provided without additional cost to the Owner.

1.3 QUALITY ASSURANCE

A. Comply with the current applicable codes, ordinances, and regulations of the Authority or Authorities Having Jurisdiction, the rules, regulations and requirements of the utility companies serving the project, and the Owner's insurance underwriter.

B. Drawings, specifications, codes and standards are minimum requirements. Where requirements differ, the most stringent apply.

C. Should any change in drawings or specifications be required to comply with governing regulations, notify the Engineer prior to submitting bid.

D. All electrical equipment, materials, devices and installations shall meet or exceed minimum requirements of ADA, ANSI, ASTM, IEEE, IES, NEC, NEMA, NETA, NFPA, OSHA, SMACNA, UL, and the State Fire Marshal.

E. Execute work in strict accordance with the best practices of the trades in a thorough, substantial, workperson-like manner by competent workpeople. Provide a competent, experienced, full-time Superintendent who is authorized to make decisions on behalf of the Contractor.

F. Equipment shall be certified for use in the State of California and shall meet the California energy code.

1.4 ABBREVIATIONS AND DEFINITIONS

A. Abbreviations:

1. ADA Americans with Disabilities Act
2. ANSI American National Standards Institute
3. ASA Acoustical Society of America
4. ASTM American Society for Testing and Materials
5. BIL Basic Impulse Level
6. CBM Certified Ballast Manufacturers
7. ECC Engineer's Control Center
8. EIA Electronic Industries Alliance
9. ETL Electrical Testing Laboratories, Inc.
10. FCC Fire Control Center
11. FM Factory Mutual
12. IEEE Institute of Electrical and Electronic Engineers
13. IES Illuminating Engineering Society
14. IPCEA International Power Cable Engineers Association
15. LED Light Emitting Diode
16. NEC National Electric Code
17. NEMA National Electrical Manufacturers Association
18. NETA National Electrical Testing Association

05/03/13 PERMIT SET

19. NFPA National Fire Protection Association
20. OEM Original Equipment Manufacturer
21. OSHA Occupational Safety and Health Administration
22. SCC Security Control Center
23. SMACNA Sheet Metal and Air Conditioning Contractors National Association
24. TIA Telecommunications Industry Association
25. UL Underwriters Laboratories Inc.

B. Definitions:
1. Where it is stated in these specifications to submit to Engineer for review, refer to Architectural General and Supplementary Conditions for proper procedures.
2. FURNISH means to supply all materials, labor, equipment, testing apparatus, controls, tests, accessories and all other items customarily required for the proper and complete application.
3. INSTALL means to join, unite, fasten, link, attach, set up or otherwise connect together before testing and turning over to Owner, complete and ready for regular operation.
4. PROVIDE means to FURNISH and INSTALL.
5. AS DIRECTED means as directed by the Engineer, or the Engineer's Representative.
6. CONCEALED means embedded in masonry or other construction, installed behind wall furring or within drywall partitions, or installed within hung ceilings.
7. SUBMIT means submit to Engineer for review.

1.5 GUARANTEE

A. Submit a single guarantee stating that the work is in accordance with the Contract Documents. Guarantee work against faulty and improper material and workmanship for a period of one year from the date of final acceptance by the Owner, except that where guarantees or warranties for longer terms are provided or specified herein, the longer term shall apply. Correct any deficiencies, which occur during the guarantee period, within 24 hours of notification, without additional cost to the Owner, to the satisfaction of the Owner. Obtain similar guarantees from subcontractors, manufacturers, suppliers and subtrade specialists.

1.6 USE OF THE ARCHITECT'S AND ENGINEER'S DRAWINGS

A. The Contractor shall obtain, at the Contractor's expense, from the Architect or Engineer a set of AutoCad or compatible format architectural and engineering drawings on electronic media where desired by the Contractor and/or required by the Specifications for use in preparing the shop drawings, coordination drawings, and record drawings. The Contractor shall provide to the Architect and Engineer a written release of liability acceptable to the Architect and Engineer prior to receiving the electronic media.

PART 2 - PRODUCTS

2.1 EQUIPMENT AND MATERIALS

A. Provide products and materials that are new, clean, free of defects, and free of damage and corrosion.

B. Products and materials shall not contain asbestos, PCB, or any other material that is considered hazardous by the Environmental Protection Agency or any other Authority Having Jurisdiction.

C. Replace materials of less than specified quality and relocate work incorrectly installed as directed by the Engineer at no additional cost to the Owner.

D. Provide name/data plates on major components of equipment with manufacturer's name, model number, serial number, capacity data and electrical characteristics attached in a conspicuous place.

E. Install materials and equipment with qualified trades people.

F. Maintain uniformity of manufacturer for equipment used in similar applications and sizes.

G. Fully lubricate equipment where required.

H. Follow manufacturer's instructions for installing, connecting, and adjusting equipment. Provide a copy of such instructions at the equipment during installation.

05/03/13 PERMIT SET

I. Where factory testing of equipment is required to ascertain performance, and attendance by the Owner's Representative is required to witness such tests, associated travel costs and subsistence shall be paid for by the Contractor.

J. Equipment capacities, ratings, etc., are scheduled or specified for job site operating conditions. Equipment sensitive to altitude shall be derated with the method of derating identified on the submittals.

K. Enclosures for electrical equipment installed in mechanical equipment rooms shall be NEMA type 1 gasketed. Enclosures for electrical equipment installed outdoors shall be NEMA type 3R.

L. Energy consuming equipment shall be certified for use in the State of California and shall meet the California Energy Code and local energy ordinances.

2.2 SUBSTITUTIONS

A. Contract Documents are based on equipment manufacturers as called out in the Specifications and indicated on the Drawings. Acceptance of substitute equipment manufacturers does not relieve Contractor of the responsibility to provide equipment and materials, which meet the performance as, stated or implied in the Contract Documents.

B. Submit proposals to provide substitute materials or equipment, in writing, with sufficient lead time for review prior to the date equipment must be ordered to maintain project schedule. Reimburse Owner for costs associated with the review of the proposed substitution whether substitution is accepted or rejected.

C. Indicate revisions required to adapt substitutions including revisions by other trades. Substitutions that increase the cost of the work and related trades are not permitted.

D. The proposed substitution shall conform to the size, ratings, and operating characteristics of the equipment or systems as specified and shown on the Drawings.

E. Proposals for substitutions shall include the following information:
   1. A description of the difference between the Contract Document requirements and that of the substitution, the comparative features of each, and the effect of the change on the end result performance. Include the impact of all changes on other contractors and acknowledge the inclusion of additional costs to the other trades.
   2. Schematic drawings and details.
   3. List of revisions to the Contract Documents that must be made if the substitution is accepted.
   4. Estimate of costs the Owner may incur in implementing the substitution, such as test, evaluation, operating and support costs.
   5. Statement of the time by which a Contract modification accepting the substitution must be issued, noting any effect on the Contract completion time or the delivery schedule.
   6. A statement indicating the reduction to the Contract price if the Owner accepts the substitution. Include required modifications to all related trades.

PART 3 - EXECUTION

3.1 FEES AND PERMITS

A. Pay all required fees and obtain all required permits related to the electrical installation.

B. Pay royalties or fees in connection with the use of patented devices and systems.

C. Provide controlled inspection where required by Authorities Having Jurisdiction or by these specifications.

3.2 SUBMITTALS AND REVIEWS

A. Submit shop drawings, manufacturer's product data sheets, samples, and test reports as specified.

B. Within two months after notice to proceed by the Owner or Owner's Representative, or after execution of Owner/Contractor Agreement, submit a complete typed list of all electrical equipment manufacturers and material suppliers for the equipment proposed to be provided on this project, as well as names of all subcontractors.

C. Within four months after notice to proceed by the Owner or Owner's Representative, or after execution of Owner/Contractor Agreement, prepare an index of all submittals for the project. Include a submittal identification number, a cross-reference to the Specification sections or Drawing number, and an item description. Prefix the submittal identification number by the Specification sections to which they apply. Indicate on each submittal, the submittal identification number in addition to the other data specified. All subcontractors shall utilize the assigned submittal identification number.

D. After the Contract is awarded, obtain complete shop drawings, product data and samples from the manufacturers, suppliers, vendors, and all subcontractors, for all materials and equipment as specified. Submit data and details of such materials and equipment for review. Prior to submission, certify that the shop drawings, product data and samples are in compliance with the Contract Documents. Check all materials and equipment upon their arrival on the job site and verify their compliance with the Contract Documents. Modify any work, which proceeds prior to receiving accepted shop drawings as required to comply with the Contract Documents and the shop drawings.

E. Review of submittals is for general compliance with the design concept and Contract Documents. Comments or absence of comments shall not relieve the Contractor from compliance with the Contract Documents. The Contractor remains solely responsible for details and accuracy, for confirming and correlating all quantities and dimensions, for selecting fabrication processes, for techniques of construction, for performing the work in a safe manner, and for coordinating the work with that of other trades.

F. No part of the work shall be started in the shop or in the field until the shop drawings and samples for that portion of the work have been submitted and accepted.

G. A minimum period of ten working days, exclusive of transmittal time, will be required in the Engineer's office each time a shop drawing, product data and/or samples are submitted for review. This time period must be considered by the Contractor in the scheduling of the work.

H. Submit one vellum and two bond prints of all items requiring shop drawings. Submit six copies of manufacturer's product submittals.

I. Submittals will be stamped as follows:

Stamp	Interpretation
No Exceptions Noted	Fabrication, manufacture, or construction may proceed providing submittal complies with the Contract Documents.
Exceptions Noted [ ] Resubmit for Record [ ] No Resubmission Required	Fabrication, manufacture, or construction may proceed providing submittal complies with the Contract Documents and the Engineer's notations are complied with. Within this category are two options: A resubmission for our records is required when corrections are necessary; A resubmission is not required if there are only minor comments.
Revise and Resubmit	The submittal does not comply with the Contract Documents; do not proceed with fabrication, manufacture, or construction. The work and shop drawings are not permitted at the job site. Resubmit appropriate shop drawings.

J. Submit materials and equipment by manufacturer, trade name, and model number. Include copies of applicable brochure or catalog material. Maintenance and operating manuals are not acceptable substitutes for shop drawings.

K. Identify each sheet of printed submittal pages (using arrows, underlining or circling) to show applicable sizes, types, model numbers, ratings, capacities and options actually being proposed. Cross out non-applicable information. Note specified features such as materials or paint finishes.

05/03/13 PERMIT SET

L. Include dimensional data for roughing in and installation and technical data sufficient to verify that equipment meets the requirements of the Contract Documents. Include wiring, piping and service connection data.

M. Maintain a complete set of reviewed and stamped shop drawings and product data on site.

N. For each room or area of the building containing electrical equipment, submit the following:
   1. Floor Plans: Plan and elevation layout drawings indicating the equipment in the exact location in which it is intended to be installed. These plans shall be of a scale not less than 1/4 inch to 1 foot. They shall be prepared in the following manner:
      a. Indicate the physical boundaries of the space including door swings and ceiling heights and ceiling types (as applicable).
      b. Illustrate all electrical equipment proposed to be contained therein. Include top and bottom elevations of all electrical equipment. The Drawings shall be prepared utilizing the dimensions contained in the individual equipment submittals. Indicate code and manufacturer's required clearances.
      c. Illustrate all other equipment therein such as conduits, detectors, luminaries, ducts, registers, pull boxes, wireways, structural elements, etc.
      d. Indicate the operating weight of each piece of equipment.
      e. Indicate the heat release from each piece of electrical equipment in terms of BTU per hour. This information shall be that which is supplied by the respective manufacturers.
      f. Illustrate concrete pads, curbs, etc.
      g. Indicate dimensions to confirm compliance with code-required clearances.
      h. Indicate maximum normal allowable operating temperature for each piece of equipment (as per each respective manufacturer's recommendation).
      i. Equipment removal routes.

O. The work described in shop drawing submissions shall be carefully checked by all trades for clearances (including those required for maintenance and servicing), field conditions, maintenance of architectural conditions and coordination with other trades on the job. Each submitted shop drawing shall include a certification that related job conditions have been checked by the Contractor and each Subcontractor and that conflicts do not exist.

P. The Contractor is not relieved of the responsibility for dimensions or errors that may be contained on submissions, or for deviations from the requirements of the Contract Documents. The noting of some errors but overlooking others does not grant the Contractor permission to proceed in error. Regardless of any information contained in the shop drawings, product data and samples, the Contract Documents govern the work and are neither waived nor superceded in any way by the review of shop drawings, product data and samples.

Q. Inadequate or incomplete shop drawings, product data and/or samples will not be reviewed and will be returned to the Contractor for resubmittal.

R. Indicate the following on the lower right hand corner of each shop drawing and on the front cover of each product data brochure cover: The submittal identification number; title of the sheet or brochure; name and location of the project; names of the Architect, Engineer, Contractor, Subcontractor, manufacturer, supplier, and vendor; the date of submittal; and the date of each correction, version and revision. Number all pages and drawings in product data brochures consecutively from beginning to end. Unless the above information is included, the submittal will be returned for resubmission. Resubmittals of product data or brochures shall include a cover letter summarizing the corrections made in response to the review comments.

S. The distribution equipment, short circuit and coordination study, and room layout submittals shall be submitted concurrently. Failure to submit concurrently may result in the immediate return of the submittal marked "REVISE AND RESUBMIT".

3.3 COORDINATION OF WORK

A. The Contract Documents establish scope, materials and quality but are not detailed installation instructions. Drawings are diagrammatic.

B. Coordinate work with related trades and furnish, in writing, any information necessary to permit the work of related trades to be installed satisfactorily and with the least possible conflict or delay.

05/03/13 PERMIT SET

C. The electrical drawings show the general arrangement of equipment and appurtenances. Follow these drawings as closely as the actual construction and the work of other trades will permit. Provide offsets, fittings, and accessories, which may be required but not shown on the Drawings. Investigate the site, and review drawings of other trades to determine conditions affecting the work, and provide such work and accessories as may be required to accommodate such conditions.

D. The locations of lighting fixtures, outlets, panels and other equipment indicated on the Drawings are approximately correct, but they are understood to be subject to such revision as may be found necessary or desirable at the time the work is installed in consequence of increase or reduction of the number of outlets, or in order to meet field conditions, or to coordinate with modular requirements of ceilings, or to simplify the work, or for other legitimate causes.

E. Exercise particular caution with reference to the location of panels, outlets, switches, etc., and have precise and definite locations accepted by the Engineer before proceeding with the installation.

F. The Drawings show only the general run of raceways and approximate locations of outlets. Any significant changes in location of outlets, cabinets, etc., necessary in order to meet field conditions shall be brought to the immediate attention of the Engineer for review before such alterations are made. Modifications shall be made at no additional cost to the Owner.

G. Verify with the Engineer the exact location and mounting height of outlets and equipment not dimensionally located on the Drawings prior to installation.

H. Circuit tags in the form of numbers are used where shown to indicate the circuit designation numbers in electrical panels. Show the actual circuit numbers on the as-built Record Drawings and on the associated typed panelboard directory card. Where circuiting is not indicated, provide required circuiting in accordance with the loading indicated on the Drawings and/or as directed.

I. The Drawings generally do not indicate the number of wires in conduit for the branch circuit wiring of fixtures and outlets, or the actual circuiting. Provide the correct wire size and quantity as required by the indicated circuiting and/or circuit numbers indicated, the control intent, referenced wiring diagrams (if any), the specified voltage drop or maximum distance limitations, and the applicable requirements of the NEC.

J. Carefully check space requirements with other trades to insure that equipment can be installed in the spaces allotted.

K. Wherever work interconnects with work of other trades, coordinate with other trades to insure that they have the information necessary so that they may properly install the necessary connections and equipment. Identify items (remote ballast, pull boxes, etc.) requiring access in order that the ceiling trade will know where to install access doors and panels.

L. Consult with other trades regarding equipment so that, wherever possible, motor controls and distribution equipment are of the same manufacturer.

M. Furnish and set sleeves for passage of electrical risers through structural masonry and concrete walls and floors and elsewhere as required for the proper protection of each electrical riser passing through building surfaces.

N. Provide firestopping around all pipes, conduits, ducts, sleeves, etc. which pass through rated walls, partitions and floors.

O. Provide detailed information on openings and holes required in precast members for electrical work.

P. Provide required supports and hangers for conduit and equipment, designed so as not to exceed allowable loadings of structures.

Q. Examine and compare the Contract Documents with the drawings and specifications of other trades, and report any discrepancies between them to the Engineer and obtain written instructions for changes necessary in the work. Install and coordinate the work in cooperation with other related trades. Before installation, make proper provisions to avoid interferences.

R. Wherever the work is of sufficient complexity, prepare additional detail drawings to scale to coordinate the work with the work of other trades. Detailed work shall be clearly identified on the

05/03/13 PERMIT SET

Drawings as to the area to which it applies. Submit these drawings to the Engineer for review. At completion include a set of these drawings with each set of Record Drawings.

S. Furnish services of an experienced Superintendent, who shall be in constant charge of all work, and who shall coordinate work with the work of other trades. No work shall be installed before coordinating with other trades.

T. Coordinate with the local electric utility company and the local telephone company as to their requirements for service connections and provide all necessary metering provisions, grounding, materials, equipment, labor, testing, and appurtenances.

U. Before commencing work, examine adjoining work on which this work is in any way affected and report conditions, which prevent performance of the work. Become thoroughly familiar with actual existing conditions to which connections must be made or which must be changed or altered.

V. Adjust location of conduits, panels, equipment, etc., to accommodate the work to prevent interferences, both anticipated and encountered. Determine the exact route and location of each conduit prior to fabrication.
   1. Right-of-Way: Lines which pitch have the right-of-way over those which do not pitch. For example: condensate, steam, and plumbing drains normally have right-of-way. Lines whose elevations cannot be changed have right-of-way over lines whose elevations can be changed.
   2. Provide offsets, transitions and changes in direction of conduit as required to maintain proper headroom and pitch on sloping lines.

W. In cases of doubt as to the work intended, or in the event of need for explanation, request supplementary instructions from the Engineer.

3.4 EXAMINATION OF SITE

A. Prior to the submitting of bids, visit the project site and become familiar with all conditions affecting the proposed installation and make provisions as to the cost thereof.

B. The Contract Documents do not make representations regarding the character or extent of the sub-soils, water levels, existing structural, mechanical and electrical installations, above or below ground, or other sub-surface conditions which may be encountered during the work. Evaluate existing conditions, which may affect methods or cost of performing the work, based on examination of the site or other information. Failure to examine the Drawings or other information does not relieve the Contractor of responsibility for the satisfactory completion of the work.

3.5 EXCAVATION AND BACKFILL

A. Provide excavation for the work of this Division. Excavate all material encountered, to the depths indicated on the Drawings or as required. Remove from the site excavated materials not required or suitable for backfill. Provide grading as may be necessary to prevent surface water from flowing into trenches or other excavations. Remove any water, which accumulates. Provide sheeting and shoring as may be necessary for the protection of the work and for the safety of personnel.

B. Provide trenches of widths necessary for the proper execution of the work. Grade bottom of the trenches accurately to provide uniform bearing and support the work on undisturbed soil at every point along its entire length. Except where rock is encountered, do not excavate below the depths indicated. Where rock excavations are required, excavate rock to a minimum overdepth of four inches below the trench depths indicated on the Drawings or required. Backfill overdepths in the rock excavation and unauthorized overdepths with loose, granular, moist earth, thoroughly machine-tamped to a compaction level of at least 95 percent to standard proctor density or 75 percent relative density or as specified by the Engineer. Whenever unstable soil that is incapable of properly supporting the work is encountered in the bottom of the trench, remove soil to a depth required and backfill the trench to the proper grade with coarse sand, fine gravel or other suitable material.

C. Excavate trenches for utilities that will provide the following minimum depths of cover from existing grade or from indicated finished grade, whichever is lower, unless otherwise specifically shown:
   1. Electric service: two feet minimum.

05/03/13 PERMIT SET

2. Telephone service: two feet minimum.

D. Trenches should not be placed within ten feet of foundation or soil surfaces, which must resist horizontal forces.

E. Do not backfill trenches until all required tests have been performed and installation observed by the Engineer. Comply with the requirements of other sections of the Specifications. Backfill shall consist of non-expensive soil with limited porosity. Deposit in six layers and thoroughly and carefully tamp until the work has a cover of not less than one foot. Backfill and tamp remainder of trench at one-foot intervals until complete. Uniformly grade the finished surface.

3.6 CUTTING AND PATCHING

A. Where cutting, channeling, chasing or drilling of floors, walls, partitions, ceilings or other surfaces is necessary for the proper installation, support or anchorage of conduit or other equipment, lay out the work carefully in advance. Repair any damage to the building, piping, equipment or defaced finished plaster, woodwork, metalwork, etc., using skilled tradespeople of the trades required at no additional cost to the Owner.

B. Do not cut, channel, chase or drill unfinished masonry, tile, etc., unless permission from the Engineer is obtained. If permission is granted, perform this work in a manner acceptable to the Engineer.

C. Where conduit or equipment are mounted on a painted finished surface, or a surface to be painted, paint to match the surface. Cold galvanize bare metal whenever support channels are cut.

D. Provide slots, chases, openings and recesses through floors, walls, ceilings, and roofs as required. Where these openings are not provided, provide cutting and patching to accommodate penetrations at no additional cost to the Owner.

3.7 MOUNTING HEIGHTS

A. Mounting heights shall conform to ADA requirements.

B. Verify exact locations and mounting heights with the Engineer before installation.

C. Electrical and telecommunications outlets shall be mounted no higher than 48 inches above finished floor to top of the outlet box and no lower than 15 inches above finished floor to bottom of the outlet box.

D. Electrical switches shall be mounted no higher than 44 inches above finished floor to top of the outlet box and no lower than 36 inches above finished floor to bottom of the outlet box.

E. Fire alarm manual pull stations shall be mounted no higher than 48 inches above finished floor to top of the outlet box and no lower than 36 inches above finished floor to bottom of the outlet box.

F. Outlets for public and other wall-mounted type telephones shall be installed so that the particular telephone installed conforms to ADA mounting height requirements.

G. Visual Alarms: Mount not less than 80 inches to the bottom or 96 inches to the top of the device.

H. Wall-Mounted Exit Signs: Two inches above top of door to bottom of sign.

I. Low-Level Exit Signs: Six inches to bottom of sign.

J. Stairwell and utility corridor wall-mounted lighting fixtures shall be mounted 8 feet-6 inches above finished floor or one foot below ceiling or structure above, whichever is lower.

3.8 CONTINUANCE OF EXISTING SERVICES

A. Existing electrical services not specifically indicated to be removed or altered shall remain as they presently exist.

B. Where existing services interfere with new construction, alter or reroute such existing equipment to facilitate new construction after obtaining written permission from the Engineer. Notification in writing giving two weeks advance notice of planned alteration is required.

C. Preserve continuity of service of existing facilities (related to damage or alteration due to new construction). Unauthorized alteration to existing equipment shall be corrected without additional cost to the Owner.

3.9 DEMOLITION

A. Remove, relocate, and reroute existing electrical equipment to facilitate new construction or remodeling work.

B. Examine the site before submitting a bid to observe existing conditions. Obtain Owner approval for scheduling a visit to the site.

C. Schedule demolition in advance. Schedule work to avoid disruption of normal operations.

D. Reconnect circuits serving equipment required to remain in service to other panelboards, motor control centers, or other appropriate distribution equipment. Provide additional panelboards, motor control centers, or other appropriate distribution equipment where there is insufficient available capacity in remaining existing equipment for reconnection.

E. Remove existing conduit and wire back to panelboard, motor control center, or other distribution source.

F. Where a circuit is interrupted by removal of a device or fixture from that circuit, provide additional conduit and wire to restore service to the remaining devices and fixtures on that circuit.

G. Electrical equipment to be removed that is in good working order shall be carefully removed and offered to the Owner. Items rejected by the Owner shall be removed from the project site and properly disposed of.

3.10 CLEANING UP

A. Avoid accumulation of debris, boxes, loose materials, crates, etc., resulting from the installation of this work. Remove from the premises each day all debris, boxes, etc., and keep the premises clean and free of dust and debris.

B. Clean all fixtures and equipment at the completion of the project. Wipe clean exposed lighting fixture reflectors and trim pieces with a non-abrasive cloth just prior to occupancy.

C. All electrical equipment shall be thoroughly vacuumed and wiped clean prior to energization and at the completion of the project. Equipment shall be opened for observation by the Engineer as required.

3.11 WATERPROOFING

A. Avoid, if possible, the penetration of any waterproof membranes such as roofs, machine room floors, basement walls, and the like. If such penetration is necessary, make penetration prior to the waterproofing and furnish all sleeves or pitch-pockets required. Advise the Engineer and obtain written permission before penetrating any waterproof membrane, even where such penetration is shown on the Drawings.

B. Restore waterproofing integrity of walls or surfaces after they have been penetrated without additional cost to the Owner.

3.12 SUPPORTS

A. Support work in accordance with the best industry practice. Provide supports, hangers, auxiliary structural members and supplemental hardware required for support of the work.

B. Provide supporting frames or racks extending from floor slab to ceiling slab for work indicated as being supported from walls where the walls are incapable of supporting the weight. In particular, provide such frames or racks in electric closets and mechanical equipment rooms.

C. Provide supporting frames or racks for equipment which is to be installed in a freestanding position.

D. Supporting frames or racks shall be of standard angle, standard channel or specialty support system steel members, rigidly bolted or welded together and adequately braced to form a substantial structure. Racks shall be of ample size to assure a workmanlike arrangement of all equipment mounted on them.

E. Adequate support of equipment (including outlet, pull and junction boxes and fittings) shall not depend on electric conduits, raceways, or cables for support.

05/03/13 PERMIT SET

F. Electrical equipment shall not rest on or depend for support on suspended ceiling media (tiles, lath, plaster, as well as splines, runners, bars and the like in the plane of the ceiling). Provide independent support of electrical equipment. Do not attach to supports provided for ductwork, piping or work of other trades.

G. Provide required supports and hangers for conduit, equipment, etc., so that loading will not exceed allowable loadings of structure. Electrical equipment and supports shall not come in contact with work of other trades.

3.13 FASTENINGS

A. Fasten equipment to building structure in accordance with the best industry practice.

B. Where weight applied to building attachment points is 100 pounds or less, conform to the following as a minimum:
   1. Wood: Wood screws.
   2. Concrete and solid masonry: Bolts and expansion shields.
   3. Hollow construction: Toggle bolts.
   4. Solid metal: Machine screws in tapped holes or with welded studs.
   5. Steel decking or sub-floor: Fastenings as specified below for applied weights in excess of 100 pounds.

C. Where weight applied to building attachment points exceeds 100 pounds, but is 300 pounds or less, conform to the following as a minimum:
   1. At concrete slabs provide 24-inch by 24-inch by 1/2-inch steel fishplates on top with through bolts. Fishplate assemblies shall be chased in and grouted flush with the top of slab screed line, where no fill is to be applied.
   2. At steel decking or sub-floor for all fastenings, provide through bolts or threaded rods. The tops of bolts or rods shall be set at least one inch below the top fill screed line and grouted in. Suitable washers shall be used under bolt heads or nuts. In cases where the decking or sub-floor manufacturer produces specialty hangers to work with their decking or sub-floor, such hangers shall be provided.

D. Where weight applied to building attachment points exceeds 300 pounds, coordinate with and obtain the approval of Engineer and conform to the following as a minimum:
   1. Provide suitable auxiliary channel or angle iron bridging between building structural steel elements to establish fastening points. Bridging members shall be suitably welded or clamped to building steel. Provide threaded rods or bolts to attach to bridging members.

E. For items, which are shown, as being ceiling-mounted at locations where fastening to the building construction element above is not possible, provide suitable auxiliary channel or angle iron bridging tying to the building structural elements.

F. Wall-mounted equipment may be directly secured to wall by means of steel bolts. Groups or arrays of equipment may be mounted on adequately sized steel angles, channels, or bars. Prefabricated steel channels as manufactured by Kindorf or Unistrut are acceptable.

3.14 IDENTIFICATION

A. Identify electrical equipment with permanently attached black phenolic nameplates with 1/2-inch high white engraved lettering. Identification shall include equipment name or load served as appropriate. Nameplates for equipment connected to the emergency power system shall be red with white lettering. Nameplates shall be attached with cadmium-plated screws; peel-and-stick tape or glue-on type nameplates are not allowed.

B. Cable tags shall be flameproof secured with flameproof non-metallic cord.

C. Provide an engraved nameplate for each switch controlling loads, which are not local to the switch.

D. Wherever raceways for future use are terminated outside of the building, stake the location with a 2-foot long, 1-inch by 1-inch clear heart redwood stake.

E. See individual Sections for additional identification requirements.

05/03/13 PERMIT SET

3.15 PROHIBITED LABELS AND IDENTIFICATIONS

A. In all public areas, tenant areas, and similar locations within the project, the inclusion or installation of any equipment or assembly which bears on any exposed surface any name, trademark, or other insignia which is intended to identify the manufacturer, the vendor, or other source(s) from which such object has been obtained, is prohibited, unless otherwise approved by Owner.

B. Required UL labels shall not be removed nor shall identification specifically required under the various technical sections of the Specifications be removed.

3.16 EQUIPMENT PADS AND ANCHOR BOLTS

A. Provide concrete pads under all floor-mounted electrical equipment. Equipment pads shall conform to the shape of the piece of equipment it serves with a minimum 1-inch margin around the equipment and supports. Pads shall be a minimum of 4 inches high and made of a minimum 28 day, 2500 psi concrete reinforced with 6-inch by 6-inch 6/6 gauge welded wire mesh. Trowel tops and sides of pad to smooth finishes, equal to those of the floors, with all external corners bullnosed to a 3/4-inch radius. Shop drawings stamped “NO EXCEPTIONS NOTED” shall be used for dimensional guidance in sizing pads.

B. Provide galvanized anchor bolts for all equipment placed on concrete equipment pads, inertia blocks, or on concrete slabs. Provide bolts of the size and number recommended by the manufacturer of the equipment and locate by means of suitable templates. Equipment installed on vibration isolators shall be secured to the isolator. Secure the isolator to the floor, pad, or support as recommended by the vibration isolation manufacturer.

C. Where equipment is mounted on gypsum board partitions, the mounting screws shall pass through the gypsum board and securely attach to the partition studs. As an alternative, the mounting screws may pass through the gypsum board and be securely attached to 6 inches square, 18 gauge galvanized metal backplates, which are attached to the gypsum board with an approved non-flammable adhesive. Toggle bolts installed in gypsum board partitions are not allowed.

3.17 DELIVERY, DRAYAGE AND HAULING

A. Provide drayage, hauling, hoisting, shoring and placement in the building of equipment specified and be responsible for the timely delivery and installation of equipment as required by the construction schedule. If any item of equipment is received prior to the time that it is required, the Contractor shall be responsible for its proper storage and protection until the time it is required. Pay for all costs of drayage or storage.

B. If equipment is not delivered or installed at the project site in a timely manner as required by the project construction schedule, the Contractor shall be responsible for resulting disassembly, re-assembly, manufacturer’s supervision, shoring, general construction modification, delays, overtime costs, etc., at no additional cost to the Owner.

3.18 EQUIPMENT AND MATERIAL PROTECTION

A. Protect the work, equipment, and material of other trades from damage by work or workmen of this trade, and correct damaged caused without additional cost to the Owner.

B. Take responsibility for work, materials, and equipment until finally inspected, tested and accepted. Protect work against theft, injury, or damage, and carefully store material and equipment received on site, which is not immediately installed. Close open ends of work with temporary covers or plugs during construction to prevent entry of obstructing material. Cover and protect equipment and materials from damage due to water, spray-on fireproofing, construction debris, etc. Store equipment to moisture damage in dry, heated spaces.

C. Provided adequate means for fully protecting finished parts of materials and equipment against damage from whatever cause during the progress of the work until final acceptance. Protect materials and equipment in storage and during construction in such a manner that no finished surfaces will be damaged or marred, and moving parts are kept clean and dry. Do not install damaged items; take immediate steps to obtain replacement or repair.

05/03/13 PERMIT SET

D. Lighting fixture troffers with parabolic reflectors shall be installed with factory-mounted plastic protective bags around parabolic reflector assembly. Remove protective bag just prior to occupancy.

3.19 TESTING OF ELECTRICAL SYSTEMS

A. Comply with the project construction schedule for the date of final performance and acceptance testing, and complete work sufficiently in advance of the Contract completion date to permit the execution of the testing prior to occupancy and Contract close-out. Complete any adjustments and/or alterations, which the final acceptance tests indicate as necessary for the proper functioning of all equipment prior to the completion date. See individual Sections for extent of testing required.

B. Provide a detailed schedule of completion indicating when each system is to be completed and outlining when field testing will be performed. Submit completion schedule for review within six months after the notice to proceed by Owner's Representative has been given. Update this schedule periodically as the project progresses.

3.20 OPERATING INSTRUCTIONS

A. Provide the services of factory-trained specialists to provide an operating instructions seminar for equipment and systems. The seminar shall be conducted over a five-day (consecutive) period. Instruction time is defined as straight time working hours and does not include nights, weekends, or travel time to and from the project.

B. Submit seminar agenda, schedule and list of representatives to the Owner for approval 30 days prior to suggested date of seminar. Do not commence seminar until the Owner has issued a written acceptance of the starting time and attendees. Confirm attendance of seminar by written notification to participants.

C. Instruct Owner's operating personnel in proper starting sequences, operation, shut-down, general maintenance and preventative maintenance procedures, including normal and emergency procedures.

D. Submit final copies of Record Drawings and Operating and Maintenance Manuals to Owner at seminar.

E. Submit a written record of minutes and attendees of the seminar to the Owner.

3.21 OPERATING AND MAINTENANCE MANUALS

A. Provide Operating and Maintenance Manuals for equipment and materials furnished under this Division.

B. Submit three final copies of Operating and Maintenance Manuals for review at least ten weeks before the completion date. Assemble data in a completely indexed volume or volumes in three-ring binders and identify the size, model, and features indicated for each item. Print the project name on the outside of the binders.

C. Maintenance manuals shall include complete cleaning and servicing data compiled in a clear and easily understandable format. Show model numbers of each piece of equipment, complete lists of replacement parts, capacity ratings, and actual loads.

D. Provide the following information where applicable:
   1. Identifying name and mark number
   2. Locations (where several similar items are used, provide a list)
   3. Complete nameplate data
   4. Certified Record Drawings and Final Reviewed submittals
   5. Parts list
   6. Performance curves and data
   7. Wiring diagrams
   8. Manufacturer's recommended operating and maintenance instructions with all non-applicable information deleted
   9. List of spare parts recommended for normal service requirements
   10. Assembly and disassembly instructions with exploded-view drawings where necessary

11. Test reports
12. Trouble shooting diagnostic instructions, where applicable

3.22 RECORD DRAWINGS

A. The Contractor shall maintain on a daily basis at the Project site a complete set of Record Drawings. The Record Drawings shall initially consist of a set of blueline prints or AutoCAD files of the Contractor's Coordination Drawings. The prints shall be marked or the AutoCAD files electronically updated to show the precise location of all buried or concealed work and equipment, including embedded conduit, raceways and boxes, and all changes and deviations in the Electrical work from that shown on the Contract Documents. This requirement shall not be construed as authorization for the Contractor to make changes in the layout or work without definite written instructions from the Architect or Engineer. The updated Coordination Drawings shall be used to produce the final Record Drawings that shall be delivered to the Owner in AutoCAD electronic format media upon Project completion.

B. Record dimensions clearly and accurately to delineate the work as installed. Suitably identify locations of all equipment by at least two dimensions to permanent structures.

C. The Contractor and Subcontractor shall mark all in-progress Record Drawings on the front lower right hand corner with a rubber stamp impression or an AutoCAD image similar to the following:

RECORD DRAWING
(3/8-inch high letters)

To be used for recording Field Deviations and Dimensional Data Only
(5/16-inch high letters)

D. Upon completion of the work, the Contractor and Subcontractor(s) shall certify all Record Drawings on the front lower right hand corner adjacent to the above marking with a rubber stamp impression or an AutoCAD image similar to the following:

RECORD DRAWING
CERTIFIED CORRECT
(3/8-inch high letters)

(Printed Name of General Contractor)
(5/16-inch high letters)
Date:_____

(Printed Name of Subcontractor)
(5/16-inch high letters)
Date:_____

E. Prior to final acceptance of the Work of this Division, the Contractor shall submit properly certified Record Drawings to the Architect and Engineer for review and shall make changes, corrections, or additions as the Architect and/or Engineer may require to the Record Drawings. After the Architect's and Engineer's review, and any required Contractor revisions, the Record Drawings shall be delivered to the Owner on electronic media in AutoCAD format. The Architect and Engineer do not assume any responsibility for the accuracy or completeness of the Record Drawings.

3.23 FINAL PUNCHLIST

A. Prior to the Final Punchlist, certify that systems and equipment are complete, operational, and are in compliance with the Contract Documents.

05/03/13 PERMIT SET

B. During the Final Punchlist, provide personnel with access keys, hand held radios, and necessary expertise to operate each system and piece of equipment to demonstrate operational compliance with the Contract Documents.

C. Any deficiencies noted on the Final Punchlist shall be expeditiously corrected and certified in writing.

3.24 EARLY OCCUPANCY

A. Complete those systems which are necessary to allow partial early occupancy of the building.

B. Verify and comply with requirements for temporary occupancy with the local Building and Fire Departments.

END OF SECTION

05/03/13 PERMIT SET

SECTION 260502

EQUIPMENT CONNECTIONS AND COORDINATION

PART 1 - GENERAL

1.1 DESCRIPTION

A. Provide equipment connections and coordination in accordance with the Contract Documents.

1.2 SUBMITTALS

A. No requirements.

PART 2 - PRODUCTS

2.1 NOT APPLICABLE

PART 3 - EXECUTION

3.1 GENERAL

A. Provide equipment connections and coordination in accordance with manufacturer's recommendations and product submittals.

B. Provide disconnect switches for equipment. Where equipment requires fuse protection, provide fusible type disconnect switches with fuses rated in accordance with equipment manufacturer's requirements. Disconnect switches for single-phase equipment shall be thermal overload type. Locate disconnect switches in coordination with the layout of equipment. Provide supports for a free-standing installation if required to allow access to disconnect switch and/or proximity to equipment served.

C. Provide final connections to hard-wired equipment with a minimum of two feet of liquid-tight flexible metal conduit.

D. Verify the requirements of cord and plug equipment and provide receptacles, branch circuiting and branch circuit overcurrent protection to match. Receptacle types shown on the Drawings are for bidding purposes only.

E. Where equipment is supplied from conduit run under or within the floor slab, extend conduit to a junction box mounted on a two-foot stub up of rigid steel conduit. Provide suitable bracing on conduit stub up.

F. Where equipment is fed from overhead, support conduit on flanged floor type fitting.

3.2 EQUIPMENT CONNECTION TYPES

A. Provide equipment connection types as indicated on the equipment connection schedule.

B. Equipment Connection Types:

1. Type FR: Fractional horsepower single-phase motor. Provide thermal overload/disconnect switch and motor connection.
2. Type FWS: Equipment furnished with starter. Install starter and provide connection to starter and connection from starter to equipment.
3. Type M: Motor with starter provided under Division 26. Provide disconnect switch and motor connection.
4. Type SPC: Single point connection. Provide single point connection to equipment provided with factory-mounted starter/controller listed for single point power connection. Where required by code or the equipment manufacturer, provide fusible disconnect switch with fuses sized in accordance with equipment nameplate requirements.
5. Type VFD: Variable frequency drive furnished under Division 23. Install VFD and provide connection to VFD and connection from VFD to equipment.

3.3 MECHANICAL EQUIPMENT

A. Provide electrical connections to mechanical equipment.

05/03/13 PERMIT SET

B. Where motor controllers are furnished by others, install controller and provide connections at line and load side of controllers.

C. Where reduced voltage, multiple speed, duplex, triplex, lead-lag, pony motor or other unusual controller types are utilized, coordinate specific requirements of motor(s) and controller and provide required wiring between motor(s) and controller.

D. For electric water coolers verify whether the equipment is hard wired, cord- and plug-connected and whether a remote chiller is provided. Provide circuiting and connections to match.

3.4 OWNER FURNISHED EQUIPMENT

A. Provide electrical connections to Owner-furnished equipment.

B. Inspect Owner-furnished equipment for damage, defects, missing components, etc. Report deficiencies to the Owner immediately. Do not install or connect deficient equipment.

C. Provide supports, fastenings, and auxiliary hardware necessary for a complete installation in accordance with the finished building conditions.

END OF SECTION

05/03/13 PERMIT SET

SECTION 260519

600V WIRE AND CABLE

PART 1 - GENERAL

1.1 DESCRIPTION

A. Provide 600V wire and cable in accordance with the Contract Documents.

B. Related work specified in other divisions of these specifications.
   1. Raceways and Boxes

1.2 REFERENCE STANDARDS

A. Rubber Insulated Wire and Cable: ICEA S-19-81, NEMA WC 3, and UL 44.

B. Thermoplastic Insulated Wire and Cable: ICEA S-61-402, NEMA WC 3, and UL 83.

C. Cross-Linked Thermosetting Polyethylene Insulated Wire and Cable: ICEA S-66-524, NEMA WC 7, and UL 44.

D. Service Entrance Cable: UL 854.

E. Annealed Copper Wire for Conductors: ASTM B-3.

F. Terminal Blocks: UL 1059.

1.3 QUALITY ASSURANCE

A. Wire and cable shall be of the same manufacturer.

1.4 SUBMITTALS

A. Field test reports.

1.5 FIELD TESTING

A. Inspect splices and terminations and make mechanically and electrically tight during the 15-day period immediately prior to final acceptance of the work.

B. Feeder insulation shall be tested after installation, and before final connection.
   1. Tests shall be performed with a 500 volt megger, and conductors shall test free from short circuits and grounds.
   2. Conductors shall be tested phase-to-phase and phase-to-ground.
   3. Furnish the instruments, materials, and labor required.

C. Demonstration: Subsequent to wire and cable installation and connection, energize circuits and demonstrate functioning in accordance with contract requirements. Correct deficiencies and retest to demonstrate compliance.

PART 2 - PRODUCTS

2.1 ACCEPTABLE MANUFACTURERS

A. Wire and Cable:
   1. Copper: Anaconda, Brand-Rex, Collyer, Cyprus, General Cable, Hatfield, Houston, Kaiser, Kerite, National, Okonite, Simplex, or Triangle.

B. Connectors:
   1. Wire size number 14 through number 6:
      a. Hand applied: Piggy (Thomas & Betts), Scotchlock (3M), or Wing Nut (Ideal).
      b. Tool applied: Burndy HYDENT, or Thomas & Betts Stakon.
   2. Wire size number 4 through number 1:
      a. Tool applied: One-hole compression type, Burndy HYLUG, or Thomas & Betts 54000 Series.
   3. Wire size number 1/0 through 1000 MCM:
      a. Tool applied: Two-hole compression type, Burndy HYLUG, or Thomas & Betts 54000 series.

05/03/13 PERMIT SET

C. Electrical Tape:
   1. Insulating type, Johns-Manville or 3M.

2.2 WIRE AND CABLE

A. General:
   1. 600V minimum insulating rating.

B. Conductor:
   1. Electrical grade, annealed copper, tinned if rubber insulated, and fabricated in accordance with ASTM and ICEA standards. Minimum size number 12 for branch circuits; number 14 for control wiring.
   2. Aluminum conductors are not permitted.

C. Stranding and Number of Conductors:
   1. Number 12 and larger, stranded ASTM Class B.
   2. Control wires stranded in accordance with ASTM Class B stranding designations.
   3. Cables for low-voltage systems shall be multi-conductor type unless otherwise noted.

D. Insulation:
   1. 600 volts, surface-printed identification, listed per UL 83:
      a. Conductors in control panel enclosures shall be Type MTW.
      b. Conductors in wet, underground, or outdoor locations shall be Type XHHW-2.
      c. All conductors other than Type MTW and XHHW-2 shall be Type THHN.

E. Color Coding:
   1. Wiring shall be color coded as follows:

Conductor	120/208V System
Phase A	Black
Phase B	Red
Phase C	Blue
Neutral	White
Ground	Green
Isolated Ground	Green/Yellow Stripe

   2. Wire number 8 and smaller shall be factory-color coded the entire length. Wire number 6 and larger shall be color coded by color taping entire length of exposed conductor at all accessible locations or factory-color coded where available.
   3. Control wiring shall be color coded in accordance with manufacturer's recommendations.

PART 3 - EXECUTION

3.1 GENERAL

A. Maximum of three branch circuits in one conduit unless otherwise indicated.

B. Provide minimum number 10 wiring for 120-volt branch circuits exceeding 150 feet in length from panelboard to furthest outlet.

C. Do not install wire until raceway systems are complete.

D. Provide cable supports for vertical risers.

E. Wire size shall be uniform for the entire length of the circuit unless noted otherwise.

F. Do not splice feeders or dedicated branch circuits unless otherwise indicated.

G. Make connections, splices, taps, and joints with solderless devices, mechanically and electrically secure. Coat connections with oxide inhibitor and torque to manufacturer's specifications.

H. Label conductors with panel and circuit number at all accessible locations.

I. Lubricate cables to facilitate pulling. Lubrication material shall be inert to cable insulation and raceways.

J. Install compression connectors with hydraulic die, embossing die code into connector. Connect to bus with Bellville type washers for positive pressure over complete contact area. Insulate with heat-shrink tubing.

K. Provide a separate neutral for dimmed branch circuits, ground fault interrupter branch circuits, and branch circuits serving isolated ground and isolated ground surge suppressor type receptacles.

END OF SECTION

05/03/13 PERMIT SET

SECTION 260526

GROUNDING SYSTEM

PART 1 - GENERAL

1.1 DESCRIPTION

A. Provide grounding system in accordance with the Contract Documents.

1.2 QUALITY ASSURANCE

A. Utility company approval of service installation.

1.3 REFERENCE STANDARDS

A. UL 467.
B. ANSI C-1.
C. IEEE 142.
D. NEC.
E. National Electrical Safety Code.
F. Utility company requirements.

1.4 SUBMITTALS

A. Field test report.

1.5 FIELD TESTING

A. Resistance testing of ground rod system indicating maximum 5 ohms resistance to ground.

PART 2 - PRODUCTS

2.1 GENERAL

A. Grounding connections shall be brazed molded exothermic welded, bolted clamp terminal, or pressure connector type.

PART 3 - EXECUTION

3.1 GENERAL

A. Metallic raceways, cable trays, cable armor, cable sheath, enclosures, equipment frames, fittings, and other metallic noncurrent-carrying equipment parts and surfaces shall be effectively bonded to the grounding system. Nonconductive paint, enamel, or similar coating shall be removed at threads and contact surfaces to preserve grounding continuity or fittings shall be provided to make such removal unnecessary.

B. Neutral wiring shall be grounded at the system point of origin only and shall be isolated from downstream grounding systems.

C. Provide an insulated grounding conductor for all segments of branch circuits serving motors controlled by variable frequency drive controllers.

D. Bond interior metal piping systems to the grounding electrode system. Where metallic piping and duct systems are rendered metallically non-continuous by nonconductive couplings, provide bonding jumpers to provide grounding continuity.

E. Receptacles and lighting fixtures shall be grounded to the outlet box by means of a bonding jumper between the outlet box and the receptacle or lighting fixture grounding terminal.

F. Feeders and branch circuits shall be provided with an insulated grounding conductor run with the circuit conductors. This grounding conductor shall be in addition to the ground path provided by the continuously grounded metallic raceway system that encloses the phase and neutral conductors.

05/03/13 PERMIT SET

G. Provide bolted clamp terminal connectors where connected to removable equipment.

H. Provide brazed molded exothermic welded connections to ground rods and connections to building structural steel.

END OF SECTION

05/03/13 PERMIT SET

SECTION 260533

RACEWAYS AND BOXES

PART 1 - GENERAL

1.1 DESCRIPTION

A. Provide raceways and boxes in accordance with the Contract Documents.

1.2 SUBMITTALS

A. Conduit, Boxes, Wireways and Auxiliary Gutters:
   1. No requirements.

B. Modular Wiring Systems:
   1. Manufacturer's product data sheets of system components.
   2. 1/8-inch scale plans showing layout of lighting fixtures and modular wiring system.

1.3 IDENTIFICATION

A. Mark junction box covers with permanent stencil identification of panelboard and circuit numbers of wiring contained within.

B. Paint fire alarm and fire pump system boxes red.

PART 2 - PRODUCTS

2.1 ACCEPTABLE MANUFACTURERS

A. Conduit and Boxes:
   1. UL Listed and labeled products of any manufacturer meeting the specified performance requirements are acceptable.

B. Modular Wiring System:
   1. Reloc, Dual-Lite, or equal.

C. Wireways and Auxiliary Gutters:
   1. Square D, or equal.
   2. Wireways and auxiliary gutters shall be UL Listed and labeled.

2.2 CONDUIT AND FITTINGS

A. Rigid Steel Conduit:
   1. Rigid conduit, heavy wall, hot-dipped galvanized inside and out, threaded ends.
   2. Rigid steel conduit shall have steel or malleable iron fittings.
   3. Split or three-piece couplings shall be electroplated, malleable cast iron couplings.
   4. Insulated grounding bushings shall be threaded malleable cast iron body with plastic insulated throat and steel, lay in ground lug with compression screw.
   5. Insulated metallic bushings shall be threaded malleable cast iron body with plastic insulated throat..

B. Electrical Metallic Tubing:
   1. Continuous, seamless steel tubing galvanized or sherardized on exterior, coated on interior with smooth hard finish of lacquer, varnish or enamel.
   2. Steel, compression type fittings. Provide concrete type fittings where required.

C. Metal Clad Cable:
   1. Light steel or aluminum armor, copper conductors, insulated copper equipment grounding conductor, and internal marker tape.
   2. Snap-in grounding type insulated throat type fitting.

D. Flexible Steel Conduit:
   1. Single strip, continuous, flexible interlocked double-wrapped steel, hot-dip galvanized inside and out forming smooth internal wiring channel.
   2. Steel, compression type fittings.

05/03/13 PERMIT SET

E. Liquid Tight Flexible Conduit:
   1. Same as flexible steel conduit except with tough, inert, watertight plastic outer jacket.
   2. Fittings shall be cast malleable iron body and gland nut, cadmium-plated with one-piece brass grounding bushings threaded to interior of conduit. Spiral molded vinyl sealing ring between gland nut and bushing and nylon-insulated throat.

F. PVC Coated Rigid Steel Conduit:
   1. Fittings shall be rigid steel conduit coated with PVC or polyethylene.

2.3 MODULAR WIRING SYSTEM

A. Factory pre-assembled connectors and pre-wired cable assemblies to interface with lighting fixtures and lighting switches. UL 498 overload test for connecting or disconnecting under load. UL Listed for use in air handling plenums.

B. Components shall be color coded for voltage class, function keyed, and dead fronted to avoid the possibility of electrical shock. Cables shall be capable of connecting to any fixture connector on respective switching function.

C. Connectors shall be made of injection molded polyester thermoset compound with up to four copper alloyed spade pins or taps for positive contact, two positive locking latches and rated for 20 amps. Provide one multi-purpose flexible connector with two power-out (one un-switched and one switched) and one switchleg connection faces at each lighting fixture female receptacle to allow for switched or un-switched functions. Provide one female receptacle for each lighting fixture. Receptacle shall be capable of rotating 270 degrees to reduce excessive stress that may be caused by the cable assemblies. Receptacles shall be recessed or capable of being mounted in a standard 1/2-inch knockout allowing for end-mount conversions in the field where necessary.

D. Cable assemblies shall be constructed using a flexible armor jacket with insulated solid 12 gauge copper conductors. Provide a full size insulated grounding conductor in each cable assembly. Each cable assembly shall be supplied with a minimum of two feet of cable more than what is required to connect from fixture to fixture. Quantity of conductors in each cable assembly shall be as required.

E. Distribution junction boxes shall contain up to four receptacles mounted in a UL Listed enclosure. Provide with external flanges for mounting to building structure.

2.4 WIREWAYS AND AUXILIARY GUTTERS

A. Sizes and shapes as indicated and/or as required.

B. Provide necessary elbows, tees, connectors, adapters, etc.

C. Continuous removable cover secured with screws and keyhole slots. Hinged cover where installed above suspended ceiling.

D. Provide wire retainers at not greater than 12 inches on center.

2.5 OUTLET, JUNCTION, AND PULL BOXES

A. Cast Type Boxes:
   1. Ferrous alloy box with inside threaded hubs for rigid steel conduit.
   2. Aluminum box with threaded hubs for rigid aluminum conduit.
   3. Ferrous alloy box with compression or inside threaded hubs with adapter for electrical metallic tubing.
   4. Cast raised cover, size matched to contour of box.
   5. Tapered threads for hubs.

B. Galvanized Pressed Steel Type Boxes:
   1. General:
      a. Pressed steel, galvanized or cadmium-plated, 4 inches minimum octagonal or square with galvanized cover or extension ring as required.
   2. Concrete Box:
      a. 4 inches minimum octagonal with removable backplate. Depth of box shall allow for minimum of 1 inch of concrete to be poured around the backplate.
   3. Lighting Fixture Box:

05/03/13 PERMIT SET

a. 4 inches minimum octagon.
b. Where fixtures are mounted on or in an accessible type ceiling and a modular wiring system is not used, provide a junction box and extend flexible steel conduit to each fixture.

4. Provide 3/8-inch no-bolt fixture studs where required.

C. Sheet Steel Boxes:
1. No. 12 gauge sheet steel for boxes with maximum side less than 40 inches, and maximum area not exceeding 1,000 square inches; riveted or welded 3/4-inch flanges at exterior corners.
2. No. 10 gauge sheet steel for boxes with maximum side 40 to 60 inches, and maximum area 1,000 to 1,500 square inches; riveted or welded 3/4-inch flanges at exterior corners.
3. No. 10 gauge sheet steel riveted or welded to 1.5 inch by 1.5 inch by 1/4-inch welded angle iron framework for boxes with maximum side exceeding 60 inches and more than 1,500 square inches in area.
4. Covers:
a. Same gauge steel as box.
b. Subdivided single covers so no section of cover exceeds 50 pounds.
c. Machine bolts or machine screws threaded into tapped holes.
5. Paint:
a. Rust inhibiting primer, ANSI 61 grey enamel finish coat.

2.6 ELECTRICAL BOX PADS

A. Non-Fire Rated: equal to Lowry's Outlet Box Pads as manufactured by Harry A. Lowry Associates, Sun Valley, California.

B. Fire Rated: equal to Putty Pads manufactured by Specified Technologies, Inc.

PART 3 - EXECUTION

3.1 GENERAL

A. Provide raceways for all systems. Minimum conduit size shall be 1/2-inch. No wiring shall be installed without a raceway. All electrical and communication wiring shall be installed in conduit.

B. Protect metallic raceway in earth or fill from corrosion with two coats of corrosion-resistant paint or tape wrap.

C. Elbows for conduit installed below grade or embedded within floor slabs shall be PVC coated rigid steel conduit.

D. Tie embedded raceways securely in place prior to concrete placement. Raceways installed below or within floor slabs shall extend a minimum of 4 inches above the finished slab or housekeeping pad to the first connector. Install capped bushings on conduit stub ups.

E. Locate raceways so that the integrity of structural members is not affected and they do not conflict with the services of other trades. Draw up couplings and fittings full and tight. Protect threads from corrosion after installation with zinc chromate or equivalent protection.

F. Conceal raceways except at surface-mounted cabinets and freestanding equipment. Install minimum of 6 inches from flues, steam pipes, or other heated lines. Provide flashing and counter-flashing for waterproofing of raceways which penetrate the roof. Install power raceways a minimum of 24 inches from telecommunications raceways, cross at 90-degree angle. Route exposed raceways and raceways above suspended ceilings parallel or perpendicular to building lines with right-angle turns and symmetrical bends. Provide sleeves in concrete walls, floor slabs and partitions. Waterproof sleeved raceways where required.

G. Provide raceway expansion joints for exposed and concealed raceways at expansion joints and between structures to compensate for differential movement. Provide bonding conductor.

H. Provide one empty 3/4-inch raceway for each three spare unused poles or spaces of flush-mounted panelboards. Terminate conduit in an accessible location for future extension.

I. Provide raceways with appropriate seal-offs, explosion-proof fittings, etc. in special occupancy areas as required. Provide conduit seal-offs where portions of an interior raceway system pass

05/03/13 PERMIT SET

through walls, ceilings or floors which separate adjacent rooms having substantially different maintained temperatures, refrigeration, or cold storage rooms.

J. Provide pull cord in empty raceways. Tag both ends noting destination.

K. Clear raceway of all obstructions and dirt prior to pulling in wires or cables. Use ball mandrel (diameter approximately 85 percent of conduit insider diameter) followed by close-fitting wire brush and wad of felt or similar material. This assembly may be pulled with, but ahead of cable being installed. Clean empty raceways similarly. Clear or replace any raceway which rejects ball mandrel.

L. Install exterior underground conduits 24 inches minimum below finished grade. Do not penetrate waterproof membranes unless proper seal is provided.

M. Secure raceways clamps or supports to masonry materials with toggle bolts, expansion bolts, or steel inserts. Install raceway on steel construction with approved clamps which do not depend on friction or set-screw pressure alone.

N. Provide independent support of raceways larger than 3/4 inch. Provide uni-strut support and threaded rod to structure above for multiple suspended raceways run together. Use of lathe channels or other miscellaneous steel to support raceways is not permitted. Use listed supports such as uni-strut or similar systems for support.

O. Raceways Embedded in Floor Slabs:
   1. Raceways shall not be installed in slab without the approval of the Structural Engineer.
   2. Raceways shall not interfere with placement of floor slab reinforcement components.
   3. Install raceways between the upper and the lower layers of reinforcing steel.
   4. Space raceways not less than 8 inches on centers except where they converge at panels or junction boxes.
   5. Raceways running parallel to slabs supports, such as beams, columns and structural walls, shall be installed not less than 12 inches from such supporting elements.

P. Non-Metallic Raceway Installations:
   1. Joints shall be made using the material recommended by the raceway manufacturer. Components shall be cleaned prior to assembly.
   2. Raceway cutoffs shall be square and shall not deform conduit. Ream rough surfaces.
   3. Provide male box adapters to terminate raceways.
   4. Where separable terminations are required, provide PVC threaded adapters with locknuts or bushings. Provide “O” rings for watertight installations.
   5. Bends shall be made by methods that do not deform or damage the conduit.
   6. Provide expansion fittings where required.
   7. Raceway supports shall be installed to allow the non-metallic conduit to slide through the supports.
   8. Non-metallic raceway is not permitted within the building.

Q. Raceways above Suspended Ceilings:
   1. Single runs of 1/2-inch or 3/4-inch raceways may be supported from ceiling support wires where permitted by the rating of the ceiling system.
   2. Provide independent support of raceways larger than 3/4 inch. Provide independent support of multiple raceways (more than one). Provide uni-strut support and threaded rod to structure above. Attachment to ceiling support wires is not permitted.
   3. Provide independent support of raceways installed above fire-rated ceilings. Attachment to ceiling support wires is not permitted.
   4. Install conduit 1 foot-0 inch minimum above top of ceiling.

R. Underground Duct Banks:
   1. Provide underground duct banks as indicated. Provide concrete encasement of power systems duct banks except where duct banks run beneath building slab on grade. Provide concrete encasement of duct bank elbows for all systems. Provide steel reinforcing bars for concrete-encased duct banks. Provide spacers to permit concrete to completely surround and encase each conduit. Concrete strength shall be 3,000 pounds per square inch minimum. Provide red dye inhibiting agent in concrete mix.
   2. Pitch conduit down and away where duct bank enters the building or equipment.

05/03/13 PERMIT SET

3. Support raceways installed in duct banks every five feet to assure correct alignment prior to placing concrete.
4. Terminate raceways with flared end bells. Clear raceway terminations of burrs and rough edges.

S. Conduit connected to rotating or vibrating equipment shall be flexible metal conduit or liquid-tight flexible conduit.

T. Raceways and fittings installed in hazardous (classified) locations shall conform to NEC Article 500 requirements for the associated Class and Division.

U. Exposed conduit shall be installed parallel and at right angles to the building lines.

V. All raceway systems run on the I-beams and vertical columns shall be secured using fasteners, clamps and hangers without drilling holes on the structure.

3.2 MODULAR WIRING SYSTEM

A. Provide distribution boxes where transitions are made from fixed raceways to the modular wiring system. Label distribution junction box with panelboard and circuit numbers.

B. Cable assemblies shall be connected horizontally to multi-purpose connectors. Support cable assemblies at intervals not to exceed 4 feet-6 inches on center or closer if required. Provide dust caps on unused connector faces.

3.3 WIREWAYS AND AUXILIARY GUTTERS

A. Install wireways above suspended ceilings such that cover will hinge upward from side.

B. Provide 12 inches clear from wireway cover when in open position.

3.4 OUTLET, JUNCTION, AND PULL BOXES

A. Provide outlet, junction, and pull boxes as indicated and as required for a complete installation and to facilitate proper pulling of wires and cables. Boxes shall be sized per electrical code as minimum. Plug open knock outs.

B. The exact location of outlets and equipment is governed by field conditions. Where necessary, relocate outlets so that fixtures and equipment are symmetrically located in accordance with the room layout and will not interfere with other work or equipment. Verify final location of outlets, fixtures, and equipment with Engineer.

C. Back-to-back outlets in the same wall, or “through-wall” type boxes are not permitted. Provide 12-inch minimum spacing for outlets shown on opposite side of a common wall. Provide acoustical potting compound (Electrical Box Pads) on outlet boxes installed in condominiums, guest rooms, private offices, conference rooms and in all sound-insulated drywall partitions. Install box pads on the outside of the box and fill all holes.

D. Fit outlet boxes in finished ceilings or wall with appropriate covers, set flush with the finished surface. Where more than one switch or device is located at one point, use multiple gang boxes and covers. Provide tile box or a 4-inch square box with tile ring in masonry walls not plastered or furred. Where drywall material is utilized, provide plaster ring. Provide outlet boxes of type and size suitable for the specific application. Provide barriers where required for voltage or systems separation.

E. Provide pull boxes so that an individual run of conduit does not contain more than the equivalent of four 90-degree bends (360 degrees total).

F. Boxes recessed in walls or ceilings with a surface of concrete, tile, gypsum, plaster, or other non-combustible material shall be installed so that the front edge of the box shall not be set back from the finished surfaces more than 1/4 inch. Boxes recessed in walls and ceiling constructed of wood or other combustible surface material shall be flush with the finished surface.

G. Where boxes are installed in plaster, drywall, or plasterboard surfaces with cut openings for box installation, the cut openings shall be repaired so there shall be no gaps or open spaces greater than 1/8 inch at the edge of the box or fitting.

05/03/13 PERMIT SET

3.5 APPLICATION OF RACEWAYS

A. Rigid Steel Conduit:
   1. Where exposed to physical damage.
   2. Indoors where exposed to moisture.
   3. Where required by code.
   4. Exposed indoor installations within ten feet above finished floor.
   5. Exposed outdoor installations.

B. Electrical Metallic Tubing:
   1. General purpose feeders and branch circuits, except where another conduit type is specifically required.
   2. Exposed indoor installations in branch electrical closets and telecommunications rooms below ten feet above finished floor.

C. Metal Clad Cable:
   1. Use in dry locations concealed above suspended ceilings or within hollow partitions for lighting and receptacle branch circuits (not permitted for circuit home runs).

D. Flexible Steel Conduit:
   1. Dry locations only.
   2. Connections to lighting fixtures in suspended ceilings.
   3. Connections to equipment installed in suspended ceilings.
   4. Transformer connections.
   5. Connections to equipment where vibration isolation is needed.
   6. Maximum length shall be six feet.

E. Liquid-Tight Flexible Steel Conduit:
   1. Same as flexible steel conduit in damp or wet locations.
   2. Motor connections.

F. PVC Coated Rigid Steel Conduit:
   1. Embedded in floor slabs.
   2. Underground duct banks.
   3. Below slab on grade.

G. Modular Wiring System:
   1. Non-emergency lighting system connection in accessible ceiling locations.

H. Wireways and Auxiliary Gutters:
   1. Where indicated.
   2. Above and below panelboards, lighting relay cabinets, fire alarm panels, and terminal cabinets to accommodate large concentrations of wires.

3.6 APPLICATION OF BOXES OUTLET, JUNCTION AND PULL BOXES

A. Cast Type Boxes:
   1. Where connected to rigid steel, intermediate metal, rigid aluminum conduit and liquid-tight flexible conduit, 1.25 inches and smaller.
   2. Exposed conduit installations within ten feet above finished floor.
   3. Where exposed to moisture and outdoors.

B. Galvanized Pressed Steel Type Boxes:
   1. Where connected to electrical metallic tubing and flexible steel conduit, 1.25 inches and smaller.
   2. Dry locations.
   3. Where concealed in walls and above suspended ceilings.

C. Sheet Steel Boxes:
   1. Where connected to conduit larger than 1.25 inches.

END OF SECTION

05/03/13 PERMIT SET

SECTION 260926

PROGRAMMABLE LIGHTING CONTROL SYSTEM

PART 1 - GENERAL

1.1 DESCRIPTION

A. Provide programmable lighting control system in accordance with the Contract Documents.

B. The programmable lighting control system shall be a stand-alone system operating independently of other control systems. The system shall be the distributed processing type, allowing each lighting relay cabinet to function as an independent programmable lighting control system.

1.2 QUALITY ASSURANCE

A. Manufacturer and equipment supplier shall have a minimum of five years prior experience.

B. Components and assemblies shall be factory pre-tested and burned in prior to installation.

C. Factory-trained technicians and applications engineers shall be available to provide initial programming, field testing, system start up, training and operation assistance.

D. Equipment shall be certified for use in the State of California and shall meet the California energy code.

1.3 REFERENCE STANDARDS

A. Lighting Relay Cabinets: UL 916.

B. Emissions Standard: FCC Part 15, Subpart J, Class A.

1.4 SUBMITTALS

A. Manufacturer's product data sheets.

B. Riser diagram showing lighting relay cabinets, control devices, PC interface equipment, and interconnecting conduit and wire.

C. Wiring diagram for each type of control device.

D. Detailed project-specific narrative system sequence of operation.

E. Lighting relay cabinet schedules indicating relay number, system address, branch circuit panelboard and circuit number, control device, and specific description of load controlled.

F. System Title 24 compliance certification documentation: Provide with product submittal for review.

G. Post-installation: Title 24 forms LTG-2-A "Lighting Control Acceptance Document" and LTG-3-A "Automatic Daylighting Controls Acceptance Document". Submit acceptance testing documentation as required for programmable lighting control system.

H. Operating and Maintenance Manual, per Electrical General Provisions specification section.

1.5 FIELD TESTING

A. Wiring shall be inspected and tested for continuity and short circuits.

B. Field Test Reports:
   1. Certification that equipment has been properly installed and programmed and is in satisfactory operating condition.
   2. Detailed operational test report in matrix form indicating each relay and each control device. Report shall certify the following:
      a. Successful operation of each relay.
      b. Successful operation of each control device.
      c. Successful operation of automatic control sequences.
   3. Submit Title 24 forms LTG-2-A and LTG-3-A to show compliance.

1.6 IDENTIFICATION

A. Provide an identification nameplate for each lighting relay cabinet.

05/03/13 PERMIT SET

B. Provide a directory card in each lighting relay cabinet indicating relay number, system address, branch circuit panelboard and circuit number, and specific descriptions of loads controlled.

1.7 OPERATION

A. The lighting relay cabinets shall switch relays ON and OFF in response to commands initiated from control devices, user-defined time of day schedules, and commands from the hand-held controller. Switch input control devices shall be capable of providing ON only, ON/OFF, and ON/OFF with time override (for OFF of a 2- to 999-minute delay should switch be left ON) control actions.

B. Time of day schedules shall be developed within logic circuits of each lighting relay cabinet. Each lighting relay cabinet shall have capacity for nine separate daily schedules, including one holiday schedule. Weekly schedules and twenty holidays shall be developed from combinations of the daily schedules, up to one year in advance. Schedules shall contain provisions for daylight savings time and leap year adjustment.

C. Prior to turning off lights from any time-based command, the lighting relay cabinet shall momentarily “flash” lights signaling occupants to initiate an override command. Time interval before turning off shall be programmable from one to nine minutes or “flash” may be disabled.

D. The hand-held controller shall be used to set operating schedules, review status of any relay, define switch functions, change a relays status (ON or OFF) and perform systems diagnostics. Prompt messages shall be provided at each step on the LCD screen.

E. Off sweep function to line voltage shut-off switches shall open and close relays serving associated branch circuits for the time interval required by the line voltage shut-off switch.

F. Exterior lighting shall automatically turn on in response to exterior photocell and automatically turn off in response to preprogrammed schedule.

1.8 WARRANTY

A. Provide a two-year system warranty.

PART 2 - PRODUCTS

2.1 ACCEPTABLE MANUFACTURERS

A. System: WattStopper, GE TLC, LC&D, Leviton/Macro, or Hubbell Automation.

2.2 LIGHTING RELAY CABINETS

A. General:
   1. Relays and logic circuits shall utilize quick connectors on factory wiring to facilitate replacement.
   2. Logic functions, schedules, and switch definitions shall be protected from loss of power for periods of up to ten years.
   3. Each lighting relay cabinet shall have an RJ11 receptacle for connection of a portable hand-held controller for schedule and switch definition.

B. Enclosure:
   1. NEMA 1, surface wall-mounted steel enclosure, finish coated with ANSI 61 grey enamel over a rust inhibitor.
   2. Enclosure faceplate shall be secured to the enclosure with captive screws. Provide a hinged, locking door for access to the low-voltage compartment.
   3. Low-voltage compartment shall be physically separated from two line voltage wiring areas by steel barriers.

C. Relays:
   1. Provide relays in quantities indicated on the lighting relay cabinet schedules.
   2. Each relay shall have a single set of contacts rated for 20 amps at 120 VAC or 277 VAC, tungsten and ballast rated. Coil shall be 24 volts, mechanically or electrically held.
   3. Each relay shall have an LED indicator to display ON/OFF status of each relay.

05/03/13 PERMIT SET

D. Switch Inputs:
   1. Provide a programmable low-voltage switch input for each relay. Half of the switch inputs shall be two-wire type and half of the switch inputs shall be the universal type.
   2. Two-wire switch inputs shall accommodate two-wire maintained contact (SPST) low-voltage switching devices or two-wire momentary contact (push ON/push OFF) low-voltage switching devices.
   3. Universal switch inputs shall be the same as two-wire switch inputs and in addition shall accommodate three-wire momentary contact low-voltage switching devices.

E. Hand-Held Controller:
   1. 16 key, environmentally sealed keypad.
   2. 4 line, 20 characters per line liquid crystal display.
   3. 6-foot control cord with RJ11 connector.
   4. Magnetic mounting strips on rear.
   5. Provide two hand-held controllers (one as spare).

2.3 CONTROL DEVICES

A. Low-Voltage Wall Switch:
   1. Similar in appearance to lighting switches specified under Section 26 27 26.
   2. Two-wire maintained contact type.
   3. Three-wire momentary contact type where multiple location is indicated.

B. Photocell:
   1. Interior or exterior weatherproof type for automatic ON/OFF control of lighting fixtures in response to ambient lighting levels.
   2. Adjustable time delay and foot-candle level setpoints.
   3. Interior type shall include separate ON and OFF setpoints to prevent control from toggling inadvertently as the sensor passes through the control threshold.

C. Occupancy Sensors:
   1. As specified under Section 26 27 26. Occupancy sensors shall be of the same manufacturer.

PART 3 - EXECUTION

3.1 GENERAL

A. Connect each lighting relay cabinet to the normal power supply.

B. Provide an exterior photocell in suitable location on roof facing north sky.

3.2 INITIAL PROGRAMMING

A. Provide initial programming of system including assignment of relays to low-voltage switching devices and assignment of relays to automatic schedules prior to system start-up and training. Time of day schedules shall be established by the Owner.

3.3 SYSTEM START-UP

A. Provide qualified technicians to confirm proper installation and operation of system components after initial programming and prior to training.

3.4 TRAINING

A. Provide a minimum of three days of on-site training and instruction to the building's operating personnel by qualified application engineers. Include the instructor's cost of travel and subsistence.

3.5 OPERATION ASSISTANCE

A. Factory telephone support shall be available at no cost to the Owner for the duration of the warranty period. Factory assistance shall consist of solving programming or application questions concerning the control equipment. The manufacturer shall be capable of trouble shooting the software aspects of the system from a factory location via modem.

END OF SECTION

05/03/13 PERMIT SET

SECTION 262416

PANELBOARDS

PART 1 - GENERAL

1.1 DESCRIPTION

A. Provide panelboards in accordance with the Contract Documents.

B. Panelboards include both branch panelboards and distribution panels.

1.2 QUALITY ASSURANCE

A. Panelboard interrupting capacities shall be fully rated.

1.3 REFERENCE STANDARDS

A. Panelboards:
   1. NEMA PB-1
   2. Federal Specification W-P-115A Type II, Class 1
   3. UL 50 and 67

B. Circuit Breakers:
   1. NEMA AB-1
   2. Federal Specification W-C-375a and W-C-375b
   3. UL 489

C. Fusible Switches:
   1. Federal Specifications W-S-865c
   2. UL98

1.4 SUBMITTALS

A. General:
   1. Manufacturer's product data sheets, electrical ratings, and installation instructions.
   2. Support locations and types.

B. Branch Panelboards:
   1. Detailed description and layout of each panelboard, showing physical dimensions, circuit breaker ratings and layout, identification nameplate, and cable lugs.

C. Distribution Panels:
   1. Dimensioned layout and elevation drawings showing physical dimensions and housekeeping pads.
   2. Detailed description and layout of each distribution panel, showing overcurrent protection device ratings and layout, identification nameplate, and cable lugs, and fuse clip sizes.

D. Seismic restraint calculations.

1.5 IDENTIFICATION

A. Provide an identification nameplate for each panelboard, each main, and each feeder overcurrent protection device.

B. Provide a typewritten directory card indicating load served by type and location for each branch circuit in each branch panelboard. Mount directory in frame on inside of branch panelboard door.

C. Current ratings of overcurrent protection devices shall be displayed on the device.

PART 2 - PRODUCTS

2.1 ACCEPTABLE MANUFACTURERS

A. Cutler Hammer, General Electric, Siemens, Square D, or equal.

B. Note that equipment layouts are based upon General Electric equipment. If alternate manufacturer is selected, it is the Contractor's responsibility to confirm equipment fits within the spaces provided.

05/03/13 PERMIT SET

2.2 RATINGS

A. Panelboards shall be of the ratings and configurations shown on the Drawings.

B. Panelboards and overcurrent protection devices shall have a minimum short circuit rating as specified herein or greater where indicated on the Drawings.

C. Branch Panelboards:
   1. Branch panelboards are identified as shown on the Drawings.
   2. Maximum allowable physical dimensions: 22 inches wide by 6 inches deep.
   3. Branch panelboards: 10,000 RMS symmetrical amperes minimum interrupting capacity.

2.3 CONSTRUCTION

A. Enclosures shall be corrosion resistant galvanized (zinc finished) sheet steel. Fronts shall be cold rolled steel, finish coated with ANSI 61 gray enamel over a rust inhibitor. Panel locks shall be keyed alike. Recessed flush-mounted panels shall have overlapping front.

B. Doors for branch panelboards shall be one-piece bolt-on front with a lockable hinged door over the overcurrent protection devices.

C. Space for future devices shall include all necessary bus supports, and connections.

2.4 BUS SYSTEM

A. Bus bars shall be sequence phased, rigidly supported by high-impact resistant, insulated supporting bus assemblies to prevent vibration and resulting damage when subjected to stress, vibration, or short circuits. Solderless terminations shall be suitable for either copper or aluminum wire or cable.

B. Bus bars shall be of the ampere rating shown on the Drawings. Bus bars shall be plated aluminum or copper sized in accordance with UL standards to limit temperature rise on any current-carrying part to a maximum of 65 degrees C above an ambient of 40 degrees C maximum.

C. Neutral bus shall be full size. Neutral bus shall be 200 percent rated when supplied from an oversized neutral conductor. Neutral bus shall be capable of terminating one conductor per pole position minimum.

D. Provide a copper equipment ground bus in each panelboard. In addition to the equipment ground bus, provide a copper isolated ground bus when supplied from a feeder that includes an isolated grounding conductor. Each ground bus shall be capable of terminating one conductor per pole position minimum.

2.5 OVERCURRENT PROTECTION DEVICES

A. Overcurrent Protection Device Types:
   1. Branch panelboards: Molded case circuit breakers.

B. Molded Case Circuit Breakers:
   1. Completely sealed enclosure. Toggle type operating handle. Trip ampere rating and ON/OFF indication clearly visible.
   2. Bolt-on type. Plug-in type are not permitted.
   3. Thermal-magnetic trip-free, trip-indicating, quick-make, quick-break, with inverse time characteristic. Single-handle and common tripping on multi-pole breakers. External handle shall be suitable for locking in the OFF position.
   4. Silver alloy contacts with auxiliary arc-quenching devices.
   5. Breakers for lighting circuits shall be SWD rated.
   6. Breakers for mechanical equipment shall be HACR rated.
   7. Provide main breakers in panelboards served from transformers.
   8. Shunt-trip breakers shall be supplied with 120V AC coils.

C. Fusible Switch Units:
   1. Quick-make, quick-break, dead-front type. Each switch shall be a self-contained unit, externally operated from the front.
   2. Defeatable interlock to prevent opening the door when the switch is in the ON position.
   3. Switches shall be equipped with rejection type clips suitable for UL Class R fuses up to 600A, suitable for UL Class L fuses above 600A.

05/03/13 PERMIT SET

4. Handle shall be capable of being padlocked in the OFF position.

PART 3 - EXECUTION

3.1 INSTALLATION

A. Mount panelboards 6 feet above finished floor to top unless otherwise noted.

B. Connect feed-through panels to main feeder by insulated parallel gutter taps (O.Z. Electrical Manufacturing Company Type PMX or PMX-C).

C. Where panelboards are mounted recessed flush in wall, maintain fire integrity of wall. Provide one empty 3/4-inch EMT conduit stubbed up into nearest accessible ceiling location for every three spare or space positions.

D. Neatly arrange wiring and tie together in each gutter with Thomas & Betts nylon Ty-Raps or equal at minimum 4-inch intervals.

E. Provide plugs on open knockouts.

F. Where multiwire branch circuits are allowed, provide identified handle ties in accordance with Code for each grouping of single pole circuit breakers supplying the multiwire branch circuit.

3.2 TOUCH UP AND CLEANING

A. Backboxes shall be clean, dry, and free of construction debris and fireproofing overspray prior to installation of panelboard interior.

B. Vacuum backboxes clean of debris after installation and wiring of branch circuits.

C. Repair and touch up paint damaged surfaces.

END OF SECTION

05/03/13 PERMIT SET

SECTION 262726

WIRING DEVICES

PART 1 - GENERAL

1.1 DESCRIPTION

A. Provide wiring devices in accordance with the Contract Documents.

1.2 QUALITY ASSURANCE

A. Switches, receptacles and wallplates shall be of the same manufacturer.

B. Occupancy sensors shall be certified for operation with specific ballasts utilized in controlled lighting fixtures.

C. Occupancy sensors shall have a minimum three-year warranty.

D. Equipment shall be certified for use in the State of California and shall meet the California Energy Code and local energy ordinances.

E. Coordinate service fittings with electrified furniture system supplier.

F. Floor boxes shall comply with UL scrub water tests for carpet, wood and tile floors.

1.3 REFERENCE STANDARDS

A. Switches: Federal Specification WS-896E.

B. Receptacles: Federal Specification WC-596D, NEMA WD-1, and UL 498.

C. Ground Fault Circuit Interrupter Receptacles: UL 943 Class A.

D. Wall Dimmers: ANSI C62.41, UL 20.

E. Electrified furniture system supplier's requirements.

1.4 SUBMITTALS

A. Manufacturer's product data sheets.

B. Occupancy sensor layout drawings, 1/16-inch scale, including interwiring of switchpacks and control devices.

C. Occupancy sensor Title 24 2005 compliance certification documentation; provide with product submittals for review.

D. Post-installation: Title 24 forms LTG-2-A "Lighting Control Acceptance Document" and LTG-3-A "Automatic Daylighting Controls Acceptance Document". Submit acceptance testing documentation as required for occupancy sensors and manual daylight controls.

E. Submit samples as requested by Engineer of coverplates and devices for color selection.

1.5 FIELD TESTING

A. Lighting Controls Acceptance Testing: Provide acceptance testing for all occupancy sensors and daylight reduction switches as required for completion of Title 24 forms LTG-2-A and LTG-3-A.

1.6 COLORS

A. Device and coverplate colors shall be as selected by Engineer. Catalog numbers, where included in this Specification, are not to be used to determine colors of devices and coverplates.

PART 2 - PRODUCTS

2.1 ACCEPTABLE MANUFACTURERS

A. Catalog numbers shall not be used to determine colors of devices and coverplates. Catalog numbers are used to establish minimum acceptable standard.

B. Switches and Receptacles: Cooper, Hubbell, Leviton, or Pass & Seymour.

C. Wall Dimmers: Leviton or Lutron.

05/03/13 PERMIT SET

D. Occupancy Sensors: Hubbell Automation/Mytech, Leviton, Novitas, or Watt Stopper.

E. Floor Boxes and Fittings:
   1. Poke through type: Walker/Wiremold or Hubbell
   2. Recessed flush floor box type: Hubbell, Steel City, or Walker/Wiremold

F. Plugstrip and Surface Raceways: Wiremold or Hubbell.

2.2 SWITCHES

A. General:
   1. Switches shall be of the type indicated on the Drawings.
   2. Switches shall be commercial specification grade, 20A, 120/277V, 1HP rated at 120V, 2HP rated at 240V, back- and side-wired, silent handle operation.

B. Lighting Switches:
   1. Rocker handle type:
      a. Single pole: Leviton Decora 5621-2; Hubbell HBL2121; Cooper 7621
      b. Double pole: Leviton Decora 5622-2; Hubbell HBL2122; Cooper 7622
      c. 3 way: Leviton Decora 5623-2; Hubbell HBL2123; Cooper 7623
      d. 4 way: Leviton Decora 5624-2; Hubbell HBL2124; Cooper 7624

C. Illuminated Handle Switches:
   1. Rocker handle type:
      a. Single pole: Leviton Decora 5631; Hubbell HBL2121-IL; Cooper 7631
      b. 3 way: Leviton Decora 5633; Hubbell HBL2123-IL; Cooper 7633

D. Transfer Fan Switches:
   1. Rocker handle type, single pole: Leviton Decora 5601-2 engraved FAN, or equivalent by Cooper, Hubbell, or Pass & Seymour.

E. Pilot Light Switches:
   1. Toggle handle, single pole, neon pilot light: Leviton 5226; Hubbell HBL1221-PL; Cooper 2221-PL

F. Key Switches:
   1. Single pole: Leviton 1221-2L; Hubbell 1221-L; Cooper 2221L

G. Weatherproof Switches:
   1. Weatherproof handle/coverplate.

H. Electronic or Digital Timer Switches:
   1. Five button time interval: 5, 10, 15 and 30 minutes plus OFF button.
   2. Ratings:
      a. 1000W, 120VAC, incandescent
      b. 20A, 120VAC, inductive
      c. 1HP, 120VAC, motor
   3. Hubbell DT1277W series or Leviton Decora 6230M series.

2.3 RECEPTACLES

A. General:
   1. Receptacles shall be of the type indicated on the Drawings.
   2. Receptacles shall be commercial specification grade, 125V, grounding type, back- and side-wired.
   3. Receptacles shall have a single piece, heavy duty brass ground contact and mounting strap.
   4. Receptacles shall have a nylon face and heat resistant base.

B. Receptacles:
   1. Designer style single, 15A: Leviton Decora 16251; Hubbell RRD151; Cooper 6350
   2. Designer style duplex, 15A: Leviton Decora 16252; Hubbell HBL2152; Cooper 6262
   3. Designer style duplex, 20A: Leviton Decora 16352; Hubbell HBL2162; Cooper 6362

C. Isolated Ground Receptacles:
   1. Single, 15A: Leviton 5261-IG; Hubbell IG5261; Cooper IG5261
   2. Duplex, 15A: Leviton 5262-IG; Hubbell IG5252; Cooper IG5262

05/03/13 PERMIT SET

3. Duplex, 20A: Leviton 5362-IG; Hubbell IG5352; Cooper IG5362
4. Designer style duplex, 15A: Leviton Decora 16252-IG; Hubbell IG2152; Cooper IG8262RN
5. Designer style duplex, 20A: Leviton Decora 16352-IG Hubbell IG2162; Cooper IG8362RN

D. Ground Fault Circuit Interrupter Receptacles:
1. Duplex, 15A: Leviton 8598; Hubbell LED GFR 5252; Cooper VGF15
2. Duplex, 20A: Leviton 8898-HG; Hubbell LED GFR 5352; Cooper VGF20

E. Special Purpose Receptacles: Rating as indicated on the Drawings.

F. Clock Receptacles:
1. Simplex, 15A: Leviton 5261-CH; Hubbell 5235; Cooper 775

G. Weatherproof Receptacles:
1. Duplex, weatherproof while-in-use rated coverplate with hinged door.
2. All 15- and 20-ampere, 125- and 250-volt non-locking receptacles located in damp or wet locations shall be a listed weather-resistant type. Listed devices shall bear a “WR” marking on the face that is visible when installed.

H. Power Connection to Electrified Furniture System:
1. Single gang stainless steel coverplate with factory-cut hole suitable for connection or electrified furniture system wiring whip.

2.4 WALL DIMMERS

A. Wall dimmers shall be suitable for control of the load type (incandescent, low-voltage magnetic, low-voltage electronic, solid state, or fluorescent), load capacity, and branch circuit voltage of the lighting fixtures controlled.

B. The Contractor is responsible for coordinating loads, load types, and ganging of wall dimmers.

C. Provide power interface modules for dimmers where required to serve load types and magnitudes per the Drawings.

D. Dimmers shall be ganged with adjacent switches to allow for a multi-gang coverplate where multiple devices are installed in a common wall. Where ganged, Contractor shall ensure the de-rated dimmer (where heat fins are removed) is suitable for the load controlled.

E. Preset type, rocker handle style on/off switch with captive dimming slider, power failure memory, front-accessible service switch; Lutron Diva series.

F. Dimmers shall incorporate solid state Triac dimming rated for a minimum of 150 percent of the control’s capacity.

G. Dimmers shall incorporate surge protection to withstand surges of 6000V, 200A meeting ANSI/IEEE std. C62.41-1980.

H. Dimmers shall include voltage compensation to stabilize light output from variations in the AC line-voltage. Dimmers in which the light output is not held constant with varying AC line-voltage shall not be acceptable.

I. Dimmers shall utilize a large toroidal choke to minimize radio frequency interference. Dimmers shall not be susceptible to damage due to 16kV static discharges.

J. Dimmer slide position shall indicate perceived light level, using the square law power curve in the IESNA Lighting Handbook, 9th edition. Dimmers shall provide smooth and continuously variable control of light intensity.

K. Three-way dimmers shall be capable of operating in either 3-way switch location.

L. Plastic parts shall not fade or yellow with prolonged exposure to sunlight. Visible parts shall exhibit ultraviolet stability as defined in ASTM D4674-89.

2.5 OCCUPANCY SENSORS

A. Occupancy sensors shall be suitable for control of the load type (incandescent, low voltage, or fluorescent), load capacity, and branch circuit voltage of the lighting fixtures controlled.

B. Ceiling-mounted devices shall be dual-technology type with self-adjusting time delay and sensitivity. Wall switch devices shall be passive infrared.

C. Wall Switch:

1. Manual ON, auto OFF control switches.
2. Single level control switch or matching dual-level switching type as indicated on the Drawings.
3. Bypass override ON switch in the event of product failure.
4. 120/277V operation.
5. Provide sensors appropriate for the room size coverage
6. Hubbell/Mytech WSI 1200 series, Novitas Model 01-400 series, or Watt Stopper WA-200 series.

D. Ceiling Mounted:
1. One-way type: Hubbell/Mytech CAD-1000 series, Novitas Model 01-100 series, or Watt Stopper DT-200 series.
2. Two-way types: Hubbell/Mytech CAD-2000 series, Novitas Model 01-310 series, or Watt Stopper DT-300 series.
3. Corridor type: Mytech ONMI-US 2000, Novitas Model 01-180 (one way) and 01-190 (two way) series.

E. Switchpacks:
1. Provide switchpacks as required for circuiting and control as shown on the Drawings.
2. 120/277V operation.
3. Hubbell/Mytech UPI, Novitas Model 13-051, or Watt Stopper BZ-100.

2.6 FLOOR BOXES AND FITTINGS

A. General:
1. Provide floor boxes and fittings of the types, ratings, and configurations as shown on the Drawings.
2. Floor boxes and fittings shall be suitable for the fire rating and thickness of the floor.
3. Combination power/telecom outlets shall have barrier to separate power and telecom wiring.

B. Recessed Flush Type Floor Box:
1. Cast iron box, multiple gang, 2-inch shallow depth, brushed aluminum tile flange and coverplates.
2. Combination duplex receptacle/telecom outlet, 125V, 15A: Walker/Wiremold 880CM2-1 floor box, 828TCAL combination carpet and tile flange, and 828R-TCAL power coverplate and 828GFITCAL telecom coverplate.

2.7 PLUGSTRIP AND SURFACE RACEWAYS

A. Provide plugstrip and surface-mounted raceway system in lengths shown and suitable for the branch circuiting shown on the Drawings.

B. Plugstrip shall be grounding type, painted color as selected by Engineer. Provide isolated ground type plugstrip where served by an isolated grounding conductor.

C. All surface telecom raceways shall have full capacity corner elbows to accept fiber cable installations.

D. Power type:
1. Single-compartment surface metal raceway with removable cover.
2. Single receptacle outlets mounted on 12-inch centers.
3. Wiremold 2000 series, or Hubbell 2000 series.

E. Power/Telecom type:
1. Two-compartment surface metal raceway with internal divider and removable cover.
2. Duplex receptacle outlets and telecom fittings mounted on 12-inch centers.
3. Wiremold V-4000 series or Hubbell 4000 IV series, with combination type covers.

2.8 COVERPLATES

A. Provide coverplates for wiring devices. Provide multiple gang coverplates where multiple devices are installed in a common location.

B. Provide stainless steel, smooth-face coverplates in equipment rooms. Provide nylon thermoplastic, smooth-face coverplates in other areas. Thermoset coverplates are not acceptable.

05/03/13 PERMIT SET

2.9 MISCELLANEOUS DEVICES

A. Pushbutton: Glowing button, Leviton 9702.

B. Buzzer: Leviton 602; provide transformer.

C. Bell: Leviton 601; provide transformer.

PART 3 - EXECUTION

3.1 GENERAL

A. General:
1. Verify the exact location of wiring devices with Engineer.
2. Devices mounted above counters shall be two inches above the top of the backsplash to the bottom of the coverplate.
3. Provide a number 12 grounding conductor from the device grounding terminal to the panelboard ground bus. Bond wiring device to the outlet box.
4. Connect electrified furniture system wiring whip to furniture feed power outlet. Provide approved handle ties for circuit breakers feeding multiwire branch circuits as required for disconnecting means.
5. Receptacles mounted in boxes shall be installed so that the mounting yoke or strap of the receptacle is held rigidly against the surface of the wall. Drywall or plaster surfaces shall be repaired so there are no gaps greater than 1/8 inch from the edge of the box or fitting.
6. Receptacle faces shall project a minimum of 0.015 inches [0.4 millimeters] from the faceplate. Faceplates shall be installed so as to completely cover the opening and seat against the mounting surface.

B. Switches:
1. Mount switches vertically with the ON position on top.
2. Mount switches on the strike side of doors.
3. Provide rocker handle type lighting switches in all areas.

C. Receptacles:
1. Mount receptacles vertically with the grounding pin on bottom.
2. Provide designer style type duplex receptacles to match rocker handle type lighting switches in all areas.

D. Occupancy Sensors:
1. It shall be the Contractor's responsibility to locate and aim sensor(s) in the correct location required for complete and proper volumetric coverage within the range of coverage(s) of controlled areas per the manufacturer's recommendations, as the range of coverage of occupancy sensors may vary from one manufacturer to another.
2. Rooms shall have 90 to 100 percent coverage to completely cover the controlled area to accommodate all occupancy habits of single or multiple occupants at any location within the room(s). The locations and quantities of sensors shown on the Drawings are diagrammatic and indicate only the rooms which are to be provided with sensors. The Contractor shall provide additional sensors if required to properly and completely cover the respective room. Where two or more occupancy sensors are indicated within a room or space, they shall be arranged so that the coverage overlaps an adjacent sensor’s coverage by not less than 25 percent.
3. It is the Contractor’s responsibility to arrange a pre-installation meeting with the manufacturer's factory-authorized representative, at the Owner's facility, to verify placement of sensors and installation criteria.
4. Proper judgment must be exercised in executing the installation so as to ensure the best possible installation in the available space and to overcome local difficulties due to space limitations or interference of structural components.
5. Face plate color to be selected by Engineer. Submit samples of standard colors to Engineer for review.
6. Provide switchpacks as required for multiple sensor locations and multiple control circuits.
7. Provide override switch at wall for ceiling-mounted occupancy sensor locations.

E. Floor boxes and fittings:

05/03/13 PERMIT SET

1. Floor box cover plates shall be recessed completely flush in finished concrete floor. Contractor shall fill in concrete up to edge of floor box cover flange to create a uniform, completely flat surface.

F. Plugstrip:
1. Provide a 1-inch empty conduit home run to the nearest telecommunications terminal board for each 12 linear feet of telecommunications plugstrip.

G. Coverplates:
1. Install device plates in full contact with wall surface. Plates shall not project out from the wall.
2. Coverplates for multiple gang wall dimmers shall be continuous flush type tailored to match wall dimmer physical dimensions.

3.2 CONTROL DEVICE COMMISSIONING

A. Upon completion of the installation, all control systems and devices shall be commissioned. Occupancy sensors shall be completely commissioned by the manufacturer's factory-authorized technician who will verify all adjustments and sensor placement to ensure a trouble-free occupancy-based lighting control system.

B. The electrical contractor shall provide both the manufacturer and the electrical engineer with ten working days' written notice of the scheduled commissioning date.

C. Upon completion of the controls system fine-tuning, the factory-authorized technician shall provide the training necessary to familiarize the Owner's personnel with the operation, use, adjustment, and problem-solving diagnosis of the occupancy sensing devices and systems.

END OF SECTION

SECTION 262813

600V FUSES

PART 1 - GENERAL

1.1 DESCRIPTION

A. Provide 600V fuses in accordance with the Contract Documents.

1.2 QUALITY ASSURANCE

A. All fuses shall be of the same manufacturer.

1.3 REFERENCE STANDARDS

A. UL 198 and 977.

1.4 SUBMITTALS

A. No requirements.

PART 2 - PRODUCTS

2.1 ACCEPTABLE MANUFACTURERS

A. Bussmann or Littlefuse.

2.2 FUSES

A. 601 amperes through 6000 amperes:
   1. UL Class L.
   2. 200,000 RMS-symmetrical amperes interrupting rating.
   3. Bussmann KRP-C or Littlefuse KLP-C.

B. 600 amperes and below:
   1. UL Class RK1.
   2. 200,000 RMS-symmetrical amperes interrupting rating.
   3. Bussmann LPN-RK (250V) or LPS-RK (600V); or Littlefuse LLN-RK (250V) or LLS-RK (600V).

2.3 SPARE FUSES

A. Provide 10 percent (minimum of 3) spare power and control fuses of each type and rating utilized.

B. Provide spare fuse cabinets in the main switchgear room and rooms with equipment utilizing 15 or more fuses.

PART 3 - EXECUTION

3.1 GENERAL

A. Fuses shall not be installed until equipment is ready to be energized.

END OF SECTION

05/03/13 PERMIT SET

SECTION 262816

DISCONNECT SWITCHES AND INDIVIDUAL MOTOR CONTROLLERS

PART 1 - GENERAL

1.1 DESCRIPTION

A. Provide disconnect switches and individual motor controllers in accordance with the Contract Documents.

1.2 QUALITY ASSURANCE

A. Disconnects and individual motor controllers shall be of the same manufacturer as the switchboards.

1.3 REFERENCE STANDARDS

A. Disconnect Switches:
   1. Federal Specification W-S-865C
   2. NEMA KS1
   3. UL 98 (File #4776) and 508

B. Individual Motor Controllers:
   1. NEMA ICS 2-321
   2. UL 547, 845 and 1004

1.4 SUBMITTALS

A. No requirements.

1.5 FIELD TESTING

A. Test each individual motor controller and verify proper operation.

B. Test motors under load and verify proper rotation.

1.6 IDENTIFICATION

A. Provide an identification nameplate for each disconnect switch and individual motor controller.

PART 2 - PRODUCTS

2.1 ACCEPTABLE MANUFACTURERS

A. Cutler Hammer, General Electric, Siemens, or Square D.

2.2 DISCONNECT SWITCHES

A. Heavy duty, horsepower rated, quick-make, quick-break, dead-front type. Self-contained unit in a NEMA 1 gasketed enclosure (NEMA 3R where installed outdoors), externally operable from the front.

B. Defeatable interlock to prevent opening the door when the switch is in the ON position. Handle shall be capable of being padlocked in the OFF position.

C. Fusible switches shall be equipped with rejecting type clips suitable for UL Class R fuses up to 600A, suitable for UL Class L fuses above 600A. Interrupting rating shall be 200,000 RMS-symmetrical amperes.

D. Voltage, ampacity, horsepower rating, and number of poles shall be appropriate for system and load served. Provide neutral pad for circuits with neutral conductors. Provide ground lug.

E. Provide 6-pole switches for connection to motors requiring 6-motor leads.

2.3 THERMAL OVERLOAD/DISCONNECT SWITCH

A. Single-phase manual motor starter with quick-make, quick-break toggle mechanism and field-adjustable overload heater element.

B. Manual motor starters shall be sized for the motors served.

2.4 INDIVIDUAL MOTOR CONTROLLER

A. Self-contained unit in a NEMA 1 gasketed enclosure (NEMA 3R where installed outdoors), externally operable from the front.

B. Provide full voltage non-reversing (FVNR) type combination magnetic starters for motors of 1/2 HP to 60 HP.

C. Provide reduced voltage, non-reversing, auto-transformer type combination magnetic starters for motors 75 HP and larger.
   1. Two-winding, open delta connected type.
   2. Adjustable timing relay for start-to-run transfer timing.
   3. Closed transition from reduced to full voltage.
   4. Field-adjustable auto-transformer taps: 50 percent, 65 percent and 80 percent. Factory-set at 80 percent.

D. Fusible switch type disconnect with clips for UL Class R type fuses.

E. Provide an individual control power transformer with two primary and one secondary control fuses for each motor controller. The other secondary lead shall be grounded. Secondary voltage shall be 120V AC.

F. Provide each motor controller with three phase, ambient temperature compensating, thermal overload relays with heaters. Overload relays shall be adjustable from 90 percent to 110 percent of heater rating, factory-set at 100 percent. Provide an insulated pushbutton on the outside of door to reset overload relays.

G. Provide each motor controller with a Hand-Off-Automatic (HOA) selector switch. Provide a Hand-Automatic (HA) selector for life safety equipment. Mount switch on outside of door.

H. Provide each motor controller with two normally open and two normally closed auxiliary contacts, green OFF and red RUNNING long life (50,000 hours) pilot indicators on outside of door, auxiliary relays, and other devices required for operation of the equipment to be controlled.

PART 3 - EXECUTION

3.1 GENERAL

A. Disconnect switches and individual motor controller shall be installed within ten feet of load served and installed within sight of the motor.

B. Provide independent support; do not mount on the housing of the equipment served.

C. Conduit connected between disconnect switch or individual motor controller and load served shall be liquid-tight flexible metal conduit, 24 inches minimum length, 36 inches maximum length.

D. Each disconnect switch serving smoke control system air handling equipment shall be provided with an integral, internal auxiliary switch which shall be connected to the Fire Management System for status indication of the OPEN/CLOSED status of the disconnect switch.

END OF SECTION

SECTION 265000

LUMINAIRES AND ACCESSORIES

PART 1 - GENERAL

1.1 DESCRIPTION

A. Provide luminaires and accessories in accordance with the Contract Documents.

1.2 QUALITY ASSURANCE

A. Lamps shall be of the same manufacturer.

B. Ballasts shall be of the same manufacturer for each lamp type.

C. Occupancy sensors shall be certified for operation with specific ballasts utilized in controlled lighting fixtures.

D. Equipment shall be certified for use in the State of California and shall meet the California Energy Code and local energy ordinances.

1.3 REFERENCE STANDARDS

A. Ballasts: ANSI C82.2 and C82.11, FCC CFR 47 Part 18, Public Law 100-357, and UL 935 and 1029.

B. Cords: UL 62.

C. Exit Signs and Emergency Luminaires: NFPA 70, and UL 101 and 924.

D. Hazardous Locations: UL 506, 844, 1203, and 1225.

E. Lamp Holders and Starters: UL 496, 542 and 879.

F. Luminaires: UL 57, 676, 1570, 1571 and 1572.

G. Metal Halide and Mercury Vapor Lamps: Federal Standard 21 CFR 1040.30.

H. Photometric data: Independent testing laboratory certified.

I. State Energy Regulations.

1.4 SUBMITTALS

A. Manufacturer's product data sheets for each luminaire indicating luminaire type, ballast quantity and type, lamp quantity and type, photometric data, materials, finishes, accessories, voltage, input watts, CFM data, and photographic image of luminaire.

B. Manufacturer's data sheets for each ballast including ballast type, power factor, input voltage, input watts, and ballast factor.

C. Scaled and dimensioned detail plan and elevation drawings of custom and continuous row type luminaires.

D. Seismic restraint calculations.

PART 2 - PRODUCTS

2.1 ACCEPTABLE MANUFACTURERS

A. Lighting Luminaires: Refer to luminaire schedule on the Drawings, and Specification Section 26 50 00.

B. Ballasts:
   1. Fluorescent hybrid or magnetic type: Advance, Jefferson, or MagneTek.
   2. Fluorescent high frequency electronic type: Advance, Energy Savings Inc., MagneTek, Motorola, or Osram/Sylvania.
   3. Fluorescent dimming type for daylighting applications (100 percent or 10 percent range): Advance Mark VII, Lutron Eco-10, or Motorola Helios.
   4. Fluorescent dimming type for non-daylighting applications (100 percent to 5 percent range): Advance Mark X, or Lutron Hi-Lume.

05/03/13 PERMIT SET

5. HID magnetic type: Advance, Robertson, or MagneTek.
6. HID electronic type: WPI Electronics, Inc.

C. Lamps: General Electric, Osram/Sylvania, Philips, or Venture Lighting.

D. Emergency Battery Packs: Dual-Lite UFO-2E, UFO-5, or UFO-6 for linear fluorescent lamps, or Sure-Lites FBP Series with minimum 600 lumens output for linear fluorescent lamps and RBP Series for compact fluorescent lamps (minimum of 95 percent of compact fluorescent lamp rating).

2.2 LAMPS

A. Provide a complete set of new lamps in each luminaire.

B. Lamps shall be as follows unless otherwise noted on the luminaire schedule on the Drawings:
1. Linear fluorescent: T5 or T8, 830, energy savings type.
2. Twin tube, double twin tube, or triple twin tube fluorescent: 830.
3. Long compact fluorescent (Biax): 830.
4. Incandescent: 130V, inside frosted.
5. Metal halide: Minimum 75 CRI, open fixture rated 3000K color temperature for up to 150W lamps. Minimum 65 CRI for lamps 175W and higher.
6. High pressure sodium: Deluxe color, minimum 65 CRI.

2.3 BALLASTS

A. General:
1. Ballasts shall be suitable for the electrical characteristics of the supply circuits to which they are to be connected, and which are suitable for operating the specified lamps.
2. Provide electronic ballasts wherever there is an electronic ballast available for any specified lamp or combination of lamps. Where electronic ballasts are not available, provide hybrid or magnetic ballasts.
3. Where installed outdoors and wherever ballasts are installed in a non-heated environment (such as walk-in freezers, cold food handling areas, or outside air plenums), ballasts shall be capable of lamp starting at ambient temperatures down to minimum 20 degrees F.
4. Luminaires controlled by dimmers shall be provided with dimming type ballasts.
5. Single-lamp ballasts for long fluorescent lamps shall be kept to a minimum, and shall only be used for the last odd lamp in a room or space.

B. Fluorescent:
1. Hybrid or Magnetic Ballasts:
   a. Ballasts shall be energy saving type, super low heat, rapid start, high power factor (90 percent minimum), Class A sound rated, UL Class P thermal protection, 0.88 minimum ballast factor, full light output with specified lamps, CBM/ETL certified, and minimum two-year warranty.
2. High Frequency Electronic Ballasts:
   a. High frequency electronic type operating lamps at a frequency of 20kHz or higher with no detectable lamp flicker.
   b. Provide instant start type ballasts for T-8, T-5, T-4 and T-2 lamps. Provide rapid start type ballasts for T12 and compact fluorescent lamps.
   c. Ballast factor shall be 0.88 minimum unless noted to be low output or high output on the Luminaire schedule. Low output type ballasts shall have a ballast factor between 0.75 and 0.78. High output type ballasts shall have a ballast factor between 1.10 and 1.20. Maximum ballast factor for any type ballast shall not exceed 1.20.
   d. Ballasts shall meet or exceed FCC Regulations Part 18 and NEMA standards regarding electromagnetic and radio frequency interference and shall not interfere with operation of other electrical equipment.
   e. Ballasts shall meet or exceed ANSI C62.41, Category A and IEEE 587 standards regarding harmonic distortion and surge protection.
   f. Ballasts shall not be affected by lamp failure and shall yield normal lamp life. Ballasts shall maintain light output at 10 percent for line voltage fluctuations of 10 percent.
   g. Ballasts for compact fluorescent, T-5, T-4 and T-2 lamps shall contain end of lamp life sensing and provide shut-down protection.

05/03/13 PERMIT SET

h. Lamp current crest factor shall not exceed 1.7.
i. Total harmonic distortion shall be less than 20 percent.
j. Minimum three-year warranty.

3. Interwiring for long fluorescent lamps.
   a. Ballast wiring for single-lamp continuous row luminaires shall allow independent control of each continuous row of luminaires. Provide as many three-lamp ballasts as possible; provide two-lamp ballasts to finish a row.
   b. Ballast wiring for double-lamp continuous row luminaires shall allow independent multiple level control of each row of lamps within each continuous row of luminaires (side lamp/side lamps). Provide as many three-lamp ballasts as possible; provide two-lamp ballasts to finish a row.
   c. Ballast wiring for one-lamp luminaires shall allow independent control of two adjacent fixtures. Provide 1 two-lamp ballast and interwiring between each pair of luminaires.
   d. Where single level control of two-lamp luminaires is shown, ballast wiring shall allow independent control of each fixtures. Provide 1 two-lamp ballast per luminaire.
   e. Where multiple level control of two-lamp luminaires is shown, ballast wiring shall allow independent multiple level control of two adjacent fixtures (side lamps/side lamps). Provide 2 two-lamp ballasts and interwiring between each pair of luminaires.
   f. Ballast wiring for three-lamp luminaires shall allow independent multiple level control of two adjacent fixtures (outside lamps/inside lamps). Provide 3 two-lamp ballasts and interwiring between each pair of luminaires.
   g. Ballast wiring for four-lamp luminaires shall allow independent multiple level control of each fixture (outside lamps/inside lamps). Provide 2 two-lamp ballasts per luminaire.

C. High Intensity Discharge:
   1. Magnetic Type:
      a. Constant wattage auto-transformer type, regulated, with integral thermal protection and primary circuit fuse. Ballast shall allow maximum of plus or minus 5 percent lamp voltage change with a line voltage variant of plus or minus 10 percent voltage.
      b. Ballast for HID lamps 150W or less shall be lag type reactance, auto-transformer, high power factor type (90 percent minimum).
   2. Electronic Type:
      a. High power factor (90 percent minimum), Class A sound rated, UL Class P thermal protection with auto reset, ANSI C62.41 and FCC Part 18C, Class A compliance, CBM/ETL certified, and minimum two-year warranty.

2.4 MATERIALS AND FABRICATION

A. Luminaires shall be completely factory-assembled and -wired, and equipped with necessary lampholders, ballasts, wiring, shielding, reflectors, channels, lenses, and other parts necessary to complete the luminaire installation.

B. Luminaire hardware shall be concealed. Weld exposed metal at joints, fill with weld material, grind smooth, and make free from light leaks. Gasket incandescent luminaires with overlapping trim. Weld ballast support studs, socket saddle studs, and reflector support studs to luminaire body; self-threading screws are not acceptable. Ventilate ballast compartments and firmly secure ballast to conducting metal surface. Luminaires shall be designed for bottom relamping, unless otherwise noted.

C. Construct luminaires with a minimum number of joints. Unexposed joints shall be welded, screwed or bolted; soldered joints are not acceptable. Do not use self-tapping methods or rivets for fastening removable parts used to gain access to electrical components requiring service or replacement, or for fastening electrical components or their supports.

D. Cast or extruded parts of luminaires shall be close grained and free from imperfections or discolorations, rigid, true to pattern, of ample weight and thickness, and properly fitted, filed, ground, and buffed to provide finished surfaces and joints free of imperfections.

E. Housings for fluorescent and HID luminaires shall be designed to make electrical components easily accessible and replaceable, without removing the luminaire body from its mounting.

2.5 FINISHES

A. Luminaire finishes shall provide a durable, wear-resistant surface. Surfaces shall be chemically cleaned and treated with corrosion-inhibiting (phosphating) material to assure positive paint adhesion. Exposed metal surfaces (brass, bronze, aluminum, etc.) and finished castings (except chromium plated or stainless steel parts) shall have an even coat of high grade methacrylate lacquer or transparent epoxy. Anodize exposed aluminum surfaces in a 20-minute bath for corrosion resistance. Sheet steel luminaire housings, and iron and steel parts which have not received phosphating treatment, or which are to be utilized in exterior applications, shall be zinc- or cadmium-plated, or hot-dip zinc galvanized after completion of all forming, welding, and drilling operations.

B. Screws, bolts, nuts, and other fastening or latching hardware shall be cadmium plated.

C. Provide luminaires with a high temperature baked enamel coating of selected color and finish, unless otherwise noted. White baked enamel finished surfaces shall have a minimum reflectance of 86 percent, unless otherwise noted.

2.6 REFLECTORS

A. Aluminum Reflectors:
   1. Reflectors and reflecting cones or baffles shall be fabricated from #12 aluminum reflector sheet, minimum 0.057 inches thick (15 gauge). Material shall be free of tooling marks, spinning lines, and marks or indentation caused by riveting or other assembly techniques. No rivets, springs, or other hardware shall be visible after installation.
   2. Reflectors and baffles shall be polished, buffed, and anodized (Alzak), with finish color as selected by the Engineer.
   3. Luminaires provided with tri-phosphor type lamps shall be provided with low iridescence aluminum reflectors to eliminate rainbow effect on aluminum reflector.

B. Painted Reflectors:
   1. Painted reflectors shall be formed before application of primer and paint. Reflectors and reflector bodies for luminaires with baked white enamel finish shall meet the following requirements and tests:
      a. After 100 hours of exposure to fade-o-meter, reflectance shall be not less than 86 percent, and finish shall show no visible color change.
      b. After 100 hours of exposure to 100 percent humidity at 100 degrees F, (cook box test) finish shall show no blistering or other degraded effects.
      c. After 150 hours of exposure to salt spray (20 percent sodium chloride) shall cause no breakdown of film.

2.7 LENSES, FACEPLATES AND TRIMS

A. Plastic lenses shall be of virgin methyl methacrylate, unless otherwise indicated. Polystyrene lenses are not acceptable.

B. Lenses, louvers, and other light diffusing components shall be contained in frames. Lenses shall be removable but positively held within the frames so that hinging or other motion of the frame will not cause the diffusing components to drop out.

C. Faceplates on incandescent recessed luminaires shall open for access to the interior of the luminaire, serve as a ceiling trim, and positively held to the luminaire body by adjustable means that permit the faceplate to be drawn up to the ceiling as tight as necessary to insure complete contact of faceplate with the finished ceiling.

D. Provide ceiling trims for rectangular recessed luminaires with mitered corners, continuously welded and smoothed before shop finishing. Lapping of trim metal is not acceptable.

2.8 LUMINAIRE WIRING

A. Provide wiring between fluorescent and HID lampholders and ballasts of same or heavier gauge than the leads furnished with the ballasts, and having same or higher insulating and heat-resisting characteristics. Internal wiring of luminaires shall contain a minimum number of splices. Splices shall be made with suitable mechanical insulated steel spring type connectors.

05/03/13 PERMIT SET

B. Wiring channels and wireways shall be free from projections and rough or sharp edges. Provide bushings at points or edges over which conductors pass.

2.9 LAMPHOLDERS

A. Incandescent and HID lampholders shall be porcelain bases with copper screw shells.

B. Fluorescent lampholders shall be white, heat-resistant plastic. Fluorescent lampholders operating with an open circuit voltage in excess of 300 volts shall be of the safety type which opens the supply circuit when the lamp is removed from the socket.

C. Rigidly and securely attach lampholders to the luminaire enclosure or husk.

D. Pull chains shall be insulated joint type.

E. Provide lampholders suitable for specified lamps, and set to position the lamps in optically correct spacing and relationship to lenses, reflectors, filters, and baffles.

F. Where fluorescent lamps are installed in unenclosed luminaires, provide a minimum of two lamp-retaining clips per lamp.

2.10 EXTERIOR LUMINAIRES

A. Exterior luminaires shall be designed and manufactured specifically for outdoor service. Components including nuts, bolts, rivets, springs, and similar parts, shall be corrosion resistant.

B. Exterior luminaires shall be suitably and effectively gasketed to prevent entrance of moisture into luminaire. Luminaires which are directly exposed to the elements shall be labeled for wet locations. Luminaires which are exposed to dampness shall be labeled for damp locations.

C. Metal parts of luminaires requiring painting shall be painted with suitable weather and moisture-resisting paint equal to epoxy-based coatings.

D. Aluminum parts of exterior luminaires which are not specified as requiring a painted finish shall be anodized.

2.11 ACCESSORIES

A. Recessed incandescent luminaires shall be furnished with thermal protection in accordance with Article 410-65 of the NEC.

B. Where utilized as raceways, luminaires shall be suitable for use as raceways. Provide feed through splice boxes where necessary.

C. Provide installation and supporting hardware including stems, plates, plaster frames, hangers, and similar items, for support of luminaires for the ceiling construction in which they shall be installed. Provide plaster frames made of non-ferrous metal, or of steel that has been suitably rust-proofed after fabrication.

D. Air handling luminaires shall have hinged air control vanes within the side slots (bent metal vanes are not acceptable) factory-set at fully open. Provide heat removal slots at luminaire ends.

E. Interior fluorescent and HID luminaires utilizing ballast sound rating of lower than A shall be provided with acoustical mounting pads between luminaire housing and ballast to minimize vibration and noise level.

F. Provide tempered glass lenses for metal halide luminaires.

G. Provide fastening devices of a positive locking type, which do not require special tools to apply or remove them. Do not use tie wires in place of fastening devices.

H. Attach reflectors to housing by means of safety chains to prevent reflectors from falling. No part of the chain shall be visible after installation.

I. Provide a ceiling canopy for each stem. Canopy finish shall match stem finish.

J. Luminaires installed in air plenums shall be enclosed and gasketed.

K. Provide factory-installed integral emergency battery packs in luminaires shown on the Drawings. Battery pack shall be sealed, maintenance-free nickel-cadmium battery capable of operating one or two 4-foot long fluorescent lamps for a minimum of 90 minutes, with integral charger, pilot light and test switch.

05/03/13 PERMIT SET

PART 3 - EXECUTION

3.1 GENERAL

A. Luminaire locations as indicated on the Drawings are general and approximate. Verify exact location of luminaires with Engineer prior to installation. Verify adequacy of clearance with other equipment such as ducts, pipes, conduit, or structural elements. Bring conflicts to Engineer's attention before proceeding with work.

B. Verify ceiling construction and furnish appropriate luminaire mounting supports, hardware, trim, and accessories for each luminaire.

C. Install luminaires in mechanical equipment rooms after ductwork and piping installation. Locate and mount luminaires as indicated on the Drawings unless mechanical equipment prohibits or makes it impractical to do so. In such cases, chain- or wall-mount luminaires so that serviceable equipment is illuminated.

D. Luminaires shall be installed free of light leaks, warps, dents, or other irregularities. Light leaks are not acceptable.

E. Install reflector cones, aperture plates, lenses, diffusers, louvers, and decorative elements of luminaires after completion of wet work, plastering, painting, and general clean-up in the area of the luminaires. Provide final focusing and adjusting of lighting equipment. Focusing and adjusting shall be performed under the Engineer's supervision after normal working hours.

F. Parabolic luminaires shall be installed with mylar cover over louvers. Cover shall be UL Listed for temporary lighting. Upon completion of work, remove mylar cover with white gloves.

G. Visible hanging devices shall be finished to match the luminaire finish, unless otherwise noted. Suspended fixtures shall hang level and aligned when installed in rows.

H. Provide fire-rated enclosures around recessed luminaires that are installed in fire-rated ceilings.

I. Provide attachment devices, brackets, plaster rings, saddle hanger and tie bars made of formed, rolled, or cast metal shapes with the requisite rigidity and strength to maintain continuous alignment and support of installed luminaires.

J. Luminaires mounted in suspended ceilings shall be attached to the main runners of the ceiling system with appropriate mounting hardware. Provide independent 45-degree slack cables from corners of luminaires to structure above.

K. Provide at least two supports for single fluorescent luminaires. Where luminaires are continuously mounted in rows, provide supports at maximum intervals of eight feet, or closer if necessary to prevent visible deflection.

L. Equipment requiring access for service and maintenance shall be installed so that components requiring access are readily accessible.

M. Immediately prior to occupancy clear reflectors, reflector cones, aperture plates, lenses, trim rings, faceplates, louvers, lamps and decorative elements.

N. Replace burnt out lamps and noisy or defective ballasts.

O. Luminaires with emergency battery packs connected to unswitched circuits shall be permanently on and shall go into the emergency mode upon loss of power to the emergency battery pack. Luminaires with emergency battery packs connected to switched circuits shall be controlled on and off by the controlling device and shall go into the emergency mode upon loss of power to the emergency battery pack (provide switched and unswitched leads to these luminaires).

END OF SECTION

05/03/13 PERMIT SET

SECTION 26 50 00
LIGHTING FIXTURES, LAMPS, BALLASTS

PART 1 - GENERAL

1.01 DESCRIPTION

A. Provide and install lighting fixtures as shown on drawings and as specified in this and all related Sections.

1.02 DEFINITIONS

A. The term Engineer refers to the Engineer, Interior Designer, Lighting Designer or Owner's Representative individually or collectively.

1.03 GENERAL REQUIREMENTS

A. Provide all lighting fixtures as shown complete with all lamps, completely wired, controlled and securely attached to supports.

B. Where a catalog number and a narrative or pictorial descriptions are provided, the written description shall take precedence and prevail.

C. General Contractor shall provide electrical subcontractor with entire lighting specification (including fixture illustrations and sketches); electrical subcontractor shall provide each specified manufacturer with complete information about the fixtures they will supply.

D. Type of fixtures shall be as indicated alphanumerically and as specified.

E. Fixture details shown may be modified by the manufacturer provided all of the following conditions have been met:

1. Fixture performance is equal or improved;

2. Structural, mechanical, electrical, safety, and maintenance characteristics are equal or improved;

3. Cost to the Owner is reduced or equal.

4. Modifications have been reviewed by the Engineer and have been approved by the Engineer in writing.

F. Fixture shown are basis of design; Engineer to approve alternate fixture submittals, as applicable.

1.04 STANDARDS

A. The standards and regulating committees referred to in this specification and to which compliance with is required are:

1. UL Underwriters Laboratories
2. NRTL Nationally Recognized Testing Laboratory
3. NEC National Electric Code
4. ANSI American National Standards Institute
5. ASTM American Society of Testing and Materials
6. NEMA National Electrical Manufacturers Association

05/03/13 PERMIT SET

7. IEC International Electrotechnical Commission

B. All fixtures and assembled components shall be new, of good quality, and be approved by and bear the label of UL for the applicable location and conditions (wet, damp, dry, etc.) or other approved testing agencies, i.e. CSA, ETL, unless otherwise specified in writing.

C. All fixtures shall meet all required local, state and/or national building, electrical and energy codes and regulations.

1.05 BIDDING

A. Follow bidding procedures as described in Division 01 of this specification.

B. Provide unit and alternate prices as required in Section 26 50 10 Lighting Fixture Schedule at the end of this section.

1.06 SUBSTITUTIONS

A. Bidders' attention is called to the following procedure to be followed in submitting alternate fixture manufacturers than those specified:

1. Bidders wishing to obtain approval on brands other than those specified by name and/or catalog number in Section 26 50 00, Lighting Fixture Schedule at the end of section, shall submit their requests not later than ten (10) business days before the bid opening. Approval will be in the form of an addendum to the specifications issued to all prospective bidders indicating that the additional brand or brands are approved as equal to those specified as far as the requirements of the project are concerned. If the bidders do not elect to obtain prior approval during the time so specified, the Owner has no obligation to review or consider any such article after the contract award.

2. If the bidder wishes to substitute fixtures from alternate manufacturers, his attention is called to Section 2.01, GENERAL MATERIAL REQUIREMENTS of PART 2 - PRODUCTS. In addition, he shall note that the dimensions of visible parts of many fixtures (for example, the aperture diameters of incandescent fixtures) are binding to the bidder and cannot be changed without prior approval by the Engineer.

3. Contractor shall pay professional fees (at current standard hourly rates) and reimburse expenses directly to all designers (Architect, Engineer, Lighting Designer, et. al.) for time spent reviewing substitutions proposed by the Contractor. If payment by the Contractor is not made within 60 days of invoice date, the Owner shall deduct the amount due from subsequent payments to the Contractor in order to reimburse designers.

4. Request for approval shall be accompanied by working fixture samples (with an appropriate lamp, complete photometric, mechanical and electrical data, list of materials and finishes and unit cost to the Owner) of both the specified brand and the proposed substitutes as required to make complete comparison and evaluation. These samples shall be in addition to those required by Lighting Fixture Specification. The above data shall be delivered separately to the Engineer and the Lighting Designer. The fixture samples shall be furnished and installed, at the bidder's expense, at the location selected by the Engineer. In addition, the bidder shall furnish the Engineer and the Lighting Designer with the name and location of at least one completed project where each proposed substitute has been in operation for a period of at least six (6) months, as well

05/03/13 PERMIT SET

as the names and addresses of the Owner, the Lighting Designer and the Engineer of record.

1.07 SUBMITTALS

A. For standard catalog items with no modifications, submit catalog cut sheets prepared by the manufacturer which clearly show all elements to be supplied and all corresponding product data (including lamping; ballast manufacturer and model number; voltage; accessories or options and any miscellaneous items detailed in the written description of the specification.) If cut sheet shows more than one (1) fixture type, all non-applicable information shall be crossed out.

B. For standard cataloged fixtures:

1. Submit one sample cone for each fixture type for review. Submit a certificate of compliance with Alzak finish requirements with all requests for approval.

2. When more than one louver panel occurs in a fixture, submit as a part of shop drawings the dimensioned layout of individual louver panels and supporting "tee" members.

C. For custom fixtures, modified fixtures or linear fluorescent fixtures mounted in continuous rows, submit an engineered line drawing prepared by the manufacturer showing all details of construction, lengths of runs, lamping layout, pendant locations, power locations, finishes and list of materials. Drawings must be to scale. Contractor shall provide manufacturer with field dimensions where required. If scallop shields, wallwash reflectors or baffles are required, drawings shall indicate relative position to wall or adjacent vertical surface.

D. For all submittals under paragraphs A through C above, manufacturer shall provide submittals with fixture installation instruction sheets.

E. For all submittals under paragraphs A through C above, manufacturer shall provide submittals within two weeks of receipt of order. All submittals shall have project name and fixture type clearly shown.

F. Fixture cuts and shop drawings shall be submitted in quantities and format as described in the general conditions section the specification.

G. The Engineer shall make the final determination as to whether or not the submittal contains sufficient information and reserves the right to request a shop drawing if the fixture cut is insufficient.

H. MOCK-UPS

1. It shall be the responsibility of the Contractor to provide a mock-up of the lighting fixture or lighting systems as indicated in the fixture description. The mock-up shall be erected within a time period and in a location that is acceptable to the Engineer.

2. The mock-up installation shall closely conform to the conditions of the actual installation as to: height, distance from ceiling, number and type of lamps, material, color and etc. The Contractor shall submit a written description of each proposed mock-up with drawings in order to obtain the Engineer's approval prior to commencement of each mock-up.

05/03/13 PERMIT SET

3. The purpose of the mock-up will be to study the general appearance and performance of the intended lighting systems. At that time, certain minimal test variations may be requested as to lamp location, lamp type, reflector shape, color and etc. Final modifications, if any, shall be considered a part of these Specifications and shall be accomplished with no additional cost to the Owner.

I. SAMPLES

1. It shall be the responsibility of the Contractor to provide a sample(s) fixture as indicated in Section 26 50 00, Lighting Fixture Schedule at the end of section. When samples are called for the manufacturer shall provide two working samples complete with lamp, ballast (rated for 120 Volt operation) and 6' pig-tail with 3-prong Edison plug.

2. The sample(s) shall be shipped to a location that is determined by the Engineer. Shipping and return shipping costs shall be provided as part of the contract.

3. The purpose of the sample is to review manufacturing techniques, detailing, lamping and scale. Sample fixtures must be approved prior to fabrication of fixtures for the project. Minor modifications, if any, shall be considered part of these Specifications and shall be accomplished with no additional cost to the Owner.

4. Sample fixtures may not be used on the project.

1.08 EXTRA STOCK

A. Furnish to the Owner and store at the site where directed, extra stock of each type of lighting fixture type and lamp type installed in the Project in quantities as required by Owner, packaged in manufacturer's unopened cartons and identified as to contents by fixture type.

B. Furnish items above with appropriate quantity of each exposed trim, fastener, bracket and other items as required for a complete installation.

1.09 WARRANTIES

A. All fixtures and workmanship shall be guaranteed free of defects and fully operational for a minimum of one year after the acceptance of the project by the Owner. Any fixtures or workmanship found to be defective during the warranty period will be either fixed or replaced by the Contractor at no cost to the Owner.

B. Ballasts for fluorescent fixtures shall be covered by a five year warranty and high intensity discharge fixtures shall be covered by a two year warranty against defects in workmanship or material. Warranty shall include in-warranty service program providing for payment of authorized labor charges incurred in replacement of inoperative, in- warranty ballasts.

PART 2 - PRODUCTS

2.01 GENERAL MATERIAL REQUIREMENTS

A. Ferrous mounting hardware and accessories shall be finished using either a galvanic or phosphate primer/baked paint process to prevent corrosion and discoloration of adjacent materials.

B. For weatherproof and vaportight installation, painted finishes of fixtures and accessories shall be weatherproof enamel using proper primers or hot dipped galvanized and bonderized epoxy, in accordance with manufacturer's requirements. Unless otherwise specified all painted surfaces shall have a life expectancy of not less than twenty years.

1. Hangers shall be conduit with chemically resistant, weatherproof, baked enamel finish.

2. Where dissimilar metal parts come in contact with each other, apply to both surfaces a coating material to prevent corrosion.

3. Colors shall be as specified in the Section 26 50 00, Lighting Fixture Schedule at the end of section of this specification.

C. Fasteners shall be manufactured of non-magnetic stainless steel or anodized aluminum, except in indoor applications where galvanized steel shall be acceptable.

D. Fixtures shall be free of light leaks and shall be designed to provide sufficient ventilation of lamps and ballasts including vent holes where required.

E. Outdoor fixtures shall have wire mesh corrosion resistant screens in the vent holes properly sized to prevent incursion of insects, small animals, and/or other small rodents.

F. All sheet metal work shall be free from tool marks and dents and shall have accurate angles bent as sharp as compatible with the gauges of the required metal. All intersections and joints shall be formed true and of adequate strength and structural rigidity to prevent any distortion after assembly. All sheet metal shall be free of light leaks. All edges shall be finished so there are no sharp edges exposed. All miters shall be in accurate alignment with abutting intersecting members. Piecing of plates in individual runs in single planes and the use of spliced pieces or filler material to cover defective workmanship shall not be acceptable. Sheet metal work shall be properly fabricated so that planes will not deform (i.e. become concave or convex, due to normal expected ambient and operating conditions).

G. Lampholders shall hold lamps securely against normal vibrations and maintenance handling. Provide solid nickel or nickel-and-silver-plated contacts in lampholders for the following types of lamps:

1. Mogul screw base incandescent, metal halide, and high pressure sodium.

2. Lamps in outdoor fixtures.

3. Tungsten-halogen lamps.

H. Wiring channels and lampholder mountings shall be rigid and accurately made.

I. Reflector Cones:

1. Provide 45° lamp and lamp image cut-off unless otherwise specified. In fixtures where upper reflector is separate from cone, cut-off shall be 45° unless otherwise specified.

2. Plastic materials shall not be used for reflector cones or aperture plates.

05/03/13 PERMIT SET

3. Fixtures in which reflector cones are riveted or welded to housing or where removal of cone requires pressure to be applied to finished surface of reflector shall not be acceptable.

4. Cone flange shall be formed as an integral part of the cone and shall have identical color and finish as the cone, except as shown. The flange major surface shall be perpendicular to the cone axis. The width of the flange shall adequately cover the ceiling opening without light leaks. No fixture parts (housing, mounting frame, etc.) shall be visible between the ceiling surface and the edge of the cone flange. The same requirement shall be applicable to fixtures where main reflector extends down to the bottom edge of the fixture without a separate cone. In such case, the flange shall be formed as an integral part of the main reflector.

5. Reflector cones shall be manufactured of uniform gauge, not less than 0.032" thick, high purity aluminum Alcoa 3002 alloy free of spin marks or other defects or blemishes caused during manufacturing.

6. The finish of the inner surface of the reflector shall be highly specular as produced under the Alzak process. The reflector shall have an anodic coating of not less than four mils thick. The reflector inner surface shall be free of water spotting and shall maintain a reflectivity ratio of not less than 85% on clear specular finish. The reflector shall have a low iridescence finish free from multiple colors seen from normal viewing angles. Colors shall be derived from dyes supplied by Sandoz Chemical Company or approved equal.

7. The reflecting surface of the cone shall be tested for proper sealing. Test per ASTM B136-63T.

8. Fixtures with Alzak reflector cones, unless otherwise specified, must be furnished by the same manufacturer.

9. Reflector cone retention devices shall not deform cone in any manner whatsoever.

10. Submit a certificate of compliance with Alzak finish requirements with all requests for approval.

J. Lenses:

1. Fresnel:

   a. Lens shall have uniform brightness throughout the entire visible area at angles from 45° to 90° from vertical, without bright spots or striations.

   b. Lens shall have opaque risers; color shall be as specified in Section 26 50 00, Lighting Fixture Schedule at the end of section.

   c. Finish of visible regress surface of door shall be matte baked enamel paint, special color as selected by Engineer.

   d. All fixtures with fresnel lenses, unless otherwise specified, must be furnished by the same manufacturer.

2. Glass:

05/03/13 PERMIT SET

a. Flat glass lenses shall be heat tempered borosilicate glass unless otherwise noted.

b. Glass finishes, i.e. sandblasting, etching, polishing shall be performed as described in the fixture description.

3. Acrylic:

a. Lenses shall be of injection molded crystal clear material 100% virgin acrylic (except as shown). For lenses with male pattern of pyramids or cones, specified minimum thickness refers to distance from flat surface to base of pyramids (cones), or thickness of undisturbed material. For lenses with female pattern, specified minimum thickness refers to overall thickness of material.

b. Lenses shall fully eliminate lamp images when viewed from all directions within the 45° to 90° angle from vertical when the ratio of lamp spacing to the distance from lamp underside to top of lens does not exceed 1.50. Within the viewing angle from 0° to 45° the ratio of maximum brightness (under a lamp) to minimum brightness (between lamps) shall not exceed 3 to 1.

c. Finishes, i.e. sandblasting, etching, polishing shall be performed as described in the fixture description.

K. Louvers:

1. Parabolic:

a. Louvers shall be continuously bound in channel formed frame, finish and color as specified or as selected.

b. Louver shall provide a minimum visual cut-off to the lamp of 45°.

c. The finish of the inner surface of the reflector shall be highly specular as produced under the Alzak process. The reflector shall have an anodic coating of not less than four mils thick. The reflector inner surface shall be free of water spotting and shall maintain a reflectivity ratio of not less than 85% on clear specular finish. The reflector shall have a low iridescence finish free from multiple colors seen from normal viewing angles.

2. Flat Blade:

a. Provide flat blade louvers within formed frame, finish and color as specified.

b. Louvers to provide minimum of 45° degree cut-off from lamp image.

c. Blade thickness to minimum .125” flat steel.

L. In adjustable fixtures, aiming and positive locking devices shall be provided.

M. Fixtures with an adjustable lamp and using a lamp with an asymmetrical light pattern shall have an aiming stop which can be permanently set so that the lamp shall remain correctly positioned after service or relamping.

N. Fluorescent Fixtures:

05/03/13 PERMIT SET

1. Hot Cathode:

   a. Housing:

      1) No. 22 minimum gauge steel, bonderized or equal rust protected, or No. 16 gauge aluminum rigid construction, suitable for continuous row mounting where indicated.

      2) Finish: Baked enamel paint finish unless otherwise specified, color as specified or as selected.

      3) Exterior Fixture Finishes:

         a) Unless otherwise specified, all painted surfaces shall have an outdoor life expectancy of not less than 20 years. Surfaces shall be prepared, primed, and material applied in accordance with the manufacturer's requirements.

         b) Color: Colors shall be as specified under Section 26 50 00, Lighting Fixture Schedule at the end of section.

   b. Reflector: Minimum 85% reflectance.

   c. Lightshields:

      1) Frames: Provide extruded aluminum frames with mitered corners filled and ground smooth. Provided with concealed hinges and invisible latching.

      2) No cross bars shall be permitted over lightshields.

   d. Lampholders:

      1) Lampholders shall be UL listed, and meet IEC-60400, “International Standard: Lampholders for tubular fluorescent lamps and startholders”.

   e. For rapid start lamps on single ballasts, provide one (1) grounding lampholder per lamp. Lampholders operating with open circuit voltage in excess of 300 volts shall be safety type and shall open supply circuit when lamp is removed from lampholder.

      1) Mount lamps used in rapid start circuits 430mA and below: within 1/2" of grounded metal as long as the lamp.

      2) 800mA and 1500mA lamps: mount within 1" of grounded metal as long as the lamp.

   f. Fluorescent fixtures shall conform to NEMA Standards, including references to fixture dimensions and temperature ratings.

   g. Ballasts shall be electronic high power factor (greater than 90%), ballast factor (greater than 87%) and approved by UL (UL 935 listed). Ballasts shall be certified for voltage and number of lamps specified and equipped with internal thermal protectors unless otherwise specified.

      1) Ballasts shall have a Crest Factor of less than one and seven tenths.

05/03/13 PERMIT SET

2) Ballasts for indoor applications shall be "Class P".

3) Provide multi-lamp ballasts where possible including continuous rows of one-lamp fixtures, and one-lamp ballasts only where the fixture layout does not permit the use of multi-lamp ballasts.

4) Ballast shall be a dedicated ballast to operate a specific lamp, i.e., T8 ballasts specifically for a T8 lamp.

5) All ballasts shall operate at the voltage as described in Section 26 50 00, Lighting Fixture Schedule at the end of section and confirmed on electrical drawings. Ballasts shall operate lamps properly through the following supply voltage ranges:

   a) Rated voltage +/- 10%
   b) Universal voltage of 108 to 305V on 50 or 60Hz supply

6) Ballast shall tolerate sustained open circuit and short circuit output conditions without damage.

7) Frequency shall be 20 Khz or greater except as noted without any discernible flicker (<3% flicker index).

8) Ballast shall have input current total harmonic distortion not to exceed 10% of the fundamental harmonic (60 Hz).

9) Ballast shall not contain PCB materials.

10) Ballast shall provide transient immunity as recommended by ANSI C62.41-1991 location Category A2.

11) Ballast shall be encapsulated to ensure maximum thermal and structural integrity.

12) Ballast minimum sound ratings:

   a) 265 mA: Class 'A'

   b) 430 mA: Class 'A'

   c) 800 mA: Class 'B'

   d) 1500 mA: Class 'C'

13) All fixtures installed in exterior or unheated interior spaces shall be supplied with ballasts which start lamps down to 0°F unless noted otherwise.

14) Ballasts for T5, T5HO, and CFL lamps shall incorporate auto resetting lamp shutdown circuitry for end of lamp life protection thereby allowing for re-lamping without the need to cycle power.

05/03/13 PERMIT SET

15) Program Rapid start ballasts shall be used when the lamps are to be frequently turned on/off (with cycles of less than 3 hours). Otherwise ballast shall provide instant starting sequence consistent with ANSI standard C82.11-1993.

16) Ballast shall be manufactured in an ISO 9002 certified facility.

17) Manufacturer shall have minimum 15 years of manufacturing experience.

18) Ballast, unless specified otherwise, shall be same manufacturer and model in each fixture of the same type. Acceptable ballast manufacturers unless otherwise noted are:

a) Advance

b) Universal Lighting Technologies

c) Osram/Sylvania

d) Lutron

h. Lighting fixtures recessed in a hung ceiling where the space above the hung ceiling is used as a plenum chamber for either supply or return air for the air conditioning system shall be designed, manufactured and wired to conform to NEC Article 300-22.

2. When specified, fluorescent luminaires shall have radio frequency interference (RFI) or electromagnetic interference filters. Filters shall either be integral or external to the ballast, but must be integral to the luminaire assembly with one filter per ballast and shall suppress electromagnetic interference in the AM radio band from 500 to 1700 kHz. Filters shall also be in the circuit serving the lighting fixture.

O. Incandescent Fixtures:

1. Incandescent fixtures, unless otherwise specified, shall be operated at 90% of rated lamp voltage by means of a bucking transformer at the distribution panel for extended lamp life. Bucking transformers shall not be used on those circuits where dimmers are used. Refer to Electrical Engineers drawings and Specifications for manufacturer, quantity and size of bucking transformers required. (Refer to Section 26 50 00, Lighting Fixture Schedule at the end of section, for lamp voltages.)

2. Housing:

a. Steel, bonderized or equal rust protected or aluminum, rigid construction. Minimum gauge thickness shall be as follows:

1) Interior locations: No. 20 gauge steel, No. 16 gauge aluminum.

2) Exterior locations: No. 18 gauge steel, No. 14 gauge aluminum.

b. Finish: Baked enamel finish (except when otherwise specified).

1) Concealed interior surfaces (this applies to interior hardware, lampholders, yokes, brackets, etc.): matte black.

2) Concealed exterior surfaces: matte black.

3) Visible surfaces: color and texture as specified below for each fixture type or as selected.

4) Exterior Fixture Finishes:

a) Unless otherwise specified, all painted surfaces shall have an outdoor life expectancy of not less than 20 years. Surfaces shall be prepared, primed, and material applied in accordance with the manufacturer's requirements.

b) Color: Colors shall be as specified under Section 26 50 00, Lighting Fixture Schedule at the end of section.

3. Reflector Cones: refer to "Reflector Cones", above.

4. Reflectors not visible within normal viewing angles shall be highly specular as produced under the Alzak process, except when otherwise specified. Minimum reflectance shall be 85%.

5. Provide safety devices for removable fixture elements (cones, reflectors, lenses and fixture doors, etc.). Safety devices shall support removable elements when not in normal operating position, and be detachable if necessary. This device shall not interfere with fixture performance, maintenance, or the seating of any fixture element, and shall not be visible during normal fixture operation.

6. Thermal protection device shall be provided as required by code.

P. High Intensity Discharge Fixtures:

1. Housing, where applicable:

a. Steel bonderized or equal rust protected, or aluminum, rigid construction. Minimum gauge thickness shall be as follows:

1) Interior locations: No. 20 gauge steel, No. 16 gauge aluminum.

2) Exterior locations: No. 18 gauge steel, No. 14 gauge aluminum.

b. Finish: Baked enamel finish.

1) Concealed surfaces: matte black.

2) Visible surfaces: color and texture as specified below for each fixture type or as specified in Section 26 50 00, Lighting Fixture Schedule at the end of section.

3) Exterior Fixture Finishes:

a) Unless otherwise specified, all painted surfaces shall have an outdoor life expectancy of not less than 20 years. Surfaces shall be prepared, primed, and material applied in accordance with the manufacturer's requirements.

b) Color: Colors shall be as specified under Section 26 50 00, Lighting Fixture Schedule at the end of section.

05/03/13 PERMIT SET

c. Lampholder housing: cast aluminum with integral heat radiating fins to assure cool lamp base operation.

d. Fixture housing design shall provide for top and bottom relamping, unless otherwise specified.

2. Reflector: High purity (not less than 99.0%) aluminum. Specular finish shall be achieved by mechanical- and electro-polishing. Reflector shall be anodized to prevent surface corrosion or deterioration. The reflectance shall not be less than 85%.

3. Provide safety devices for removable fixture elements (cones, reflectors, lenses, fixture doors, etc.). Safety devices shall support removable elements when not in normal operating position, and be detachable if necessary. This device shall not interfere with fixture performance, maintenance, or the seating of any fixture element, and shall not be visible during normal fixture operation.

4. Magnetic Ballasts: High power factor, UL approved constant wattage auto- transformer type for voltage and lamp specified - 60 hertz.

   a. Ballasts shall be designed in accordance with all applicable ANSI specifications including ANSI C82.4 and shall comply with UL 1029.

   b. Ballasts shall have a normal ambient operating temperature of 104 degrees F.

   c. The light output shall not vary more than 11% with a +/- 5% voltage variation in high reactance circuit

   d. The light output shall not vary more than 5% with +/- 10% voltage variation in CWA circuit.

   e. Lamp drop out voltage shall not exceed minus 25% of the rated voltage for the high reactance circuit and minus 30% for the CWA circuit.

   f. Ballasts for indoor applications shall be encased in a housing which provides necessary wiring compartments and provisions for required electrical connectors or devices.

   g. Ballast components shall be surrounded with a thermosetting fill to assure adequate heat dissipation and quiet operation.

   h. Ballasts shall be provided with necessary mounting hardware and vibration dampers.

   i. Ballasts for outdoor use shall be encased in watertight enclosures with proper outdoor wiring devices. Ballasts shall be suitable for starting lamps at temperatures between -29°C, and 41°C.

5. Electronic Metal Halide ballasts:

   a. Unless specified otherwise, shall be same manufacturer and model in each fixture of the same type.

   b. Shall have an input voltage range with a variation of at least +/- 20% and +/- 1% lamp regulation resulting in greater lamp stability in areas with poor power regulation.

c. Output shall be “square wave” with an operating frequency of less than 200 Hz.

d. Shall incorporate a “Turn Off” shutdown safety feature not exceeding a response time of 3 seconds to prevent excessive ignition, undue system stress and improved long term performance of the ballast under the following conditions: no lamp, failed lamp, end of life lamp, leaker lamps and other sustained abnormal conditions such as rectification and glow mode.

e. Shall comply with FCC Part 18 Class A. The manufacturer shall provide documentation of compliance with non-consumer limits for EMI & RFI.

f. Shall have a Total Harmonic Distortion (THD) less than 10%.

g. Shall have a lamp Crest Factor of les than 1.3.

h. Shall have a Power Factor of not less than 96%.

i. Shall be sound rated “A”.

j. Shall be equipped with internal thermal protection to shut down the ballast when operating temperatures reach unacceptable levels.

k. Shall be UL and CUL “Listed or Recognized” for 120v and 277v applications and CE “Listed” for 220 to 240v 50 Hz applications.

l. Shall incorporate a metal case and be suitable for recessed use.

m. Shall be designated Type 1 – Outdoor

n. Shall be capable of remote mounting with a distance of not less than 10’-0”.

o. Shall incorporate Electrolytic Capacitor(s) with minimum rating of 8,000 hours at 105 degrees C and a minimum life expectancy exceeding 64,000 hours at 75 degrees C.

p. Manufacturer shall offer a Five (5) year product warranty.

q. Manufacturer shall have a minimum of fifteen (15) experience in the manufacture of electronic power lighting products, two (2) years experience in the manufacture of Electronic Metal Halide ballasts and no less than fifty thousand (50,000) units installed worldwide.

r. The specified lamps shall be approved and/or warranted by the lamp manufacturer for use with the designated Electronic Metal Halide ballast.

s. Shall have built in circuit protection.

t. Shall have a designated ballast factor of 1.0.

u. Acceptable ballast manufacturers unless otherwise noted are:

1) Aromat

2) Hatch

3) Metro-light

6. Lighting fixtures recessed in a hung ceiling where the space above the ceiling is used as a plenum chamber for either supply or return air for the air conditioning system shall be designed, manufactured, and wired to conform with NEC Article 300-22.

7. Provide clear glass safety lens in all Metal Halide fixtures unless otherwise noted.

Q. Solid State Lighting / Light Emitting Diode (LED) Lamps and Luminaires:

1. General:

a. Luminaire manufacturer shall have a minimum of five (5) years experience in the manufacture and design of LED products and systems and no less than one hundred (100) North American installations.

b. Unless otherwise specified, all LED luminaires and power/data supplies shall be provided by a single manufacturer to ensure compatibility.

c. All components, peripheral devices and control software are to be provided by and shall be the responsibility of a single entity. All components shall perform successfully as a complete system and shall operate as described in Lighting Designer's Control Narrative documents or Section 26 50 00, Lighting Fixture Schedule at the end of this section.

d. Provide submittals as described in Part 1 above.

e. Provide two (2) samples of each separate manufacturer and type of LED luminaire. Follow procedure for submitting samples as described in Part 1 above.

f. Include all components necessary for a complete installation. Provide all power supplies, synchronizers, data cables, and data terminators for a complete working system.

g. All LED sources used in the LED luminaire shall be of proven quality from established and reputable LED manufacturers and shall have been fabricated after 2007. Acceptable LED lamp manufacturers unless otherwise noted are:

1) Cree, Inc.
2) Philips Lighting
3) Nichia Corporation
4) Norlux
5) Opto Technology, Inc.
6) Osram Optronic Semiconductors
7) Xicato

2. Replacement and Spares:

a. Manufacturer shall provide written guarantee of the following:

1) Manufacturer will keep record of original bin for each LED module and have replacement modules from the same bin available for three (3) years after date of installation.

2) Manufacturer will keep an inventory of replacement parts (source assembly, power and control components).

3) Manufacturer's LED system will not become obsolete for ten (10) years: Manufacturer will provide exact replacement parts, or provide upgraded parts that are designed to fit into the original luminaire and provide equivalent distribution and lumen output to the original, without any negative consequences.

b. All parts of system shall replaceable in field. Manufacturer shall provide written guarantee of the following:

1) Manufacturer has in place a written recycling and re-use program, and will accept returned product and/or components for recycling or re-use.

2) Manufacturer will properly dispose of non-recyclable components that are deemed harmful to the environment.

c. System shall carry a full warranty for five (5) years. Manufacturer shall be responsible for cost of labor not to exceed $50 per individual part, and cost of shipping, to replace any component of the system that fails within 2 years of installation.

3. Products and Components – Performance

a. LED luminaires and components shall be UL listed or UL classified.

b. LED luminaires and components shall be CE certified.

c. LED luminaires and components shall be PSE marked.

d. All LED luminaires shall be subjected to the following JEDEC Reliability Tests for Lead-free Semiconductors: HTOL, RTOL, LTOL, PTMCL, TMSK, Mechanical Shock, Variable Vibration Frequency, SHR, Autoclave.

e. To ensure luminaire quality, luminaire shall have been tested under accelerated life test conditions including an operating temperature span of 360 degrees F, and cyclic loading up to 60G.

f. All products included in system shall use Mil-Std 810F, Random Vibration 7.698g as a minimum standard. In installations subject to vibration, luminaire shall be installed with vibration isolation hardware to sufficiently dampen vibrations.

g. All LED components shall be mercury and lead-free.

h. All manufacturing processes and materials shall conform to the requirements of the European Union's Restriction on the Use of Hazardous Substances in Electrical and Electronics Equipment (RoHS) Directive, 2002/95/EC.

i. LEDs shall comply with ANSI/NEMA/ANSLG C78.377-2008 – Specifications for the Chromaticity of Solid State Lighting Products. Color shall remain stable throughout the life of the lamp. Color shall match approved sample.

j. LEDs shall comply with IESNA LM-80 – Standards for Lumen Maintenance of LED Lighting Products

k. White LEDs shall have a rated source life of 50,000 hours under normal operating conditions. RGB LEDs shall have a rated source life of 100,000 hours. LED “rated source life” is defined as the time when a minimum of 70% of initial lumen output remains.

l. Luminaire assembly shall include a method of dissipating heat so as to not degrade life of source, electronic equipment, or lenses. LED luminaire housing shall be designed to transfer heat from the LED board to the outside environment. Luminaire housing shall have no negative impact on life of components.

m. Manufacturer shall supply in writing a range of permissible operating temperatures in which system will perform optimally.

n. High power LED luminaires shall be thermally protected using one or more of the following thermal management techniques: metal core board, gap pad, and/or internal monitoring firmware

o. LEDs shall be adequately protected from moisture or dust in interior applications.

p. For wet and damp use, LED-based luminaires itself shall be sealed, rated, and tested for appropriate environmental conditions, not accomplished by using an additional housing or enclosure. Such protection shall have no negative impact on rated life of source or components, or if so, such reductions shall be explicitly brought to the attention of the designer.

q. All hardwired connections to LED luminaires shall be reverse polarity protected and provide high voltage protection in the event connections are reversed or shorted during the installation process.

r. The LED luminaire shall be operated at constant and carefully regulated current levels. LEDs shall not be overdriven beyond their specified nominal voltage and current.

s. RGB LED luminaires shall utilize an equal combination of high brightness red, blue and green LEDs, unless otherwise noted, to provide up to 16.7 million additive RGB colors and shall be capable of at least 8-bit control.

t. Manufacturer shall be able to provide supporting documentation of the product meeting third party regulatory compliance.

u. Manufacturer shall ensure that products undergo and successfully meet appropriate design and manufacturability testing including Design FMEA, Process FMEA, Environmental Engineering Considerations and Laboratory Tests, IEC standards and UL/CE testing.

v. All LED luminaires (100% of each lot) shall undergo a minimum twenty-four (24) hour burn-in during manufacturing, prior to shipping.

w. Manufacturer shall provide Luminaire Efficacy (lm/W), total luminous flux (lumens), luminous intensity (candelas) chromaticity coordinates, CCT and CRI. optical performance, polar diagrams, and relevant luminance and illuminance photometric

data. Provide data in IES file format in accordance with IES LM-79-2008, based on test results from an independent Nationally Recognized Testing Laboratory.

x. Power / data supply shall have the following:

1) Supply outputs shall have current limiting protection.

2) Supply shall provide miswiring protection.

3) Supply shall have power factor correction.

4) Supply shall provide connections that are conduit-ready or clamp-style connections in the case of low-voltage wiring.

5) Supply shall come with a housing that meets a minimum IP20 rating for dry location installation unless located in a damp or wet location.

6) Supply shall be UL listed for Class 1 or Class 2 wiring

4. LED Control and Communication – Performance

a. LED luminaires shall be network controllable via digital control.

b. The LED system shall use integral and differential non-linear control.

c. Constant data transmission rates shall be employed, resulting in the output being independent of distance of cable between power supply and light source within the specified length.

d. LED system shall have a selectable means of external control via a data network.

e. Each LED luminaire and/or node shall have the capability to be set to a unique and individual address. Address shall be selectable through on board switches or by an external hardware or software method.

f. The LED system shall be scalable, with every LED luminaire/address in the system capable of being controlled by a single, centralized controller.

R. Wiring:

1. Voltage Rating

a. For voltages up to 120 volts fixture wiring shall be rated for 300 volts minimum.

b. For voltages above 120 volts fixture wiring shall be rated for 600 volts minimum.

2. Temperature Rating - Internal to Fixture

a. All wiring shall be code-approved for fixture wiring, and shall comply with the following temperature ratings unless fixture design or local codes require higher temperature wire.

b. Incandescent

1) minimum rated between lampholder(s) and separately mounted junction box or internal transformer.

2) minimum rated between internal transformer and separately mounted junction box.

3) Tungsten-halogen lamp seal temperature shall not exceed 350°C at ambient of 25°C when tested per UL Bulletin 57, Par. 328-334. Submit certified heat test data by independent testing laboratory.

c. Fluorescent

1) minimum rating between lampholder(s) and internal ballast.

2) minimum between ballast and separate junction box, or connection within integral wireway.

d. High Intensity Discharge

1) minimum rating between lampholder(s) and separate junction box or connections with ballast components.

2) minimum rating between core and coil ballast components and separate junction box.

3) minimum rating between encased and potted ballast components and separate junction box.

3. Temperature Rating - External to Fixture

a. All flexible cord wiring between fixture components or to electrical receptacle and not in wireways shall have a minimum temperature rating of 105°C.

b. Cord type shall be suitable for application and shall be fitted with proper strain relief and watertight entries where required by application.

4. Splices

a. Splices internal to fixture shall be made within separate splice compartments and shall utilize nylon insulated crimped connections or insulated quick disconnects.

b. Splices to branch circuit wiring in separate junction boxes shall utilize flame retardant thermoplastic caps with fully seated helical metal spring and threaded entry.

5. No internal wiring shall be visible at normal viewing angles, i.e., above 45° from vertical. Use additional wire clamps if necessary. Anticipate increased visibility if fixtures are mounted on or recessed within a sloping surface.

6. Any fixture fed from more than one panel, i.e., for normal and night or emergency operation, shall have separate neutrals to each panel.

7. Furnish code-approved wiring in ceiling cavities forming air plenums.

S. Lamps:

1. Hot cathode fluorescent lamps:

   a. Shall be 3000° or 3500° Kelvin, with 85 CRI or greater except as shown. Refer to Section 26 50 00, Lighting Fixture Schedule at the end of section for details.

   b. All lamps, except as specified, shall be of the same manufacturer:

      1) General Electric
      2) North American Philips
      3) Osram/Sylvania

   c. T8 fluorescent lamps shall be of the “high performance” or “super” T8 type with extended lamp life and low mercury content.

      1) Four foot long 32 watt lamps shall have an initial lumen output of 3100 lumens, minimum.

      2) Four foot long lamps shall have a mean efficacy of 92 mean lumens per nominal wattage, minimum.

      3) Four foot long lamps shall have a rated lamp life of 24,000 hours or greater based on 3 hours per start if operated in rapid start mode.

      4) Mercury content in lamps shall be TCLP-compliant.

      5) Lamp lumen depreciation shall not be less than 92% of initial lamp lumens at 20,000 hours rated lamp life.

      6) Ballasts used with these lamps shall be a NEMA Premium electronic ballast, no substitutions allowed.

2. Incandescent lamps:

   a. 120 volt, except as shown. Refer to Section 26 50 00, Lighting Fixture Schedule at the end of section for details. All lamps, except as specified, shall be of the same manufacturer:

      1) General Electric
      2) North American Philips
      3) Osram/Sylvania

   b. Energy saving type lamps which use an electronic diode shall not be used unless otherwise specified in Section 26 50 00, Lighting Fixture Schedule at the end of section.

3. High intensity discharge lamps:

   a. Refer to Section 26 50 00, Lighting Fixture Schedule at the end of section for details. All lamps, except as specified, shall be of the same manufacturer:

      1) General Electric
      2) North American Philips
      3) Osram/Sylvania

05/03/13 PERMIT SET

4) Venture

PART 3 - EXECUTION

3.01 SHIPPING AND STORAGE

A. All fixtures received at the site shall be stored in clean and dry space until fixtures are installed.

B. Manufacturer shall clearly mark each box with fixture designation prior to shipping.

C. Reflector cones, baffles, louvers, aperture plates, and decorative elements of fixtures shall be packed by the manufacturer separate from the housing (body, stem, etc.) of the fixture.

3.02 LOCATION

A. Locations of fixtures are shown diagrammatically. Verify exact location and spacing with Reflected Ceiling Plans and other reference data before ordering of fixtures and during installation.

B. Notify Engineer about field conditions at variance with Contract Documents before commencing installation.

C. Coordinate space conditions with other trades before ordering of fixtures.

D. Pendant mount, as approved, surface type fixtures where required to meet space conditions.

E. Coordinate length of continuous-run fluorescent fixtures with adjacent walls, partitions, coffers and other architectural elements as required.

1. Continuous runs shall be defined as the optimal combination of 3’ and 4’ lamp length as necessary to complete runs with no more than 6” of free space at either end of the run as provided by the contractor.

3.03 INSTALLATION

A. Provide accessories as required for ceiling construction type indicated on Finish Schedule. Fixture catalog numbers do not necessarily denote specific mounting accessories for type of ceiling in which a fixture may be installed.

B. Provide adequate and sturdy support for each lighting fixture. Contractor shall be responsible for verifying weight and mounting method of all fixtures and furnish and install suitable supports. Fixture mounting assemblies shall comply with all local seismic codes and regulations.

C. Install rows of fixtures accurately on straight lines unless otherwise indicated on drawings. Coordinate with mechanical work.

D. Install fixtures with vent holes free of air blocking obstacles.

E. Where plaster ceilings occur, furnish plaster frames for setting under other applicable sections. Direct the setting and be responsible for correct location; make sure the bottom of frame is flush with finished ceiling, forming screed edge for finished plaster.

05/03/13 PERMIT SET

1. Fixtures shall be supported by plaster frames utilizing yokes or leveling lugs.

    a. Fixtures and support elements shall not be mounted to or in contact with ducts or pipes.

    b. Yoke shall have channel cross section of sufficient gauge, and shall support a fixture by means of not fewer than two (2) bolts each.

2. If air diffusers are located in common continuous rows with lighting fixtures in plaster ceilings, furnish plaster frames of proper length to accommodate diffusers.

3. Lighting fixtures recessed in ceilings which have a fire resistive rating of one hour or more shall be enclosed in a box which has a fire resistive rating equal to that of the ceiling.

F. Contractor shall be responsible for adjusting aperture rings on all ceiling recessed fixtures to accommodate various ceiling material thickness. Contractor shall responsible for coordinating the cut-out size in ceiling to ensure aperture covers cut-out entirely. The bottom of aperture rings shall be flush with finished ceiling or not more that 1/16" above. Under no circumstances will the aperture ring extend below the finished ceiling surface.

G. For fixtures with variable position lampholder assemblies Contractor shall confirm prior to installation proper lampholder (socket) position in field, and shall adjust, if necessary, after coordination with manufacturer.

H. Surface Mounted Fixtures: Support surface mounted fixtures from structural members other than ceiling tees.

I. Pendant Mounted Fixtures:

1. Pendant mounted fixtures shall be supported from structural framework of ceiling or from inserts cast into slab.

2. All pendants shall have swivel aligners located at the top ends; pendants shall be 1/2" rigid steel conduit unless specifically indicated otherwise on drawings or in specifications.

3. All fluorescent pendant and surface mounted fixtures shall be supported with two (2) supports per four foot section or three (3) per eight foot section unless otherwise recommended by manufacturer.

J. Bracket Mounted Fixtures: For each bracket fixture, provide flanged metal stem attached to outlet box, with threaded end suitable for supporting the fixture rigidly in design position. Flanged part of fixture stud shall be of broad base type, secured to outlet box at not fewer than three (3) points.

K. Top Relamping Fixtures: Top relamping fixtures shall have the necessary top-relamping screws loosened and moderately tightened, prior to installation, to assure ease of operation when relamping is required.

L. Fluorescent Fixtures: Replace noisy ballasts as directed, at no cost to the Owner.

M. High Intensity Discharge Fixtures: Replace noisy ballasts as directed, at no cost to the Owner.

N. Solid State Lighting / Light Emitting Diode (LED) Fixtures:

1. Color Changing or Programming Support

a. Provide installation and commissioning support to the electrical contractor as required to achieve a complete and operational system that meets the intent of the Control Narrative.

b. In addition to the above, provide a factory representative for field calibration and programming in the presence of the Lighting Designer. Number of days to be determined based on system requirements.

O. Mask the trims and bottoms of all lighting fixtures if necessary to protect the fixture during construction.

P. At the completion of construction clean the bottoms, the trim, the reflecting surfaces, lenses, baffles, louvers and reflector cones of all lighting fixtures so as to render them free of any material, substance or film foreign to the fixture. If the luminaires are deemed dirty by the Engineer at the completion of the project, the Contractor shall clean them at no additional cost to the Owner. Luminaire components whose finishes are damaged shall be replaced at no cost to the Owner.

Q. Ascertain and ensure that all lamps installed are exactly as specified for each fixture type.

R. Replace all burned-out or inoperative lamps, and inoperative ballasts in all high intensity discharge and fluorescent fixtures before the building is accepted by the Owner so that all lighting fixtures will be in first-class operating condition.

S. Re-lamp all specified H.I.D. fixtures used as construction work lights with new specified lamps. No H.I.D. lamps shall have a burning hours difference which exceeds forty (40) hours.

T. Re-lamp all specified incandescent fixtures used as construction work lights with new specified lamps. No incandescent lamps shall have a burning hours difference which exceeds forty (40) hours.

U. Provide labor and materials for final aiming of all adjustable fixtures under the Engineer's supervision. Aiming shall take place immediately before building is turned over to Owner, after regular working hours where required.

END OF SECTION

Type	Description	Location	Mfr / Catalog No.	Alternates	Finish	Lamping	Electrical Data	Notes
F1	4" wide recessed (2) lamp T5 linear fluorescent downlight with lens and MR16 LED downlight. Fixture shall be comprised of two 4' fluorescent units with downlight units at each end and one unit in the center.	Open Area Multipurpose & Office	Axis-Beam 4 BBR-F-FL-*LENGTH*-NL4-T5-2+S-M16LED-W-120-D-2-Mounting/suspension-B#-feed-*IC CONTROLS*	Mark Lighting Selux Gammalux	White	(2)T5 X-Section Osram Sylvania: FP28/830/ECO 2420 mean lumens Soraa VIVID 12.2W MR16LED MR16-50-B01-12-930-36 (Compatibility Test Report pending by Fixture and Lamp Manufacturers)	Integral HPF Electronic Lutron 10% Dimming Ballast or equal Input Watts: 32/4' Integral Electronic Transformer (dimmed) suitable for LED wattage	1. Contractor to verify and coordinate fixture installation and mounting with architectural details, housing type, field conditions, and ceiling system details including grid type and flange requirements. Contractor shall verify maximum ceiling thickness allowed by trim and inform factory if ceiling is thicker than allowed. 2. Contractor to provide battery pack, daylight/occupancy sensors as required per electrical drawings. 3 Note that there is 2 lamps in cross section for the FL portion. 4. Provide appropriate dimming system interface based on load type. Provide appropriate dimmer and transformer. Contractor to confirm LED dimming compatibility. 5. Fixture to be connected to (2) circuits: one for fluorescent and one for LED module 6. Provide manufacturer's to-scale shop drawings showing all materials, finishes and components for Lighting Designer and Engineer review prior to fabrication. 7. Provide wattage restriction label for the MR16 LED lamp and appropriate transformer based on lamp as specified - fixture to comply with UL 1598 wattage restriction label inside socket - maximum lamping wattage 12.2 watts for the MR16 LED portion of the luminaire.
F2	2.5" dia. recessed LED adjustable downlight with flood distribution (40 degree tilt, 365 rotation).	Restrooms	USA Illumination LN10RAT-BV or WV-MTG120-30KS - LRNT425-10-LNC61 (TBC)-120-SOFD - accessories	Amerlux Lucifer	White Trim	(1) 20W LED module 1250 lumens 80+CRI	Integral Power Supply Input Watts: 20 Delivered lumens: 952 (80CRI)	1. Provide Solite Diffusion Lens. 2. Contractor to coordinate fixture installation with ceiling system details including grid type, flange requirements and field conditions. In some locations fixture is mounted in ceiling slot, refer to architectural drawings for mounting information. 3. Contractor shall verify maximum ceiling thickness allowed by downlight trim and inform factory if ceiling is thicker than allowed. 4. Adjustable fixture to have lock-down mechanism. 5. Fixtures require aiming by lighting consultant after installation. Contractor to coordinate personnel and equipment necessary for aiming session.
F2d	2.5" dia. recessed LED adjustable downlight with flood distribution (40 degree tilt, 365 rotation) Same as F2, except dimmed	Open Area Multipurpose	USA Illumination LN10RAT--BV or WV-MTG120-30KS - LRNT425-10-LNC61 (TBC)-Voltage-LLFD or SOFD -DIML2	Amerlux Lucifer	White Trim	(1) 20W LED module 1250 lumens 80+CRI	Integral 0-10V dimmable driver, 10% dimming Input Watts: 20 Delivered lumens: 952 (80CRI)	1. Provide Diffused Linear Lens or solite lens - selection to be determine. 2. Contractor to coordinate fixture installation with ceiling system details including grid type, flange requirements and field conditions. In some locations fixture is mounted in ceiling slot, refer to architectural drawings for mounting information. 3. Contractor shall verify maximum ceiling thickness allowed by downlight trim and inform factory if ceiling is thicker than allowed. 4. Adjustable fixture to have lock-down mechanism. 5. Fixtures require aiming by lighting consultant after installation. Contractor to coordinate personnel and equipment necessary for aiming session. 6. Provide appropriate dimming system interface based on load type.
F3	Surface mounted fluorescent strip light with staggered lamp within Architectural cove detail.	Restrooms	Birchwood-WP System WP-T5-1STSAS-*LENGTH*-HRW-120-EB-options	Bartco	High Reflectivity white	(1)T5 X-Section Staggered Osram Sylvania: FP28/830/ECO 2420 mean lumens FP21/830/ECO 1770 mean lumens	Integral HPF Electronic Ballast. Program Start Input Watts: 32/4'	1. Contractor to provide lengths as necessary to complete runs. Do not allow more than a maximum of 4" at either end of cove. Provide a combination of 3' and 4' lamps. 2.Provide continuous runs per arhitectural drawings and field conditions. 3. Contractor shall field verify each run lengths prior to ordering. 4. Refer to architectural drawings for mounting information. 5. Provide one telescoping fixture per run. Field stagger units a minimum of 3" to maximum of 6" prevent socket shadows, verify manufacturer recommendations. Allow no more than 4" free space at either end of run. 6. Light fixture to be concealed in architectural cove. Refer to architectural drawings for details. Fixture to be aligned to top of cove. Interior of coves surfaces to be painted matte white.

Type	Description	Location	Mfr / Catalog No.	Alternates	Finish	Lamping	Electrical Data	Notes
F4	Recessed nominal 4.5" aperture lensed 10W LED downlight with 50 degree distribution.	Restrooms	USA Illumination 3020-10-LRTD4/9010-C1-30K-50-NC-120V-Accessories	Edison Price Lucifer	White Trim	10W Replaceable LED module by Manufacturer 3500K +/- 100K CCT 80+CRI 50,000hr+ L70 950 initial fixture lumens	Integral electronic power supply - Input watts: 10W Efficacy: 47 System Lumens per Watt	1. Fixture to be U.L. listed and rated for "damp locations". 2. Contractor to verify and coordinate fixture installation and mounting with architectural details, housing type, field conditions, and ceiling system details including grid type and flange requirements. Contractor shall verify maximum ceiling thickness allowed by trim and inform factory if ceiling is thicker than allowed.
F5	Surface mounted fluorescent T5 strip light with staggared lamps within Architectural cove	Blue Cove at corridor	Birchwood-WP System WP-T5-1STSAS-*LENGTH*-HRW-120V-EB-dimming-options Lee Filter - "Blue" T5 sleeve and filter TBD per mockup	Bartco	High Reflectivity white	(1)T5 X-Section Staggered Osram Sylvania: FP28/841/ECO 2600mean lumens FP21/840/ECO 1900 mean lumens	Integral Electronic Lutron 10% Dimming Ballast or equal Input Watts: 32/4'	1 to 6. Refer to F3 notes. 7. Provide appropriate dimming system interface based on load type. Provide appropriate ballast based on dimming system. 8. Contractor to coordinate 3'-0" or 4'-0" T5 lamps for a continuous run. Allow no more than 4" gap from end walls. 9. Blue lamp sleeve and filter are being considered and to be determined based on a mockup. Contractor to allow for lamp sleeve and filter as a separate line item.
F6	Track mounted adjustable 39W LED accent light	Gallery	Lighting Service Inc. LSI LumeLEX 2026-H or G-3 (color temperature)-M1 (10 degree or M2 (20 degree) (reflector)-00-S-(accessories) See reflector accessories allowance under notes.	No Know Alternates	Silver	40W LED Module (By Manuf.) 1800 initial lumens 3000K 80+ CRI 50,000hr+ L70	Integral Electronic Power Supply ELV dimming Input Watts: 39	1. Provide 70% of project with 10 degreem distribution and 30% with 20 degreem distribution. Allow another 30% of other distributions, to be determined. 2. Fixture is mounted on type F6T track. 3. Provide appropriate dimming system interface based on load type. 4. Allow for two (2) lens accessories per fixture and one hood accessory. Final accessories to be determined based on artwork. 5. Fixtures require aiming by lighting consultant after installation. Contractor to coordinate personnel and equipment necessary for aiming session. 6. Fixture to be on dimmed circuit, provide appropriate dimming system interface based on load type. Electrical contractor shall confirm that power supply type and dimmer type are compatible prior to installation.
F6T	Surface mounted single circuit track system	Gallery	Lighting Service Inc. 31010/31020/31030 Surface mounted track-silver-120v - accessories and track components are required by contractor	No Know Alternates	Silver	Allow 50W per LF	N/A	1. Contractor to provide all necessary lengths, feeds, connectors, supports, and other components for complete and code compliant installation. 2. Refer to architectural drawings for track run length. Provide final lenghts based on field conditions. 3. Manufacturer to submit a layout drawing for run lengths specified on architectural drawings during shop drawing review for lighting designer and engineer approval prior to fabrication.

Type	Description	Location	Mfr / Catalog No.	Alternates	Finish	Lamping	Electrical Data	Notes
F7	Surface-mounted continuous LED undercabinet light, fixtures are to be connected end to end for continuous mounting.	Kitchenette	Tech Lighting 700UCF-LENGTH-9-3-W-LED 700UCSB-W, 700UCJC-LENGTH-W As Required-120v	Finelite Boca Flasher	White (concealed behind fascia)	6.5W/ft Remote Phosphor LED by Manufacturer 80+ CRI 3,000K CCT + 75K 50,000hr+ L70	Integral Electronic Power Supply Input Watts: 8/ft 120V Only	1. Modular units to be field-installed for a continuous run condition as shown on drawing. Refer to architectural drawings for length of continuous runs. 2. Contractor shall field verify each run lengh prior to ordering. 3. Contractor to provide optimal combination of lengths as necessary to complete runs. Allow no more than 4" free space at either end of run. 4. Provide single switch per run. 5. Fixture shall be ordered with necessary power supplies, drivers, quick connects and power feeds for installation of a complete system. 6. Contractor shall coordinate mounting with millwork details. 7. Provide cabinet fascia to conceal view of undercabinet light fixture.
F8	Surface mounted linear LED strip concealed within architectural cove at base of wall.	Under gallery wall	Luminii-Kendo 45M K45M-*LENGTH*-29K-SO-H-F-WH-B-*POWER FEED as required LL2.4-H-29k-length-Section Start-Section End	LED Power LED Linear	White	~2.4W/ft LED module 315 Lumens/ft 2900K + 75K CCT 80-91 CRI	Remote Electronic Power Supply Primary: 120V Secondary: 24V Input Watts: 3.2W/ft	1. Contractor to verify and coordinate fixture installation and mounting with architectural details, housing type, field conditions, and millwork details. 2. Refer to architectural drawings for length of continuous runs and for mounting details. Contractor shall field-verify each run length prior to ordering. Contractor to provide lengths as necessary to complete runs. Allow no more than 2" free space at either end of run. 4. Overlap fixture lens with aluminum extrusion to keep extrusion aligned whenever extrusions are installed in a continuous run with multiple extrusion units. 5. Locate remote power supplies in a secure, concealed, accessible and well ventilated location in compliance with manufacturer's recommendations. 6. Contractor & manufacturer to coordinate power supply size and wire gauge to limit voltage drop to ≤2% over entire length of run. 7. Contractor to coordinate conduit entry based on final fixture details and architectural conditions and to provide lead cables and quick connects as required.
Existing	Existing Pendant fixture to be refurbished	Open Area Multipurpose				Lamping to be determined 82+ CRI LED or Compact FL	Electronic ballasts to be coordinated by Contractors per existing conditions and Arch. Dwgs.	1. Contractor to coordinate wiring with existing fixtures and mounting conditions. 2. Fixtures to be rewired and UL listed to current requirements. 3. Contractor to advise lighting designer of condition of existing luminaires upon which a lamping recommendation is to be made. Contractor to allow for time to install at least three lamp samples for review. 4. Contractor to clean fixtures and to ensure that fixtures are in operable conditions. 5. Contractor to advise Engineer before refinishing fixture.
FX1	Exterior wall surface mounted downlight with "RLM" shade	East and North Exterior	Baselite W518-49-42WCFL-PR4-WM15 Remote emergency ballast per electrical spec.	Spectrum Lighting Pace Illumination	49 Galvanized	42WCFL Osram Sylvania: CF42DT/E/IN830/ECO	Integral electronic HPF ballast	1. Contractor to coordinate mounting with existing conditions per Arch. Dwgs. Fixtures on East side are being mounted at existing locations, contractor to coordinate wiring requirements. 2. Contractor to coordinate wiring, remote emergency ballasts and locations with Electrical Engineer and Electrical Drawings. 3. Fixture to be UL listed and labeled suitable for wet locations.
FX2	Surface mounted linear LED strip light with internal matte black louvers mounted at Architectural canopy.	Exterior Canopy	Electrix L140W-10-length-W3-60M-V-cables-custom color PS96-W		Custom Exterior Marine Grade Paint TBD by Engineer	10W/ft LED module 516 Lumens/ft 3000K	Remote Electronic Power Supply 120V Input Watts: 10W/ft	1. Exterior grade custom paint to be selected by Engineer. Paint finish shall be marine grade. 2.Contractor to coordinate remote power supply at accessible and ventilated locations. 3. Refer to architectural drawings for length of continuous runs. Contractor shall field-verify each run length prior to ordering. 4. Contractor to provide leader feed cables as required for a complete installation. 5. Fixture to be UL listed and labeled suitable for wet locations. 6. Locate remote power supplies in a secure, concealed, accessible and well ventilated location in compliance with manufacturer's recommendations. 7 Contractor & manufacturer to coordinate power supply size and wire gauge to limit voltage drop to ≤2% over entire length of run. 8. Contractor to coordinate conduit entry based on final fixture details and architectural conditions.
FX3	Surface mounted IP68 rated submersible adjustable LED linear light within Architectural details.	Below glass floor	Boca Flasher-HPNLS-Lo HPNLS-Lo8-3000K-120V+D73*-A-W-S-D-SI		Marine grade painting for salt water submersion	~13W/ft LED module ~372 Lumens/ft 3000K + 75K CCT 90+ CRI	Integral Electronic Power Supply 120 or 277 Input Watts: 17W/ft	1. Provide marine grade paint finish for salt water submersion. Fixture IP68 rated up to 6 hour water immersion. Manufacturer to provide documentation for Owner's record. 2. Contractor to verify and coordinate fixture installation and mounting with architectural details, housing type, field conditions, and ceiling details. 3. Refer to architectural drawings for length of continuous runs. Contractor shall field-verify each run length prior to ordering. 4. Fixture is mounted under the glass floor where water submersion for long periods of time is possible. Provide mounting and electrical components as required.

Type	Description	Location	Mfr / Catalog No.	Alternates	Finish	Lamping	Electrical Data	Notes

GENERAL NOTES:

1. Provide all lighting fixtures as shown complete with all lamps, completely wired, controlled and securely attached to supports.
2. Where both narrative and/or pictorial fixture descriptions are provided, the written description shall take precedence and prevail.
3. The lighting fixtures and workmanship must be in accordance with and meet the standards and regulations of the following: a.) Underwriters Laboratories b.) National Electric Code c.)Local Building and Life Safety Code Agencies.
4. All fixtures and workmanship shall be guaranteed free of defects and fully operational for a minimum of one year after the acceptance of the project by the Owner. Any fixtures or workmanship (excluding lamps) found to be defective during the warranty period will be either fixed or replaced by the Contractor at no cost to the Owner.
5. Locations of fixtures are shown diagrammatically. Verify exact location and spacing with Plans and designer at the site during installation. Notify Owner about field conditions at variance with Contract Documents before commencing installation.
6. Provide adequate and sturdy support for each lighting fixture. Contractor shall be responsible for verifying weight and mounting method of all fixtures and furnish and install suitable supports. Fixture mounting assemblies shall comply with all local seismic codes and regulations.
7. At the completion of construction, clean lenses and reflectors of all lighting fixtures so as to render them free of any material, substance or film foreign to the fixture. Blemished, damaged, or unsatisfactory fixtures shall be replaced in a satisfactory manner.
8. Replace all burned-out or inoperative lamps, and inoperative ballasts in all fixtures before the building is accepted by the Owner so that all lighting fixtures will be in first class operating condition.
9. Contractor to review existing circuiting, verify new loads and panel capacity. Contractor shall notify Owner if a conflict between design documents and field conditions occur.
10. Electronic Program/Rapid Start linear fluorescent ballasts shall have parallel lamp wiring and anti-striation circuiting.
11. Contractor to verify compatibility of lamp/ballast/transformer and dimming system.
12. For all fixtures that are dimmed refer to electrical drawings for information on controls and dimming requirements. Provide appropriate dimming system based on load type. Contractor to provide all required components for a fully functioning system.
13. Contractor to provide line item pricing per fixture type with labor and installation shown as line items.
14. Refer to electrical drawings for Voltage information.
15. Per section 16510 Part III/U: For all adjustable fixtures provide labor and materials for final aiming and locking of all adjustable fixtures under the Engineer's supervision. Aiming shall take place immediately before building is turned over to Owner, after regular working hours where required.
16. All fixtures with replaceable integral ballasts/power supplies to be provided with ballast/power supply disconnects for safe access to "hot" fixture.
17. Provide manufacturer's shop drawings showing all materials, finishes, lengths and components for Lighting Designer and Engineer review prior to fabrication. Contractor to provide fully functioning fixtures and components.

END OF SECTION 26 50 00

BEAM4 RECESSED MOUNT

ÉCLAIRAGE axis LIGHTING
1.800.263.AXIS
[T] 514.948.6272
[F] 514.948.6271
www.axislighting.com

PROJECT INFORMATION

Project:

Type:

Notes:

DIMENSIONS

SECTION VIEWS

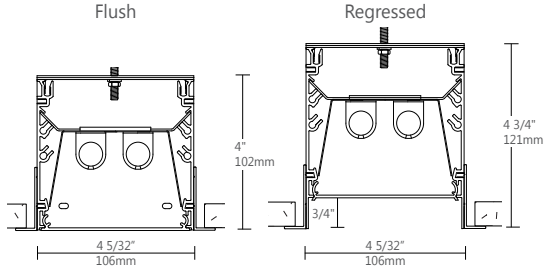

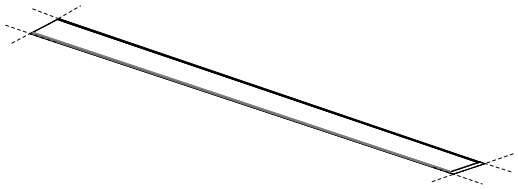

SHOWN WITH LENS OPTION

ORDERING CODE

1	2	3	4	5	6	7	8	9	10	11	12	13	14	15	16	17

PRODUCT SPECIFICATIONS

1	PRODUCT ID	2	OPTICS DIRECT	3	OPTICS POSITION	4	LENGTH/FT	5	SPECIFY LENGTH	6	LAMP
BBR	recessed	**S**	satin lens	**FL**	flush	**2**	2′	**NL**	nominal (3′ & 4′ lamps)	**T5**	T5
		F	frosted lens(1)	**RG**	regressed(2)	**3**	3′	**NL4**	nominal (4′ lamps only)	**T5HO**	T5HO
		PL	semi spec. para. louvers			**4**	4′	**EX**	exact (3′ & 4′ lamps)	**T8**	T8(3)
		SB	white solid baffles			**5**	5′	**EX4**	exact (4′ lamps only)		
		B	blank			**6**	6′				
						8	8′				
						12	12′				
						S#	System Run				
			(1) not recommended with staggered lamping		(2) Satin/frosted lens only						(3) requires 4 3/4" housing for t-bar

7	LAMP CONFIGURATION	8	MR	9	FINISH	10	VOLTAGE	11	BALLAST	12	CIRCUITS
0	0 lamp	**M16#**	MR 16 halogen	**W**	white	**120**	120V	**D**	dimming	**1**	1 regular
1	1 lamp	**M16LED#**	MR 16 LED	**C**	custom	**277**	277V	**E**	instant start	**2**	2 regular
2	2 lamps					**347**	347V(4)	**ERS**	rapid start	**2A/B**	2 alternating
+S	staggered					**UNV**	universal	**T**	step dimming(5)	**+E#**	emergency section
										+NL#	night light section
										+GTD#	generator transfer device
										+M	MR
			Add 9" per lamp				(4) Please consult factory		Use ballast guide for ballast specification (5) In T5HO, only available for 2x4′ lamp configuration		

13	MOUNTING/SUSPENSION	14	BATTERY	15	OTHER	16	IC CONTROLS	17	CUSTOM
TB9	t-bar 9/16"	**B#**	battery pack 4′ sections	**F**	fuse	**DS#**	daylight sensor	**C**	custom
TB15	t-bar 15/16"			**EF**	end feed	**OS#**	occupancy sensor		
ST	screw slot t-bar			**FW#**	flex whip (6′ std)	**DS+OS#**	daylight+occupancy sensor		
TG9	tegular 9/16"			**CP**	Chicago plenum	**DOS#**	daylight&occupancy sensor		
TG15	tegular 15/16"								
DF	drywall flange								
D	drywall flangeless								
DB	slip-through bracket								
DS	drywall spackle flange								
							See integrated controls guide for further details		Please specify

Ballast, Battery Pack and Integrated Control Details and Custom Description:

FILE NAME:BBR.SPEC January 28, 2013

Product design and development is an ongoing process at Axis Lighting. We reserve the right to change specifications. Contact Axis for the latest product information. © 2011 Axis Lighting Inc.

Project: IERBYS

Project #: 12141

Date: 27 March 2013
265000
Final Construction Documents

Type: F1

LIGHTING CONTROL CUT SHEET Note: This document is for information only. Refer to specifications for all catalog numbers, etc.

Horton Lees Brogden Lighting Design 8580 Washington Blvd Culver City CA 90232 310 837 0929 voice | 310 837 0902 fax www.HLBlighting.com

05/03/13 PERMIT SET

BEAM4 RECESSED MOUNT

ÉCLAIRAGE axis LIGHTING
1.800.263.AXIS
[T] 514.948.6272
[F] 514.948.6271
www.axislighting.com

CONSTRUCTION

Housing	Extruded Aluminum (0.075'' nominal) up to 70% Recycled Content
End Cap	Sheet Steel (18 ga)
Interior Brackets	Die Formed Sheet Steel (18 ga)
Reflectors	White Powder Coated Sheet Steel (22 ga)
Louvers	Die Formed Semi-Specular Aluminum (22 ga)
White Louvers	Die Formed Aluminum Painted White (22 ga)
Blank	Extruded Aluminum (0.075'' nominal)
Lenses	Extruded Acrylic (0.070'' nominal) Satin: 68% trans. Frosted: 85% trans.
T-Bar Bracket	Die Formed Sheet Steel (16 ga)
Screw Slot T-Bar Bracket	Die Formed Sheet Steel (16 ga)
Slip-Through Bracket	Die Formed Sheet Steel (18 ga)
Spackle Flange	Die Formed Perforated Sheet Steel (20 ga)
Flange	Extruded Aluminum (0.075'' nominal) visible flange width: 9/16"

WEIGHT

4 ft	14.5 lbs / 6.6 kg
8 ft	29.0 lbs / 13.2 Kg
12 ft	43.5 lbs / 19.7 Kg

SYSTEM (S#)

BEAM 4 linear systems, with the use of a strong profile, allow for a nearly hair thin connection system of continuous runs.
Lengths of 4', 8', 12' as well as custom lengths are available.
Runs of BEAM 4 that are greater than 12ft in length are designated as systems (S#). This means that the run is comprised of a combination 4ft, 8ft and/or 12ft sections to be assembled on site using our joining system. For more information on systems and joining, please refer to the BEAM installation sheets available for download at www.axislighting.com.

ELECTRICAL

Ballast	Electronic IS, Electronic Rapid Start, Dimming (0-10V, Line, Step, EcoSystem, DALI) with preinstalled ballast disconnect as per NEC & CEC
Emergency	Emergency battery pack or emergency circuit
Voltage	120V, 277V, 347V, UNV

Incorporating these components may have limitations or effect the length of the luminaire, please contact factory for more details.

FINISH

Powder Coated and custom finishes are also available.

APPROVALS

Certified to UL and CUL standards
Meets NYC requirements
Meets CCEC requirements (Chicago plenum)

JOINERS

In order to allow very long runs of BEAM luminaires, Axis has developed a number of different joining systems.
Special care has been taken to maximize the performance of the joiner for each BEAM option.

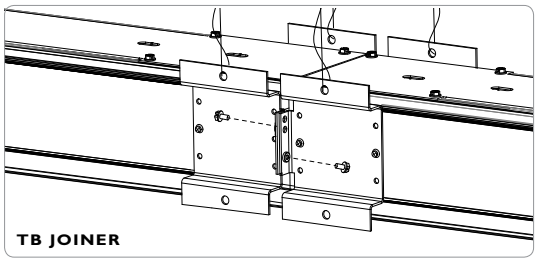

TB JOINER

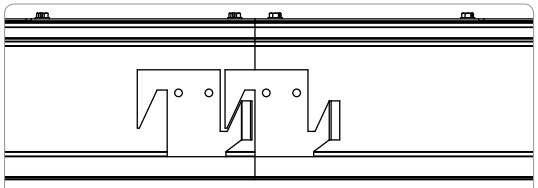

DRYWALL JOINER

NOTE: Hang each system segment individually.
Do not assemble system prior to hanging.

STAGGERED LAMPING

When the BEAM 4 is used in continuous runs longer than 4', staggered lamping can be used to eliminate the appearance of socket shadows at the ends of the lamps. The BEAM 4 uses a staggered overlap of 4 different bracket lengths (3.5", 4", 4.5" and 5"), along with 3' and 4' lamps, allowing us to match almost any row length requirements with optimal results. For example 3 x 3' T5 lamps can be used to completely illuminate the lens of an 8' luminaire.

LAMP TYPE	T5	T5HO	T8
1 lamp	•	•	•
2 lamps	•	•	•

Staggered 1 Lamp

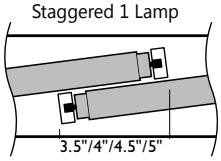

Staggered 2 Lamps

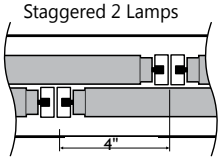

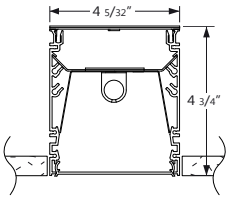

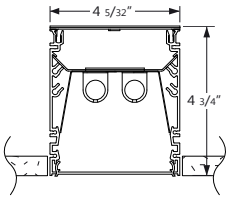

FILE NAME:BBR.SPEC January 28, 2013

Product design and development is an ongoing process at Axis Lighting. We reserve the right to change specifications. Contact Axis for the latest product information. © 2011 Axis Lighting Inc.

Project: IERBYS
Project #: 12141

Date: 27 March 2013
265000
Final Construction Documents

Type: F1

LIGHTING CONTROL CUT SHEET Note: This document is for information only. Refer to specifications for all catalog numbers, etc.

BEAM4 RECESSED MOUNT

ÉCLAIRAGE axis LIGHTING
1.800.263.AXIS
[T] 514.948.6272
[F] 514.948.6271
www.axislighting.com

OPTICS

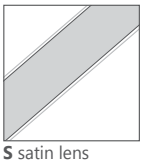
S satin lens

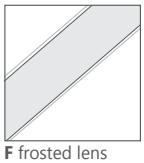
F frosted lens

SATIN & FROSTED LENS
(acrylic snap-in lens)
satin: 68% trans.
frosted: 85% trans.

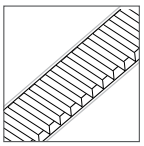
PL semi-specular parabolic louvers

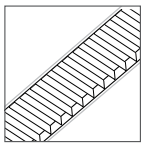
SB white solid baffle

LOUVERS
(semi-spec. parabolic louver/white solid baffle)
9/16'' deep blades – 5/8'' spacing
72 blades per 4'

CORNERS

Unlit Corners - BEAM4 features a multitude of layout patterns with the use of a number of corners, 90° corner, T or X junctions.

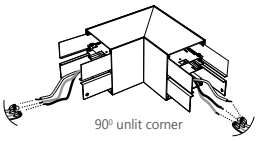
90º unlit corner

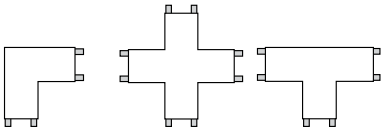
90° corner X junction T junction

Lit Corners - In addition Axis offers Lit 90° Corners including Ceiling to Ceiling, Wall to Ceiling and Ceiling to Wall.

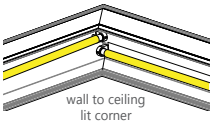
wall to ceiling lit corner

For custom corner angles, please consult factory. Specifications sheets for all corners are available at: www.axislighting.com

MR16

Blank	Extruded Aluminum (0.075'' nominal)
MR16 Halogens	2.0'' diameter (35W / 50W)
MR16 LED	2.0'' diameter
Quantity	For every 4' fluorescent lamp section, there may be up to a maximum of 4 x MR16 lamps.
Spacing	Each MR16 is placed centered on a blank section 9'' in length.

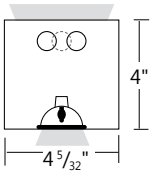

For a series of MR16's within a given section length, they will be spaced evenly on a longer blank section.
The directed light of MR16 Halogen lamps are fixed downward.
Custom spacing may be available on special request.

Between fluorescent lamps sections

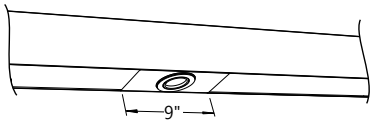

At luminare ends

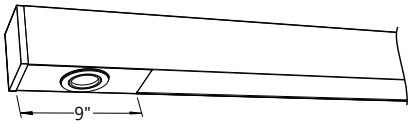

Several in a long blank section

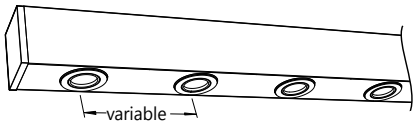

Product design and development is an ongoing process at Axis Lighting. We reserve the right to change specifications. Contact Axis for the latest product information. © 2011 Axis Lighting Inc. Page: 3 / 9

Project: IERBYS
Project #: 12141
Date: 27 March 2013
265000
Final Construction Documents
Type: F1

LIGHTING CONTROL CUT SHEET Note: This document is for information only. Refer to specifications for all catalog numbers, etc.

BEAM4 RECESSED MOUNT

ÉCLAIRAGE axis LIGHTING
1.800.263.AXIS
[T] 514.948.6272
[F] 514.948.6271
www.axislighting.com

TB CEILING MOUNTING OPTIONS

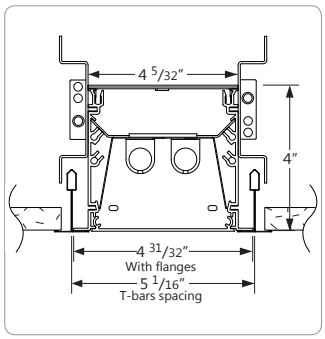

TB15 15/16" T-BAR

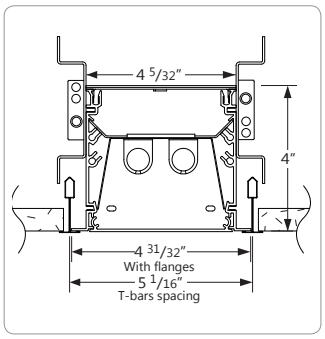

TB9 9/16" T-BAR

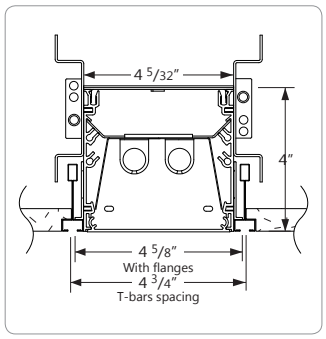

ST SCREW SLOT T-BAR

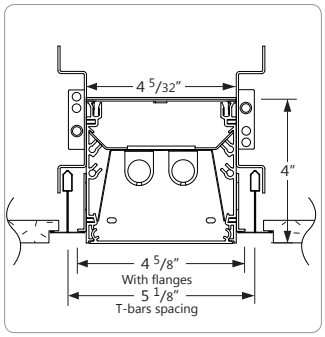

TG15 15/16" TEGULAR

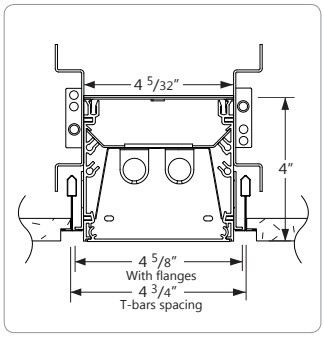

TG9 9/16" TEGULAR

DRYWALL CEILING MOUNTING OPTIONS

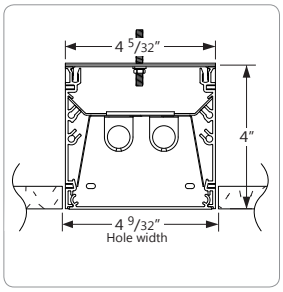

D FLANGELESS WITH 1/4-20 STUD MOUNTING

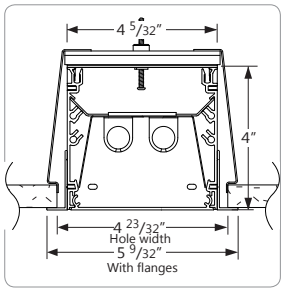

DB VISIBLE FLANGES WITH SLIP-THROUGH BRACKET

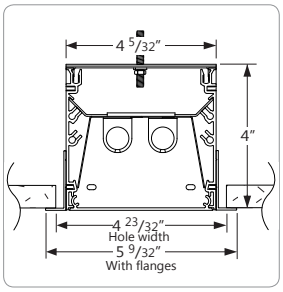

DF VISIBLE FLANGES WITH 1/4-20 STUD MOUNTING

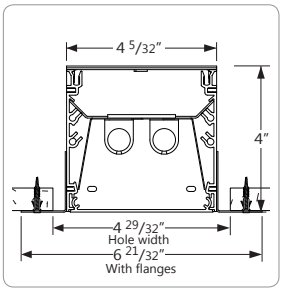

DS SPACKLE FLANGES

OTHER MOUNTING OPTIONS

BEAM 4 is also available with pendant, surface, wall, asymmetric, recessed wall and wall wash mounted options.

Specification sheets and Installation sheets for all mounting for BEAM luminaires are available for download at www.axislighting.com

Product design and development is an ongoing process at Axis Lighting. We reserve the right to change specifications. Contact Axis for the latest product information. © 2011 Axis Lighting Inc.

BEAM4 RECESSED MOUNT

ÉCLAIRAGE axis LIGHTING
1.800.263.AXIS
[T] 514.948.6272
[F] 514.948.6271
www.axislighting.com

INTEGRATED CONTROL OPTIONS

BEAM 4 luminaires allow the use of integrated controls such as daylight sensors (DS), occupancy sensors (OS), individual daylight sensors and occupancy sensors (DS+OS), and combination daylight/occupancy sensors (DOS). These options can be seamlessly integrated into our luminaires. The control system could be used to optimize the lighting of the space by reducing energy consumption through daylight harvesting and occupancy, thereby improving the overall interior environment and allowing for LEED credits.

- Consult factory for other options.
- Refer to IC brochure for more information.

SENSORS	BRAND	Model	TYPE	CODE	COMPATIBLE DIMMING BALLAST
Daylight Sensor (DS)	Lutron	EC-DIR-WH	Daylight	LD	EcoSystem
	Wattstopper	FD-301	Daylight	WD	0-10V
	Philips	Luxsense	Daylight	PL	0-10V
Occupancy Sensor (OS)	Wattstopper	FS-205	PIR Occupancy	WP1	Programmed Rapid Start
		FS-355	PIR Occupancy	WP2	Programmed Rapid Start
		FS-155	PIR Occupancy	WP3	Programmed Rapid Start
		FS-505	Ultrasonic Occupancy	WU1	Programmed Rapid Start
		FS-505C	Ultrasonic Occupancy	WU2	Programmed Rapid Start
		FM-105	High Frequency Occupancy	WH	Programmed Rapid Start
Daylight & Occupancy Sensors (DOS)	Philips	Actilume	Daylight & PIR Occupancy	PA	DALI or 0-10V

PHOTOMETRIC DATA

1 T5

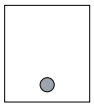

PHOTOMETRIC CURVE

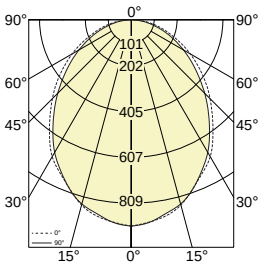

Test Lamp: 1xF28T5
IES FILE: BBR-F-FL-4-T5-1

Efficiency: 73.1%

CANDELA DISTRIBUTION

	Horizontal Angles					Zonal Lumens
Vertical Angle	0	22.5	45	67.5	90	
0	910	910	910	910	910	
5	896	910	896	902	898	48
15	846	842	844	845	842	203
25	745	743	745	736	736	321
35	629	626	615	608	603	381
45	492	485	477	463	459	376
55	363	355	343	329	326	326
65	240	234	226	216	211	246
75	134	130	124	114	111	153
85	45	42	36	32	31	63
90	6	4	2	2	1	

LUMINANCE DATA (CD/M2)

	Horizontal Angles		
Vertical Angle	0	45	90
45	5044	3029	2586
55	4436	2272	1867
65	3766	1608	1270
75	3084	986	725
85	2034	338	232

COEFFICIENTS OF UTILIZATION (%)

Ceiling	80				70				50		
Wall	70	50	30	10	70	50	30	10	50	30	10
0	87	87	87	87	85	85	85	85	81	81	81
1	80	77	74	71	78	75	72	70	72	70	68
2	73	67	62	58	71	66	61	58	63	60	56
3	67	59	54	49	65	58	53	49	56	52	48
4	62	53	47	42	60	52	46	42	50	45	41
5	57	48	41	37	55	47	41	36	45	40	36
6	53	43	37	32	51	42	36	32	41	36	32
7	49	39	33	29	48	39	33	29	38	32	28
8	46	36	30	26	45	35	30	26	35	29	26
9	43	33	27	23	42	33	27	23	32	27	23
10	40	31	25	21	39	30	25	21	30	25	21

Based on floor reflectance of 20

All IES files for other lamping are available for download at: www.axislighting.com

FILE NAME:BBR.SPEC January 28, 2013

Product design and development is an ongoing process at Axis Lighting. We reserve the right to change specifications. Contact Axis for the latest product information. © 2011 Axis Lighting Inc.

Project: IERBYS

Project #: 12141

Date: 27 March 2013
265000
Final Construction Documents

Type: F1

LIGHTING CONTROL CUT SHEET Note: This document is for information only. Refer to specifications for all catalog numbers, etc.

BEAM4 RECESSED MOUNT

ÉCLAIRAGE axis LIGHTING
1.800.263.AXIS
[T] 514.948.6272
[F] 514.948.6271
www.axislighting.com

PHOTOMETRIC DATA

2 T5

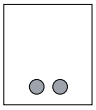

PHOTOMETRIC CURVE

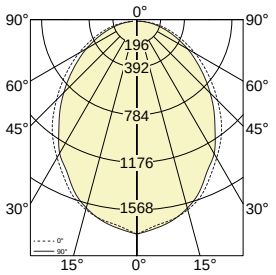

Test Lamp: 2xF28T5
IES FILE: BBR-F-FL-4-T5-2
Efficiency: 68.8%

CANDELA DISTRIBUTION

Vertical Angle	Horizontal Angles 0	22.5	45	67.5	90	Zonal Lumens
0	1764	1764	1764	1764	1764	
5	1702	1709	1708	1701	1724	92
15	1616	1590	1593	1595	1602	385
25	1422	1406	1412	1385	1369	609
35	1202	1185	1156	1135	1120	717
45	939	920	896	869	854	709
55	682	668	637	615	604	609
65	452	441	420	397	388	459
75	253	246	229	216	204	287
85	88	79	66	60	57	118
90	11	8	4	3	3	

LUMINANCE DATA (CD/M2)

Vertical Angle	Horizontal Angles 0	45	90
45	9628	5695	4816
55	8328	4217	3462
65	7089	2993	2336
75	5803	1828	1339
85	3946	621	421

COEFFICIENTS OF UTILIZATION (%)

Ceiling	80				70				50		
Wall	70	50	30	10	70	50	30	10	50	30	10
0	82	82	82	82	80	80	80	80	77	77	77
1	75	72	69	67	73	71	68	66	68	65	64
2	69	63	59	55	67	62	58	54	60	56	53
3	63	56	51	46	61	55	50	46	53	49	45
4	58	50	44	40	56	49	44	39	47	43	39
5	53	45	39	34	52	44	38	34	43	38	34
6	50	41	35	30	48	40	34	30	39	34	30
7	46	37	31	27	45	36	31	27	35	30	27
8	43	34	28	24	42	33	28	24	33	28	24
9	40	31	26	22	39	31	26	22	30	25	22
10	38	29	24	20	37	29	23	20	28	23	20

Based on floor reflectance of 20

1 T5

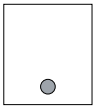

PHOTOMETRIC CURVE

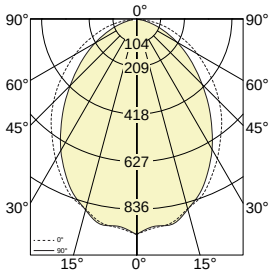

Test Lamp: 1xF28T5
IES FILE: BBR-F-RG-4-T5-1

Efficiency: 69.7%

CANDELA DISTRIBUTION

Vertical Angle	Horizontal Angles 0	22.5	45	67.5	90	Zonal Lumens
0	940	940	940	940	940	
5	915	914	917	910	908	49
15	858	870	866	865	861	208
25	767	766	758	737	737	328
35	639	640	611	584	573	380
45	512	499	460	421	408	367
55	373	358	315	279	270	306
65	249	229	190	163	153	219
75	138	118	87	69	65	123
85	38	25	20	20	20	41
90	2	3	2	2	2	

LUMINANCE DATA (CD/M2)

Vertical Angle	Horizontal Angles 0	45	90
45	4283	2409	1905
55	3704	1716	1282
65	3148	1112	766
75	2504	569	353
85	1315	157	120

COEFFICIENTS OF UTILIZATION (%)

Ceiling	80				70				50		
Wall	70	50	30	10	70	50	30	10	50	30	10
0	83	83	83	83	81	81	81	81	78	78	78
1	77	74	71	68	75	72	70	67	69	67	65
2	70	65	61	57	69	64	60	56	61	58	55
3	65	58	52	48	63	57	52	48	55	50	47
4	59	52	46	42	58	51	45	41	49	44	41
5	55	47	41	36	54	46	40	36	44	39	36
6	51	42	36	32	50	42	36	32	40	35	32
7	47	38	33	29	46	38	32	28	37	32	28
8	44	35	30	26	43	35	29	26	34	29	25
9	42	33	27	23	41	32	27	23	31	27	23
10	39	30	25	21	38	30	25	21	29	24	21

Based on floor reflectance of 20

All IES files for other lamping are available for download at: www.axislighting.com

Product design and development is an ongoing process at Axis Lighting. We reserve the right to change specifications. Contact Axis for the latest product information. © 2011 Axis Lighting Inc.

SORAA® VIVID LED MR16 3000K 12VAC

Narrow Flood and Flood

Spot

POWERED BY GaN ON GaN™ TECHNOLOGY

Soraa's VIVID LED MR16 is the leader in next-generation high CRI LED lamps. The VIVID lamp's unprecedented perfect spectrum light, CRI of 95, R9 of 95, rich saturated color rendering, bright white rendering, and excellent color stability makes it the only choice for demanding display applications. Powered by Soraa's GaN on GaN™ technology, VIVID lamps match or exceed halogen MR16 performance, in color, output, energy efficiency, and ROI. VIVID lamps are revolutionizing lighting design, and with their unique single source optics deliver the best color and white rendering, beam definition, and crisp shadows available in directional light sources

PERFORMANCE

CBCP matches standard halogen lamps

Single light source

Single crisp shadow

Dimmable to 20%

Power Factor: 0.93

12V (10.8 min, 13.2 max)

COLOR

CCT: 3000K

CRI>95, R9 95

White point accuracy within 3 SDCM

Rich saturated color rendering

Excellent color stability

OPTIMIZED FORM

ANSI standard MR16 form factor: 1.96" (50mm) W x 1.86" (47.6mm) H

Compatible with standard fixtures

Weight: 40g

Proprietary fanless aluminum design provides superior thermal dissipation

HIGHLY COMPATIBLE

Works with magnetic and electronic transformers and dimmers (see complete list at www.soraa.com)

UL and CUL listed for use with 12VAC NEC Class 1 and Class 2 systems

LONG LIFE, LOW MAINTENANCE

Lifetime of 25,000 hours, L70

Three year warranty

ENERGY EFFICIENT

Saves over 75-80% of energy compared to standard halogen lamps

Typical payback of one year or less

INTENDED USE AND APPLICATIONS

LED retrofit lamp to replace 12VAC halogen MR16 lamps in recessed downlights, track lighting, and other indoor applications

For use in recessed downlights, track lighting and other indoor applications. Not for use with glass lenses or fully sealed fixtures

Not for use in non-ventilated fixtures less than 3"L x 3"W x 3"H.

Not for use in Emergency Fixtures or Exit Signs

Operating Temperature: Minimum-40°C (ambient); Typical: 80-110°C (base); Maximum: 120°C (base)

Soraa lamps are designed to safely shut down due to conditions in any thermal environment not conducive to minimum airflow or proper ventilation

CERTIFICATIONS

UL, CUL for 12VAC NEC Class 1 and Class 2 systems, FCC 47 CFR Part 15 and Part 18 (EMI), RoHS, CE, C-tick

12VAC
GU-5.3
3000K
CRI >95
R9 >95
DIM
RoHS
2012 PROGRESS Report SELECTION

SPECIFICATIONS*

Reference Number	Part Number	Product Code	Beam	Field	CBCP	Watts	Halogen Equivalent
MR16-40-B01-12-930-14	MR16-AB1-A1-930-10T-14-S1	00133	14°	27°	3250	10.4	35w
MR16-50-B01-12-930-20	MR16-AA1-A1-930-122-20-S1	00061	20°	38°	2100	12.2	40w
MR16-50-B01-12-930-25	MR16-AA1-A1-930-122-25-S1	00085	25°	42°	1900	12.2	40w
MR16-50-B01-12-930-36	MR16-AA1-A1-930-122-36-S1	00109	36°	60°	1075	12.2	40w

*at stable warm operating conditions (25°C ambient)

Form Factor — Base — Voltage — CRI — CCT — Beam

MR16 - 30 - B01 - 12 - 9 30 - 25

The diagram at left shows how to read the different components of the reference number. Base type BO1 refers to the GU 5.3 base.

Project: IERBYS

Project #: 12141

Date: 27 March 2013
265000
Final Construction Documents

Type: F1

LIGHTING CONTROL CUT SHEET Note: This document is for information only. Refer to specifications for all catalog numbers, etc.

SORAA VIVID LED MR16 3000K 12VAC

PHOTOMETRICS

Spot - 14°

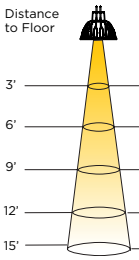

Distance to Floor	Beam Dia. (50% CBCP)	Foot-candles on Floor
3'	.7'	361
6'	1.5'	90
9'	2.2'	40
12'	2.9'	23
15'	3.7'	14

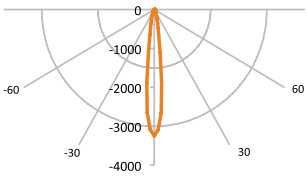

Narrow Flood -20°

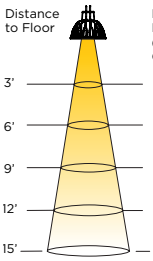

Distance to Floor	Beam Dia. (50% CBCP)	Foot-candles on Floor
3'	1.1'	233
6'	2.1'	58
9'	3.2'	26
12'	4.2'	15
15'	5.3'	9

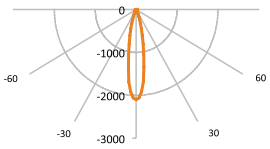

Narrow Flood -25°

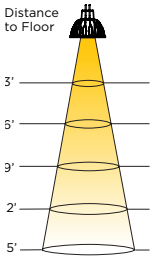

Distance to Floor	Beam Dia. (50% CBCP)	Foot-candles on Floor
3'	1.3'	211
5'	2.7'	53
9'	4'	23
2'	5.3'	13
5'	6.7'	8

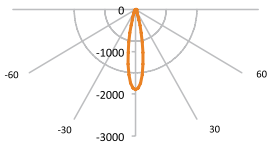

Flood -36° Degree

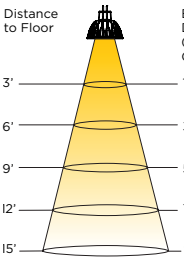

Distance to Floor	Beam Dia. (50% CBCP)	Foot-candles on Floor
3'	1.9'	119
6'	3.9'	30
9'	5.8'	15
12'	7.8'	8
15'	9.7'	5

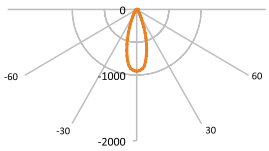

COLOR RENDERING

CRI- Relative R Values

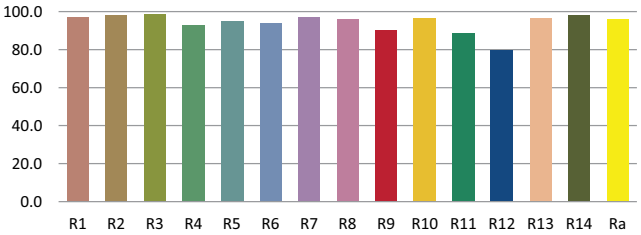

Comparative Spectra

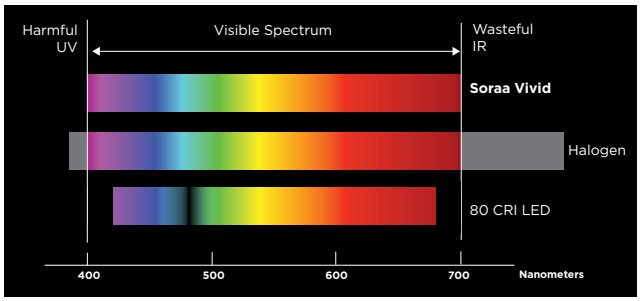

DIMENSIONS

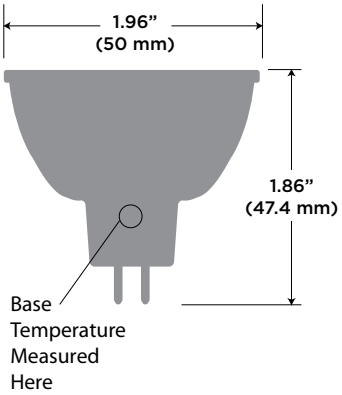

SAFETY NOTE ON HEAT

Soraa's unique LED technology allows its lamps to operate effectively and efficiently at higher temperatures than other LED lamps, resulting in more light output per diode. Although Soraa's lamps operate at cooler temperatures than halogen lamps, it is recommended that gloves be worn when handling bare lamps that have been energized.

TRANSFORMER/DIMMER COMPATIBILITY

Dimmable to 20% or lower, depending on dimmer. Complete transformer and dimmer compatibility information at www.soraa.com.

Information and specifications subject to change. 3.11.13 Rev A D-110125

Soraa Inc. 6500 Kaiser Drive, Fremont, CA 94555
510 456 2227 www.soraa.com

Project: IERBYS

Project #: 12141

Date: 27 March 2013
265000
Final Construction Documents

Type: F1

LIGHTING CONTROL CUT SHEET Note: This document is for information only. Refer to specifications for all catalog numbers, etc.

LN10RAT / LN10RAL-20W

NANOLED® NXT

40° Adjustable Trim Round
1 7/8" Regress

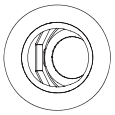

Plan View

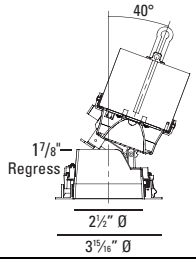

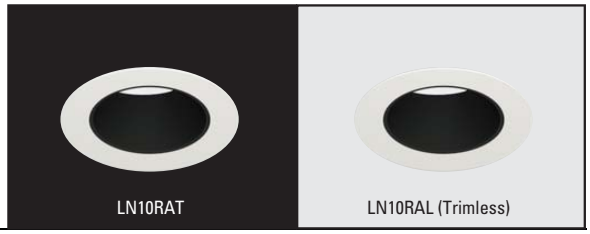

LUMINAIRE INFORMATION

LIGHT ENGINE DELIVERED PERFORMANCE

NanoLED NXT ADJUSTABLE	20 Watts	
	80+ CRI	90+ HIGH CRI
Lumens per Watt	46	38
Source Lumens	1250	1025
Delivered Lumens	952	780
Center Beam Candle Power 10°	8725	7000

High power white LED tightly binned for fixture-to-fixture color consistency within a 2-Step MacAdam Ellipse.

MATERIALS:
Trim: Precision die cast body with durable UV-stabilized powder coating.
Reflector: Interchangeable tool-less reflector system allows for flexibility while maintaining design consistency.
Available in 10° and 25° distribution.
Trim Lens: Solite
Baffle Options: High temperature nylon.
BM - Black Matte Baffle
WM - White Matte Baffle
BV - Black Vertical Groove Baffle
WV - White Vertical Groove Baffle
BA - Black Alzak
MA - Matte Alzak

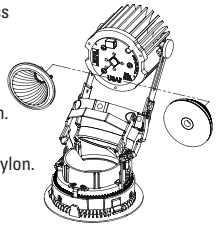

ADJUSTMENT:
True Hot Aiming with center beam optics is adjustable with 1/8" Allen screw driver. Simple recessed angled screws enable adjustment of vertical aiming and horizontal rotation from below, without trim removal. 362° locking horizontal rotation, with 0° - 40° locking vertical tilt.

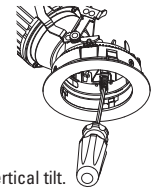

RATED LIFE: Based on IESNA LM80-2008
50,000 hours at 70% lumen maintenance (L70).

COLOR TEMPERATURE

Standard CRI	High CRI
2700K - 82+ CRI +/- 50K	2700K - 90+ CRI
3020K - 82+ CRI +/- 50K	3050K - 90+ CRI
3450K - 80+ CRI +/- 60K	

HEATSINK:
Proprietary high performance aluminum heatsink for maximum LED life.

DRIVER: Field Replaceable
Solid state electronic. Constant current. High power factor. Specify 120V or 277V. Driver complies with IEEE C62.41 surge protection.

DIMMING: (optional)
Multiple dimming drivers available.
See compatibility chart attached.

ACCESSORY HOLDER:
360° rotating, "D" size accessory holder.
Maxium 2 lenses.

AIMING MEMORY FEATURE:
Unique patent-pending vertical and horizontal aiming memory feature allows users to remove trim for reflector or accessory change without disturbing the set and locked lamp position. Trim is also keyed to housing to maintain aiming position.

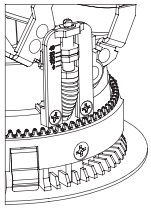

CEILING CUT OUT:
3 1/2" Ø

LISTINGS:
Dry/Damp
IBEW union made.

NOTES:
- Maximum ceiling thickness up to 1 1/2"
  See housing matrix on back for exceptions.
- Housing included with trim.
- Trimless for drywall installation only
- Trimless not available in acoustical ceilings.
- Fixture should be installed in applications where ambient temperatures do not exceed 40°C during normal operation.
- **5 year warranty**
- Interior use only.

ADJUSTABLE TRIM FEATURES

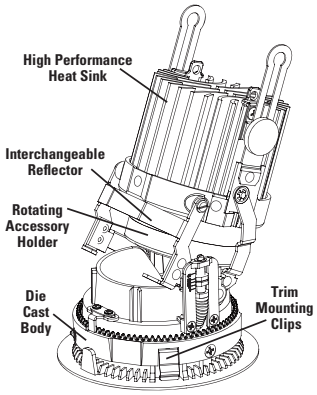

HOW TO SPECIFY

Trim	Baffle Options	Light Engine	Color Temperature	Reflector	Trim Finish	Housing	Voltage	Accessories
(Trim) **LN10RAT** (Trimless) **LN10RAL**	**BM** - Black Matte Baffle **WM** - White Matte Baffle **BV** - Black Vertical Groove Baffle **WV** - White Vertical Groove Baffle **MA** - Matte Alzak **BA** - Black Alzak	**MTG114** - (14W LED) **MTG120** - (20W LED)	**Standard CRI 80+** **27KS** - 2700K-82 CRI **30KS** - 3020K-82 CRI **35KS** - 3450K-80 CRI **High CRI 90+** **27KH** - 2700K-90 CRI **30KH** - 3020K-90 CRI	**LRNT410** - 10° Distribution **LRNT425** - 25° Distribution	**10** - White **21** - Black **28** - Metalized Grey **RAL** - Special Color	**LNC61** **LNC63** **LNC65** **LIC1** **LIC3** **LIC5** **LCP1** **LCP3** **LCP5**	**120V** **277V** **HOUSING DETAILS next page**	**CB27** - 27" C-Channel **CB52** - 52" C-Channel **DIML2**- 0-10V Low Voltage 15% Dimming Driver **DIML3**- Lutron Hi-lume LED / A-Series 2-wire Foward Phase (with neutral) 1% Dimming Driver. **120V Only.** **DIML4** - Lutron Hi-lume LED / A-Series 3-wire Fluorescent or EcoSystem 1% Dimming Driver **EML** - Emergency lighting battery pack w/ remote test switch. **Above ceiling access required for service** **EML not for use with IC/Airtight Housing**

BOFD - Borocilate Frosted
LLFD - Linear Spread Frosted Low Iron
SOFD - Solite Frosted
PRFD- Prismatic Frosted
HEXD- 1/8" Hex Cell Louver

LENSES and Louver

USAI®
www.usailighting.com
info@usailighting.com
1126 River Road
New Windsor, NY 12553
T 845–565–8500
F 845–561–1130

©2012. USAI, LLC.
All rights reserved.
All designs protected by copyright.
Revised 07/31/2012

Project: IERBYS

Project #: 12141

Date: 27 March 2013
265000
Final Construction Documents

Type: F2

LIGHTING CONTROL CUT SHEET Note: This document is for information only. Refer to specifications for all catalog numbers, etc.

NANOLED® NXT

Housings for use with
NanoLED Adjustable Trims - Round

LNC61, LNC63, LNC65
LIC1, LIC3, LIC5
LCP1, LCP3, LCP5

HOUSING FEATURES

- Easy adjustment aperture plate that allows ceiling thickness adjustment from 7/8" to 1 1/2". See housing matrix for details.
- Patent pending "Slide & Replace" easy driver replacement.
- Quick connectors on all wire connections.
- Universal housing style allows the ability to swap trim styles between Downlight, Adjustable and Wall Wash. See Plug-and-Play limitations on matrix below.
- Fabricated of 20 ga. black powder coated steel with thru wire J-box, 2 in 2 out at min. 90°C, #12 AGW thru branch circuit wiring.

DRIVER: (Field Replaceable)
Solid state electronic. Constant current. High power factor. Specify 120V or 277V.

DIMMING: (optional)
3 wire dimming driver available. See compatibility chart attached.

MOUNTING:
Butterfly brackets and adjustable nailer bars with integral nails provided. Nailer bars are extendible from 14" to 24" centers.

CEILING CUT OUT: 3 1/2" Ø

LISTINGS:
Dry/Damp
IBEW union made.

ENERGY STAR PARTNER

NOTES:
- Maximum ceiling thickness 1 1/2". See matrix for ceiling thickness options.
- Housing included with trim.
- Trimless for drywall installation only
- Trimless not available in acoustical ceilings.
- Fixture should be installed in applications where ambient temperatures do not exceed 40°C during normal operation.
- **5 year warranty**

HOUSING INFORMATION - See limitations below

New Construction

LNC61 - DL / ADJ / WW
(Max. Ceiling Thickness - 7/8")

LNC63 - DL / ADJ 30° / WW
(Max. Ceiling Thickness - 1 1/4")

LNC65 - DL / ADJ 20°
(Max. Ceiling Thickness - 1 1/2")

IC / Airtight

LIC1 - DL / ADJ / WW
(Max. Ceiling Thickness - 7/8")

LIC3 - DL / ADJ 30° / WW
(Max. Ceiling Thickness - 1 1/4")

LIC5 - DL / ADJ 20°
(Max. Ceiling Thickness - 1 1/2")

CP / Chicago Plenum - CCEA Approved

LCP1 - DL / ADJ / WW
(Max. Ceiling Thickness - 7/8")

LCP3 - DL / ADJ 30° / WW
(Max. Ceiling Thickness - 1 1/4")

LCP5 - DL / ADJ 20°
(Max. Ceiling Thickness - 1 1/2")

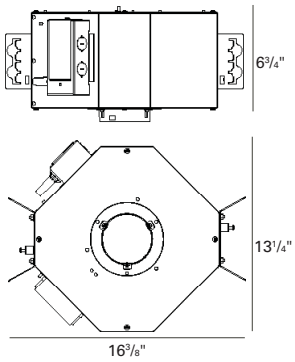

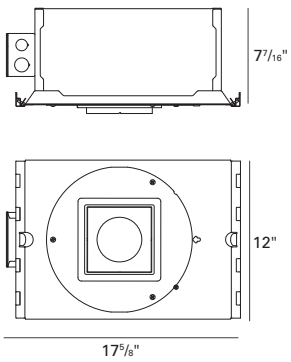

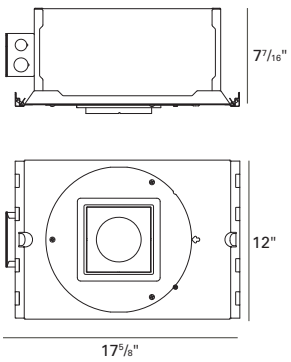

Order housings with trims on reverse side.

USAI®
www.usailighting.com
info@usailighting.com
1126 River Road
New Windsor, NY 12553
T 845–565–8500
F 845–561–1130

©2012. USAI, LLC.
All rights reserved.
All designs protected by copyright.
Revised 07/31/2012

Project: IERBYS
Project #: 12141

Date: 27 March 2013
265000
Final Construction Documents

Type: F2

LIGHTING CONTROL CUT SHEET Note: This document is for information only. Refer to specifications for all catalog numbers, etc.

LN10RAT / LN10RAL-20W

NANOLED® NXT

40° Adjustable Trim Round
1 7/8" Regress

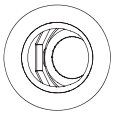

Plan View

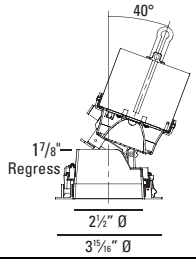

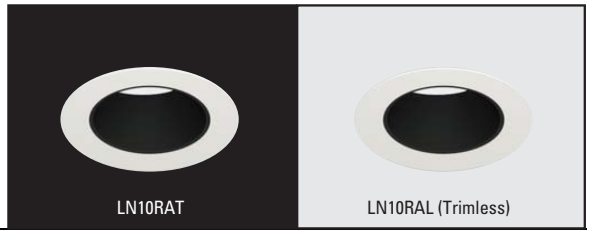

LUMINAIRE INFORMATION

LIGHT ENGINE DELIVERED PERFORMANCE

NanoLED NXT ADJUSTABLE	20 Watts	
	80+ CRI	90+ HIGH CRI
Lumens per Watt	46	38
Source Lumens	1250	1025
Delivered Lumens	952	780
Center Beam Candle Power 10°	8725	7000

High power white LED tightly binned for fixture-to-fixture color consistency within a 2-Step MacAdam Ellipse.

MATERIALS:
Trim: Precision die cast body with durable UV-stabilized powder coating.
Reflector: Interchangeable tool-less reflector system allows for flexibility while maintaining design consistency.
Available in 10° and 25° distribution.
Trim Lens: Solite
Baffle Options: High temperature nylon.
BM - Black Matte Baffle
WM - White Matte Baffle
BV - Black Vertical Groove Baffle
WV - White Vertical Groove Baffle
BA - Black Alzak
MA - Matte Alzak

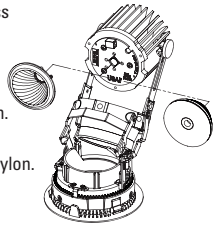

ADJUSTMENT:
True Hot Aiming with center beam optics is adjustable with 1/8" Allen screw driver. Simple recessed angled screws enable adjustment of vertical aiming and horizontal rotation from below, without trim removal. 362° locking horizontal rotation, with 0° - 40° locking vertical tilt.

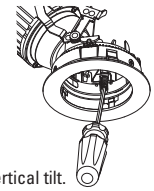

RATED LIFE: Based on IESNA LM80-2008
50,000 hours at 70% lumen maintenance (L70).

COLOR TEMPERATURE

Standard CRI	High CRI
2700K - 82+ CRI +/- 50K	2700K - 90+ CRI
3020K - 82+ CRI +/- 50K	3050K - 90+ CRI
3450K - 80+ CRI +/- 60K	

HEATSINK:
Proprietary high performance aluminum heatsink for maximum LED life.

DRIVER: Field Replaceable
Solid state electronic. Constant current. High power factor. Specify 120V or 277V. Driver complies with IEEE C62.41 surge protection.

DIMMING: (optional)
Multiple dimming drivers available.
See compatibility chart attached.

ACCESSORY HOLDER:
360° rotating, "D" size accessory holder.
Maxium 2 lenses.

AIMING MEMORY FEATURE:
Unique patent-pending vertical and horizontal aiming memory feature allows users to remove trim for reflector or accessory change without disturbing the set and locked lamp position. Trim is also keyed to housing to maintain aiming position.

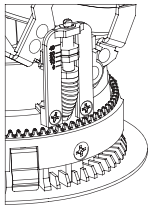

CEILING CUT OUT:
3 1/2" Ø

LISTINGS:
Dry/Damp
IBEW union made.

NOTES:
- Maximum ceiling thickness up to 1 1/2"
  See housing matrix on back for exceptions.
- Housing included with trim.
- Trimless for drywall installation only
- Trimless not available in acoustical ceilings.
- Fixture should be installed in applications where ambient temperatures do not exceed 40°C during normal operation.
- **5 year warranty**
- Interior use only.

ADJUSTABLE TRIM FEATURES

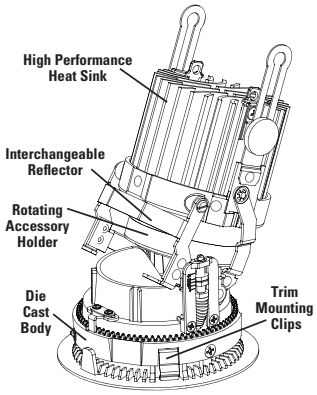

HOW TO SPECIFY

Trim	Baffle Options	Light Engine	Color Temperature	Reflector	Trim Finish	Housing	Voltage	Accessories
(Trim) **LN10RAT** (Trimless) **LN10RAL**	**BM** - Black Matte Baffle **WM** - White Matte Baffle **BV** - Black Vertical Groove Baffle **WV** - White Vertical Groove Baffle **MA** - Matte Alzak **BA** - Black Alzak	**MTG114** - (14W LED) **MTG120** - (20W LED)	**Standard CRI 80+** **27KS** - 2700K-82 CRI **30KS** - 3020K-82 CRI **35KS** - 3450K-80 CRI **High CRI 90+** **27KH** - 2700K-90 CRI **30KH** - 3020K-90 CRI	**LRNT410** - 10° Distribution **LRNT425** - 25° Distribution	**10** - White **21** - Black **28** - Metalized Grey **RAL** - Special Color	**LNC61** **LNC63** **LNC65** **LIC1** **LIC3** **LIC5** **LCP1** **LCP3** **LCP5**	**120V** **277V** **HOUSING DETAILS next page**	**CB27** - 27" C-Channel **CB52** - 52" C-Channel **DIML2**- 0-10V Low Voltage 15% Dimming Driver **DIML3**- Lutron Hi-lume LED / A-Series 2-wire Foward Phase (with neutral) 1% Dimming Driver. **120V Only.** **DIML4** - Lutron Hi-lume LED / A-Series 3-wire Fluorescent or EcoSystem 1% Dimming Driver **EML** - Emergency lighting battery pack w/ remote test switch. **Above ceiling access required for service** **EML not for use with IC/Airtight Housing**

BOFD - Borocilate Frosted
LLFD - Linear Spread Frosted Low Iron
SOFD - Solite Frosted
PRFD- Prismatic Frosted
HEXD- 1/8" Hex Cell Louver

LENSES and Louver

USAI®
www.usailighting.com
info@usailighting.com
1126 River Road
New Windsor, NY 12553
T 845–565–8500
F 845–561–1130

©2012. USAI, LLC.
All rights reserved.
All designs protected by copyright.
Revised 07/31/2012

Project: IERBYS

Project #: 12141

Date: 27 March 2013
265000
Final Construction Documents

Type: F2d

LIGHTING CONTROL CUT SHEET Note: This document is for information only. Refer to specifications for all catalog numbers, etc.

NANOLED® NXT

Housings for use with
NanoLED Adjustable Trims - Round

LNC61, LNC63, LNC65
LIC1, LIC3, LIC5
LCP1, LCP3, LCP5

HOUSING FEATURES

- Easy adjustment aperture plate that allows ceiling thickness adjustment from 7/8" to 1 1/2". See housing matrix for details.
- Patent pending "Slide & Replace" easy driver replacement.
- Quick connectors on all wire connections.
- Universal housing style allows the ability to swap trim styles between Downlight, Adjustable and Wall Wash. See Plug-and-Play limitations on matrix below.
- Fabricated of 20 ga. black powder coated steel with thru wire J-box, 2 in 2 out at min. 90°C, #12 AGW thru branch circuit wiring.

DRIVER: (Field Replaceable)
Solid state electronic. Constant current. High power factor. Specify 120V or 277V.

DIMMING: (optional)
3 wire dimming driver available. See compatibility chart attached.

MOUNTING:
Butterfly brackets and adjustable nailer bars with integral nails provided. Nailer bars are extendible from 14" to 24" centers.

CEILING CUT OUT: 3 1/2" Ø

LISTINGS:
Dry/Damp
IBEW union made.

ENERGY STAR PARTNER

NOTES:
- Maximum ceiling thickness 1 1/2". See matrix for ceiling thickness options.
- Housing included with trim.
- Trimless for drywall installation only
- Trimless not available in acoustical ceilings.
- Fixture should be installed in applications where ambient temperatures do not exceed 40°C during normal operation.
- **5 year warranty**

HOUSING INFORMATION - See limitations below

New Construction

LNC61 - DL / ADJ / WW
(Max. Ceiling Thickness - 7/8")

LNC63 - DL / ADJ 30° / WW
(Max. Ceiling Thickness - 1 1/4")

LNC65 - DL / ADJ 20°
(Max. Ceiling Thickness - 1 1/2")

IC / Airtight

LIC1 - DL / ADJ / WW
(Max. Ceiling Thickness - 7/8")

LIC3 - DL / ADJ 30° / WW
(Max. Ceiling Thickness - 1 1/4")

LIC5 - DL / ADJ 20°
(Max. Ceiling Thickness - 1 1/2")

CP / Chicago Plenum - CCEA Approved

LCP1 - DL / ADJ / WW
(Max. Ceiling Thickness - 7/8")

LCP3 - DL / ADJ 30° / WW
(Max. Ceiling Thickness - 1 1/4")

LCP5 - DL / ADJ 20°
(Max. Ceiling Thickness - 1 1/2")

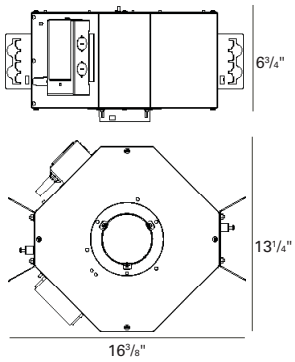

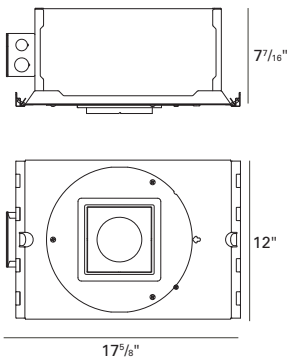

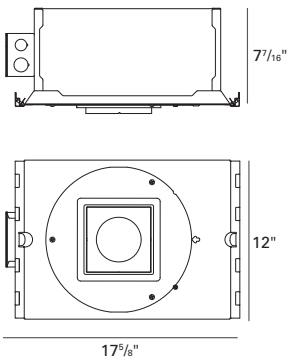

Order housings with trims on reverse side.

USAI®
www.usailighting.com
info@usailighting.com
1126 River Road
New Windsor, NY 12553
T 845–565–8500
F 845–561–1130

©2012. USAI, LLC.
All rights reserved.
All designs protected by copyright.
Revised 07/31/2012

Project: IERBYS
Project #: 12141

Date: 27 March 2013
265000
Final Construction Documents

Type: F2d

LIGHTING CONTROL CUT SHEET Note: This document is for information only. Refer to specifications for all catalog numbers, etc.

NANOLED NXT

DIMMING DRIVER COMPATIBILITY SELECTION GUIDE DIML2 & DIML3

DIMMING DRIVER WIRING SCHEMES:

DIML2 LED: 0-10V FL Dimming Driver Wiring (Dims down to 15%)

NOTE: Consult dimmer manufacturer for detailed installation information.

For use with 0-10V fluorescent type controls.
Use only with approved vendor models:
Lutron: DIVA DVTV-XX XX=Color
Leviton: IP710-DLX
Lightolier: V2000FAMU

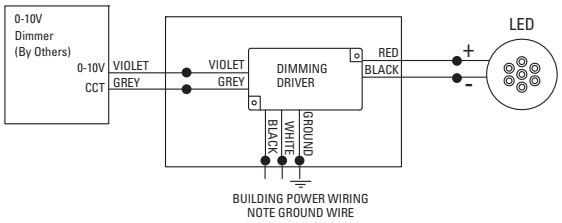

Compatible Crestron Dimming System

NOTE: Consult dimmer manufacturer for detailed installation information.

Creston Model	Compatible	Min # of Fixtures Required (1)	Creston Min-Max % Limits (2)	Measured Light Output (3)
CLS-EXP-DIMFLV	Y	1	0-100%	15-100%
DIN-4DIMFLV4	Y	1	0-100%	15-100%
DIN-A08	Y	1	0-100%	15-100%
GLX-DIMFLV8	Y	1	0-100%	15-100%
GLXP-DIMFLV8	Y	1	0-100%	15-100%

(1) Operating dimmers with less than minimum required fixtures may cause flicker.
The Max number of fixtures is limited by dimmer rating unless otherwise noted.
(2) % Level refers to the Crestron Control System Intensity.
Operating the dimmer below the Min % level may cause flicker.
Operating the dimmer above the Max % may show no additional brightness.
(3) % Level of light output from fixture when connected directly to power source
(4) Dimmer requires a direct connection to neutral unless otherwise noted.

DIML3 LED: Lutron Hi-lume LED A-Series 2-Wire Foward Phase (with neutral) 1% Dimming Driver. 120V Only.

Compatible Lutron Dimmers / Test Results

NOTE: Consult dimmer manufacturer for detailed installation information.

Product	Part Number	Fixtures Per Dimmer 120V Only*	Measured Light Output Range
NovaT	NTLV-600-CPN0199	1 – 8	100% - 1%
Maestro Wireless	MRF2-6ND-120	1 – 8	100% - 1%
RadioRA 2 1000W	RRD-10ND	1 – 13	100% - 1%
RadioRA 2 Adaptive dimmer	RRD-6NA	1 – 8	100% - 1%
RadioRA 600W	RA-6ND	1 – 8	100% - 1%
RadioRA 1000W	RA-10ND	1 – 13	100% - 1%
HomeWorks QS 600W	HQRD-6ND	1 – 8	100% - 1%
HomeWorks QS 1000W	HQRD-10ND	1 – 13	100% - 1%
HomeWorks QS Adaptive dimmer	HQRD-6NA	1 – 8	100% - 1%
HomeWorks QS WPM	HQRJ-WPM-6D-120	1 – 11 (per output)	100% - 1%
HomeWorks 600W dimmer	HRD-6ND	1 – 8	100% - 1%
HomeWorks 1000W dimmer	HWD-10ND, HRD-10ND	1 – 8	100% - 1%
HomeWorks WPM	HWI-WPM-6D-120	1 – 10 (per output)	100% - 1%
GRAFIK Eye QS	QSGR-, QSGRJ-	1 – 10 (per output)	100% - 1%
GRAFIK Eye 3000	GRX-3100, GRX-3500	1 – 10 (per output)	100% - 1%
RPM-4U Module (LCP, HomeWorks, GRAFIK Systems, Quantum)	HW-RPM-4U-120, LP-RPM-4U-120	1 – 26 (per output)	100% - 1%
RPM-4A Module (LCP, HomeWorks, GRAFIK Systems, Quantum)	HW-RPM-4A-120, LP-RPM-4A-120	1 – 8 (per output)	100% - 1%
GP Panels (LCP, HomeWorks, GRAFIK Systems, Quantum)	Various	1 – 27	100% - 1%
Stanza	SZ-6ND	1 – 8	100% - 1%

* Fixtures per Dimmer value assumes a 40W fixture. Number of fixtures may be higher if wattage is less than 40W.
NOTE: Contact Lutron tech support for deganging rules when using wallbox controls on the Hi-lume A-Series LED Driver.

Compatible ETC Dimming Cabinets / Test Results

Approved for use with:
ETC Sensor + Cabinet with D20 dimming module
Measured light output 100% - 1%

ETC Unison DRd Cabinet with D20F dimming module
NOTE: Additional dim configuration required for optimum performance.
Measured light output 100% - 1%

Wire Diagram for 2-Wire Control

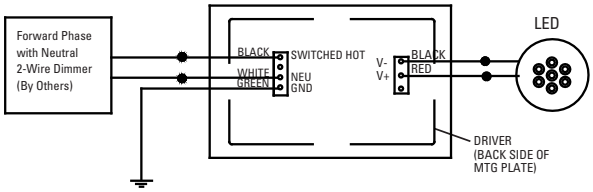

USAI®
www.usailighting.com
info@usailighting.com
1126 River Road
New Windsor, NY 12553
T 845–565–8500
F 845–561–1130

©2012. USAI, LLC.
All rights reserved.
All designs protected by copyright.
Revised 07/31/2012

Project: IERBYS
Project #: 12141

Date: 27 March 2013
265000
Final Construction Documents

Type: F2d

LIGHTING CONTROL CUT SHEET Note: This document is for information only. Refer to specifications for all catalog numbers, etc.

NANOLED® NXT

DIMMING DRIVER COMPATIBILITY SELECTION GUIDE
DIML4

DIMMING DRIVER WIRING SCHEMES:

DIML4 LED: Lutron Hi-lume LED A-Series 3-Wire Fluorescent or EcoSystem 1% Dimming Driver.

Compatible Lutron Dimmers / Test Results

NOTE: Consult dimmer manufacturer for detailed installation information.

Product	Part Number	Fixtures Per Dimmer 120V	Fixtures Per Dimmer 277V	Measured Light Output Range
NovaT	NTF-10,	1-59	-	100% - 1%
NovaT	NTF-103P, NTF-10-277	1-29	1-61	100% - 1%
NovaT	NTF-103P-277	-	1-46	100% - 1%
Nova	NF-10	1-59	-	100% - 1%
Nova	NF-103P, NF-10-277	1-29	1-61	100% - 1%
Nova	NF-103P-277	-	1-46	100% - 1%
Vareo	VF-10	1-29	-	100% - 1%
Skylark	SF-10P, SF-103P	1-29	-	100% - 1%
Skylark	SF-12P-277,SF-12P-277-3	-	1-46	100% - 1%
Diva	DVF-103, DVSCF-103P	1-29	-	100% - 1%
Diva	DVF-103P-277,DVSCF-103P-277	-	1-46	100% - 1%
Ariadni	AYF-103P	1-29	-	100% - 1%
Ariadni	AYF-103P-277	-	1-46	100% - 1%
Vierti	VTF-6AM	1-22	-	100% - 1%
Maestro	MAF-6AM, MAF-6AM-277, MSCF-6AM, MCSF-6AM-277	1-22	1-46	100% - 1%
Maestro Wireless	MRF2-F6AN-DV	1-22	1-46	100% - 1%
Spacer System	SPSF-6A,SPSF-6A-277, SPSF-6AM, SPSF-6AM-277	1-22	1-46	100% - 1%
Lyneo LX	LXF-103PL	1-29	-	100% - 1%
Lyneo LX	LXF-103PL-277	-	1-46	100% - 1%
Radio RA 2	RRD-F6AN-DV	1-22	1-46	100% - 1%
HomeWorks QS	HQRD-F6AN-DV	1-22	1-46	100% – 1%
Interfaces (1)	PHPM-3F -120, PHPM-3F-DV	1-59	1-123	100% - 1%
	NGRX-FDBI-16A	1-59	-	100% - 1%
Energi Savr Node with EcoSystem	CS-1L-WM, CS-2L-WM, CS-1LCM, CS-2L-CM	64 per EcoSystem		100% - 1%
Grafik Eye QS with ECO System	QS with EcoSystem			100% - 1%
				100% - 1%
Quantum	Quantum			100% - 1%
PowerPak dim module ECOSystem	RMJ-ECO32-DV-B	32 per module		100% - 1%
				100% - 1%

(1) For use with 3 Wire controls or Commercial Systems, RA Systems or Home Systems applications.
*Contact Lutron tech support for deganging rules when using wallbox controls on the Hi-lume A-Series LED Driver.
**Fixtures per Dimmer value assumes a 40W fixture. Number of fixtures may be higher if wattage is less than 40W.

Wire Diagram for 3-Wire FL Control (no Eco System Control)

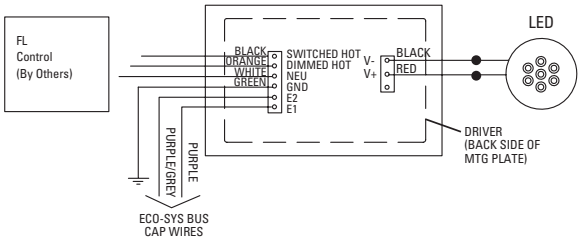

Wire Diagram for ECO System Digital Control

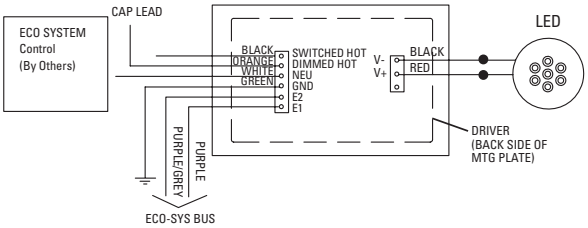

Compatible ETC Dimming Cabinets / Test Results

Approved for use with:
ETC Sensor+ Cabinet with D20 dimming module
Measured light output 100% - 1%

ETC Unison DRd Cabinet with D20F dimming module
NOTE: Additional dim configuration required for optimum performance.
Measured light output 100% - 1%

USAI®
www.usailighting.com
info@usailighting.com
1126 River Road
New Windsor, NY 12553
T 845–565–8500
F 845–561–1130

©2012. USAI, LLC.
All rights reserved.
All designs protected by copyright.
Revised 07/31/2012

Project: IERBYS
Project #: 12141

Date: 27 March 2013
265000
Final Construction Documents

Type: F2d

LIGHTING CONTROL CUT SHEET Note: This document is for information only. Refer to specifications for all catalog numbers, etc.

BIRCHWOOD lighting

www.birchwoodlighting.com

WP SYSTEM

Sliding Adjustable Staggered

Single or Double T5/T5HO or T8

Multi-Application Sliding Strip

With a vast assortment of ultra-minimal housing profiles that can accommodate T5/T5HO or T8 linear lamps, WP SYSTEM Specification Grade Strip fixtures are the perfect choice when less is best.

Choose from many styles, including: side mount, diagonal, adjustable staggered or individual modules in shorter lengths. Whatever your specification requires, WP SYSTEM fixtures can deliver strong light while providing durability and value to any interior project: commercial, architectural, residential or retail.

Reflectors and various accessories (on some models) combined with dimming capabilities, or emergency battery options complete the make-up for one of our most popular and enduring product lines.

UL and c-UL listed for dry and damp locations.

Made in the USA

FIXTURE SPECIFICATIONS

Construction
Die-formed heavy duty 20 gauge steel construction. Post-formed high reflectivity white powder coat finish provides smooth edges, rust-resistance and even coverage on entire fixture.

Lamping and Ballast
Single or double T5, T5HO or T8 linear fluorescent lamps in cross section. Integral electronic ballast standard. Dimming and (EM) Emergency battery pack options available. Consult factory for availability and specifications.

Finishes
Post-formed high-reflectivity white powder coat finish. Custom colors available - consult factory.

Mounting
Suitable for surface mounting in multiple applications. Ideal for cove or soffit. Compatible for field thru-wiring.

Fixture Length
Fixtures are available in nominal lengths of 2, 3, and 4 feet. Continuous run mounting and thru-wire compatibility.

Custom and Mods
We proudly specialize in manufacturing custom and modified luminaires and have the ability to modify most of our standard fixtures. Please contact factory with any inquiries.

V-1012B

Birchwood Lighting • 1302 East Hunter Avenue • Santa Ana, CA 92705 • 714.550.7118 fax 714.550.7151

Project: IERBYS

Project #: 12141

Date: 27 March 2013
265000
Final Construction Documents

Type: F3

LIGHTING CONTROL CUT SHEET Note: This document is for information only. Refer to specifications for all catalog numbers, etc.

BIRCHWOOD lighting

www.birchwoodlighting.com

WP SYSTEM

Sliding Adjustable Staggered

Single or Double T5/T5HO or T8

Type: Job Name:

Multi-Application Sliding Strip

SPECIFICATION CODE

WP- _____ _____ _____ _____ _____ _____ _____

lamps model length finish voltage ballast options

Lamps	Model	Nominal Length	Finish	Voltage[1]	Ballast	Options
T5 **T5HO** **T8**	**1STSAS -** 1 Lamp Sliding Adjustable Stagger **2STSAS -** 2 Lamp Sliding Adjustable Stagger	**2** - 2' **3** - 3' **4** - 4' **CR_** Continuous Run[2]	**HRW** - High Reflectivity White (standard) **CUP** - Custom Paint	**120** **277**	**EB** - Electronic (standard) **Dimming** **HL3** - Hi-Lume **ES** - EcoSystem **ESH** - EcoSystem H-Series **0-10V** - 0-10V	**EM**[3] - Emergency Battery Pack

NOTES
1 other voltages available, consult factory
2 CR fixtures are field thru-wire compatible
3 not available in all lengths, consult factory

Dimensions

1STSAS or 2STSAS T5/T5HO

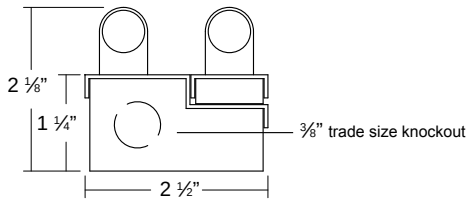

1STSAS or 2STSAS T8

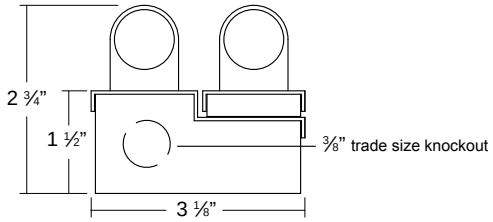

1STSAS T5/T5HO/T8

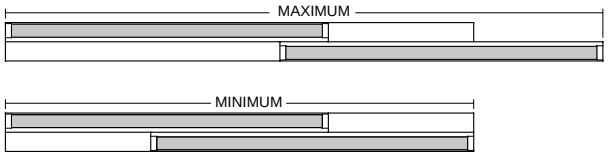

2STSAS T5/T5HO/T8

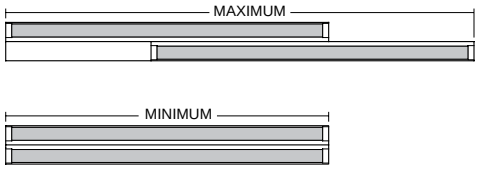

1STSAS T5/T5HO extension table

Nominal	Min/Max Lengths	
T5 or T5HO	Min	Max
2'	31 ½"	41"
3'	49 ¼"	64 ½"
4'	67"	88 ¼"

1STSAS T8 extension table

Nominal	Min/Max Lengths	
T8	Min	Max
2'	34 ½"	44 ½"
3'	52 ½"	68 ½"
4'	70 ½"	92 ½"

2STSAS T5/T5HO extension table

Nominal	Min/Max Lengths	
T5 or T5HO	Min	Max
2'	22 7/16"	32 ⅛"
3'	34 ¼"	49 ⅞"
4'	46 1/16"	67 5/16"

2STSAS T8 extension table

Nominal	Min/Max Lengths	
T8	Min	Max
2'	24"	34 ¾"
3'	36"	52 ¾"
4'	48"	70 ¾"

V-1012B

Birchwood Lighting • 1302 East Hunter Avenue • Santa Ana, CA 92705
714.550.7118 fax 714.550.7151

Due to a program of continuous improvement specifications are subject to change without notice.
© 2012 Birchwood Lighting, Inc. All rights reserved.

Project: IERBYS

Project #: 12141

Date: 27 March 2013
265000
Final Construction Documents

Type: F3

LIGHTING CONTROL CUT SHEET Note: This document is for information only. Refer to specifications for all catalog numbers, etc.

Horton Lees Brogden Lighting Design 8580 Washington Blvd Culver City CA 90232 310 837 0929 voice | 310 837 0902 fax www.HLBlighting.com

BeveLED® LED

Downlight

*

PROGRESS Report 2010 SELECTION

PRODUCT INNOVATION AWARDS • 2011
PLATINUM WINNER
MOST UNIQUE PRODUCT WINNER

3020

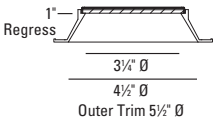

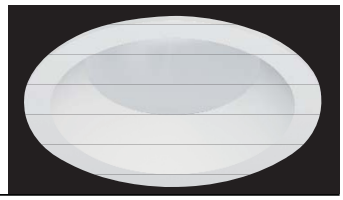

LUMINAIRE INFORMATION

APPLICATION:
Accent luminaire for Residential, Commercial, Retail or Hospitality environments.

MATERIALS:
Trim: Die cast aluminum retained by two mounting clips.
Housing: Fabricated of 20 ga. galvanized steel with thru wire J-box, 4 in 4 out (for NC, NCAH and IC) 2 in 2 out (for NCSL and RT) at min. 90°C, #12 AGW thru branch circuit wiring. Housing and trim supplied as one complete unit.
Trim Lens: Proprietary low glare blended optical lens system.
Reflector: Precision injection molded specular polycarbonate reflector maximized for 30º, 50° or 80° beam distribution. 30º and 50º reflectors are field interchangeable in NC, IC, CP and NCAH.

LIGHT ENGINE: Field Replaceable
Available in 10W or 20W ±100K. High power white LED's tightly binned for fixture to fixture color consistency.

CRI OPTIONS: Standard: 80+ CRI. **High:** 90+ CRI.

RATED LIFE: Based on IESNA LM80-2008
20W - 50,000 hours at 70% lumen maintenance (L70).
10W - 50,000 hours at 70% lumen maintenance (L70).

HEATSINK:
Proprietary high performance aluminum die cast heatsink for maximum LED life.

DRIVER: Field Replaceable
Solid state electronic. Constant current. High power factor. Specify 120V or 277V.

DIMMING: (optional)
Multiple 3 wire dimming drivers available. See compatibility chart attached.

MOUNTING:
NC / NCAH / IC / NCSL : Butterfly brackets and adjustable nailer bars with integral nails provided. Nailer bars are extendible from 14" to 24" centers.
RT: Screw driver activated swing and compress mounting system.

CEILING CUT OUT: 5¹/₁₆" Ø

LISTINGS:
Dry/Damp.
*Wet under covered ceiling is optionally available (not standard). IBEW union made. Chicago Plenum housing is CCEA Approved.

ENERGY STAR
lighting facts LED Product Partner

NOTES:
- Housing included with trim.
- Maximum ceiling thickness
  NC / NCAH / IC / CP: 1 inch. **NCSL / RT:** 1-1/4"
  Consult factory for other ceiling conditions.
- Fixture should be installed in applications where ambient temperatures do not exceed 40°C during normal operation.
- **5 year warranty**
- IC not currently Energy Star rated.
- NCSL / RT: Min. 1/2" clearance above fixture for servicing.

PHOTOMETRICS:
Consult factory.
Tested in accordance with IESNA LM79-2008.

HOUSING INFORMATION

New Construction - NC
Non-Air Handling Plenum
50° Beam Shown

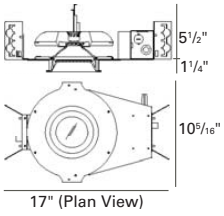

New Construction - NCAH
Air Handling Plenum
50° Beam Shown

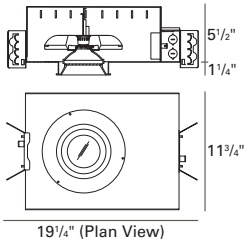

Insulated / Airtight - IC
Chicago Plenum - CP
50° Beam Shown

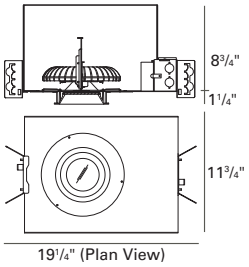

New Construction - NCSL
Air Handling Plenum

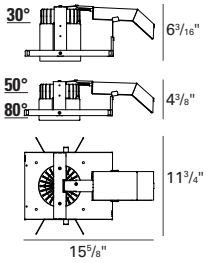

Retrofit - RT
Air Handling Plenum

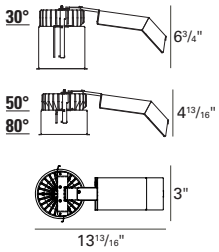

HOW TO SPECIFY

Trim	Trim Suffix for 80°	Finish	Housing	Color Temperature	Reflector	Housing Type	Voltage	Accessories
3020								
3020 BeveLED Trim Downlight	**8** Use 8 suffix to order trim that uses 80° reflector **Do not include 8 when ordering 30° or 50° reflector**	**10** - White **21** - Black **28** - Metalized Grey **RAL** - Special Color	**LRTD4-9010-C1** (10W LED) **LRTD4-9020-C1** (20W LED)	**Standard CRI 80+** **27** - 2700K **30** - 3000K **35** - 3500K **40** - 4000K **High CRI 90+** **27H** - 2700K **30H** - 3000K	**30** - 30° **50** - 50° **80** - 80°	**NC** - New Construction **CP** - Chicago Plenum **IC** - Insulated / Airtight **NCAH** - New Construction Air Handling **NCSL** - New Construction Air Handling **RT** - Retrofit Air Handling	**120V** **277V**	**CB27** - 27" C-Channel Bars **CB52** - 52" C-Channel Bars **DIML2** - 0-10V Low Voltage 15% Dimming Driver **DIML4** - Lutron Hi-Lume LED / ECO System Series A 3 Wire Control 1% Dimming Driver **Below Options ONLY available for NC / NCAH / IC*** **W** - Wet Listed (under covered ceiling) **EML** - Emergency lighting battery pack w/ remote test switch. Not available in IC* Note: Housing size may differ. **Above ceiling access required for service Not for use with WET LISTED (W) option** **RLD30** - 30º Reflector **RLD50** - 50º Reflector

8 ← Use **8** suffix to order trim that uses 80° reflector only
Do **not** include **8** suffix when ordering 30°or 50°reflector → 80

USAI®
www.usailighting.com
info@usailighting.com
1126 River Road
New Windsor, NY 12553
T 845–565–8500
F 845–561–1130

©2011. USAI, LLC.
All rights reserved.
All designs protected by copyright.
Revised 04/11/12

Project: IERBYS
Project #: 12141

Date: 27 March 2013
265000
Final Construction Documents

Type: F4

LIGHTING CONTROL CUT SHEET Note: This document is for information only. Refer to specifications for all catalog numbers, etc.

BeveLED® LED Downlight

PERFORMANCE SUMMARY

BeveLED Downlight, 50° Beam, 20W
3020-10-LRTD4-9020-C1-30-50-NC-120V
LTL Report No. : 20486
Spacing Criteria: .75 **CBCP: 1259**

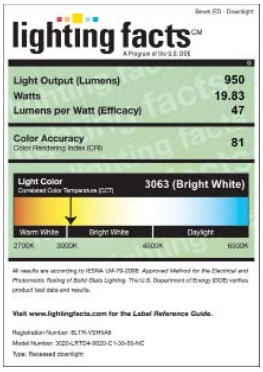

LIGHTING PERFORMANCE DATA

Ceiling Height (FT)	Initial Footcandles	Beam Diameter @ 50°
6.0	35.0	4.5
8.0	19.7	6.1
10.0	12.6	7.5
12.0	8.7	9.0
14.0	6.9	10.5

DISTRIBUTION CURVE

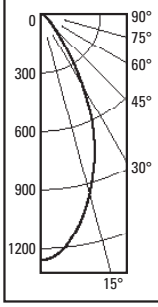

CANDELA

Degrees	At 0°	At 90°
90	0	0
85	1	1
75	5	5
65	17	17
55	33	33
45	81	81
35	247	247
25	611	611
15	949	949
5	1214	1214
0	1259	1259

ZONAL LUMEN SUMMARY

Zone	Lumens	% of Lamp	% of Luminaire
0-30	651.1	N/A	70.0%
0-40	809.5	N/A	87.0%
0-60	905.7	N/A	97.4%
0-90	930.1	N/A	100.0%
90-180	0.0	N/A	0.0%
0-180	930.1	N/A	100.0%

Total lumen Output: 930.1 Lumens
Luminaire Efficacy: 46.8 Lumens per Watt
CIE Type: Direct
Spacing Criterion: 0.75

BeveLED Downlight, 30° Beam, 20W
3020-10-LRTD4-9020-C1-30-30-NC-120V
LTL Report No. : 20484
Spacing Criteria: .47 **CBCP: 2777**

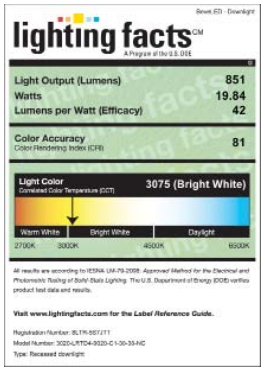

LIGHTING PERFORMANCE DATA

Ceiling Height (FT)	Initial Footcandles	Beam Diameter @ 50°
6.0	77.1	2.8
8.0	43.4	3.7
10.0	27.8	4.7
12.0	19.3	5.6
14.0	14.2	6.5

DISTRIBUTION CURVE

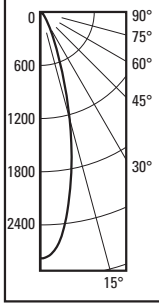

CANDELA

Degrees	At 0°	At 90°
90	0	0
85	1	1
75	3	3
65	10	10
55	18	18
45	37	37
35	99	99
25	340	340
15	1243	1243
5	2561	2561
0	2777	2777

ZONAL LUMEN SUMMARY

Zone	Lumens	% of Lamp	% of Luminaire
0-30	723.2	N/A	85.4%
0-40	787.7	N/A	93.0%
0-60	833.2	N/A	98.4%
0-90	846.7	N/A	100.0%
90-180	0.0	N/A	0.0%
0-180	846.7	N/A	100.0%

Total lumen Output: 846.7 Lumens
Luminaire Efficacy: 42.6 Lumens per Watt
CIE Type: Direct
Spacing Criterion: 0.47

BeveLED Downlight, 50° Beam, 10W
3020-10-LRTD4-9010-C1-30-50-NC-120V
LTL Report No. : 20710
Spacing Criteria: .71 **CBCP: 766**

LIGHTING PERFORMANCE DATA

Ceiling Height (FT)	Initial Footcandles	Beam Diameter @ 50°
6.0	21.3	4.3
8.0	12.0	5.7
10.0	7.7	7.1
12.0	5.3	8.5
14.0	3.9	9.9

DISTRIBUTION CURVE

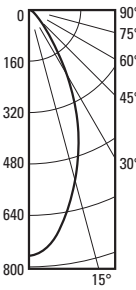

CANDELA

Degrees	At 0°	At 90°
90	0	0
85	1	1
75	3	3
65	9	9
55	18	18
45	46	46
35	138	138
25	341	341
15	549	549
5	734	734
0	766	766

ZONAL LUMEN SUMMARY

Zone	Lumens	% of Lamp	% of Luminaire
0-30	374.2	N/A	70.6%
0-40	463.0	N/A	87.5%
0-60	517.3	N/A	97.5%
0-90	530.4	N/A	100.0%
90-180	0.0	N/A	0.0%
0-180	530.4	N/A	100.0%

Total lumen Output: 530.4 Lumens
Luminaire Efficacy: 52.9 Lumens per Watt
CIE Type: Direct
Spacing Criterion: 0.71

BeveLED Downlight, 30° Beam, 10W
3020-10-LRTD4-9010-C1-30-30-NC-120V
LTL Report No. : 20708
Spacing Criteria: .47 **CBCP: 1639**

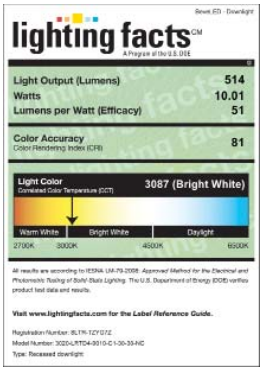

LIGHTING PERFORMANCE DATA

Ceiling Height (FT)	Initial Footcandles	Beam Diameter @ 50°
6.0	45.5	2.8
8.0	25.6	3.7
10.0	16.4	4.7
12.0	11.4	5.6
14.0	8.4	6.5

DISTRIBUTION CURVE

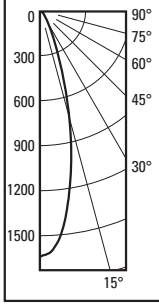

CANDELA

Degrees	At 0°	At 90°
90	0	0
85	0	0
75	1	1
65	6	6
55	10	10
45	21	21
35	58	58
25	202	202
15	738	738
5	1510	1510
0	1639	1639

ZONAL LUMEN SUMMARY

Zone	Lumens	% of Lamp	% of Luminaire
0-30	428.5	N/A	85.5%
0-40	466.6	N/A	93.2%
0-60	493.3	N/A	98.5%
0-90	500.9	N/A	100.0%
90-180	0.0	N/A	0.0%
0-180	500.9	N/A	100.0%

Total lumen Output: 500.9 Lumens
Luminaire Efficacy: 50.0 Lumens per Watt
CIE Type: Direct
Spacing Criterion: 0.47

Note: Above data shown using 80+ CRI. 90+ CRI, de-rate data by approximately 20%.

USAI®
www.usailighting.com
info@usailighting.com
1126 River Road
New Windsor, NY 12553
T 845–565–8500
F 845–561–1130

©2011. USAI, LLC.
All rights reserved.
All designs protected by copyright.
Revised 04/11/12

Project: IERBYS

Project #: 12141

Date: 27 March 2013
265000
Final Construction Documents

Type: F4

LIGHTING CONTROL CUT SHEET Note: This document is for information only. Refer to specifications for all catalog numbers, etc.

BIRCHWOOD lighting

www.birchwoodlighting.com

WP SYSTEM

Sliding Adjustable Staggered

Single or Double T5/T5HO or T8

Multi-Application Sliding Strip

With a vast assortment of ultra-minimal housing profiles that can accommodate T5/T5HO or T8 linear lamps, WP SYSTEM Specification Grade Strip fixtures are the perfect choice when less is best.

Choose from many styles, including: side mount, diagonal, adjustable staggered or individual modules in shorter lengths. Whatever your specification requires, WP SYSTEM fixtures can deliver strong light while providing durability and value to any interior project: commercial, architectural, residential or retail.

Reflectors and various accessories (on some models) combined with dimming capabilities, or emergency battery options complete the make-up for one of our most popular and enduring product lines.

UL and c-UL listed for dry and damp locations.

Made in the USA

FIXTURE SPECIFICATIONS

Construction
Die-formed heavy duty 20 gauge steel construction. Post-formed high reflectivity white powder coat finish provides smooth edges, rust-resistance and even coverage on entire fixture.

Lamping and Ballast
Single or double T5, T5HO or T8 linear fluorescent lamps in cross section. Integral electronic ballast standard. Dimming and (EM) Emergency battery pack options available. Consult factory for availability and specifications.

Finishes
Post-formed high-reflectivity white powder coat finish. Custom colors available - consult factory.

Mounting
Suitable for surface mounting in multiple applications. Ideal for cove or soffit. Compatible for field thru-wiring.

Fixture Length
Fixtures are available in nominal lengths of 2, 3, and 4 feet. Continuous run mounting and thru-wire compatibility.

Custom and Mods
We proudly specialize in manufacturing custom and modified luminaires and have the ability to modify most of our standard fixtures. Please contact factory with any inquiries.

V-1012B

Birchwood Lighting • 1302 East Hunter Avenue • Santa Ana, CA 92705 • 714.550.7118 fax 714.550.7151

Project: IERBYS

Project #: 12141

Date: 27 March 2013
265000
Final Construction Documents

Type: F5

LIGHTING CONTROL CUT SHEET Note: This document is for information only. Refer to specifications for all catalog numbers, etc.

BIRCHWOOD lighting

www.birchwoodlighting.com

WP SYSTEM

Sliding Adjustable Staggered

Single or Double T5/T5HO or T8

Type: Job Name:

Multi-Application Sliding Strip

SPECIFICATION CODE

WP- _____ _____ _____ _____ _____ _____ _____
lamps model length finish voltage ballast options

Lamps	Model	Nominal Length	Finish	Voltage[1]	Ballast	Options
T5 **T5HO** **T8**	**1STSAS -** 1 Lamp Sliding Adjustable Stagger **2STSAS -** 2 Lamp Sliding Adjustable Stagger	**2** - 2' **3** - 3' **4** - 4' **CR_** Continuous Run[2]	**HRW** - High Reflectivity White (standard) **CUP** - Custom Paint	**120** **277**	**EB** - Electronic (standard) **Dimming** **HL3** - Hi-Lume **ES** - EcoSystem **ESH** - EcoSystem H-Series **0-10V** - 0-10V	**EM**[3] - Emergency Battery Pack

NOTES
1 other voltages available, consult factory
2 CR fixtures are field thru-wire compatible
3 not available in all lengths, consult factory

Dimensions

1STSAS or 2STSAS T5/T5HO

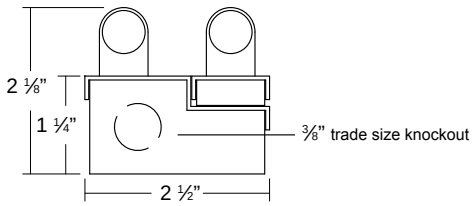

1STSAS or 2STSAS T8

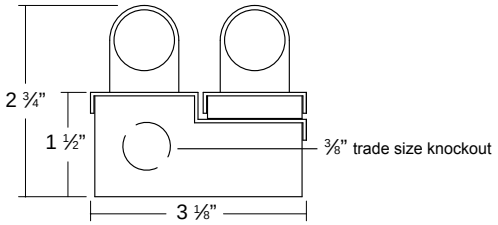

1STSAS T5/T5HO/T8

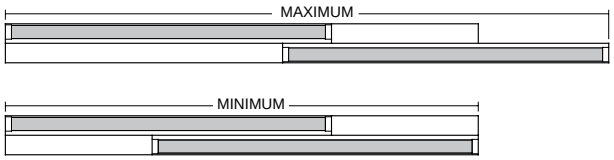

2STSAS T5/T5HO/T8

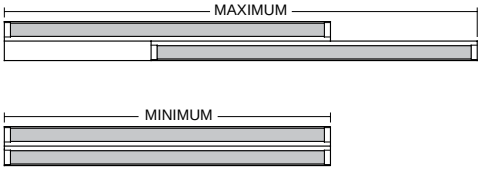

1STSAS T5/T5HO extension table

Nominal	Min/Max Lengths	
T5 or T5HO	Min	Max
2'	31 ½"	41"
3'	49 ¼"	64 ½"
4'	67"	88 ¼"

1STSAS T8 extension table

Nominal	Min/Max Lengths	
T8	Min	Max
2'	34 ½"	44 ½"
3'	52 ½"	68 ½"
4'	70 ½"	92 ½"

2STSAS T5/T5HO extension table

Nominal	Min/Max Lengths	
T5 or T5HO	Min	Max
2'	22 7/16"	32 ⅛"
3'	34 ¼"	49 ⅞"
4'	46 1/16"	67 3/16"

2STSAS T8 extension table

Nominal	Min/Max Lengths	
T8	Min	Max
2'	24"	34 ¾"
3'	36"	52 ¾"
4'	48"	70 ¾"

V-1012B

Birchwood Lighting • 1302 East Hunter Avenue • Santa Ana, CA 92705
714.550.7118 fax 714.550.7151

Due to a program of continuous improvement specifications are subject to change without notice.
© 2012 Birchwood Lighting, Inc. All rights reserved.

Project: IERBYS
Project #: 12141

Date: 27 March 2013
265000
Final Construction Documents

Type: F5

LIGHTING CONTROL CUT SHEET Note: This document is for information only. Refer to specifications for all catalog numbers, etc.

Job Name Here	Fixture Type Here
Designer/Firm Name Here	Ordering Information Here

LUMELEX® 2026 SERIES 120/277V • LED

Remote phosphor technology produces high quality, high output light with a consistent, even field for the most demanding applications of museum and retail accent lighting.

- Designed for the Xicato™ LED module up to 40 Watts
- Energy Star qualified with system efficiency up to 57 lumens/watt
- Exceeds ANSI specifications by maintaining extremely tight color consistency over the life of the module (within 2 MacAdam Ellipses)
- Tested to LM79 and LM80 Protocols
- 50,000 hour life to 70% lumen output, L_{70} at 95° ambient
- Integral electronic driver
- Field changeable reflectors (10°, 20°, 40° and 60°) modify the beam spread distribution
- Tool-mounted reflector (12°)
- Choice of lumen outputs (delivered lumens)
- Choice of color temperature
- Color Rendering Index (CRI) of either 97+/-2 (high) or 80+ (standard)
- Accessory holder accepts up to two size-AA LSI filters and accessories
- No UV or IR emissions; no mercury or lead
- On/off safety switch (on most mounting types)
- Available with LSI standard mounting options
- Dimmable with trailing edge electronic low voltage dimmers
- Integral dimmer available on 25 watt models or less (track or canopy mount only)
- Sturdy aluminum housing
- Vertical and horizontal allen key wrench locking
- Finishes: LSI Black, White, Silver and Graphite
- Fixture weight: 3.25 lbs

MOUNTING OPTIONS

Please review the **ORDERING INFORMATION** section on the next page on how to specify the following:

- Lumens/CRI/Wattage
- Color Temperature
- Reflector - mm/beam spread

LX2026-XXXX-00
Lexan fitting for 1 and 2 circuit LSI track. With On/Off switch.

LX2026-XXXX-BUS
Lexan fitting for 1 and 2 circut LSI Busway. With On/Off switch.

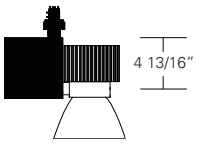

LX2026-XXXX-2G
Universal fitting for Unistrut Systems and any screw or bolt-up applications. With switch, 6-foot 3-wire grounding cord and NEMA 5-15P plug.

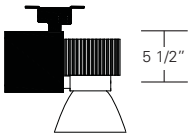

LX2026-XXXX-3G
C-clamp for pipes from 5/8" to 2" O.D. With switch, 6-foot 3-wiregrounding cord and NEMA 5-15P plug.

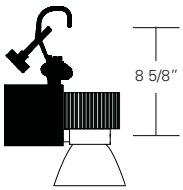

LX2026-XXXX-5A
Canopy for permanent mounting on standard 4" octagonal outlet boxes.

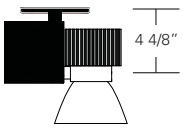

Other Options (Consult Factory):

- Stems, specify length
- Custom color, RAL palette
- Security/Worklite Fixture, add suffix **—EF00** (track) and **—EFBUS** (Busway) mounting option only.

10/12 www.LightingServicesInc.com

Project: IERBYS

Project #: 12141

Date: 27 March 2013
265000
Final Construction Documents

Type: F6

LIGHTING CONTROL CUT SHEET Note: This document is for information only. Refer to specifications for all catalog numbers, etc.

Job Name Here	Fixture Type Here
Designer/Firm Name Here	Ordering Information Here

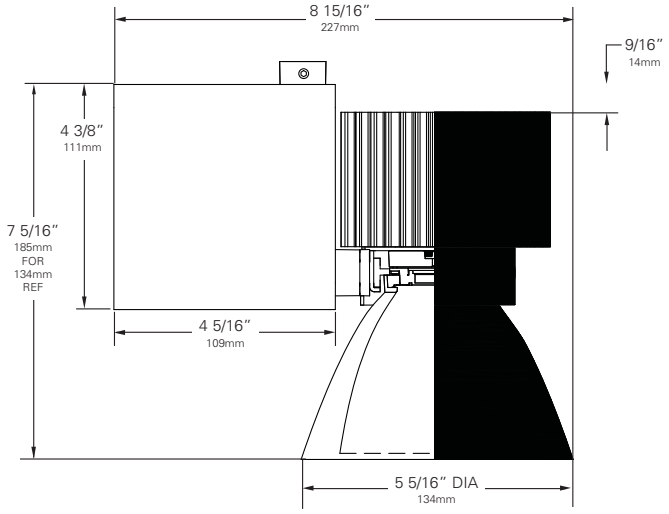

ORDERING INFORMATION

1. If a 277V unit is required, add **V** before the unit number.
2. Choose the letter code to designate the desired **LED Rating/CRI/Wattage**
   (E) for 860/97/25 **(F)** for 1120/80/25
   (G) for 1120/97/34 **(H)** for 1800/80/40
3. Choose the numeric code to designate the desired **Color Temperature** (+/- 50K)
   (2) for 2700K **(3)** for 3000K **(4)** for 4000K **(5)** for 3500K
4. Choose the alpha-numeric code to designate the desired **Reflector** - mm/beam spread
   (M1) for 70mm/10° **(M2)** for 70mm/20°
   (M4) for 70mm/40° **(M6)** for 70mm/60°
   (L2) for 94mm/20° **(H1)** for 134mm/12°
5. Select your **Mounting Option**
6. Choose other fixture Options (add suffix):
   - For Coiled Cord, add **CC**. Coiled Cord is 18/3 105°C, 18" retracted, 6 foot extended. White fixtures are supplied with white cord, all other finishes are supplied with black cord. Available only with **2G** and **3G** mounting options. (When a coiled cord is not specified, a straight cord is provided.)
   - For Integral Dimmer, add **D**. Available on models 25 watts or less. (Note: track fitting changes from – 00 to – 00E to house dimmer)
7. Choose a **Finish** for your fixture:
   Black **(B)** White **(W)** Silver **(S)** Graphite **(G)**
   Example: **V** (277Volt) **LX2026** (Fixture) - **H** (Rating) **3** (CAT) **H1** (Reflector) - **00** (Fitting) **CC** (Coiled Cord) **B** (Finish)
   Blue fields are optional. Leave blank if not required.
8. Don't forget your Accessories!

ENERGY STAR

F, G, H models only

DRIVER TYPE (Electronic)

700 mA Dimmable Driver — Compatible with Low Voltage Electronic Dimmers. See Dimming application sheet.

LED letter code:	E	F	G	H
Input Power (A) - 120V	0.5	0.5	0.8	0.8
Input Power (A) - 277V	0.13	0.13	0.4	0.4
Wattage	25	25	34	40
Power Factor - 115V	0.92	0.92	0.92	0.92

Click for detailed photometrics

ACCESSORIES

Note: suffix "M" = 70mm diameter reflector; suffix "L" = 94mm diameter reflector; suffix "H"=134mm diameter reflector

- **LX2024-Holder**
- **Hood 2IN AA***
- **Hood 2IN LXH**
- **Hood 4IN LXH**
- **ANG Hood 2IN AA***
- **Backer Ring AAB***
- **LX2024 Barndoor**
- **Louver Hex AA***
- **Glass Color Filters AA***
- **Spread Lens AA990, AA992, AA995, AA996***
- **Beam Softener AA998***
- **Light Blocking Screens AA801S, AA802S, AA803S***
- **Gel Holder LXM, LXL, or LXH**
- **Louver Hex LXM, LXL, or LXH****
- **Light Blocking Screens LXM, LXL, or LXH: 801S, 802S, 803S****
- **Color and Spread Gels LXM, LXL, or LXH****
- **LX-M10-REF (70mm/10°)**
- **LX-M20-REF (70mm/20°)**
- **LX-M40-REF (70mm/40°)**
- **LX-M60-REF (70mm/60°)**
- **LX-L20-REF (94mm/20°)**
- **LX-H12-REF (134mm/12°)**

* LX2024-Holder or Barndoor required for use with size AA accessories.

** Gel Holder required for use with LXM, LXL, or LXH accessories.

Click to view LumeLEX Accessories

Project: IERBYS
Project #: 12141

Date: 27 March 2013
265000
Final Construction Documents

Type: F6

LIGHTING CONTROL CUT SHEET Note: This document is for information only. Refer to specifications for all catalog numbers, etc.

SURFACE TRACK (120/250V) • SPECIFICATIONS

GENERAL Lighting Track shall allow fixtures to be located anywhere along the track length. Fixtures shall be easily focused, switched, dimmed, accessorized and removed as desired. Track system shall have a ten year warranty from date of shipment.

MECHANICAL Lighting Track shall be constructed of .070 (2mm) extruded aluminum with overall height of 1.42 (36mm) and overall width of 1.812 (46mm). Track shall have same overall dimensions and physical appearance for both one and two circuit models.

Track shall be available in nominal 4 foot (1.2m), 8 foot (2.4m), and 12 foot (3.7m) lengths, in Silver, Black, White, or Graphite high temperature baked paint finish. Track shall be field cuttable to any length with a single cut.

Track system shall be available with End Feed, End Cap, Straight Mini-Joiner, Straight Joiner/Feeder, Flexible Joiner and L, T, and X Joiner/Feeders as standard components.

Track shall have the ability to be directly surface mounted. Track shall have pre-punched mounting slots for direct mounting to any surface. Track shall have the ability to: be mounted 1/2 inch (13mm) from a surface by extruded aluminum mounting clips, be suspended from a surface by a field cuttable stainless steel cable system, be suspended from a surface by a field cuttable steel stem system, and be mounted into UniTrack housing.

ELECTRICAL Lighting Track and components shall be UL and CUL listed, CE Certified, and comply with the National Electric Code standards for Lighting Track. One and two circuit Lighting Track shall be rated at 120/250 volt, 50/60 Hz. 2400 watts maximum each circuit. Each 20 amp/120 volt circuit shall be comprised of flat copper busbars and have a separate neutral busbar for each circuit busbar. The neutral busbar shall be oversized to be comparable to #10 gauge 30 amp wire to reduce the possibility of overheating due to non-linear loads and harmonics. **Track shall have integral wiring channels for six (6) additional #12 THHN wires to create three (3) additional 20 amp/120 volt circuits, which can be dropped into any Joiner/Feeder, for a total track power capacity of 100 amps.** A separate grounding busbar shall be integral in all track lengths. All busbars shall be insulated to prevent contact with aluminum extrusion.

Track shall have electric feed capability through all Joiner/Feeders (except Flexible Joiner and Straight Mini-Joiner) using either 1/2 or 3/4 U.S. trade size knock-outs (.875 diameter [22mm] or 1.125 diameter [29mm]). Joiner/Feeders can be electrically field modified by removing the Lexan™ cover and rerouting internal pre-wired jumpers. All Joiner/Feeders shall be available in Black, White, Silver, and Graphite GE fiber reinforced Lexan™.

One and two circuit Lighting Track with separate neutral busbars shall have the ability to have each circuit separately dimmed as required when using standard voltage and low voltage fixtures with either magnetic or electronic transformers. Track shall have the ability to be dimmed or switched in selected sections in addition to dimming or switching an entire track configuration or track run.

FIXTURE FITTING INTERFACE Track shall accept GE fiber reinforced Lexan™ fixture fittings which positively lock into track and cannot be energized by the integral switch until safety interlock handle is in the closed position. Safety interlock shall also prevent fixture fitting removal from track unless the switch is in the "off" position. Upon insertion of fixture fitting into track, grounding connection from fixture fitting to track shall be automatically completed before any electrical contact is made with busbars. When removing fixture fitting from track, the grounding connection shall automatically be disconnected last. The fixture fitting shall recess into the track, creating a minimal profile below the track. Fixture fittings for magnetic low voltage fixtures shall be furnished with fuse of the correct ampere rating for integral transformer protection, and shall not be fused as a branch circuit.

One Ckt 120/250V Track

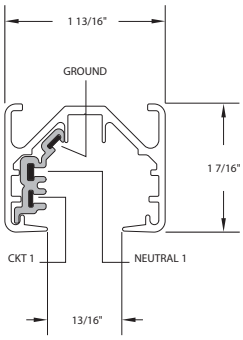

Two Ckt 120/250V Track

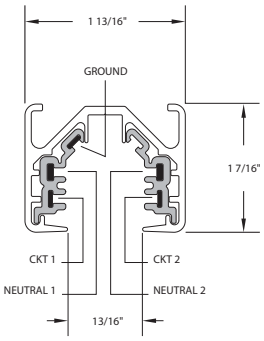

SURFACE TRACK (120/250V) • COMPONENTS

Key Features / Applications

UL and CUL listed, CE Certified, Dry Location • IBEW union made at LSI plant in USA • Specification grade heavy duty .070 (2mm) extruded aluminum track • 4 foot (1.2m), 8 foot (2.4m) and 12 foot (3.7m) field cuttable lengths • One circuit 20 amp or two circuit 40 amp capacity/120/250 volt • 100 amp total capacity when using integral wireways • Copper busbars equivalent to #12 AWG wire used as circuit and ground track conductors • Oversized copper busbars equivalent to #10 AWG wire used as neutral track conductors • Separate neutral track conductor used for each circuit • Separate copper grounding busbar used throughout track system • Black, White, Silver, and Graphite finishes • All Joiner/Feeders, Flexible Joiners, Mini-Joiners, End Feeds and End Caps are injection molded of GE fiber reinforced Lexan™ • All Joiner/Feeders and Flexible Joiners are prewired and simply couple into track • All Joiner/Feeder circuits can be easily field modified by changing internal jumper wires • Fixture fitting recesses into track for minimum profile • LSI surface track can be mounted directly to any surface 5'-0" above finished floor.

Surface Track Sections

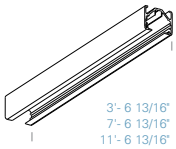

120/250V Surface Track Sections are used in conjunction with an End Feed, End Cap and a variety of Joiner/Feeders to form track runs and configurations. Track Section lengths are nominal 4 foot (1.2m), 8 foot (2.4m) and 12 foot (3.7m) which are field cuttable.

		Nominal Length		
Finish		4 ft	8 ft	12 ft
Silver	One Ckt	31010	31020	31030
	Two Ckt	32010	32020	32030
Black	One Ckt	31210	31220	31230
	Two Ckt	32210	32220	32230
White	One Ckt	31310	31320	31330
	Two Ckt	32310	32320	32330
Graphite	One Ckt	31410	31420	31430
	Two Ckt	32410	32420	32430

Bridge Track

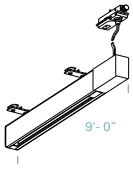

120/250V Bridge Track is a complete, portable, field cuttable, surface UniTrack system that mechanically and electrically mounts to and spans parallel runs of LSI Track. Bridge Track provides an additional range of striking angles for track lighting fixtures or for centering a fixture over a target located between parallel runs of track up to 8 foot (2.4m) on center.

Finish		9 ft
Silver	One Ckt	31025
Black	One Ckt	31225
White	One Ckt	31325
Graphite	One Ckt	31425

Emergency/Worklite Track

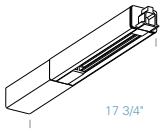

120/250V Emergency/Worklite Track is a separately fed one circuit Track Section, suitable for most LSI track fixtures, that integrates into any LSI Track run or configuration at any location. Consult fixture cutsheet. LSI fixtures (add suffix EF) mechanically lock into Emergency/Worklite Track by means of special hardware and do not have on/off switches.

	All One Ckt			
Finish	18" Joiner Section	18" End Feed Section	18" End Cap Section	18" Conduit End Feed Section
Silver	31050	31051	31052	31053
Black	31250	31251	31252	31253
White	31350	31351	31352	31353
Graphite	31450	31451	31452	31453

Unimount

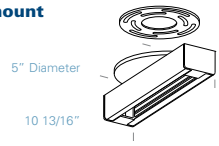

120/250V Unimount is a compact canopy mount Track section which will accept most single LSI Track fixtures up to 500 watts.

Finish		
Silver	One Ckt	31161
Black	One Ckt	31261
White	One Ckt	31361
Graphite	One Ckt	31461

End Feed

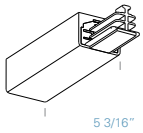

120/250V End Feed is used in conjunction with a Canopy Kit for top feeding from a recessed outlet box and can also be top fed directly with cable.

Finish		
Silver	One Ckt	31100
	Two Ckt	32100
Black	One Ckt	31200
	Two Ckt	32200
White	One Ckt	31300
	Two Ckt	32300
Graphite	One Ckt	31400
	Two Ckt	32400

Project: IERBYS
Project #: 12141

Date: 27 March 2013
265000
Final Construction Documents

Type: F6T

LIGHTING CONTROL CUT SHEET Note: This document is for information only. Refer to specifications for all catalog numbers, etc.

Horton Lees Brogden Lighting Design 8580 Washington Blvd Culver City CA 90232 310 837 0929 voice | 310 837 0902 fax www.HLBlighting.com

End Feed for Conduit Connector

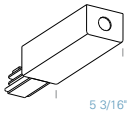

120/250V End Feed for Conduit Connector is used when feeding directly into the end of an End Feed. Connector supplied with 1/2" US trade size hole.

Finish		
Silver	One Ckt Two Ckt	**31102** **32102**
Black	One Ckt Two Ckt	**31202** **32202**
White	One Ckt Two Ckt	**31302** **32302**
Graphite	One Ckt Two Ckt	**31402** **32402**

Portable Feed

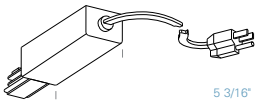

120/250V Portable Feed is used when a portable or temporary track hookup is desired. Supplied with 15 foot #16 AWG-10 Amp/125 Volt 3 wire flexible cord with NEMA 5-15P grounding plug. Non-UL listed.

Finish		
Silver	One Ckt	**31101**
Black	One Ckt	**31201**
White	One Ckt	**31301**
Graphite	One Ckt	**31401**

Straight Joiner/Feeder

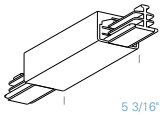

120/250V Straight Joiner/Feeder is used to mechanically and electrically couple any two lengths of track in a straight line. Straight Joiner/Feeder can also be top fed to energize the track from a recessed outlet box when used in conjunction with appropriate Canopy Kit or can be top fed directly with cable.

Finish		
Silver	One Ckt Two Ckt	**31104** **32104**
Black	One Ckt Two Ckt	**31204** **32204**
White	One Ckt Two Ckt	**31304** **32304**
Graphite	One Ckt Two Ckt	**31404** **32404**

Straight Mini-Joiner

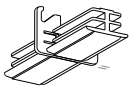

120/250V Straight Mini-Joiner is used to mechanically and electrically couple any two lengths of track in a straight line. Add .125 (3mm) for Straight Mini-Joiner when calculating overall lengths of straight runs or configurations (overall lengths are not the same as when using Straight Joiner/Feeder). Not for use as feeder.

Finish		
Silver	One Ckt Two Ckt	**31111** **32111**
Black	One Ckt Two Ckt	**31211** **32211**
White	One Ckt Two Ckt	**31311** **32311**
Graphite	One Ckt Two Ckt	**31411** **32411**

L Joiner/Feeder

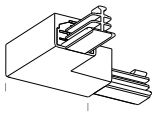

120/250V L Joiner/Feeder is used to mechanically and electrically couple any two lengths of track in an L right angle configuration. This L Joiner/Feeder can also be top fed to energize the track from a recessed outlet box when used in conjunction with appropriate Canopy Kit or can be top fed directly with cable.

Finish		
Silver	One Ckt Two Ckt	**31105** **32105**
Black	One Ckt Two Ckt	**31205** **32205**
White	One Ckt Two Ckt	**31305** **32305**
Graphite	One Ckt Two Ckt	**31405** **32405**

T Joiner/Feeder

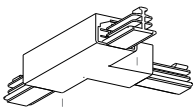

120/250V T Joiner/Feeder is used to mechanically and electrically couple any three lengths of track in a T configuration. This T Joiner/Feeder can also be top fed to energize the track from a recessed outlet box when used in conjunction with appropriate Canopy Kit or can be top fed directly with cable. Internal Joiner wiring can be field modified. Note that in the one circuit version, a right or a left T must be ordered and must be used directly opposite each other when used in a configuration so that busbar continuity is maintained. For two circuit track, a left and right T is not necessary.

Finish		Left Joiner	Right Joiner
Silver	One Ckt Two Ckt	**31106** **32108**	**31107** **32108**
Black	One Ckt Two Ckt	**31206** **32208**	**31207** **32208**
White	One Ckt Two Ckt	**31306** **32308**	**31307** **32308**
Graphite	One Ckt Two Ckt	**31406** **32408**	**31407** **32408**

SURFACE

SURFACE TRACK (120/250V) • COMPONENTS

X Joiner/Feeder

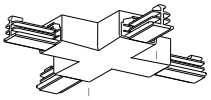

120/250V X Joiner/Feeder is used to mechanically and electrically couple any four lengths of surface track in an X configuration. This X Joiner/Feeder can also be top fed to energize the track from a recessed outlet box when used in conjunction with appropriate Canopy Kit or can be top fed directly with cable.

Finish				
Silver	One Ckt	31109	Two Ckt	32109
Black	One Ckt	31209	Two Ckt	32209
White	One Ckt	31309	Two Ckt	32309
Graphite	One Ckt	31409	Two Ckt	32409

Flexible Joiner

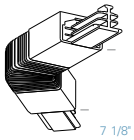

120/250V Flexible Joiner is used to mechanically and electrically couple any two lengths of surface mount track to create angles from 0° (straight) through 90° (right angle). The Flexible Joiner can be flexed in either horizontal or vertical planes. Not for use as feeder.

Finish				
Silver	One Ckt	31112	Two Ckt	32112
Black	One Ckt	31212	Two Ckt	32212
White	One Ckt	31312	Two Ckt	32312
Graphite	One Ckt	31412	Two Ckt	32412

End Cap

120/250V End Cap is used for mechanically ending any straight run, individual Track Section, or open configuration Track Section.

Finish		
Silver	One & Two Ckt	30103
Black	One & Two Ckt	30203
White	One & Two Ckt	30303
Graphite	One & Two Ckt	30403

Current Limiter

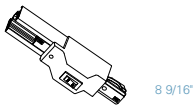

LSI Track Current Limiters integrate directly into single circuit runs, available in the following amperages: 3 AMP (360 Watts); 5 AMP (600 Watts); 8 AMP (960 Watts); 12 AMP (1440 Watts).

Finish	3 AMP	5 AMP	8 AMP	12 AMP
Silver	TCL3S	TCL5S	TCL8S	TCL12S
Black	TCL3B	TCL5B	TCL8B	TCL12B
White	TCL3W	TCL5W	TCL8W	TCL12W
Graphite	TCL3G	TCL5G	TCL8G	TCL12G

Adjustable Angle Bracket

The Adjustable Angle Bracket for Flex Joiner is designed to attach to cable mounted track. This assembly locks the set angle of a Flex Joiner when there is no rigid mounting means.

Finish		
Silver	One & Two Ckt	30116
Black	One & Two Ckt	30216
White	One & Two Ckt	30316
Graphite	One & Two Ckt	30416

Raceway Cover

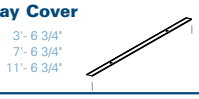

Field cuttable Raceway Covers are used to enclose additional lay-in circuit wiring in top section of track.

	Nominal Length		
Finish	4 Ft	8 Ft	12 Ft
Galvanized	30613	30614	30615

Track U-Ground Outlet

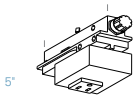

120/250V Track U-Ground Outlet provides a convenient switched and fused U-Ground receptacle for power and is rated at 5A-120V. Non-UL listed.

Finish		
Silver	One & Two Ckt	31160
Black	One & Two Ckt	31260
White	One & Two Ckt	31360
Graphite	One & Two Ckt	31460

Display Hook

Display Hook is used to mechanically hang an item from the track without electrifying it. Do not exceed 20 lbs. at minimum spacing of two feet.

Finish		
Silver	One & Two Ckt	30761

Weight Support Bar

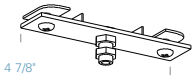

Weight Support Bar provides threaded nipple and nuts to mount an item to track without electrifying it. Do not exceed 20 lbs. at minimum spacing of two feet. Nipple size 1/8-27 NPS (.406 diameter).

Finish		
Silver	One & Two Ckt	30762

Track Closure Cover

Field cuttable Noryl Track Closure Covers are used to enclose the open face of the track, and simply snap into place.

	Nominal Length		
Finish	4 Ft	8 Ft	12 Ft
Silver	30165	30166	30167
Black	30265	30266	30267
White	30365	30366	30367
Graphite	30465	30466	30467

Project: IERBYS

Project #: 12141

Date: 27 March 2013
265000
Final Construction Documents

Type: F6T

LIGHTING CONTROL CUT SHEET Note: This document is for information only. Refer to specifications for all catalog numbers, etc.

Horton Lees Brogden Lighting Design 8580 Washington Blvd Culver City CA 90232 310 837 0929 voice | 310 837 0902 fax www.HLBlighting.com

SURFACE TRACK (120/250V) • INSTALLATION

General Notes

When installing or using this track system, basic safety precautions should always be followed, including the following: Read all instructions. Do not install this track in damp or wet locations. Do not install any part of the track system less than five feet from floor. Do not install any fixture assembly closer than six inches from any curtain or similar combustible material. Disconnect electrical power before adding to or changing the configuration of the track. Check with a qualified electrician. Do not attempt to energize anything other than lighting track fixtures on the track. To reduce the risk of fire and electric shock, do not attempt to connect power tools, extension cords, appliances and the like to the track. Install per NEC and local codes. Save these instructions.

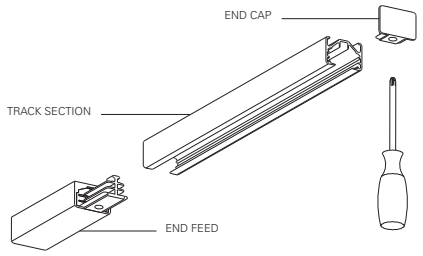

Assembling

Insert End Cap, End Feed or any other Joiner/Feeder completely into Track Section and tighten the recessed Phillips head screw. Do not use excessive force when inserting components into Track Section.

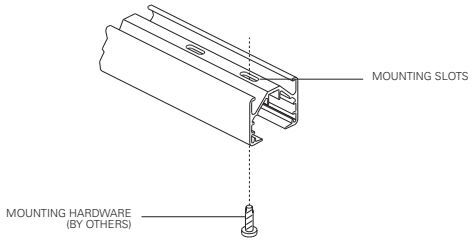

Mounting

Fasten track directly to surface through pre-punched mounting slots with hardware (by others) capable of withstanding a 50 lb. pull. Mount track in compliance with NEC Lighting Track Article #410-101 (Installation), #410-104 (Fastening) and any other applicable codes. To prevent distortion of the track opening which may prevent insertion of fixture fittings, do not over tighten mounting screws. LSI recommends a minimum of two mounting points per section of track. LSI track can be mounted on centers up to 6'- 0".

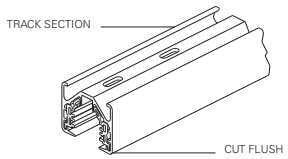

Field Cutting

LSI track can be easily field cut using a sharp hacksaw or a chop saw with a blade for non-ferrous metals, such as Oldham commercial carbide series metal blade. Together, cut the aluminum track, Noryl™ insulation, and copper with one straight cut. All pieces must be exactly the same length. Be sure to remove any burrs on the aluminum or the copper as this may affect the electrical and mechanical interconnection of components to track. Do not cut track to less than one foot in length.

SURFACE TRACK (120/250V) • INSTALLATION

Electrical

Remove the Lexan™ cover from any End Feed or Joiner/Feeder, bring wires through combination 1/2, 3/4 U.S. trade size knock-out (.875 diameter [22mm], 1.125 diameter, [29mm]) in conduit plate and attach conductors to identified terminals. Joiner/Feeders can be electrically field modified after removal of Lexan™ cover by rerouting internal pre-wired jumpers.

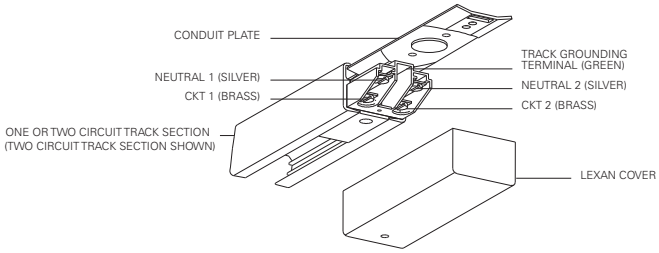

Additional Circuits

LSI Track has integral wiring channels for six additional #12 THHN wires to create three additional 20 amp circuits with separate neutrals. Place conductors in wiring channels and slide raceway covers into track prior to mounting.

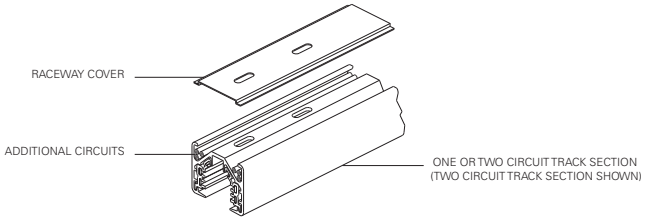

Installing LSI Fixtures

To insert a fixture fitting into the track, the switch must be in the "off" position, with the handle open. Insert the fixture fitting straight up into the track until it seats evenly, close handle completely, switch on. If using one circuit track, make sure that the brass contacts which protrude from the side of the fixture fittings are inserted facing the copper busbars. If using two circuit track, inserting the fixture fitting in one direction will connect to circuit one. Removing and reversing the direction of the fitting will connect to circuit two.

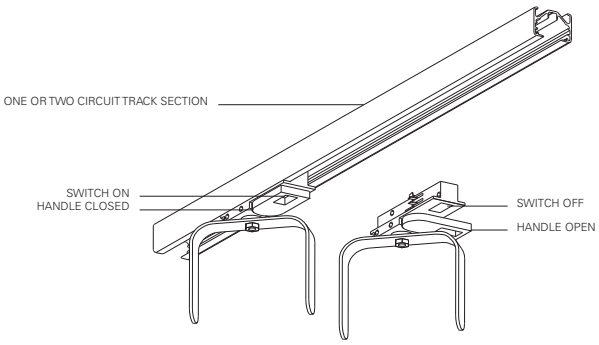

www.techlighting.com

TECH LIGHTING®

Unilume LED Undercabinet System

Undercabinet lighting was one of the first applications to go LED. Since that time, there has been little in the way of innovation. That is because most undercabinet fixtures were designed around traditional undercabinet housings and discrete LEDs. The result: Hot spots. Glare. Multiple shadows on the surface. Unnecessarily deep housings. Poor or non-existent dimming.

Until now.

Tech Lighting is proud to introduce Unilume LED undercabinet, the latest innovation in LED undercabinet lighting. Utilizing tightly clustered blue pump LEDs, a 98% reflective mixing chamber and an Intematix ChromaLit™ remote phosphor lens, the result is consistent illumination with ultra high efficiency – all in a housing that is less than ¾ of an inch deep. An integrated LED driver makes installation easy and allows smooth dimming down to 15% using a TRIAC or ELV dimmer.

Perfect not only for the home, but also for the office, retail displays and more.

INDUSTRIES SERVED

Assisted Living
Custom Closets
Display / POP
Healthcare
Hotels
Libraries
Museums
Offices / Cubicles
Residential
Restaurants
Retail
Schools
Universities

CUSTOM CAPABILITIES

Color Temperature
Color Rendering Index (CRI)
Length
Finish

Project: IERBYS

Project #: 12141

Date: 27 March 2013
265000
Final Construction Documents

Type: F7

LIGHTING CONTROL CUT SHEET Note: This document is for information only. Refer to specifications for all catalog numbers, etc.

TECH LIGHTING'S **UNILUME** LED UNDERCABINET SOLUTION VS. TYPICAL LED UNDERCABINET

Tech Lighting's **Unilume** LED Undercabinet	Typical LED Undercabinet
- **REMOTE PHOSPHOR SOLUTION** Thirty LEDs per foot, 98% reflective mixing chamber and Intematix Chromalit™ remote phosphor lens, consuming just 8.5 and 10.5 watts for the 13" and 19", respectively.	A few discrete LEDs spaced several inches apart.
- **CONSISTENT, EVEN ILLUMINATION** Because the entire remote phosphor lens illuminates, we are able to achieve an extremely consistent and even wash of light. This is both attractive and easier on the eyes when viewed from below.	When viewing the fixture from below, each LED appears extremely glary – particularly in the sight-line of a young child. Unattractive dots of light appear on any reflective surface below like a granite countertop.
- **ELIMINATES DISTRACTING 'MULTI-SHADOWS'** Because the entire remote phosphor lens is illuminated, multiple shadows are not produced. Therefore it is much more desirable to view objects below. This is particularly helpful in a task application (e.g. working on a cutting board) or when displaying merchandise.	Each point source of light hits an object beneath at a different angle and creates a shadow at that angle. For every LED, a unique shadow is created. Thus, a 12 inch LED solution that uses four individual LEDs creates four distracting shadows beneath the object.
- **WIDE BEAM DISTRIBUTION** The entire phosphor lens is illuminated and sits at the surface of the housing creating a much wider beam distribution. This makes it possible to use fewer undercabinet units spread at greater distances with more even output over the entire space.	LEDs are typically recessed into the housing or hidden behind a diffusing lens. This causes light cut-off at the edges.
- **COLOR CONSISTENCY OVER TIME** The phosphor sits away from the LED and remains cooler over time. Therefore the phosphor does not experience the same level of degradation.	Overtime, LEDs can experience some level of color shift. This is caused in large part by the degradation of the phosphor that sits directly on the LED due to heat coming directly off the LED.
- **HIGH EFFICIENCY** With the remote phosphor lens, we do not need a secondary diffusing lens. This helps us achieve 50-60+ lumens per watt depending on length.	In order to minimize glare created by individual LEDs, most traditional products utilize a diffusing lens. This typically creates an efficiency loss of 15% to 35%. In fixtures without a diffusing lens, high efficiency can be achieved at the cost of significant glare.
- **MULTIPLE COLOR TEMPERATURE AND CRI OPTIONS** Offered in 2700K and 3000K color temperatures. Additional color temperatures are easily available on a custom basis (contact the factory). 80+ CRI (Color Rendering Index) or 90+ CRI for more discerning applications.	Typically offered in only a single color temperature option and 80 CRI (Color Rendering Index).
- **INTEGRATED DRIVER AND SMOOTH DIMMING** 120 volt input makes installation easy. Smooth dimming down to 15% using a TRIAC or ELV dimmer. Jumper cables make it easy to link one unit to another. Each unit has an integrated on-off switch.	May require an external power supply making installation more complicated. Dimming may be non-existent or require a more expensive low-voltage electronic dimmer.
- **RUGGED, MINIMALIST DESIGN** Heavy gauge aluminum housing with die-cast steel end-caps and less than ¾ of an inch deep. Can be mounted vertically or horizontally.	Thinner gauge housing and plastic components, often in housings 1-1.5 inches deep.

Project: IERBYS

Project #: 12141

Date: 27 March 2013
265000
Final Construction Documents

Type: F7

LIGHTING CONTROL CUT SHEET Note: This document is for information only. Refer to specifications for all catalog numbers, etc.

WHAT IS REMOTE PHOSPHOR TECHNOLOGY?

Most white LEDs are actually blue LEDs with a phosphor coating. The phosphor absorbs the blue light and re-emits the photons at longer wavelengths which we perceive as white light. In most lighting applications, the phosphor is directly on the LED chip; and this is the right approach for many applications. However, by utilizing a remote phosphor solution – a linear phosphor lens that sits above the LEDs – we are able to achieve performance levels not possible with traditional LED undercabinet lights.

Project: IERBYS

Project #: 12141

Date: 27 March 2013
265000
Final Construction Documents

Type: F7

LIGHTING CONTROL CUT SHEET Note: This document is for information only. Refer to specifications for all catalog numbers, etc.

13" Black Shown Off

19" White Shown Off

UNILUME LED UNDERCABINET

700UCF	LENGTH	CRI	COLOR TEMPERATURE	FINISH	LAMP TYPE
	13 13.2"	**8** 80+	**2** 2700K	**B** BLACK	**-LED** LED
	19 19.2"	**9** 90+	**3** 3000KA	**W** WHITE	

TECHNICAL SPECIFICATIONS*

	13" Length	19" Length
System Power:	8.5 watts	10.5 watts
System Lumens:	432	645
System Efficacy:	51 lms/watt	61 lms/watt
Color Temperature:	2700K, 3000K	
Color Rendering Index:	80+, 90+	
Rated Average Life:	50,000 hours to 70%	
Power Factor:	0.94	
Dimming:	To 15% with TRIAC or ELV Dimmer	
Warranty:	5 Years	

*Based on 3000K, 80+ CRI option

ACCESSORIES

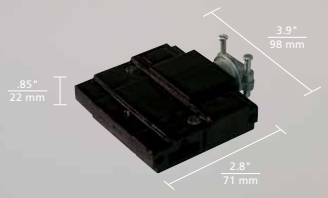

SPLICE BOX

Required for hardwire applications. The 1" Jumper Connector can be used to place the Splice Box next to the Undercabinet Housing or a longer Jumper Connector can be used to place the Splice Box in a more convenient or remote location. Includes Romex/½ conduit connector.

700UCSB	FINISH
	B BLACK
	W WHITE

JUMPER CONNECTORS

Can be used to link one Undercabinet Housing to another or to a Splice Box.

Link up to 71 units of the 13" and 57 units of the 19".

700UCJC	LENGTH*	COLOR
	01 1"	**B** BLACK
	03 3"	**W** WHITE
	12 12"	
	24 24"	

PLUG-IN WALL FEED

Can be used to plug one Undercabinet Housing directly into an outlet.

700UCPL	LENGTH*	COLOR
	24 24"	**B** BLACK
	72 72"	**W** WHITE

*For custom lengths, contact our factory

TECH LIGHTING®

7400 Linder Ave Skokie, IL 60077
T 847 410 4400 F 847 410 4500
www.techlighting.com

921TLUNILUME12

© 2012 Tech Lighting, L.L.C. All rights reserved. The "Tech Lighting" graphic is a registered trademark of Tech Lighting. Tech Lighting reserves the right to change specifications for product improvements without notification.

generation brands

Project: IERBYS

Date: 27 March 2013
265000
Final Construction Documents

Type: F7

Project #: 12141

LIGHTING CONTROL CUT SHEET Note: This document is for information only. Refer to specifications for all catalog numbers, etc.

luminii
Lighting for the future, today.

Kendo 45-M | Linear illumination system

Extruded aluminum linear illumination system, Kendo 45-M is available in sections up to 76" long. Specifically designed LED engine provides constant illumination levels from the beginning to the end of the runs. The Kendo 45-M can be easily recessed or surface mounted for general illumination, architectural accents, under and above cabinet lighting, display cases and many other applications. Available with 72" plenum rated lead wires or quick-connect end feed.

Kendo 45-M

Recessed installation

Surface-mounted with bracket

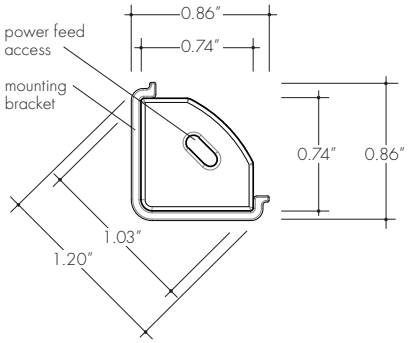

Made in USA

Finish options

Black anodized | Bronze anodized | Silver anodized | White powder coated

Technical information

Light engine: LEDs 2.4 watt/ft (SO - standard output) or 3.2 watt/ft (HO - high output)

CRI: 70+ Standard, 80-91 High

Color temperature: 2400K (only standard CRI), 2700K, 2900K, 3500K (only high CRI), 4000K

Max run length: 40 feet (SO),30 feet (HO)

Operating Voltage: 24 VDC

Dimming: Low voltage magnetic dimmer - see Luminii website for list of compatible dimmers. Luminii PSD series power supply required.

luminii
Lighting for the future, today.

Kendo 45-M | Linear illumination system

Power supply

PSD series are remote LED power supplies dimmable with low voltage magnetic dimmers.
Available in 110 and 277 VAC input.

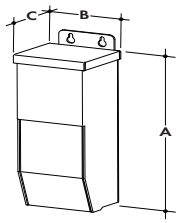

Models	PSD-20-24	PSD-40-24	PSD-60-24	PSD-96-24
A Height	5.03″	5.03″	6.06″	6.10″
B Width	2.14″	2.14″	2.59″	2.60″
C Depth	2.00″	2.00″	2.20″	2.20″
Maximum wattage	20 watt	40 watt	60 watt	96 watt
NEMA 3R outdoor rated	No	No	Yes	Yes

Connectors

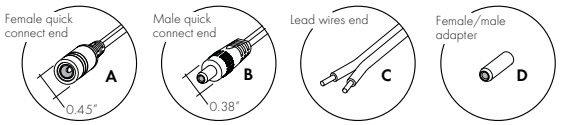

Linking cable options

Male quick disconnect
Part # LMC

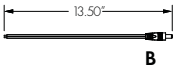

Linking cable 12″
Part # LC-12

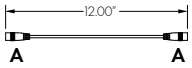

Female quick disconnect
Part # LFC

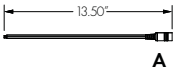

Linking cable 48″
Part # LC-48

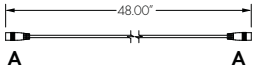

Y-Splitter
Part # LYC

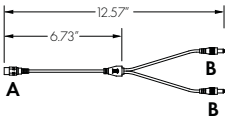

Linking cable 120″
Part # LC-120

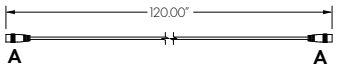

Female/male adapter
Part # FMA

Powerfeed options

F1

F2

F3

F4

Ordering Code

Model	Length	CCT	Output	CRI	Optic	Finish	Mounting	Power Feed
K45M	4	27K	SO	S	C	SA	B	F1
K45M - Kendo 45-M	4″- 76″ (4″ increments)	24K - 2400K* 27K - 2700K 29K - 2900K 35K - 3500K** 40K - 4000K	SO - Standard output HO - High output	S - Standard H - High	C - Clear HF - Half-Frosted F - Frosted M - Medium N - Narrow	SA - Silver anodized BK - Black anodized BZ - Bronze anodized WH - White powder coated	B - Mounting brackets NB - No bracket	F1 - 72″ Lead wires F2 - 72″ Lead wires at one end and quick connect at other F3 - Single quick connect F4 - Dual quick connect

*2400K only available with S (standard) CRI
**3500K only available with H (high) CRI

Project: IERBYS
Project #: 12141

Date: 27 March 2013
265000
Final Construction Documents

Type: F8

LIGHTING CONTROL CUT SHEET Note: This document is for information only. Refer to specifications for all catalog numbers, etc.

luminii
Lighting for the future, today.

Line LED | Linear LED strip - 24V

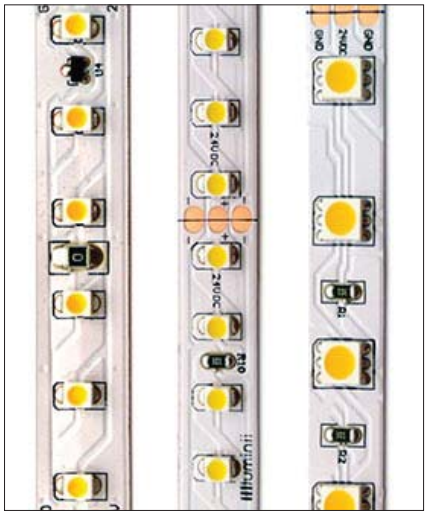

The Line LED is a small profile and energy efficient light strip. It is easily installed directly on to the mounting surface with double sided tape or within discrete mounting extrusions. The durable but flexible circuit board and multiple connector options enable the extension of the light strip and perfect fit for every application.

Applications: Indoor only - above and below cabinets, cove lighting, counter accent, architectural reveals, under banister, display and book cases, etc.

CRI	STANDARD	HIGH
Value range	up to 70	80 - 91
CCT variation	+/- 200K	+/- 75K single bin

Operating voltage
24 VDC

Operating temperature
- 40˚F to 140˚F (- 40˚C to 60˚C)

Average life
50,000 hours

Dimmable
Low voltage magnetic dimmers and PSD series power supply required

Mounting
3M self-adhesive tape. Mounting to an aluminum profile or the HST aluminum heat sink tape is required to reach the rated 50,000 hours average life.

Approvals
Class II damp listed

Technical information

Models	LL2.0	LL2.4	LL3.2
LEDs/ft	36	30	18
Average power consumption	2.0 watt/ft	2.4 watt/ft	3.2 watt/ft
Light output for 2900K	179 lumens/ft	221 lumens/ft	315 lumens/ft
Amperage load at maximum run	4.0 A	4.0 A	4.0 A
Ordering increment	4.00"	2.50"	4.00"
Maximum run length	48 ft	40 ft	30 ft
Dimensions	0.39" W 0.13" H	0.39" W 0.13" H	0.39" W 0.13" H

Section start/end options

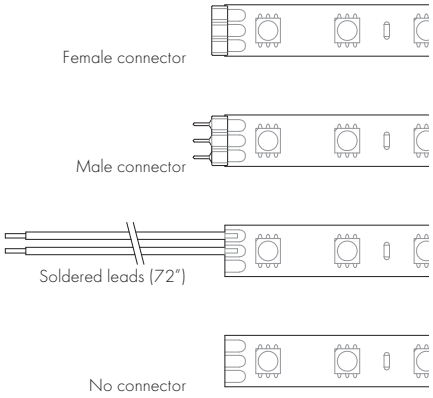

Ordering code

*Please note: LED color temperature availability dependent on CRI of choice

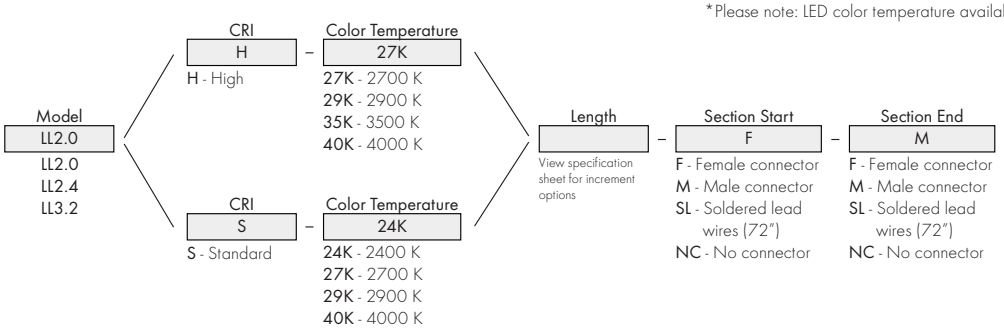

Project: IERBYS
Project #: 12141

Date: 27 March 2013
265000
Final Construction Documents

Type: F8

LIGHTING CONTROL CUT SHEET Note: This document is for information only. Refer to specifications for all catalog numbers, etc.

WAREHOUSE SHADE

Model No. _____

TYPE: _____

JOB NAME:_____

CERTIFICATION: UL LISTED WET LOCATION

MODEL#	A (Height in Inches)	B (Diameter in Inches)
W508	6	8
W512	8	12
W514	9	14
W516	9	16
W518	9	18
W520	10	20

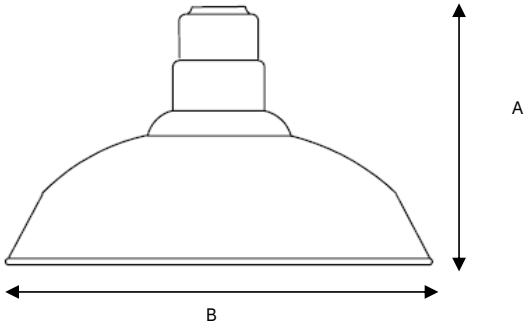

FINISH- Available in high quality powder coat.

LAMP HOLDERS- Accommodates **Incandescent** medium base porcelain socket, copper shell with nicked plate, rated 250V, 660W. **Compact Fluorescent** 4 pin heat resistant thermoplastic socket accommodates 26/32W (Gx24q-3 base) and 42W (Gx24q-4 base). Twist lock design provides for vibration and earthquake resistance, rated 75W, 600V. **High Intensity Discharge (H.I.D.)** medium base, 4KV pulse start socket, rated 660W/600V.

MOUNTING- 1/2" or 3/4" tapped hub is supplied. Top or side mount available. Fixtures are pre-wired with 48" or 96" leads. Available with cord or stem sets.

REFLECTOR- Spun from heavy gauge 1100-0 aluminum, ranging in thickness from .050 to .125. Galvanized is from 20 gauge sheets. Copper is spun from .040 gauge and 110 soft alloy.

MODEL#	FINISH	LIGHT SOURCE		
		INC	CF	HID (MH & HPS)
W508	40,41,42,43,44,45,46,48,49,50, 51,52,53,54,55,57,58,59,60,61, 62,63	100W	26W*	25W*
W512		100W	26,32,OR 42W*	35,50,70, or 100W*
W514		150W	26,32,OR 42W*	35,50,70, or 100W*
W516		200W	26,32,OR 42W*	35,50,70, or 100W*
W518		300W	26,32,OR 42W*	35,50,70,100,150, or 175W*
W520		300W	26,32,OR 42W*	35,50,70,100,150, or 175W*

*** FOR REMOTE BALLAST SEE MOUNTING SOURCE**
GLASS:
MOUNTING SOURCE:
ACCESSORIES:

PHONE: 877-999-1990
FAX: 877-999-1955

12260 EAST END AVE. CHINO, CA 91710

c UL LISTED
wet location

Project: IERBYS

Project #: 12141

Date: 27 March 2013
265000
Final Construction Documents

Type: FX1

LIGHTING CONTROL CUT SHEET Note: This document is for information only. Refer to specifications for all catalog numbers, etc.

WALL MOUNTS

B10

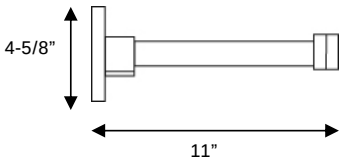

B11

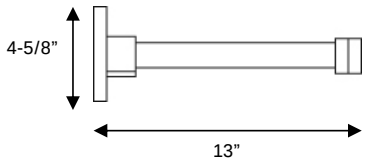

WM10

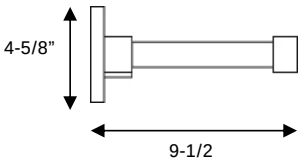

WM11

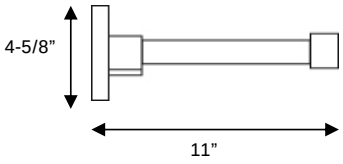

WM12

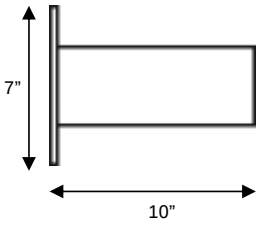

WM13

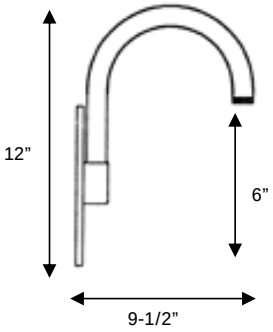

WM13X*

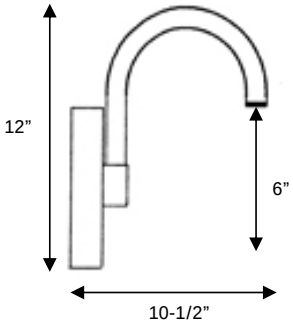

*Compact Flourescent or H.I.D. Housing

WM14

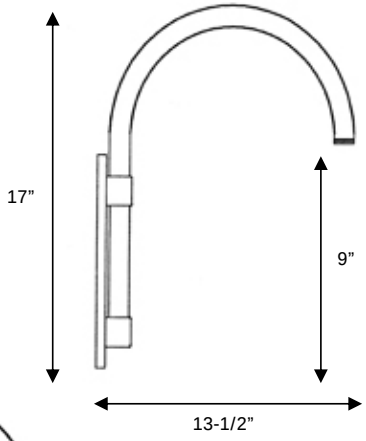

WM25

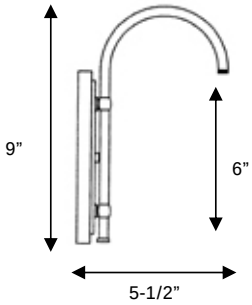

WM15*

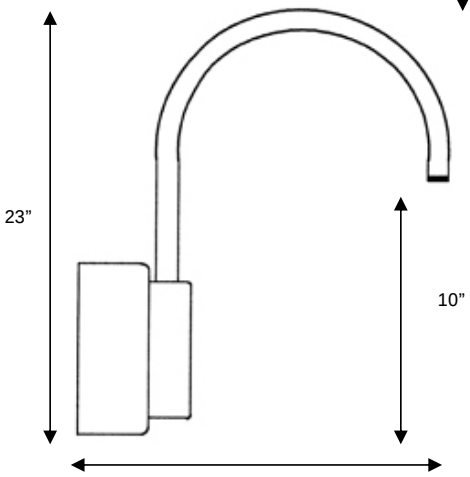

*Compact Flourescent or H.I.D. Housing

WM26

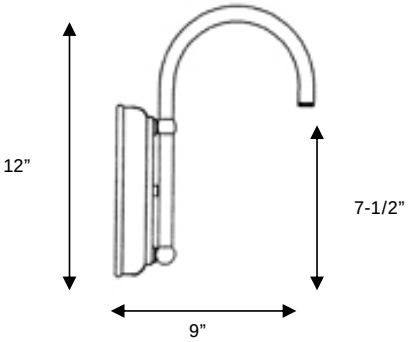

Project: IERBYS

Project #: 12141

Date: 27 March 2013
265000
Final Construction Documents

Type: FX1

LIGHTING CONTROL CUT SHEET Note: This document is for information only. Refer to specifications for all catalog numbers, etc.

Home | Search | Sales Rep | About | Ordering | Contact

- Shade
- Vapor Jars
- Bollards
- Bulkheads
- Commercial Retail Lighting
- Sign Lighting
- Foodwarmers
- Mounting Options
- Ballast
- Literature
- Photometric - IES files
- Gallery

As Seen On
EXTREME MAKEOVER Home Edition
Visit abc.com for more details

Glass Options

Incandescent or Compact Fluorescent

CL3 CL4 | FR3 FR4 | PR3 PR4 | BL3 BL4 | RE3 RE4 | GR3 GR4 | AH3 AH4

BAX* | OC* | BA* | FN*

BAF

Max. Wattage					
INC-100W	INC-200W	CF-26W	CF-42W		INC-150W
CL3	CL4	BA*	CL3	CL4	FN*
FR3	FR4		FR3	FR4	
PR3	PR4		PR3	PR4	
BL3	BL4		BL3	BL4	
RE3	RE4		RE3	RE4	
GR3	GR4		GR3	GR4	
AH3	AH4		AH3	AH4	
OC*	BAX*		OC*	BAX*	
BA*	BAF*			BAF*	

* Not available with HID lamp source

HID

CLT3 CLT4 | FRT3 FRT4 | PRT3 PRT4

Max. Wattage	

Project: IERBYS
Project #: 12141

Date: 27 March 2013
265000
Final Construction Documents

Type: FX1

LIGHTING CONTROL CUT SHEET Note: This document is for information only. Refer to specifications for all catalog numbers, etc.

electrix ILLUMINATION

PROJECT NAME :

LUMINAIRE TYPE :

L140W LumiLine | Wet

Construction:
- Extruded aluminum housing with satin anodized finish
- Low profile design with lengths ranging from 20" to 50"
- Proprietary optics are UV stable and optimized for transmission
- Numerous stainless steel and aluminum mounting solutions

Electrical:
- Dimmable, high flux LEDs availalble in either 3000K or 4000K
- Solid state low voltage luminaires powered with 24V DC
- Electronic power supplies can be remotely mounted up to 32' **
- UL listed for wet locations: IP65 rating

Performance:
- Average rated LED life of 50,000 hours @ 70% lumen output*
- IES files can be downloaded at www.electrix.com
- All values below are based on initial lumens per foot

Output	Watts/Ft	3000K white	4000K white
Standard	5 watts/ft	258 lumens/ft	308 lumens/ft
High	10 watts/ft	516 lumens/ft	617 lumens/ft

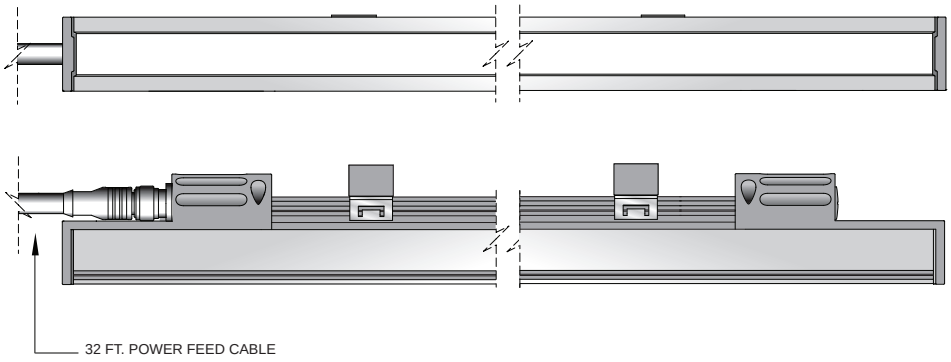

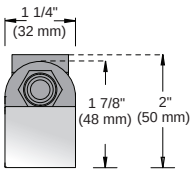

* To ensure proper performance, ambient temperature around luminaire should not exceed 140F. Architectural details should include ventilation around fixture.
** If EMI is a consideration, recommended remote driver distance is 15'

UL RoHS

Project: IERBYS

Project #: 12141

Date: 27 March 2013
265000
Final Construction Documents

Type: FX2

LIGHTING CONTROL CUT SHEET Note: This document is for information only. Refer to specifications for all catalog numbers, etc.

electrix
ILLUMINATION

MOUNTING OPTIONS:

Horizontal Mount

Vertical Mount

Swivel Mount

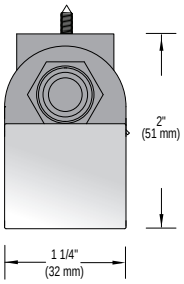

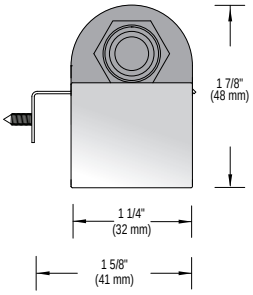

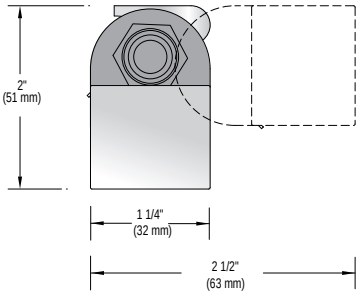

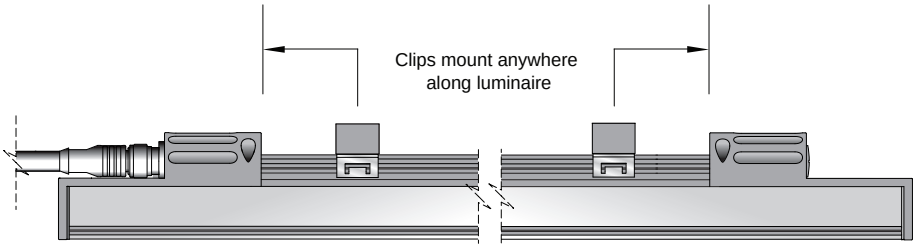

The L140W series is UL listed for wet locations. The fixture was designed for exterior down light applications with minimal space limits. The L140W is not submersible and should not be mounted in conditions where standing water will collect on the lens.

UL RoHS

electrix
ILLUMINATION

PRODUCT INFORMATION:

L140W
PRODUCT

POWER
05 - 5 watts per linear ft
10 - 10 watts per linear ft

LENGTH
20 - 20 3/4" actual
30 - 30 3/4" actual
40 - 40 3/4" actual
50 - 50 3/4" actual

LED COLOR
W3 - 3000K White
W4 - 4000K White

OPTIC
05 - 5 degree
60M - 60 degree lens with micro glare control louver
60C - 60 degree Clear Lens
90F - 90 degree lens with satine diffuser (92% Transm.)

MOUNT
HW - Horizontal Mount Wet
V - Vertical Mount
S - Swivel

POWER CABLE ACCESSORIES:

LEADER FEED CABLE:

LFC-S32: 32 ft. primary feed cable with straight connector. One required per LED feed.

LEADER FEED CABLE:

LFC-A32: 32 ft. primary feed cable with right angle connector.

UL RoHS

© **ELECTRIX, INC.** 45 SPRING STREET NEW HAVEN, CT 06519 ☎ 203.776.5577 203.624.7545 info@electrix.com www.electrix.com

Project: IERBYS
Project #: 12141

Date: 27 March 2013
265000
Final Construction Documents

Type: FX2

LIGHTING CONTROL CUT SHEET Note: This document is for information only. Refer to specifications for all catalog numbers, etc.

electrix ILLUMINATION

LED POWER SUPPLIES - WET LOCATION

96W MAX POWER SUPPLY

- wattage output: 1W (min) to 96W (max)
- input voltage: 120V-277V AC output voltage: 24V DC
- maximum remote driver distance is 32'. **
- dimming driver requires a 0-10V control interface (by others)[1]
- IP65 rating

MODEL: PS96-W

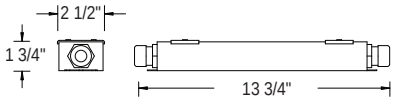

MODEL: PS96D-W dimmable

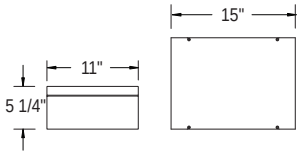

288W MAX POWER SUPPLY

- wattage output: three (3) 96W channels
- input voltage: 120V–277V AC output voltage: 24V DC
- maximum remote driver distance is 32'. **
- dimming driver requires a 0-10V control interface (by others)[1]
- IP65 rating

MODEL: PS288-W

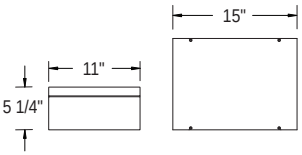

MODEL: PS288D-W dimmable

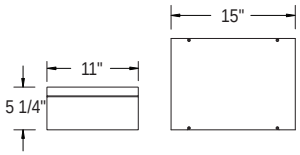

** The remote mounting distance may be exceeded. However, precaution for site condition of electromagnetic interference (EMI) and voltage drop must be considered.

[1] Contact the factory for dimming wire diagram

RoHS

BOCA FLASHER

HPNLS-Lo

Line Voltage Linear LED Strip Fixture

Dimmable monochromatic line voltage fixture fabricated with a variety of options.

The Boca HPNLS-Lo is a small profile fixture well suited for many lighting situations where both space and locating transformers are concerns. This line voltage version* eliminates the need for secondary transformers, making installation contractor friendly. Boca's patented Clean Dim* technology ensures even dimming from 0-100%. The HPNLS-Lo can be fabricated with a range of optics and color temperature choices, affording a multitude of distribution and effect options. The housing is anodized aluminum with a durable finish making it weather and abrasion resistant. It is UL Listed for dry, damp or wet location (model dependent).

* Patent Pending

PROJECT:_____

TYPE:_____

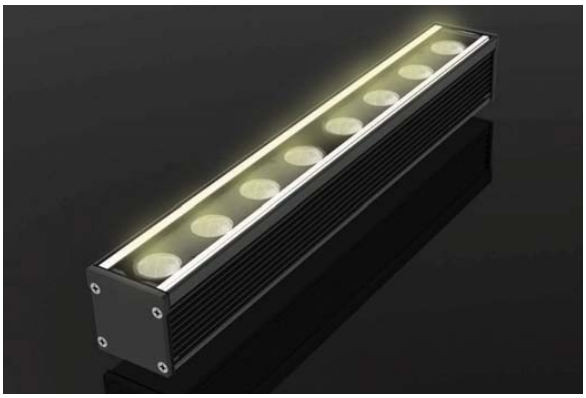

Technical Specifications

Wattage ..... 6 watts or 10 watts or 13 watts per linear foot (model dependent)
Input Voltage ..... 90-120VAC or 230-277VAC
Input Current ..... Model dependent
Control ..... Standard Line Voltage Forward or Reverse Phase Dimming
Power Cable Length ..... UL Standard 6ft
LED Spacing, per strip ..... 2", o.c. (for Lo6), 1.5" o.c. (for Lo8)
Fixture Length ..... 6" increments, (12" minimum)
.....allow 1/4" for each end cap and 1" for power feed cable
Fixture Width ..... 1.68"
Total Height (not including clip) ..... 1.68"
Mounting ..... Fixed or Swivel
Color Options ..... 2700K, 3000K, 3500K, 4000K, 5000K, amber, red, green, blue
Optics available ..... 10°, 24°, 36°, 13°x38°, 120°
Color Rendering Index (CRI) ..... CRI Greater than 90
Exterior Wet Listing Options IP65, IP68

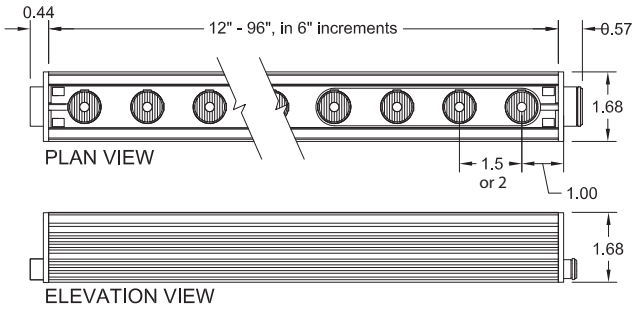

*Fixture is shown with Male/Female rigid connection.
(This is Option 1 on the connections page.)

Key Features

- Compact, variable light fixture for dry, damp or wet location use
- Fixture comes in 6" increments (12" minimum)
- Many options in optics, color temperature, and accessories to suit a range of projects - call factory for additional options
- Three different types of lens
- EMI Filter integral
- Uses standard line voltage dimmers
- Fixtures are compatible with both forward and reverse phase dimming
- Clear aluminum or black finish - check factory for availability
- Contact Boca Flasher for tips on custom installations

Mounting Options

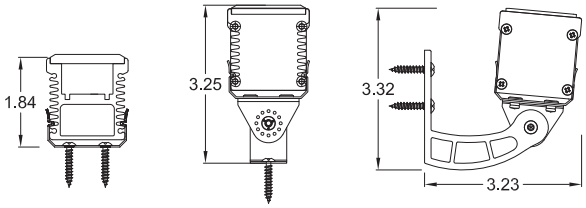

Fixed Spring Clip Bracket

Swivel Accessory with Spring Clip Bracket

Right Angle Arc Bracket with Swivel Accessory

Project Specification

HPNLS	—	—	—	—	—	—	—	—	—
	Wattage: Lo6 = 6 LEDs (6* or 10 watts a lin. ft) Lo8 = 8 LEDs (13 watts a lin. ft) *for 6 watts write Mod6W in Options.	Color Option: 2700K, 3000K, 3500K, 4000K, 5000K, amber, red, green, blue	Optic: 10°, 24°, 36°, 13°x38°, 120°	Voltage: 90-120VAC = 120V 230-277VAC = 277V	Finish: Anodized Aluminum= A Black= B	Location: Interior = I Exterior (IP65) = E Wet (IP68) = W	Mounting: Fixed = F Swivel = S Arc Swivel = Arc		Options: Hexcell louver= HL Diffused Lens= D Satin Ice White = SI See 2nd page for more options.

We are constantly improving our fixtures and reserve the right to change options and specifications. Additional information & details at www.bocaflasher.com.
For specific requirements, contact your Boca sales representative.

Boca Flasher, Inc. 552 NW 77th Street Boca Raton, Florida 33487 USA Phone: 561.989.5338 Fax: 561.982.8323

2012 Boca Flasher, Inc. All rights reserved. All names and trademarks are property of their respective owners REV 101912

Project: IERBYS

Project #: 12141

Date: 27 March 2013
265000
Final Construction Documents

Type: FX3

LIGHTING CONTROL CUT SHEET Note: This document is for information only. Refer to specifications for all catalog numbers, etc.

BOCA FLASHER

HPNLS-Lo

PROJECT:_____

TYPE:_____

Additional Options

Hexcell Louver

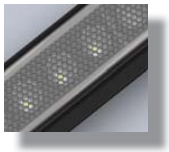

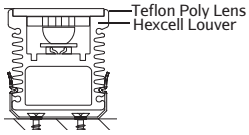

Key Features:

- Economical solution to off axis glare issues
- Louver is located flush to secondary optic, preventing unwanted striation
- Louver can not be utilized when no optic (120°) is specified
- Louver is behind lens to ensure no damage is done during installation or after
- Louver ships pre-fitted making on site fixture installation easy
- No unsightly clips, screws, or brackets
- Can be used with other baffles
- Adds nothing to overall height.
- Additional charges apply - consult your local rep for more information.
- **To specify add "HL" in options box**

Square Baffle

SB

SSB

SKB

Key Features:

- Design cuts off light at 90 degree
- Baffles are lightweight black PVC with non-reflective surfaces to avoid glare from interior sections
- One piece baffle clips onto the extruded housing making installation and removal easy
- Minimal profile size increases - consult factory for more information.
- Only adds 1/2" or 3/4" to overall height
- Additional charges apply - consult your local rep for more information.
- **To specify add "SB" in options box or "SSB" for slanted version or "SKB" for kicker version**

Satin Ice Lens

Diffused

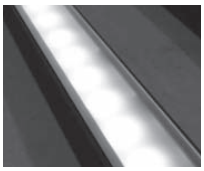

Key Features:

- For use when more diffusion than our clear lens is needed
- Lens is 1/8" (.09) thick and adds 1/16" to overall height of fixture. Thicker lens available. Call factory for more information
- 87% transmission
- Additional charges apply - consult your local rep for more information.
- **To specify add "D" in options box**

White

Key Features:

- For use when more diffusion than our Satin Ice Frost lens is needed
- Best for direct view use.
- Lens is 1/4" (.24) thick and adds 1/8" to overall height of fixture. Thinner lens available. Call factory for more information
- 42% transmission
- Additional charges apply - consult your local rep for more information.
- **To specify add "SI" in options box**

Luminaire Information

FIXTURE TYPE: Lo8, 3500°K, 24°degree optic, 12 inch

Candela Distribution

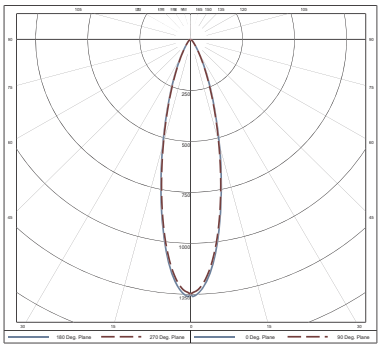

Center Beam Foot Candle & Illumination information

Distance	FtCandles
2 ft	312.5
3 ft	138.9
4 ft	78.1
5 ft	50.0
6 ft	34.7
7 ft	25.5
8 ft	19.5
9 ft	15.4
10 ft	12.5
12 ft	8.7

- Total Lumen Output:
  372.2 Lumens per foot
- Luminaire Efficacy:
  39.3 Lumens per Watt

*For lux multiply footcandles by 10.76
*Foot candle reading taken at 100% capacity

We are constantly improving our fixtures and reserve the right to change options and specifications. Additional information & details at www.bocaflasher.com.
For specific requirements, contact your Boca sales representative.

Boca Flasher, Inc. 552 NW 77th Street Boca Raton, Florida 33487 USA Phone: 561.989.5338 Fax: 561.982.8323

© 2012 Boca Flasher, Inc. All rights reserved. All names and trademarks are property of their respective owners

Project: IERBYS

Project #: 12141

Date: 27 March 2013
265000
Final Construction Documents

Type: FX3

LIGHTING CONTROL CUT SHEET Note: This document is for information only. Refer to specifications for all catalog numbers, etc.

BOCA FLASHER

Ratings: IP68

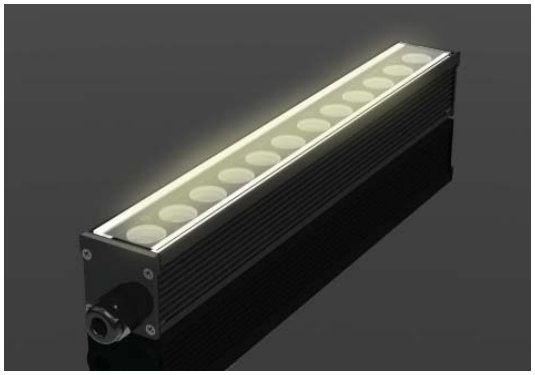

HPNLS-HO

Testing done by: CASCADE TEK
Tests done: Dust and Immersion
Test Specs: Test 1 - CEI/IEC 60529: 2001, (IP-6X)
Test 2 - CEI/IEC 60529: 2001, (IP-X8)
Certification: IP68

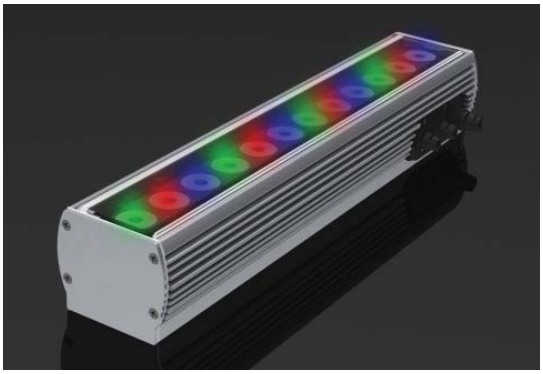

HPCCS

Testing done by: CASCADE TEK
Tests done: Dust and Immersion
Test Specs: Test 1 - CEI/IEC 60529: 2001, (IP-6X)
Test 2 - CEI/IEC 60529: 2001, (IP-X8)
Certification: IP68

HPFB

Testing done by: CASCADE TEK
Tests done: Dust and Immersion
Test Specs: Test 1 - CEI/IEC 60529: 2001, (IP-6X)
Test 2 - CEI/IEC 60529: 2001, (IP-X8)
Certification: IP68

SBL-Mix & SBL-MC

Testing done by: CASCADE TEK
Tests done: Dust and Immersion
Test Specs: Test 1 - CEI/IEC 60529: 2001, (IP-6X)
Test 2 - CEI/IEC 60529: 2001, (IP-X8)
Certification: IP68

Boca Flasher, Inc. 552 NW 77th Street, Boca Raton, Florida 33487, USA, Phone: 561 989 5338, Fax: 561 982 8323

CASCADE TEK

Cascade Technical Sciences, Inc.

TEST DATA FORM DS10

DATE STARTED 3-14-2011	CUSTOMER Boca Flasher	TECHNICIAN SIGNATURE
DATE COMPLETED 3-14-2011	SPECIMEN DESCRIPTION Led Strip Fixture	ENGINEER (SIGNATURE)
TEMPERATURE (LABORATORY) +76°F	TYPE OF TEST Immersion (Re-Test)	ENGINEER Joe Fratello
HUMIDITY (LABORATORY) 31%	TEST SPECIFICATION / PARAGRAPH NUMBER CEI/IEC 60529: 2001, (IP-X8) 14.2.8	JOB NUMBER 1072
SPECIMEN NUMBERS (P/N - S/N) P/N- HPNLS S/N- 1 Sample		

PHOTO - Yes

DATE/TIME	REMARKS	TECH
3-14-11	**TEST SUMMARY:** Expose each sample to immersion in 1.01 meters of water for a period of 6 hours. Upon completion remove samples and perform post exposure visual for water ingress. Water & sample temperature shall not differ by more than 5K.	TA
0858	Begin set up of sample for immersion in 1.01 meter of water.	TA
0927	Set up is complete and begin exposure of sample in 1.01 meter of water for 6 hours. Sample temperature at +21°c & water currently at +19.9°c. Sample non-operating during exposure with pre-exposure weight of 1991.0 grams.	TA
1528	6 hour immersion is complete and remove sample and perform post exposure inspection.	TA
1558	No visible water ingress noted. Return sample to customer for further evaluation.	TA
	- Test Complete -	

Test Data Form DS10-10/04

CASCADE TEK

Cascade Technical Sciences, Inc.

TEST DATA FORM DS10

DATE STARTED	CUSTOMER	TECHNICIAN SIGNATURE
2-28-2011	Boca Flasher	
DATE COMPLETED	**SPECIMEN DESCRIPTION**	**ENGINEER (SIGNATURE)**
3-2-2011	Led Strip Fixture (3) & RGB Brick Light (1)	
TEMPERATURE (LABORATORY)	**TYPE OF TEST**	**ENGINEER**
+70°F	Dust	Joe Fratello
HUMIDITY (LABORATORY)	**TEST SPECIFICATION / PARAGRAPH NUMBER**	**JOB NUMBER**
31%	CEI/IEC 60529: 2001, (IP-6X) Cat. 1 13.4	1072

SPECIMEN NUMBERS (P/N - S/N)

(Run #1)P/N- SBL S/N- 1 Sample & P/N- HPNLS S/N- 1 Sample
(Run #2)P/N- HPCCS S/N- 1 Sample & P/N- HPFB S/N- 1 Sample

PHOTO - Yes

DATE/TIME	REMARKS	TECH
2-28-11	**TEST SUMMARY:** Expose sample to 8 hours of dust exposure with sample under vacuum (2 kPa max.) pressure per specification. Upon completion of exposure perform visual inspection for dust ingress. Due to sample size and quantity, two runs will be performed.	TA
1045	Begin set up of samples (run #1) and chamber for dust exposure.	TA
1332	Set up complete with samples under a vacuum per specification. Begin exposure of 8 hours of settling dust at ambient temperature and samples non-operating.	TA
1605	Continue dust exposure with samples under a vacuum & chamber operating o.k. Chamber and vacuum to run until 8 hours is complete then power down.	TA
3-1-11		
0800	Exposure complete and remove samples from chamber and take post exposure photos.	TA
0845	No visible dust intrusion noted. Samples to remain on-site for further testing.	TA
1230	Begin set up of run #2 samples for exposure,	TA
1400	Set up complete with samples under a vacuum per specification. Begin exposure of 8 hours of settling dust at ambient temperature and samples non-operating.	TA
1604	Continue dust exposure with samples under a vacuum & chamber operating o.k. Chamber and vacuum to run until 8 hours is complete then power down.	TA
3-2-11		
0741	Exposure complete and remove samples from chamber and take post exposure photos.	TA
0814	No visible dust intrusion noted. Samples to remain on-site for further testing.	TA
	- Test Complete -	

Test Data Form DS10-10/04

SECTION 270528

TELECOMMUNICATIONS RACEWAYS AND ACCESSORIES

PART 1 - GENERAL

1.1 DESCRIPTION

A. Provide telecommunication raceways, boxes and all accessories in accordance with the Contract Documents.

1.2 QUALITY ASSURANCE

A. Telephone service provider approval of incoming service installation.

B. Cable television service provider approval of incoming service installation.

1.3 REFERENCE STANDARDS

A. ANSI/TIA/EIA-568-B

B. BICSI (Building Industry Consulting Service International)

C. NEC (National Electrical Code)

D. NEMA VE

E. Telephone service provider requirements.

F. Cable television service provider requirements.

G. NUSIG, with California and local amendments, as applicable.

1.4 SUBMITTALS

A. Conduit and Boxes:
   1. Coordinated conduit layout drawings, 1/8-inch scale minimum. Show routing of all conduits of trade size 2-inch or larger. Show locations of all pull splice or termination (outlet) boxes connected to conduits of trade size 2-inch or larger.

B. Floor Boxes:
   1. Manufacturer's product data sheets.
   2. 1/8-inch scale plans showing box types and locations.
   3. A sample of the box assembled complete with carpet/floor flange, covers, a 6-inch conduit stub and outlet/jacks with 3-foot cable stubs.

C. Fire-Rated Poke-Through Devices:
   1. Manufacturer's product data sheets.
   2. 1/8-inch scale plans showing device locations.
   3. A sample of the poke-through device assembled complete with carpet/floor flange, covers, a 6-inch conduit stub (if applicable) and outlets/jacks with 3-foot cable stubs.

D. J-Hooks and Individual Supports:
   1. Manufacturer's cut sheets.
   2. 1/8-inch scale plans showing major J-hook/cable supports runs.
   3. Details and plans of cable tray supporting methodology.
   4. Seismic restraint calculations for cable tray.

1.5 IDENTIFICATION

A. Mark each telecommunications conduit and box with a unique identifier as required by the Contract Documents.

PART 2 - PRODUCTS

2.1 TELECOMMUNICATION BACKBOARDS

A. Fire-retardant plywood painted with two coats of light-colored paint. Mask one stamp per plywood sheet, so it will remain visible after painting.

05/03/13 PERMIT SET

B. 3/4 inch thick by 8 feet high by length as shown on the Drawings. Extend full height of room for sections above or below floor or wall sleeves.

2.2 ACCEPTABLE MANUFACTURERS

A. Boxes (not exposed in public or tenant areas): UL Listed and labeled products of any manufacturer meeting the specified performance requirements are acceptable.

B. Wall Boxes or Floor Boxes (if exposed in public or tenant areas): FSR, Wiremold, Hubbell, Russell-Stoll, Steel City, Sun West Engineering, or approved equal.

C. Fire-Rated Poke-Through Devices: Wiremold, Hubbell, or approved equal.

2.3 CONDUIT AND FITTINGS

A. Rigid Metal Conduit (RMC):
1. Rigid conduit, heavy wall, threaded ends.
2. Threaded type fittings.

B. Intermediate Metallic Conduit (IMC):
1. Rigid conduit, thinner wall, threaded ends.
2. Threaded type fittings.

C. Electrical Metallic Tubing (EMT):
1. Continuous, seamless steel tubing galvanized or sherardized on exterior, coated on interior with smooth hard finish of lacquer, varnish or enamel.
2. Steel, set screw or compression type fittings. Provide concrete type fittings where required.

D. Flexible Steel Conduit:
1. Single strip, continuous, flexible interlocked double-wrapped steel, hot-dip galvanized inside and out forming smooth internal wiring channel.
2. Steel, compression type fittings.

E. Liquid-Tight Flexible Conduit:
1. Same as flexible steel conduit except with tough, inert, water-tight plastic outer jacket.
2. Fittings shall be cast malleable iron body and gland nut, cadmium-plated with one-piece brass grounding bushings threaded to interior of conduit. Spiral molded vinyl sealing ring between gland nut and bushing and nylon-insulated throat.

F. Rigid Non-metallic Conduit:
1. Schedule 40 polyvinyl chloride suitable for 90 degrees C.
2. Solvent cemented type fittings.

2.4 OUTLET, JUCTION, AND PULL BOXES

A. Cast Type Boxes:
1. Ferrous alloy box with inside threaded hubs for rigid steel conduit.
2. Aluminum box with threaded hubs for rigid aluminum conduit.
3. Ferrous alloy box with compression or inside threaded hubs with adapter for electrical metallic tubing.
4. Cast raised cover, size matched to contour of box.
5. Tapered threads for hubs.

B. Galvanized Pressed Steel Type Boxes:
1. Pressed steel, galvanized or cadmium-plated, 4-11/16 inch square by 2-1/8 inch deep minimum with extension ring as required.

C. Sheet Steel Boxes:
1. No. 12 gauge sheet steel for boxes with maximum side less than 40 inches, and maximum area not exceeding 1,000 square inches; riveted or welded 3/4-inch flanges at exterior corners.
2. No. 10 gauge sheet steel for boxes with maximum side 40 to 60 inches, and maximum area 1,000 to 1,500 square inches; riveted or welded 3/4-inch flanges at exterior corners.
3. No. 10 gauge sheet steel riveted or welded to 1-1/2 inch by 1-1/2 inch by 1/4 inch welded angle iron framework for boxes with maximum side exceeding 60 inches and more than 1,500 square inches in area.

4. Covers:
   a. Same gauge as box.
   b. Subdivided single covers so no section of cover exceeds 50 pounds.
   c. Machine bolts or machine screws threaded into tapped holes.
5. Paint:
   a. Rust-inhibiting primer, ANSI 61 gray enamel finish coat.

2.5 FLOOR BOXES AND FITTINGS

A. General:
1. Provide floor boxes and fittings of the types, ratings and configurations as shown on the Drawings.
2. Must be NRTL listed. (UL, FM, ETL, etc.)
3. Floor boxes and fittings shall be suitable for the fire rating and thickness of the floor and for the types and quantity of telecommunications cables to be installed through the device.
4. Combination power/telecom devices shall have a barrier to separate the power and telecommunications wiring.
5. Must be suitable for the installation of specified telecommunications terminations (outlet hardware) or for connection to specified flexible conduit, as applicable.
6. Confirm installation locations with the Engineer and the Structural Engineer prior to making floor penetrations.

B. Combination Recessed Flush Floor Box:
1. Refer to Specification Section 262726.

2.6 SLEEVES

A. Sleeves shall be 4-inch EMT. Extend floor sleeves a minimum of 4 inches above and below finished floor. Extend wall sleeves a minimum of 4 inches on either side of wall. Sleeve ends shall be protected with a bushing.

B. Provide sleeves between floors of telecommunication closets in quantities and locations as shown on the Drawings.

2.7 J-HOOKS AND INDIVIDUAL CABLE SUPPORTS

A. Provide a system of overhead- and wall-mounted J-Hooks, cable slings or other individual cable supports adequately secured to the structure. J-Hooks shall be galvanized steel, smooth edges suitable for supporting telecommunications cabling. Cable slings shall be of flexible construction suitable for supporting telecommunications cabling. All J-Hooks, cable slings and individual cable supports shall be approved for installation in a return-air ceiling plenum.

PART 3 - EXECUTION

3.1 GENERAL

A. Provide conduit and pull boxes for all telecommunications cabling routed outside of telecommunications closets or equipment rooms except:
1. Where accessible cable tray is installed for these cables.
2. Where the Contract Documents specifically allow cables to be routed overhead by means of “J-Hooks”, approved surface-mounted raceway/wireway, an approved flexible cable support system, or similar approved means.
3. Where the Contract Documents specifically allow the use of the “ring and string” method for installing cables to outlets in partition walls.

B. Except where other specific sizes are required by the Contract Documents, the minimum size for telecommunications conduits shall be:
1. 4 inches for backbone pathways (between the telecommunications entrance facility room and telecommunications closets).
2. 3 inches to connect telecommunications closets on the same floor of a multi-story building.
3. 1.25 inches where a conduit serves a maximum of two nearby typical outlets.
4. 1 inch where a conduit serves a single typical outlet. (voice, data, TV.)

05/03/13 PERMIT SET

5. 0.75 inch where a conduit serves a single wall-phone outlet, a single pay telephone, or a single elevator phone connection.

C. Elbows for conduit installed below grade or embedded within floor slabs shall be rigid steel conduit with two coats of corrosion-resistant paint or tape wrap.

D. Tie embedded raceways securely in place prior to concrete placement. Raceways installed below or within floor slabs shall extend a minimum of 4 inches above the finished slab or housekeeping pad to the first connector. Install capped bushings on conduit stub-ups.

E. Locate raceways so that the integrity of structural members is not affected and they do not conflict with the services of other trades. Draw up couplings and fittings full and tight. Protect threads from corrosion after installation with zinc chromate or equivalent protection.

F. Conceal raceways except at surface-mounted cabinets and freestanding equipment. Install minimum of 6 inches from flues, steam pipes, or other heated lines. Provide flashing and counter-flashing for waterproofing of raceways that penetrate the roof. Do not penetrate waterproof membranes unless proper seal is provided. Install telecommunications raceways a minimum of 24 inches from parallel power raceways; avoid long parallel runs of telecommunications and power conduits to the extent practicable. When crossing power raceways, cross at a 90-degree angle. Route exposed raceways and raceways above suspended ceiling parallel or perpendicular to building lines with right-angle turns and symmetrical bends. Provide sleeves in concrete walls, floor slabs and partitions. Waterproof sleeved raceways where required. Fire stop penetrations with UL Listed fire-rated assemblies.

G. Provide raceway expansion joints for exposed and concealed raceways at expansion joints, between structures to compensate for differential movement and where necessary to compensate for thermal expansion/contraction. Provide bonding conductor.

H. Provide raceways with appropriate seal-offs, explosion-proof fittings, etc. in special occupancy areas as required. Provide conduit seal-offs where portions of an interior raceway system pass through walls, ceilings or floors which separate adjacent rooms having substantially different maintained temperatures, refrigeration or cold storage rooms.

I. Provide pull cord in empty raceways. Tag both ends noting destination.

J. Clear raceway of all obstructions and dirt prior to pulling in wires or cables. Use ball mandrel (diameter approximate 85 percent of conduit insider diameter) followed by close-fitting wire brush and wad of felt or similar material. This assembly may be pulled with, but ahead of cable being installed. Clean empty raceways similarly. Clear or replace any raceway with rejects ball mandrel.

K. Secure raceway clamps or supports to masonry materials with toggle bolts, expansion bolts, or steel inserts. Install raceway on steel construction with approved clamps which do not depend on friction or set-screw pressure alone.

L. Raceways Embedded in Floor Slabs:
   1. Raceways shall not be installed in slab without the approval of the Structural Engineer.
   2. Raceways shall not interfere with placement of floor slab reinforcement components.
   3. Install raceways between the upper and the lower layers of reinforcing steel.
   4. Space raceways not less than 8 inches on centers except where they converge at telecommunications backboards, equipment cabinets or junction boxes.
   5. Raceways running parallel to slabs supports, such as beams, columns and structural walls, shall be installed not less than 12 inches from such supporting elements.
   6. Secure raceways in place prior to the concrete pour so that the raceways are not moved sideways or floated to the top of the slab during the placement of the concrete.

M. Non Metallic Raceway Installations:
   1. Joints shall be made using the material recommended by the raceway manufacturer. Components shall be cleaned prior to assembly.
   2. Raceway cut-offs shall be square and shall not deform conduit. Ream rough surfaces.
   3. Provide male box adapters to terminate raceways.
   4. Where separable terminations are required, provide PVC threaded adapters with locknuts or bushings. Provide “O” rings for water-tight installations.
   5. Bends shall be made by methods that do not deform or damage the conduit.

6. Provide expansion fittings where required.
7. Raceway supports shall be installed to allow the non-metallic conduit to slide through the supports.
8. Non-metallic raceway is not permitted within the building.

N. Raceways above Suspended Ceilings:
1. Single runs of 0.5-inch or 0.75-inch raceways may be supported from ceiling support wires where permitted by the rating of the ceiling system.
2. Provide independent support of raceways larger than 0.75 inches. Provide independent support of multiple raceways (more than one). Provide unistrut support and threaded rod to structure above. Attachment to ceiling support wires is not permitted.
3. Provide independent support of raceways installed above fire-rated ceilings. Attachment to ceiling support wires is not permitted.
4. Install conduit 1 foot-0 inches minimum above top of ceiling.

O. Raceways and fittings installed in hazardous (classified) locations shall conform to NEC Article 500 requirements for the associated Class and Division.

P. Provide high-impact thermoplastic insulating bushings on sleeve and raceway ends. Provide metallic capped insulating bushings on conduits larger than 2 inches.

Q. Fire-seal floor sleeves and sleeves in fire-rated walls to maintain fire rating of wall after telephone cables are installed with a UL Listed fire-step assembly.

R. Arrange raceway runs less than 100 feet from point to point so that they contain no more than two 90-degree standard factory bends or three 90-degree, 24-inch radius bends. Provide pull boxes in raceway runs exceeding 100 feet from point to point with more than one 90-degree bend. Raceway runs shall not contain Condulet® type fittings.

3.2 TRANSITIONS BETWEEN DIFFERENT TYPES OF CONDUIT

A. Provide a pull box where a transition is made from fixed raceways (RMC, IMC or EMT) to flexible conduit, UON.

3.3 OUTLET, JUNCTION AND PULL BOXES

A. Provide outlet, junction, and pull boxes as indicated and as required for a complete installation and to facilitate proper pulling of wires and cables. Boxes shall be sized per ANSI/TIA/EIA-569-B as minimum. (For single conduits trade size 1-1/4 inch, or smaller, an outlet box sized 4-11/16 inches square by 2-1/8 inches deep may be used as a pull box, UON.) Plug open knock-outs.

B. The exact location of outlets and equipment is governed by field conditions. Where necessary, relocate outlets so that fixtures and equipment are symmetrically located in accordance with the room layout and will not interfere with other work or equipment. Verify final location of outlets, fixtures, and equipment with Engineer.

C. Back-to-back outlets in the same wall, or “through-wall” type boxes, are not permitted. Provide 12-inch minimum spacing for outlets shown on opposite side of a common wall. Provide acoustical potting compound on outlet boxes installed in private offices and conference rooms.

D. Fit outlet boxes in finished ceilings or wall with appropriate covers, set flush with the finished surface. Where more than one outlet mounting device is located at one point, use multiple gang boxes and covers. Provide outlet boxes of type and size suitable for the specific application. Provide barriers where required for voltage or systems separation.
1. Provide a single gang plaster ring and a pull string to nearest accessible ceiling location.
2. Provide a stainless steel coverplate with grommeted hole for furniture system connections.

E. Pull boxes shown in the Drawings are generally a minimum requirement that assumes the conduit run shall be the length indicated and there shall be no more bends than indicated. Actual site conditions and field coordination with other trades usually result in additional bends in the conduit and sometimes cause the length of the run to be greater than shown. Therefore, install pull boxes in all telecommunications conduit runs so that the following conditions are met:
1. Install pull boxes as required in conduit runs so that the distance between pull points is less than 100 feet.

2. Install pull boxes in conduit runs so that a run of conduit does not contain more than the equivalent of two (2) 90-degree bends (180 degrees total) between pull points.
3. Install pull boxes only in straight sections of conduit, NOT in lieu of a bend.
4. Do NOT use Condulet® type fittings in runs of telecommunications conduit.

3.4 APPLICATIONS OF RACEWAYS

A. Rigid Metal Conduit or Intermediate Metal Conduit:
   1. Where exposed to physical damage.
   2. Indoors where exposed to moisture.
   3. Where required by code. (Note particularly Section 800-40, NEC.)
   4. Exposed indoor installations within 10 feet above finished floor.

B. Electrical Metallic Tubing:
   1. General purpose distribution of telecommunications cabling, except where another conduit type is specifically required.

C. Flexible Steel Conduit:
   1. Dry locations only.
   2. Connections to modular furniture.
   3. Connections to movable equipment.
   4. Raised floor access box connection in raised floor locations.
   5. Maximum length shall be 6 feet.

D. Liquid-Tight Flexible Steel Conduit:
   1. Same as flexible steel conduit in damp or wet locations.

E. Rigid Non-metallic Conduit:
   1. Below slab on grade.
   2. Embedded in floor slabs.

3.5 APPLICATION OF OUTLET, JUNCTION AND PULL BOXES

A. Cast Type Boxes:
   1. Where connected to rigid metal conduit, intermediate metal conduit and liquid-tight flexible conduit, 1-1/4 inches and smaller.
   2. Exposed conduit installations within 10 feet above finished floor.
   3. Where exposed to moisture and outdoors.

B. Galvanized Pressed Steel Type Boxes:
   1. Where connected to electrical metallic tubing and flexible steel conduit, 1-1/4 inches and smaller.
   2. Dry locations.
   3. Where concealed in walls and above suspended ceilings.
   4. The size for the typical outlet box for wall-mounted telecommunications outlets shall be 4-11/16 inches square by 2-1/8 inches deep with a two-gang plaster ring, UON.

C. Sheet Steel Boxes:
   1. Where connected to conduit larger than 1-1/4 inches.

3.6 FLOOR BOXES AND FITTINGS

A. Provide floor boxes and fittings of the types, ratings, and configurations as shown on the Drawings.

B. Confirm installation locations with the Engineer and the Structural Engineer prior to making floor penetrations.

C. Ensure that there is detailed coordination between the electrical power and telecommunications cabling installers where dual service (power and telecom) devices are to be installed.

END OF SECTION

05/03/13 PERMIT SET

SECTION 283000

FIRE MANAGEMENT SYSTEM

PART 1 - GENERAL

1.1 DESCRIPTION

A. Provide a microprocessor controlled, electrically supervised fire management system in accordance with the Contract Documents. Provide detailed system design, all equipment, tools, drawings, labor, materials, accessories, and approvals from governing agencies required to furnish, install, start up, and test a complete operating fire management system. Systems shall be provided and placed into operation in accordance with the requirements of the Authority Having Jurisdiction (AHJ).

B. The system shall include (but not be limited to) the following functions:
   1. Smoke and fire detection
   2. Sprinkler suppression system monitoring
   3. Other fire suppression system monitoring
   4. Smoke management
   5. Releasing service
   6. One-way voice communication notification system
   7. Two-way voice communication system

C. Labor, materials including conduit and wiring, and accessories not specifically called for in the Contract Documents but required to provide complete, operating, and approved systems, shall be provided within the scope of the Contract.

D. Determine, coordinate, and incorporate the design and construction requirements of the architectural, structural, fire protection and mechanical systems, and auxiliary systems including food service, fire doors and windows, elevators, and other related systems, to fully meet all code requirements.

E. The purpose of the Contract Drawings and this performance-based Specification is to convey the scope of work required, all of which the Contractor is responsible to furnish, install, adjust, and make operable.

F. The Contractor shall provide all devices and equipment required by these specifications and drawings. The intent of these specifications and drawings is to convey the general requirements and approximate device locations and quantities. A complete set of shop drawings shall be submitted, stamped and signed by the Subcontractor as the Engineer of Record for the system. Under no circumstances shall the Contractor delete any equipment without the written directive of the Owner and Engineer.

G. Fire alarm devices are indicated on plans for architectural coordination and general design intent, and do not necessarily represent the actual quantity of devices required. The Contractor is responsible for providing the quantity of devices required for complete coverage, and to meet the requirements of the codes and of the AHJ. If additional devices are required, they shall be provided and installed at no additional cost to the Owner. Provide all required conduit, wire, panels, controls, auxiliary devices, accessories, testing, etc. for a complete and functional operating system.

H. The fire management system shall be a stand-alone system operating independently of other control systems.

I. Provide dedicated 120V power to all equipment and booster panels as required, and connect to the emergency power system. See electrical drawings for emergency power panel locations. Connect to the nearest panel, unless otherwise noted on the drawings.

J. Related work specified in other divisions of these specifications:
   1. Sprinkler water flow and tamper switches.
   2. Magnetic door holders and electric door locking hardware.
   3. Installation of duct type smoke detectors.
   4. Security system.

05/03/13 PERMIT SET

5. Hardware sets.
6. Fire doors and windows.
7. Supervision and trouble status of emergency radio amplification system.

K. The Fire Management System contract is a performance-based contract. The Contractor shall develop a complete set of code-compliant and fully coordinated construction documents to the satisfaction of the Authorities Having Jurisdiction. The fire alarm system manufacturer and Contractor shall provide all required documentation, obtain all required permits and approvals, and shall provide all devices and accessories in the quantities and locations necessary for a fully functional and code-compliant system.

1.2 QUALITY ASSURANCE

A. Provide engineering design, equipment and labor to provide a complete and operating system.

B. Obtain Fire Department approval of the fire management system and installation.

C. Manufacturer and equipment supplier shall have a minimum of ten years' prior experience in the Bay Area. Equipment supplier shall have 24-hour parts and labor service available with a maximum 4-hour response time.

D. The Contractor shall have successfully installed similar fire detection, evacuation voice and visual signaling, and smoke control systems in a previous project of comparable size and complexity.

E. The Contractor shall employ NICET (minimum Level II – Fire Alarm Technology) technicians on-site to guide the final checkout and to ensure the systems integrity.

F. Contractor shall be Factory Authorized by the system manufacturer and technicians shall be Factory Certified to perform the installation work in this Section.

G. Prior to making required submittals, the Contractor shall meet with the Fire Department and make an informal presentation of the fire management system. Meeting minutes shall be issued and submitted with the submittal drawings, with comments incorporated into the required submittals.

1.3 DESIGN REQUIREMENTS

A. The fire management system submittal drawings shall be prepared under the supervision of a Professional Engineer registered in the State of California, and submitted drawings and calculations shall bear the Engineer's stamp.

B. The Contractor shall have in-house engineering and project management capability consistent with the requirements of the project. Qualified representatives of the system manufacturer shall perform the detailed engineering design of central and remote control equipment, and shall produce all panel and equipment drawings, submittals and operating manuals. The Contractor is responsible for detailed system design and documentation, coordination of system installation requirements and final system testing in accordance with these specifications.

C. Previous system architecture with spare capacity already built in within fire alarm panels for batteries and for amplifiers for an additional 20% increase to quantity of speakers, strobes, and duct smoke detectors. Contractors bid shall include the necessary components for this spare capacity, as well as a total of 5% additional speakers, strobes, and duct smoke detectors.

1.4 REFERENCE STANDARDS

The following standards and guides (latest edition except where noted) are hereby made a part of this work by reference thereto:

A. Americans with Disabilities Act (ADA)

B. Local Building and Fire Department Requirements

C. American National Standards Institute (ANSI) / American Society of Mechanical Engineers (ASME) A17.1, Safety Code for Elevators and Escalators

D. American National Standards Institute (ANSI) / American Society of Mechanical Engineers (ASME) A17.3, Elevator Code for Existing Elevators

E. International Building Code (Applicable Edition) with Local Amendments

F. California Building Code (Applicable Edition) with Local Amendments

G. NFPA 1 – Uniform Fire Code (Applicable Edition) with Local Amendments
H. NFPA 13 – Sprinkler Systems
I. NFPA 20 – Standard for the Installation of Stationary Pumps for Fire Protection
J. NFPA 70 – National Electrical Code (Applicable Edition) with Local Amendments
K. NFPA 72 – National Fire Alarm Code with Local Amendments
L. NFPA 90A – Air Conditioning and Ventilating Systems
M. NFPA 101 – Life Safety Code
N. NFPA 110 – Emergency and Standby Power Systems
O. Owner's Insurance Underwriter
P. State Fire Marshal
Q. UL Standard 33 – Releasing Devices
R. UL Standard 38 – Manual Alarm Stations
S. UL Standard 217 – Smoke Detectors – Single/Multiple Stations
T. UL Standard 228 – Door Holders – Closers
U. UL Standard 268 – Smoke Detectors for Fire Protective Signaling Systems
V. UL Standard 268A – Smoke Detectors for Duct Application
W. UL Standard 521 – Heat Detectors for Fire Protective Signaling Systems
X. UL Standard 864 – Control Units for Fire Protective Signaling Systems
Y. UL Standard 1424 – Cables for Power-Limited Fire Protective Signaling Systems
Z. UL Standards 464 and 1480 – Audible Devices, Speakers for Fire Protective Signaling Systems
AA. UL Standard 1481 – Power Supplies for Fire Protective Signaling Systems
BB. UL Standard 1711 – Amplifiers for Fire Protective Signaling Systems
CC. UL Standard 1971 – Visual Signaling Appliances

1.5 ABBREVIATIONS

A. ADA Americans with Disabilities Act
B. AHJ Authority Having Jurisdiction
C. ECC Engineer's Control Center
D. FACP Fire Alarm Control Panel
E. FARA Fire Alarm Remote Annunciator
F. FARP Fire Alarm Remote Panel
G. FATC Fire Alarm Terminal Cabinet
H. FCC Fire Control Center
I. FCIP Firefighter's Control and Indicating Panel
J. FTS Firefighter's Telephone System
K. NFPA National Fire Protection Association
L. SCC Security Control Center
M. UL Underwriters Laboratories Inc.
N. VCS Voice Communication System

1.6 SUBMITTALS

A. Minutes of fire management system Contractor's meeting with Fire Department.
B. Manufacturer's product data sheets for equipment including State Fire Marshal listing numbers.
C. Floor plans (minimum 1/8-inch scale) with room names and numbers, showing device locations and interconnecting conduit and wire. Include location of fire/smoke barrier walls.

D. Floor plan (minimum 1/2-inch scale) of the FCC indicating fire management system equipment, equipment furnished by others (including generator and fire pump annunciators), tables, plan racks, and required clearances. Elevations (minimum 1/2-inch scale) of each wall of the FCC.

E. Drawings shall show proposed layout and anchorage of equipment and appurtenances and equipment relationship to other parts of the work, including clearances for maintenance and operation.

F. Riser diagram showing devices, equipment, and interconnecting conduit and wire.

G. Scaled detail drawings of FACP, FARA, FARPs, FCIP, FTS, and VCS panel fronts.

H. Wiring diagram for each device. Include connection details to auxiliary equipment.

I. Control and wiring diagrams for smoke control sequences.

J. Complete narrative of the sequence of operation.

K. Sequence of operation matrix table including a complete line-by-line listing of fire alarm initiating devices, corresponding device address, and input/output matrix.

L. Voltage drop calculations.

M. Battery sizing calculations.

N. VCS amplification sizing calculations.

O. Visual alarm power supply sizing calculations.

P. Power supply calculations for magnetic door holders, and electric door locking hardware.

Q. Wire identification schedule.

R. Seismic restraint calculations.

S. All drawings must be stamped and signed for approval by the Fire Marshal.

1.7 FIELD TESTING

A. All testing must be in accordance with current NFPA 72 standards and requirements. Refer to PART 3 for additional testing requirements.

B. Wiring shall be inspected and tested for continuity and short circuits.

C. Field Test Reports shall include at minimum the following:
   1. Certification that equipment has been properly installed and is in satisfactory operating condition.
   2. Sensitivity settings for smoke detectors.
   3. Detailed operational test report in matrix form indicating each initiating device, each signaling device, each communication device, and each control and indicating light on each piece of equipment. Report shall certify the following:
      a. Successful operation of each alarm and supervisory initiating device.
      b. Successful operation of each signaling device.
      c. Successful operation of automatic smoke control sequences.
      d. Successful operation of FACP.
      e. Successful operation of FARA.
      f. Successful operation of FARPs.
      g. Successful operation of FCIP.
      h. Successful operation of FTS.
      i. Successful operation of VCS.
      j. Successful operation of elevator recall sequence.
      k. Successful operation of kitchen hood exhaust equipment connections.
      l. Successful operation of line supervision devices.
      m. Successful operation of off-site alarm monitoring system connection.
      n. Successful release of electric door locking hardware and magnetic door holders.

1.8 IDENTIFICATION

A. Provide an identification nameplate for each equipment cabinet. Nameplates shall correspond with labeling identified in the submittal drawings.

05/03/13 PERMIT SET

B. Fire alarm conduit shall be painted red. As an alternate, conduit shall be permanently labeled “FIRE ALARM” every 30 feet.

C. Fire alarm junction boxes shall be painted red.

D. All field initiating and indicating devices shall be labeled with self-adhesive tape with black lettering and identification labeling according to circuit loop and device address/number.

E. Color code all wiring per recommended standards. Tag all wires in terminal cabinets with tie wrap tags with inked identification.

1.9 SEQUENCE OF OPERATION

A. The system shall operate automatically in accordance with the following table:

05/03/13 PERMIT SET

FIRE MANAGEMENT SYSTEM SEQUENCE OF OPERATION				
	Manual Pull Station	Area Smoke Detector	Sprinkler Water Flow Switch	Sprinkler Tamper Switch
Annunciate Alarm at FACP and FARP	Yes	Yes	Yes	No
Annunciate Supervisory at FACP and FARP	No	No	No	Yes
Annunciate Circuit Supervision (Trouble) at FACP and FARP	Yes	Yes	Yes	Yes
Activate selected audible and visual signaling device zones	Yes	Yes	Yes	No
Release Magnetic Door Holders	Yes	Yes	Yes	No
Release Electric Door Locking Hardware	Yes	Yes	Yes	No
Transmit Off Site Signal	Yes	Yes	Yes	Yes

B. The VCS shall automatically activate the audible and visual signaling devices in accordance with the Fire Department requirements.

C. Air Handling Systems:
   1. Activation of a supply or return air duct detector shall shut down the associated fan or air handling system.
   2. In the event of an alarm, all components of air handling systems with a total capacity of 2,000 CFM or greater within that zone shall be automatically shut down.

D. Combination Fire/Smoke Dampers:
   1. Activation of a duct detector or area smoke detector at a combination fire/smoke damper shall close the associated fire/smoke damper.

1.10 SYSTEM ZONING

A. Alarm Initiating Devices:
   1. Provide a separate, individual zone for each manual pull station, area smoke detector, duct smoke detector, area heat detector, and sprinkler water flow switch.

B. Supervisory Initiating Devices:
   1. Provide a separate, individual zone for each sprinkler tamper switch.

C. Post Indicator Valve:
   1. System alarm (1 zone per system).
   2. System trouble (1 zone per system).

D. Fire Speakers and Visual Alarm Strobes:
   1. Each floor of the building (above and below grade) shall be a separate, individual zone.
   2. Each exterior area shall be a separate individual zone.

E. Initiating and signaling device wiring circuits/loops/channels shall be loaded to no more than 75 percent capacity to allow for the installation of future devices.

PART 2 - PRODUCTS

2.1 ACCEPTABLE MANUFACTURERS

A. Fire management system components shall be of the same manufacturer.

B. Acceptable manufacturers: Siemens, GE EST, Honeywell Notifier, or Simplex.

C. Products for this project shall be of the latest design. Obsolete or discontinued models are not acceptable.

2.2 SYSTEM TYPE

A. The FACP and FARP's shall be connected in a network configuration to become components for a distributed intelligence system. Each FARP shall be capable of performing individual supervision and control on its locally connected devices and shall have the ability to inform the FACP and other FARP's of point status and panel condition.

B. The fire management system shall be the fully addressable type. Each fire alarm initiating device shall be a separate, individual zone. Provide interface modules to connect non-addressable devices to addressable wiring channels.

C. The system shall support a single stand-alone node or can be combined for up to sixty four (64) nodes communicating on a peer-to-peer multi-priority token ring communication network. Loop alarm recognition must be within 750 milliseconds and network alarm response must be under three (3) seconds of a device reporting an alarm state.

D. All zoning/device location information shall be field-programmable to meet the exact job requirements as required by the Fire Department and Fire Marshal.

E. Siemens XLSV, EST 3, Honewell Notifier NFS2-3030, or Simplex 4100U, connected through a token ring network or equal.

05/03/13 PERMIT SET

2.3 LINE SUPERVISION

A. All system equipment and wiring shall be supervised in compliance with the requirements of NFPA 72.

B. The system must be capable of being wired in a Class A or Class B with non-shielded wire. Disruption or failures of communication between devices and the data controller, or loss of a bus connection, shall result in a signal to the network to identify the alarm condition.

C. Unless otherwise required by the AHJ, wiring classification shall be as follows:
   1. FACP, FARP, and FATC communications wiring: Class A.
   2. Initiating device circuits: Class B.
   3. Notification device circuits: Class B.

D. Where designated for Class A wiring, Class A circuits shall be installed such that the outgoing and return conductors, exiting from and returning to the control unit, respectively, are routed separately. The outgoing and return (redundant) circuit conductors shall not be run in the same cable assembly (multi-conductor cable), enclosure, or raceway.

E. Wiring for initiating and notification circuits must allow the addition of T-taps for Class B wiring.

F. Notification appliance circuits and any other circuits necessary for the operation of the notification appliance circuits shall be protected from the point at which they exit the control unit until the point that they enter the notification zone that they serve using a 2-hour rated cable assembly.

2.4 STANDBY BATTERIES

A. Provide sufficient battery capacity to operate the entire system upon loss of power as required by NFPA 72. The on-site emergency power system shall not be used when sizing the battery supply.

B. The system shall automatically transfer to the standby batteries upon power failure. Battery charging and recharging shall be automatic.

2.5 FIRE ALARM CONTROL PANEL (FACP)

A. Solid state, microprocessor based, modular design, fully supervised. Steel enclosure in standard finish, with hinged, locking door. Integral network interface modules, power supply, standby batteries, and battery charger. Wall mount in FCC.

B. Provide power on LED, power failure LED, system trouble LED, system reset switch, alarm silence switch, trouble silence switch, manual evacuations switch, alarm acknowledge switch, trouble acknowledge switch, supervisory service acknowledge switch, lamp test button, tone alert, battery supervision LED, auxiliary relays, and other system indicators and controls necessary for processing alarm and signaling functions. Indicating lamps shall be LED type.

C. Provide appropriate permanent identification labeling of control and indicating functions.

D. Annunciation:
   1. Serial annunciator with back lit, alphanumeric, 168-character liquid crystal display indicating clear language information as to the type of alarm (device type), point status (alarm or trouble), number of alarms on the system, and a custom location label. Ability to scroll back through prior system actions, with events automatically placed in easy to access queues for viewing specific event types separately.
   2. LED matrix annunciator indicating initiating device type (columns) and floor of initiating device (rows). Provide a separate row for each floor level and a separate column for each device type (manual pull station, area smoke detector, duct smoke detector, sprinkler water flow, and sprinkler valve tamper). Labeling shall be modifiable to customize the designation of all LED's and switches. Provide a red (alarm or trouble) and yellow (zone supervision) light for each annunciation zone. Provide matrix layout, identification, and zoning requirements that meet the requirements of the Fire Department.
   3. Include RS 232 port for printer connection.
   4. Stand-alone workstation computer complete with software and hardware for user interface.
   5. Provide a permanent binder with typewritten, laminated inserts cross-referencing location labels to the description and location of system address.

E. System shall utilize analog type smoke detection with alarm verification, self-test feature, individual sensor automatic timed sensitivity adjustment, individual smoke sensor field adjustable sensitivity set from FACP, and automatic maintenance alarm feature.

F. GE EST 2, or equal.

2.6 FIRE ALARM REMOTE PANELS (FARP)

A. FARP's shall be independent fire alarm systems for distributed processing and special purpose applications. Provide FARP's for distributed processing of fire management system functions.

B. Solid state, microprocessor based, modular design, fully supervised. Steel enclosure in standard finish, with hinged, locking door. Integral power supply, standby batteries, and battery charger.

C. Provide power on LED, power failure LED, system trouble LED, system reset switch, alarm silence switch, trouble silence switch, alarm acknowledge switch, trouble acknowledge switch, supervisory service acknowledge switch, lamp test button, tone alert, battery supervision LED, auxiliary relays, and other system indicators and controls necessary for processing alarm and signaling functions. Indicating lamps shall be LED type.

D. Provide appropriate permanent identification labeling of control and indicating functions.

E. LED annunciation of alarm and supervisory zones. Provide a red (alarm or trouble) and yellow (zone supervision) light for each annunciation zone.

F. Siemens Firefinder XLSV through an X-Net network, EST3 connected through an EST3 network, Simplex 4100U connected through a Simplex 4120 network, or equal.

2.7 FIRE ALARM TERMINAL CABINETS (FATC)

A. Steel enclosure in standard finish, hinged locking door, fire-retardant plywood backboard, and coded terminal blocks.

B. Provide appropriate permanent identification labeling of control and indicating functions.

2.8 PRINTER

A. Provide a high impact tabletop laser printer in the Fire Command Center.
   1. Siemens, PAL-1, EST PT series, Simplex 4190-9013, or equal.

2.9 FIRE ALARM INITIATING DEVICES

A. General:
   1. Addressable type.
   2. Provide auxiliary relays where required to satisfy system operational requirements.
   3. Smoke detectors shall be analog type.

B. Manual Pull Stations:
   1. High impact Lexan polycarbonate or die cast metal.
   2. Push type, double action, mechanically latched upon operation until key-operated manual reset. Pull station front shall be hinged to back plate assembly, requiring keyed opening to reset.
   3. Provide protective shields for manual pull stations located in public areas. Tamper-proof, clear Lexan shield, with warning horn and integral 9-volt battery.
   4. Siemens HMS_D, or equal.

C. Area Smoke and Heat Detectors:
   1. General:
      a. Common base for detachable detector heads.
      b. Intelligent detectors with integral microprocessor, non-volatile memory, automatic device mapping, electronic addressing, environmental compensation and red/green status LED's.
      c. Provide relay bases where required for detectors with local device/accessory interface.
   2. Photoelectric thermal type area smoke detector:
      a. Smoke and heat alarm filtering and validation.
      b. Thermal sensor.
      c. Siemens HFP-11 with DB-11 base, or equal.

3. Photoelectric type area smoke detector:
   a. Smoke sensing and digital filtering for alarm validation.
   b. Adjustable sensitivity.
   c. Siemens HFP-11 with DB-11 base, or equal.
4. Area heat detector:
   a. 135-degrees fixed temperature self-restoring type.
   b. Siemens HFPT-11 with DB-11 base, or equal.

D. Remote alarm indicator:
1. Ceiling mounted, red LED, stainless steel faceplate engraved ALARM. Provide where area detectors or duct type smoke detectors are installed above a ceiling.
2. Siemens TSM-1, or equal.

E. Addressable Transmitters/Monitor Modules:
1. Addressable transmitters/monitor modules shall be provided where required to interface with contact alarm devices.
2. Siemens HTRI-D/S, or equal.

F. Addressable Relay Modules:
1. Addressable relay modules shall be provided where required to provide audible alarm interface and/or relay control interface.
2. Siemens HTRI-R, or equal.

2.10 VOICE COMMUNICATION SYSTEM (VCS)

A. One-way voice paging and fire alarm evacuation signal between the FCC and alarm signaling devices. Provide a distributed amplification system integrated into the FACP and FARP's. Multi-channel type to permit simultaneous paging to selected speaker zones while fire alarm evacuation signal is being transmitted to other speaker zones. Amplifiers and visual alarm power supplies shall be sized to support full coverage of all areas of the building plus 75 percent spare. Provide additional space in each cabinet for a minimum of 20 percent modular expansion of amplification capacity.

B. Selective zone paging to all or any combination of speaker zones. Automatic or manual selection of speaker zones shall activate a red LED for the activated speaker zones.

C. Fire tone LED shall indicate fire alarm evacuation signal is being transmitted.

D. Fire tone switch shall initiate the fire alarm evacuation signal.

E. Silence LED shall indicate alarm evacuation signal has been silenced.

F. Silence switch shall silence the fire alarm evacuation signal. Time delay to self-restore to current system condition.

G. Each speaker zone shall have a manual selection switch, red LED to indicate active zone, and yellow LED to indicate speaker zone trouble.

H. ALL-CALL switch shall activate all speaker zones.

I. Acknowledge switch, system trouble, reset, and lamp test switch.

J. Hand-held microphone with push-to-talk switch for voice paging. The microphone shall have priority over pre-recorded messages and the fire alarm evacuation signal. The microphone shall be noise canceling type with frequency response of 200 to 4000 Hz.

K. Provide a remote paging handset in panel faceplate ready for console mounting.

L. The fire alarm evacuation signal shall be an alarm tone or pre-recorded message as required by the Fire Department. Failure of the primary tone generator shall result in a trouble signal and automatic switchover to a backup tone generator.

M. Pre-amplifiers shall be solid state type, arranged in modular units so that failure of a primary pre-amplifier unit shall result in a trouble signal and automatic switchover to a backup pre-amplifier unit.

N. Amplifier modules shall be supervised such that a loss or reduction of signal shall result in a trouble condition. Amplifiers shall be rated for continuous maximum power output for 24 hours minimum. System frequency response shall be plus or minus 3 dB from 100 Hz to 6 kHz.

O. Amplifiers shall be solid state type, arranged in modular units so that failure of a primary amplifier shall result in a trouble signal and automatic switchover to a backup amplifier unit.

P. Visual alarm strobes shall be synchronized throughout the building. The candela rating of visual alarm strobes shall be in accordance with NFPA 72 requirements. Provide visual alarm strobes in addition to those shown on the Drawings to meet NFPA 72 requirements.

Q. Signaling Devices:
   1. Speakers:
      a. Flush ceiling- or wall-mounted as shown on the Drawings, 4-inch cone, perforated faceplate in baked white enamel finish, fire retardant, moisture resistant, frequency response 400 Hz to 4000 Hz, taps at 1/4, 1/2, 1 and 2 watts, UL 1480.
      b. Ceiling mounted: Siemens SEF-CW, or equal.
      c. Wall mounted: Siemens SEF-W, or equal.
   2. Visual Alarms:
      a. Flush wall-mounted, high intensity strobe, vertical orientation with vertical engravement FIRE, white faceplate, ADA, UL 464.
      b. Wall mounted: Siemens ZR-MC-W, or equal.
   3. Combination Speaker/Visual Alarm:
      a. Flush mounted with 4-inch cone speaker, perforated faceplate in baked white enamel finish, fire retardant, moisture resistant, frequency response 400 Hz to 4000 Hz, taps at 1/4, 1/2, 1, and 2 watts, UL 1480. High intensity strobe, vertical orientation with vertical engravement FIRE, ADA, UL 464.
      b. Siemens SEF-MC-W, or equal.
      c. Ceiling Mounted: White housing with red “FIRE” letters, low profile, varying candela and wattage ratings.

R. For exterior locations, covered and open parking garages and other locations where ambient conditions are not suitable for proper operation of notification appliances, provide weather-proof devices with appropriate back boxes.

S. Strobes may be combined with speakers where shown on the Drawings.

PART 3 - EXECUTION

3.1 GENERAL

A. All equipment shall be installed and connected in accordance with the manufacturer’s recommendations.

B. Wiring shall be color coded, and in accordance with the manufacturer’s recommendations, NEC, and Fire Department requirements. Install wiring in an independent, dedicated metallic raceway system.

C. Connections to devices installed in accessible tile ceilings shall be in flexible conduit. Device back boxes shall be securely attached to framing members.

D. Provide appropriately sized back boxes for surface-mounted fire alarm signaling devices, paint to match device faceplate color. Stacked or punch pressed steel type back boxes are not permitted.

E. Provide water-tight type back boxes where installed recessed flush in perimeter walls below grade.

F. Provide wireways above and/or below equipment cabinets to accommodate large concentrations of wiring. Conductors within equipment cabinets shall be carefully formed and harnessed.

G. Provide power supply wiring to electric damper actuators used for smoke control that are not controlled by the temperature control system.

H. Area and duct-type smoke detectors shall be photoelectric type, unless otherwise specified or shown on the Drawings.

I. Provide a 1-inch empty conduit from the FACP to the nearest telecom terminal backboard. Connect the fire alarm control panel communications modem to dedicated telephone lines per the requirements of the AHJ.

J. Provide a 1-inch empty conduit from the FACP to the security system control panel.

05/03/13 PERMIT SET

K. Provide a signal to the lighting control system to override lighting to full brightness upon activation of fire alarm.

L. Auxiliary relays connected to the fire management system used to initiate control of monitor status of fire safety functions shall be located within 3 feet of the controlled circuit or device. The wiring between the fire management system and the auxiliary relay shall be supervised.

M. Provide additional alarm and annunciation devices as required by the AHJ within the spare device allowances noted. Include conduit, wire and testing as part of this scope of work.

N. All magnetic hold-open doors shown on the architectural drawings shall be provided with a 120V, 1-phase circuit and a dedicated smoke detector.

O. All combination fire/smoke detectors shown on the mechanical drawings shall be provided with a 120V, 1-phase circuit and a duct smoke detector.

3.2 DEVICE MOUNTING

A. Unless otherwise noted on the Drawings, plans, specifications, manufacturer's recommendations, or by the AHJ, the recommended mounting heights and requirements are as follows:

1. Control Panel:
   a. Fire Alarm control panel and remote panels and their components shall be mounted so that no part of the enclosing cabinet is less than 12 inches or more than 78 inches above the finished floor. All manually operable controls shall be at least three feet and less than five feet above the finished floor. Panel shall be installed to comply with the requirements of UL 864. The LCD display for the control panel shall be mounted at centerline 5 feet-6 inches above the finished floor.
2. Detectors:
   a. Detectors shall be mounted on the ceiling not less than 4 inches [100 millimeters] from the side wall to the near edge, or if side wall, between 4 inches [100 millimeters] and 12 inches [300 millimeters] down from the ceiling to the top of the detector.
   b. Smoke detectors shall be located at least three feet from supply or return air diffusers.
   c. Smoke detectors shall be located on either side within five feet from any opening with a magnetic door holder or a motorized coiling door within a fire-rated partition unless specifically accepted by NFPA 72 or the AHJ.
   d. Smoke detector shall be mounted at the highest point on the ceiling.
   e. Provide area or duct smoke detectors as required for activation of all fire/smoke dampers.
   f. Residential smoke detectors shall be provided in each sleeping area and in common space directly outside of each sleeping area.
3. Visual Signal Appliances (Non-Sleeping Areas):
   a. Visual signal appliances shall be wall-mounted at 80 inches [2030 millimeters] above the finished floor or 6 inches [152 millimeters] below the ceiling, whichever is lower. For purposes of installation, the bottom of the visual portion or lens of the fixture shall be used for mounting reference.
   b. Visual signal appliances may be installed on the ceiling, but must be listed for ceiling mount. Ceiling-mounted appliances shall be in accordance with the requirements of NFPA 72.
4. Visual Signal Appliances (Sleeping Areas):
   a. Visual signal appliances in accessible sleeping rooms shall be wall-mounted no less than 24 inches below the ceiling to the top of the lens and shall be in accordance with NFPA 72. The visual appliance shall be no more than 16 feet from the pillow. Minimum candela rating shall be 110 cd.
5. Audible Signal Appliances:
   a. Where ceiling heights permit, wall-mounted appliances shall have their tops at 90 inches [2300 millimeters] above the finished floor or 6 inches [152 millimeters] below the ceiling.
6. Combination Audible and Visual Signal Appliances:
   a. The location of audible/visual signal appliances shall comply with visual signal appliance mounting requirements.

05/03/13 PERMIT SET

b. Ceiling-mounted appliances shall be in accordance with the requirements of NFPA 72.

7. End of Line (EOL) Resistors shall be mounted in accessible areas. Mounting of EOL resistors in hotel guest rooms or in tenant spaces not accessible to the landlord shall not be allowed.
8. Duct-mounted smoke detectors shall be provided where indicated on the supply and return side of all air-handling units with system CFM rating equal or greater than 2000 CFM.
9. Only designated speakers, strobes, and telephones shall be surface-mounted. All surface-mounted devices shall be smooth sided, without knockouts and painted red. Use of standard electrical boxes for surface-mounted equipment is prohibited.
10. Point-addressable monitor modules and control modules shall be securely mounted in back boxes or mounted on rails within a larger enclosure. The use of wire nuts to make connections to these modules is strictly prohibited.
11. All panels visible to the public or noted on the Drawings shall be finished as directed by the Engineer.

B. Device Spacing:
1. Corridor speakers shall be spaced not greater than [**40**] [**60**] feet on center. All other speakers whether combined with strobes or not shall be spaced as shown on the Drawings.
2. Corridor strobes shall be spaced not greater than 100 feet on center and no more than 15 feet from each end of the corridor in accordance with NFPA 72.
3. Spot type smoke detectors installed in rooms shall be spaced not greater than 15 feet from a wall and not greater than 30 feet on center. Corridor smoke detectors spacing shall be no greater than that shown in NFPA 72.
4. Beam detectors shall be spaced in accordance with manufacturer's installation instructions.
5. Provide one heat detector within 2'-0" of each sprinkler head in all elevator machine rooms.

C. Lightning Arrestors:
1. Provide lightning over-voltage protectors on any circuit that contains devices or appliances located on the exterior of the building.
2. The over-voltage protectors shall mount in dedicated metallic electrical boxes as close as possible to the location where the circuits exit the building.

3.3 TEST/FIELD QUALITY CONTROL

A. A complete system pre-test shall be performed by the installing contractors before the final system acceptance test. All deficiencies shall be corrected. Upon successful completion of the pre-test, a complete pre-test report shall be submitted to the Owner's Representative to document that the fire alarm system is operating properly, along with an NFPA 72, Fire Alarm System Record of Completion document. These documents shall be received before scheduling a final test with the fire department representative or designated testing AHJ.

B. The final alarm acceptance test shall be coordinated with the Owner's Representative, and the local Fire Department representative or testing authority. A letter certifying that the installation is complete and fully operational shall be forwarded to the Owner's Representative.

C. Before final acceptance of the project can be made, the Contractor must submit from NFPA 72, the Fire Alarm System Record of Completion, signed by a factory-certified technician, certifying that the fire alarm system has been installed, tested and will function in accordance with the manufacturer's specifications and the Fire Marshal requirements. The installing contractor shall also issue a letter to the Owner's Representative indicating the fire alarm system has been installed and tested to operate according to the design drawings and specifications.

END OF SECTION

05/03/13 PERMIT SET

DIST.	COUNTY	ROUTE	POST MILES TOTAL PROJECT	SHEET N0.	TOTAL SHEETS
04	Ala	80	2.0	1204bt	1204

REGISTERED ARCHITECT — 05/03/13 DATE

05/03/13
PLANS APPROVAL DATE

LICENSED ARCHITECT — GREGORY P. BAKER — C-16884 — 10.31.2013 RENEWAL DATE — STATE OF CALIFORNIA

The State of California or its officers or agents shall not be responsible for the accuracy or completeness of electronic copies of this plan sheet.

HNTB CORPORATION
1111 BROADWAY
9TH FLOOR
OAKLAND, CA 94607

HNTB Corporation
Engineers Architects Planners

Caltrans now has a web site! To get to the web site, go to http://www/dot.ca.gov

IERBYS TEMPORARY IMPROVEMENTS

Interurban Electric Railway Bridge Yard Shop

SITE PACKAGE

VICINITY PLAN

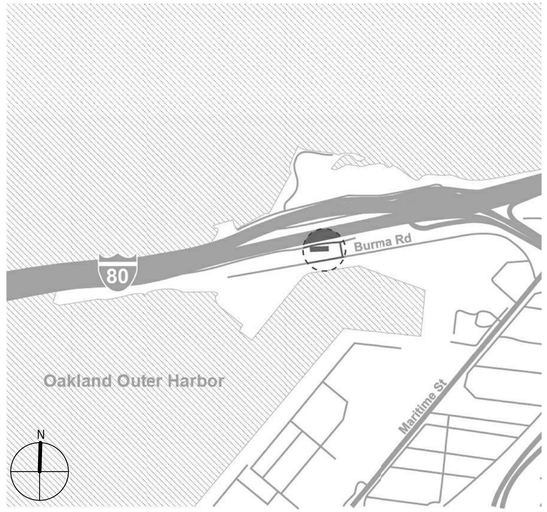

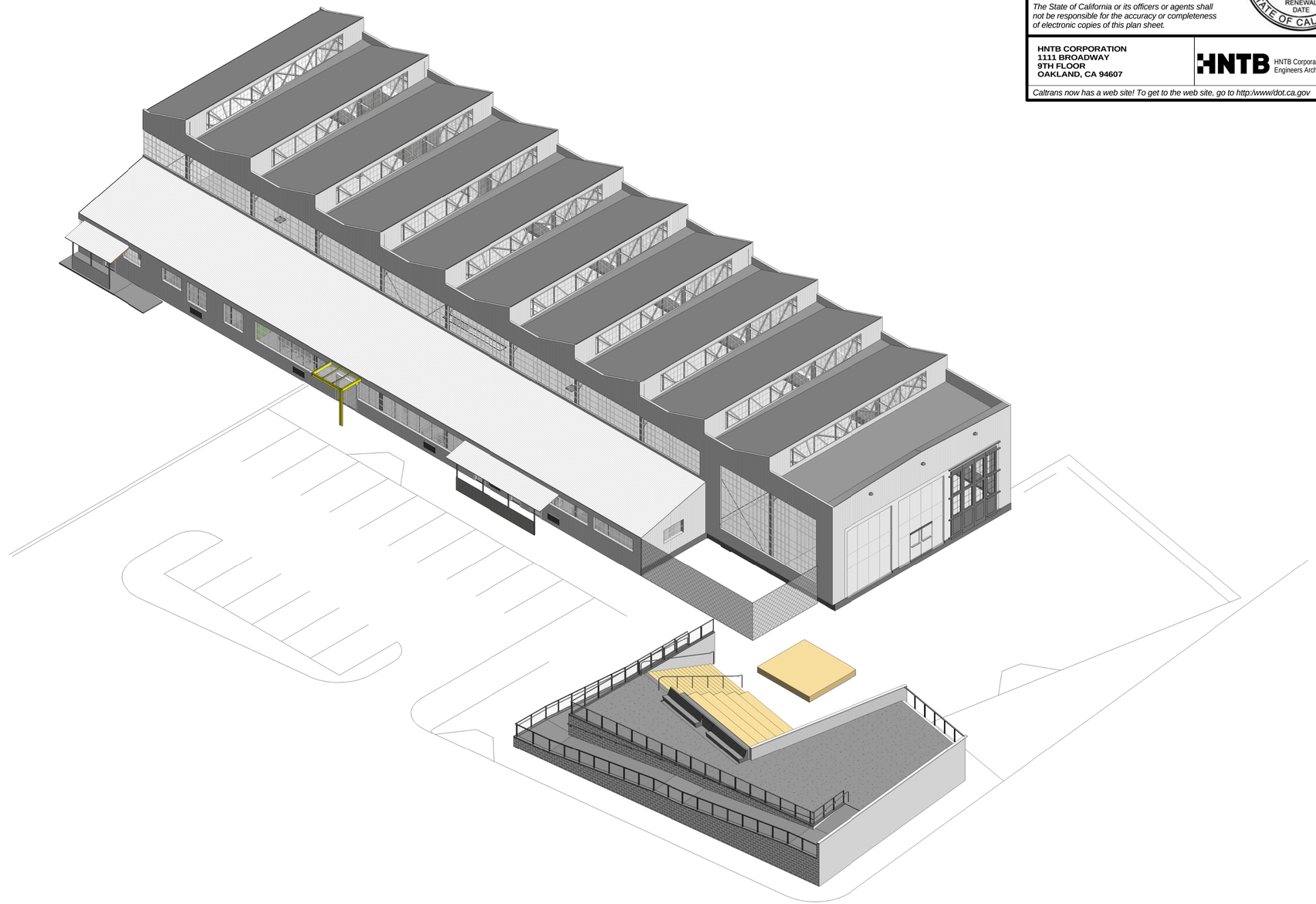

05/03/13 PERMIT SET

Sheet Number	Sheet Name	Outdoor Package
01 - General		
G000-O	COVER SHEET - SITE PACKAGE	X
G001-O	PROJECT INFO - SITE PACKAGE	X
03-Civil		
L-1	LAYOUT	X
C-1	DEMOLITION PLAN	X
C-2	CURB AND PAVEMENT ELEVATION	X
C-3	CONSTRUCTION DETAILS	X
U-1	UTILITY PLAN	X
PD-1	PAVEMENT DELINEATION	X
04 - Landscape		
LD-1	LANDSCAPE LAYOUT PLAN	X
LD-2	PLAZA LAYOUT PLAN	X
LD-3	LANDSCAPE DETAILS	X
LD-4	LANDSCAPE DETAILS	X
LD-5	LANDSCAPE DETAILS	X
05 - Architectural		
A250	RAISED TERRACE - PLAN	X
A350	RAISED TERRACE ELEVATIONS	X
A351	RAISED TERRACE PARTIAL ELEVATIONS	X
A450	RAISED TERRACE SECTIONS	X
A650	RAISED TERRACE DETAILS	X
A651	RAISED TERRACE DETAILS	X
A655	LIGHT POLE BASE	X
05 - Structural		
S001	STRUCTURAL GENERAL NOTES	X
S002	TYPICAL DETAILS NO. 1	X
S003	TYPICAL DETAILS NO. 2	X
S004	TERRACE FOUNDATION PLAN	X
S005	TERRACE FLOOR PLAN	X
S006	WALL ELEVATIONS 1	X
S007	WALL ELEVATIONS 2	X
S008	WALL ELEVATIONS 3	X
S101	SECTIONS AND DETAILS 1	X
S102	SECTIONS AND DETAILS 2	X
S103	SECTIONS AND DETAILS 3	X
S104	SECTIONS AND DETAILS 4	X
S105	SECTIONS AND DETAILS 5	X
S106	DRAINAGE DETAILS	X
S107	LIFT STATION COVER DETAILS	X
S108	LIGHT POLE FOUNDATION DETAILS	X
S109	LARGE CABLE SPOOL FOUNDATION	X
07 - Electrical		
E100	ELECTRICAL SITE PLAN	X

Grand total: 38

SAN FRANCISCO OAKLAND BAY BRIDGE
EAST SPAN SEISMIC SAFETY PROJECT

QUINCY WONG
DESIGN OVERSIGHT
05/03/13
SIGN OFF DATE

	BY	CHECKED
DESIGN	COREY SCHURR	GREGORY BAKER
DETAILS		
QUANTITIES		

PREPARED FOR THE
STATE OF CALIFORNIA
DEPARTMENT OF TRANSPORTATION

KAREN Y. WANG
PROJECT ENGINEER

BRIDGE NO.
POST MILE 2.0

IERBYS TEMPORARY IMPROVEMENTS - SITE
COVER SHEET - SITE PACKAGE
G000-O

DESIGN GENERAL PLAN SHEET (ENGLISH) (REV. 06-01-09)

ORIGINAL SCALE IN INCHES FOR REDUCED PLANS 0 1 2 3

UNIT: 04
PROJECT NUMBER AND PHASE:
CONTRACT NO.: 0120F4

DISREGARD PRINTS BEARING EARLIER REVISION DATES

REVISION DATES

SHEET 01 OF 38

C:\Users\cschurr\Documents\56185_Gateway Park - Central_cschurr.rvt

5/2/2013 2:31:03 PM

DIST.	COUNTY	ROUTE	POST MILES TOTAL PROJECT	SHEET N0.	TOTAL SHEETS
04	Ala	80	2.0	1204bu	1204

REGISTERED ARCHITECT — DATE 05/03/13

PLANS APPROVAL DATE 05/03/13

LICENSED ARCHITECT — GREGORY P. BAKER — C-16884 — RENEWAL DATE 10.31.2013 — STATE OF CALIFORNIA

The State of California or its officers or agents shall not be responsible for the accuracy or completeness of electronic copies of this plan sheet.

HNTB CORPORATION
1111 BROADWAY
9TH FLOOR
OAKLAND, CA 94607

HNTB Corporation Engineers Architects Planners

Caltrans now has a web site! To get to the web site, go to http:/www/dot.ca.gov

PROJECT INFORMATION

APPLICABLE CODES:	2010 CALIFORNIA BUILDING CODE (CBC) 2010 CALIFORNIA MECHANICAL CODE 2010 CALIFORNIA PLUMBING CODE 2010 CALIFORNIA ELECTRICAL CODE 2010 CALIFORNIA GREEN BUILDING STANDARDS CODE 2010 CALIFORNIA ENERGY CODE 2010 CALIFORNIA FIRE CODE (CFC) 2010 AMERICANS WITH DISABILITIES ACT NFPA 13 (FIRE SPRINKLERS, FIRE PUMPS, FIRE SERVICE MAINS)
OCCUPANCY CLASSIFICATION:	THE BUILDING IS A WAREHOUSE THAT HAS BEEN CONVERTED TO ACCOMODATE MIXED PRIMARY USE GROUPS INCLUDING: - ADMINISTRATIVE (GROUP B) - ASSEMBLY (ACCESSORY TO GROUP B IN ACCORDANCE W/ CBC SECTION 508.2), & - STORAGE (GROUPS S-1 & S-2).
TYPF OF CONSTRUCTION:	TYPE III-B CONSTRUCTION WITH NONCOMBUSTIBLE EXTERIOR WALLS AND COMBUSTIBLE ROOF CONSTRUCTION.
BUILDING HEIGHT:	1 STORY - 27'-0"
BUILDING AREA:	RENOVATED AREA 15,630 SF TOTAL BUILDING AREA 23,640 SF
ALLOWABLE HEIGHT: 55'-0"	FULLY SPRINKLERED

PROJECT DIRECTORY

CLIENT

CALTRANS

Ken Terpstra, Project Manager
ken_terpstra@dot.ca.gov

Project Manager

Karen Wang
Direct: (510) 301- 8926
kwang@hntb.com

ARCHITECT

HNTB Architecture
601 W. 5th St. Suite 1000
Los Angeles, CA 90071
Main: (213)403-1000

Gregory Baker
gpbaker@hntb.com

Fernando Vazquez
fvazquez@hntb.com

CONSULTANTS

STRUCTURAL

Forell/Elsesser
160 Pine St.
San Francisco, CA 94111
Main: (415)837-0700/3015
Fax: (415)837-0800

Rene Vegnos, Principal
rvignos@forell.com

Chris Petteys, Senior Associate
c.petteys@forell.com

LANDSCAPE

HNTB San Jose
1735 Technology Drive, Suite 650
San Jose, CA 95110

Stuart Bussian
Main: (510)587-8741
sbussian@hntb.com

CIVIL

HNTB Oakland
1111 Broadway, 9th Floor
Oakland, CA 94607

John Mountin
jmountin@hntb.com

MEP

Flack + Kurtz
405 Howard St. Suite 500
San Francisco, CA 94105
Main: (415)398-3833

Andrew Harrington, Project Manager
Direct: (415)402-5836
andrew.harrington@wspfk.com

LIGHTING

Horton Lees Brogden
8580 Washington Boulevard
Culver City, CA 90232
Main: (310)837-0929

Tina Aghassian, Project Manager
Main: (310)837-0929 x319
taghassian@hlblighting.com

05/03/13 PERMIT SET

N

SAN FRANCISCO OAKLAND BAY BRIDGE
EAST SPAN SEISMIC SAFETY PROJECT

IERBYS TEMPORARY IMPROVEMENTS - SITE

PROJECT INFO - SITE PACKAGE — **G001-O**

QUINCY WONG
DESIGN OVERSIGHT
05/03/13
SIGN OFF DATE

	BY	CHECKED
DESIGN	COREY SCHURR	GREGORY BAKER
DETAILS		
QUANTITIES		

PREPARED FOR THE STATE OF CALIFORNIA DEPARTMENT OF TRANSPORTATION

KAREN Y. WANG
PROJECT ENGINEER

BRIDGE NO.
POST MILE 2.0

DESIGN GENERAL PLAN SHEET (ENGLISH) (REV. 06-01-09)

ORIGINAL SCALE IN INCHES FOR REDUCED PLANS 0 1 2 3

UNIT: 04
PROJECT NUMBER AND PHASE:
CONTRACT NO.: 0120F4

DISREGARD PRINTS BEARING EARLIER REVISION DATES

REVISION DATES

SHEET 02 OF 38

5/2/2013 2:31:13 PM

C:\Users\cschurr\Documents\56185_Gateway Park - Central_cschurr.rvt

Dist	COUNTY	ROUTE	POST MILES TOTAL PROJECT	SHEET No.	TOTAL SHEETS
04	ALA	80	2.0	1204bv	1204

REGISTERED CIVIL ENGINEER 05/03/13 DATE

05/03/13
PLANS APPROVAL DATE

REGISTERED PROFESSIONAL ENGINEER JOHN Wm MOUNTIN No. C 39335 Exp. 12/31/13 CIVIL STATE OF CALIFORNIA

THE HNTB OR ITS OFFICERS OR AGENTS SHALL NOT BE RESPONSIBLE FOR THE ACCURACY OR COMPLETENESS OF SCANNED COPIES OF THIS PLAN SHEET.

HNTB CORPORATION
1111 BROADWAY
9TH FLOOR
OAKLAND, CA 94607

HNTB Corporation Engineers Architects Planners

FOR COMPLETE RIGHT OF WAY AND ACCURATE ACCESS DATA, SEE RIGHT OF WAY RECORD MAPS AT DISTRICT OFFICE.

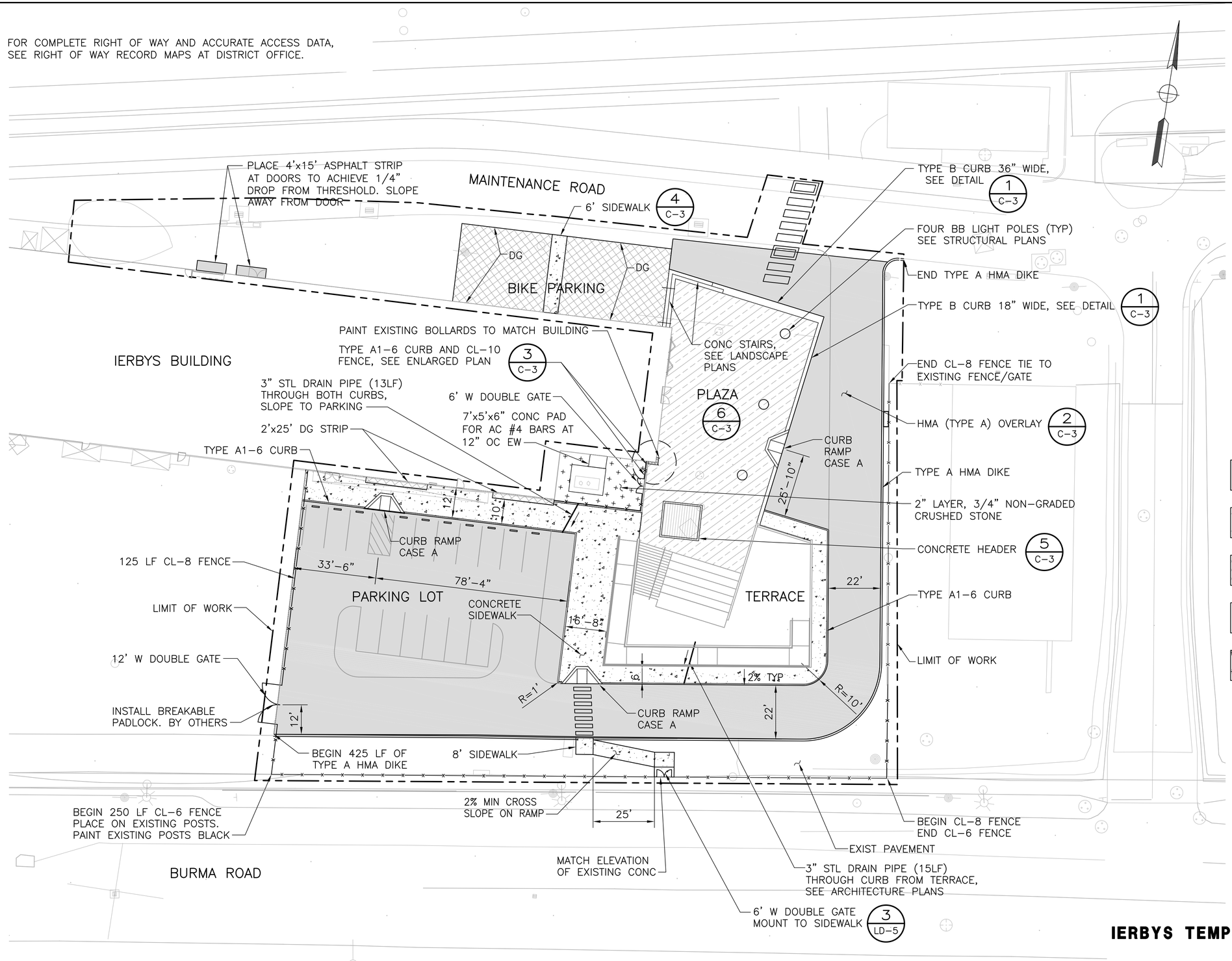

NOTES:

1. CURB RAMPS PER CALTRANS STD PLAN A88A.
2. CURBS AND DIKES PER CALTRANS STD PLAN A87A AND A87B UNLESS OTHERWISE NOTED.
3. FENCE AND GATES PER CALTRANS STD PLAN A85. ALL FENCE AND GATES SHALL BE BLACK VINYL CLAD.
4. ADJUST ALL VALVE, PULL BOX, WELL AND MANHOLE COVERS TO MATCH FINISH GRADE.
5. FOR IERBYS BUILDING LAYOUT AND IMPROVEMENTS, SEE ARCHITECTURAL PLANS.

LEGEND:

- HMA (TYPE A) OVERLAY
- PLAZA ASPHALT PAVEMENT
- DECOMPOSED GRANITE 1/4" MINUS FINES, GOLD
- CONCRETE SIDEWALK
- 3/4" NON-GRADED CRUSHED STONE

ABBREVIATIONS:

BB	BAY BRIDGE
DG	DECOMPOSED GRANITE
HMA	HOT MIX ASPHALT

05/03/13 PERMIT SET

IERBYS TEMPORARY IMPROVEMENTS - SITE LAYOUT

SCALE : 1"=20'

L-1

REVISED BY	DATE REVISED
JOHN MOUNTIN	DANIEL PARKER-KING
CALCULATED-DESIGNED BY	CHECKED BY
CONSULTANT FUNCTIONAL SUPERVISOR	KAREN WANG

STATE OF CALIFORNIA - DEPARTMENT OF TRANSPORTATION
Caltrans DESIGN

LAST REVISION 00-00-00 | DATE PLOTTED => May 01, 2013 | TIME PLOTTED => 4:12pm

Dist	COUNTY	ROUTE	POST MILES TOTAL PROJECT	SHEET No.	TOTAL SHEETS
04	ALA	80	2.0	1204bw	1204

REGISTERED CIVIL ENGINEER 05/03/13 DATE

05/03/13
PLANS APPROVAL DATE

REGISTERED PROFESSIONAL ENGINEER JOHN Wm MOUNTIN No. C 39335 Exp. 12/31/13 CIVIL STATE OF CALIFORNIA

THE HNTB OR ITS OFFICERS OR AGENTS SHALL NOT BE RESPONSIBLE FOR THE ACCURACY OR COMPLETENESS OF SCANNED COPIES OF THIS PLAN SHEET.

HNTB CORPORATION
1111 BROADWAY
9TH FLOOR
OAKLAND, CA 94607

HNTB Corporation Engineers Architects Planners

FOR COMPLETE RIGHT OF WAY AND ACCURATE ACCESS DATA, SEE RIGHT OF WAY RECORD MAPS AT DISTRICT OFFICE.

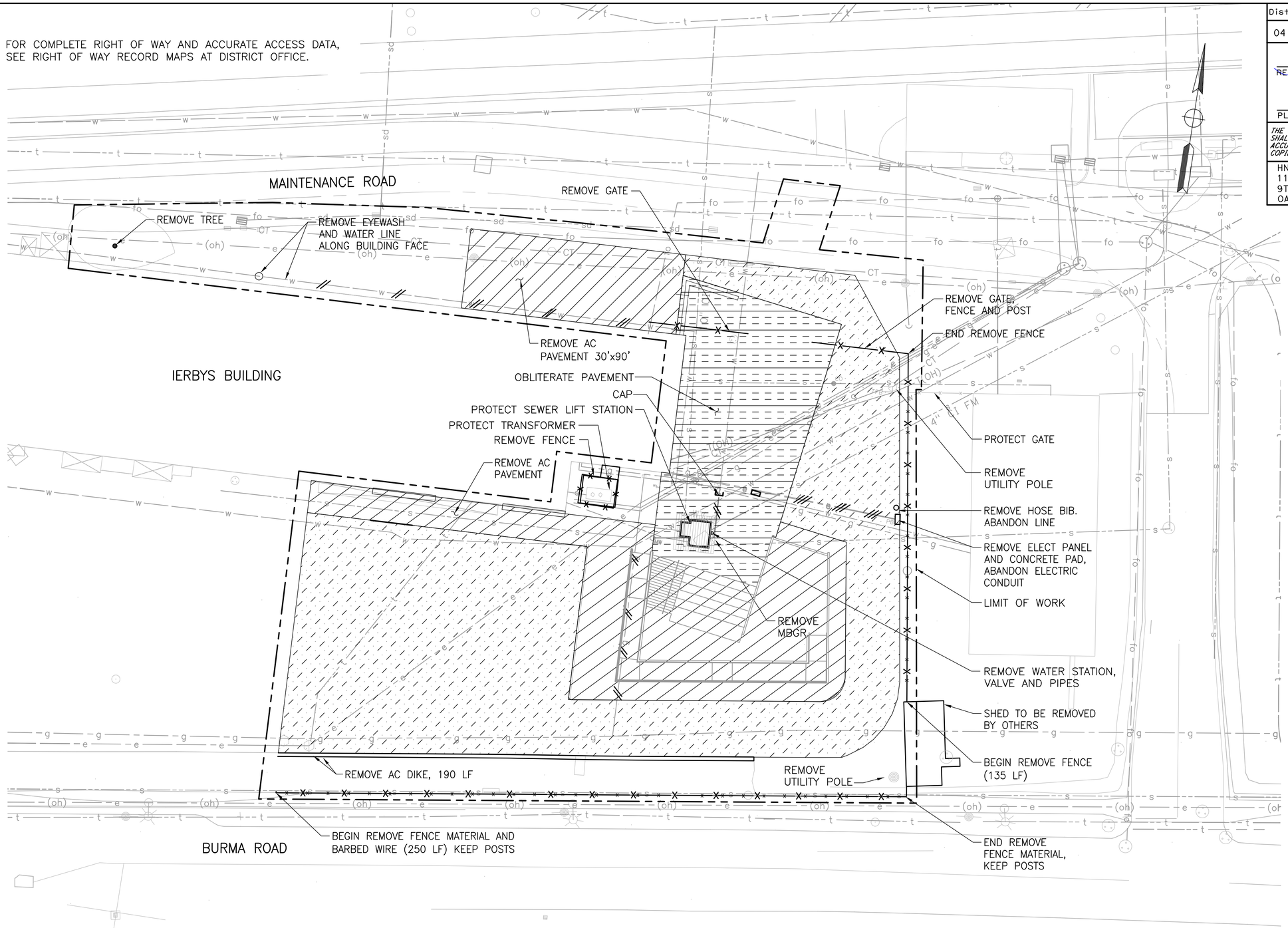

NOTE:

CONTRACTOR TO CONFIRM AND LOCATE ALL EXISTING UNDERGROUND UTILITIES IN WORK AREA.

LEGEND:

- REMOVE AC PAVEMENT
- OBLITERATE AC PAVEMENT
- 0.20' COLD PLANE AC

05/03/13 PERMIT SET

IERBYS TEMPORARY IMPROVEMENTS - SITE CONSTRUCTION DETAILS

DEMOLITION PLAN

SCALE : 1"=20'

C-1

REVISED BY	DATE REVISED
JOHN MOUNTIN	DANIEL PARKER-KING
CALCULATED-DESIGNED BY	CHECKED BY
CONSULTANT FUNCTIONAL SUPERVISOR	KAREN WANG

STATE OF CALIFORNIA - DEPARTMENT OF TRANSPORTATION
Caltrans
DESIGN

LAST REVISION 00-00-00 | DATE PLOTTED => May 01, 2013 | TIME PLOTTED => 4:07pm

Dist	COUNTY	ROUTE	POST MILES TOTAL PROJECT	SHEET No.	TOTAL SHEETS
04	ALA	80	2.0	1204bx	1204

REGISTERED CIVIL ENGINEER 05/03/13 DATE

05/03/13
PLANS APPROVAL DATE

REGISTERED PROFESSIONAL ENGINEER JOHN Wm MOUNTIN No. C 39335 Exp. 12/31/13 CIVIL STATE OF CALIFORNIA

THE HNTB OR ITS OFFICERS OR AGENTS SHALL NOT BE RESPONSIBLE FOR THE ACCURACY OR COMPLETENESS OF SCANNED COPIES OF THIS PLAN SHEET.

HNTB CORPORATION
1111 BROADWAY
9TH FLOOR
OAKLAND, CA 94607

HNTB Corporation Engineers Architects Planners

FOR COMPLETE RIGHT OF WAY AND ACCURATE ACCESS DATA, SEE RIGHT OF WAY RECORD MAPS AT DISTRICT OFFICE.

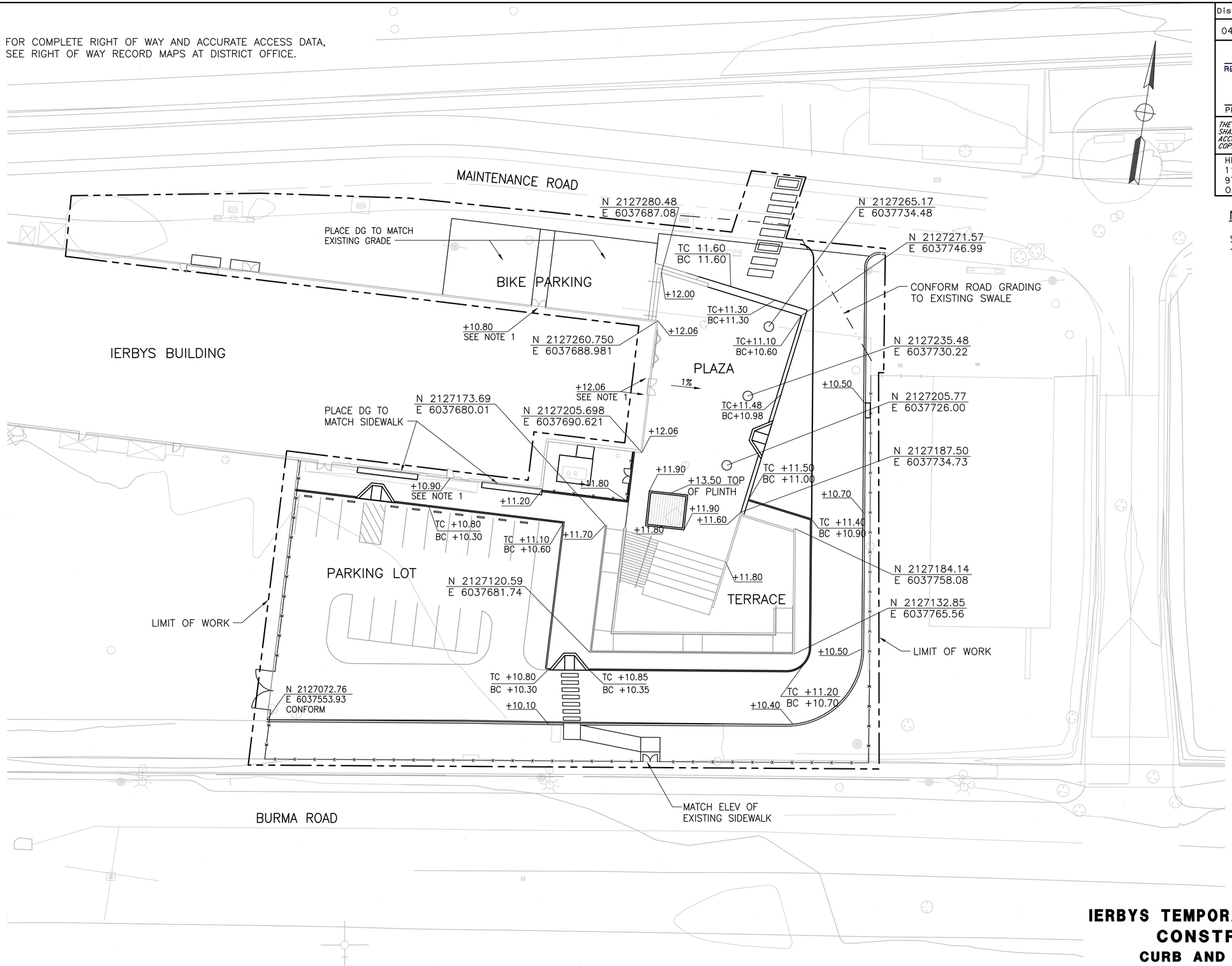

NOTE:

SIDEWALK ELEVATION AT DOOR TO BE 1/4" BELOW THRESHOLD.

05/03/13 PERMIT SET

IERBYS TEMPORARY IMPROVEMENTS - SITE CONSTRUCTION DETAILS

CURB AND PAVEMENT ELEVATION

SCALE : 1"=20'

C-2

REVISED BY	DATE REVISED
JOHN MOUNTIN	DANIEL PARKER-KING
CALCULATED-DESIGNED BY	CHECKED BY
CONSULTANT FUNCTIONAL SUPERVISOR	KAREN WANG

STATE OF CALIFORNIA - DEPARTMENT OF TRANSPORTATION
Caltrans
DESIGN

LAST REVISION 00-00-00 | DATE PLOTTED => May 01, 2013 | TIME PLOTTED => 4:09pm

Dist	COUNTY	ROUTE	POST MILES TOTAL PROJECT	SHEET No.	TOTAL SHEETS
04	ALA	80	2.0	1204by	1204

REGISTERED CIVIL ENGINEER 05/03/13 DATE

05/03/13
PLANS APPROVAL DATE

REGISTERED PROFESSIONAL ENGINEER JOHN Wm MOUNTIN No. C 39335 Exp. 12/31/13 CIVIL STATE OF CALIFORNIA

THE HNTB OR ITS OFFICERS OR AGENTS SHALL NOT BE RESPONSIBLE FOR THE ACCURACY OR COMPLETENESS OF SCANNED COPIES OF THIS PLAN SHEET.

HNTB CORPORATION
1111 BROADWAY
9TH FLOOR
OAKLAND, CA 94607

HNTB Corporation Engineers Architects Planners

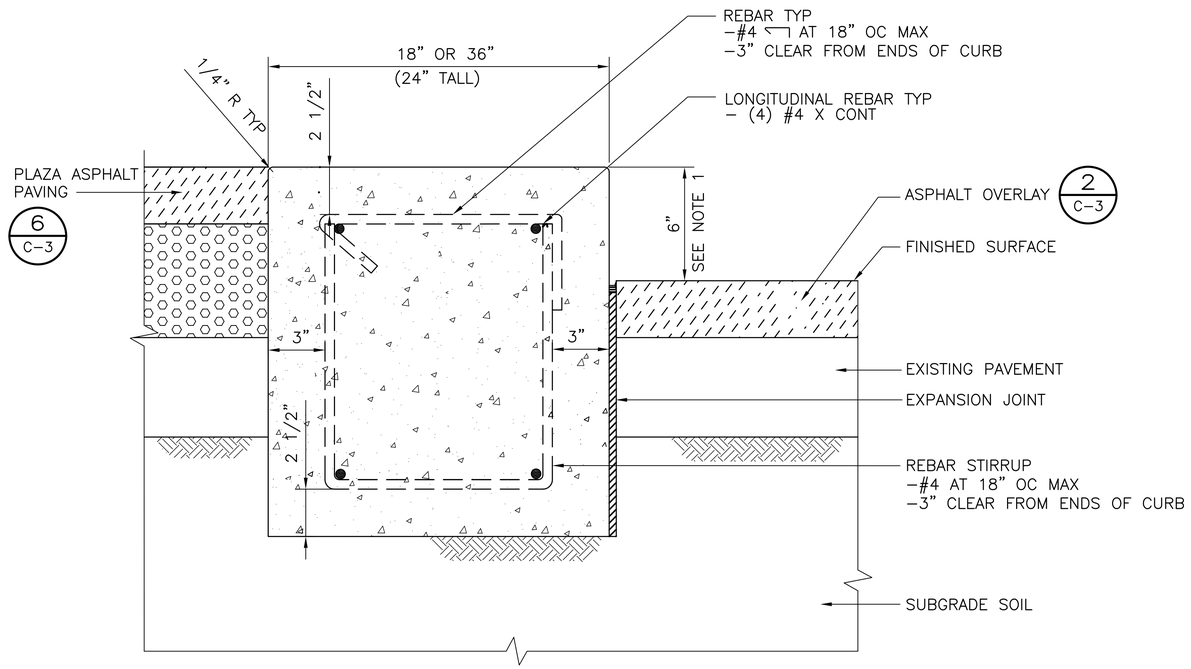

1 C-3 TYPE B CURB DETAIL
SCALE: NTS

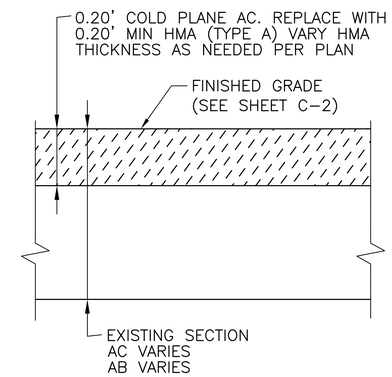

2 C-3 HMA (TYPE A) OVERLAY
SCALE: NTS

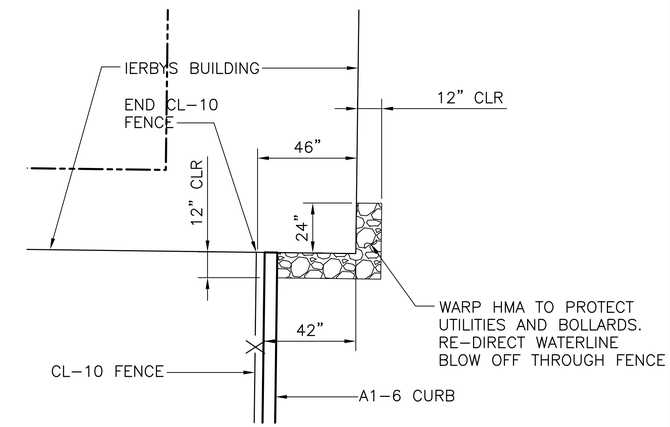

3 C-3 ENLARGED PLAN
SCALE: NTS

NOTES:

1. CURB HEIGHT IS 6" OR AS DEFINED ON GRADING PLAN.
2. JOINTS PER TYPE A1 CURB STD PLAN A87A.

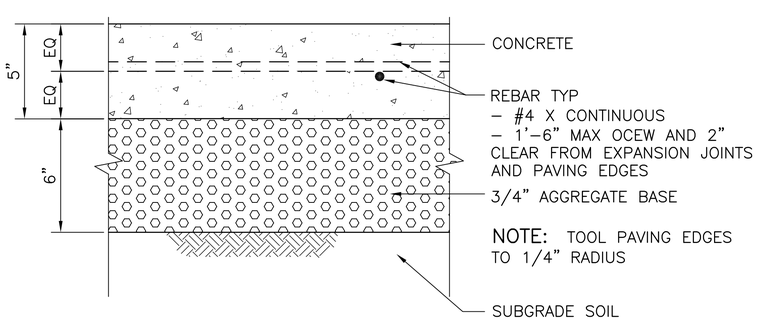

4 C-3 SIDEWALK PAVEMENT
SCALE: NTS

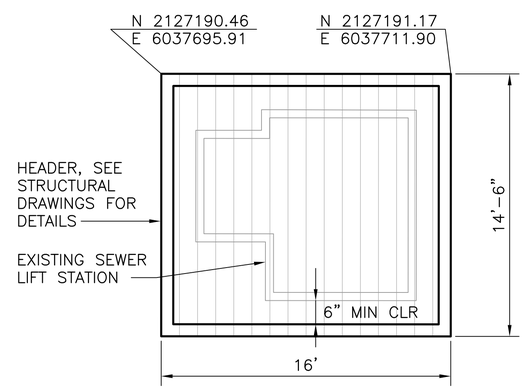

PLAN

NOTES:

1. HEADER IS BEARING SURFACE FOR LIFT STATION COVER.
2. HEADER TOP ELEVATION OF 11.90 FT., SEE STRUCTURAL PLANS.
3. MINIMUM 6" CLEAR OF LIFT STATION.

5 C-3 CONCRETE HEADER
SCALE: NTS

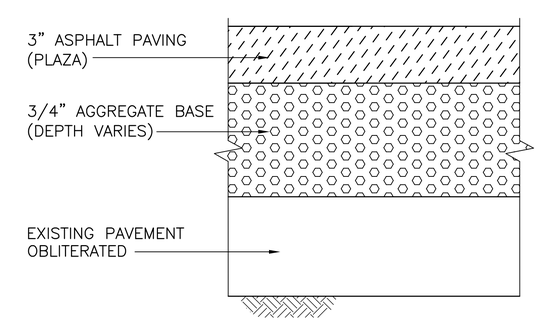

6 C-3 PLAZA ASPHALT PAVEMENT
SCALE: NTS

IERBYS TEMPORARY IMPROVEMENTS - SITE CONSTRUCTION DETAILS

NO SCALE

C-3

05/03/13 PERMIT SET

REVISED BY	DATE REVISED
JOHN MOUNTIN	DANIEL PARKER-KING
CALCULATED-DESIGNED BY	CHECKED BY
CONSULTANT FUNCTIONAL SUPERVISOR	KAREN WANG

STATE OF CALIFORNIA - DEPARTMENT OF TRANSPORTATION
Caltrans
DESIGN

LAST REVISION 00-00-00 | DATE PLOTTED => May 01, 2013 | TIME PLOTTED => 3:58pm

Dist	COUNTY	ROUTE	POST MILES TOTAL PROJECT	SHEET No.	TOTAL SHEETS
04	ALA	80	2.0	1204bz	1204

REGISTERED CIVIL ENGINEER 05/03/13 DATE

05/03/13
PLANS APPROVAL DATE

REGISTERED PROFESSIONAL ENGINEER JOHN Wm MOUNTIN No. C 39335 Exp. 12/31/13 CIVIL STATE OF CALIFORNIA

THE HNTB OR ITS OFFICERS OR AGENTS SHALL NOT BE RESPONSIBLE FOR THE ACCURACY OR COMPLETENESS OF SCANNED COPIES OF THIS PLAN SHEET.

HNTB CORPORATION
1111 BROADWAY
9TH FLOOR
OAKLAND, CA 94607

HNTB Corporation Engineers Architects Planners

FOR COMPLETE RIGHT OF WAY AND ACCURATE ACCESS DATA, SEE RIGHT OF WAY RECORD MAPS AT DISTRICT OFFICE.

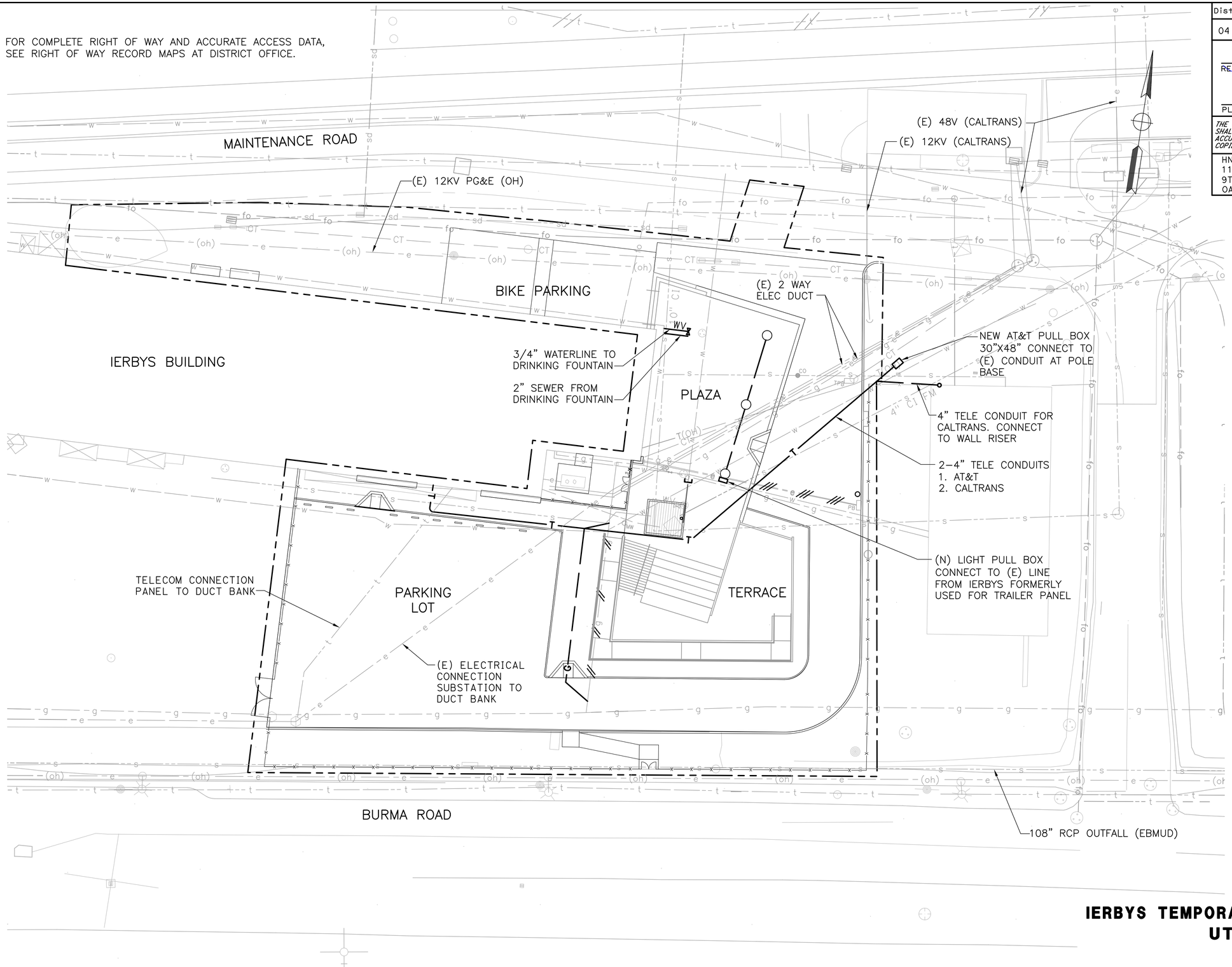

NOTES:

1. THE CONTRACTOR MUST NOT STORE MATERIALS NOR OPERATE EQUIPMENT OR VEHICLES WITHIN 13 FEET FROM CENTERLINE OF 108" EBMUD OUT FALL PIPE.
2. FOR IERBYS BUILDING TELEPHONE, CABLE, ELECTRICAL LINES CONNECTIONS, SEE BUILDING ELECTRICAL PLANS.

05/03/13 PERMIT SET

IERBYS TEMPORARY IMPROVEMENTS - SITE UTILITY PLAN

SCALE : 1"=20'

U-1

THIS PLAN FOR UTILITY WORK ONLY

STATE OF CALIFORNIA - DEPARTMENT OF TRANSPORTATION
Caltrans DESIGN

CONSULTANT FUNCTIONAL SUPERVISOR: KAREN WANG
CALCULATED-DESIGNED BY: JOHN MOUNTIN
CHECKED BY: DANIEL PARKER-KING
REVISED BY
DATE REVISED

LAST REVISION 00-00-00 | DATE PLOTTED => May 01, 2013 | TIME PLOTTED => 4:19pm

Dist	COUNTY	ROUTE	POST MILES TOTAL PROJECT	SHEET No.	TOTAL SHEETS
04	ALA	80	2.0	1204ca	1204

REGISTERED CIVIL ENGINEER 05/03/13 DATE

05/03/13
PLANS APPROVAL DATE

REGISTERED PROFESSIONAL ENGINEER JOHN Wm MOUNTIN No. C 39335 Exp. 12/31/13 CIVIL STATE OF CALIFORNIA

THE HNTB OR ITS OFFICERS OR AGENTS SHALL NOT BE RESPONSIBLE FOR THE ACCURACY OR COMPLETENESS OF SCANNED COPIES OF THIS PLAN SHEET.

HNTB CORPORATION
1111 BROADWAY
9TH FLOOR
OAKLAND, CA 94607

HNTB Corporation Engineers Architects Planners

FOR COMPLETE RIGHT OF WAY AND ACCURATE ACCESS DATA, SEE RIGHT OF WAY RECORD MAPS AT DISTRICT OFFICE.

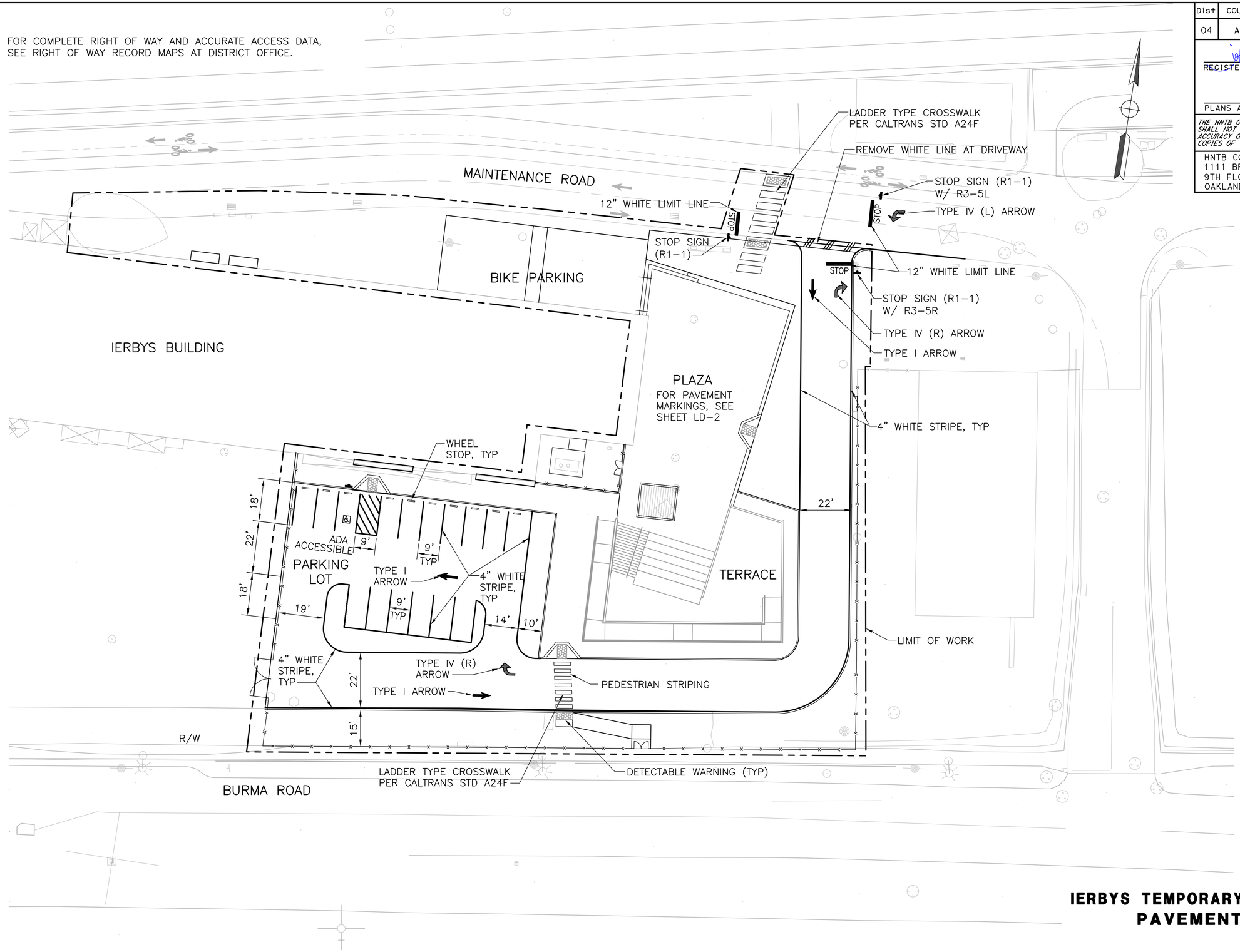

05/03/13 PERMIT SET

IERBYS TEMPORARY IMPROVEMENTS - SITE PAVEMENT DELINEATION

SCALE : 1"=20'

THIS PLAN ACCURATE FOR PAVEMENT DELINEATION WORK ONLY

PD-1

REVISED BY	DATE REVISED

CALCULATED-DESIGNED BY	JOHN MOUNTIN
CHECKED BY	DANIEL PARKER-KING
CONSULTANT FUNCTIONAL SUPERVISOR	KAREN WANG

STATE OF CALIFORNIA - DEPARTMENT OF TRANSPORTATION
Caltrans
DESIGN

LAST REVISION 00-00-00 | DATE PLOTTED => May 01, 2013 | TIME PLOTTED => 4:15pm

Dist	COUNTY	ROUTE	POST MILES TOTAL PROJECT	SHEET No.	TOTAL SHEETS
04	ALA	80	2.0	1204cb	1204

STUART H. BUSSIAN
LICENSED LANDSCAPE ARCHITECT

05/03/13
PLANS APPROVAL DATE

LICENSED LANDSCAPE ARCHITECT
STUART H. BUSSIAN No. 4143
Signature
06-30-13
Renewal Date
05-03-13
Date
STATE OF CALIFORNIA

THE HNTB OR ITS OFFICERS OR AGENTS SHALL NOT BE RESPONSIBLE FOR THE ACCURACY OR COMPLETENESS OF SCANNED COPIES OF THIS PLAN SHEET.

HNTB CORPORATION
1111 BROADWAY
9TH FLOOR
OAKLAND, CA 94607

HNTB Corporation Engineers Architects Planners

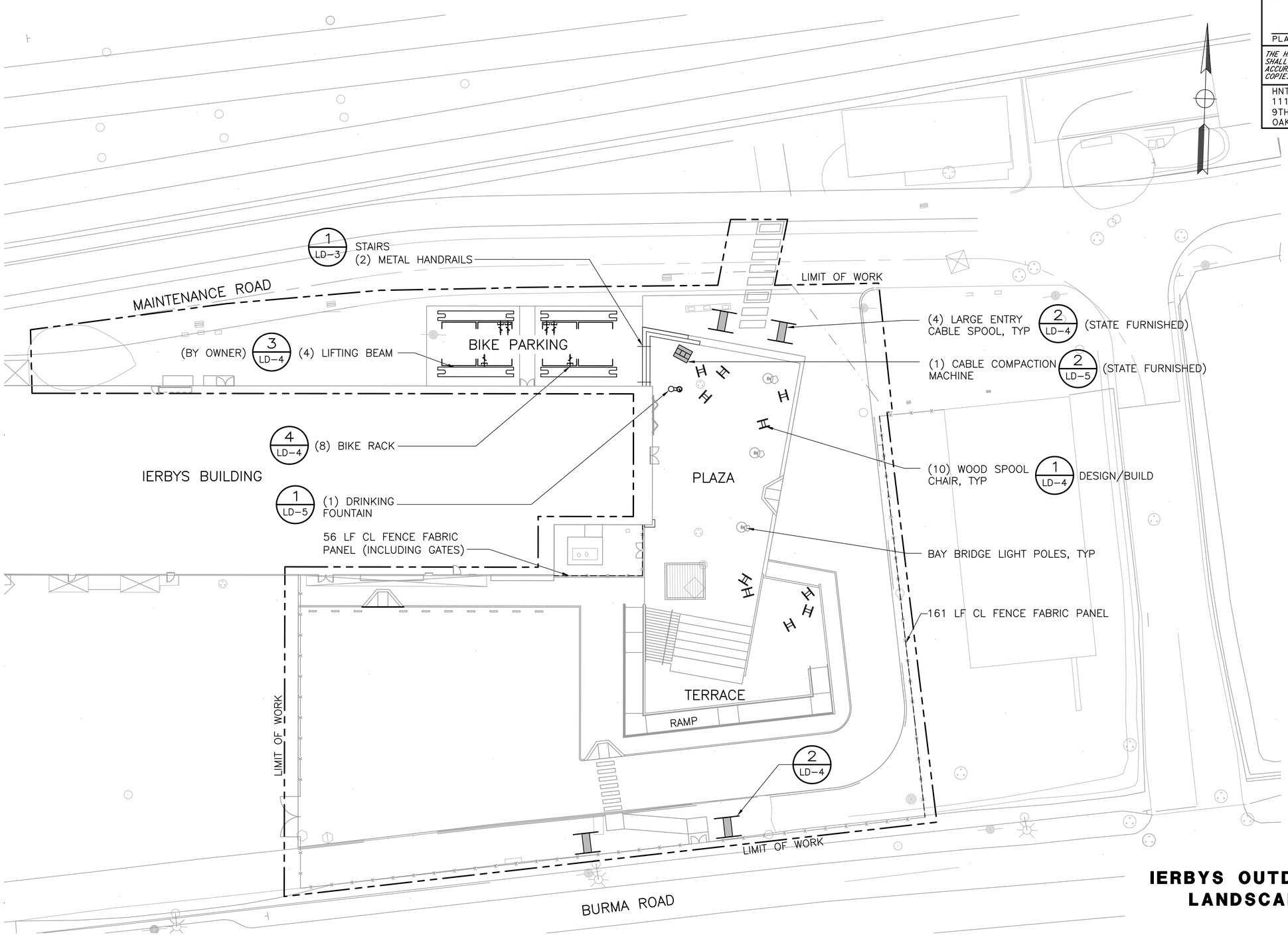

NOTES:

1. FIELD LOCATE WOOD SPOOL CHAIRS, LIFTING BEAM AND CABLE COMPACTION MACHINE AND LARGE CABLE SPOOL.
2. FOR IERBYS BUILDING LAYOUT AND IMPROVEMENTS, SEE INDOOR PACKAGE OF ARCHITECTURAL PLANS.
3. FOR TERRACE STAIR, HANDRAIL AND RAMP DETAILS, SEE OUTDOOR PACKAGE OF ARCHITECTURAL PLANS.
4. FOR TERRACE FLOOR, WALL AND BB LIGHT POLE FOUNDATIONS, SEE STRUCTURAL PLANS.
5. DESIGN/BUILD WOOD SPOOL CHAIRS SHOP DRAWINGS SHALL BE APPROVED BY THE OWNER PRIOR TO DELIVERY.

05/03/13 PERMIT SET

IERBYS OUTDOOR IMPROVEMENTS LANDSCAPE LAYOUT PLAN

SCALE : 1"=20'

LD-1

REVISED BY	DATE REVISED
MARIA DADE	STUART BUSSIAN

CALCULATED-DESIGNED BY
CHECKED BY

CONSULTANT FUNCTIONAL SUPERVISOR
KAREN WANG

STATE OF CALIFORNIA - DEPARTMENT OF TRANSPORTATION
Caltrans
DESIGN

LAST REVISION 00-00-00
DATE PLOTTED => May 02, 2013
TIME PLOTTED => 11:07am

Dist	COUNTY	ROUTE	POST MILES TOTAL PROJECT	SHEET No.	TOTAL SHEETS
04	ALA	80	2.0	1204cc	1204

STUART H. BUSSIAN
LICENSED LANDSCAPE ARCHITECT

05/03/13
PLANS APPROVAL DATE

LICENSED LANDSCAPE ARCHITECT
STUART H. BUSSIAN No. 4143
Signature
06-30-13
Renewal Date
05-03-13
Date
STATE OF CALIFORNIA

THE HNTB OR ITS OFFICERS OR AGENTS SHALL NOT BE RESPONSIBLE FOR THE ACCURACY OR COMPLETENESS OF SCANNED COPIES OF THIS PLAN SHEET.

HNTB CORPORATION
1111 BROADWAY
9TH FLOOR
OAKLAND, CA 94607

HNTB Corporation Engineers Architects Planners

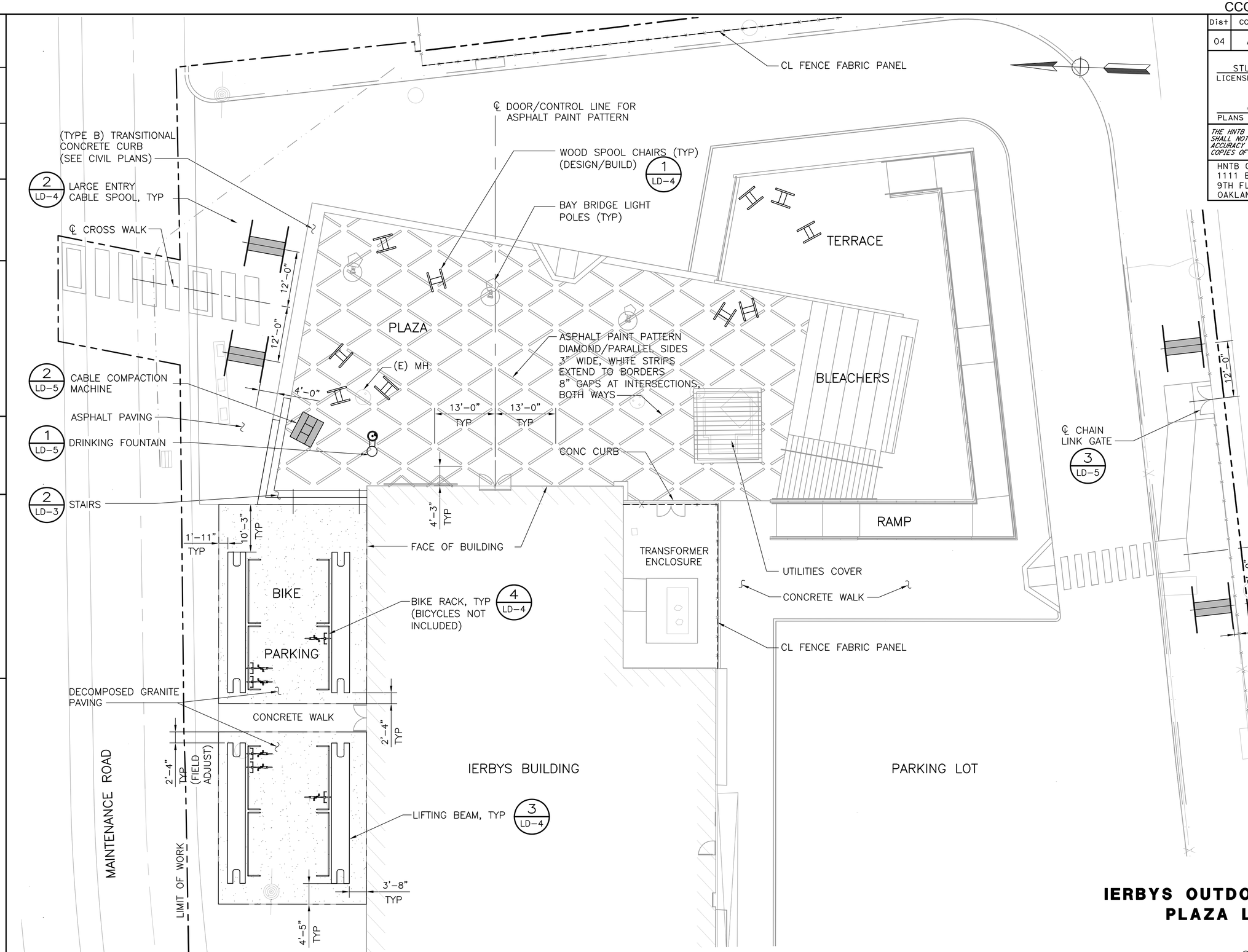

NOTES:

1. FIELD LOCATE WOOD SPOOL CHAIRS, LIFTING BEAMS AND CABLE COMPACTION MACHINE (STATE FURNISHED).
2. FOR GRADING, PAVEMENT, TRANSITIONAL CONC CURB, CHAIN LINK FENCE, GATE, UTILITIES COVER AND BB LIGHT POLES LOCATION, SEE CIVIL PLANS.
3. FOR IERBYS BUILDNG LAYOUT AND IMPROVEMENTS, SEE INDOOR PACKAGE OF ARCHITECTURAL PLANS.
4. FOR TERRACE STAIRS, HANDRAIL AND RAMP DETAILS, SEE OUTDOOR PACKAGE OF ARCHITECTURAL PLANS.
5. FOR TERRACE FLOOR, WALL AND BB LIGHT POLE FOUNDATIONS, SEE STRUCTURAL PLANS.
6. PLAZA MARKINGS SHALL BE 3" WIDE WHITE DURABLE PAINT.

05/03/13 PERMIT SET

IERBYS OUTDOOR IMPROVEMENTS
PLAZA LAYOUT PLAN

SCALE : 1"=10'

LD-2

REVISED BY	DATE REVISED

CALCULATED-DESIGNED BY	CHECKED BY
MARIA DADE	STUART BUSSIAN

CONSULTANT FUNCTIONAL SUPERVISOR: KAREN WANG

STATE OF CALIFORNIA - DEPARTMENT OF TRANSPORTATION
Caltrans
DESIGN

LAST REVISION 00-00-00 | DATE PLOTTED => May 02, 2013 | TIME PLOTTED => 11:15am

Dist	COUNTY	ROUTE	POST MILES TOTAL PROJECT	SHEET No.	TOTAL SHEETS
04	ALA	80	2.0	1204cd	1204

STUART H. BUSSIAN
LICENSED LANDSCAPE ARCHITECT

05/03/13
PLANS APPROVAL DATE

LICENSED LANDSCAPE ARCHITECT — STUART H. BUSSIAN No. 2443 — Signature 06-30-13 — Renewal Date 05-03-13 — Date — STATE OF CALIFORNIA

THE HNTB OR ITS OFFICERS OR AGENTS SHALL NOT BE RESPONSIBLE FOR THE ACCURACY OR COMPLETENESS OF SCANNED COPIES OF THIS PLAN SHEET.

HNTB CORPORATION
1111 BROADWAY
9TH FLOOR
OAKLAND, CA 94607

HNTB Corporation Engineers Architects Planners

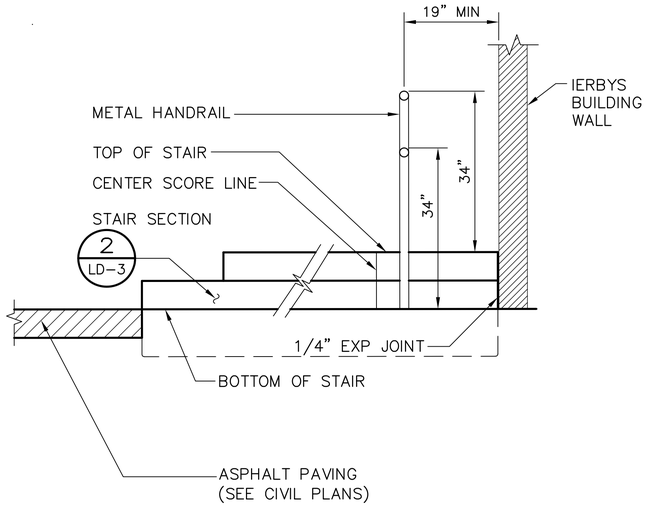

SECTION A-A

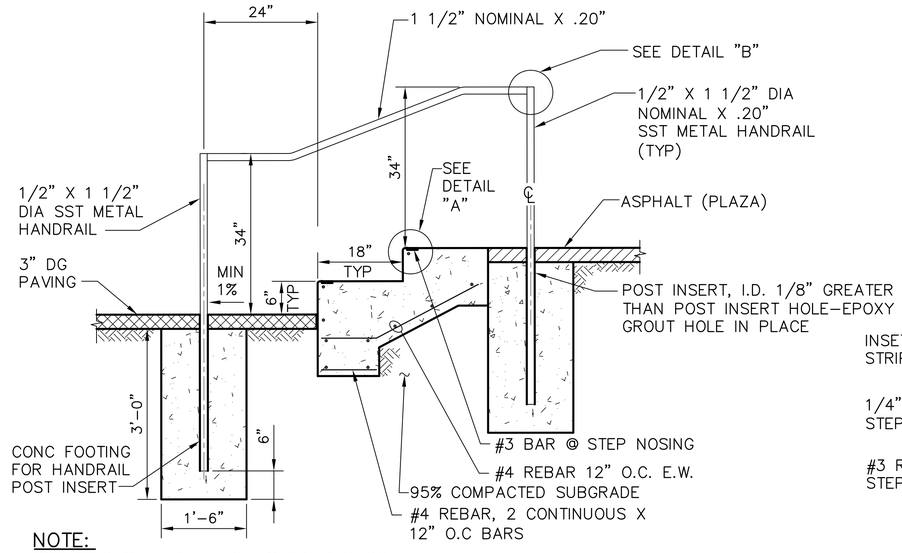

NOTE:
CONTINUOUS WELD AT JOINTS GRIND SMOOTH

SECTION B-B

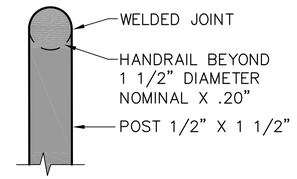

DETAIL "B"

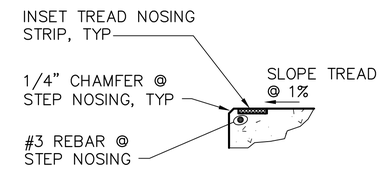

DETAIL "A"

NOTES:

1. FOR GRADING, PAVEMENT, TRANSITIONAL CONC CURB, CHAIN LINK FENCE, GATE, UTILITIES COVER AND BB LIGHT POLES LOCATION, SEE CIVIL PLANS.
2. FOR RAISED TERRACE RAILINGS, RAMPS, BLEACHERS, STAIRS, AND UTILITY BOX COVER, SEE STRUCTURAL AND ARCHITECTURAL PLANS.
3. SEE SHEET U-1 (UTILITY PLAN) FOR DRINKING FOUNTAIN WATERLINE CONNECTIONS AND COORDINATION.

1 LD-3 **STAIR DETAILS**
SCALE: NTS

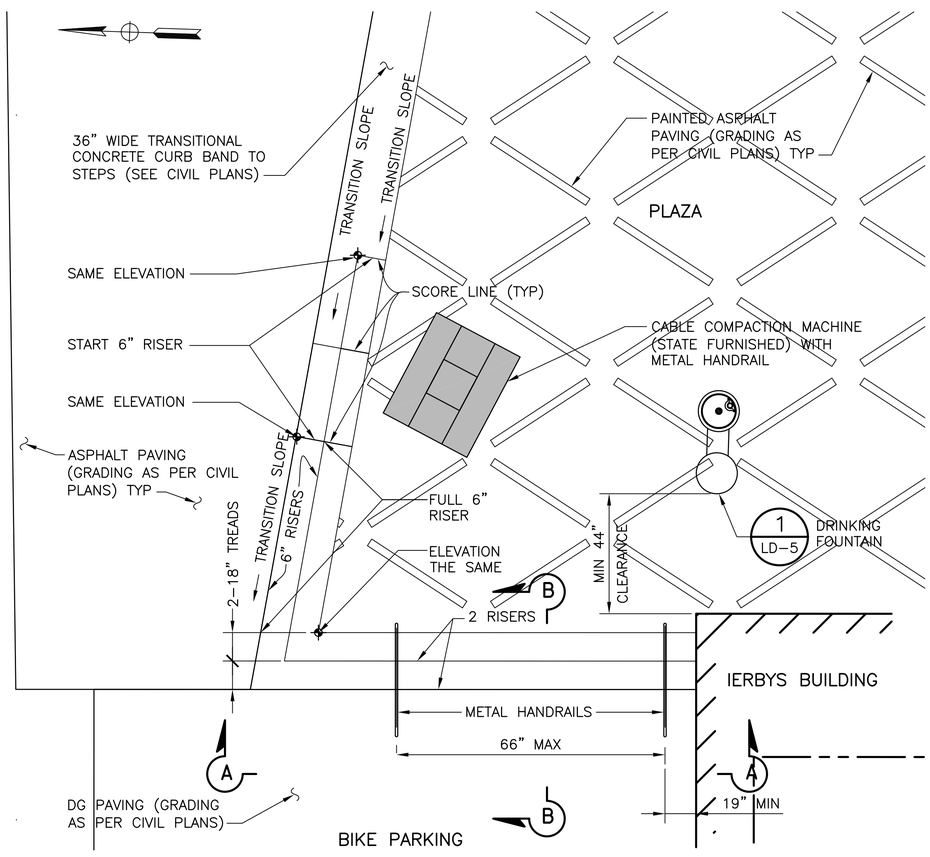

2 LD-3 **STAIR LAYOUT PLAN**
SCALE: NTS

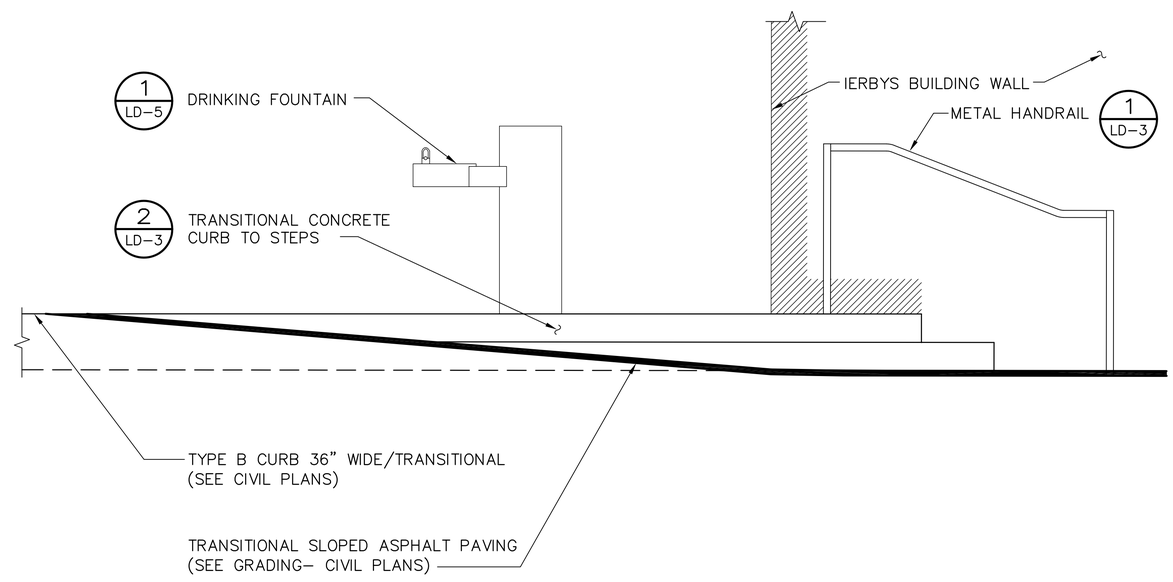

3 LD-3 **STAIR NORTH ELEVATION**
SCALE: NTS

IERBYS OUTDOOR IMPROVEMENTS
LANDSCAPE DETAILS

SCALE : AS SHOWN

LD-3

05/03/13 PERMIT SET

LAST REVISION 00-00-00 | DATE PLOTTED => May 02, 2013 | TIME PLOTTED => 11:51am

STATE OF CALIFORNIA - DEPARTMENT OF TRANSPORTATION
Caltrans DESIGN
CONSULTANT FUNCTIONAL SUPERVISOR: KAREN WANG
CALCULATED-DESIGNED BY: MARIA DADE
CHECKED BY: STUART BUSSIAN
REVISED BY
DATE REVISED

Dist	COUNTY	ROUTE	POST MILES TOTAL PROJECT	SHEET No.	TOTAL SHEETS
04	ALA	80	2.0	1204ce	1204

STUART H. BUSSIAN
LICENSED LANDSCAPE ARCHITECT

05/03/13
PLANS APPROVAL DATE

LICENSED LANDSCAPE ARCHITECT — STUART H. BUSSIAN No. 4143 — Signature 06-30-13 — Renewal Date 05-03-13 — Date — STATE OF CALIFORNIA

THE HNTB OR ITS OFFICERS OR AGENTS SHALL NOT BE RESPONSIBLE FOR THE ACCURACY OR COMPLETENESS OF SCANNED COPIES OF THIS PLAN SHEET.

HNTB CORPORATION
1111 BROADWAY
9TH FLOOR
OAKLAND, CA 94607

HNTB Corporation Engineers Architects Planners

NOTE:

1. FOR GRADING, PAVING AND LIGHT POLE COORDINATION, SEE CIVIL PLANS.

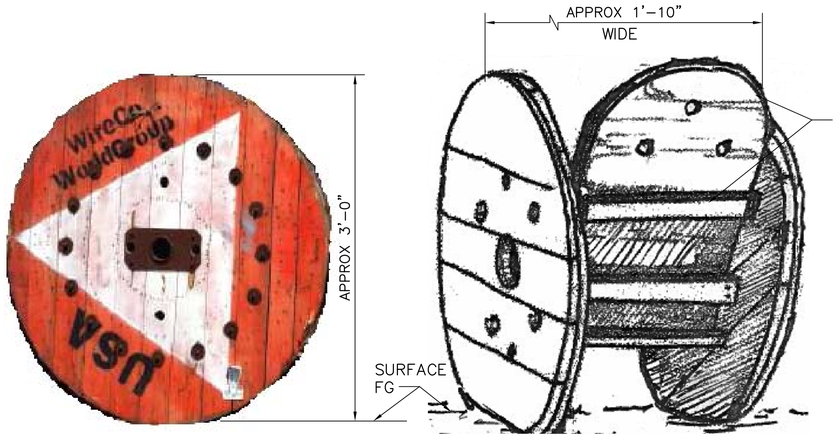

1 / LD-4 **WOOD SPOOL CHAIR**
SCALE: NTS

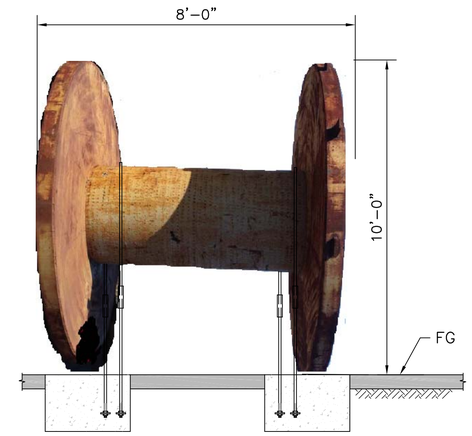

- STATE FURNISHED SPOOLS
- FOR FOUNDATION AND FIXATION, SEE STRUCTURAL PLANS

2 / LD-4 **LARGE CABLE SPOOL ENTRY FEATURE**
SCALE: NTS

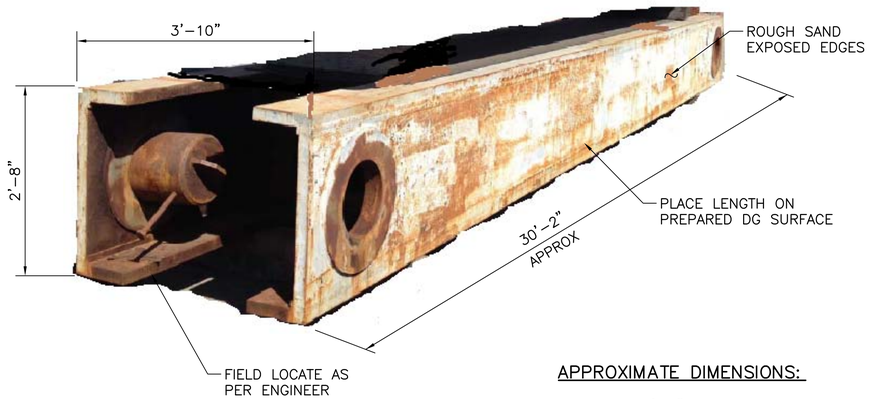

APPROXIMATE DIMENSIONS:

LENGTH	30'-2"
HEIGHT	2'-8"
WIDTH	3'-10"

- STATE FURNISHED BEAM

3 / LD-4 **LIFTING BEAM**
SCALE: NTS

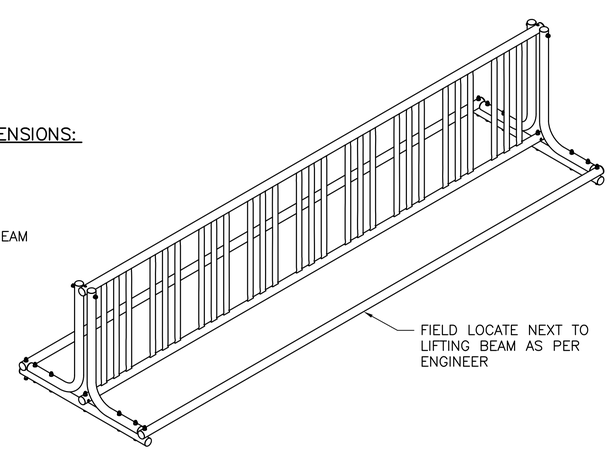

BIKE RACKS:

- GATE STYLE
- STEEL/METAL PIPE (NON ALUMINUM)
- LINEAR
- 15–20 STALLS (EACH) PER RACK/UNIT
- UPRIGHT STABLE, FREE STANDING

4 / LD-4 **BIKE RACK**
SCALE: NTS

IERBYS OUTDOOR IMPROVEMENTS
LANDSCAPE DETAILS

SCALE : AS SHOWN

LD-4

05/03/13 PERMIT SET

LAST REVISION 00-00-00 | DATE PLOTTED => May 02, 2013 | TIME PLOTTED => 12:30pm

STATE OF CALIFORNIA - DEPARTMENT OF TRANSPORTATION
Caltrans DESIGN
CONSULTANT FUNCTIONAL SUPERVISOR: KAREN WANG
CALCULATED-DESIGNED BY: MARIA DADE
CHECKED BY: STUART BUSSIAN
REVISED BY
DATE REVISED

Dist	COUNTY	ROUTE	POST MILES TOTAL PROJECT	SHEET No.	TOTAL SHEETS
04	ALA	80	2.0	1204cf	1204

STUART H. BUSSIAN
LICENSED LANDSCAPE ARCHITECT

05/03/13
PLANS APPROVAL DATE

LICENSED LANDSCAPE ARCHITECT
STUART H. BUSSIAN No. 4443
Signature
06-30-13
Renewal Date
05-03-13
Date
STATE OF CALIFORNIA

THE HNTB OR ITS OFFICERS OR AGENTS SHALL NOT BE RESPONSIBLE FOR THE ACCURACY OR COMPLETENESS OF SCANNED COPIES OF THIS PLAN SHEET.

HNTB CORPORATION
1111 BROADWAY
9TH FLOOR
OAKLAND, CA 94607

HNTB Corporation Engineers Architects Planners

DESCRIPTION:

- OUTDOOR
- BARRIER FREE/ADA COMPLIANT
- SINGLE STATION FAUCET
- NON-REFRIGERATED
- PUSH BUTTON
- STEEL PEDESTAL
- COLOR AS PER OWNER

MANUFACTURERS:

1. HAWS/MODEL 3377G
2. HALSEY TAYLOR/MODEL 4410
3. KAY PARK RECREATION/MODEL KP47SHF OR EQUAL

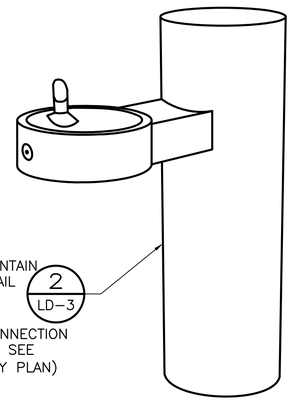

FOR DRINIKNG FOUNTAIN LOCATION SEE DETAIL 2/LD-3

FOR WATERLINE CONNECTION AND COORDINATION SEE SHEET U-1 (UTILITY PLAN)

1/LD-5 **DRINKING FOUNTAIN**
SCALE: NTS

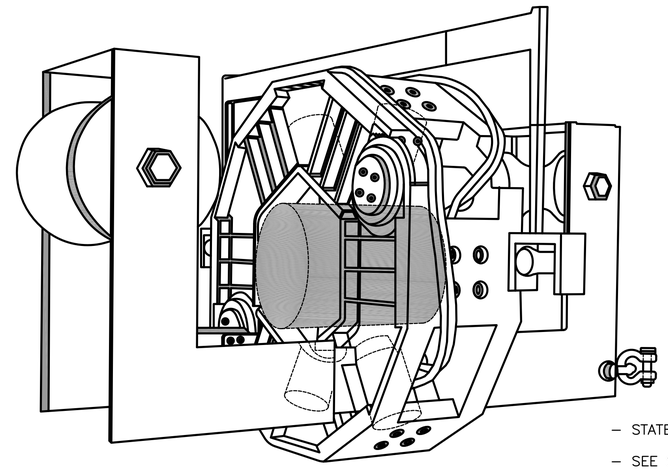

- STATE FURNISHED MACHINE
- SEE SHEET LD-3 FOR GENERAL LOCATION
- FIELD LOCATE MACHINE AND HANDRAIL AS PER ENGINEER
- PLACE METAL HANDRAIL AROUND MACHINE PER 1/LD-3

PLACE IN RECTANGULAR LAYOUT 2 FEET CLEAR OF MACHINE. MAXIMUM 6 FEET SPACING FOR POSTS.

2/LD-5 **CABLE COMPACTION MACHINE**
SCALE: NTS

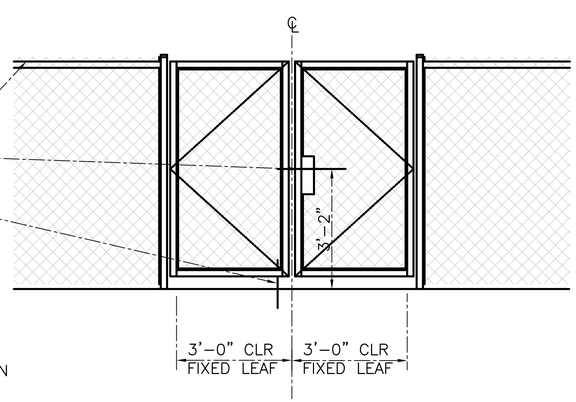

NOTE:
FOR DETAILS NOT SHOWN SEE STD PLAN A85A

3/LD-5 **PEDESTRIAN GATE**
SCALE: NTS

05/03/13 PERMIT SET

IERBYS OUTDOOR IMPROVEMENTS
LANDSCAPE DETAILS

SCALE : AS SHOWN

LD-5

REVISED BY	DATE REVISED
MARIA DADE	STUART BUSSIAN
CALCULATED-DESIGNED BY	CHECKED BY
CONSULTANT FUNCTIONAL SUPERVISOR	KAREN WANG

STATE OF CALIFORNIA - DEPARTMENT OF TRANSPORTATION
Caltrans
DESIGN

LAST REVISION 00-00-00 | DATE PLOTTED => May 02, 2013 | TIME PLOTTED => 12:41pm

DIST.	COUNTY	ROUTE	POST MILES TOTAL PROJECT	SHEET N0.	TOTAL SHEETS
04	Ala	80	2.0	1204cg	1204

REGISTERED ARCHITECT — DATE 05/03/13

LICENSED ARCHITECT — GREGORY P. BAKER — C-16884 — 10.31.2013 — STATE OF CALIFORNIA

05/03/13
PLANS APPROVAL DATE

RENEWAL DATE

The State of California or its officers or agents shall not be responsible for the accuracy or completeness of electronic copies of this plan sheet.

HNTB CORPORATION
1111 BROADWAY
9TH FLOOR
OAKLAND, CA 94607

HNTB Corporation
Engineers Architects Planners

Caltrans now has a web site! To get to the web site, go to http://www/dot.ca.gov

NOTE: ELEVATIONS SHOWN ARE FOR REFERENCE ONLY; FOR TRUE GRADE ELEVATIONS, SEE CIVIL

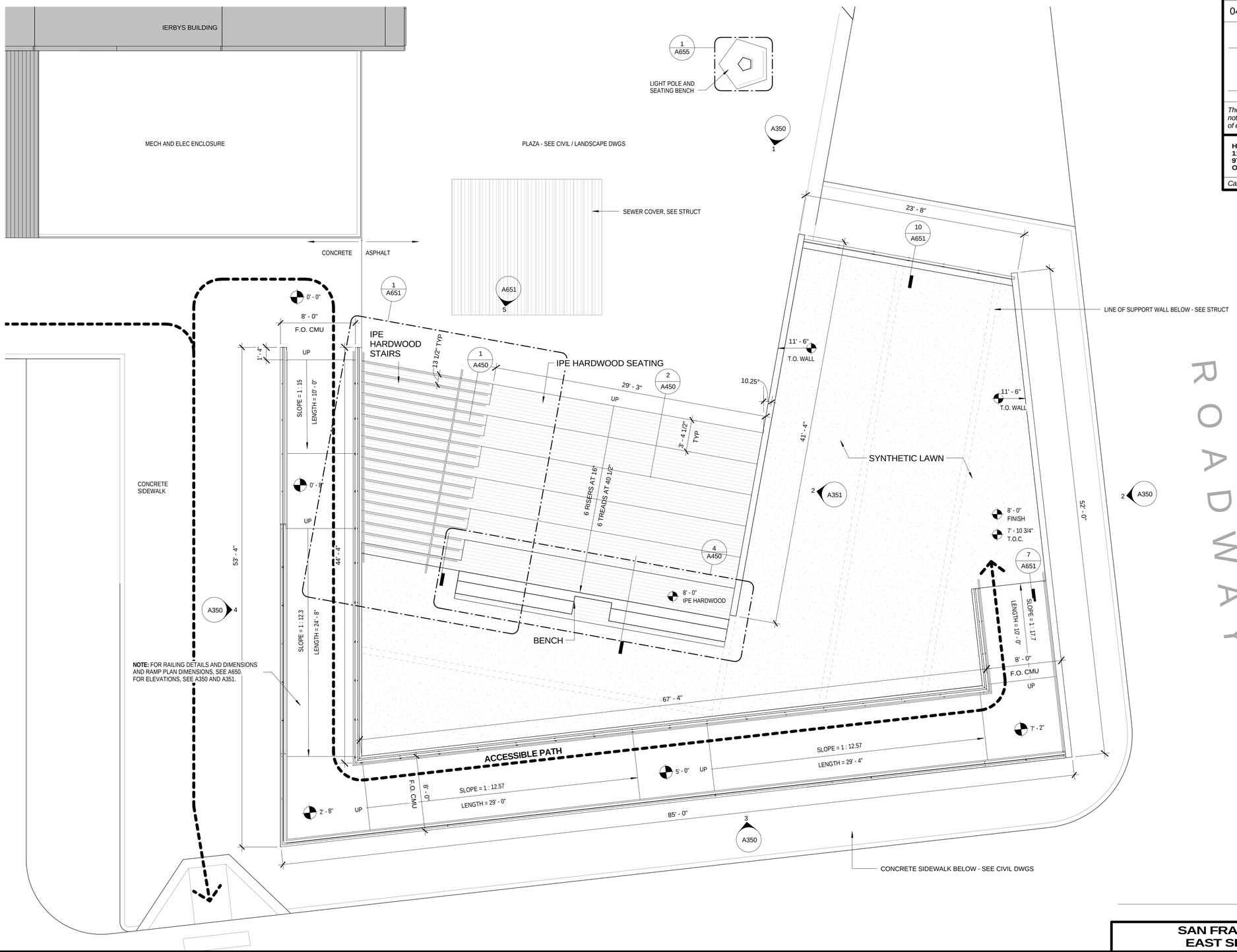

NOTE: FOR RAILING DETAILS AND DIMENSIONS AND RAMP PLAN DIMENSIONS, SEE A650. FOR ELEVATIONS, SEE A350 AND A351.

RAISED TERRACE (1)
3/16" = 1'-0"

05/03/13 PERMIT SET

SAN FRANCISCO OAKLAND BAY BRIDGE
EAST SPAN SEISMIC SAFETY PROJECT

IERBYS TEMPORARY IMPROVEMENTS - SITE

RAISED TERRACE - PLAN

A250

QUINCY WONG
DESIGN OVERSIGHT
05/03/13
SIGN OFF DATE

	BY	CHECKED
DESIGN	COREY SCHURR	GREGORY BAKER
DETAILS		
QUANTITIES		

PREPARED FOR THE STATE OF CALIFORNIA DEPARTMENT OF TRANSPORTATION

KAREN Y. WANG
PROJECT ENGINEER

BRIDGE NO.
POST MILE 2.0

DESIGN GENERAL PLAN SHEET (ENGLISH) (REV. 06-01-09)

ORIGINAL SCALE IN INCHES FOR REDUCED PLANS 0 1 2 3

UNIT: 04
PROJECT NUMBER AND PHASE: CONTRACT NO.: 0120F4

DISREGARD PRINTS BEARING EARLIER REVISION DATES

REVISION DATES

SHEET 14 OF 38

C:\Users\cschurr\Documents\56185_Gateway Park - Central_cschurr.rvt

5/2/2013 5:51:47 PM

DIST.	COUNTY	ROUTE	POST MILES TOTAL PROJECT	SHEET N0.	TOTAL SHEETS
04	Ala	80	2.0	1204ch	1204

REGISTERED ARCHITECT — 05/03/13 DATE

05/03/13
PLANS APPROVAL DATE

LICENSED ARCHITECT — GREGORY P. BAKER — C-16884 — 10.31.2013 RENEWAL DATE — STATE OF CALIFORNIA

The State of California or its officers or agents shall not be responsible for the accuracy or completeness of electronic copies of this plan sheet.

HNTB CORPORATION
1111 BROADWAY
9TH FLOOR
OAKLAND, CA 94607

HNTB Corporation Engineers Architects Planners

Caltrans now has a web site! To get to the web site, go to http:/www/dot.ca.gov

NOTE: BURNISHED CMU FACE ON ALL SIGHT EXPOSED FACES. LOCATE ALL OPENINGS IN CMU WITHIN BLOCK MODULE

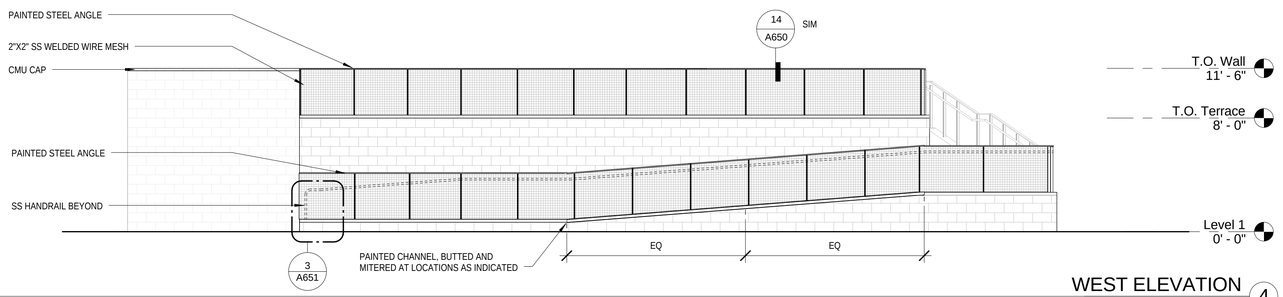

WEST ELEVATION 4
3/16" = 1'-0"

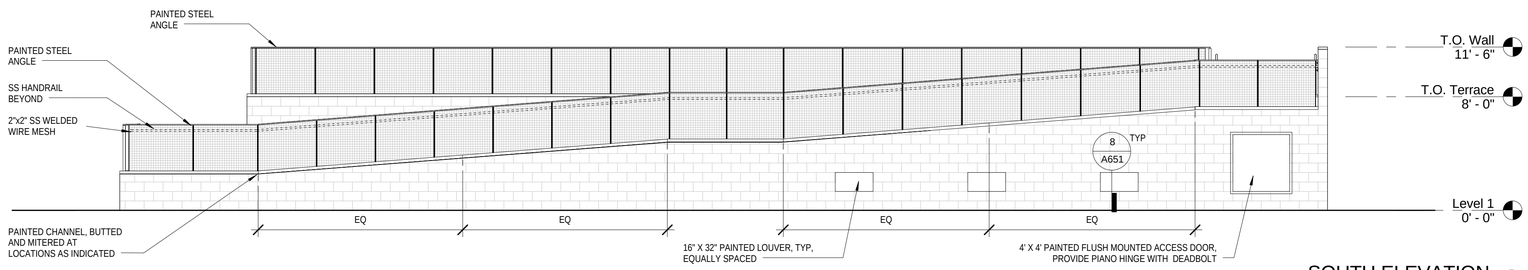

SOUTH ELEVATION 3
3/16" = 1'-0"

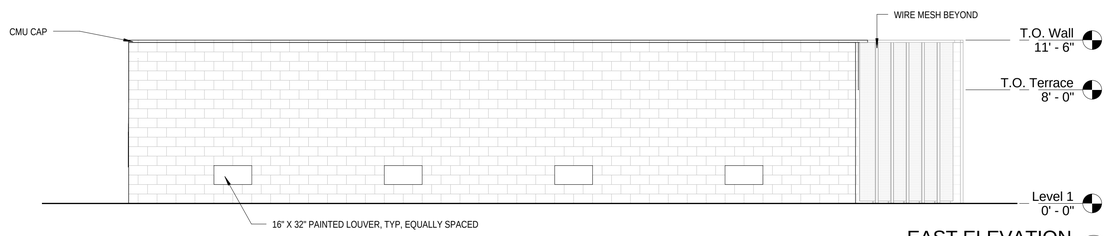

EAST ELEVATION 2
3/16" = 1'-0"

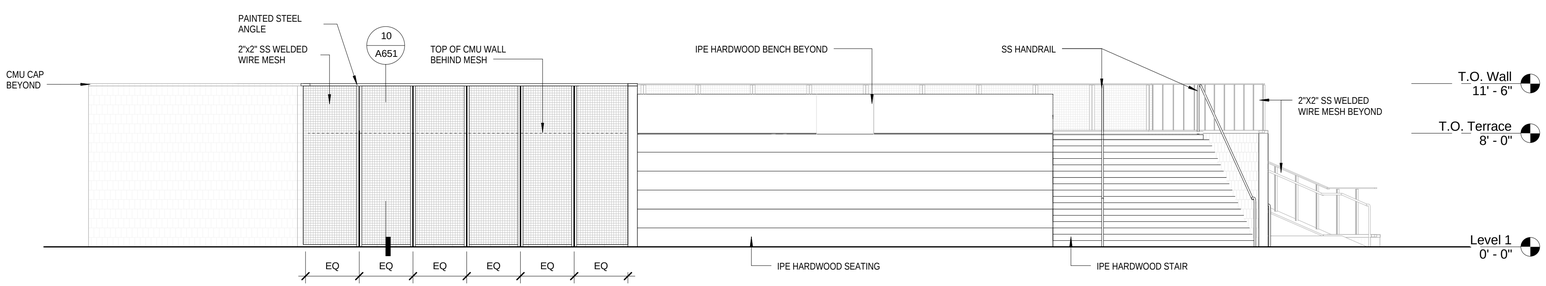

NORTH ELEVATION 1
3/16" = 1'-0"

05/03/13 PERMIT SET

SAN FRANCISCO OAKLAND BAY BRIDGE
EAST SPAN SEISMIC SAFETY PROJECT

IERBYS TEMPORARY IMPROVEMENTS - SITE

RAISED TERRACE ELEVATIONS — A350

QUINCY WONG
DESIGN OVERSIGHT
05/03/13
SIGN OFF DATE

	BY	CHECKED
DESIGN	COREY SCHURR	GREGORY BAKER
DETAILS		
QUANTITIES		

PREPARED FOR THE STATE OF CALIFORNIA DEPARTMENT OF TRANSPORTATION

KAREN Y. WANG
PROJECT ENGINEER

BRIDGE NO.
POST MILE 2.0

DESIGN GENERAL PLAN SHEET (ENGLISH) (REV. 06-01-09)

ORIGINAL SCALE IN INCHES FOR REDUCED PLANS 0 1 2 3

UNIT: 04
PROJECT NUMBER AND PHASE:
CONTRACT NO.: 0120F4

DISREGARD PRINTS BEARING EARLIER REVISION DATES

REVISION DATES — SHEET 15 OF 38

C:\Users\cschurr\Documents\56185_Gateway Park - Central_cschurr.rvt

5/2/2013 2:29:58 PM

DIST.	COUNTY	ROUTE	POST MILES TOTAL PROJECT	SHEET N0.	TOTAL SHEETS
04	Ala	80	2.0	1204ci	1204

REGISTERED ARCHITECT — DATE 05/03/13

PLANS APPROVAL DATE 05/03/13

LICENSED ARCHITECT — GREGORY P. BAKER — C-16884 — STATE OF CALIFORNIA — RENEWAL DATE 10.31.2013

The State of California or its officers or agents shall not be responsible for the accuracy or completeness of electronic copies of this plan sheet.

HNTB CORPORATION
1111 BROADWAY
9TH FLOOR
OAKLAND, CA 94607

HNTB Corporation Engineers Architects Planners

Caltrans now has a web site! To get to the web site, go to http://www/dot.ca.gov

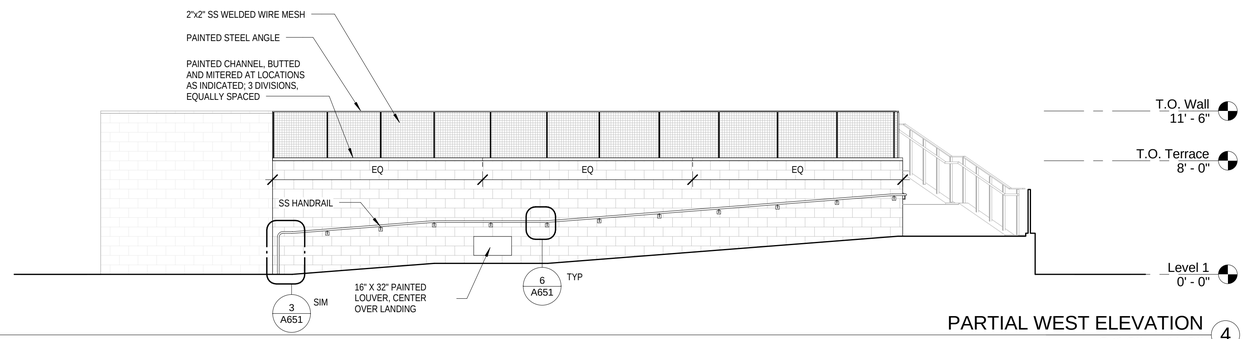

PARTIAL WEST ELEVATION 4
3/16" = 1'-0"

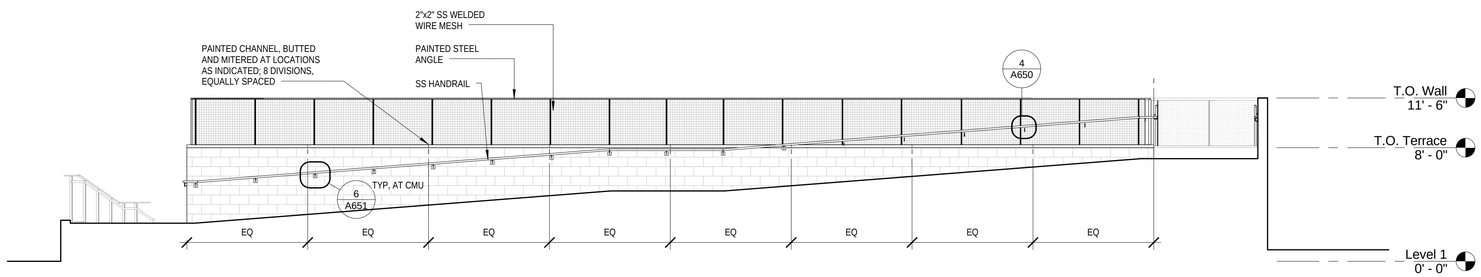

PARTIAL SOUTH ELEVATION 3
3/16" = 1'-0"

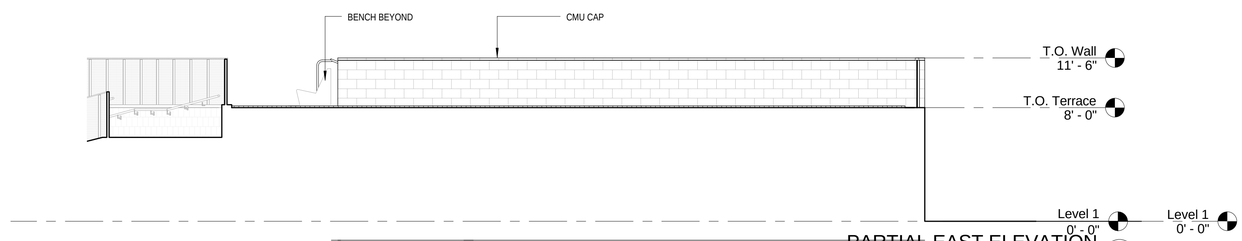

PARTIAL EAST ELEVATION 2
3/16" = 1'-0"

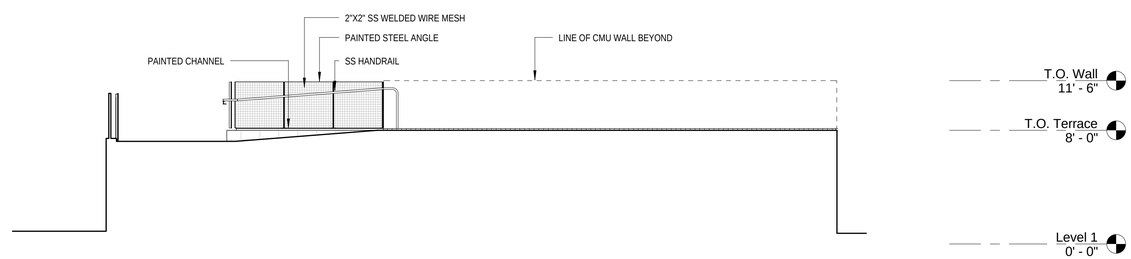

PARTIAL EAST ELEVATION 1
3/16" = 1'-0"

NOTE: BURNISHED CMU FACE ON ALL SIGHT EXPOSED FACES. LOCATE ALL OPENINGS IN CMU WITHIN BLOCK MODULE.

05/03/13 PERMIT SET

SAN FRANCISCO OAKLAND BAY BRIDGE EAST SPAN SEISMIC SAFETY PROJECT

IERBYS TEMPORARY IMPROVEMENTS - SITE

RAISED TERRACE PARTIAL ELEVATIONS

A351

QUINCY WONG
DESIGN OVERSIGHT
05/03/13
SIGN OFF DATE

	BY	CHECKED
DESIGN	COREY SCHURR	GREGORY BAKER
DETAILS		
QUANTITIES		

PREPARED FOR THE STATE OF CALIFORNIA DEPARTMENT OF TRANSPORTATION

KAREN Y. WANG
PROJECT ENGINEER

BRIDGE NO.
POST MILE 2.0

DESIGN GENERAL PLAN SHEET (ENGLISH) (REV. 06-01-09)

ORIGINAL SCALE IN INCHES FOR REDUCED PLANS 0 1 2 3

UNIT: 04
PROJECT NUMBER AND PHASE:
CONTRACT NO.: 0120F4

DISREGARD PRINTS BEARING EARLIER REVISION DATES

REVISION DATES

SHEET 16 OF 38

C:\Users\cschurr\Documents\56185_Gateway Park - Central_cschurr.rvt

5/2/2013 2:30:10 PM

DIST.	COUNTY	ROUTE	POST MILES TOTAL PROJECT	SHEET N0.	TOTAL SHEETS
04	Ala	80	2.0	1204cj	1204

REGISTERED ARCHITECT — DATE 05/03/13

PLANS APPROVAL DATE 05/03/13

LICENSED ARCHITECT — GREGORY P. BAKER — C-16884 — 10.31.2013 RENEWAL DATE — STATE OF CALIFORNIA

The State of California or its officers or agents shall not be responsible for the accuracy or completeness of electronic copies of this plan sheet.

HNTB CORPORATION
1111 BROADWAY
9TH FLOOR
OAKLAND, CA 94607

HNTB Corporation Engineers Architects Planners

Caltrans now has a web site! To get to the web site, go to http://www/dot.ca.gov

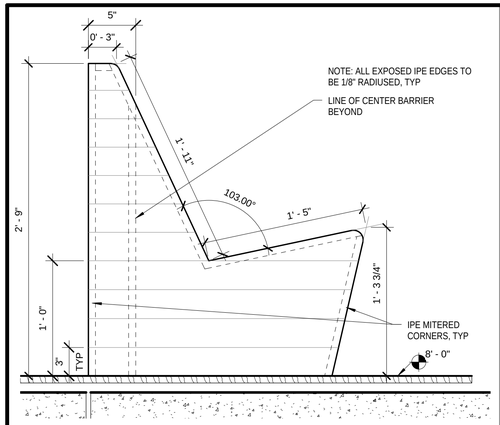

ENLARGED ELEVATION AT BENCH (8)
1 1/2" = 1'-0"

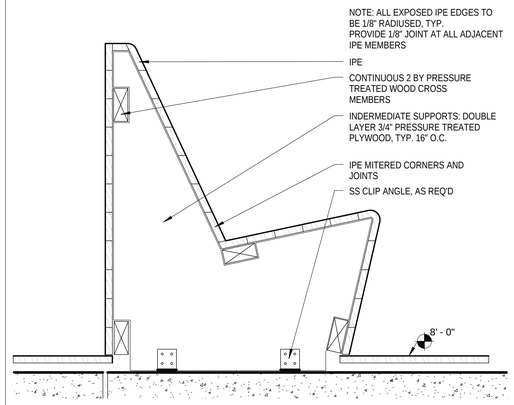

ENLARGED SECTION AT BENCH (5)
1 1/2" = 1'-0"

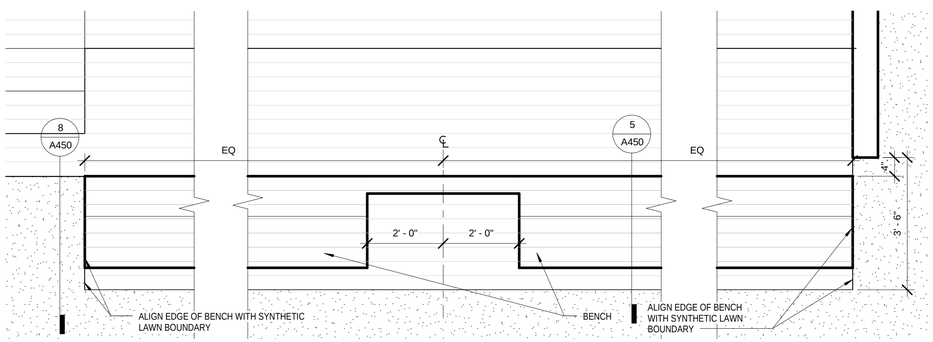

BENCH PLAN (4)
1/2" = 1'-0"

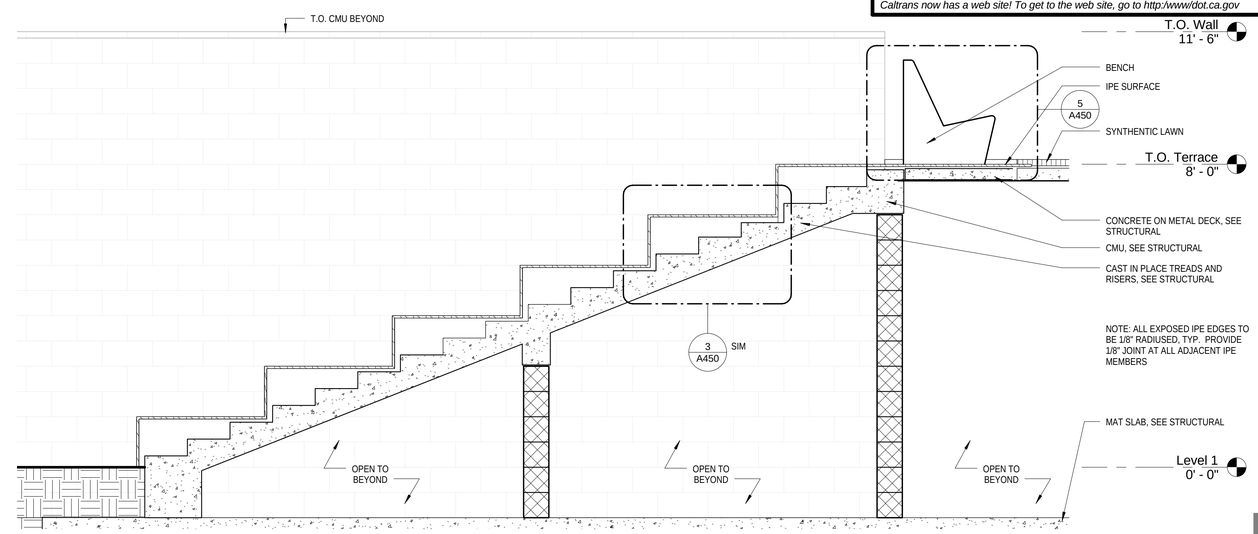

SECTION THROUGH STAIR (2)
1/2" = 1'-0"

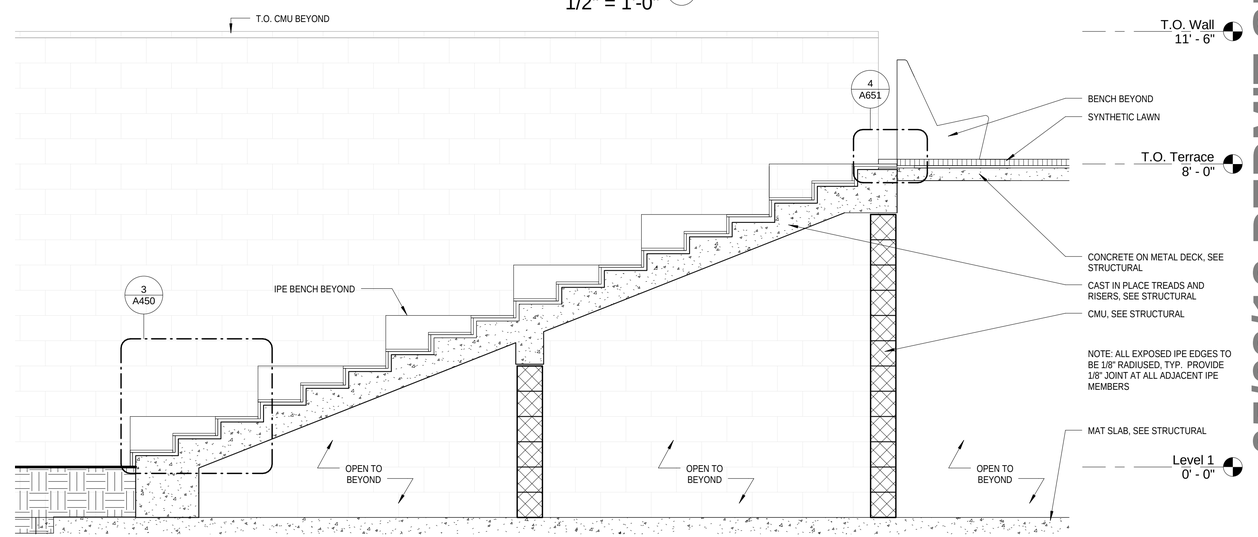

SECTION THROUGH STAIR (1)
1/2" = 1'-0"

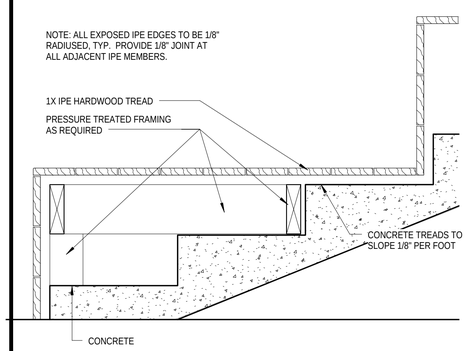

DETAIL AT SEATING (6)
1 1/2" = 1'-0"

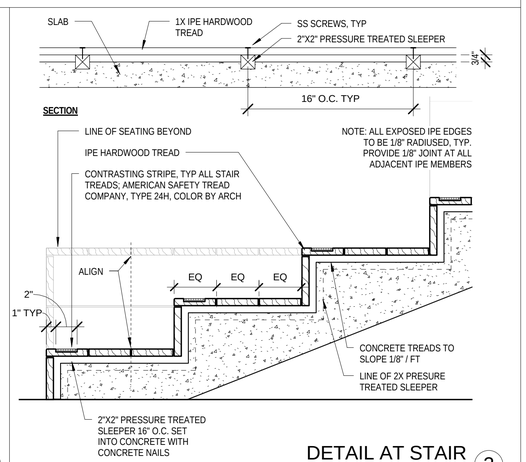

DETAIL AT STAIR (3)
1 1/2" = 1'-0"

05/03/13 PERMIT SET

SAN FRANCISCO OAKLAND BAY BRIDGE
EAST SPAN SEISMIC SAFETY PROJECT

IERBYS TEMPORARY IMPROVEMENTS - SITE

RAISED TERRACE SECTIONS

A450

QUINCY WONG
DESIGN OVERSIGHT
05/03/13
SIGN OFF DATE

	BY	CHECKED
DESIGN	COREY SCHURR	GREGORY BAKER
DETAILS		
QUANTITIES		

PREPARED FOR THE STATE OF CALIFORNIA DEPARTMENT OF TRANSPORTATION

KAREN Y. WANG
PROJECT ENGINEER

BRIDGE NO.
POST MILE 2.0

DESIGN GENERAL PLAN SHEET (ENGLISH) (REV. 06-01-09)

ORIGINAL SCALE IN INCHES FOR REDUCED PLANS 0 1 2 3

UNIT: 04
PROJECT NUMBER AND PHASE:
CONTRACT NO.: 0120F4

DISREGARD PRINTS BEARING EARLIER REVISION DATES

REVISION DATES

SHEET 17 OF 38

C:\Users\cschurr\Documents\56185_Gateway Park - Central_cschurr.rvt

5/2/2013 2:30:18 PM

DIST.	COUNTY	ROUTE	POST MILES TOTAL PROJECT	SHEET NO.	TOTAL SHEETS
04	Ala	80	2.0	1204ck	1204

REGISTERED ARCHITECT — DATE 05/03/13

LICENSED ARCHITECT — GREGORY P. BAKER — C-16884 — 10.31.2013 RENEWAL DATE — STATE OF CALIFORNIA

05/03/13
PLANS APPROVAL DATE

The State of California or its officers or agents shall not be responsible for the accuracy or completeness of electronic copies of this plan sheet.

HNTB CORPORATION
1111 BROADWAY
9TH FLOOR
OAKLAND, CA 94607

HNTB Corporation Engineers Architects Planners

Caltrans now has a web site! To get to the web site, go to http://www/dot.ca.gov

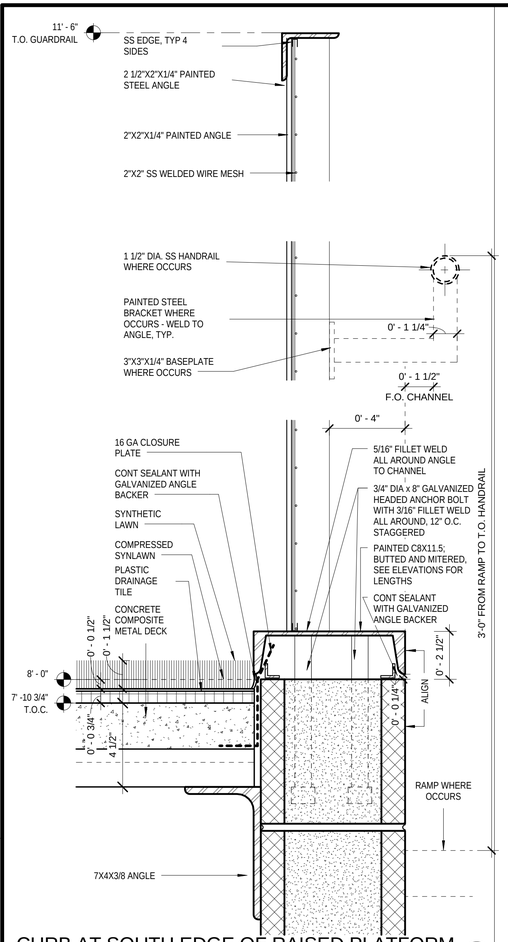

CURB AT SOUTH EDGE OF RAISED PLATFORM (14)
3" = 1'-0"

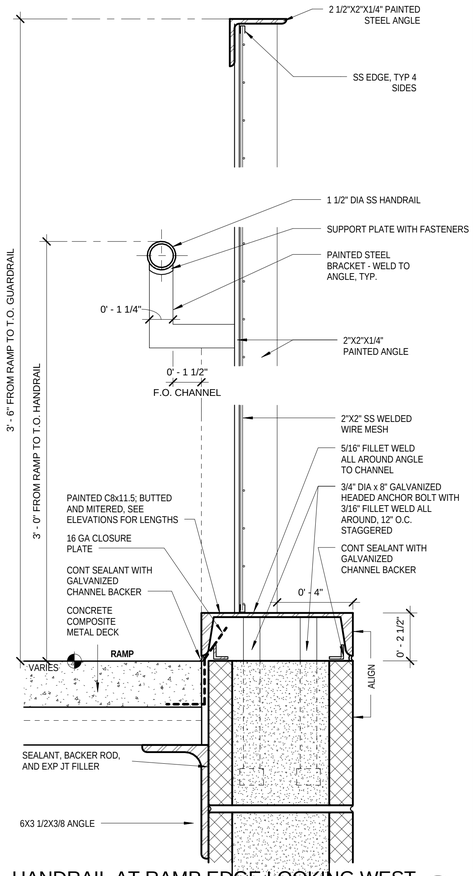

HANDRAIL AT RAMP EDGE LOOKING WEST (11)
3" = 1'-0"

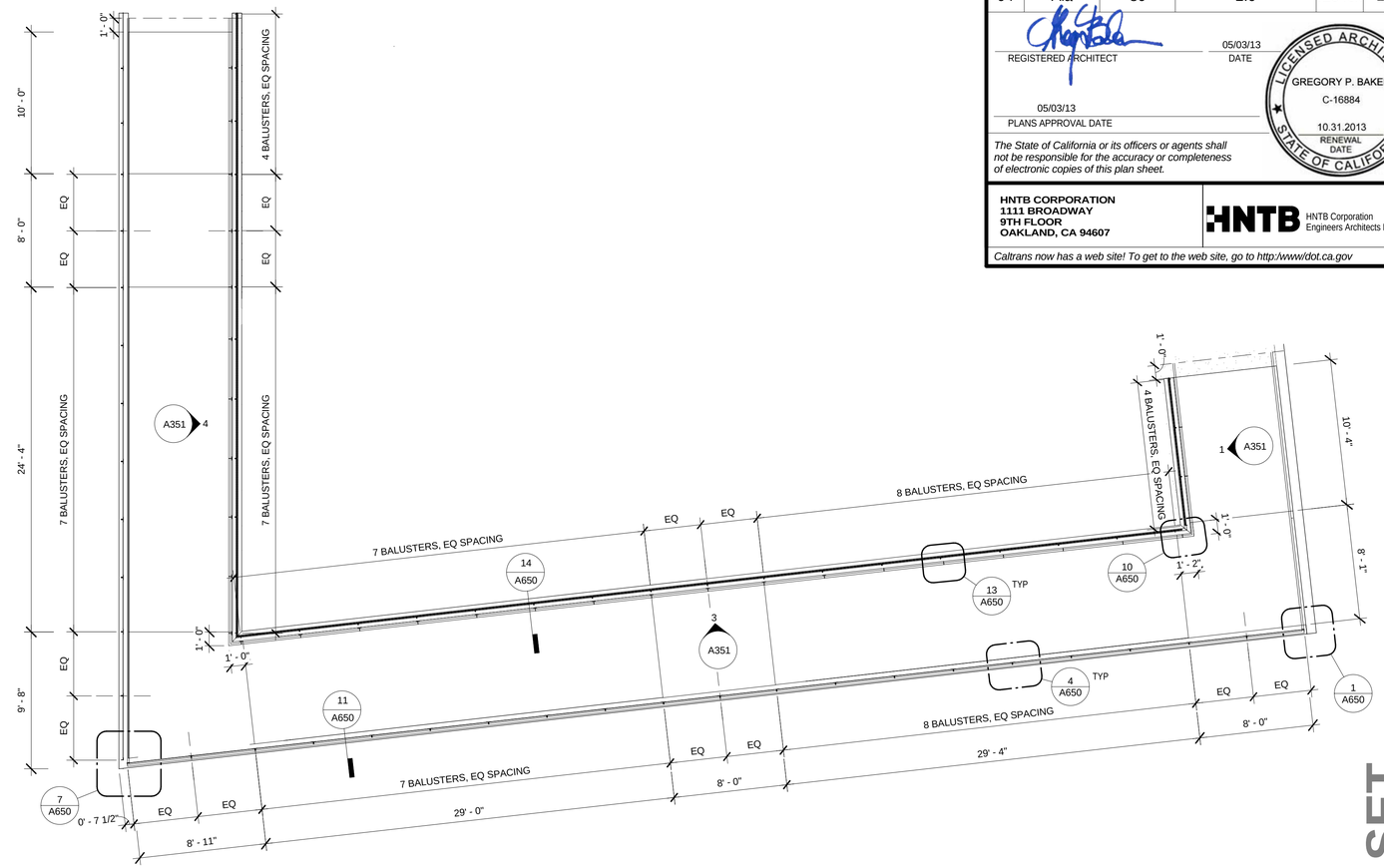

RAMP AT RAISED TERRACE (2)
3/16" = 1'-0"

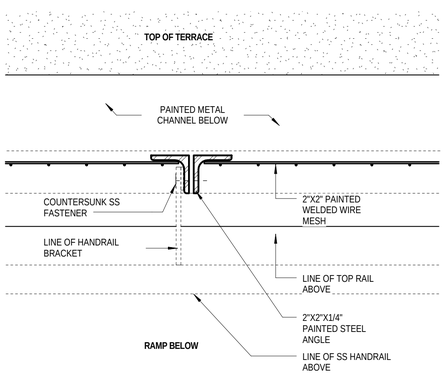

TYP. HANDRAIL VERTICAL AT BALUSTER (13)
3" = 1'-0"

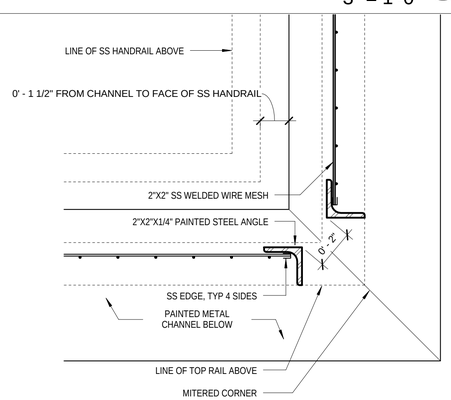

CORNER AT HANDRAIL - PLAN (10)
3" = 1'-0"

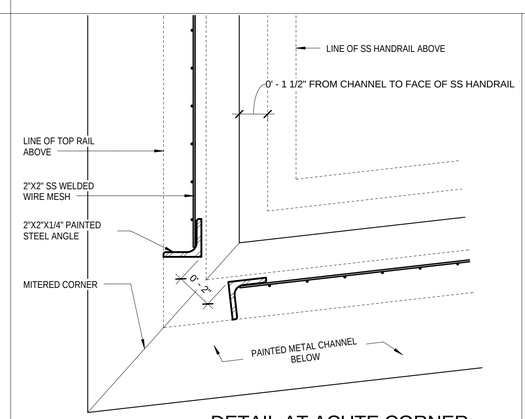

DETAIL AT ACUTE CORNER (7)
3" = 1'-0"

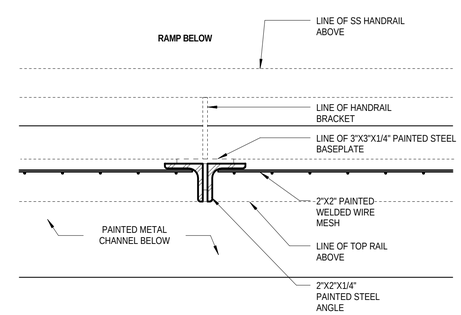

TYP. HANDRAIL VERTICAL (4)
3" = 1'-0"

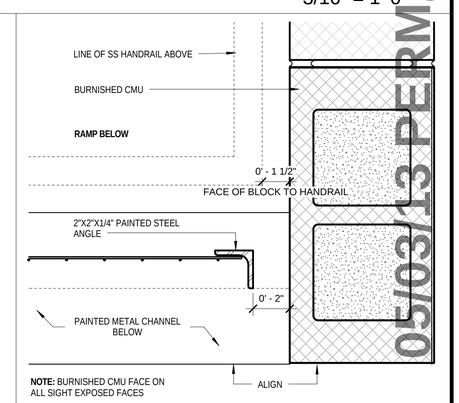

CORNER AT HANDRAIL AT CMU (1)
3" = 1'-0"

05/03/13 PERMIT SET

QUINCY WONG
DESIGN OVERSIGHT
05/03/13
SIGN OFF DATE

	BY	CHECKED
DESIGN	COREY SCHURR	GREGORY BAKER
DETAILS		
QUANTITIES		

PREPARED FOR THE STATE OF CALIFORNIA DEPARTMENT OF TRANSPORTATION

KAREN Y. WANG
PROJECT ENGINEER

BRIDGE NO.
POST MILE 2.0

SAN FRANCISCO OAKLAND BAY BRIDGE EAST SPAN SEISMIC SAFETY PROJECT

IERBYS TEMPORARY IMPROVEMENTS - SITE

RAISED TERRACE DETAILS

A650

DESIGN GENERAL PLAN SHEET (ENGLISH) (REV. 06-01-09)

ORIGINAL SCALE IN INCHES FOR REDUCED PLANS 0 1 2 3

UNIT: 04
PROJECT NUMBER AND PHASE:
CONTRACT NO.: 0120F4

DISREGARD PRINTS BEARING EARLIER REVISION DATES

REVISION DATES

SHEET 18 OF 38

C:\Users\cschurr\Documents\56185_Gateway Park - Central_cschurr.rvt

5/2/2013 2:30:25 PM

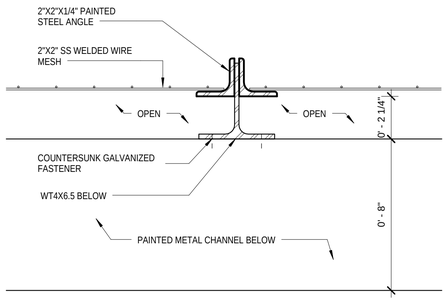

CONNECTION AT NORTH FACE - PLAN (12)
3" = 1'-0"

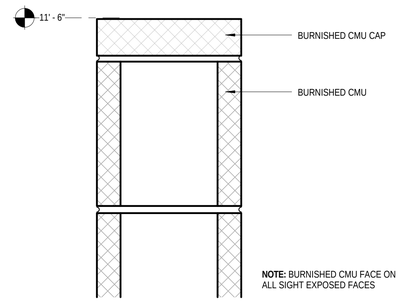

TOP CAP AT CMU (9)
3" = 1'-0"

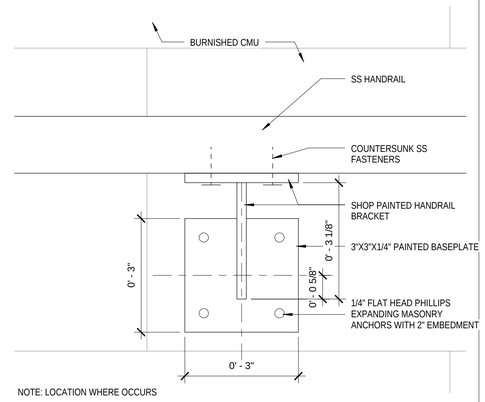

HANDRAIL BRACKET AT CMU (6)
6" = 1'-0"

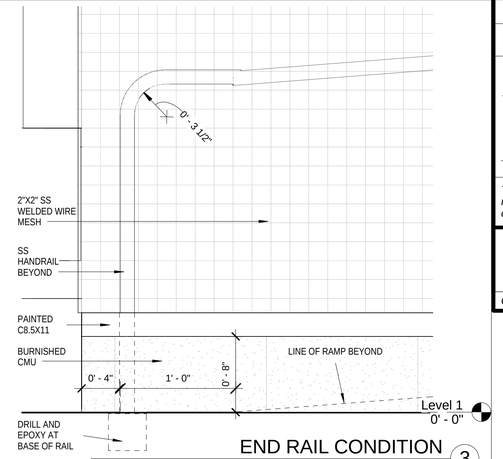

END RAIL CONDITION (3)
1 1/2" = 1'-0"

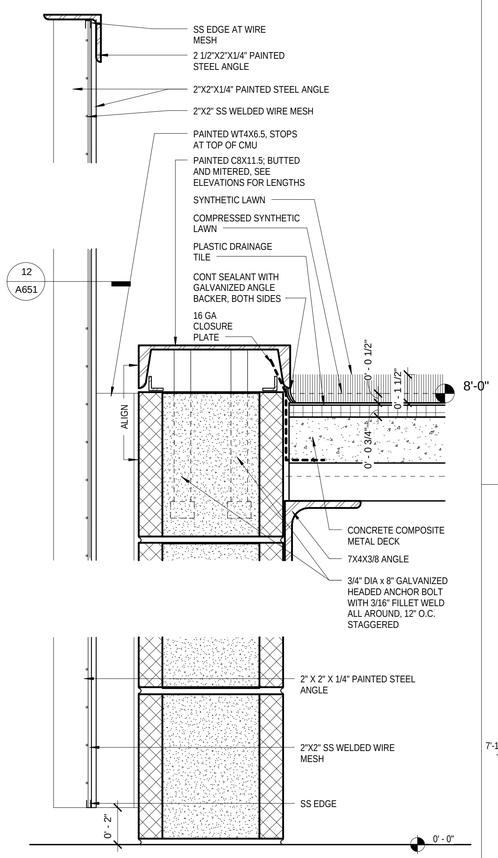

CURB AT NORTH FACE (10)
3" = 1'-0"

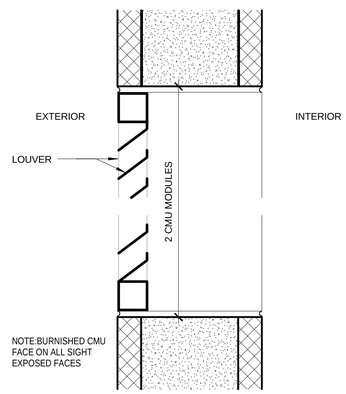

TYP LOUVER (8)
3" = 1'-0"

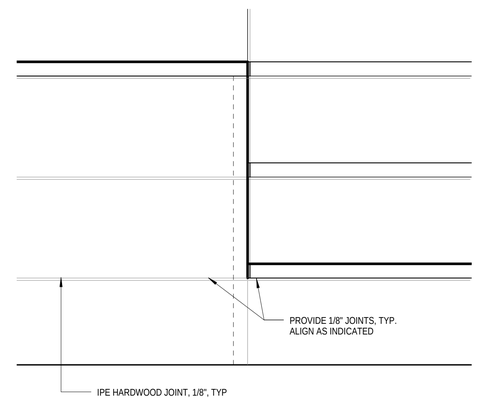

STAIR ELEVATION (5)
3" = 1'-0"

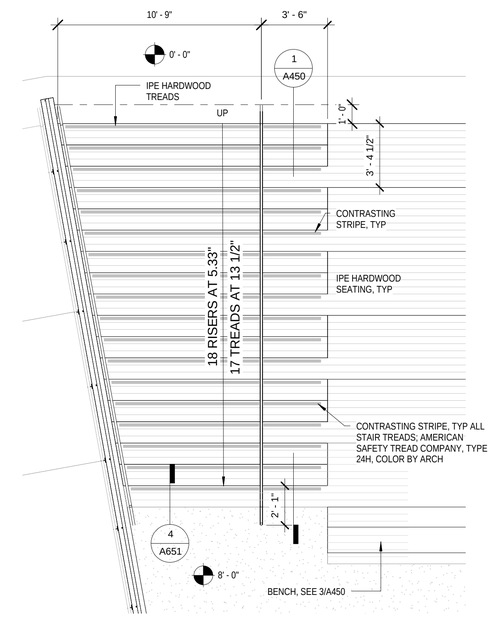

ENLARGED PLAN AT STAIR (1)
1/4" = 1'-0"

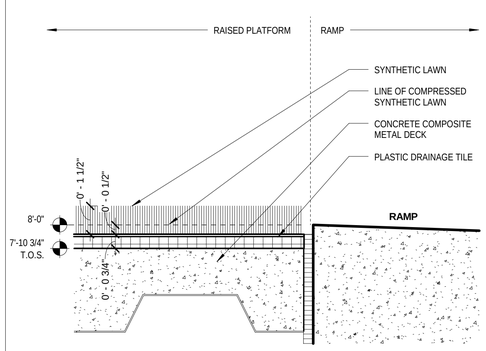

INTERSECTION AT TOP OF RAMP (7)
3" = 1'-0"

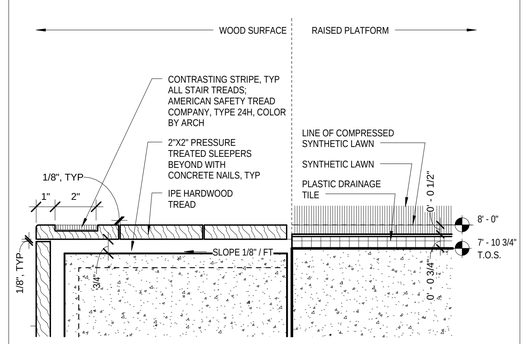

INTERSECTION AT TOP OF STAIR (4)
3" = 1'-0"

DIST.	COUNTY	ROUTE	POST MILES TOTAL PROJECT	SHEET N0.	TOTAL SHEETS
04	Ala	80	2.0	1204cl	1204

REGISTERED ARCHITECT — 05/03/13 DATE

05/03/13
PLANS APPROVAL DATE

LICENSED ARCHITECT — GREGORY P. BAKER — C-16884 — 10.31.2013 RENEWAL DATE — STATE OF CALIFORNIA

The State of California or its officers or agents shall not be responsible for the accuracy or completeness of electronic copies of this plan sheet.

HNTB CORPORATION
1111 BROADWAY
9TH FLOOR
OAKLAND, CA 94607

HNTB Corporation Engineers Architects Planners

Caltrans now has a web site! To get to the web site, go to http:/www/dot.ca.gov

05/03/13 PERMIT SET

SAN FRANCISCO OAKLAND BAY BRIDGE
EAST SPAN SEISMIC SAFETY PROJECT

IERBYS TEMPORARY IMPROVEMENTS - SITE

RAISED TERRACE DETAILS

A651

QUINCY WONG
DESIGN OVERSIGHT
05/03/13
SIGN OFF DATE

	BY	CHECKED
DESIGN	COREY SCHURR	GREGORY BAKER
DETAILS		
QUANTITIES		

PREPARED FOR THE STATE OF CALIFORNIA DEPARTMENT OF TRANSPORTATION

KAREN Y. WANG
PROJECT ENGINEER

BRIDGE NO.
POST MILE 2.0

DESIGN GENERAL PLAN SHEET (ENGLISH) (REV. 06-01-09)

ORIGINAL SCALE IN INCHES FOR REDUCED PLANS 0 1 2 3

UNIT: 04
PROJECT NUMBER AND PHASE:
CONTRACT NO.: 0120F4

DISREGARD PRINTS BEARING EARLIER REVISION DATES

REVISION DATES

SHEET 19 OF 38

C:\Users\cschurr\Documents\56185_Gateway Park - Central_cschurr.rvt

5/2/2013 2:30:35 PM

DIST.	COUNTY	ROUTE	POST MILES TOTAL PROJECT	SHEET N0.	TOTAL SHEETS
04	Ala	80	2.0	1204cm	1204

REGISTERED ARCHITECT — 05/03/13 DATE

05/03/13
PLANS APPROVAL DATE

LICENSED ARCHITECT
GREGORY P. BAKER
C-16884
10.31.2013
RENEWAL DATE
STATE OF CALIFORNIA

The State of California or its officers or agents shall not be responsible for the accuracy or completeness of electronic copies of this plan sheet.

HNTB CORPORATION
1111 BROADWAY
9TH FLOOR
OAKLAND, CA 94607

HNTB Corporation
Engineers Architects Planners

Caltrans now has a web site! To get to the web site, go to http:/www/dot.ca.gov

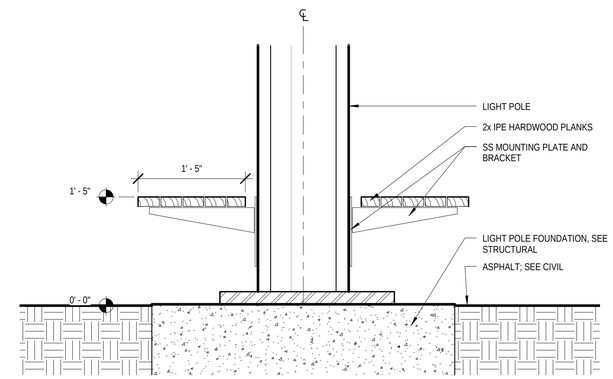

LIGHT POLE BASE - SECTION (2)
1" = 1'-0"

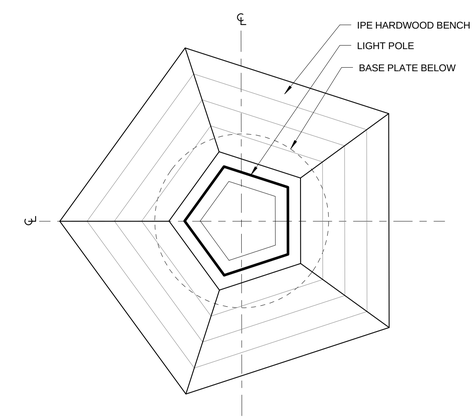

LIGHT POLE BASE (1)
1" = 1'-0"

05/03/13 PERMIT SET

SAN FRANCISCO OAKLAND BAY BRIDGE
EAST SPAN SEISMIC SAFETY PROJECT

IERBYS TEMPORARY IMPROVEMENTS - SITE

LIGHT POLE BASE

A655

QUINCY WONG
DESIGN OVERSIGHT
05/03/13
SIGN OFF DATE

	BY	CHECKED
DESIGN	COREY SCHURR	GREGORY BAKER
DETAILS		
QUANTITIES		

PREPARED FOR THE STATE OF CALIFORNIA DEPARTMENT OF TRANSPORTATION

KAREN Y. WANG
PROJECT ENGINEER

BRIDGE NO.
POST MILE 2.0

DESIGN GENERAL PLAN SHEET (ENGLISH) (REV. 06-01-09)

ORIGINAL SCALE IN INCHES FOR REDUCED PLANS 0 1 2 3

UNIT: 04
PROJECT NUMBER AND PHASE:
CONTRACT NO.: 0120F4

DISREGARD PRINTS BEARING EARLIER REVISION DATES

REVISION DATES ___ ___ ___ ___

SHEET 20 OF 38

5/2/2013 6:13:30 PM

C:\Users\cschurr\Documents\56185_Gateway Park - Central_cschurr.rvt

DIST.	COUNTY	ROUTE	POST MILES TOTAL PROJECT	SHEET N0.	TOTAL SHEETS
04	Ala	80	2.0	1204cn	1204

REGISTERED ENGINEER — 05/03/13 DATE

REGISTERED PROFESSIONAL ENGINEER — LAWRENCE M. JOHNSON — No. C 44006 — Exp. 6/30/2013 — CIVIL — STATE OF CALIFORNIA

05/03/13
PLANS APPROVAL DATE

The State of California or its officers or agents shall not be responsible for the accuracy or completeness of electronic copies of this plan sheet.

Parsons Brinckerhoff Inc.
303 Second Street, Suite 700N
San Francisco, CA 94107

Caltrans now has a web site! To get to the web site, go to http:/www/dot.ca.gov

A. GENERAL STRUCTURAL NOTES

1. ALL EXISTING CONDITIONS AND ASSOCIATED DIMENSIONS SHALL BE VERIFIED IN THE FIELD BY THE CONTRACTOR. THE CONTRACTOR SHALL IMMEDIATELY NOTIFY ENGINEER OF ANY DISCREPANCIES OR CONFLICTS BETWEEN EXISTING CONDITIONS AND DESIGN AND DETAILS INDICATED BY THESE DRAWINGS.
2. EMBEDDED ITEMS SUCH AS PIPES, INSERTS, SLEEVES AND CONDUITS, AND ANY RECESSES OR OPENINGS REQUIRED FOR UTILITY, ARCHITECTURAL, MECHANICAL AND ELECTRICAL INSTALLATIONS ARE NOT NECESSARILY SHOWN ON THE STRUCTURAL DRAWINGS. CONTRACTOR IS RESPONSIBLE FOR THE COORDINATION OF THE UTILITY, ARCHITECTURAL, MECHANICAL, ELECTRICAL CONTRACT/REFERENCE DRAWINGS AND FINAL CONSTRUCTION DRAWINGS FOR THE LOCATIONS AND DETAILS OF THESE ITEMS.
3. STRUCTURAL DESIGN IS IN ACCRODANCE WITH THE 2010 CALIFORNIA BUILDING CODE.
4. FOUNDATION:

   FOUNDATION DESIGN IS BASED ON GEOTECHNICAL ENGINEERING FOUNDATION REPORT PREPARED BY EARTH MECHANICAS, INC DATED MARCH, 2013

B. MASONRY

1. THE MASONRY UNITS SHALL BE PLACED IN A RUNNING BOND PATTERN.
2. ALL CMU ASSEMBLIES SHALL BE FULLY GROUTED AND SHALL BE CONSTRUCTED TO MEET OR EXCEED A 28 DAY COMPRESSSIVE STRESS (Fm) OF 1500 PSI (MIN).
3. MORTAR SHALL BE TYPE "S" FOR ALL MASONRY WALLS.
4. GROUT MIX FOR MASONRY SHALL PROVIDE A MINIMUM 28 DAY STRENGTH OF 2500 PSI.
5. SHORE ALL BOND BEAM MASONRY LINTELS UNTIL GROUT HAS REACHED THE MINIMUM SPECIFIED 28 DAY STRENGTH.
6. SPECIAL CONTINUOUS INSPECTION IS REQUIRED FOR ALL MASONRY WALLS.
7. PROVIDE STANDARD LADDER TYPE HORIZONTAL MASONRY JOINT REINFORCEMENT AT ALTERNATE COURSES (16"O.C. MAX).

C. CONCRETE

1. UNLESS OTHERWISE NOTED OR SPECIFIED, MINIMUM COMPRESSIVE CONCRETE STRENGTH AT 28 DAYS SHALL BE:

   f'c = 3000 psi : CONCRETE BACKFILL

   f'c = 3600 psi : FOUNDATION MAT SLAB
   FOUNDATION PIERS FOR LIGHT POLES
   CONCRETE COMPOSITE METAL DECK
   LIFT STATION FOOTINGS

   f'c = 4000 psi : STAIRS
   CMU WALL CONCRETE CAP
   LIFT STATION PRECAST CONCRETE SLAB
2. THE CONCRETE MIX SHALL CONSIST OF TYPE II MODIFIED CEMENT WITH A MINIMUM CEMENTITIOUS MATERIAL CONTENT OF 675 lb/cy. THE MAXIMUM WATER-TO-CEMENTITIOUS MATERIAL RATIO SHALL BE 0.4.
3. ALL REINFORCING BARS, ANCHOR BOLTS AND INSERTS TO BE WELL SECURED PRIOR TO POURING CONCRETE.
4. REFER TO ARCHITECTURAL, MECHANICAL, PLUMBING AND ELECTRICAL DRAWINGS FOR ADDITIOINAL ACCESSORIES AND INSERTS TO BE CAST IN CONCRETE.
5. FOUNDATION CONTRACTORS SHALL COORDINATE EMBEDS AND ANCHORAGES FOR OTHER WORK TO BE ATTACHED OR ANCHORED TO CAST IN PLACE FOUNDATION WITH APPROPRIATE CONTRACTORS.

D. REINFORCING STEEL

1. REINFORCING STEEL SHALL BE IN ACCORDANCE WITH ASTM A706 SPECIFICATIONS, GRADE 60.
2. FIELD WELDING, CUTTING OR BENDING OF REINFORCEMENT SHALL NOT BE ALLOWED UNLESS NOTED OTHERWISE OR UNLESS PRIOR APPROVAL IS OBTAINED FROM THE ENGINEER.
3. LAP BARS ONLY AT LOCATIONS SHOWN ON THE DRAWINGS, OR AS APPROVED IN ADVANCE BY THE ENGINEER.

E. STRUCTURAL STEEL

1. ALL STEEL SHALL MEET ASTM A992, GRADE 50. EXCEPT ANGLES AND PLATES SHALL MEET ASTM A36 UNLESS NOTED OTHERWISE.
2. WELDING - ALL WELDING SHALL BE IN ACCORDANCE WITH THE LATEST STRUCTURAL WELDING CODE AWS D1.1.
3. E70XX ELECTRODES SHALL BE USED FOR ALL WELDING.

F. METAL DECK

1. ALL STEEL FLOOR DECK UNITS SHALL BE 18 GA THICK WITH 2" RIB HEIGHT W2 FORMLOK BY VERCO DECKING, INC., OR APPROVED EQUAL. STEEL DECK TO BE GALVANIZED, G90 COATING.
2. UNLESS OTHERWISE NOTED ON DESIGN DRAWINGS, STEEL DECK UNITS SHALL BE FASTENED TO THE STEEL FRAMEWORK AT ENDS OF UNITS AND AT ALL INTERMEDIATE SUPPORTS BY 1/2" EFFECTIVE DIAMETER PUDDLE WELDS SPACED NOT MORE THAN 12 INCHES ACROSS THE WIDTH OF THE UNIT. WHERE TWO UNITS ABUT, EACH UNIT SHALL BE SO FASTENED TO THE STEEL FRAMING. BOUNDARY PUDDLE WELDS AT PERIMETER SUPPORTS SHALL BE 1/2" EFFECTIVE DIAMETER AT 12 INCHES MAXIMUM SPACING.
3. SEAM ATTACHMENT OR SIDELAPS OF ADJACENT UNITS SHALL BE DONE WITH 1 1/2" SIDE SEAM WELDS AT MAXIMUM SPACING OF 36" OC.
4. STEEL DECK UNITS SHALL HAVE CONTINUOUS SPAN OF 2 OR MORE, UNLESS NOTED OTHERWISE ON DRAWINGS.

05/03/13 PERMIT SET

Sean Samuel
DESIGN OVERSIGHT
05/03/13
SIGN OFF DATE

	BY	CHECKED
DESIGN	L. Johnson	
DETAILS	O. Kurnovskaya	L. Johnson
QUANTITIES		

PREPARED FOR THE STATE OF CALIFORNIA DEPARTMENT OF TRANSPORTATION

Brady Nadell
PROJECT ENGINEER

BRIDGE NO.
POST MILE 2.0

IERBYS TEMPORARY IMPROVEMENTS - SITE
STRUCTURAL GENERAL NOTES — S001

DESIGN GENERAL PLAN SHEET (ENGLISH) (REV. 06-01-09)

ORIGINAL SCALE IN INCHES FOR REDUCED PLANS 0 1 2 3

CU 04
EA 0120F4

DISREGARD PRINTS BEARING EARLIER REVISION DATES

REVISION DATES (PRELIMINARY STAGE ONLY) -

SHEET 21 OF 38

C:\Users\reyesl\Documents\130222_56185_Gateway Park_Structure_ReyesL.rvt

5/2/2013 11:52:51 AM

DIST.	COUNTY	ROUTE	POST MILES TOTAL PROJECT	SHEET N0.	TOTAL SHEETS
04	Ala	80	2.0	1204co	1204

REGISTERED ENGINEER 05/03/13 DATE

REGISTERED PROFESSIONAL ENGINEER LAWRENCE M. JOHNSON No. C 44006 Exp. 6/30/2013 CIVIL STATE OF CALIFORNIA

05/03/13
PLANS APPROVAL DATE

The State of California or its officers or agents shall not be responsible for the accuracy or completeness of electronic copies of this plan sheet.

Parsons Brinckerhoff Inc.
303 Second Street, Suite 700N
San Francisco, CA 94107

Caltrans now has a web site! To get to the web site, go to http://www/dot.ca.gov

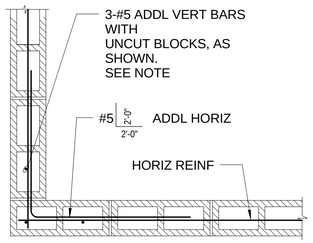

NOTE:

IF CUT BLOCK IS REQUIRED, PLACE AN ADDITIONAL #5 VERTICAL BAR IN THE REDUCED CORE OF THE CUT BLOCK.

CMU WALL CORNER - PLAN

SCALE: 1" = 1'-0"

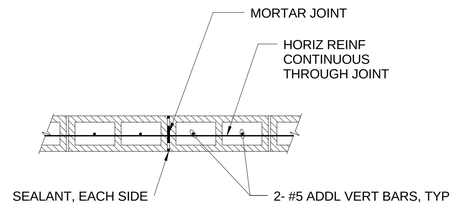

CMU WALL - CONTROL JOINT

SCALE: 1" = 1'-0"

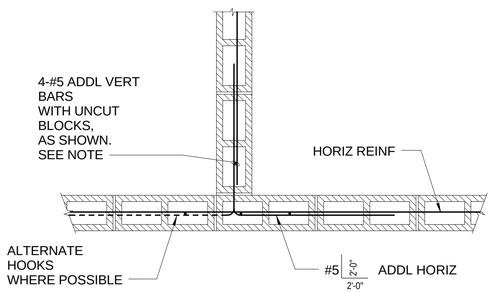

NOTE:

IF CUT BLOCK IS REQUIRED, PLACE AN ADDITIONAL #5 VERTICAL BAR IN THE REDUCED CORE OF THE CUT BLOCK.

CMU WALL INTERSECTION - PLAN

SCALE: 1" = 1'-0"

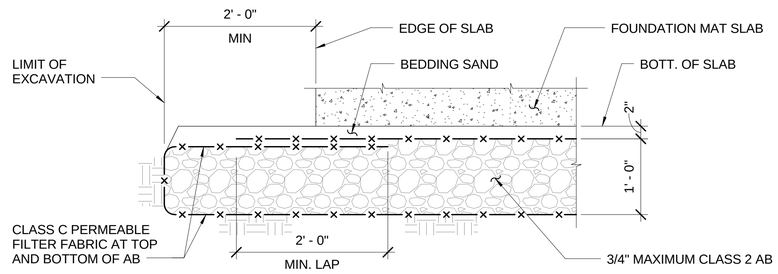

SUBGRADE AT FOUNDATION MAT DETAIL

SCALE: 1" = 1'-0"

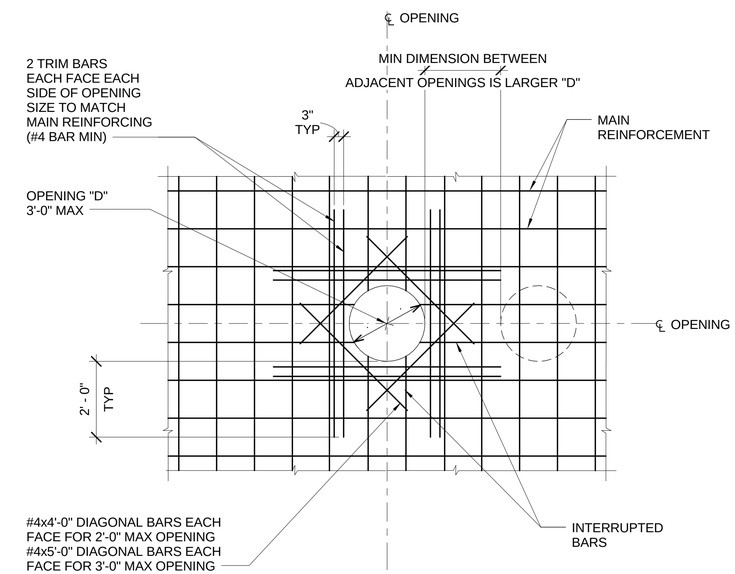

CIRCULAR FOUNDATION SLAB AND CONCRETE FLOOR METAL DECK OPENING DETAIL

SCALE: 1/2" = 1'-0"

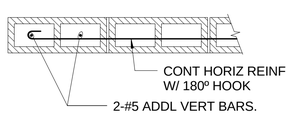

CMU WALL END

SCALE: 1" = 1'-0"

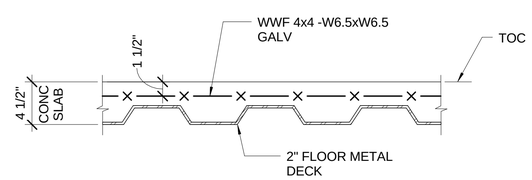

CONCRETE COMPOSITE FLOOR METAL DECK

SCALE: 1 1/2" = 1'-0"

05/03/13 PERMIT SET

Sean Samuel, DESIGN OVERSIGHT	DESIGN	BY L. Johnson	CHECKED
05/03/13, SIGN OFF DATE	DETAILS	BY O. Kurnovskaya	CHECKED L. Johnson
	QUANTITIES	BY	CHECKED

PREPARED FOR THE STATE OF CALIFORNIA DEPARTMENT OF TRANSPORTATION

Brady Nadell, PROJECT ENGINEER

BRIDGE NO.

POST MILE 2.0

IERBYS TEMPORARY IMPROVEMENTS - SITE

TYPICAL DETAILS NO. 1

S002

DESIGN GENERAL PLAN SHEET (ENGLISH) (REV. 06-01-09)

ORIGINAL SCALE IN INCHES FOR REDUCED PLANS 0 1 2 3

CU 04
EA 0120F4

DISREGARD PRINTS BEARING EARLIER REVISION DATES

REVISION DATES (PRELIMINARY STAGE ONLY)

SHEET 22 OF 38

5/2/2013 11:52:52 AM

C:\Users\reyesl\Documents\130222_56185_Gateway Park_Structure_ReyesL.rvt

DIST.	COUNTY	ROUTE	POST MILES TOTAL PROJECT	SHEET N0.	TOTAL SHEETS
04	Ala	80	2.0	1204cp	1204

REGISTERED ENGINEER 05/03/13 DATE

REGISTERED PROFESSIONAL ENGINEER LAWRENCE M. JOHNSON No. C 44006 Exp. 6/30/2013 CIVIL STATE OF CALIFORNIA

05/03/13
PLANS APPROVAL DATE

The State of California or its officers or agents shall not be responsible for the accuracy or completeness of electronic copies of this plan sheet.

Parsons Brinckerhoff Inc.
303 Second Street, Suite 700N
San Francisco, CA 94107

Caltrans now has a web site! To get to the web site, go to http://www/dot.ca.gov

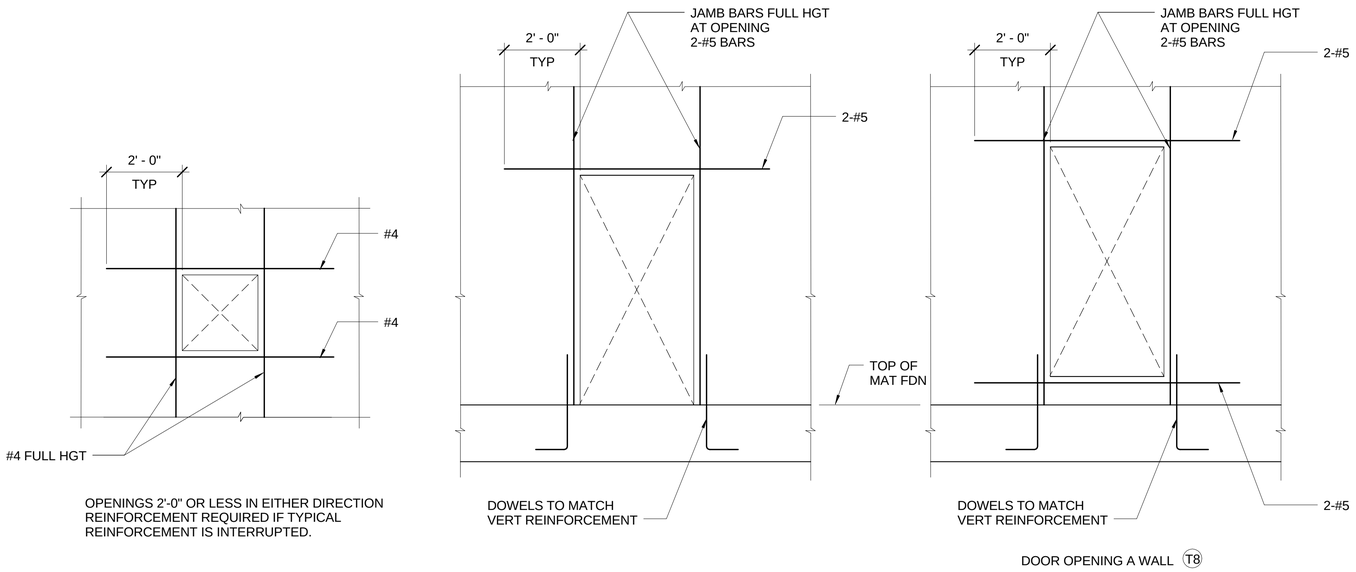

MASONRY WALL REINFORCEMENT AT OPENINGS

SCALE: 1/2" = 1'-0"

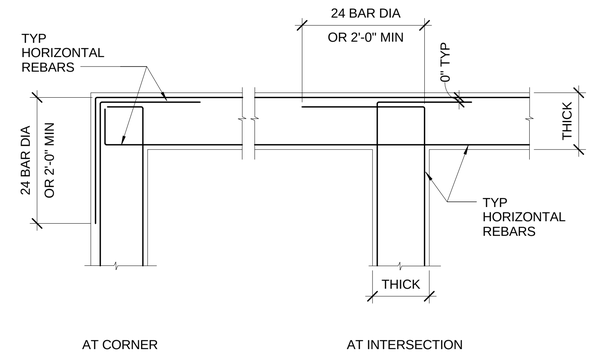

TYPICAL CONCRETE FOOTING AND CMU WALL CAP

SCALE: 1" = 1'-0"

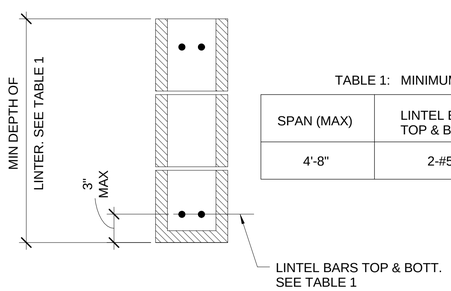

TABLE 1: MINIMUM LINTEL BARS UNO

SPAN (MAX)	LINTEL BARS TOP & BOTT	MIN DEPTH OF LINTEL IN INCHES
4'-8"	2-#5	24"

MASONRY LINTEL

SCALE: 1 1/2" = 1'-0"

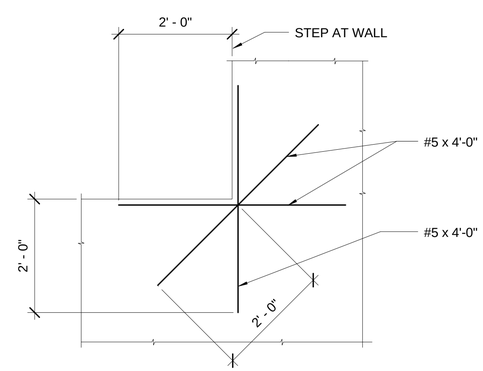

ADDITIONAL REINFORCING AT CONCRETE RE-ENTRANT CORNERS

SCALE: 3/4" = 1'-0"

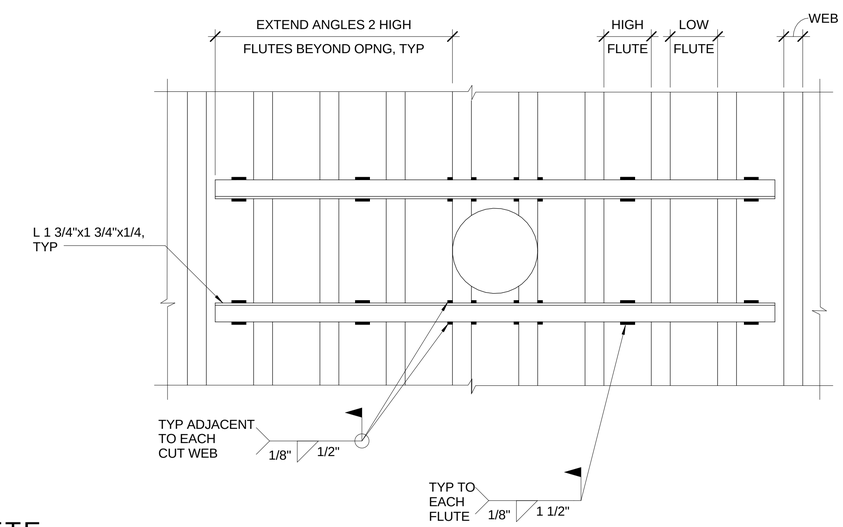

TYPICAL DECK OPENING REINFORCEMENT

SCALE: 1 1/2" = 1'-0"

05/03/13 PERMIT SET

Sean Samuel, DESIGN OVERSIGHT	DESIGN BY L. Johnson	CHECKED	PREPARED FOR THE STATE OF CALIFORNIA DEPARTMENT OF TRANSPORTATION
05/03/13, SIGN OFF DATE	DETAILS BY O. Kurnovskaya	CHECKED L. Johnson	
	QUANTITIES BY	CHECKED	

Brady Nadell, PROJECT ENGINEER

BRIDGE NO.

POST MILE 2.0

IERBYS TEMPORARY IMPROVEMENTS - SITE

TYPICAL DETAILS NO. 2

S003

DESIGN GENERAL PLAN SHEET (ENGLISH) (REV. 06-01-09)

ORIGINAL SCALE IN INCHES FOR REDUCED PLANS 0 1 2 3

CU 04
EA 0120F4

DISREGARD PRINTS BEARING EARLIER REVISION DATES

REVISION DATES (PRELIMINARY STAGE ONLY) -

SHEET 23 OF 38

C:\Users\reyesl\Documents\130222_56185_Gateway Park_Structure_ReyesL.rvt

5/2/2013 11:52:53 AM

DIST.	COUNTY	ROUTE	POST MILES TOTAL PROJECT	SHEET N0.	TOTAL SHEETS
04	Ala	80	2.0	1204cq	1204

REGISTERED ENGINEER 05/03/13 DATE

REGISTERED PROFESSIONAL ENGINEER LAWRENCE M. JOHNSON No. C 44006 Exp. 6/30/2013 CIVIL STATE OF CALIFORNIA

05/03/13
PLANS APPROVAL DATE

The State of California or its officers or agents shall not be responsible for the accuracy or completeness of electronic copies of this plan sheet.

Parsons Brinckerhoff Inc.
303 Second Street, Suite 700N
San Francisco, CA 94107

Caltrans now has a web site! To get to the web site, go to http://www/dot.ca.gov

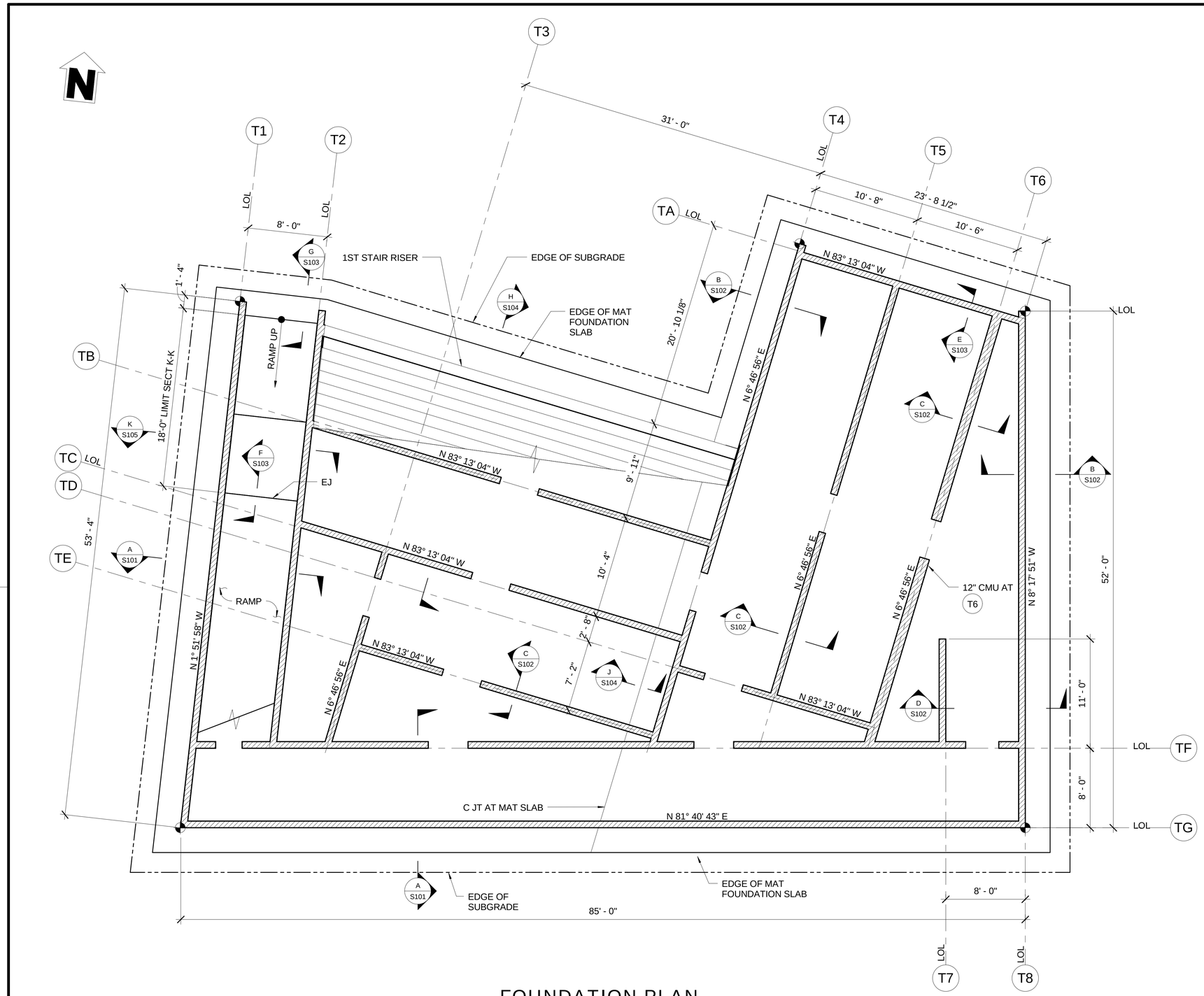

FOUNDATION PLAN

SCALE: 3/16" = 1'-0"

NOTES:

1. FOR LOCATION AND SIZE OF CMU WALL OPENINGS NOT NOTED OR SHOWN ON THE STRUCTURAL DRAWINGS, SEE ARCHITECTURAL DRAWINGS.
2. FOR REINFORCEMENT AT CMU WALL OPENINGS, SEE DRAWING S002.
3. FOR GENERAL NOTES AND TYPICAL DETAILS, SEE DRAWINGS S001 THRU S003.

LEGEND:

8" CMU WALL (UNO)

WORKPOINT. SEE CIVIL DRAWINGS

05/03/13 PERMIT SET

Sean Samuel
DESIGN OVERSIGHT
05/03/13
SIGN OFF DATE

	BY	CHECKED
DESIGN	L. Johnson	
DETAILS	L. Reyes	L. Johnson
QUANTITIES		

PREPARED FOR THE STATE OF CALIFORNIA DEPARTMENT OF TRANSPORTATION

Brady Nadell
PROJECT ENGINEER

BRIDGE NO.
POST MILE 2.0

IERBYS TEMPORARY IMPROVEMENTS - SITE

TERRACE FOUNDATION PLAN S004

DESIGN GENERAL PLAN SHEET (ENGLISH) (REV. 06-01-09)

ORIGINAL SCALE IN INCHES FOR REDUCED PLANS 0 1 2 3

CU 04
EA 0120F4

DISREGARD PRINTS BEARING EARLIER REVISION DATES

REVISION DATES (PRELIMINARY STAGE ONLY)

SHEET 24 OF 38

C:\Users\reyesl\Documents\130222_56185_Gateway Park_Structure_ReyesL.rvt

5/2/2013 11:52:54 AM

DIST.	COUNTY	ROUTE	POST MILES TOTAL PROJECT	SHEET N0.	TOTAL SHEETS
04	Ala	80	2.0	1204cr	1204

REGISTERED ENGINEER 05/03/13 DATE

05/03/13
PLANS APPROVAL DATE

REGISTERED PROFESSIONAL ENGINEER
LAWRENCE M. JOHNSON
No. C 44006
Exp. 6/30/2013
CIVIL
STATE OF CALIFORNIA

The State of California or its officers or agents shall not be responsible for the accuracy or completeness of electronic copies of this plan sheet.

Parsons Brinckerhoff Inc.
303 Second Street, Suite 700N
San Francisco, CA 94107

Caltrans now has a web site! To get to the web site, go to http://www/dot.ca.gov

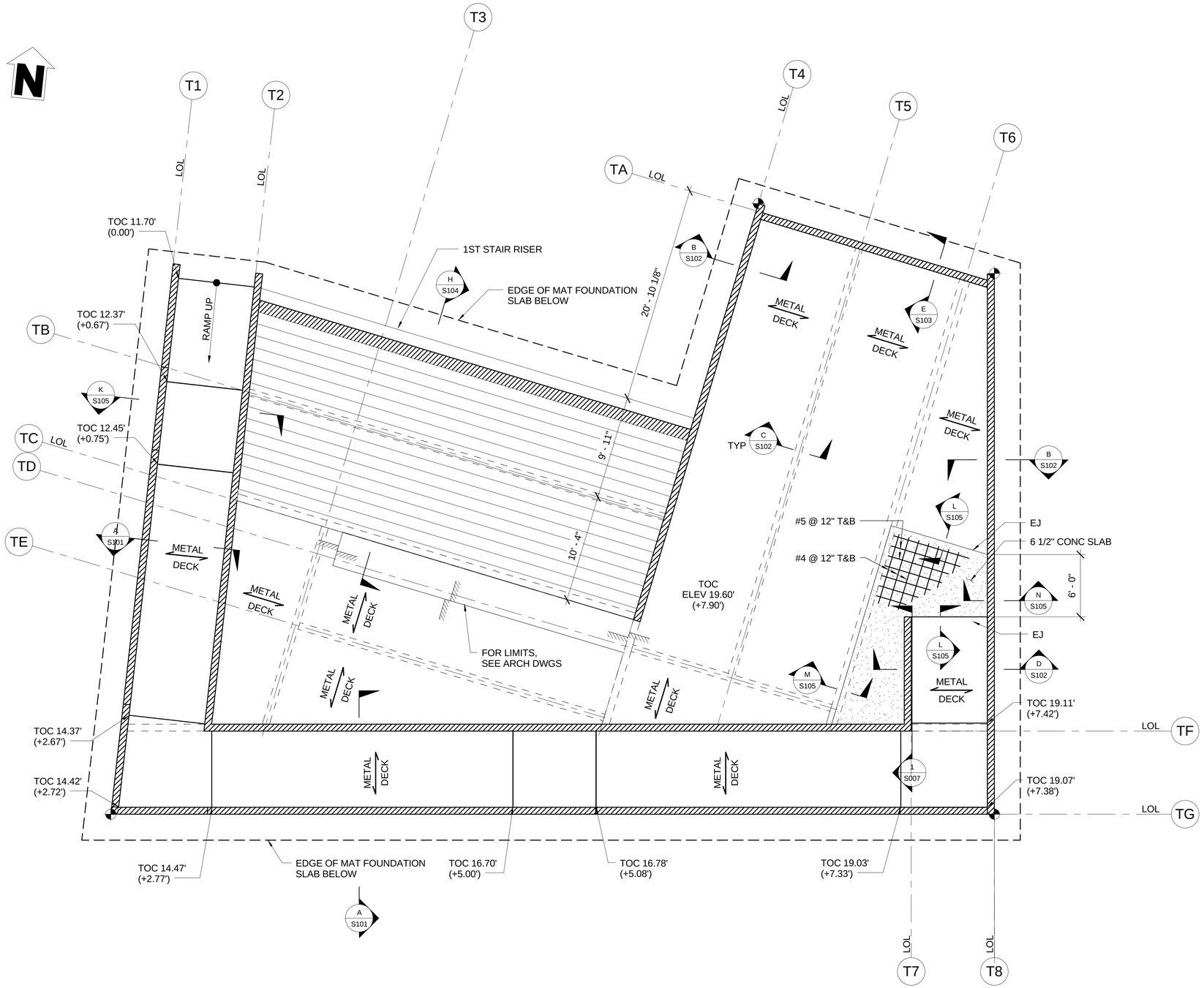

FLOOR PLAN

SCALE: 3/16" = 1'-0"

NOTES:

1. FOR LOCATION AND SIZE OF CMU WALL OPENINGS NOT NOTED OR SHOWN ON THE STRUCTURAL DRAWINGS, SEE ARCHITECTURAL DRAWINGS.
2. FOR REINFORCEMENT AT CMU WALL OPENINGS, SEE DRAWING S002.
3. FOR GENERAL NOTES AND TYPICAL DETAILS, SEE DRAWINGS S001 THRU S003.

LEGEND:

- 8" CMU WALL (UNO)
- WORKPOINT. SEE CIVIL DRAWINGS
- 1/8" DROP IN FLOOR ELEVATION

05/03/13 PERMIT SET

Sean Samuel
DESIGN OVERSIGHT
05/03/13
SIGN OFF DATE

	BY	CHECKED
DESIGN	L. Johnson	
DETAILS	L. Reyes	L. Johnson
QUANTITIES		

PREPARED FOR THE STATE OF CALIFORNIA DEPARTMENT OF TRANSPORTATION

Brady Nadell
PROJECT ENGINEER

BRIDGE NO.
POST MILE 2.0

IERBYS TEMPORARY IMPROVEMENTS - SITE
TERRACE FLOOR PLAN
S005

DESIGN GENERAL PLAN SHEET (ENGLISH) (REV. 06-01-09)

ORIGINAL SCALE IN INCHES FOR REDUCED PLANS 0 1 2 3

CU 04
EA 0120F4

DISREGARD PRINTS BEARING EARLIER REVISION DATES

REVISION DATES (PRELIMINARY STAGE ONLY)

SHEET 25 OF 38

C:\Users\reyesl\Documents\130222_56185_Gateway Park_Structure_ReyesL.rvt

5/2/2013 11:52:56 AM

DIST.	COUNTY	ROUTE	POST MILES TOTAL PROJECT	SHEET N0.	TOTAL SHEETS
04	Ala	80	2.0	1204cs	1204

REGISTERED ENGINEER 05/03/13 DATE

REGISTERED PROFESSIONAL ENGINEER LAWRENCE M. JOHNSON No. C 44006 Exp. 6/30/2013 CIVIL STATE OF CALIFORNIA

05/03/13
PLANS APPROVAL DATE

The State of California or its officers or agents shall not be responsible for the accuracy or completeness of electronic copies of this plan sheet.

Parsons Brinckerhoff Inc.
303 Second Street, Suite 700N
San Francisco, CA 94107

Caltrans now has a web site! To get to the web site, go to http://www/dot.ca.gov

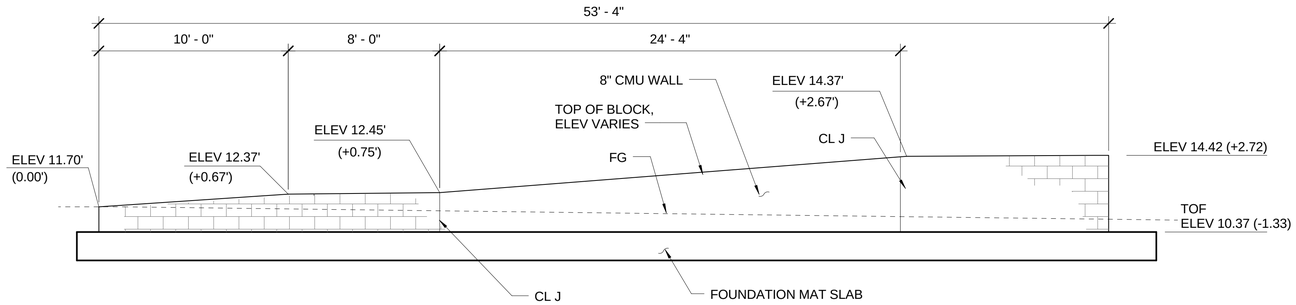

WALL T1

SCALE: 1/4" = 1'-0"

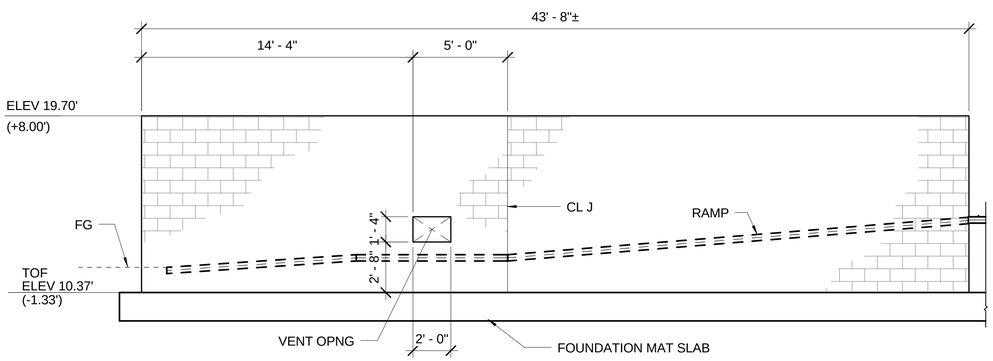

WALL T2

SCALE: 1/4" = 1'-0"

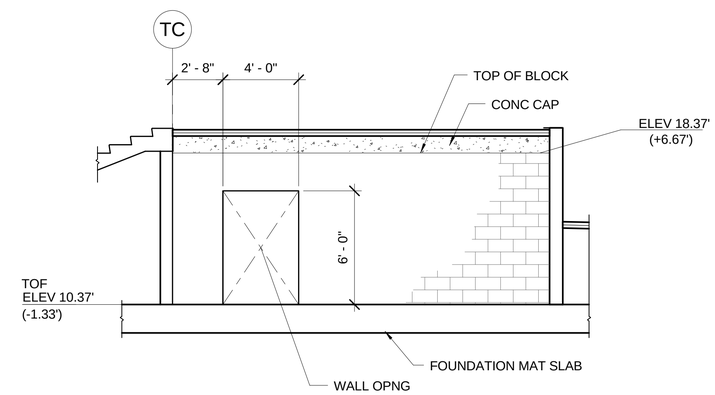

WALL T3

SCALE: 1/4" = 1'-0"

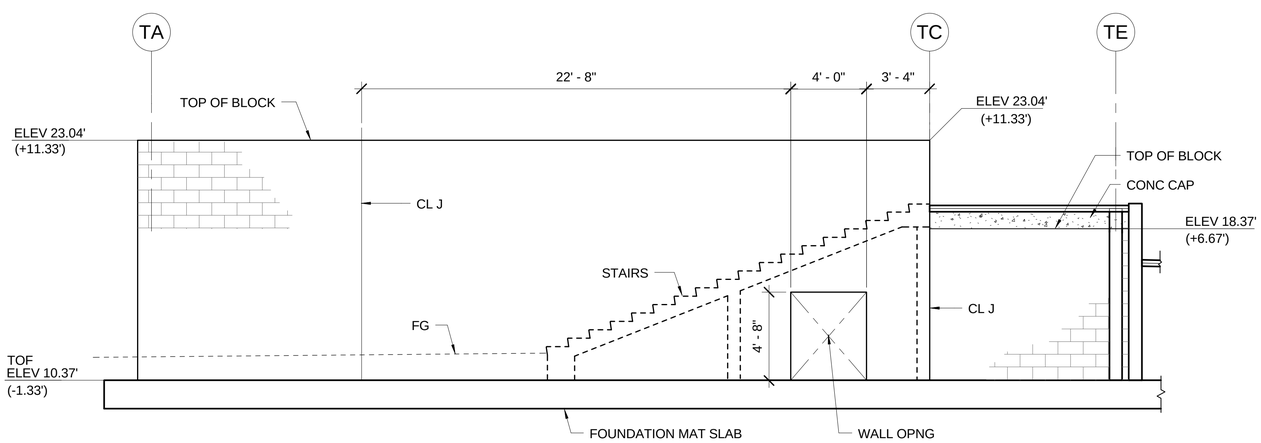

WALL T4

SCALE: 1/4" = 1'-0"

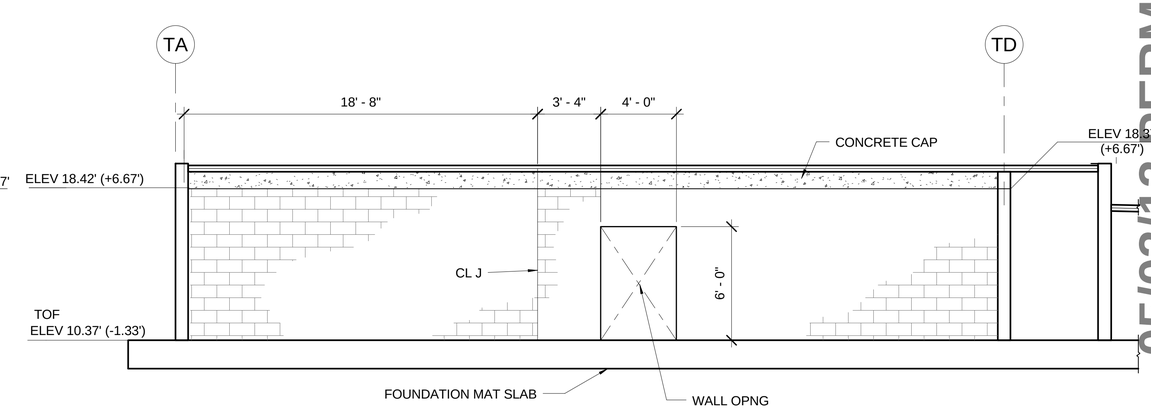

WALL T5

SCALE: 1/4" = 1'-0"

NOTES:

1. FOR CONTROL JOINT DETAIL AT MASONRY WALL. SEE "CMU WALL - CONTROL JOINT" ON DRAWING S002.

ABBREVIATIONS:

CL J CONTROL JOINT

05/03/13 PERMIT SET

Sean Samuel
DESIGN OVERSIGHT
05/03/13
SIGN OFF DATE

	BY	CHECKED
DESIGN	L. Johnson	
DETAILS	L. Reyes	L. Johnson
QUANTITIES		

PREPARED FOR THE STATE OF CALIFORNIA DEPARTMENT OF TRANSPORTATION

Brady Nadell
PROJECT ENGINEER

BRIDGE NO.
POST MILE 2.0

IERBYS TEMPORARY IMPROVEMENTS - SITE

WALL ELEVATIONS 1

S006

DESIGN GENERAL PLAN SHEET (ENGLISH) (REV. 06-01-09)

ORIGINAL SCALE IN INCHES FOR REDUCED PLANS 0 1 2 3

CU 04
EA 0120F4

DISREGARD PRINTS BEARING EARLIER REVISION DATES

REVISION DATES (PRELIMINARY STAGE ONLY)

SHEET 26 OF 38

C:\Users\reyesl\Documents\130222_56185_Gateway Park_Structure_ReyesL.rvt

5/2/2013 11:52:57 AM

DIST.	COUNTY	ROUTE	POST MILES TOTAL PROJECT	SHEET NO.	TOTAL SHEETS
04	Ala	80	2.0	1204ct	1204

REGISTERED ENGINEER 05/03/13 DATE

REGISTERED PROFESSIONAL ENGINEER LAWRENCE M. JOHNSON No. C 44006 Exp. 6/30/2013 CIVIL STATE OF CALIFORNIA

05/03/13
PLANS APPROVAL DATE

The State of California or its officers or agents shall not be responsible for the accuracy or completeness of electronic copies of this plan sheet.

Parsons Brinckerhoff Inc.
303 Second Street, Suite 700N
San Francisco, CA 94107

Caltrans now has a web site! To get to the web site, go to http://www/dot.ca.gov

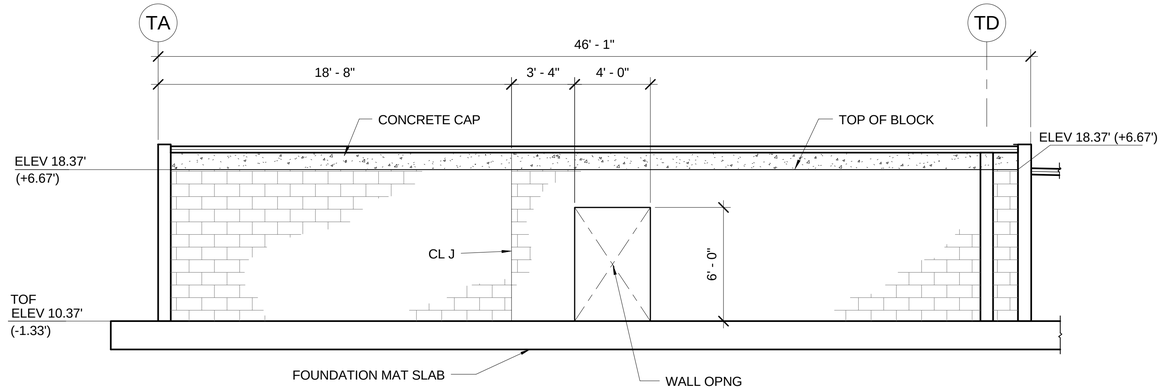

WALL T6
SCALE: 1/4" = 1'-0"

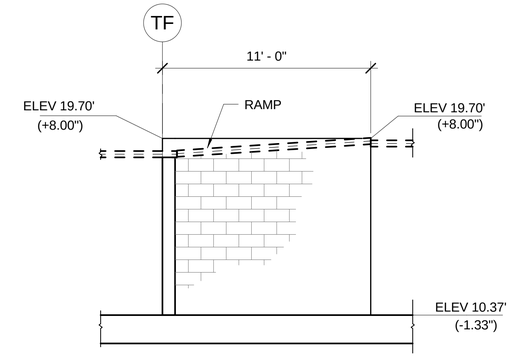

WALL T7
SCALE: 1/4" = 1'-0"

NOTES:

1. FOR NOTES AND ABBREVIATIONS, SEE DRAWING S006.

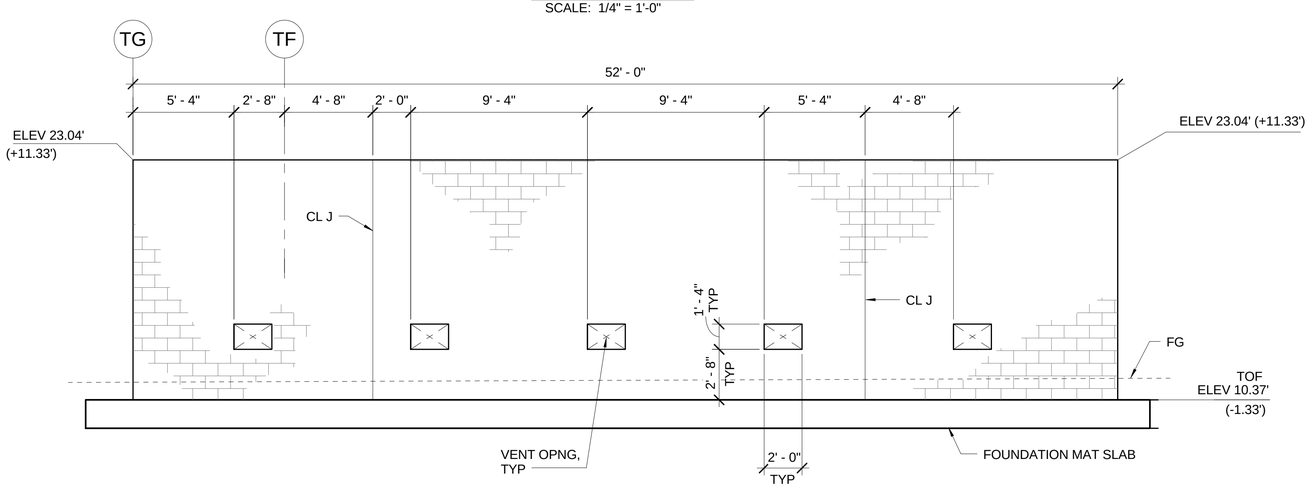

WALL T8
SCALE: 1/4" = 1'-0"

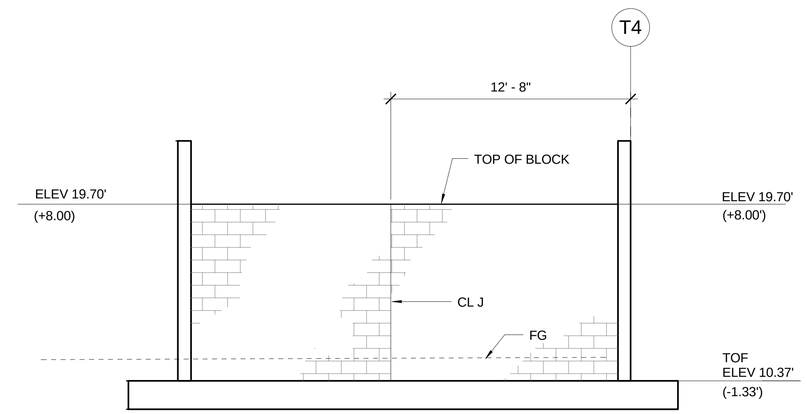

WALL TA
SCALE: 1/4" = 1'-0"

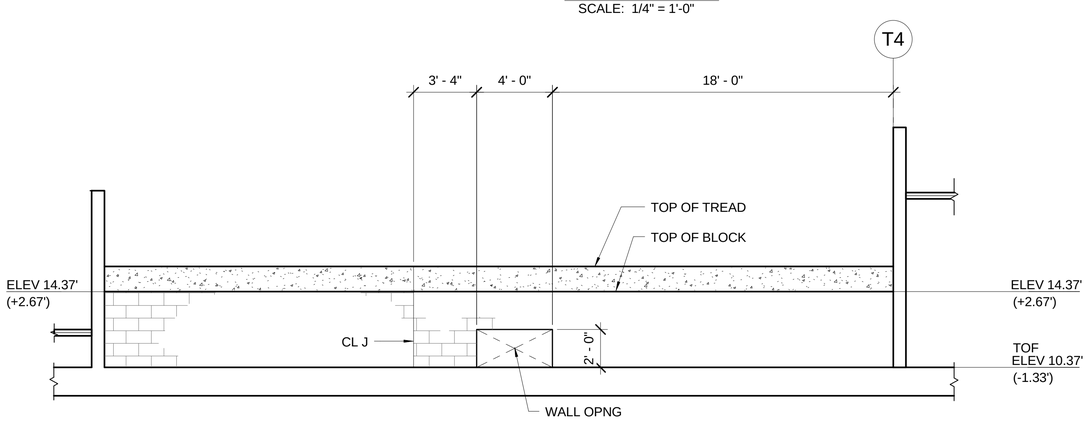

WALL TB
SCALE: 1/4" = 1'-0"

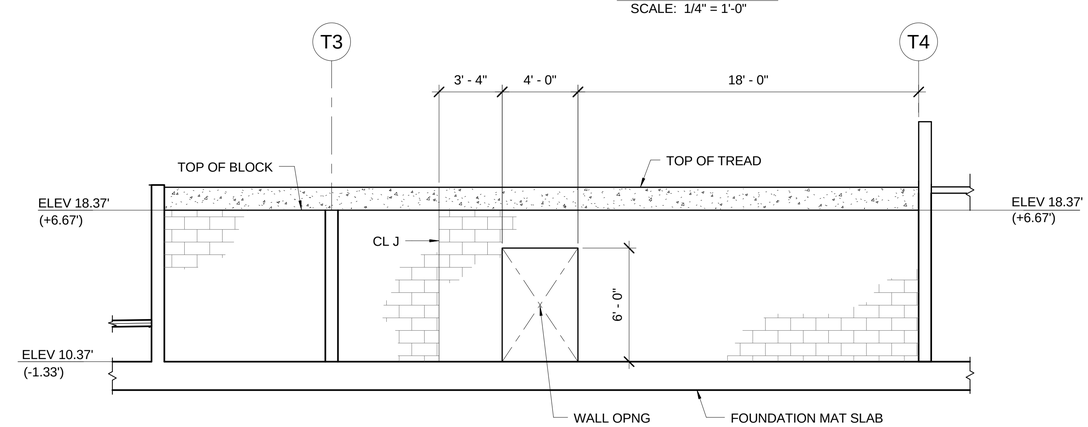

WALL TC
SCALE: 1/4" = 1'-0"

05/03/13 PERMIT SET

Sean Samuel DESIGN OVERSIGHT 05/03/13 SIGN OFF DATE	DESIGN BY L. Johnson CHECKED DETAILS BY L. Reyes CHECKED L. Johnson QUANTITIES BY CHECKED	PREPARED FOR THE STATE OF CALIFORNIA DEPARTMENT OF TRANSPORTATION	Brady Nadell PROJECT ENGINEER

BRIDGE NO.
POST MILE 2.0

IERBYS TEMPORARY IMPROVEMENTS - SITE
WALL ELEVATIONS 2
S007

DESIGN GENERAL PLAN SHEET (ENGLISH) (REV. 06-01-09)

ORIGINAL SCALE IN INCHES FOR REDUCED PLANS 0 1 2 3

CU 04
EA 0120F4

DISREGARD PRINTS BEARING EARLIER REVISION DATES

REVISION DATES (PRELIMINARY STAGE ONLY) -

SHEET 27 OF 38

C:\Users\reyesl\Documents\130222_56185_Gateway Park_Structure_ReyesL.rvt

5/2/2013 11:52:58 AM

DIST.	COUNTY	ROUTE	POST MILES TOTAL PROJECT	SHEET N0.	TOTAL SHEETS
04	Ala	80	2.0	1204cu	1204

REGISTERED ENGINEER 05/03/13 DATE

REGISTERED PROFESSIONAL ENGINEER LAWRENCE M. JOHNSON No. C 44006 Exp. 6/30/2013 CIVIL STATE OF CALIFORNIA

05/03/13
PLANS APPROVAL DATE

The State of California or its officers or agents shall not be responsible for the accuracy or completeness of electronic copies of this plan sheet.

Parsons Brinckerhoff Inc.
303 Second Street, Suite 700N
San Francisco, CA 94107

Caltrans now has a web site! To get to the web site, go to http://www/dot.ca.gov

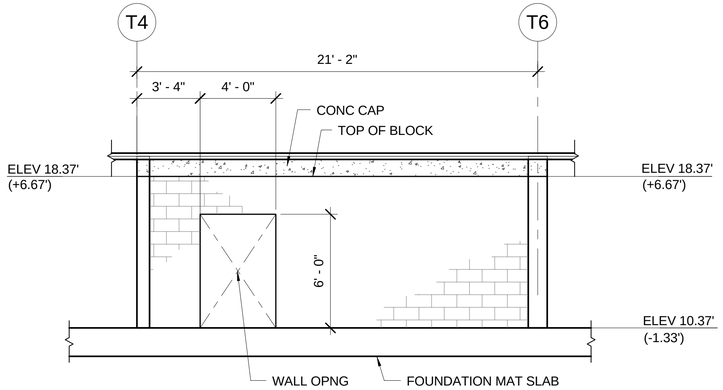

WALL TD

SCALE: 1/4" = 1'-0"

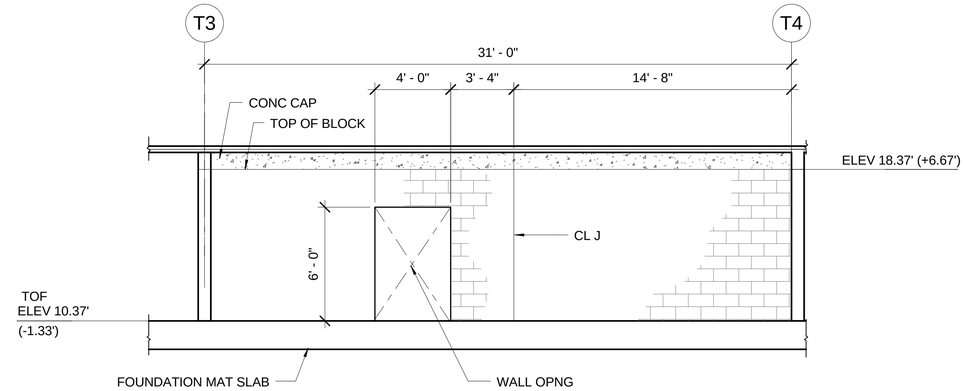

WALL TE

SCALE: 1/4" = 1'-0"

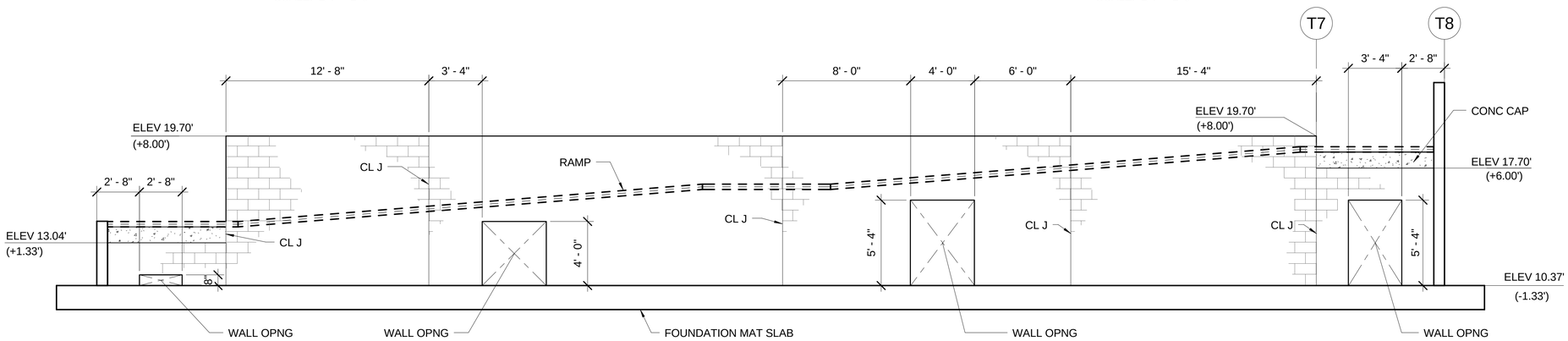

WALL TF

SCALE: 1/4" = 1'-0"

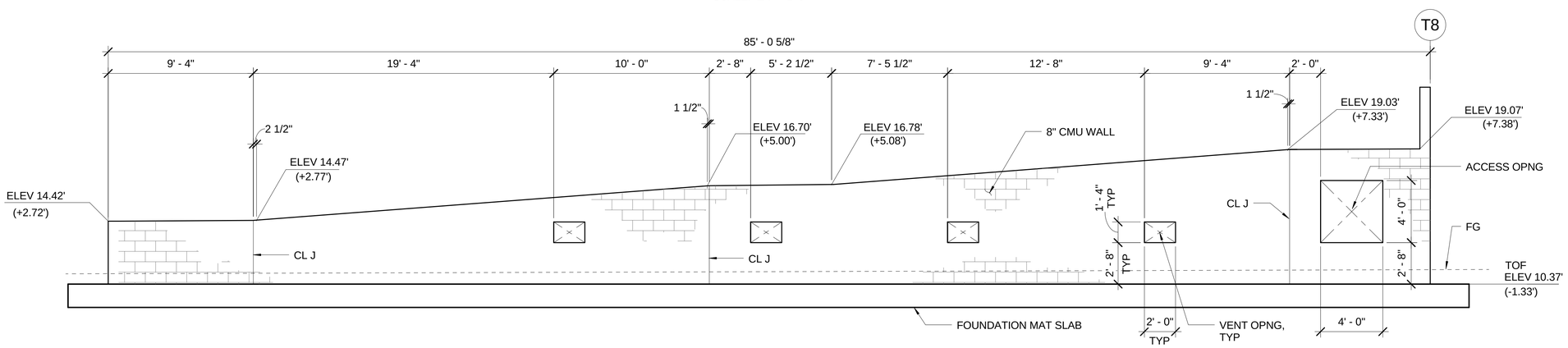

WALL TG

SCALE: 1/4" = 1'-0"

NOTES:

1. FOR NOTES AND ABBREVIATIONS, SEE DRAWING S006.

05/03/13 PERMIT SET

Sean Samuel, DESIGN OVERSIGHT	DESIGN	BY L. Johnson	CHECKED	PREPARED FOR THE STATE OF CALIFORNIA DEPARTMENT OF TRANSPORTATION
05/03/13, SIGN OFF DATE	DETAILS	BY L. Reyes	CHECKED L. Johnson	Brady Nadell, PROJECT ENGINEER
	QUANTITIES	BY	CHECKED	

BRIDGE NO.
POST MILE 2.0

IERBYS TEMPORARY IMPROVEMENTS - SITE

WALL ELEVATIONS 3

S008

DESIGN GENERAL PLAN SHEET (ENGLISH) (REV. 06-01-09)

ORIGINAL SCALE IN INCHES FOR REDUCED PLANS 0 1 2 3

CU 04
EA 0120F4

DISREGARD PRINTS BEARING EARLIER REVISION DATES

REVISION DATES (PRELIMINARY STAGE ONLY) -

SHEET 28 OF 38

C:\Users\reyesl\Documents\130222_56185_Gateway Park_Structure_ReyesL.rvt

5/2/2013 11:52:58 AM

DIST.	COUNTY	ROUTE	POST MILES TOTAL PROJECT	SHEET NO.	TOTAL SHEETS
04	Ala	80	2.0	1204cv	1204

REGISTERED ENGINEER 05/03/13 DATE

05/03/13
PLANS APPROVAL DATE

REGISTERED PROFESSIONAL ENGINEER
LAWRENCE M. JOHNSON
No. C 44006
Exp. 6/30/2013
CIVIL
STATE OF CALIFORNIA

The State of California or its officers or agents shall not be responsible for the accuracy or completeness of electronic copies of this plan sheet.

Parsons Brinckerhoff Inc.
303 Second Street, Suite 700N
San Francisco, CA 94107

Caltrans now has a web site! To get to the web site, go to http://www/dot.ca.gov

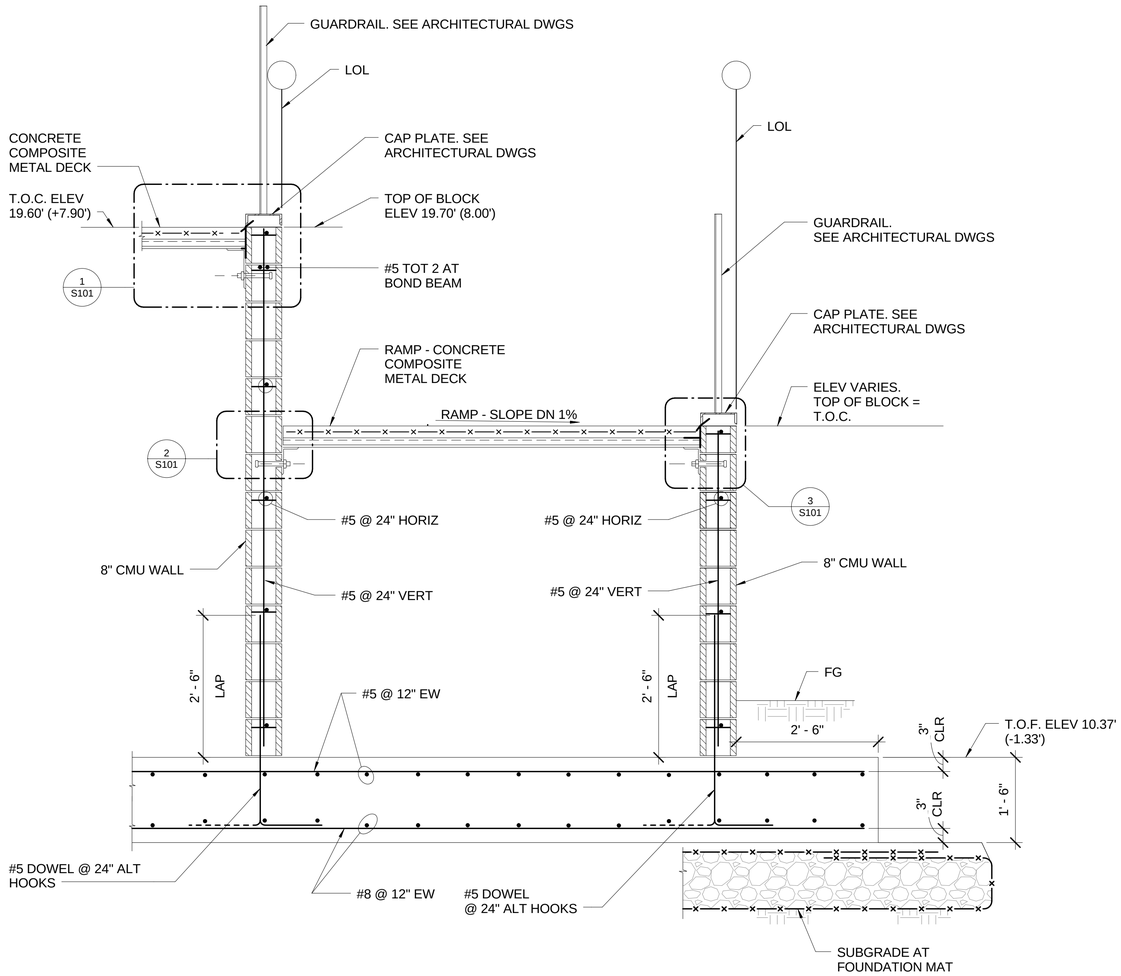

SECTION A
SCALE: 3/4" = 1'-0"

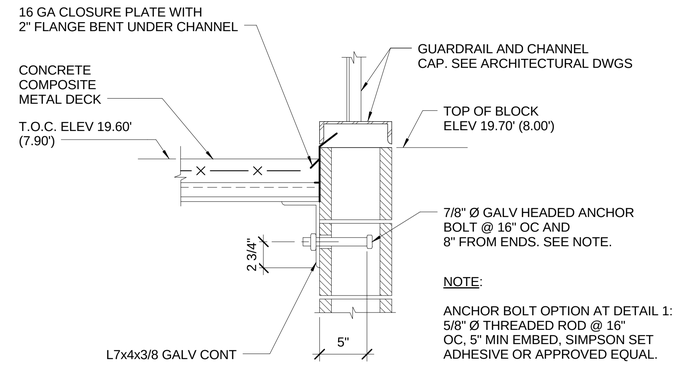

NOTE:

ANCHOR BOLT OPTION AT DETAIL 1: 5/8" Ø THREADED ROD @ 16" OC, 5" MIN EMBED, SIMPSON SET ADHESIVE OR APPROVED EQUAL.

DETAIL 1
SCALE: 1 1/2" = 1'-0"

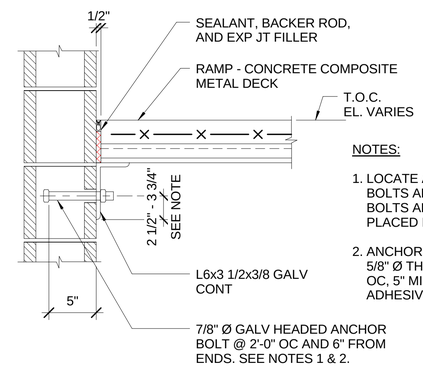

NOTES:

1. LOCATE ANCHOR BOLTS SO THAT BOLTS ARE EMBEDDED IN GROUT. BOLTS ARE NOT PERMITTED TO BE PLACED IN JOINTS.
2. ANCHOR BOLT OPTION AT DETAIL 2: 5/8" Ø THREADED ROD @ 16" OC, 5" MIN EMBED, SIMPSON SET ADHESIVE OR APPROVED EQUAL.

DETAIL 2
SCALE: 1 1/2" = 1'-0"

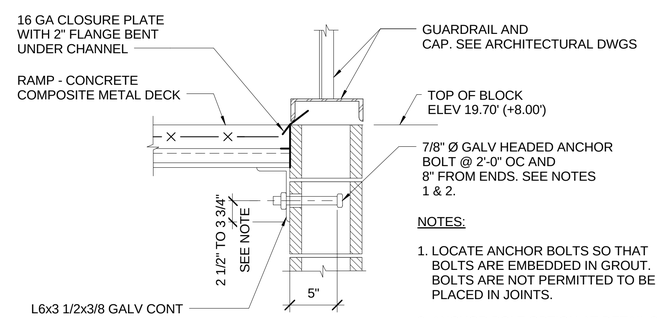

NOTES:

1. LOCATE ANCHOR BOLTS SO THAT BOLTS ARE EMBEDDED IN GROUT. BOLTS ARE NOT PERMITTED TO BE PLACED IN JOINTS.
2. ANCHOR BOLT OPTION AT DETAIL 3: 5/8" Ø THREADED ROD @ 16" OC, 5" MIN EMBED, SIMPSON SET ADHESIVE OR APPROVED EQUAL.

DETAIL 3
SCALE: 1 1/2" = 1'-0"

05/03/13 PERMIT SET

Sean Samuel
DESIGN OVERSIGHT
05/03/13
SIGN OFF DATE

	BY	CHECKED
DESIGN	L. Johnson	
DETAILS	O. Kurnovskaya	L. Johnson
QUANTITIES		

PREPARED FOR THE STATE OF CALIFORNIA DEPARTMENT OF TRANSPORTATION

Brady Nadell
PROJECT ENGINEER

BRIDGE NO.
POST MILE 2.0

IERBYS TEMPORARY IMPROVEMENTS - SITE

SECTIONS AND DETAILS 1

S101

DESIGN GENERAL PLAN SHEET (ENGLISH) (REV. 06-01-09)

ORIGINAL SCALE IN INCHES FOR REDUCED PLANS 0 1 2 3

CU 04
EA 0120F4

DISREGARD PRINTS BEARING EARLIER REVISION DATES

REVISION DATES (PRELIMINARY STAGE ONLY)

SHEET 29 OF 38

5/2/2013 11:52:59 AM

C:\Users\reyesl\Documents\130222_56185_Gateway Park_Structure_ReyesL.rvt

DIST.	COUNTY	ROUTE	POST MILES TOTAL PROJECT	SHEET N0.	TOTAL SHEETS
04	Ala	80	2.0	1204cw	1204

REGISTERED ENGINEER 05/03/13 DATE

REGISTERED PROFESSIONAL ENGINEER LAWRENCE M. JOHNSON No. C 44006 Exp. 6/30/2013 CIVIL STATE OF CALIFORNIA

05/03/13
PLANS APPROVAL DATE

The State of California or its officers or agents shall not be responsible for the accuracy or completeness of electronic copies of this plan sheet.

Parsons Brinckerhoff Inc.
303 Second Street, Suite 700N
San Francisco, CA 94107

Caltrans now has a web site! To get to the web site, go to http:/www/dot.ca.gov

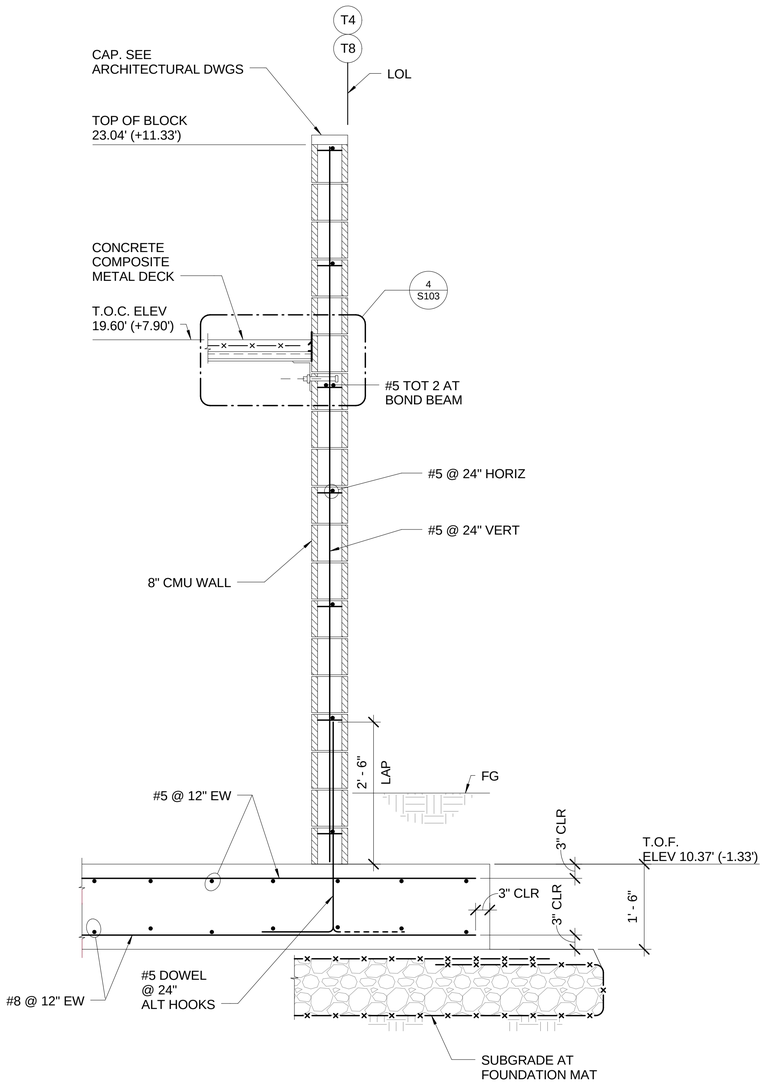

SECTION B
SCALE: 3/4" = 1'-0"

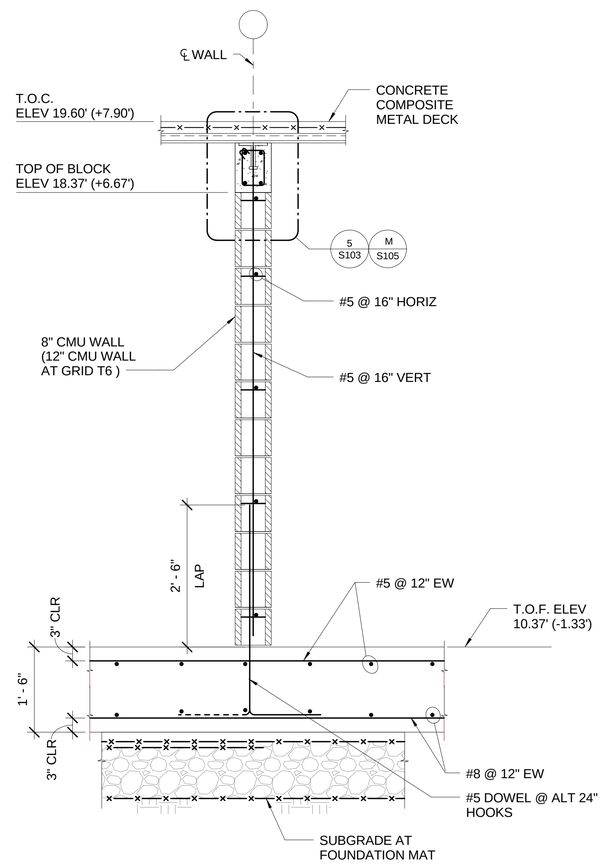

SECTION C
SCALE: 3/4" = 1'-0"

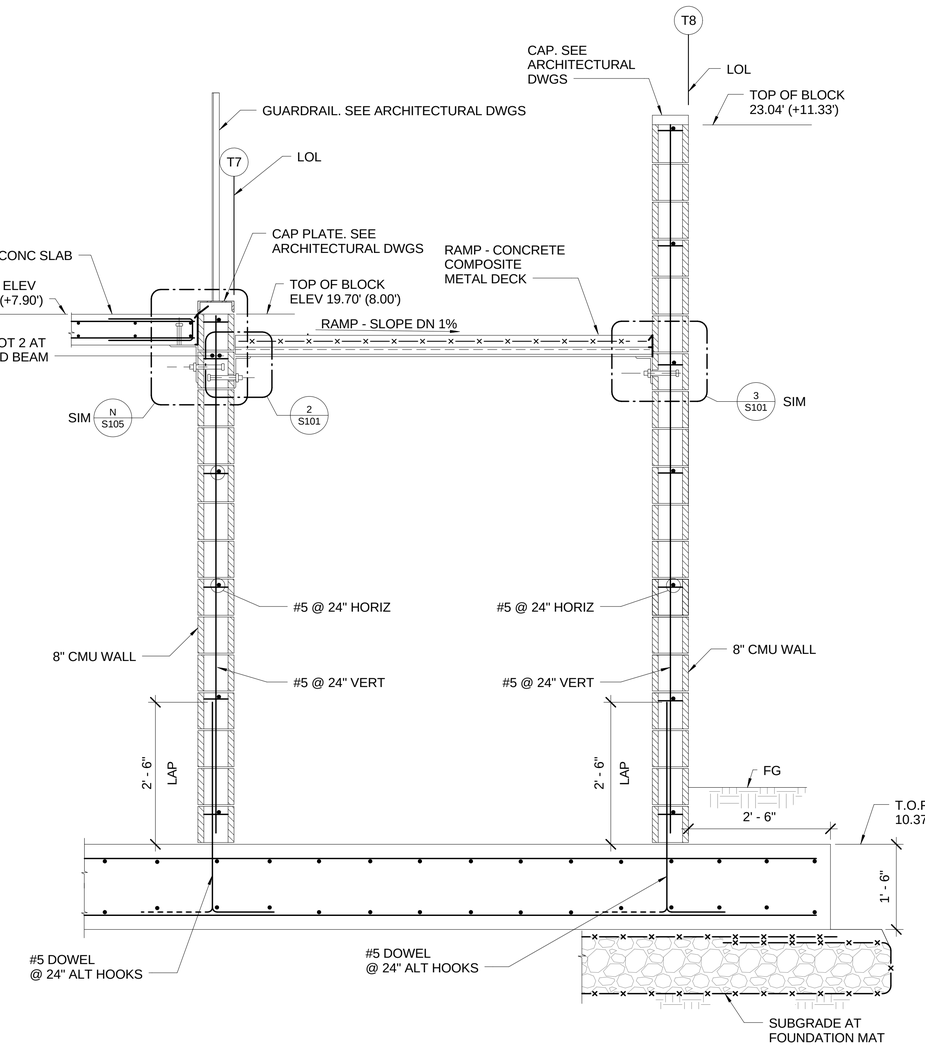

SECTION D
SCALE: 3/4" = 1'-0"

05/03/13 PERMIT SET

Sean Samuel, DESIGN OVERSIGHT; 05/03/13, SIGN OFF DATE	DESIGN BY L. Johnson CHECKED	PREPARED FOR THE STATE OF CALIFORNIA DEPARTMENT OF TRANSPORTATION	Brady Nadell, PROJECT ENGINEER	BRIDGE NO.	IERBYS TEMPORARY IMPROVEMENTS - SITE
	DETAILS BY O. Kurnovskaya CHECKED L. Johnson			POST MILE 2.0	SECTIONS AND DETAILS 2 — S102
	QUANTITIES BY CHECKED				

DESIGN GENERAL PLAN SHEET (ENGLISH) (REV. 06-01-09)

ORIGINAL SCALE IN INCHES FOR REDUCED PLANS 0 1 2 3

CU 04
EA 0120F4

DISREGARD PRINTS BEARING EARLIER REVISION DATES

REVISION DATES (PRELIMINARY STAGE ONLY) -

SHEET 30 OF 38

C:\Users\reyesl\Documents\130222_56185_Gateway Park_Structure_ReyesL.rvt

5/2/2013 11:53:00 AM

DIST.	COUNTY	ROUTE	POST MILES TOTAL PROJECT	SHEET N0.	TOTAL SHEETS
04	Ala	80	2.0	1204cx	1204

REGISTERED ENGINEER 05/03/13 DATE

REGISTERED PROFESSIONAL ENGINEER LAWRENCE M. JOHNSON No. C 44006 Exp. 6/30/2013 CIVIL STATE OF CALIFORNIA

05/03/13
PLANS APPROVAL DATE

The State of California or its officers or agents shall not be responsible for the accuracy or completeness of electronic copies of this plan sheet.

Parsons Brinckerhoff Inc.
303 Second Street, Suite 700N
San Francisco, CA 94107

Caltrans now has a web site! To get to the web site, go to http://www/dot.ca.gov

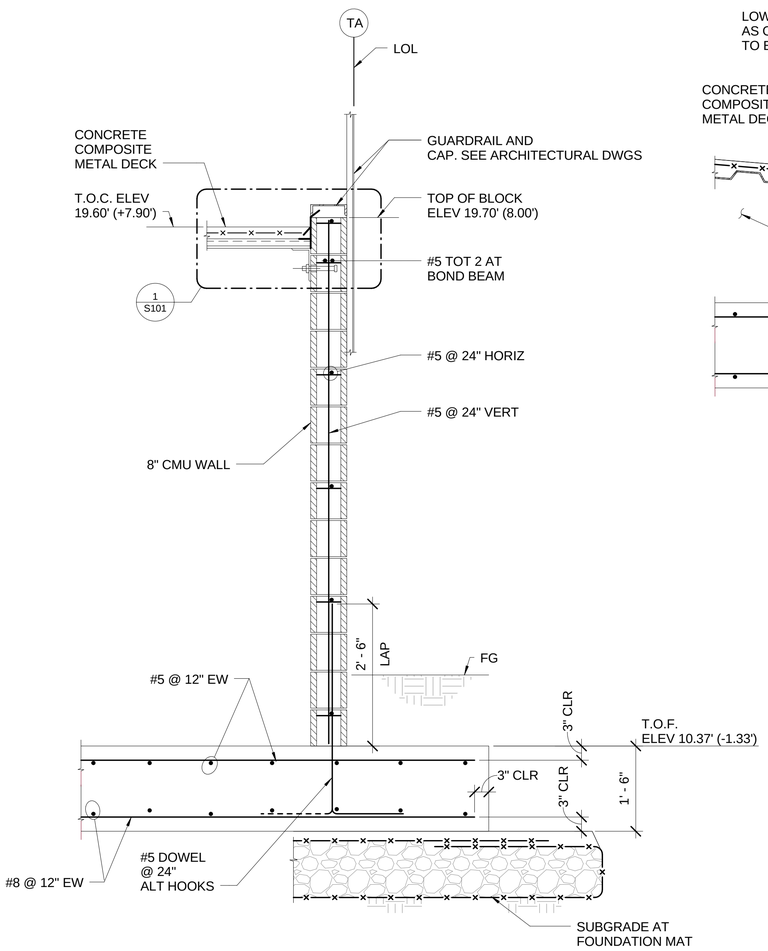

SECTION E
SCALE: 3/4" = 1'-0"

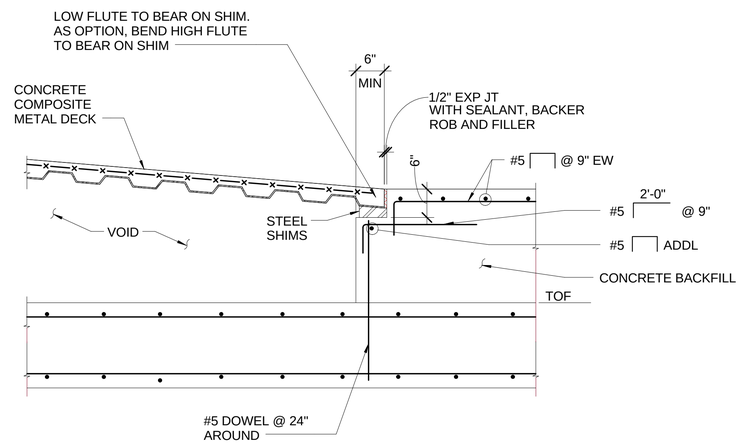

SECTION F
SCALE: 3/4" = 1'-0"

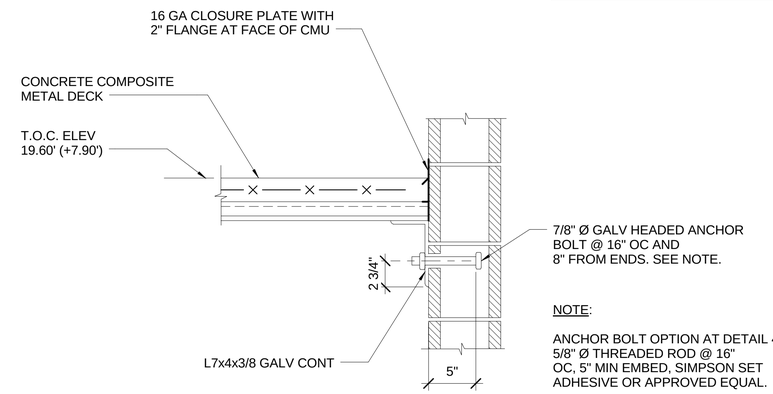

NOTE:

ANCHOR BOLT OPTION AT DETAIL 4: 5/8" Ø THREADED ROD @ 16" OC, 5" MIN EMBED, SIMPSON SET ADHESIVE OR APPROVED EQUAL.

DETAIL 4
SCALE: 1 1/2" = 1'-0"

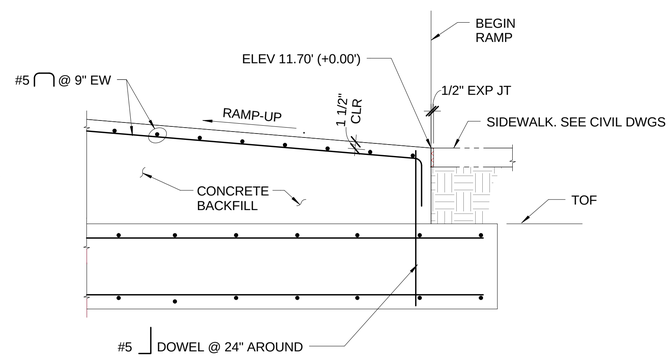

SECTION G
SCALE: 3/4" = 1'-0"

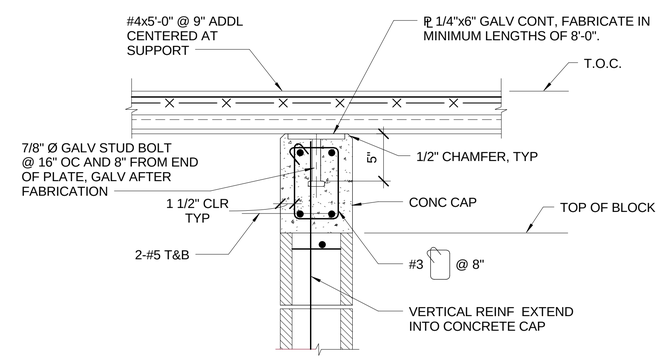

DETAIL 5
SCALE: 1 1/2" = 1'-0"

05/03/13 PERMIT SET

Sean Samuel, DESIGN OVERSIGHT	DESIGN	BY L. Johnson	CHECKED	PREPARED FOR THE STATE OF CALIFORNIA DEPARTMENT OF TRANSPORTATION
05/03/13, SIGN OFF DATE	DETAILS	BY O. Kurnovskaya	CHECKED L. Johnson	
	QUANTITIES	BY	CHECKED	

Brady Nadell, PROJECT ENGINEER

BRIDGE NO.

POST MILE 2.0

IERBYS TEMPORARY IMPROVEMENTS - SITE

SECTIONS AND DETAILS 3

S103

DESIGN GENERAL PLAN SHEET (ENGLISH) (REV. 06-01-09)

ORIGINAL SCALE IN INCHES FOR REDUCED PLANS 0 1 2 3

CU 04
EA 0120F4

DISREGARD PRINTS BEARING EARLIER REVISION DATES

REVISION DATES (PRELIMINARY STAGE ONLY) -

SHEET 31 OF 38

5/2/2013 11:53:01 AM

C:\Users\reyesl\Documents\130222_56185_Gateway Park_Structure_ReyesL.rvt

DIST.	COUNTY	ROUTE	POST MILES TOTAL PROJECT	SHEET N0.	TOTAL SHEETS
04	Ala	80	2.0	1204cy	1204

REGISTERED ENGINEER 05/03/13 DATE

REGISTERED PROFESSIONAL ENGINEER LAWRENCE M. JOHNSON No. C 44006 Exp. 6/30/2013 CIVIL STATE OF CALIFORNIA

05/03/13
PLANS APPROVAL DATE

The State of California or its officers or agents shall not be responsible for the accuracy or completeness of electronic copies of this plan sheet.

Parsons Brinckerhoff Inc.
303 Second Street, Suite 700N
San Francisco, CA 94107

Caltrans now has a web site! To get to the web site, go to http://www/dot.ca.gov

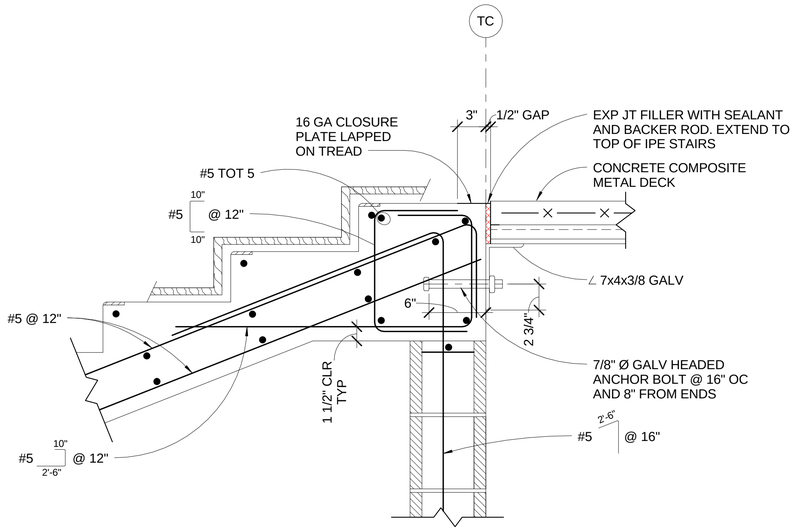

DETAIL 6
SCALE: 1 1/2" = 1'-0"

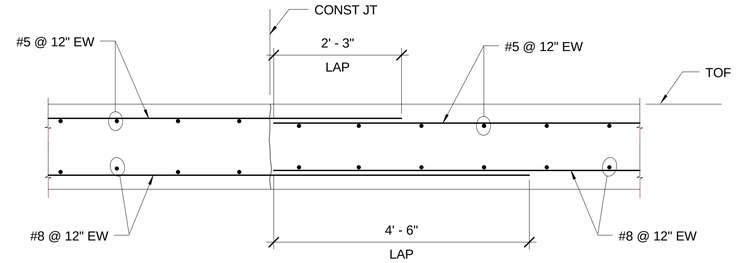

SECTION J
SCALE: 3/4" = 1'-0"

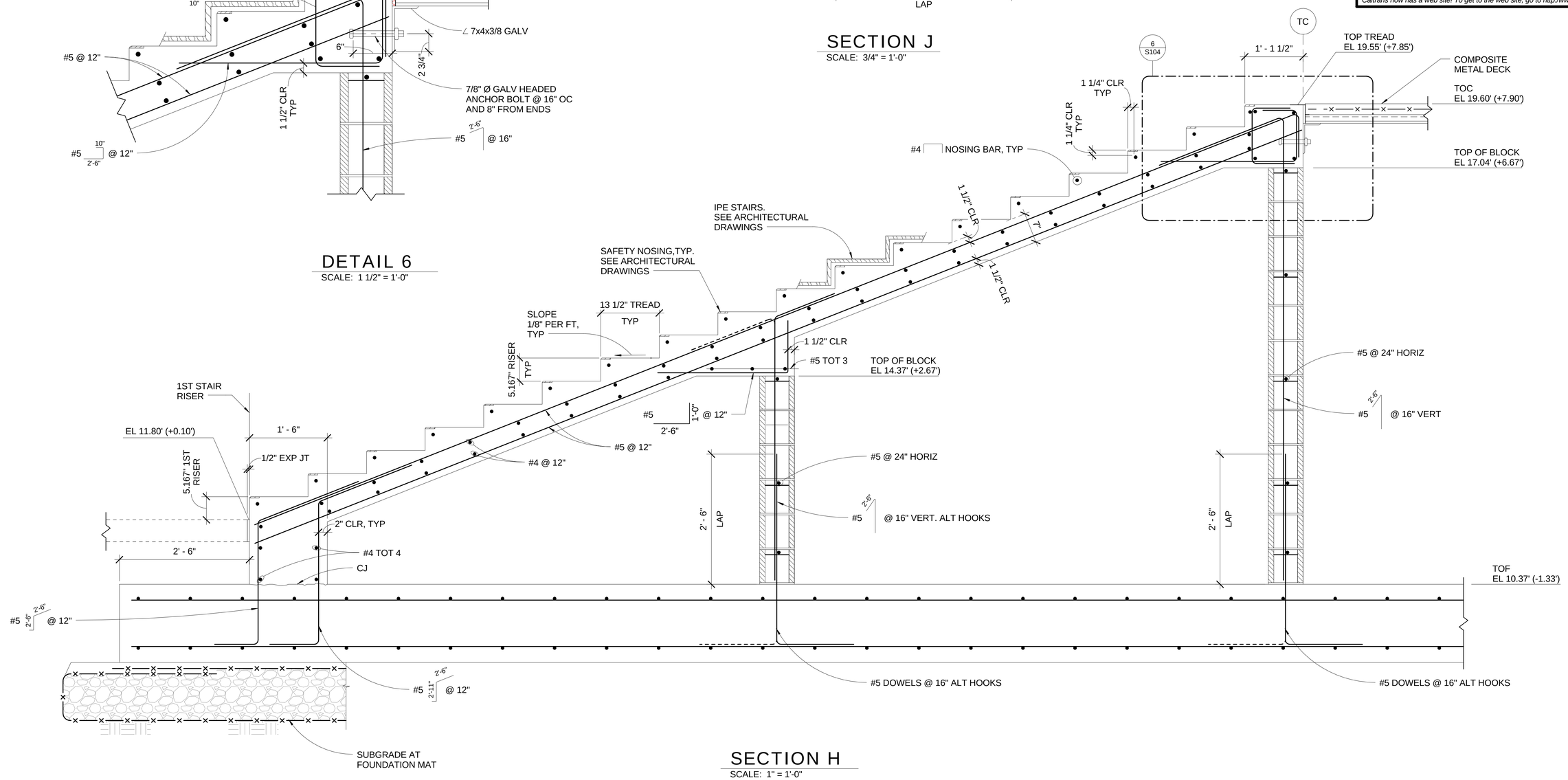

SECTION H
SCALE: 1" = 1'-0"

05/03/13 PERMIT SET

Sean Samuel DESIGN OVERSIGHT 05/03/13 SIGN OFF DATE		DESIGN BY L. Johnson CHECKED	PREPARED FOR THE STATE OF CALIFORNIA DEPARTMENT OF TRANSPORTATION	Brady Nadell PROJECT ENGINEER	BRIDGE NO. POST MILE 2.0	IERBYS TEMPORARY IMPROVEMENTS - SITE SECTIONS AND DETAILS 4 S104
		DETAILS BY O. Kurnovskaya CHECKED L. Johnson				
		QUANTITIES BY CHECKED				

DESIGN GENERAL PLAN SHEET (ENGLISH) (REV. 06-01-09)

ORIGINAL SCALE IN INCHES FOR REDUCED PLANS 0 1 2 3

CU 04
EA 0120F4

DISREGARD PRINTS BEARING EARLIER REVISION DATES

REVISION DATES (PRELIMINARY STAGE ONLY)

SHEET 32 OF 38

C:\Users\reyesl\Documents\130222_56185_Gateway Park_Structure_ReyesL.rvt

5/2/2013 11:53:02 AM

DIST.	COUNTY	ROUTE	POST MILES TOTAL PROJECT	SHEET N0.	TOTAL SHEETS
04	Ala	80	2.0	1204cz	1204

REGISTERED ENGINEER 05/03/13 DATE

REGISTERED PROFESSIONAL ENGINEER LAWRENCE M. JOHNSON No. C 44006 Exp. 6/30/2013 CIVIL STATE OF CALIFORNIA

05/03/13
PLANS APPROVAL DATE

The State of California or its officers or agents shall not be responsible for the accuracy or completeness of electronic copies of this plan sheet.

Parsons Brinckerhoff Inc.
303 Second Street, Suite 700N
San Francisco, CA 94107

Caltrans now has a web site! To get to the web site, go to http://www/dot.ca.gov

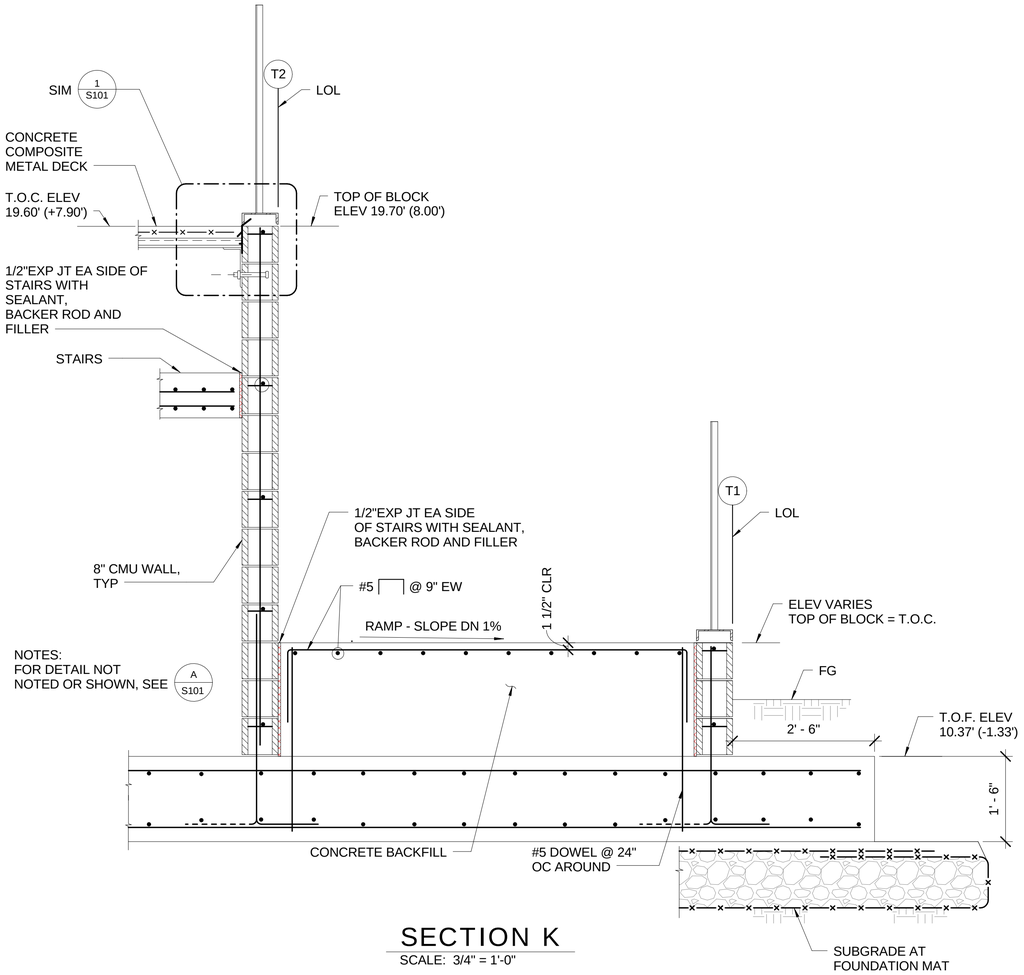

SECTION K

SCALE: 3/4" = 1'-0"

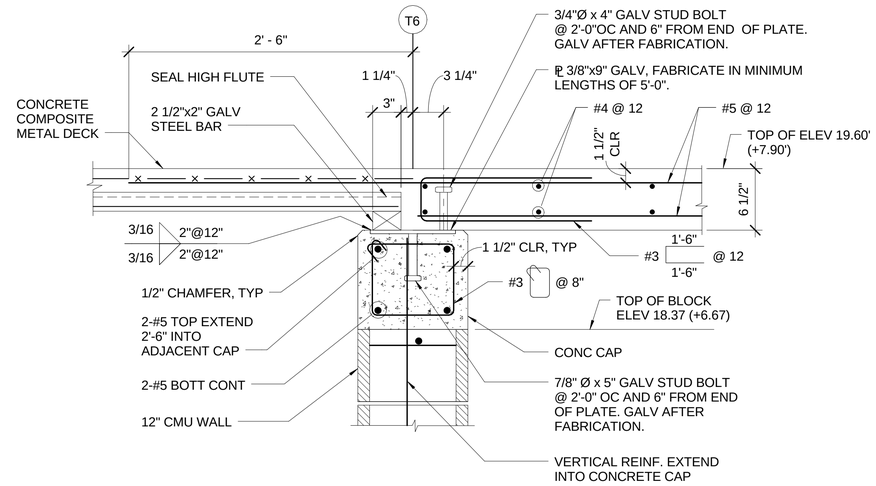

SECTION M

SCALE: 1 1/2" = 1'-0"

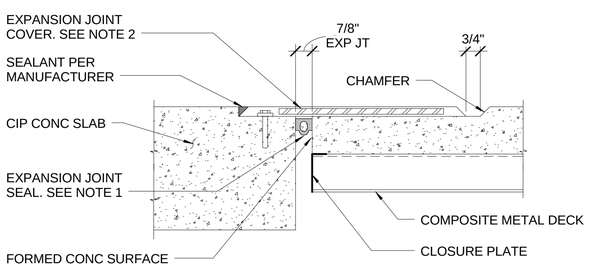

NOTES:
1. EXPANSION JOINT SEAL SHALL BE WABD-INVERSEAL IV-100 APPROVED EQUAL. JOINT SEAL SHALL BE WATERPROOF.
2. EXPANSION JOINT COVER SHALL BE WABD-SAFETY FLEX SFP-600, OR APPROVED EQUAL.

SECTION L

SCALE: 3" = 1'-0"

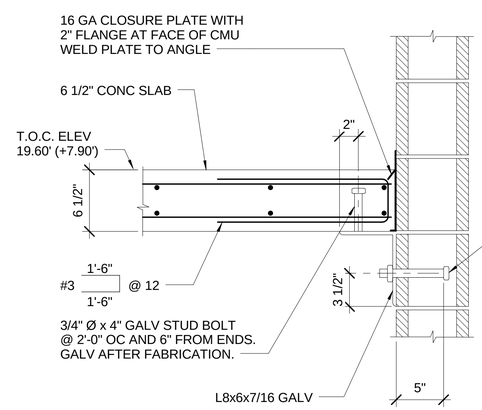

NOTE:

ANCHOR BOLT OPTION AT SECTION N: 5/8" Ø THREADED ROD @ 8" OC, 5" MIN EMBED, SIMPSON SET ADHESIVE OR APPROVED EQUAL.

SECTION N

SCALE: 1 1/2" = 1'-0"

05/03/13 PERMIT SET

Sean Samuel
DESIGN OVERSIGHT
05/03/13
SIGN OFF DATE

	BY	CHECKED
DESIGN	L. Johnson	
DETAILS	O. Kurnovskaya	L. Johnson
QUANTITIES		

PREPARED FOR THE STATE OF CALIFORNIA DEPARTMENT OF TRANSPORTATION

Brady Nadell
PROJECT ENGINEER

BRIDGE NO.
POST MILE 2.0

IERBYS TEMPORARY IMPROVEMENTS - SITE
SECTIONS AND DETAILS 5
S105

DESIGN GENERAL PLAN SHEET (ENGLISH) (REV. 06-01-09)

ORIGINAL SCALE IN INCHES FOR REDUCED PLANS 0 1 2 3

CU 04
EA 0120F4

DISREGARD PRINTS BEARING EARLIER REVISION DATES

REVISION DATES (PRELIMINARY STAGE ONLY) -

SHEET 33 OF 38

5/2/2013 11:53:03 AM

C:\Users\reyesl\Documents\130222_56185_Gateway Park_Structure_ReyesL.rvt

DIST.	COUNTY	ROUTE	POST MILES TOTAL PROJECT	SHEET N0.	TOTAL SHEETS
04	Ala	80	2.0	1204da	1204

REGISTERED ENGINEER 05/03/13 DATE

05/03/13
PLANS APPROVAL DATE

REGISTERED PROFESSIONAL ENGINEER
LAWRENCE M. JOHNSON
No. C 44006
Exp. 6/30/2013
CIVIL
STATE OF CALIFORNIA

The State of California or its officers or agents shall not be responsible for the accuracy or completeness of electronic copies of this plan sheet.

Parsons Brinckerhoff Inc.
303 Second Street, Suite 700N
San Francisco, CA 94107

Caltrans now has a web site! To get to the web site, go to http://www/dot.ca.gov

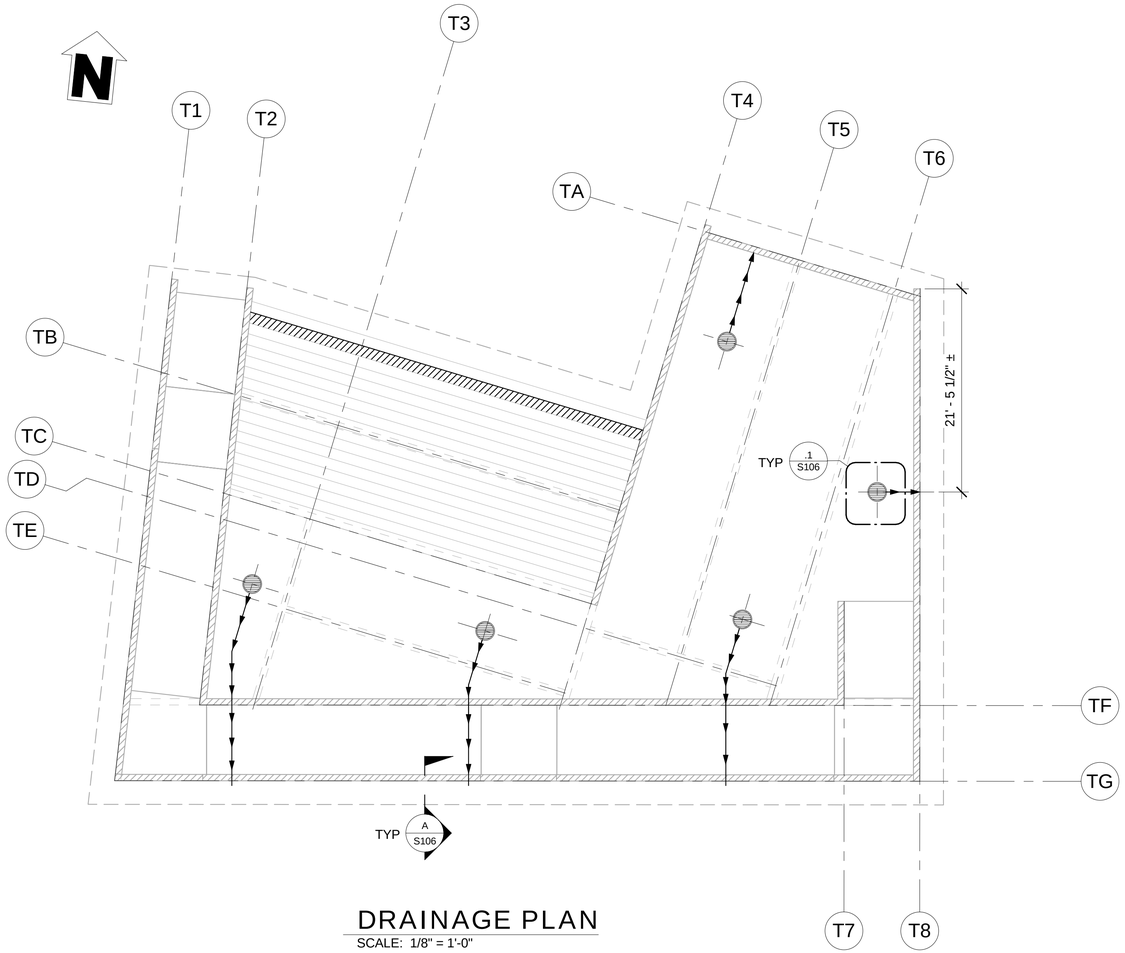

DRAINAGE PLAN
SCALE: 1/8" = 1'-0"

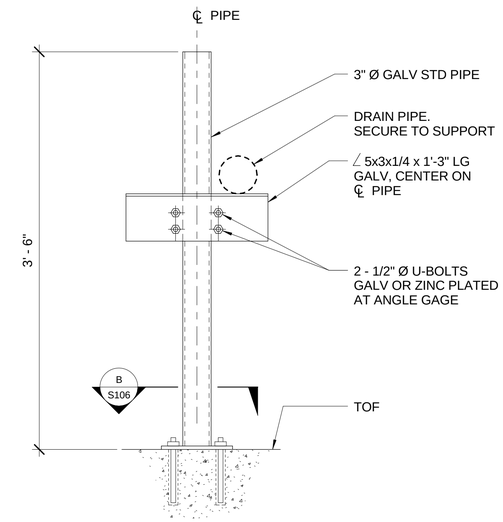

PIPE SUPPORT
DETAIL 2
SCALE: 1 1/2" = 1'-0"

NOTES:

1. DRAIN SHALL BE A CAST IRON DECK DRAIN WITH GRATE AT SURFACE OF CONCRETE DECK. THE MINIMUM FREE GRATE AREA SHALL BE 30 IN² SEE SPECIFICATIONS FOR ADDITIONAL INFORMATION.
2. PIPE TO BE NPS 4x0.135" MIN GALVANIZED WELDED STEEL. FITTINGS AND BENDS SHALL HAVE A MINIMUM WALL THICKNESS OF 1/8".
3. ALL PIPE JOINTS OR CONNECTIONS TO BE BUTT WELDED OR CONNECTED BY A STEEL PIPE SLEEVE AND TO BE SMOOTH THROUGHOUT INSIDE OF PIPE.
4. ALL PIPE BENDS TO BE 1'-6" MINIMUM RADIUS MEASURED ALONG CENTERLINE OF PIPE. ALL BENDS TO BE SMOOTH.
5. PIPES TO BE SUPPORTED AT 10'-0" MAXIMUM. SEE 2 S106
6. THE MINIMUM PIPE SLOPE SHAL BE 1.5%.

LEGEND:

AREA DRAIN
3" Ø PIPE

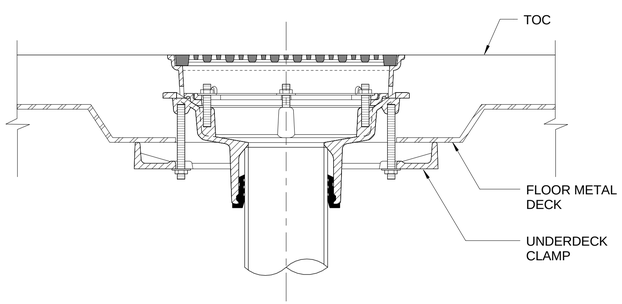

AREA DRAIN
DETAIL 1
SCALE: 3" = 1'-0"

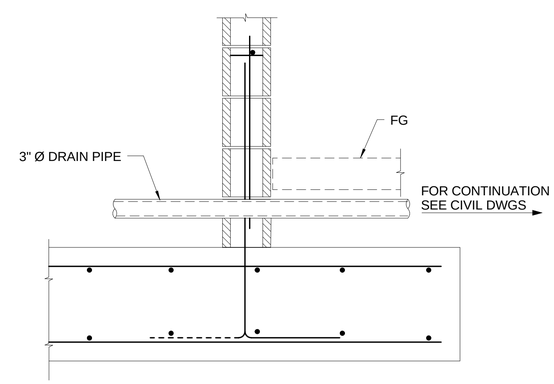

SECTION A
SCALE: 1" = 1'-0"

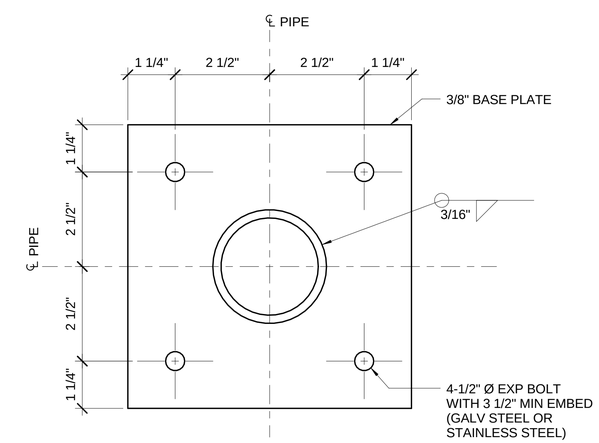

SECTION B
SCALE: 6" = 1'-0"

05/03/13 PERMIT SET

Sean Samuel, DESIGN OVERSIGHT	DESIGN BY L. Johnson	CHECKED	PREPARED FOR THE STATE OF CALIFORNIA DEPARTMENT OF TRANSPORTATION
05/03/13, SIGN OFF DATE	DETAILS BY L. Reyes	CHECKED L. Johnson	
	QUANTITIES BY	CHECKED	

Brady Nadell, PROJECT ENGINEER

BRIDGE NO.
POST MILE 2.0

IERBYS TEMPORARY IMPROVEMENTS - SITE
DRAINAGE DETAILS
S106

DESIGN GENERAL PLAN SHEET (ENGLISH) (REV. 06-01-09)

ORIGINAL SCALE IN INCHES FOR REDUCED PLANS 0 1 2 3

CU 04
EA 0120F4

DISREGARD PRINTS BEARING EARLIER REVISION DATES

REVISION DATES (PRELIMINARY STAGE ONLY)

SHEET 34 OF 38

C:\Users\reyesl\Documents\130222_56185_Gateway Park_Structure_ReyesL.rvt

5/2/2013 11:53:04 AM

DIST.	COUNTY	ROUTE	POST MILES TOTAL PROJECT	SHEET N0.	TOTAL SHEETS
04	Ala	80	2.0	1204db	1204

REGISTERED ENGINEER 05/03/13 DATE

REGISTERED PROFESSIONAL ENGINEER LAWRENCE M. JOHNSON No. C 44006 Exp. 6/30/2013 CIVIL STATE OF CALIFORNIA

05/03/13
PLANS APPROVAL DATE

The State of California or its officers or agents shall not be responsible for the accuracy or completeness of electronic copies of this plan sheet.

Parsons Brinckerhoff Inc.
303 Second Street, Suite 700N
San Francisco, CA 94107

Caltrans now has a web site! To get to the web site, go to http://www/dot.ca.gov

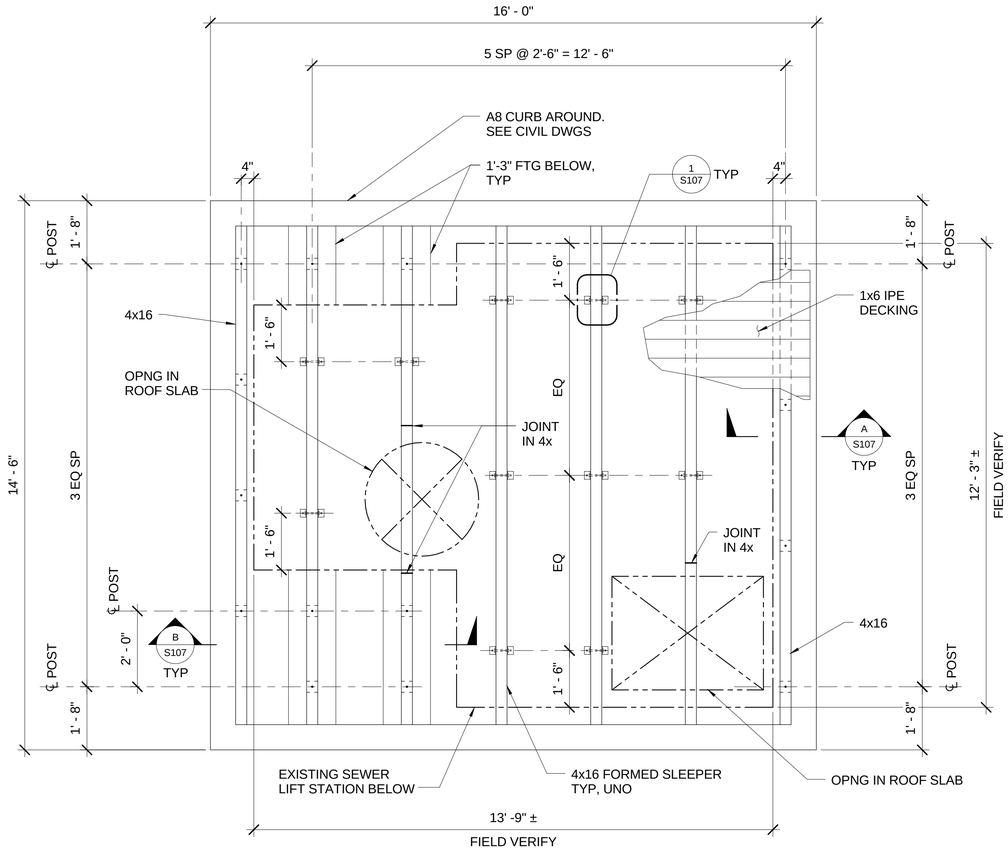

LIFT STATION COVER PLAN

SCALE: 1/2" = 1'-0"

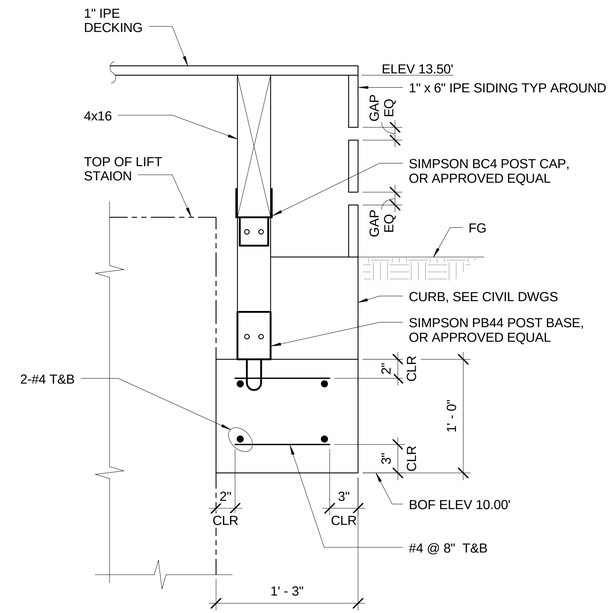

SECTION A

SCALE: 1 1/2" = 1'-0"

NOTES:

1. DECKING SHALL BE 1"x6" IPE.
2. FASTEN DECKING WITH #8 STAINLESS STEEL SCREWS TO ALLOW FOR PERIODIC REMOVAL OF THE DECK. PROVIDE TWO SCREWS PER 1x6 AT EACH 4x SUPPORT.
3. TIMBER SHALL BE PRESSURE TREATED DOUGLAS FIR NO. 1 OR BETTER.

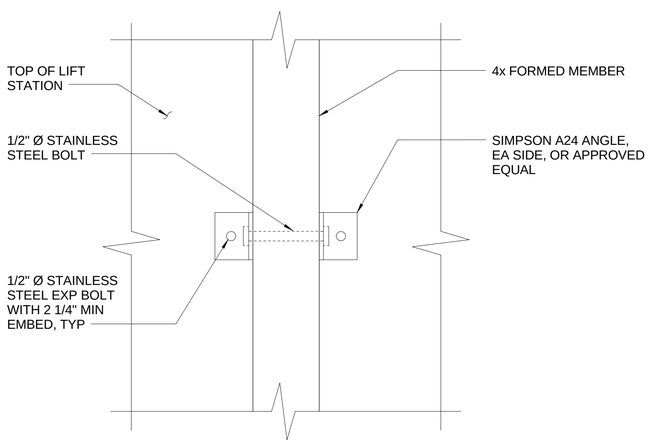

DETAIL 1

SCALE: 3" = 1'-0"

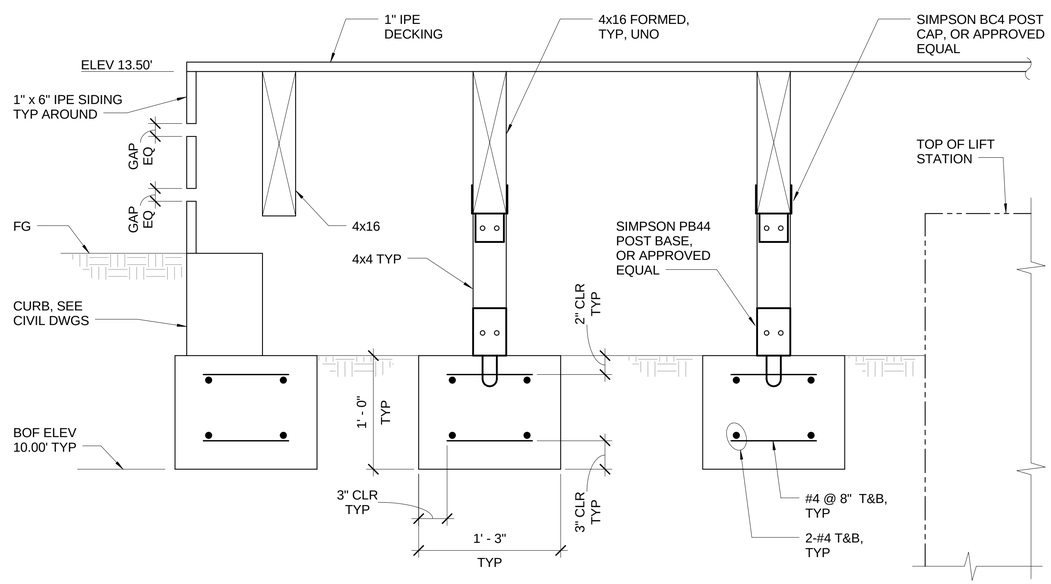

SECTION B

SCALE: 1 1/2" = 1'-0"

05/03/13 PERMIT SET

Sean Samuel, DESIGN OVERSIGHT	DESIGN BY L. Johnson	CHECKED	PREPARED FOR THE STATE OF CALIFORNIA DEPARTMENT OF TRANSPORTATION
05/03/13, SIGN OFF DATE	DETAILS BY O. Kurnovskaya	CHECKED L. Johnson	Brady Nadell, PROJECT ENGINEER
	QUANTITIES BY	CHECKED	

BRIDGE NO.

POST MILE 2.0

IERBYS TEMPORARY IMPROVEMENTS - SITE

LIFT STATION COVER DETAILS

S107

DESIGN GENERAL PLAN SHEET (ENGLISH) (REV. 06-01-09)

ORIGINAL SCALE IN INCHES FOR REDUCED PLANS 0 1 2 3

CU 04
EA 0120F4

DISREGARD PRINTS BEARING EARLIER REVISION DATES

REVISION DATES (PRELIMINARY STAGE ONLY) -

SHEET 35 OF 38

C:\Users\reyesl\Documents\130222_56185_Gateway Park_Structure_ReyesL.rvt

5/2/2013 11:53:05 AM

DIST.	COUNTY	ROUTE	POST MILES TOTAL PROJECT	SHEET N0.	TOTAL SHEETS
04	Ala	80	2.0	1204dc	1204

REGISTERED ENGINEER 05/03/13 DATE

05/03/13
PLANS APPROVAL DATE

REGISTERED PROFESSIONAL ENGINEER
LAWRENCE M. JOHNSON
No. C 44006
Exp. 6/30/2013
CIVIL
STATE OF CALIFORNIA

The State of California or its officers or agents shall not be responsible for the accuracy or completeness of electronic copies of this plan sheet.

Parsons Brinckerhoff Inc.
303 Second Street, Suite 700N
San Francisco, CA 94107

Caltrans now has a web site! To get to the web site, go to http://www/dot.ca.gov

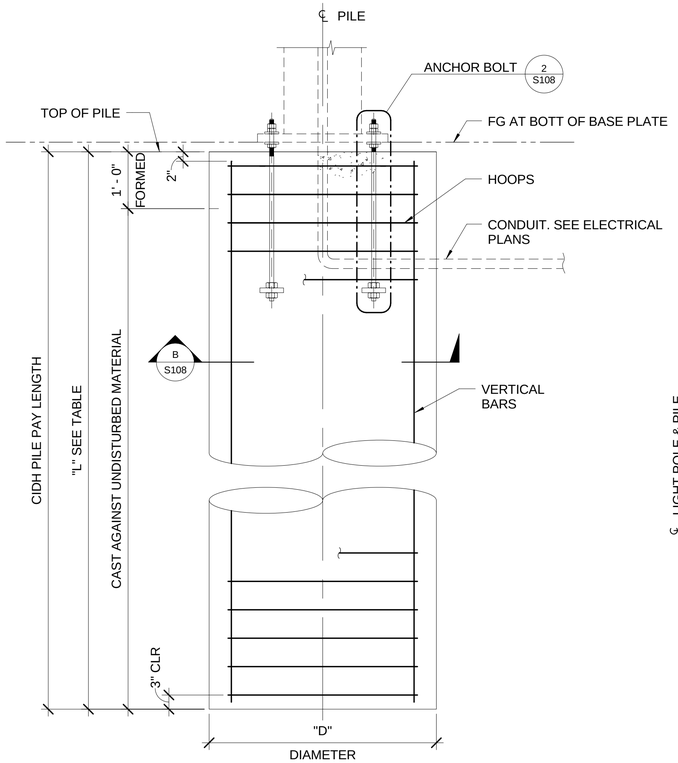

SECTION A-A
SCALE: 3/4" = 1'-0"

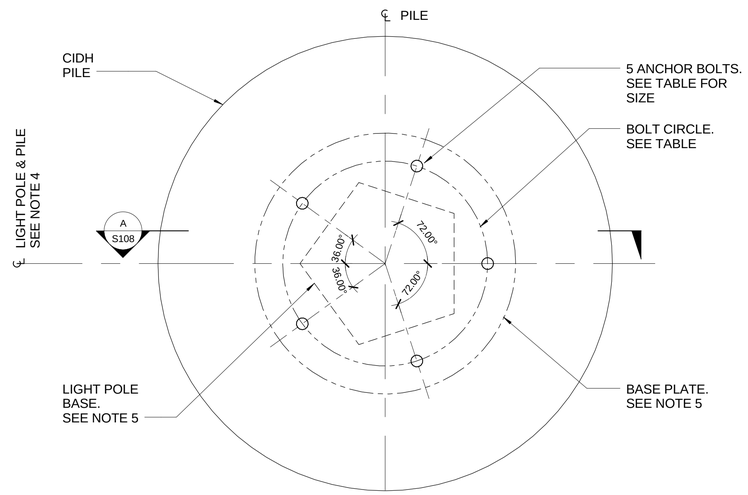

LIGHT POLE FOUNDATION PLAN
SCALE: 1 1/2" = 1'-0"

GENERAL NOTES:

1. ALL ANCHOR BOLT COMPONENTS SHALL BE GALVANIZED
2. WELDED SPLICE SHALL BE USED AT ALL HOOPS.
3. ALL CIDH PILE REINFORCING SHALL BE EPOXY COATED.
4. FOR ORIENTATION OF LIGHT POLE, SEE LANDSCAPE DRAWINGS.
5. FOR LIGHT POLE DETAIL, SEE ELECTRICAL DRAWINGS.

POLE HEIGHT	ANCHORAGE DATA			CIDH PILE DATA				
	BC=BOLTCIRCLE	ANCHOR BOLTS						
		DIA	LENGTH	"D"	"L"	VERT BARS	HOOPS (BUTT WELDED)	INSPECTION TUBES
39.4'	25.20"	1 1/2"	3'-11"	4'-0"	30'-0"	16 - #9	2 - #4 @ 7"	4
49.2'	28.35"	1 3/4"	3'-11"	4'-6"	35'-0"	18 - #9	2 - #4 @ 7"	5
57.4'	29.92"	2"	4'-7"	4'-6"	35'-0"	18 - #9	2 - #4 @ 7"	5

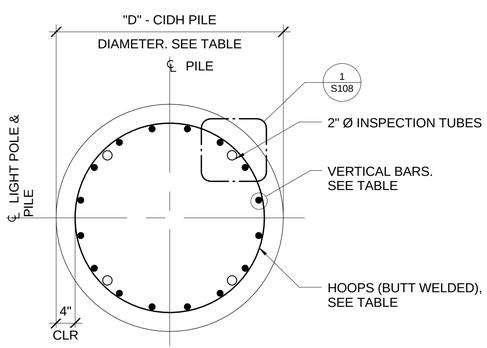

SECTION B-B
SCALE: 3/4" = 1'-0"

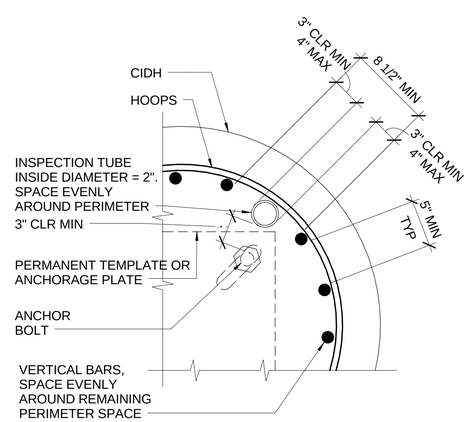

DETAIL 1
SCALE: 1 1/2" = 1'-0"

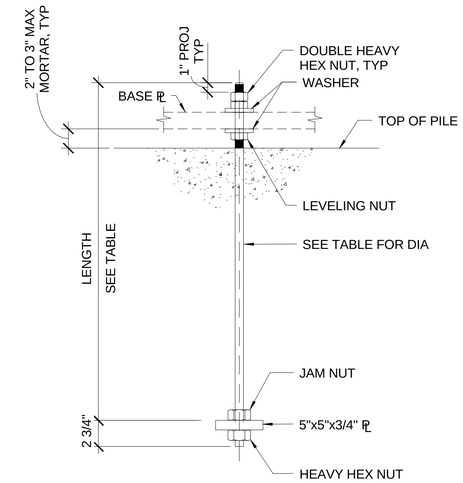

POLE ANCHOR BOLT

DETAIL 2
SCALE: 1 1/2" = 1'-0"

05/03/13 PERMIT SET

Sean Samuel, DESIGN OVERSIGHT; 05/03/13, SIGN OFF DATE	DESIGN	BY L. Johnson	CHECKED	PREPARED FOR THE STATE OF CALIFORNIA DEPARTMENT OF TRANSPORTATION	Brady Nadell, PROJECT ENGINEER
	DETAILS	BY O. Kurnovskaya	CHECKED L. Johnson		
	QUANTITIES	BY	CHECKED		

BRIDGE NO.
POST MILE 2.0

IERBYS TEMPORARY IMPROVEMENTS - SITE
LIGHT POLE FOUNDATION DETAILS
S108

DESIGN GENERAL PLAN SHEET (ENGLISH) (REV. 06-01-09)

ORIGINAL SCALE IN INCHES FOR REDUCED PLANS 0 1 2 3

CU 04
EA 0120F4

DISREGARD PRINTS BEARING EARLIER REVISION DATES

REVISION DATES (PRELIMINARY STAGE ONLY) -

SHEET 36 OF 38

C:\Users\reyesl\Documents\130222_56185_Gateway Park_Structure_ReyesL.rvt

5/2/2013 4:25:09 PM

DIST.	COUNTY	ROUTE	POST MILES TOTAL PROJECT	SHEET N0.	TOTAL SHEETS
04	Ala	80	2.0	1204dd	1204

REGISTERED ENGINEER 05/03/13 DATE

05/03/13
PLANS APPROVAL DATE

REGISTERED PROFESSIONAL ENGINEER
LAWRENCE M. JOHNSON
No. C 44006
Exp. 6/30/2013
CIVIL
STATE OF CALIFORNIA

The State of California or its officers or agents shall not be responsible for the accuracy or completeness of electronic copies of this plan sheet.

Parsons Brinckerhoff Inc.
303 Second Street, Suite 700N
San Francisco, CA 94107

Caltrans now has a web site! To get to the web site, go to http://www/dot.ca.gov

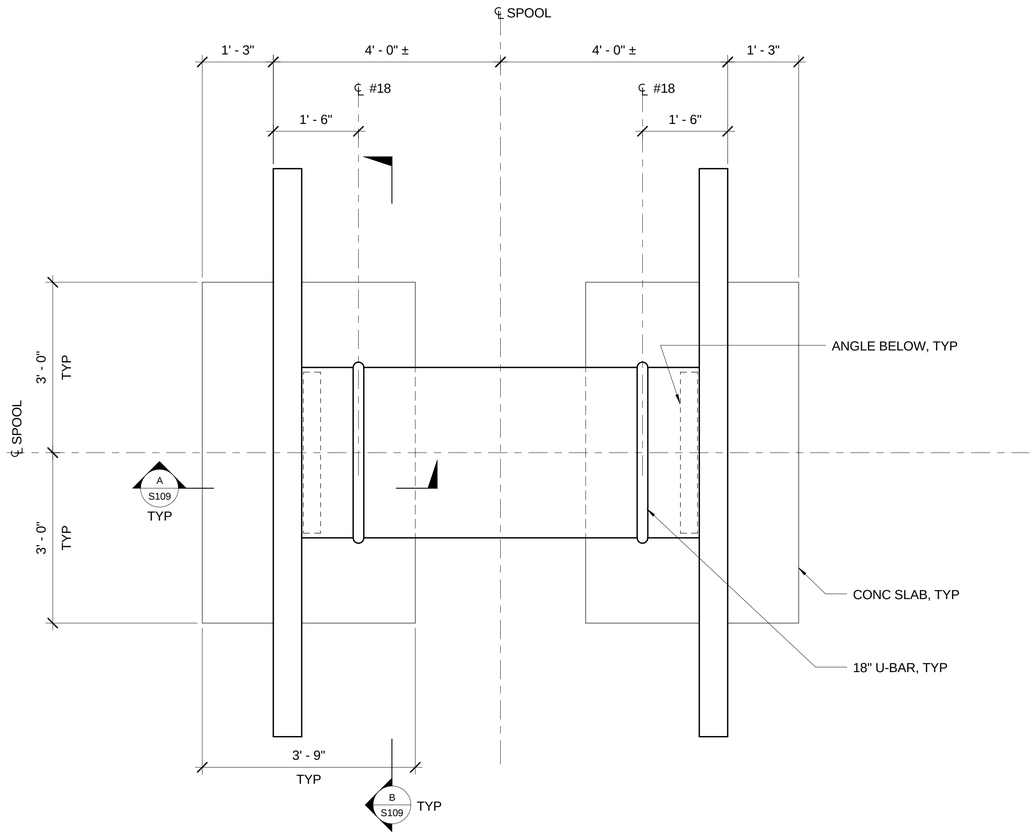

PLAN - LARGE CABLE SPOOL

SCALE: 3/4" = 1'-0"

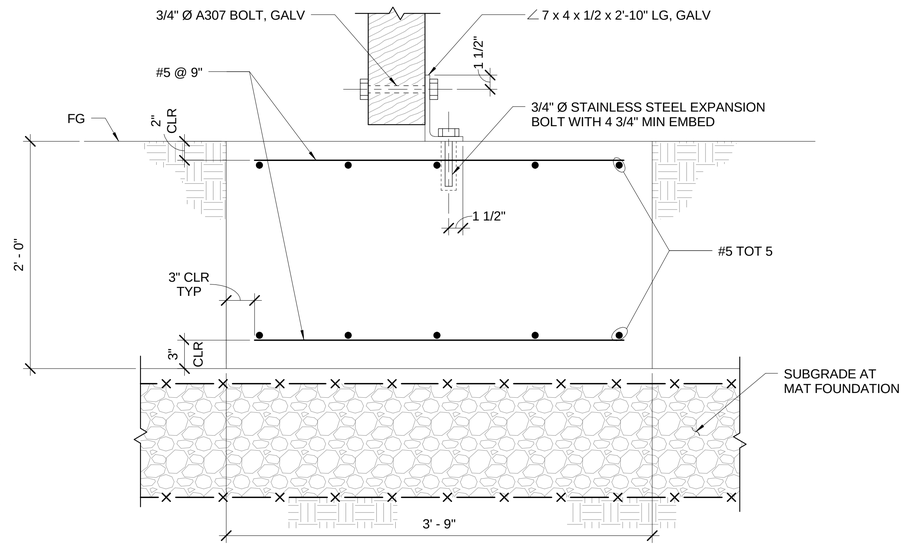

SECTION A

SCALE: 1 1/2" = 1'-0"

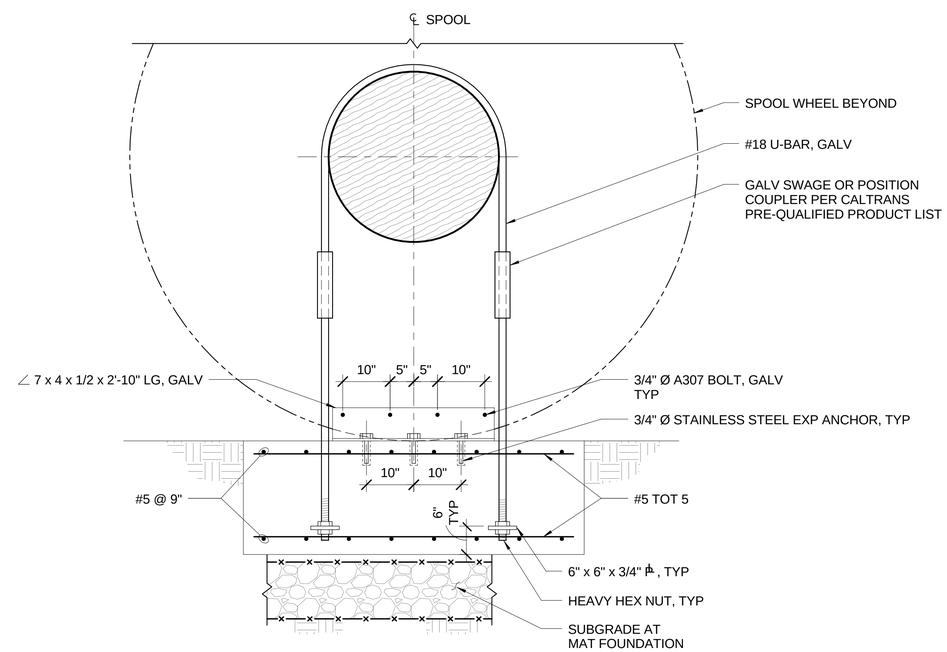

SECTION B

SCALE: 3/4" = 1'-0"

05/03/13 PERMIT SET

Sean Samuel, DESIGN OVERSIGHT	DESIGN BY L. Johnson	CHECKED	PREPARED FOR THE STATE OF CALIFORNIA DEPARTMENT OF TRANSPORTATION
05/03/13, SIGN OFF DATE	DETAILS BY L. Reyes	CHECKED L. Johnson	Brady Nadell, PROJECT ENGINEER
	QUANTITIES BY	CHECKED	

BRIDGE NO.
POST MILE 2.0

IERBYS TEMPORARY IMPROVEMENTS - SITE
LARGE CABLE SPOOL FOUNDATION
S109

DESIGN GENERAL PLAN SHEET (ENGLISH) (REV. 06-01-09)

ORIGINAL SCALE IN INCHES FOR REDUCED PLANS 0 1 2 3

CU 04
EA 0120F4

DISREGARD PRINTS BEARING EARLIER REVISION DATES

REVISION DATES (PRELIMINARY STAGE ONLY)

SHEET 37 OF 38

C:\Users\reyesl\Documents\130222_56185_Gateway Park_Structure_ReyesL.rvt

5/2/2013 11:53:05 AM

DIST.	COUNTY	ROUTE	POST MILES TOTAL PROJECT	SHEET NO.	TOTAL SHEETS
04	Ala	80	2.0	1204de	1204

REGISTERED ENGINEER — 4/12/13 DATE

05/03/13
PLANS APPROVAL DATE

REGISTERED PROFESSIONAL ENGINEER ANDREW HARRINGTON No. E19367 ELECTRICAL STATE OF CALIFORNIA

The State of California or its officers or agents shall not be responsible for the accuracy or completeness of electronic copies of this plan sheet.

HNTB CORPORATION
1111 BROADWAY
9TH FLOOR
OAKLAND, CA 94607

HNTB Corporation Engineers Architects Planners

Caltrans now has a web site! To get to the web site, go to http://www/dot.ca.gov

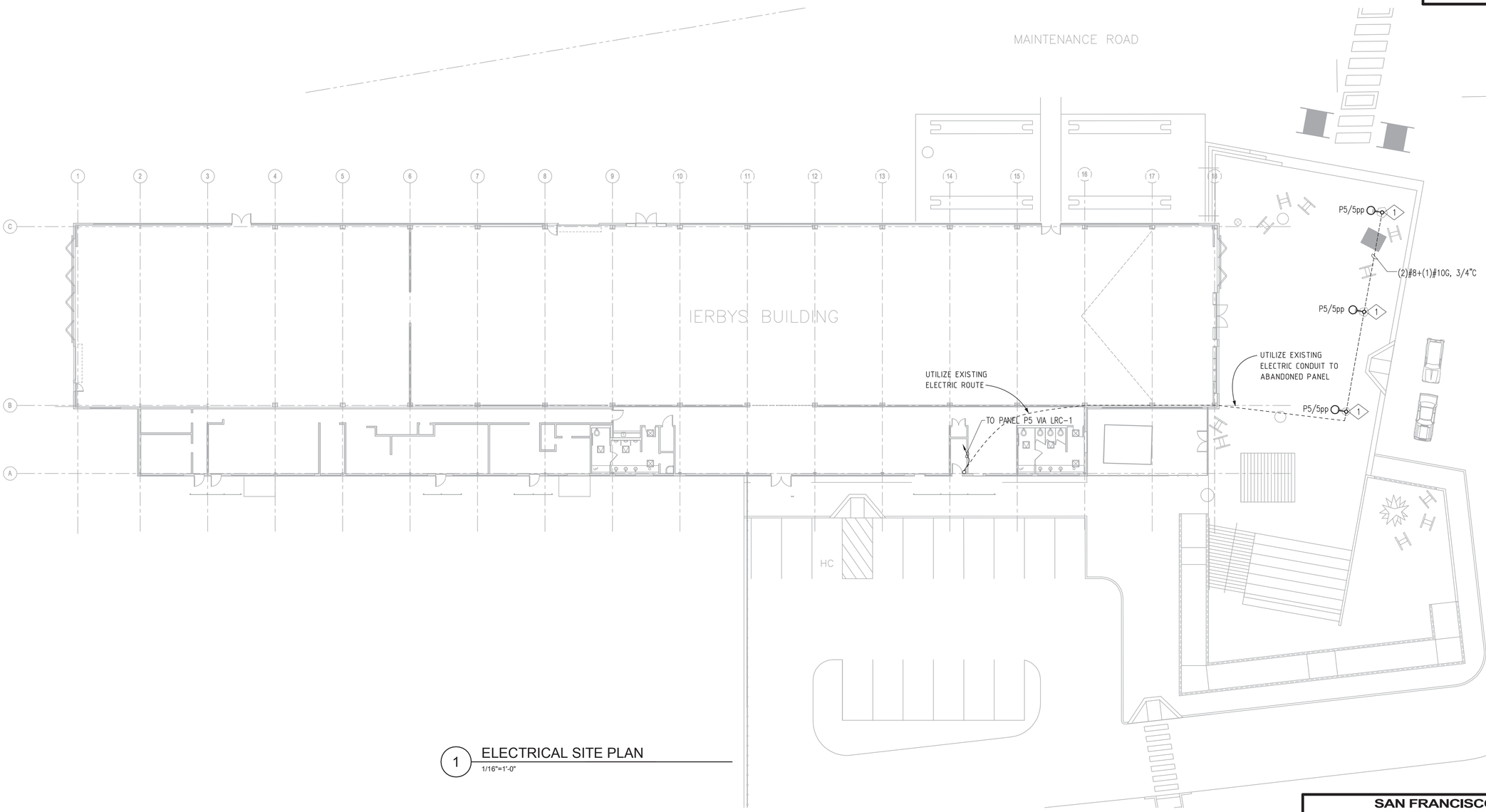

1 ELECTRICAL SITE PLAN
1/16"=1'-0"

SHEET NOTES

A. ENSURE THAT EXISTING UNDERGROUND CONDUITS AND CONDUCTORS TO BE REUSED ARE PROTECTED DURING DEMOLITION.

NUMBERED NOTES

1. EXTERIOR POLE MOUNTED FIXTURE PER CALIFORNIA DEPARTMENT OF TRANSPORTATION SPECIFICATIONS. FIXTURE TO BE COMPATIBLE WITH 120VAC INPUT POWER AND LESS THAN OR EQUAL TO 300W.

05/03/13 PERMIT SET

N

SAN FRANCISCO OAKLAND BAY BRIDGE
EAST SPAN SEISMIC SAFETY PROJECT

IERBYS TEMPORARY IMPROVEMENTS - SITE

ELECTRICAL SITE PLAN — E100

Trinh Lai
DESIGN OVERSIGHT
05/03/13
SIGN OFF DATE

	BY	CHECKED
DESIGN	ANDREW HARRINGTON	ROBERT NIXDORF
DETAILS		
QUANTITIES		

PREPARED FOR THE STATE OF CALIFORNIA DEPARTMENT OF TRANSPORTATION

KAREN Y. WANG
PROJECT ENGINEER

BRIDGE NO.
POST MILE 2.0

DESIGN GENERAL PLAN SHEET (ENGLISH) (REV. 06-01-09)

ORIGINAL SCALE IN INCHES FOR REDUCED PLANS 0 1 2 3

UNIT: 04
PROJECT NUMBER AND PHASE:
CONTRACT NO.: 0120F4

DISREGARD PRINTS BEARING EARLIER REVISION DATES

REVISION DATES

SHEET 38 OF 38

C:\Users\cschurr\Documents\56185_Gateway Park - Central_cschurr.rvt

4/12/2013 11:58:03 AM

Final Construction Document Specifications

For

IERBYS Temporary Improvements Site

Interurban Electric Railway
Bridge Yard Shop
Oakland, CA

Caltrans

Contract Number: 04-0120F4

May 3rd, 2013

HNTB

05/03/13 PERMIT SET

STAMP SHEET

The special provisions contained herein have been prepared by or under the direction of the following registered persons.

STRUCTURES

REGISTERED PROFESSIONAL ENGINEER
STEVE MARGARIS
No. 36845
Exp. 6/30/14
CIVIL
STATE OF CALIFORNIA

REGISTERED CIVIL ENGINEER

ARCHITECTURE

LICENSED ARCHITECT
GREGORY P. BAKER
C-16884
10.31.2013
RENEWAL DATE
STATE OF CALIFORNIA

REGISTERED ARCHITECT

CIVIL ENGINEER

REGISTERED PROFESSIONAL ENGINEER
JOHN Wm MOUNTIN
No. C 39335
Exp. 12/31/13
CIVIL
STATE OF CALIFORNIA

REGISTERED ENGINEER

LANDSCAPE ARCHITECT

LICENSED LANDSCAPE ARCHITECT
STUART H BUSSIAN No 4443
Signature
06-30-13
Renewal Date
05-03-13
Date
STATE OF CALIFORNIA

REGISTERED LANDSCAPE ARCHITECT

STRUCTURAL ENGINEER

REGISTERED PROFESSIONAL ENGINEER
LAWRENCE M. JOHNSON
SE3814
Exp. 6-30-13
STRUCTURAL
STATE OF CALIFORNIA

REGISTERED ENGINEER

05/03/13 PERMIT SET

DOCUMENT 000110

TABLE OF CONTENTS

INTRODUCTORY INFORMATION
000101 Project Title Page
000110 Table of Contents

GENERAL REQUIREMENTS SUBGROUP
DIVISION 01 - GENERAL REQUIREMENTS

011420 Construction Site Management (Cal-Trans Spec)
013530 Health and Safety Plan (Cal-Trans Spec)
017420 Handling, Transportation, and Disposal of Contaminated Material (Cal-Trans Spec)

FACILITY CONSTRUCTION SUBGROUP
DIVISION 02 - EXISTING CONDITIONS

024100 Demolition

DIVISION 03 - CONCRETE

031100 Concrete Forming
031500 Concrete Accessories
032000 Concrete Reinforcing
033000 Cast-In-Place Concrete
033500 Concrete Finishing
036111 Non-Shrink Grout

DIVISION 04 - MASONRY

042200 Concrete Masonry Units

DIVISION 05 - METALS

053000 Metal Deck
055000 Metal Fabrications
057000 Decorative Metal
057300 Stainless Steel Railings
058100 Expansion Joint Cover Assemblies

DIVISION 06 – WOOD, PLASTICS, AND COMPOSITES

061500 Wood Decking

DIVISION 07 - THERMAL AND MOISTURE PROTECTION

076000 Flashing and Sheet Metal
079200 Joint Sealants

DIVISION 08 - OPENINGS

081100 Metal Doors and Frames
087100 Door Hardware
089100 Louvers

DIVISION 09 - FINISHES

099000 Painting and Coating

DIVISION 10 - SPECIALTIES

101453 Traffic Signage

DIVISION 11 - EQUIPMENT

NOT USED

DIVISION 12 - FURNISHINGS

129313 Bicycle Racks

DIVISION 13 - SPECIAL CONSTRUCTION

130000 Site Seating – Wood Spools

DIVISION 14 - CONVEYING EQUIPMENT

NOT USED

DIVISION 20 – UNDERGROUND UTILITIES

205016 Underground Ductwork and Structures for Facility Services

FACILITY SERVICES SUBGROUP
DIVISION 21 – FIRE SUPPRESSION

NOT USED

DIVISION 22 – PLUMBING

224713 Drinking Fountain

DIVISION 23 – HEATING, VENTILATING, AND AIR CONDITIONING (HVAC)

NOT USED

DIVISION 25 – INTEGRATED AUTOMATION

NOT USED

DIVISION 26 - ELECTRICAL

NOT USED

DIVISION 27 - COMMUNICATIONS

NOT USED

DIVISION 28 – ELECTRONIC SAFETY AND SECURITY

NOT USED

SITE AND INFRASTRUCTURE SUBGROUP
DIVISION 31 – EARTHWORK

310000	Earthwork
311000	Clearing and Grubbing

DIVISION 32 – EXTERIOR IMPROVEMENTS

321123	Aggregate Base Course
321216	Asphalt Paving
321313	Concrete Paving
321621	Concrete Curbs, Gutters and Walks
321713	Parking Bumpers
321723	Pavement Markings
321726	Detectable Warning Tactiles
321813	Synthetic Lawn
323113	Chain Link Fences and Gates

DIVISION 33 – UTILITIES

330525	Support and Protection of Utilities
330528	Trenching and Backfilling for Utilities
330535	Protection, Removal and Abandonment of Utility Pipes

SECTION 011420

CONSTRUCTION SITE MANAGEMENT

PART 1 - WASTE MANAGEMENT

1.1 SOLID WASTE

A. Do not allow litter, trash, or debris to accumulate anywhere on the job site, including storm drain grates, trash racks, and ditch lines. Pick up and remove litter, trash, and debris from the job site at least once a week. The WPC manager must monitor solid waste storage and disposal procedures on the job site.

B. If practicable, recycle nonhazardous job site waste and excess material. If recycling is not practicable, dispose of it under Section 7-1.13, "Disposal of Materials Outside the Highway Right of Way," of the Standard Specifications.

C. Furnish enough closed-lid dumpsters of sufficient size to contain the solid waste generated by work activities. When refuse reaches the fill line, empty the dumpsters. Dumpsters must be watertight. Do not wash out dumpsters at the job site. Furnish additional containers and pick up dumpsters more frequently during the demolition phase of construction.

D. Solid waste includes:

1. Brick
2. Mortar
3. Timber
4. Metal scraps
5. Sawdust
6. Pipe
7. Electrical Cuttings
8. Nonhazardous equipment parts
9. Styrofoam and other packaging materials
10. Vegetative material and plant containers from highway planting
11. Litter and smoking material, including litter generated randomly by the public
12. Other trash and debris

E. Furnish and use trash receptacles in the job site yard, field trailers, and locations where workers gather for lunch and breaks.

1.2 HAZARDOUS WASTE AND CONTAMINATION

A. If hazardous waste is, or will be, generated on the job site, the WPC manager must be thoroughly familiar with proper hazardous waste handling and emergency procedures under 40 CFR § 262.34(d)(5)(iii) and must have successfully completed training under 22 CA Code of Regs § 66265.16.

B. The WPC manager must:

1. Oversee and enforce hazardous waste management practices
2. Inspect all hazardous waste storage areas daily, including all temporary containment facilities and satellite collection locations
3. Oversee all hazardous waste transportation activities on the job site

C. Submit a copy of uniform hazardous waste manifest forms to the Engineer within 24 hours of transporting hazardous waste.

D. Submit receiving landfill documentation of proper disposal to the Engineer within 5 business days of hazardous waste transport from the project.

1.3 UNANTICIPATED DISCOVERY OF ASBESTOS AND HAZARDOUS SUBSTANCES

A. Upon discovery of asbestos or hazardous substance, comply with Section 14-11.02 "Asbestos and Hazardous Substances," of the Standard Specifications.

1.4 HAZARDOUS WASTE MANAGEMENT PRACTICES

A. Handle, store, and dispose of hazardous waste under 22 CA Code of Regs Div 4.5.

B. Use the following storage procedures:

1. Store hazardous waste and potentially hazardous waste separately from nonhazardous waste at the job site.
2. For hazardous waste storage, use metal containers approved by the United States Department of Transportation for the transportation and temporary storage of hazardous waste.
3. Store hazardous waste in sealed, covered containers labeled with the contents and accumulation start date under 22 CA Code of Regs, Div 4.5. Labels must comply with the provisions of 22 CA Code of Regs, Div 4.5.§ 66262.31 and § 66262.32. Immediately replace damaged or illegible labels.
4. Handle hazardous waste containers such that no spillage occurs.
5. Store hazardous waste away from storm drains, watercourses, moving vehicles, and equipment.
6. Furnish containers with adequate storage volume at convenient satellite locations for hazardous waste collection. Immediately move these containers to secure temporary containment facilities when no longer needed at the collection location or when full.
7. Store hazardous waste and potentially hazardous waste in secure temporary containment enclosures having hours. Temporary containment enclosures must be located away from public access. Acceptable secure enclosures include a locked chain link fenced area or a lockable shipping container located within the project limits.
8. Design and construct secondary containment facilities with a capacity to contain precipitation from a 24- hour-long, 25-year storm; and 10 percent of the aggregate volume of all containers, or the entire volume of the largest container within the facility, whichever is greater.
9. Cover secondary containment facilities during non-working days and if a storm event is predicted. Secondary containment facilities must be adequately ventilated.
10. Keep secondary containment facility free of accumulated rainwater or spills. After a storm event, or in the event of spills or leaks, collect accumulated liquid and place into drums within 24 hours. Handle these liquids as hazardous waste unless testing determines them to be nonhazardous.
11. Do not store incompatible wastes, such as chlorine and ammonia, in the same secondary containment facility.
12. Provide sufficient separation between stored containers to allow for spill cleanup or emergency response access. Storage areas must be kept clean, well-organized, and equipped with cleanup supplies appropriate for the wastes being stored.
13. Repair or replace perimeter controls, containment structures, covers, and liners as necessary. Inspect storage areas before and after a storm event, and at least weekly during other times.

C. Do not:

1. Overfill hazardous waste containers
2. Spill hazardous waste or potentially hazardous waste
3. Mix hazardous wastes
4. Allow hazardous waste or potentially hazardous waste to accumulate on the ground

D. Dispose of hazardous waste within 90 days of the start of generation. Use a hazardous waste manifest and a transporter registered with the DTSC and in compliance with the CA Highway Patrol Biennial Inspection of Terminals Program to transport hazardous waste to an appropriately permitted hazardous waste management facility.

1.5 DUST CONTROL FOR HAZARDOUS WASTE OR CONTAMINATION

A. Excavation, transportation, and handling of material containing hazardous waste or contamination must result in no visible dust migration. Have a water truck or tank on the job site at all times while clearing and grubbing and performing earthwork operations in work areas containing hazardous waste or contamination.

1.6 STOCKPILING OF HAZARDOUS WASTE OR CONTAMINATION

A. Do not stockpile material containing hazardous waste or contamination unless ordered. Stockpiles of material containing hazardous waste or contamination must not be placed where affected by surface run-on or run-off. Cover stockpiles with 13 mils minimum thickness of plastic sheeting or 1 foot of nonhazardous material. Do not place stockpiles in environmentally sensitive areas. Stockpiled material must not enter storm drains, inlets, or waters of the State.

1.7 CONTRACTOR-GENERATED HAZARDOUS WASTE

A. You are the generator of hazardous waste generated as a result of materials you bring to the job site. Use hazardous waste management practices if you generate waste on the job site from the following substances:

1. Petroleum materials
2. Asphalt materials
3. Concrete curing compound
4. Pesticides
5. Acids
6. Paints
7. Stains
8. Solvents
9. Wood preservatives
10. Roofing tar
11. Road flares
12. Lime
13. Glues and adhesives
14. Materials classified as hazardous waste under 22 CA Code of Regs, Div 4.5

B. If hazardous waste constituent concentrations are unknown, use a laboratory certified by the ELAP under the California Department Of Public Health to analyze a minimum of 4 discrete representative samples of the waste to determine whether it is a hazardous waste and to determine safe and lawful methods for storage and disposal. Perform sampling and analysis in compliance with US EPA Test Methods for Evaluating Solid Waste, Physical/Chemical Methods (SW-846) and under 22 CA Code of Regs, Div 4.5.

C. Use your US EPA Generator Identification Number and sign hazardous waste manifests for the hazardous waste you generate.

D. Identify contaminated soil resulting from spills or leaks by noticing discoloration, or differences in soil properties. Immediately notify the Engineer of spills or leaks. Clean up spills and leaks under the Engineer's direction and to the satisfaction of the Engineer. Soil with evidence of contamination must be sampled and analysis performed by a laboratory certified by ELAP.

E. If sampling and analysis of contaminated soil demonstrates that it is a hazardous waste, handle and dispose of the soil as hazardous waste. You are the generator of hazardous waste created as the result of spills or leaks for which you are responsible.

F. Prevent the flow of water, including ground water, from mixing with contaminated soil by using one or a combination of the following measures:

1. Berms
2. Cofferdams
3. Grout curtains
4. Freeze walls
5. Concrete seal course

G. If water mixes with contaminated soil and becomes contaminated, sample and analyze the water using a laboratory certified by the ELAP. If analysis results demonstrate that the water is a hazardous waste, manage and dispose of the water as hazardous waste.

1.8 DEPARTMENT-GENERATED HAZARDOUS WASTE

A. If the Department is the generator of hazardous waste during the work performed on this project, use hazardous waste management practices

B. Labels must comply with the provisions of 22 CA Code of Regs § 66262.31 and § 66262.32. Mark labels with:
1. Date the hazardous waste is generated
2. The words "Hazardous Waste"
3. Composition and physical state of the hazardous waste (for example, asphalt grindings with thermoplastic or paint)
4. The word "Toxic"
5. Name, address, and telephone number of the Engineer
6. Contract number
7. Contractor or subcontractor name

C. Handle the containers such that no spillage occurs.

1.9 HAZARDOUS WASTE TRANSPORT AND DISPOSAL

A. Dispose of hazardous waste within California at a disposal site operating under a permit issued by the DTSC.

B. The Engineer will obtain the US EPA Generator Identification Number for hazardous waste disposal.

C. The Engineer will sign all hazardous waste manifests. Notify the Engineer 5 business days before the manifests are to be signed.

D. The Department will not consider you a generator of the hazardous waste and you will not be obligated for further cleanup, removal, or remedial action for such material if handled or disposed of under these specifications and the appropriate State and federal laws and regulations and county and municipal ordinances and regulations regarding hazardous waste.

1.10 PAINT WASTE

A. Clean water-based and oil-based paint from brushes or equipment within a contained area in a way that does not contaminate soil, receiving waters, or storm drain systems. Handle and dispose of the following as hazardous waste: paints, thinners, solvents, residues, and sludges that cannot be recycled or reused. When thoroughly dry, dispose of the following as solid waste: dry latex paint, paint cans, used brushes, rags, absorbent materials, and drop cloths.

1.11 CONCRETE WASTE

A. Use practices to prevent the discharge of asphalt concrete, PCC, and HMA waste into storm drain systems and receiving waters.

B. Collect and dispose of asphalt concrete, PCC, and HMA waste generated at locations where:

1. Concrete material, including grout, is used

2. Concrete dust and debris result from demolition
3. Sawcutting, coring, grinding, grooving, or hydro-concrete demolition creates a residue or slurry
4. Concrete trucks or other concrete-coated equipment is cleaned at the job site

1.12 SANITARY AND SEPTIC WASTE

A. Do not bury or discharge wastewater from a sanitary or septic system within the highway.

B. A sanitary facility discharging into a sanitary sewer system must be properly connected and free from leaks.

C. Place a portable sanitary facility at least 50 feet away from storm drains, receiving waters, and flow lines.

D. Comply with local health agency provisions if using an on-site disposal system.

1.13 LIQUID WASTE

A. Use practices that will prevent job-site liquid waste from entering storm drain systems and receiving waters.

B. Liquid waste include the following:

1. Drilling slurries or fluids
2. Grease-free and oil-free wastewater and rinse water
3. Dredgings, including liquid waste from cleaning drainage systems
4. Liquid waste running off a surface, including wash or rinse water
5. Other nonstormwater liquids not covered by separate permits

C. Hold liquid waste in structurally sound, leak-proof containers, such as roll-off bins or portable tanks.

D. Liquid waste containers must be of sufficient quantity and volume to prevent overflow, spills, and leaks.

E. Store containers at least 50 feet from moving vehicles and equipment.

F. Remove and dispose of deposited solids from sediment traps unless the Engineer approves another method.

G. Liquid waste may require testing to determine hazardous material content before disposal.

H. Dispose of drilling fluids and residue.

I. If a location approved by the Engineer is available within the job site, fluids and residue exempt under 23 CA Code of Regs § 2511(g) may be dried by evaporation in a leak-proof container. Dispose of the remaining as solid waste.

END OF SECTION

SECTION 013530

HEALTH AND SAFETY PLAN

PART 1 - GENERAL

1.1 SUMMARY

A. This work includes preparing, submitting, and implementing a detailed Health and Safety Plan that addresses the health and safety of all field personnel, including State personnel.

B. The plan must identify potential health and safety hazards associated with existing hazardous substances and specifies work practices that must be used to protect workers from those hazards in conformance with the Department of Toxic Substances Control and CAL-OSHA regulations. At a minimum, the Health and Safety Plan must:

1. Identify key site safety personnel
2. Describe risks associated with the work
3. Describe training requirements
4. Describe appropriate personal protective equipment
5. Describe any site-specific medical surveillance requirements
6. Describe any periodic air monitoring requirements
7. Define appropriate site work zones
8. Describe any decontamination requirements

C. The Health and Safety Plan must be submitted at least 15 business days before beginning work that may expose personnel to hazardous substances for review and acceptance by the Engineer. Before submittal, you must have the Health and Safety Plan approved by an industrial hygienist certified by the American Board of Industrial Hygiene.

1.2 SAFETY TRAINING

A. Before performing work that may expose personnel to hazardous substances, all personnel, including State personnel, must complete a safety training program that communicates the potential health and safety hazards associated with work on the site and instructs the personnel in procedures for doing the work safely.

B. The level of training provided must be consistent with the personnel's job function and conform to CAL-OSHA regulations.

C. Do not start safety training until the Health and Safety Plan is accepted by the Engineer.

D. Provide subsequent refresher training required until completion of the project.

E. Provide a certification of completion of the safety training program to all personnel who successfully complete the training.

F. Provide personal protective equipment required by State personnel to inspect the work.

G. The number of State personnel requiring the above mentioned safety training program and personal protective equipment is 5.

END OF SECTION

SECTION 017420

HANDLING, TRANSPORTATION, AND DISPOSAL OF CONTAMINATED MATERIAL

PART 1 - GENERAL

1.1 SUMMARY

A. This work includes temporary storage, confirmation testing, transportation, and disposal of contaminated material. Comply with Section 19, "Earthwork," of the Standard Specifications. Test results used to determine the nature and extent of contaminated material are provided as described in "Supplemental Project Information," of these special provisions.

1.2 DEFINITIONS

A. **Class II waste**: Contaminated material that is not regulated as a hazardous waste but requires handling as a designated waste under Water Code § 13173. Designated as roadway excavation (Class II). Does not include rock or pavement.

B. **Resource Conservation and Recovery Act (RCRA):** Federal law that provides guidelines for managing solid waste.

C. **Non-RCRA hazardous waste:** Contaminated material regulated as a hazardous waste under California law but not under RCRA. Also known as California hazardous waste. Designated as roadway excavation (Type H). Does not include rock or pavement.

1.3 SUBMITTALS

A. Work Plan: At least 20 days before starting clearing and grubbing or earthwork at the job site, submit a workplan that includes:

1. Schedule of activities
2. Method of excavation and equipment to be used
3. Dust control procedures
4. Storage methods and locations for contaminated material
5. Haul routes
6. Spill contingency plan

The Engineer reviews the work plan within 15 days. Resubmit required revisions within 5 days. Do not start clearing and grubbing or earthwork until the plan is approved by the Engineer. No adjustment for time or money is made if resubmittals of the work plan are required due to deficiencies in the plan.

B. **Waste Disposal Documents**: Submit a disposal facility waste disposal request for the Engineer's signature. Before transporting hazardous waste, submit a copy of the transporter's valid hazardous waste transporter registration. Submit completed waste shipment forms and disposal facility weight tickets within 35 days after shipment. The Department withholds payment until the completed forms are submitted.

C. **Sampling and Analysis Plan:** At least 20 days before starting material sampling, submit a sampling and analysis plan (SAP). The SAP must be signed by a California registered professional engineer or California registered professional geologist experienced in contaminated site characterization. The SAP must include:

1. Purpose and scope of the investigation, including:
    a. Additional disposal facility requirements
    b. Reclassification of material
    c. Characterization of material outside of the excavation pay limits
2. Sampling locations and methods
3. Analytical methods

4. Name, address, and Environmental Laboratory Accreditation Program certification number of the testing laboratory
5. Quality assurance/quality control procedures

D. Base the sampling and analysis procedures on guidelines in:

1. USEPA, SW 846, "Test Methods for Evaluating Solid Waste, Volume II: Field Manual Physical/Chemical
2. Methods"
3. ASTM, D 1452, "Soil Investigation and Sampling by Auger Borings"
4. ASTM, D 1586, "Penetration Test and Split-Barrel Sampling of Soils"
5. ASTM, D 1587, "Thin-Walled Tube Sampling of Soils for Geotechnical Purposes"
6. ASTM, D 6282-98(2005), "Standard Guide for Direct Push Soil Sampling for Environmental Site Characterizations"

The Engineer reviews the SAP within 15 days. Resubmit required revisions within 5 days. Do not start sampling until the plan is approved by the Engineer. No adjustment for time or money is made if resubmittals of the SAP are required due to deficiencies in the plan.

1.4 QUALITY CONTROL AND ASSURANCE

A. **Regulatory Requirements**: Laws and regulations that govern this work include:

1. Health and Safety Code, Div 20, Ch 6.5 (California Hazardous Waste Control Act)
2. 22 CA Code of Regs, Div 4.5 (Environmental Health Standards for the Management of Hazardous Waste)
3. 8 CA Code of Regs
4. Water Code § 13173

B. **Permits and Licenses**: Obtain all permits and licenses, pay all charges and fees, and give all notices necessary and incident to the due and lawful prosecution of the work, including registration for transporting vehicles carrying hazardous waste, under Section 7-1.04, "Permits and Licenses," of the Standard Specifications.

C. For hazardous waste disposal, the Engineer obtains the Environmental Protection Agency generator identification number and Board of Equalization identification number and signs all manifests as the generator.

D. Notify the Engineer at least 5 days before starting waste transport and at least 24 hours before subsequent loads when there is a break in hauling of more than 5 days.

PART 2 - CONSTRUCTION

A. Apply water to control dust at all times while performing clearing and grubbing or earthwork activities in work areas containing contaminated material. Apply water under Section 17, "Watering," of the Standard Specifications.

B. Excavation, transportation, storage, and handling of contaminated material must result in no visible dust migration off the job site.

C. Prevent mixing of contaminated material with uncontaminated material. No additional payment is made for material requiring reclassification because of failure to segregate the material after excavation.

D. Characterization and disposal of additional material from excavations performed outside of the pay limits are included in the contract price for excavation. Assume the material has the same handling, transportation and disposal requirements as adjacent material. Furnish replacement material suitable for the planned use under Section 19, "Earthwork," of the Standard Specifications.

E. Use material excavated to install individual (not duct bank) electrical and irrigation conduits to backfill the trenches.

2.1 TEMPORARY STORAGE

A. Transfer contaminated material directly from the excavation to any of the following:

1. Transport vehicles
2. Storage containers
3. Stockpile locations approved by the Engineer

B. Construct stockpile locations as follows:
1. The stockpiled material must not contain free liquids that separate readily.
2. Furnish and place undamaged chemically resistant geomembrane liners.
    a. Non-reinforced liner must be at least 20-mil thick.
    b. Scrim-reinforced liner must have a minimum weight of 40 lbs/1000 square feet.
3. Furnish and place undamaged geomembrane covers.
    a. Non-reinforced liner must be at least 10-mil thick.
    b. Scrim-reinforced liner must have a minimum weight of 26 lbs/1000 square feet.
4. The dimensions of the geomembrane must exceed the dimensions of the stockpile at all times.
5. Seal the seams in multiple geomembrane liners to prevent leakage.
6. Cover stockpiles at the end of each day or before storm events to prevent windblown dispersion and precipitation run-off and run-on.
7. If more than one sheet is required to cover the material, overlap the sheets a minimum of 1.5 feet.
8. Secure the cover to keep it in place. Do not use driven anchors except at the perimeter of the stockpile. Inspection and maintenance must comply with "Water Pollution Control" of these special provisions.

C. These stockpiling requirements apply to temporary storage outside of an excavation or a transport container including:

1. Staging of excavated material next to the excavation before pick up by loading equipment
2. Accumulating material for full transport loads
3. Awaiting test results required by a disposal facility

Start removing storage containers and stockpiles containing hazardous waste within 90 days of accumulating any quantity of material. After final removal has occurred, complete any cleanup required by the Engineer.

2.2 SAMPLING AND ANALYSIS

A. Test the material for any additional acceptance requirements requested by the disposal facility or for confirmation of classifications specified on the plans or in the special provisions. Use sampling and analysis procedures approved by the Engineer and the disposal facility. Prepare and submit a sampling and analysis plan before starting any tests.

B. The Engineer makes the final decision on reclassification or characterization of material after review of the test results. Allow 5 business days for review of test results. Changes in classification of materials will comply with Section 4-1.03, "Changes," of the Standard Specifications.

2.3 TRANSPORTATION

A. Prepare a non-hazardous waste manifest or other shipping form for each load of Class II waste. Prepare a uniform hazardous waste manifest for each load of hazardous waste using the appropriate waste code. Transport hazardous waste using a transporter registered with the Department of Toxic Substances Control.

B. Cover the cargo during transport to prevent spillage or dust release. You agree to indemnify the State from any cost or liability due to spillage during transport of contaminated material to a disposal facility.

2.4 DISPOSAL

A. Dispose of contaminated material as follows:

1. Roadway excavation (Class II) – Haul and dispose of the material at a permitted Class II waste management facility.
2. Roadway excavation (Type H) – Haul and dispose of the material at a permitted non-RCRA hazardous waste management facility.

B. Dispose of hazardous waste within California at a disposal site operating under a permit issued by the Department of Toxic Substances Control.

C. Obtain waste disposal approval from the appropriate disposal facility. Type H material is eligible for an exemption from the Board of Equalization disposal fees as provided under Health and Safety Code §§ 25174.1 and 25174.7. Request a letter of exemption from the Engineer at least 5 days before transporting Type H material from within these limits to a disposal facility.

END OF SECTION

SECTION 024100

DEMOLITION

PART 1 - GENERAL

1.01 SECTION INCLUDES

A. Permits.

B. Site conditions.

C. Materials, equipment, and facilities.

D. Preservation of reference markers.

E. Demolition.

F. Removal.

G. Salvage.

H. Disposal of removed materials and debris.

1.02 RELATED SECTIONS

A. Removal of vegetation and trees is specified in Section 31 11 00, Clearing and Grubbing.

1.03 REFERENCES

A. American National Standards Institute (ANSI):

1. ANSI A10.6 Safety Requirements for Demolition Operations

B. State of California, Department of Transportation (Caltrans), Standard Specifications, Section 15, Existing Highway Facilities.

1.04 REGULATORY REQUIREMENTS

A. In addition to the foregoing referenced standards, the regulatory requirements that govern the work of this Section include the following governing codes:

1. California Code of Regulations (CCR), Title 8, Chapter 4, Subchapter 4 – Construction Safety Orders.

2. California Code of Regulations (CCR), Title 24, Part 2, California Building Code, Chapter 33, “Site Work, Demolition and Construction.”

1.05 DESCRIPTION

A. Demolition as follows:

1. Buildings and structure foundations, footings, and foundation systems shall be completely removed.

2. Utility services to facilities to be removed or demolished shall be disconnected, cut, and capped.

B. Removal of at-grade structures, such as existing pavements, curbs, gutters, sidewalks, and designated utility structures.

1.06 PERMITS

A. The Contractor shall obtain all special permits and licenses and give all notices required for performance and completion of the demolition and removal work, hauling, and disposal of debris.

1.07 SUBMITTALS

A. General: Submit in accordance with Section 5-1.01, “Working Drawings”, of Special Provisions.

B. Demolition Plan: Submit a comprehensive demolition plan, describing the proposed sequence, methods, and equipment for demolition, removal, and disposal of structure(s); include salvage if required. Do not proceed with demolition until the Engineer has given written approval of the demolition plan.

1. Shop Drawings: Include drawings in plan of all structures to be demolished. Indicate stages or phases of the demolition work.

C. Permits: Submit copies of demolition, hauling, and debris disposal permits and notices for record purposes. Include description of proposed haul routes.

D. Utility Severance Certificates: Provide certificates, issued by the utility owners, of severance of utility services for record purposes.

E. Private Property Owner's Release: If material demolished and removed from the site will be deposited on private property, submit two copies of written releases not more than 15 days before the start of work. Releases shall absolve the District from responsibility in connection with the depositing of material on private property, and shall be signed by the owners of such property on which the material will be deposited.

F. Record Documents: Provide copies of all approved submittals, specified herein, for record purposes in accordance with the requirements of Section 10-3.20, “Closeout Submittal” of Special Provisions

1.08 SITE CONDITIONS

A. Protection of Persons and Property:

2. Erect and maintain temporary bracing, shoring, lights, barricades, signs, and other measures as necessary to protect the public, workers, and adjoining property from damage from demolition work, all in accordance with applicable codes and regulations.

3. Open depressions and excavations occurring as part of this work shall be barricaded and posted with warning lights when accessible through adjacent property or through public access. Operate warning lights during hours from dusk to dawn each day and as otherwise required.

4. Protect utilities, pavements, and facilities from damage caused by settlement, lateral movement, undermining, washout, and other hazards created by demolition operations.

5. Contractor should not store material or operate vehicles within 15 feet of EBMUD outfall centerline, located near south fence line.

B. Protection of Utilities:

1. Protect active sewer, water, gas, electric, and other utilities; and drainage and irrigation lines indicated or, when not indicated, found or otherwise made known to the Contractor before or during demolition work. If utility is damaged, immediately notify the utility owner for corrective action.

2. Arrange with and perform work required by utility companies and municipal departments for discontinuance or interruption of utility services due to demolition work.

C. Noise and Dust Abatement: Comply with requirements specified in Section 14 “Environmental Stewardship” of the State California Standard Specifications:

1. Provide continuous noise and dust abatement as required to prevent disturbance and nuisance to the public and workers and to the occupants of adjacent premises and surrounding areas. Dampen or cover areas affected by demolition operations as necessary to prevent dust nuisance.

2. When a certain level of noise is unavoidable because of the nature of the work or equipment involved, and such noise is objectionable to the occupants of adjacent premises, make arrangements with the jurisdictional authorities to perform such work or operate such equipment at the most appropriate time periods of the day.

D. Unknown Conditions:

1. The Contract Drawings and related documents may not represent all surface conditions at the site and adjoining areas. The known surface conditions are as indicated, and shall be compared with actual conditions before commencement of work.

2. Existing utilities and drainage systems below grade are located from existing documents and from surface facilities such as manholes, valve boxes, area drains, and other such surface fixtures.

3. If existing active services encountered are not indicated or otherwise made known to the Contractor and interfere with the permanent facilities under construction, notify the Engineer in writing, requesting instructions on their disposition. Take immediate steps to ensure that the service provided is not interrupted, and do not proceed with the work until written instructions are received from the Engineer.

4. Thickness of existing pavements are from previous construction documents, and do not imply the actual depth or thickness of the total pavement or base material, where it occurs. Remove pavement of whatever thickness as required.

PART 2 - PRODUCTS

2.01 MATERIALS, EQUIPMENT, AND FACILITIES

A. The Contractor shall furnish all materials, tools, equipment, devices, appurtenances, facilities, and services as required for performing the demolition and removal work.

B. Materials used for backfill shall conform to the requirements for backfill of Section 31 00 00, Earthwork.

PART 3 - EXECUTION

3.01 PRESERVATION OF REFERENCE MARKERS

A. Record the locations and designation of survey markers and monuments prior to their removal. Provide three reference points for each survey marker and monument removed, established by a licensed civil engineer or land surveyor currently registered in the State of California.

B. Store removed markers and monuments during demolition work, and replace them upon completion of the work. Re-establish survey markers and monuments in conformance with the recorded reference points. Forward to the Engineer a letter verifying re-establishment of survey markers and monuments, signed by a licensed civil engineer or land surveyor currently registered in the State of California.

3.02 DEMOLITION

A. Perform demolition in accordance with the approved Demolition Plan. Perform demolition work in accordance with ANSI A10.6 and the California Code of Regulations, Title 8 and Title 24, as applicable.

B. Cap or plug sanitary sewer in accordance with the utility owner's standard details and instructions. Cap and plug pipe and other conduits abandoned due to demolition, with approved type caps and plugs as required by the utility owners.

C. Backfill and compact depressions caused by excavations, demolition, and removal in accordance with applicable requirements of Section 31 00 00,Earthwork.

3.03 REMOVAL

A. Remove existing pavements, structures, and site improvements that interfere with new construction, where demolition is not indicated. Coordinate as required with the work of Section 31 11 00, Clearing and Grubbing.

B. Slabs may be broken for drainage and left in place where they are below grade and are not detrimental to the structural integrity of the fill or structure to be placed above, as determined by the Engineer.

3.04 OBLITERATE

A. Obliterate existing pavement as described on plans in accordance with State of California, Department of Transportation (Caltrans), Standard Specifications, Section 15, Existing Highway Facilities.

3.05 SALVAGE

A. Items or materials to be salvaged shall be as indicated on the Contract Drawings and in the Contract Specifications.

B. Protect metallic coatings on salvaged items. Remove adhering concrete from salvaged items.

C. Repair, or replace with new material, salvaged material damaged or destroyed due to Contractor's negligence, as determined by the Engineer.

3.06 DISPOSAL OF REMOVED MATERIALS AND DEBRIS

A. Dispose of removed materials, waste, trash, and debris in a safe, acceptable manner, in accordance with applicable laws and ordinances and as prescribed by authorities having jurisdiction.

B. Burying of trash and debris on the site will not be permitted. Burning of trash and debris at the site will not be permitted.

C. Remove trash and debris from the site at frequent intervals so that their presence will not delay the progress of the work or cause hazardous conditions for workers and the public.

D. Removed materials, trash, and debris shall become the property of the Contractor and shall be removed from the District's property and disposed of in a legal manner. Location of disposal site and length of haul shall be the Contractor's responsibility.

3.07 CLEANUP

A. Provide a clean and orderly site at all times in accordance with Section 4.1.02, “Final Cleaning Up” of Standard Specifications.

END OF SECTION 02 41 00

This Page Not Used

SECTION 03 11 00

CONCRETE FORMING

PART 1 - GENERAL

1.01 SECTION INCLUDES

A. Layout of formwork.

B. Formwork construction.

C. Embedded items and openings in concrete.

D. Form release materials.

E. Removal of forms.

F. Field quality control.

G. Detection of movement.

H. Re-use of forms.

1.02 RELATED SECTIONS

A. Finishes for formed surfaces are specified in Section 03 35 00, Concrete Finishing.

1.03 REFERENCES

A. American Concrete Institute (ACI):

1. ACI 117 Standard Specifications for Tolerances for Concrete Construction and Materials
2. ACI 301 Standard Specifications for Structural Concrete
3. ACI 318 Building Code Requirements for Structural Concrete
4. ACI 347 Formwork for Concrete

B. American Plywood Association (APA):

1. U.S. Product Standard PS 1 for Construction and Industrial Plywood

C. Federal Specifications (FS):

1. TT-S-230 Sealing Compound: Elastomeric Type, Single Component, (for Calking, Sealing, and Glazing in Buildings and Other Structures)
2. TT-S-1543 Sealing Compound: Silicone Rubber Base (For Calking, Sealing, and Glazing in Buildings and Other Structures)

D. West Coast Lumber Inspection Bureau (WCLB):

1. WCLB No. 17 Standard Grading Rules

1.04 QUALITY ASSURANCE

A. Formwork Standards: Unless otherwise indicated, design, construct, erect, maintain, and remove forms and related structures for concrete work in accordance with applicable requirements of ACI 301, ACI 318, and ACI 347.

1. Architectural Concrete: Forms for architectural concrete shall be designed and constructed in accordance with ACI 301.

2. Deflection: Where dead and live loads on forms will be more than 20 percent greater than the weight of the concrete, provide framing lumber of required strength, and comply with ACI 301 and ACI 347 for design of framing members. Deflection shall be kept within the herein specified tolerances.

3. Concrete Mix Design: Design of formwork shall be coordinated with the concrete mix design, as specified in California Department of Transportation (Caltrans), Standard Specifications (2010), Section 90, Concrete, so that form materials, form surfaces, and formwork strength will produce the desired concrete tolerances and finishes.

B. Formwork Surface Materials: Provide material and work quality which will produce clean and uniform finished surfaces within the allowable tolerances specified and which will conform with the following requirements:

1. Concrete Exposed to View: Provide material and work quality that will produce clean, smooth, and uniform concrete surfaces. Refer to Section 03 35 00, Concrete Finishing, and ACI 301 for requirements.

2. Concrete Concealed from View: Provide material and work quality that will produce aligned concrete surfaces free of fins, honeycomb, and stains.

C. Special Formwork Sections: Provide openings, offsets, sinkages, keyways, recesses, moldings, rustication strips, chamfers, blocking, screeds, bulkheads, anchorages, embedded items, and other features. Select materials and provide workmanship that will ensure indicated finishes.

D. Chamfered Corners: All external corners shall be chamfered, unless otherwise indicated.

E. Removal Features: Design formwork to be readily removable without impact, shock, and damage to concrete surfaces and adjacent materials.

F. Tolerances for Formed Surfaces: For buildings and similar structures, comply with the requirements of ACI 301, as applicable. For those items of work or parts of the structure not covered by ACI 301, comply with the requirements of ACI 117, as applicable. Coordinate with the requirements specified in California Department of Transportation (Caltrans), Standard Specifications (2010), Section 90, Concrete.

1.05 SUBMITTALS

A. General: Refer to California Department of Transportation (Caltrans), Standard Specifications (2010), Section 5, Control of Work for submittal requirements and procedures.

B. Shop Drawings: Submit drawings that indicate and include the following details and requirements:

1. Forming system and method of erection with associated details.

2. Shoring accompanied by design calculations. Include reshoring procedures. Both drawings and calculations shall be signed by an engineer who is currently registered as a civil or structural engineer in the State of California.

3. Locations of construction joints in plan and elevation views.

4. Locations and sizes of conduits, openings, recesses, pipes, ducts, and other attached or embedded products.

5. Beam intersections and other conditions where concrete casting by vertical drop may be restricted.

6. Chamfer strips for corner treatment.

7. Method and schedule for removing forms and shoring.

8. Method for detecting formwork movement during concrete placement.

C. Product Data: Submit manufacturers' product data for manufactured products.

D. Samples: Submit form material, 12 inches by 12 inches or larger in size, for formed concrete which will be exposed in the finished work to public view. Such samples require approval of the Engineer before they may be used in the work.

1.06 DELIVERY, STORAGE, AND HANDLING

A. Storage: Store form panels to prevent warpage. Protect panels from damage and contamination which could adversely affect concrete.

B. Handling: Lift form panels by methods that will protect panels from damage and distortion.

1.07 JOB CONDITIONS

A. Allow sufficient time between erection of forms and placing of concrete for the various trades to properly install concrete reinforcement, embedded items, sleeves, and blockouts.

B. Do not apply superimposed loads to the structure until concrete has developed its specified 28-day compressive strength.

PART 2 - PRODUCTS

2.01 MATERIALS

A. Lumber: Boards and framing lumber shall be graded and grade-marked in accordance with WCLB No. 17. Provide framing lumber of required strength, conforming with the above-specified WCLB No. 17.

1. Boards: Provide all West Coast Species, "Construction" or "Standard" Boards. Use dressed side of lumber for surface in contact with the concrete, and provide boards with dressed or tongue-and-groove edges to provide tight joints to prevent mortar leakage.

2. Framing Lumber:

a. Light Framing: Provide all West Coast Species, "Construction" or "Standard" Light Framing, dressed or rough. Where loads are not a factor, "Utility" Light Framing will be acceptable.

b. Joists and Planks: Provide all West Coast Species, "No. 2" Structural Joists and Planks, dressed or rough.

c. Beams and Stringers: Provide all West Coast Species, "Standard" Beams and Stringers or "No. 2 Structural" Beams and Stringers, dressed or rough.

B. Plywood (Plyform): Plywood shall be graded and grade-marked in accordance with U.S. Product Standard PS-1.

1. B-B Plyform: Provide Class I, EXT-APA, sanded, APA trade marked.

2. B-C Plyform: Provide Class I, EXT-APA, APA trade marked.

3. High Density Overlay (HDO) Plyform: Provide A-A, 60-60, Class I, EXT-APA, APA trade marked.

4. Thickness: As required to maintain surface smoothness without deflection, but not thinner than 5/8 inch.

C. Steel Forms: Proprietary, patented, or fabricated steel forms, using standard or commercial quality, uncoated steel sheet or plate, 3/16-inch minimum thickness, for panel facings. Provide surfaces that will not impart corrosion residue to concrete. Include panel framing, reinforcement, and erection accessories.

D. Waffle Slab Forms: Steel or reinforced plastic dome forms for two-way joist construction, smooth surface, of sizes indicated.

E. Round Column Forms: Pressed or molded fiber-reinforced plastic or steel, manufactured round column forms, seamless or one-piece (one vertical seam), smooth surface, of sizes indicated.

1. Provide forms with will not deflect under pressure of concrete placement, and which will not deflect or blow off under added pressure of placement of fly-ash-modified concrete.

F. Formliners for Exposed and Architectural Concrete: Thermally formed, pressed or molded fiber-reinforced plastic (FRP), ABS alloy plastic, PVC alloy plastic, or similar material, manufactured to produce finished concrete of design, configuration, and surface texture indicated. Formliners shall be continuous, one piece. No horizontal joints shall be acceptable unless the applicable height exceeds the available formliner height. Provide formliners with inherent form-release surface. Formliners may be manufactured for single-use or multi-use service as appropriate.

G. Leakage Control Materials: Provide materials capable of producing flush, watertight, and nonabsorbent surfaces and joints, and compatible with forming material and concrete ingredients. Seal form edges with gasketing material or sealant placed in the joint in such a way that neither a fin nor groove is made in the face of the cast concrete.

1. Calking Compound: Silicone or polyurethane construction sealant conforming to FS TT-S-230 or TT-S-1543, as applicable.

2. Tapes: Form film tape of polypropylene plastic treated with waterproof adhesive, for joint conditions not exposed to public view.

H. Form Release Agent: Commercial formulation, silicone-free form-release agent, designed for use on all types of forms, which will not bond with, stain, nor adversely affect concrete surfaces, and which will not impair subsequent treatment of concrete surfaces requiring bond or adhesion nor impede wetting of surfaces which will be cured with water, steam, or curing compounds.

I. Plugged Cone Form Ties: Rod type, with ends or end fasteners which can be removed without spalling the concrete and which leave a hole equal in depth to the required reinforcement clearance. Form ties shall be of a design in which the hole left by the removed end or end fastener is easily filled to match the surface of the hardened concrete. Provide removable cones 1-1/4 inches in diameter by 1-1/2 inches deep. Provide preformed mortar plugs to match the color of the concrete, recessed 1/4 inch, adhered with an approved epoxy adhesive.

J. Inserts: Cast stainless steel or welded stainless steel, Type 316 or similar 300 Series, complete with anchors to concrete and fittings such as bolts, wedges, and straps. Provide hanger inserts spaced to match grid of suspended ceiling.

K. Dovetail Anchor Slots: 22 gage or heavier galvanized steel dovetail anchor slots, for anchoring of masonry veneer with galvanized steel dovetail anchors provided under Division 4, Masonry.

L. Chamfer Strips: 3/4 inch by 3/4 inch triangular fillets milled from clear, straight-grain pine, surfaced each side, or extruded vinyl type with or without nailing flange.

M. Miscellaneous Joint Strips: Preformed strips for reveals, rustications, and similar joints fabricated of wood, metal, or plastic.

2.02 FABRICATION

A. Formwork - General: Fabricate forms in accordance with approved Shop Drawings. Maintain forms clean, smooth, and free from imperfections and distortion. Fabricate forms for architectural concrete in accordance with applicable requirements of ACI 301.

B. Joints:

1. Arrange form panels in symmetrical patterns conforming to general lines of the structure.

2. Unless otherwise indicated, orient panels on vertical surfaces with long dimension horizontal, and make horizontal joints level and continuous.

3. Align form panels on each side of the panel joint with fasteners common to both panels, and in a manner which will result in a continuous, unbroken concrete plane surface.

C. Steel Forms: Use material which is clean, smooth, and free from warps, bends, kinks, rust, cracks, and matter which may stain concrete. Fabricate panels in accordance with approved Shop Drawings. Deflection between form supports from concrete placement shall not exceed 1/240 of the span length.

PART 3 - EXECUTION

3.01 LAYOUT OF FORMWORK

A. Locate and stake out all forms and establish all lines, levels, and elevations.

3.02 CONSTRUCTION

A. Formwork:

1. Construct formwork in accordance with the approved Shop Drawings, and in a manner that will produce finished concrete surfaces conforming to indicated design and within specified tolerances. Formwork for concrete not exposed to view in the finished work may be constructed of any material that will adequately support the weight of the concrete.

2. Make joints and seams mortar-tight. Install leakage control materials in accordance with the manufacturer's installation instructions, and in a manner that will maintain a smooth continuity of plane between abutting form panels and which will resist displacement by concreting operations.

3. Kerf wood inserts for forming keyways, reglets, and recesses in a manner that will prevent swelling and ensure ease of removal.

4. Maintain forms clean and free from indentations and warpage. Do not use rust-stained steel surfaces for forms in contact with concrete. Do not sandblast steel form surfaces to remove rust or mill scale; remove these imperfections by grinding.

5. Brace temporary closures to prevent warpage or displacement and set tightly against forms in a manner that will prevent loss of concrete mortar.

6. Support joints with extra studs or girts, and in a manner that will ensure true, square intersections.

7. Assemble forms in a manner that will facilitate their removal without damage to the concrete.

8. Construct molding shapes, recesses, and projections with smooth finish materials and install in forms with sealed joints.

9. Provide camber in formwork as required to compensate for deflections caused by weight and pressures of fresh concrete and construction loads and as otherwise indicated. Provide camber strips to compensate for deflections due to permanent loads and long-term deflections due to shrinkage and creep as required.

10. Provide construction openings in forms where required for concrete pour pockets, vibrator access holes, and inspection openings to aid in proper placement and consolidation of concrete, and close up openings during placement of concrete as applicable.

11. Provide inspection and cleanout openings in forms at bottom of walls and columns and elsewhere as required. Do not close cleanouts until inspected and accepted by the Engineer just before placing concrete.

12. Drill air escape holes in bottom members of blockouts.

13. Ensure that formed stair risers within a stair run are equal.

B. Edge Forms and Screeds for Slabs: Set edge forms or bulkheads and intermediate screeds for slabs to obtain required elevations and contours in the finished slab surface. Support screeds substantially without penetrating waterproof membranes and vapor barriers.

C. Corner Treatment: Form chamfers with 3/4 inch on each leg, unless otherwise indicated, and accurately shape and surface in a manner which will produce uniformly straight lines and edge joints and which will prevent mortar runs. Extend terminal edges to limits, and miter chamfer strips at changes in direction.

D. Construction Joints:

1. Locate joints as indicated. Support forms for joints in concrete so as to rigidly maintain their positions during placement, vibration, and curing of concrete. Install keys in all joints.

2. Locate and install construction joints, for which locations are not indicated, so as not to impair strength and appearance of the structure, and indicate such joints on Shop Drawings. Locations of construction joints require approval of the Engineer.

3. Position joints perpendicular to longitudinal axis of pier, beam, or slab as the case may be.

4. Locate joints in walls, vertically as indicated; at top of footing; at top of slabs on grade; at bottom of door openings; and at underside of the deepest beam or girder framing into wall; or as required to conform to indicated details.

5. Provide keyways as indicated in construction joints in walls and slabs, and between walls and footings unless otherwise indicated. Place construction joints perpendicular to the main reinforcement. Continue reinforcement across construction joints.

E. Load Supports: Loads for construction of roof slab and suspended floor slabs shall be carried down to on-grade base slabs. These loads shall not be carried by intermediate slabs at any time. Formwork loads shall be carried only by structural elements that are supported directly by footings.

3.03 EMBEDDED ITEMS AND OPENINGS IN CONCRETE

A. Install conduit, pipe sleeves, waterstops, appliance boxes, frames for items recessed in walls, door frames, drains, metal ties, inserts, nailing strips, blocking, grounds, and other fastening devices required for anchorage or attachment of other work. Firmly secure products in position, located accurately as indicated, before beginning concrete placement.

B. Provide openings in concrete for passage of ducts, and provide clearances therefor as indicated on approved Shop Drawings.

C. Where masonry walls will be tied to concrete construction in future construction, use dovetail anchor slots positioned for maximum flexibility for masonry installation.

3.04 FORM RELEASE MATERIAL

A. Coat form contact surfaces with approved form release material before reinforcement is placed. Do not allow excess form release material to accumulate in the forms or to come into contact with surfaces that are required to be bonded to fresh concrete such as concrete reinforcement and embedded items. Apply form release material in compliance with manufacturer's application instructions.

B. Coat steel forms with non-staining, rust-preventive form release material or otherwise protect against rusting.

C. Apply form release material to bolts and rods that are to be removed or that are to be free to move.

3.05 REMOVAL OF FORMS

A. Remove forms by methods which will not injure, mar, gouge, or chip concrete surfaces, overstress concrete members, or distort formwork. Use air pressure or other approved methods. Do not pry against concrete. Cut off nails flush. Leave surfaces clean and unblemished.

1. Where early form removal is not necessary and will not impact the Contractor's schedule, leave forms in place at least 72 hours, unless otherwise approved by the Engineer.

B. When repair of surface defects or finishing is required at an early age, forms may be removed as soon as the concrete has hardened sufficiently to resist damage from removal operations and its own weight.

1. Concrete work that is damaged by removal operations shall be repaired as specified in Section 03 35 00, Concrete Finishing. Where exposed surfaces are damaged beyond acceptable repairing measures, the damaged concrete shall be removed and replaced with new concrete.

C. Top forms on sloping surfaces of concrete may be removed as soon as the concrete has attained sufficient stiffness to prevent sagging. Any needed repairs or treatment required on such sloping surfaces shall be performed at once and shall be followed by the specified curing.

D. Wood forms for wall openings shall be loosened as soon as this can be accomplished without damage to the concrete.

E. Formwork for columns, walls, sides of beams, and other parts not supporting the weight of the concrete may be removed as soon as the concrete has hardened sufficiently so as not to be damaged by removal operations.

F. Forms and shoring in the formwork used to support the weight of concrete in beams, suspended slabs, girders, and other structural members shall remain in place until the concrete has reached adequate strength and stiffness to support itself. Forms shall not be removed before the concrete has reached a minimum of 70 percent of the indicated design compressive strength, unless otherwise approved in writing by the Engineer.

G. When shores and other vertical supports are so arranged that the non-load-carrying form-facing material may be removed without loosening or disturbing the shores and supports, the facing material may be removed at an earlier age provided the concrete surfaces are not damaged by such earlier removal.

H. Plan reshoring operations in a manner that will ensure that areas of new construction will not be required to support their own weight. Reshoring shall be in place before shoring is removed. During reshoring, do not permit live loads on new construction. Do not locate reshores in a manner and location that will overstress members or induce tensile stresses where reinforcing bars have not been provided.

I. When removal of formwork or reshoring is based on the concrete reaching a specified strength, the concrete shall be presumed to have reached this strength when test cylinders, field cured along with the concrete they represent, have reached the strength specified for removal of formwork or reshoring. Except for the field curing and age at test, the cylinders shall be molded and tested as specified in California Department of Transportation (Caltrans), Standard Specifications (2010), Section 90, Concrete.

3.06 FIELD QUALITY CONTROL

A. Before placing concrete, check lines and grades of erected formwork and positioning of embedded inserts, blockouts, and joints for correctness. Verify that embedded piping and conduit are free from obstructions. Make corrections or adjustments to ensure proper size and location of concrete members and stability of forming systems.

B. While placing concrete, provide quality control to assure that formwork and related supports have not been displaced, that loss of cement paste through joints is prevented, and that completed work will be within specified tolerances.

C. During form removal, verify that architectural features meet the form and texture requirements of the samples approved by the Engineer.

3.07 DETECTION OF MOVEMENT

A. Check movement using methods, such as plumb lines, tell tales, and survey equipment, to detect movement of formwork during concrete placement.

3.08 RE-USE OF FORMS

A. Clean and repair surfaces of forms to be reused in the work. Split, frayed, delaminated, or otherwise damaged form facing material will not be acceptable. Remove such material from the site. Apply form release coating as specified for new formwork.

B. Align and secure joints in a manner that will preclude offsets. Do not use patched forms for exposed concrete surfaces.

END OF SECTION

SECTION 03 15 00

CONCRETE ACCESSORIES

PART 1 - GENERAL

1.01 SECTION INCLUDES

A. Joint fillers.

B. Joint sealing compound.

C. Elastomeric joint seals.

D. Plastic pads, spacers, and fillers.

1.02 RELATED SECTIONS

A. Metal stair nosings, armor protection for concrete edges, metal anchors, inserts, sleeves, and various metal accessories related to cast-in-place concrete work are specified in California Department of Transportation (Caltrans), Standard Specifications (2010), Section 75, Miscellaneous Metal.

B. Calking and sealants related to the sealing of openings in walls and weatherproofing of station structures are specified in California Department of Transportation (Caltrans), Standard Specifications (2010), Section 51, Concrete Structures.

1.03 REFERENCES

A. American Society for Testing and Materials (ASTM):

1. ASTM C272 Test Method for Water Absorption of Core Materials for Structural Sandwich Constructions

2. ASTM C578 Specification for Rigid, Cellular Polystyrene Thermal Insulation

3. ASTM D994 Specification for Preformed Expansion Joint Filler for Concrete (Bituminous Type)

4. ASTM D1190 Specification for Concrete Joint Sealer, Hot-Applied Elastic Type

5. ASTM D1621 Test Method for Compressive Properties of Rigid Cellular Plastics

6. ASTM D1622 Test Method for Apparent Density of Rigid Cellular Plastics

7. ASTM D1751 Specification for Preformed Expansion Joint Filler for Concrete Paving and Structural Construction (Nonextruding and Resilient Bituminous Types)

8. ASTM D2628 Specification for Preformed Polychloroprene Elastomeric Joint Seals for Concrete Pavements

9. ASTM D3405 Specification for Joint Sealants, Hot-Applied, for Concrete and Asphalt Pavements

10. ASTM D3406 Specification for Joint Sealant, Hot-Applied, Elastomeric-Type, for Portland Cement Concrete Pavements

11. ASTM D3542 Specification for Preformed Polychloroprene Elastomeric Joint Seals for Bridges

12. ASTM E84 Test Method for Surface Burning Characteristics of Building Materials

B. State of California, Department of Transportation (Caltrans), Standard Specifications (2010)
1. Section 51-2.02 Sealed Joints

1.04 SUBMITTALS

A. General: Refer to California Department of Transportation (Caltrans), Standard Specifications (2010), Section 5, Control of Work for submittal requirements and procedures.

B. Shop Drawings: Submit drawings showing locations of all joints to be filled and sealed.

C. Product Data: Submit manufacturers' product data of joint fillers, sealing compounds, elastomeric joint seals, and plastic materials, verifying compliance with specified requirements.

D. Samples: Submit 36-inch long sample of joint filler and elastomeric joint seals and one pint can of sealing compound.

E. Certificates of Compliance: Submit certificates of compliance for sealed joints at bridge per Caltrans Standard Specifications, Section 51-2.02 Sealed Joints

PART 2 - PRODUCTS

2.01 MATERIALS

A. Joint Filler: Premolded, of sizes and thickness indicated, conforming to ASTM D994 or ASTM D1751, as applicable.

1. For structural joints and joints subject to movement, provide elastomeric joint seals conforming to ASTM D2628 or ASTM D3542, as applicable.

B. Joint Sealing Compound: Concrete joint sealant, conforming to ASTM D1190, ASTM D3405, or ASTM D3406, as applicable, for sealing of expansion (isolation) and contraction (control) joints in slabs and at junctions of slabs and vertical surfaces.

Color of joint sealant shall be as selected by the Engineer from manufacturer's standards.

1. For asphalt pavements, provide ASTM D3405 sealant only. For concrete pavements and roadways, provide ASTM D3406 sealant only.

C. Elastomeric Joint Seals: Preformed solid or multi-web design, virgin crystalization-resistant polychloroprene (neoprene) conforming with ASTM D2628 or ASTM D3542, as applicable. Seals shall be designed to function in a compressed installation mode.

1. Lubricant Adhesive: ASTM D2628 or ASTM D3542, as applicable.

D. Plastic Pads, Spacers, and Fillers: Extruded closed-cell polystyrene rigid board meeting requirements of ASTM C578, Type V, with the following physical properties:

1. Minimum weight and density when tested in accordance with ASTM D1622: 3.0 pounds per cubic foot.

2. Minimum compressive strength when tested in accordance with ASTM D1621: 100 pounds per square inch.

3. Maximum water absorption when tested in accordance with ASTM C272: 0.10 percent by volume.

4. Maximum allowable flame spread when tested in accordance with ASTM E84: 10 flame-spread index (UBC Class I).

PART 3 - EXECUTION

3.01 EXAMINATION

A. Verify that joint surfaces are dry to the extent necessary for successful sealant application and long service life as recommended by the sealant manufacturer.

B. Verify also that ambient and concrete-surface temperatures and humidity are within the ranges recommended by the manufacturer for successful sealant application.

3.02 PREPARATION

A. Thoroughly clean joints free of dirt, debris, dust, and laitance.

B. Prime joint surfaces, where required, as recommended by the manufacturer of the joint sealing compound or elastomeric joint seal, as applicable.

C. Mix multi-component sealing compound as recommended by the manufacturer.

3.03 INSTALLATION

A. Installation/Application Requirements: Joint fillers and sealing compounds shall be installed in accordance with the respective manufacturers' installation and application instructions. Comply also with ASTM D1190, ASTM D3405, Appendix XI., and ASTM D3406, Appendix XI., for application of sealants, as applicable. Coordinate the placement of joint fillers and securing them in position with the work of Section 03 11 00, Concrete Formwork.

B. Expansion (Isolation) Joints:

1. Provide premolded joint filler to full depth of slabs, less 1/2 inch. Install joint filler with top edge 1/2 inch below the surface, and tool adjacent concrete edges to a 1/4-inch radius. Use steel pins to hold material in place during placing and floating of concrete. Finished joints shall be tight and leakproof.

2. After a minimum of 28 days after slabs have been placed and finished, fill expansion joints with joint sealing compound to 1/8 inch below surface of slabs. No traffic shall be permitted to travel over sealed joints until sealing compound has properly cured.

C. Contraction (Control) Joints: Saw-cut contraction joints and weakened plane joints shall be filled with joint sealing compound in areas and locations indicated. Joints shall be filled and tooled flush to within 1/16 inch of the slab surface.

END OF SECTION

SECTION 03 20 00

CONCRETE REINFORCING

PART 1 - GENERAL

1.01 SECTION INCLUDES

A. Steel reinforcing bars.

B. Galvanized reinforcing bars.

C. Epoxy-coated reinforcing bars.

D. Wire and spiral reinforcement.

E. Welded steel wire fabric.

F. Steel bar mats.

G. Tie wire.

1.02 RELATED SECTIONS

A. Reinforcement for masonry is specified in Section 04 22 00, Concrete Unit Masonry.

B. Reinforcing steel for piles, drilled shaft foundations, portland cement concrete paving, concrete curbs, gutters, and walks, and utility structures is specified in their respective Sections.

1.03 REFERENCES

A. American Concrete Institute (ACI):

1. ACI 301 Specifications for Structural Concrete for Buildings
2. ACI 315 Details and Detailing of Concrete Reinforcement
3. ACI 318 Building Code Requirements for Structural Concrete

B. American Society for Testing and Materials (ASTM):

1. ASTM A82 Specification for Steel Wire, Plain, for Concrete Reinforcement
2. ASTM A184/ A184M Specification for Fabricated Deformed Steel Bar Mats for Concrete Reinforcement
3. ASTM A185 Specification for Steel Welded Wire Fabric, Plain, for Concrete Reinforcement
4. ASTM A370 Test Methods and Definitions for Mechanical Testing of Steel Products
5. ASTM A496 Specification for Steel Wire, Deformed, for Concrete Reinforcement
6. ASTM A497 Specification for Steel Welded Wire Fabric, Deformed, for Concrete Reinforcement

7. ASTM A615 Specification for Deformed and Plain Billet-Steel Bars for Concrete Reinforcement

8. ASTM A706 Specification for Low-Alloy Steel Deformed Bars for Concrete Reinforcement

9. ASTM A767/ A767M Specification for Zinc-Coated (Galvanized) Steel Bars for Concrete Reinforcement

10. ASTM A775/ A775M Specification for Epoxy-Coated Reinforcing Steel Bars

11. ASTM A884/ A884M Specification for Epoxy-Coated Steel Wire and Welded Wire Fabric for Reinforcement

12. ASTM D3963/ D3963M Specification for Epoxy-Coated Reinforcing Steel

13. ASTM E8 Test Methods of Tension Testing of Metallic Materials

14. ASTM E165 Test Method for Liquid Penetrant Examination

C. American Welding Society (AWS):

1. AWS D1.4 Structural Welding Code - Reinforcing Steel

D. Concrete Reinforcing Steel Institute (CRSI):

1. CRSI Manual of Standard Practice

2. CRSI Publication, Placing Reinforcing Bars

E. State of California, Department of Transportation (Caltrans), Standard Specifications (2010):

1. Section 52 Reinforcement

1.04 SUBMITTALS

A. General: Refer to California Department of Transportation (Caltrans), Standard Specifications (2010), Section 5, Control of Work for submittal requirements and procedures.

B. Shop Drawings:

1. Submit bar lists, bending diagrams and schedules, and placement plans and details for all reinforcing steel. Bar lists shall include weights.

2. Indicate descriptions, details, dimensions, arrangements and assemblies, and locations of reinforcing steel. Include number of pieces, sizes, and markings of reinforcing steel, laps and splices, supporting devices and accessories, and any other information required for fabrication and placement. Indicate any adjustments required as specified in Article 1.06.B.

3. Check Contract Drawings for anchor bolt schedules and locations, anchors, hangers, inserts, conduits, sleeves, blockouts, and any other items to be cast in concrete for

possible interference with reinforcing steel. Indicate required clearances on Shop Drawings.

4. Detail reinforcing steel in accordance with requirements of the ACI 315. Indicate individual weight of each bar, total weight of each bar size, and total weight of all bars on the list. Base calculated weights upon nominal weights specified in ACI 318, Appendix on Steel Reinforcement Information.

C. Product Data:

1. Submit manufacturers' product data and installation instructions for proprietary manufactured materials and reinforcement accessories.

2. Submit manufacturers' product data and installation instructions for proprietary exothermic metal splicing systems and proprietary mechanical coupler splicing systems when such splicing methods are permitted.

D. Samples:

1. When galvanized or epoxy-coated reinforcing bars are indicated, furnish two 12-inch long samples and two additional samples bent to minimum radius of the rebar from each size and lot shipped to the jobsite.

2. Samples shall be representative of the materials furnished. These samples, as well as any additional random samples taken by the Engineer, may be tested for specification compliance.

3. Failure of any sample to meet specification requirements shall be cause for rejection of that lot.

E. Certificates:

1. For each lot or load of reinforcing steel delivered to the jobsite, furnish mill affidavits or test reports of compliance or similar certification, certifying the grades and physical and chemical properties of the reinforcing steel and conformance with applicable ASTM Specifications, including ASTM A370, Method A9.

2. For galvanized and epoxy-coated reinforcing bars, furnish certificates of compliance with ASTM A767/A767M for galvanized bars and with ASTM A775/A775M and D3963/D3963M for epoxy-coated bars.

3. For welders, furnish welding certificates or affidavits attesting to the welders' qualifications to perform the indicated welding in accordance with applicable requirements of AWS D1.4.

4. For exothermic sleeve coupler splicing, furnish certificates or affidavits attesting to the crew's special qualifications to perform the splicing.

1.05 QUALITY ASSURANCE

A. Tolerances:

1. Fabrication: Fabricate bars to meet the following tolerances:

a. Sheared length: plus or minus 1 inch.

b. Depth of truss bars: plus 0, minus 1/2 inch.

c. Overall dimensions of stirrups, ties and spirals: plus or minus 1/2 inch.

d. All other bends: plus or minus 1 inch.

e. Fabrication tolerances not indicated on the Contract Drawings or specified above shall comply with the applicable requirements of ACI 301 and CRSI Manual of Standard Practice, Chapter 7.

2. Placement: Place bars to the following tolerances:

a. Clear distance to formed surfaces: plus or minus 1/4 inch.

b. Minimum spacing between bars: minus 1/4 inch.

c. Top bars in slabs and beams:

1) Member 8 inches deep or less: plus or minus 1/4 inch.

2) Member greater than 8 inches, but less than 2 feet deep: plus or minus 1/2 inch.

3) Members 2 feet or more deep: plus or minus 1 inch.

d. Crosswise of members: spaced evenly within 2 inches.

e. Lengthwise of members: plus or minus 2 inches.

f. Placement tolerances not indicated on the Contract Drawings or specified above shall comply with the requirements of ACI 301, ACI 318, or CRSI Manual of Standard Practice, as applicable.

B. Adjustments: Bars may be moved as necessary to avoid interference with other reinforcing steel, conduits, or embedded items. If bars are moved more than one bar diameter, or in excess of the above tolerances, the resulting arrangement of bars shall require the Engineer's approval. Minimum spacings shall not be decreased, and the required number of bars shall be placed. Bars moved to permit access for cleanup operations shall be properly replaced and secured before the start of concrete placement.

1.06 DELIVERY, STORAGE, AND HANDLING

A. Deliver reinforcing bars to the fabricator in bundles, limited to one size and length of bar, securely tied and identified with plastic tags in an exposed position indicating the mill, the melt or heat number, and the grade and size of bars.

B. Deliver steel reinforcement to the jobsite, store, and cover in a manner which will ensure that no damage shall occur to it from moisture, dirt, grease, oil, or other cause which might impair bond with concrete.

C. Deliver steel reinforcement to the jobsite properly tagged and identified, as specified herein in Article 2.03, in accordance with approved Shop Drawings.

D. Handle and store galvanized and epoxy-coated reinforcement in a manner which will prevent damage to the coatings. For epoxy-coated reinforcement, comply with the requirements of ASTM D3963/D3963M.

E. Maintain identification of steel reinforcement after bundles are broken.

F. Provide special facilities for the storage and handling of exothermic materials as recommended by the splicing system manufacturer.

PART 2 - PRODUCTS

2.01 MATERIALS

A. Steel Reinforcing Bars:

1. Billet-Steel Bars: ASTM A615, Grade 60, except that the maximum yield strength shall be 78,000 psi, and the tensile strength shall be not less than 1.25 times the actual yield strength. ASTM A615 bars may be welded only if the more stringent requirements of ANSI/AWS D1.4 are followed.

2. Low-Alloy Steel Bars: ASTM A706. Provide ASTM A706 bars for bars to be welded.

3. Weights of Bars: Refer to ACI 318, Appendix on Steel Reinforcement Information.

B. Galvanized Reinforcing Bars: ASTM A706 or ASTM A615, as applicable, galvanized in accordance with ASTM A767/A767M, Class I coating. Bars shall be cut and bent cold before galvanizing.

C. Epoxy-coated Reinforcing Bars: ASTM A706 or ASTM A615 , as applicable, epoxy-coated in accordance with ASTM A775/A775M and ASTM D3963/D3963M. Coating material shall conform to ASTM A775/A775M and ASTM D3963/D3963M, Annex A1, green in color. Furnish acceptance test reports for each lot of epoxy-coated bars delivered to the site. Bars shall be cut and bent cold before applying coating material.

D. Wire and Spiral Reinforcement: ASTM A82 for plain wire and ASTM A496 for deformed wire.

E. Welded Steel Wire Fabric - Plain Wire: ASTM A185, wire sizes and center-to-center spacings as indicated.

F. Welded Steel Wire Fabric - Deformed Wire: ASTM A497, wire sizes and center-to-center spacings as indicated.

G. Welded Steel Wire Fabric - Epoxy-Coated: ASTM A884/A884M, wire sizes and center-to-center spacings as indicated.

H. Steel Bar Mats - Deformed Bars: ASTM A184/A184M, using ASTM A706 deformed bars, sizes and spacings of members as indicated, welded or clipped at intersections.

I. Accessories: Provide reinforcement accessories, consisting of bar supports, spacers, hangers, chairs, ties, and similar items as required for spacing, assembling, and supporting reinforcement in place. Conform with CRSI referenced standards and the following requirements:

1. For footings, grade beams, and slabs on grade, provide supports with precast concrete or mortar bases or plates or horizontal runners where wetted base materials will not support chair legs.

2. For exposed-to-view concrete surfaces, where legs of supports are in contact with forms or are in close proximity to finish surfaces, provide supports with legs which are galvanized, plastic-protected, or stainless steel.

3. For galvanized reinforcement, provide all galvanized accessories.

4. For epoxy-coated reinforcement, provide accessories which are nylon-, epoxy, or plastic-coated.

J. Tie Wire: No. 16 gage or heavier, black or galvanized, soft or commercial grade steel tie wire. For galvanized reinforcement, provide zinc-coated wire. For epoxy-coated reinforcement, provide nylon-, epoxy-, or plastic-coated wire. Where tie wire is in close proximity to finish surfaces of exposed-to-view concrete, provide soft stainless steel wire.

K. Welding Electrodes: E90XX low hydrogen electrodes (for shielded metal arc welding.)

L. Exothermic Metal-Filled Sleeve Coupler:

1. System Description: Provide bar splicing connection, produced by a standard exothermic process whereby molten filler metal, contained by a high-strength steel sleeve of larger inside diameter than adjoining bars, is introduced into the annular space between the bars and the sleeve as well as between the ends of the bars. Splicing system shall produce complete fusion with 100 percent penetration of the joint.

2. Spliced Strength in Tension: 125 percent of the yield strength of connected reinforcing bars.

M. Mechanical Splice Coupler:

1. System Description: Provide bar-splicing connections, produced by threaded reinforcing bar ends and threaded coupler, or by sleeves hydraulically pressed or forged onto butt-ended reinforcing bars, or by other proprietary mechanical splicing method as proposed by the Contractor and approved by the Engineer. Mechanical splice couplers shall be capable of being installed in the clear space indicated and to provide the required clearances.

2. Spliced Strength in Tension: Minimum125 percent of the yield strength of connected reinforcing bars, unless otherwise indicated.

2.02 FABRICATION

A. Fabrication Standards: Fabrication of steel reinforcement shall be in accordance with the Contract Drawings and approved Shop Drawings. Where specific details are not indicated, comply with applicable requirements of ACI 301, ACI 318, and CRSI Manual of Standard Practice.

B. Cutting and Bending: Cutting and bending shall be performed at a central location, equipped and suitable for the purpose. Bars shall be accurately cut and bent as indicated. Bars shall be bent cold. Heating of bars for bending or straightening will not be permitted. Bars shall not be bent or straightened in any manner which will injure the material. Label all bars in accordance with bending diagrams and schedules, and secure like pieces in bundles when appropriate.

C. Welding:

1. Welding of reinforcement, where indicated and approved, including preparation of bars, shall conform with applicable requirements of AWS D1.4. Welders shall be prequalified in accordance with AWS D1.4, Chapter 6.

2. Use full penetration butt welds by the electric-arc method unless otherwise indicated or approved. Weld splices shall develop 125 percent of the specified yield strength of the bars, or of the smaller bar in transition splices.

3. Clean bars of oil, grease, dirt, and other foreign matter and flame-dry before welding. Preheat bars before welding in accordance with AWS D1.4, Chapter 5. Stagger splices in adjacent bars a minimum of 48 inches.

D. Repair of Damaged Coatings: Bars for galvanized reinforcement shall be cut and bent cold before galvanizing. Galvanized and epoxy coatings damaged by shipping, handling, or cutting and bending shall be repaired as specified in ACI 301, and ASTM A767/A767M, ASTM A775/A775M, ASTM A884/A884M, and ASTM D3963/D3963M, as applicable.

2.03 IDENTIFICATION

A. Reinforcing steel shall be bundled and tagged with grades and sizes, heat numbers, and suitable identification marks for checking, sorting, and placing. Sizes and mark numbers shall correspond to placing Shop Drawings and schedules. Tags and markings shall be water-resistant and shall not be removed until steel reinforcement is placed in position.

2.04 REINFORCING STEEL FOR DUCT BANKS

A. Reinforcing steel shall be provided for duct banks. Longitudinal steel shall be provided with a minimum total cross sectional area of 0.0018 times the gross area of the duct bank. The maximum spacing of reinforcing bars shall be 18 inches, with a minimum of one bar provided in each corner. Tie bars in the transverse direction enclosing the longitudinal steel bars shall also be provided, with a minimum size of No. 3 bars at a minimum spacing of 12 inches. The minimum clear concrete cover over reinforcing steel shall be 3 inches where concrete is cast directly against earth, and 1-1/2 inches where concrete is cast directly against fabricated formwork.

B. Where duct banks enter rigid underground structures, reinforcing steel shall be provided to tie the duct bank to the structure. Details shall be provided showing methods used to prevent damage to duct banks due to differential settlement at these points.

PART 3 - EXECUTION

3.01 VERIFICATION OF CONDITIONS

A. Verify that surfaces, over or against which concrete is to be placed, are clean and in proper condition for placing reinforcement.

B. Verify that items to be embedded in concrete inserts, sleeves, and block-outs are secured in place as required.

3.02 PLACING

A. Placing Standards: Reinforcing steel shall be placed in accordance with the Contract Drawings, approved Shop Drawings, and the applicable requirements of ACI 301, ACI 318, CRSI Manual of Standard Practice, and CRSI Placing Reinforcing Bars. Install reinforcement accurately and secure against movement, particularly under the weight of workers and the placement of concrete.

B. Reinforcing Supports: Bars shall be supported on metal or plastic chairs, spacers, and hangers, accurately placed and securely fastened to steel reinforcement in place. Support legs

of accessories in forms without embedding in the form surface. Hoops and stirrups shall be accurately spaced and wired to the reinforcement.

C. Placing and Tying: Reinforcing steel shall be installed in place, spaced, and rigidly and securely tied or wired with tie wire at all splices and at crossing points and intersections in the positions indicated. It is not necessary to tie bars at every intersection. Comply with requirements of CRSI Placing Reinforcing Bars, Chapter 10. Snap ties are acceptable for intermediate intersections. Rebending of bars on the job to fit different conditions will not be permitted. Point ends of wire ties away from adjacent form surfaces.

D. Spacing: Center-to-center distance between parallel bars shall be in accordance with the Contract Drawings or, where not indicated, the minimum clear spacing shall be in accordance with ACI 318.

E. Longitudinal Location of Bends and Ends of Bar: A maximum of plus or minus 3 inches from the indicated location will be permitted, provided that specified protective concrete cover at ends of members is not reduced by more than 1/2 inch.

F. Splices:

1. Lapped Splices:

a. Laps of splices shall be securely tied together to maintain the alignment of the bars, to provide the required minimum clearances, and to transfer stress by bond. Lapped splices and development lengths not shown shall be detailed to develop Class B lapping lengths and development lengths in tension, respectively, in accordance with ACI 318.

b. Splices of alternate bars shall be staggered a minimum clear offset of 2 feet between splices. Splices shall be tied with tie wire, or splices may be lap welded in accordance with AWS D1.4. Lapped splices are not permitted for No. 14 and No. 18 bars, or when specifically excluded by Contract provisions regardless of size.

2. Exothermic Metal-Filled Coupler Splices: Conform with the product manufacturer's installation instructions and recommendations and with applicable requirements of AWS D1.4 for exothermic welding.

3. Mechanical Coupler Splices:

a. Perform installation of coupler and tightening of joint assembly in accordance with the coupler manufacturer's installation instructions and recommendations.

b. Reinforcing bars to be joined shall be shop threaded using special machinery to produce the required tapered threads. Where previously threaded bars must be cut or where threads are damaged, bars shall be replaced, or an alternate splicing system approved by the Engineer shall be substituted. Bars shall not be rethreaded, and damaged threads shall not be repaired in the field.

c. Prior to joining, inspect all threads and assure that they have been properly made and are clean.

d. Rotate coupler and bar initially by hand or wrench until snug (approximately 3-1/4 to 4 turns). Apply 24-inch minimum pipe wrench and turn coupler (or bar) until further turning is resisted with the application of a minimum torque of 200 foot-pounds. Suitably mark joint to indicate that tightening has been completed.

e. For proprietary mechanical splicing systems not specified herein, installation shall conform with the manufacturer's installation instructions.

4. Spiral Reinforcement Splices: Splices shall conform with applicable requirements of ACI 318.

G. Dowels: Provide dowels where indicated or required for connecting construction and for maintaining structural and reinforcement continuity. Dowels shall be tied securely in place before concrete is deposited. Provide additional bars for proper support and anchorage where required. Do not bend dowels after embedment.

H. Welded Wire Fabric:

1. Wire fabric shall be installed in lengths as long as practicable and shall be wire-tied at all laps and splices. End laps shall be offset in adjacent widths. Lap welded wire fabric in accordance with applicable requirements of ACI 318.

2. Where required welded wire fabric shall be secured in position with suitable supports, accessories, and tie wire as indicated and required to ensure against movement from workers and placement of concrete lift fabric as concrete is placed to assure proper embedment at position indicated.

3.03 PROTECTIVE CONCRETE COVER

A. Minimum concrete coverage for steel reinforcement shall be as specified in ACI 301, ACI 318, or CRSI Manual of Standard Practice. If there is a conflict between the standards specified, the thicker concrete coverage shall govern.

3.04 CLEANING:

A. Reinforcement at time of depositing concrete shall be free of corrosion and coatings that may impair bond with concrete, such as form oil, mill scale, or loose deposits of rust and other corrosion.

3.05 FIELD QUALITY CONTROL

A. In accordance with California Department of Transportation (Caltrans), Standard Specifications (2010), Section 5, Control of Work quality control inspections and tests to be performed by the Contractor include the following:

1. Placement of Reinforcing Steel: Visual inspection of reinforcing steel in place, including bar supports, tied laps and intersections, welded wire fabric, and bar mats.

2. Welds:

a. Visual inspection of reinforcing bar welds.

b. Tension tests of welded butt joints. Tests shall be performed on sample welds produced by the Contractor in accordance with ASTM E8.

c. Nondestructive tests of installed welded butt joints shall be performed in accordance with ASTM E165.

d. Inspections and tests shall be performed in accordance with the applicable requirements of AWS D1.4, Chapters 6 and 7.

3. Exothermic/Coupler Splices:

a. Continuous visual inspection for the first eight hours, minimum, of the work as performed by any crew, and again by any replacement crew. All splices require visual inspection before concrete may be placed.

b. Visual inspection shall be performed in accordance with the product manufacturer's instructions and recommendations for such inspection.

c. Inspections shall measure and record all voids. Exothermic rebar splices shall be accepted, provided measured "void limits," per end, do not exceed manufacturer's specified "void limits."

d. Splices indicating improper fill, slag at tap hole, or blowouts shall be rejected.

4. Mechanical Coupler Splices: Test 100 percent of the couplers, using a 24-inch click-type torque wrench calibrated to 200 foot-pounds. Minimum turning torque of 200 foot-pounds shall be applied to the extent that further turning is resisted. Where tests reveal failure of couplers to be properly tightened, couplers shall be removed and replaced.

B. For exothermic/coupler splices, the Contractor shall provide qualification splices for each position as follows:

1. One sister splice for the first 25 splices; thereafter, one sister splice for every 50 splices.

2. Sister splices shall be laboratory tested by the Engineer for strength in tension (125 percent of the yield strength of connecting bars).

END OF SECTION 03 20 00

SECTION 033000

CAST-IN-PLACE CONCRETE

PART 1 - GENERAL

1.01 SECTION INCLUDES

A. Conveying and placing concrete.

B. Placement under water.

C. Consolidation.

D. Construction joints.

E. Expansion and contraction joints.

F. Curing and protection.

1.02 RELATED SECTIONS

A. Portland cement concrete specified in California Department of Transportation (Caltrans), Standard Specifications (2010), Section 90, Concrete.

B. Finishing and curing of formed and unformed concrete surfaces, including repair and patching of surface defects, are specified in Section 03 35 00, Concrete Finishing.

1.03 DEFINITIONS

A. The words and terms used in these Specifications conform to the definitions given in ACI 116R.

1.04 REFERENCES

A. American Concrete Institute (ACI):

1. ACI 116R Cement and Concrete Terminology
2. ACI 117 Standard Specification for Tolerances for Concrete Construction and Materials
3. ACI 301 Standard Specifications for Structural Concrete
4. ACI 302.1R Guide for Concrete Floor and Slab Construction
5. ACI 303.1 Standard Specification for Cast-In-Place Architectural Concrete
6. ACI 304R Guide for Measuring, Mixing, Transporting, and Placing Concrete
7. ACI 304.2R Placing Concrete by Pumping Methods
8. ACI 305R Hot Weather Concreting

9. ACI 306.1 Standard Specification for Cold Weather Concreting

10. ACI 308 Standard Practice for Curing Concrete

11. ACI 309R Guide for Consolidation of Concrete

12. ACI 318 Building Code Requirements for Structural Concrete

13. ACI 503.2 Standard Specification for Bonding Plastic Concrete to Hardened Concrete with a Multi-Component Epoxy Adhesive

B. American Society for Testing and Materials (ASTM):

1. ASTM C31 Standard Practice of Making and Curing Concrete Test Specimens in the Field

2. ASTM C94 Specification for Ready-Mixed Concrete

3. ASTM C881 Specification for Epoxy-Resin-Base Bonding Systems for Concrete

C. California Department of Transportation (Caltrans), Standard Specifications (2010):

1. Section 51 Concrete Structures

1.05 SUBMITTALS

A. General: Refer to California Department of Transportation (Caltrans), Standard Specifications (2010), Section 5, Control of Work for submittal requirements and procedures.

B. Shop Drawings:

1. Submit drawings that indicate the locations of all joints in concrete, including construction joints, expansion joints, isolation joints, and contraction joints. Coordinate with the requirements specified in Section 03 11 00, Concrete Forming.

2. Submit drawings that indicate concrete placement schedule, method, sequence, location, and boundaries. Include each type and class of concrete, and quantity in cubic yards.

3. Submit shop drawings for permanent steel deck forms in accordance with Caltrans Standard Specifications, Section 51-1.01C(2) Permanent Steel Deck Forms.

C. Product Data: Submit manufacturer's product data for epoxy adhesive.

D. Records and Reports: Report the location in the finished work of each mix design, and the start and completion times of placement of each batch of concrete placed for each date concrete is placed.

1.06 QUALITY ASSURANCE

A. Tolerances:

1. Concrete Tolerances: Comply with the requirements of ACI 117 as applicable. Coordinate with the requirements specified in Section 03 11 00, Concrete Forming.

2. Tolerances for Slabs and Flatwork: Comply with the requirements specified in Section 03 35 00, Concrete Finishing.

3. Tolerances for Roadway Surfaces of Structures and Approach Slabs: Comply with the requirements specified in Caltrans Standard Specifications, Section 51-1.01D(4)(b) Surface Smoothness.

B. Coefficient of Friction for Deck Surfaces and Approach Slabs: Comply with the requirements specified in Caltrans Standard Specifications, Section 51-1.01D(4)(c) Coefficient of Friction.

C. Crack Intensity for Deck Surfaces: Comply with the requirements specified in Caltrans Standard Specifications, Section 51-1.01D(4)(d) Crack Intensity.

D. Architectural Concrete: Where concrete is indicated as architectural concrete exposed to public view, such concrete shall be produced in accordance with applicable requirements of ACI 301 and ACI 303.1.

Site Mock-Ups:

1. Refer to California Department of Transportation (Caltrans), Standard Specifications (2010), Section 5, Control of Work for mock-up requirements and procedures.

2. Construct site mock-ups for all architectural concrete work and formed concrete that will be exposed to the public in the finished work, not less than 4 feet by 6 feet in surface area, for review and acceptance by the Engineer, before starting the placement of concrete.

3. Approved site mock-ups shall set the standard for the various architectural concrete features, formed finishes, and colors of the concrete. Provide as many mock-ups as required to show all the different features and formed surfaces of the concrete.

E. Cold Joints: Cold joints in concrete will not be permitted unless planned and treated properly as construction joints.

F. Monitoring of Formwork: Provide monitoring of forms and embedded items to detect movement, or forms and embedded items out-of-alignment, from pressure of concrete placement.

1.07 ENVIRONMENTAL REQUIREMENTS

A. Delivering and placing of concrete in hot weather and cold weather shall conform with applicable requirements of ACI 305R and ACI 306.1 and California Department of Transportation (Caltrans), Standard Specifications (2010), Section 90, Concrete.

B. Do not place concrete when the rate of evaporation of surface moisture from concrete exceeds 0.2 pounds per square foot per hour as indicated in Figure 2.1.5 of ACI 305R.

C. Do not place concrete in, or adjacent to, any structure where piles are required until all piles in the structure have been driven or installed.

PART 2 - PRODUCTS

2.01 MATERIALS

A. Formwork: Refer to Section 03 11 00, Concrete Forming, for requirements.

B. Joint Fillers and Sealers: Refer to Section 03 15 00, Concrete Accessories, for requirements.

C. Reinforcing Steel: Refer to Section 03 20 00, Concrete Reinforcing, for requirements.

D. Concrete Curing Materials: Refer to Section 03 35 00, Concrete Finishing, for requirements.

E. Epoxy Adhesive: ASTM C881, Type II for non-load-bearing concrete and Type V for load-bearing concrete, Grade and Class as determined by project conditions and requirements.

F. Permanent Steel Deck Forms: Comply with the requirements specified in Caltrans Standard Specifications, Section 51-1.03C(2)(c) Permanent Steel Deck Forms.

PART 3 - EXECUTION

3.01 EXAMINATION

A. Inspect forms, earth bearing surfaces, reinforcement, and embedded items, and obtain the Engineer's written approval before placing concrete. Complete and sign a pour card on the form supplied by the Engineer. The Engineer shall countersign the card prior to commencing the pour.

3.02 PREPARATION

A. Place concrete under the observation of the Engineer and with the Contractor's Quality Control Representative present to document requirements and results of the placement.

B. Whenever possible, place concrete during normal working hours. When concrete- placement schedules require concrete placement at times other than normal working hours, ensure that the Engineer is notified and is present at the time of placement.

C. Do not place concrete until conditions and facilities for the storage, handling, and transportation of concrete test specimens are in compliance with the requirements of ASTM C31 and Section 03 05 15, Portland Cement Concrete, and are approved by the Engineer.

D. Prior to placement of concrete, the subgrade shall be in a firm, well-drained condition, and of adequate and uniform load-bearing nature to support construction personnel, construction materials, construction equipment, and steel reinforcing mats without tracking, rutting, heaving, or settlement. All weak, soft, saturated, or otherwise unsuitable material shall be removed and replaced with structural backfill or lean concrete.

E. All structure foundations, including those for Stations and for subway box, shall be inspected and approved, in writing, by a qualified, independent geotechnical engineer prior to placement of footings and base slabs, to confirm the adequacy of the supporting soil for concrete placement.

F. Earth bottoms or bearing surfaces for footings and slabs shall be dampened but not saturated or muddied just before placing concrete.

3.03 TRANSPORTING

A. Concrete shall be central-mixed concrete from a central batch plant, transported to the jobsite in a truck mixer, in accordance with the requirements specified in California Department of Transportation (Caltrans), Standard Specifications (2010), Section 90, Concrete, and ASTM C94.

B. Transport concrete to the jobsite in a manner that will assure efficient delivery of concrete to the point of placement without adversely altering specified properties with regard to water-cement ratio, slump, air entrainment, and homogeneity.

3.04 CONVEYING AND PLACING

A. Placement Standards: Conveying and placing of concrete shall conform with applicable requirements of ACI 301, ACI 302.1R, ACI 304R, and ACI 318.

B. Handling and Depositing:

1. Concrete placing equipment shall have sufficient capacity to provide a placement rate that will preclude cold joints and that shall deposit the concrete without segregation or loss of ingredients.

2. Concrete placement, once started, shall be carried on as a continuous operation until the section of approved size and shape is completed.

3. Concrete shall be handled as rapidly as practicable from the mixer to the place of final deposit by methods that prevent the separation or loss of ingredients. Concrete shall be deposited, as nearly as practicable, in its final horizontal position to avoid redistribution or flowing.

4. Concrete shall not be dropped freely where reinforcing will cause segregation, nor shall it be dropped freely more than 5 feet. Concrete shall be deposited to maintain a plastic surface approximately horizontal.

5. In placing walls, columns, or thin sections (6 inches or less in thickness) of heights greater than 10 feet, concrete placement rate, lift thickness, and time intervals between lifts shall be as indicated on approved Shop Drawings. Openings in the form, elephant trunk tremies, or other approved devices, shall be used that will permit the concrete to be placed without segregation or accumulation of hardened concrete on the forms or metal reinforcement above the level of the fresh concrete.

6. Concrete that has partially hardened shall not be deposited in the work. The discharge of concrete shall be started not later than 60 minutes after the introduction of mixing water. Placing of concrete shall be completed within 90 minutes after the first introduction of water into the mix.

C. Pumping:

1. Concrete may be placed by pumping if the maximum slump can be maintained and if accepted in writing by the Engineer for the location proposed.

2. Placing concrete by pumping methods shall conform with applicable requirements of ACI 304R and ACI 304.2R.

3. Equipment for pumping shall be of such size and design as to ensure a continuous flow of concrete at the delivery end without separation of materials. Concrete from end of hose shall have a free fall of less than 5 feet. Pump hoses shall be supported on horses or similar devices so that reinforcement or post-tensioning ducts or tendons are not moved from their original position.

4. The concrete mix shall be designed to the same requirements as specified in California Department of Transportation (Caltrans), Standard Specifications (2010), Section 90, Concrete, and may be altered for placement purposes with the prior approval of the Engineer.

3.05 PLACEMENT UNDER WATER

A. Placement Standards: Placing of concrete in or under water shall conform with requirements of ACI 304R. All concrete to be placed under water shall be placed by the tremie method or by direct pumping.

B. Placement Requirements: Deposit concrete in water only when indicated or approved in writing by the Engineer, and only under the observation of the Engineer. Use only tremie method and direct pumping with equipment that has been accepted by the Engineer.

3.06 CONSOLIDATION

A. Concrete shall be thoroughly consolidated and compacted by mechanical vibration during placement in accordance with the requirements of ACI 309R.

B. The Engineer will inspect concrete placement to confirm that proper placing methods are being employed, and that special techniques are being used in congested areas and around obstructions such as pipes and other embedded items. Check installation of embedded items for correct location and orientation during concrete placement.

C. Conduct vibration in a systematic manner by competent, skilled, and experienced workers, with regularly maintained vibrators, and with sufficient back-up units at the jobsite. Use the largest and most powerful vibrator that can be effectively operated in the given work, with a minimum frequency of 8,000 vibrations or impulses per minute, and of sufficient amplitude to effectively consolidate the concrete.

D. Insert and withdraw the vibrator vertically at uniform spacing over the entire area of the placement. Space the distance between insertions such that "spheres of influence" of each insertion overlap.

E. Conduct vibration so as to produce concrete that is of uniform texture and appearance, free of honeycombing, air and rock pockets, streaking, cold joints, and visible lift lines.

F. On vertical surfaces and on all architectural concrete where an as-cast finish is required, use additional vibration and spading as required to bring a full surface of mortar against the forms, so as to eliminate objectionable air voids, bug holes, and other surface defects. Additional procedures for vibrating concrete shall consist of the following:

1. Reduce the distance between internal vibration insertions and increase the time for each insertion.

2. Insert the vibrator as close to the face of the form as possible, without contacting the form.

3. Use spading as a supplement to vibration at forms to provide fully filled out form surfaces without air holes and rock pockets.

4. Provide vibration of forms only if approved by the Engineer for the location.

3.07 CONSTRUCTION JOINTS

A. Construction joints will be permitted only where indicated or approved by the Engineer.

B. Provide and prepare construction joints and install waterstops in accordance with the applicable requirements of ACI 301 and ACI 304R, and as specified in Section 03 11 00, Concrete Forming.

C. Make construction joints straight and as inconspicuous as possible, and in exact vertical and horizontal alignment with the structure, as the case may be.

D. Use approved key, at least 1-1/2 inches in depth, at joints unless otherwise indicated or approved by the Engineer.

E. Thoroughly clean the surface of the concrete at construction joints and remove laitance, loose or defective concrete, coatings, sand, sealing compound and other foreign material. Prepare surfaces of joints by sandblasting or other approved methods to remove laitance and expose aggregate uniformly.

F. Immediately before new concrete is placed, wet the joint surfaces and remove standing water. To allow for shrinkage, do not place new concrete against the hardened concrete side of a construction joint for a minimum of 72 hours.

G. Locate joints that are not indicated so that the strength of the structure is not impaired. Joint types and their locations are subject to prior approval of the Engineer.

H. Ensure that reinforcement is continuous across construction joints.

I. Place waterstops in construction joints where indicated.

J. Where bonding of the joint is required, provide epoxy adhesive hereinbefore specified and apply in accordance with ACI 503.2.

K. Retighten forms and dampen concrete surfaces before concrete placing is continued.

L. Allow at least 72 hours to elapse before continuing concrete placement at a construction joint. Approval for accelerating the minimum time elapsing between adjacent placements will be based on tests and methods that confirm that a minimum moisture loss at a relatively constant temperature will be maintained for the period as necessary to control the heat of hydration and hardening of concrete, and to prevent shrinkage and thermal cracking.

3.08 EXPANSION AND CONTRACTION JOINTS

A. Refer to Section 03 11 00, Concrete Forming, for slab screeds and for formwork where expansion and contraction joints are indicated as architectural features, such as reveals or rustications.

B. Refer to Section 03 15 00, Concrete Accessories, for expansion joint filler material and joint sealing compound.

C. Refer to Section 03 35 00, Concrete Finishing, for finishing of edges of expansion joints in slabs with curved edging tool.

3.09 CURING AND PROTECTION

A. Curing of concrete shall conform with applicable requirements of ACI 301 and ACI 308, except that the curing duration shall be a minimum period of ten days. HVFAC shall be cured a minimum of 28 days including an initial 10 days of moist curing. Curing with earth, sand, sawdust, straw, and hay will not be permitted.

B. Keep concrete in a moist condition from the time it is placed until it has cured for at least ten days. Keep forms damp and cool until removal of forms.

C. Immediately upon removal of forms, exposed concrete surfaces shall be kept moist by applying an approved curing compound or by covering with damp curing materials as specified in Section 03 35 00, Concrete Finishing.

D. Concrete shall not be permitted to dry during the curing period because of finishing operations.

E. Protect fresh concrete from hot sun, drying winds, rain, damage, or soiling. Fog spray freshly placed slabs after bleed water dissipates and after finishing operations commence. Allow no slabs to become dry at any time until finishing operations are complete.

F. Finishing and curing of slabs are specified in Section 03 35 00, Concrete Finishing.

G. Protect concrete from injurious action of the elements and defacement of any kind. Protect exposed concrete corners from traffic or use that will damage them in any way.

H. Protect concrete during the curing period from mechanical and physical stresses that may be caused by heavy equipment movement, subjecting the concrete to load stress, load shock, or excessive vibration.

3.10 REPAIR OF SURFACE DEFECTS

A. Refer to Section 03 35 00, Concrete Finishing, for requirements.

END OF SECTION 03 30 00

SECTION 03 35 00

CONCRETE FINISHING

PART 1 – GENERAL

1.01 DESCRIPTION

A. This Section includes specifications for the finishing and curing of exposed and unexposed, formed and unformed concrete surfaces, including the repair of surface defects.

1.02 REFERENCE STANDARDS

A. American Association of State Highway and Transportation Officials (AASHTO):

1. M182 Burlap Cloth Made from Jute or Kenaf

B. American Concrete Institute (ACI):

1. 117 Specification for Tolerances for Concrete Construction and Materials
2. 301 Specifications for Structural Concrete
3. 308 Standard Practice for Curing Concrete
4. 503.4 Specification for Repairing Concrete with Epoxy Mortars

C. ASTM International (ASTM):

1. C33 Specification for Concrete Aggregates
2. C150 Specification for Portland Cement
3. C171 Specifications for Sheet Materials for Curing Concrete
4. C309 Specification for Liquid Membrane-Forming Compounds for Curing Concrete
5. C881 Specification for Epoxy-Resin-Base Bonding Systems for Concrete

D. California Department of Transportation (Caltrans), Standard Specifications (2010):

1. Section 51 Concrete Structures

1.03 SYSTEM DESCRIPTION

A. Finishing of formed concrete surfaces shall conform to applicable requirements of ACI 301.

B. Finishes for slabs and flatwork shall conform to applicable requirements of ACI 301.

C. Special architectural finishes for formed concrete surfaces shall conform to applicable requirements of ACI 301.

1.04 SUBMITTALS

A. Product Data: Submit manufacturers' product data for manufactured products.

B. Samples: Review by the Engineer will be for color and texture only. Approved samples will become the Engineers control samples.

1. Submit samples of not less than 12 inches by 12 inches in size of each type of architectural finish and color as described in the finish and color schedule in the Contract Drawings, indicating materials and methods used to produce the finishes.

1.05 QUALITY ASSURANCE

A. Requirements of Regulatory Agencies: Comply with air pollution regulations of governing authorities for sandblasting activities and operations.

B. Site Mock-Ups:

1. Exposed Finishes: Construct site mock-ups for all exposed finishes including all architectural concrete work and all other formed concrete that will be exposed to the public in the finished work, of not less than 4 feet by 6 feet in surface area, for review and acceptance by the Engineer, before starting the placement of concrete.

2. Approved site mock-ups shall set the standard for the various colors and finishes of all architectural concrete features and formed concrete work.

3. Provide as many mock-ups as required to show all the different combinations of colors and finishes that are specified to obtain the Engineer s approval.

4. Maintain approved mock-ups and use as the standard for the aesthetic quality of the surface finish for work represented by mock-ups. Remove mock-ups when permitted by the Engineer.

PART 2 - PRODUCTS

2.01 REPAIR AND FINISHING MATERIALS

A. Portland Cement: ASTM C150, Type I or II, of same brand as used in the work. Furnish white Portland cement where required to produce color matching color of surrounding concrete.

B. Aggregate:

1. For Bonding Grout: ASTM C33, washed clean sand passing a No. 30 sieve.

2. For Patching Mortar: ASTM C33 washed clean, graded fine aggregate of suitable size for areas to be repaired. Clean coarse aggregate up to Size No. 8 may be added for repair of larger pockets and voids.

3. For Washed Aggregate Finish: Washed clean, match approved sample.

C. Commercial Patching Mortar: A structural repair mortar may be furnished if appropriate for the use and approved by the Engineer.

D. Epoxy Patching Mortar: As specified in ACI 503.4 for Epoxy Mortar.

E. Epoxy Adhesive: ASTM C881, Type II or Type V, epoxy-based bonding agent.

F. Color Hardener: As specified in the Contract Documents.

2.02 REPAIR MIXES

A. Bonding Grout: 1 part Portland cement to 1 part No. 30 mesh sand, mixed to the consistency of a thick cream,

B. Patching Mortar: Make the patching mortar of the same materials and of approximately the same proportions as used for the concrete, except omit the coarse aggregate. Use not more than 1 part Portland cement to 2-1/2 parts sand by damp loose volume, and substitute white Portland cement for a portion of the regular gray Portland cement to produce patching mix matching the surrounding concrete in color when dry. Determine the proportion of white Portland cement by trial mixes and test areas, prior to repair of actual defective areas.

2.03 CONCRETE COLOR

A. Integral Color Concrete Pigment

1. For concrete that includes integral color, provide ready-to-use, integral color material. Colors shall be as indicated on the Color and Finish Schedule in the Contract Drawings.

2.04 CURING MATERIALS

A. Damp Curing Materials: Non-staining.

1. Waterproof Sheet Materials: ASTM C171, waterproof paper with white paper face, polyethylene film pigmented white or white burlap- polyethylene sheeting.

2. Burlap: AASHTO M182, of class or weight suitable for the use and location. Do not use burlap where concrete is exposed to direct sunlight.

B. Curing Compound: ASTM C309, liquid membrane-forming curing compound, Type I, Class A or B, as appropriate for the use or location.

1. Where concrete surfaces will receive architectural finishes, such as resilient floor coverings, paint, or membrane waterproofing, membrane- forming curing compound shall not leave a coating or residue which will impair bond of adhesives, paints, and coatings with concrete.

C. Curing Compound for Colored Concrete: Curing compound shall be approved by the color additive manufacturer for use with colored concrete. Provide W-1000 Clear Cure & Seal, manufactured by Davis Colors, or approved equal.

PART 3 - INSTALLATION

3.01 FINISH OF FORMED SURFACES

A. Unexposed Surfaces:

1. Concrete which will not be exposed shall be exposed in the completed structure shall be any form finish as specified in Section 03 11 00, Concrete Forming, and ACI 301 for rough form finish.

2. Concrete to receive membrane waterproofing shall receive a “smooth form finish” in accordance with ACI 301.

B. Exposed Surfaces: Concrete which will be exposed shall receive the finishes and colors as described in the Contract Drawings.

1. Construction Joints: Use technique acceptable to the Engineer to achieve uniform treatment of construction joints.

2. Protection and Repair:

a. Protect adjacent materials and finishes from dust, dirt, and other surface or physical damage during abrasive blast finishing operations. Provide protection as required and remove from site at completion of the work.

b. Repair or replace other work damaged by finishing operations.

3. Clean-up: Maintain control of concrete chips, dust, and debris in each area of the work. Clean up and remove such material at the completion of each day of operation. Prevent migration of airborne materials by the use of tarpaulins, wind breaks, and similar containing devices.

3.02 REPAIR OF SURFACE DEFECTS

A. Repair Standards: Repair of surface defects shall conform to applicable requirements of ACI 301. When using epoxy mortar, conform to applicable requirements of ACI 503.4.

B. Surface Defects:

1. Begin repair of surface defects immediately after form removal. For repair with epoxy mortar, concrete shall be dry.

2. Surface defects are defined to include: form-tie holes, air voids and pockets, bug holes with a nominal diameter or depth greater than 1/4- inch, honeycombed areas, rock pockets, visible construction joints, fins and burrs.

3. Repair of surface defects shall be tightly bonded and shall result in concrete surfaces of uniform color and texture, matching adjacent surfaces, and free of shrinkage cracks.

C. Repair Work:

1. Remove honeycombed and other defective concrete down to sound concrete. Saw-cut the edges perpendicular to the surface or slightly undercut. Feather-edges will not be permitted. Dampen the area to be patched and an area at least 6 inches wide surrounding it to prevent absorption of water from the patching mortar.

2. Where rock pockets or similar defects or voids expose steel reinforcement, cutout to solid surface behind the reinforcing steel to provide suitable key-lock for patching mortar. Envelop exposed reinforcing bar with patching mortar.

3. Bond patching mortar to concrete with bonding grout or epoxy adhesive. Brush bonding grout well onto the concrete. Bond commercial patching mortar to concrete in accordance with the manufacturer s instructions.

4. After surface water has evaporated from the area to be patched, brush the bond coat well into the surface. When the bond coat begins to lose the water sheen, apply the patching mortar. Compact the mortar into place and strike off so as to leave the patch slightly higher than the surrounding surface. To permit initial shrinkage, leave the patch undisturbed for at least 1 hour before being finally finished. Keep the patched area damp for 7 days.

5. Neatly finish patched surfaces to match adjacent surrounding surface texture of concrete. Grind or fill surfaces to produce level and plumb, true planes.

6. For walls exposed in the finish work, form tie holes shall be patched and finished flush with adjacent surface. For holes passing entirely through walls, use a plunger type injection gun or other suitable device to completely fill the holes.

7. In order to patch honeycombed areas or rock pockets which are too large and unsatisfactory for mortar patching, cut out to solid surface, key, and pack sold with matching concrete to produce firm bond and flush surface. Patching shall match texture of adjacent surfaces where exposed in the finished work.

8. Remove repair work in exposed locations which does not match the texture and color of surrounding adjacent surfaces or which was not well performed and perform again until the repair work conforms to specified requirements.

9. Remove fines and loose materials from surfaces to receive membrane waterproofing, and patch voids and cracks flush with adjacent surfaces.

10. Cure completed repairs as specified in Article 3.05, Curing, herein.

3.03 SLABS AND FLATWORK

A. Placement and Finishing Standards: Place, consolidate, and finish slabs and flatwork in accordance with applicable requirements of ACI 301. Coordinate with Section 03 30 00, Cast-In-Place Concrete, as applicable.

B. Placement :

1. Place slabs and flatwork and finish monolithically. Strike off and screed slabs to true, plane surfaces at required elevations, and thoroughly compact concrete with vibrators, floats, and tampers to force coarse aggregate below the surface. Finish slab within four hours of concrete placement.

2. Whether indicated or not, in areas where drains occur, slope finished slab to drains. Slope shall be a minimum of 1/8-inch per foot unless otherwise indicated.

C. Slab finishes: Unless indicated otherwise, slabs and flatwork shall receive the following finishes as indicated:

1. Scratched finish: Conform to ACI 301. Provide “scratched finish” for slab substrates to receive cementitious toppings or finishes, such as terrazzo or mortar setting bed for ceramic tile.

2. Floated finish: Conform to ACI 301. Provide “floated finish” for track slabs and mud slabs and for slabs and flatwork to receive roofing and membrane waterproofing.

3. Troweled finish: Conform to ACI 301. Provide “troweled finish” for interior slabs and flatwork to be exposed in the completed structure, for slabs to receive resilient floor coverings, and for flatwork to receive elastomeric bearing pads.

4. Broom finish: Conform to ACI 301. Exact texture and coarseness of the broom finish shall match the approved site mock-up. Provide fine or medium-coarse “broom finish” as indicated for exterior sidewalks and paving, garage floors (other than parking garages), exterior ramps, equipment and transformer pads, and subway invert slab.

5. Unspecified finish: When finish is not indicated or specified, provide finishes as specified in ACI 301.

6. Washed aggregate finish: Evenly distribute seeded aggregate over a floated finish. Tamp surface to bring fines to surface completely covering seeded aggregate. Apply troweled finish. Apply surface retarder according to manufacturer’s instructions and recommendations. Wash surfaces with water and finish with stiff bristle brush until seeded aggregate is uniformly exposed.

7. Swirl Pattern Finish: After basic floating operations have been completed, hand float slabs using wood float to produce a continuous swirl patterned surface, free from porous spots, irregularities, depressions, and small pockets or rough spots such as may be caused by accidentally disturbing particles of coarse aggregate embedded near the surface. Use natural arm circular motion to produce rows of approximately 1-foot radius swirl pattern covering approximately half of the preceding row with each successive row. Provide swirl pattern finish for parking garage floors.

D. Surface Tolerances and Finishes: Refer to Article 3.04, Tolerances, herein.

1. Flat Tolerance: Slabs and flatwork with “troweled finish” and with “nonslip finish.”

2. Straightedge Tolerance: Slabs and flatwork with fine “broom finish” or medium-coarse “broom finish.”

3. Bullfloated Tolerance: Slabs and flatwork with “scratched finish,” with “floated finish,” and with coarse “broom finish.”

E. Joints:

1. Construction, expansion, isolation, and contraction joints shall be located as indicated. Construction joints shall act as contraction joints. Where additional contraction joints are required to prevent shrinkage cracks, saw-cut such joints. All joints shall be straight and true to line.

2. Mark-off lines or edges at formed construction and expansion joints shall be finished with 1/4-inch radius curved edging tool, neat and true to line, uniform throughout.

3.04 TOLERANCES

A. Formed Surfaces: Conform with applicable requirements of ACI 117.

1. Where elastomeric bearing pads are indicated, the level plane upon which bearing pads are placed shall not vary more than 1/16-inch from a 10-foot straightedge placed in any direction across the area and the area shall extend a minimum of 1 inch beyond the limits of the pads.

2. Bearing surfaces of girders on a slope or girders with a camber shall be finished on a horizontal/level plane so that loads are uniformly distributed over the entire surface of the elastomeric bearing pads.

3. The finished plane shall not vary more than 1/8-inch from the elevation indicated.

B. Slabs and Flatwork: Conform to applicable classification requirements of ACI 117, as follows:

1. Very Flat Tolerance: True plane with maximum variation of 1/8-inch in 10 feet when measured with a 10-foot straightedge placed anywhere on the slab in any direction.

2. Flat Tolerance: True plane with maximum variation of 3/16-inch in 10 feet when measured with a 10-foot straightedge placed anywhere on the slab in any direction.

3. Straightedge Tolerance: True plane with maximum variation of 5/16-inch in 10 feet when measured with a 10-foot straightedge placed anywhere on the slab in any direction.

4. Bullfloated Tolerance: True plane with maximum variation of 1/2-inch in 10 feet when measured with a 10-foot straightedge placed anywhere on the slab in any direction.

3.05 Curing

A. Curing Standards: Cure concrete in accordance with applicable requirements of ACI 301 and ACI 308, except that the duration of the curing period shall be ten days. Curing of concrete shall also conform to Section 03 30 00, Cast-In-Place Concrete.

B. Curing Requirements:

1. Cure concrete with waterproof sheet materials, damp burlap, or curing compounds.

2. Do not use curing compounds on surfaces when their use may be detrimental to bonding of concrete, mortar, membrane waterproofing, calking and sealants, adhesives, plaster, paint, or the specified surface finish or coating.

3. Cure color-hardener finished slabs and flatwork as recommended by the color-hardener material manufacturer.

4. Cure integrally colored concrete as specified herein.

5. At the expiration of the curing period, clean concrete surfaces of all curing media.

C. Damp Curing:

1. Vertical surfaces shall be cured by keeping the forms wet at all times and by leaving the forms in place as long as possible as specified in Section 03 11 00, Concrete Forming. After removal of forms, concrete shall be kept continuously damp by fog spraying or otherwise washing down the concrete in an accepted manner until ten days after placing. Protect exposed surfaces by covering with sheet materials or burlap kept continuously moist.

2. Horizontal surfaces shall be cured and protected by covering the finished surfaces with waterproof sheet materials or damp burlap, left in place for a minimum of ten days and kept continuously moist.

3. Fog spray freshly placed slabs until finishing operations commence. Allow no slabs to become dry until finishing operations are complete.

D. Curing Compound: Non-structural concrete, such as slabs-on-grade, may be cured by membrane curing compound in lieu of wet curing specified above. Apply curing compound in accordance with applicable requirements of ACI 308 and manufacturer's instructions. Apply without delay on newly finished surface. Protect integrity of membrane and touch up damaged spots immediately.

3.06 Protection

A. Protect exposed concrete surfaces, including flatwork, as required to prevent damage from impact or strains.

B. Protect fresh concrete from drying winds, rain, damage, or soiling.

C. Refer to Section 03 30 00, Cast-In-Place Concrete, for additional requirements.

D. Prevent contamination of planting areas during washing of washed aggregate finish.

END OF SECTION

THIS PAGE INTENTIONALLY LEFT BLANK

SECTION 036111

NON-SHRINK GROUT

PART 1 - GENERAL

1.01 SECTION INCLUDES

A. Cementitious Grout

B. Epoxy Grout

C. Epoxy Adhesive

1.02 RELATED SECTIONS

A. Masonry grout for filling cells of unit masonry is specified in Section 04 22 00, Concrete Unit Masonry.

1.03 DEFINITION:

For the purpose of these Specifications, "non-shrink grout" shall be defined as a high-strength mortar or grout which does not shrink in the plastic state, is dimensionally stable in the hardened state, and bonds permanently to a clean metal baseplate and concrete substrate.

1.04 REFERENCES

1. American Concrete Institute (ACI):

    a. ACI 503.2 — Specification for Bonding Plastic Concrete to Hardened Concrete with a Multi-Component Epoxy Adhesive

2. American Society for Testing and Materials (ASTM):

    a. ASTM C109 — Test Method for Compressive Strength of Hydraulic Cement Mortars (Using 2-in. or 50-mm Cube Specimens)

    b. ASTM C157 — Test Method for Length Change of Hardened Hydraulic-Cement Mortar and Concrete

    c. ASTM C579 — Test Methods for Compressive Strength of Chemical-Resistant Mortars, Grouts, Monolithic Surfacings and Polymer Concretes

    d. ASTM C827 — Test Method for Change in Height at Early Ages of Cylindrical Specimens from Cementitious Mixtures

    e. ASTM C881 — Specification for Epoxy-Resin-Base Bonding Systems for Concrete

    f. ASTM C1090 — Test Method for Measuring Changes in Height of Cylindrical

Specimens from Hydraulic-Cement Grout

g. ASTM C1107 Specification for Packaged Dry, Hydraulic-Cement Grout (Non-shrinkable)

3. U. S. Army Corps of Engineers, Concrete Research Division (CRD):

a. CRD-C620 Standard Method of Sampling Fresh Grout

b. CRD-C621 Non-shrink Grout

1.05 SUBMITTALS

1. General: Refer to California Department of Transportation (Caltrans), Standard Specifications (2010), Section 5, Control of Work for submittal requirements and procedures.

2. Product Data: Submit manufacturer's product data and installation instructions.

3. Certification: Submit certificates of compliance or laboratory test reports which indicate the following:

a. Materials used in the grout are free from metallic components and corrosion-producing elements.

b. Materials meet specified shrinkage and compressive strength requirements.

1.06 ENVIRONMENTAL REQUIREMENTS

Handle grout the same as concrete with regard to temperature and curing, as specified in Section 03 30 00, Cast-In-Place Concrete, and Section 03 35 00, Concrete Finishing.

PART 2 - PRODUCTS

2.01 MATERIALS

A. Cementitious Grout: Provide non-shrink, non-metallic, non-corrosive cement-based grout conforming to the following requirements:

1. Applicable Standards: ASTM C1107 and CRD-C621.

2. Grout shall be manufactured specifically for use in supporting heavy loads (loads in excess of 300 pounds per square foot concentrated load or 100 pounds per square foot uniform load). Grout: ASTM C1107, Grade A, B, or C, as appropriate for the condition or circumstance.

3. Shrinkage at 28 days: No shrinkage before hardening (0.00 shrinkage when tested in accordance with ASTM C827); no shrinkage after hardening (0.00 shrinkage when tested in accordance with CRD-C621).

4. Compressive strength, minimum:

a. At one day: 1000 psi
b. At three days: 2500 psi
c. At seven days: 3500 psi
d. At 28 days: 5000 psi

5. Initial setting time, after addition of water: approximately one hour at 70 degrees F.

6. Provide nonsag trowelability or flowability as necessary for the particular application.

B. Water: Clean and potable, free of impurities detrimental to grout.

C. Epoxy Grout: Provide non-shrink, non-metallic, non-corrosive epoxy grout conforming to the following requirements:

1. Grout shall be manufactured specifically for use in supporting heavy loads.

2. Shrinkage at 28 days: None (0.00 shrinkage when tested in accordance with ASTM C827 modified procedure) with a minimum effective bearing area (EBA) of 95 percent coverage of the tested base plate.

3. Compressive strength, minimum: 10,000 psi at seven days, when tested in accordance with ASTM C579.

4. Initial setting time: Approximately one hour at 70 degrees F.

5. Provide flowable consistency as necessary for the particular application.

6. Epoxy grouts which are volatile and which give off noxious fumes are not acceptable.

D. Epoxy Adhesive: ASTM C881, Type V, epoxy-based bonding agent.

2.02 MIXING

A. Mix grout ingredients for both cementitious grout and epoxy grout in accordance with the respective manufacturer's mixing instructions and recommendations. Mix grout materials in proper mechanical mixers.

B. Mix grout as close to work area as possible.

2.03 SOURCE QUALITY CONTROL

A. Inspections and Tests: Perform visual inspections and shrinkage tests using an appropriate independent testing laboratory, and strength tests as necessary to verify performance requirements of grout. Sampling and testing of grout shall conform with applicable ASTM or CRD-C620 requirements.

B. Visual Inspections: Perform visual inspection of the grout mixing and placement to determine and verify that grout consistency, slump, and stiffness are appropriate and proper for the location and type of installation.

C. Shrinkage Tests:

1. Cementitious Grout: Grout shall meet the following performance requirements:

a. Expansion: 0.4 percent maximum at 3, 14, and 28 days. Grout shall exhibit no displacement when tested in accordance with ASTM C157.

b. Shrinkage: None (0.00 shrinkage at 28 days when tested in accordance with ASTM

C827 and ASTM C1090). There shall be no vertical volume shrinkage of grout in the plastic or hardened stage at any time.

2. Epoxy Grout: Grout shall meet the following performance requirements:

   a. Expansion: Grout shall exhibit no displacement when tested in accordance with ASTM C827 and ASTM C157, modified procedures.

   b. Shrinkage: None (0.00 shrinkage when tested in accordance with ASTM C827, modified procedure; specific gravity of indicator ball will be changed to approximately 1.0).

   c. Effective Bearing Area: 95 percent minimum coverage of the tested base plate.

D. Strength Tests: Compressive strength of grout shall meet the following requirements:

1. Cementitious Grout: 5,000 psi minimum at 28 days when tested in accordance with ASTM C109.

2. Epoxy Grout: 10,000 psi minimum at 7 days when tested in accordance with ASTM C579.

PART 3 - EXECUTION

3.01 SURFACE PREPARATION

A. Concrete surfaces to receive grout shall be prepared by chipping, sandblasting, water blasting, or other accepted methods to remove defective concrete, laitance, dirt, oil, grease, and other foreign matter to achieve sound, clean concrete surfaces. Lightly roughen concrete for bond, but not enough to interfere with proper placement of grout.

B. Cover concrete areas with protective waterproof covering until ready to place grout.

C. Remove foreign matter from steel surfaces to be in contact with grout. Clean contact steel surfaces as necessary by wire brushing and wiping dust clean.

D. Align and level components to be grouted, and maintain in final position until grout placement is complete and accepted.

E. Install forms for grout around the column base plates and other spaces to be grouted. The tops of such forms shall be one inch above the surfaces to be grouted.

F. Remove protective waterproof covering and clean contaminated surfaces immediately before grouting.

G. Provide air-relief holes in large baseplates and in baseplates where underneath obstructions may cause air entrapment.

H. Saturate concrete surfaces with clean water, and remove excess water immediately before grouting.

I. Where necessary or appropriate for better bond, epoxy adhesive may be applied to clean, dry substrate surfaces in accordance with applicable requirements of ACI 503.2.

3.02 PLACING GROUT

A. Place grout in accordance with the respective manufacturer's installation instructions and

recommendations. Pour grout from one side only until grout rises at least one inch above the plate on opposite side of said plate. Strapping and plunging or other recommended method may be used to force grout to flow under the entire area.

B. Neatly trowel edges of grout base, tapered at an angle of 60 degrees when measured from the horizontal, or as indicated. Provide dry-pack cementitious grout where additional grout is required for shoulders.

C. Do not remove leveling shims for at least 48 hours after grout has been placed.

D. After shims have been removed, if used, fill voids with grout, packing the material with a suitable tool.

E. Do not use grout which has begun to set or if more than one hour has elapsed after initial mixing.

3.03 CURING

A. Cementitious grout shall be cured the same as specified for concrete in Section 03 35 00, Concrete Finishing.

B. Epoxy grout shall be cured as recommended by the grout manufacturer.

PART 4 - MEASUREMENT AND PAYMENT

4.01 MEASUREMENT

Grout work will not be measured separately for payment.

4.02 PAYMENT

Grout work will be paid for as part of the indicated Contract price for the work or structure in which the grout is used.

END OF SECTION 03 61 11

SECTION 042200

CONCRETE MASONRY UNITS

PART 1 - GENERAL

1.1 SUMMARY

A. Section Includes:
1. Concrete Masonry Units
2. Epoxy Bonding Adhesive
3. Control Joint Materials
4. Joint Reinforcement
5. Reinforcing Steel
6. Precast Beams, Lintels and Copings
7. Mortar
8. Grout
9. Surface Sealer

1.2 REFERENCES

A. American Concrete Institute (ACI):
1. ACI 530 Building Code Requirements for Masonry Structures
2. ACI 530.1 Specifications for Masonry Structures

B. American Society for Testing and Materials (ASTM):
1. ASTM C33 Specification for Concrete Aggregates
2. ASTM C90 Specification for Hollow Load-Bearing Concrete Masonry Units
3. ASTM C91 Specification for Masonry Cement
4. ASTM C94 Specification for Ready-Mixed Concrete
5. ASTM C109 Test Method for Compressive Strength of Hydraulic Cement Mortars (Using 2-in. or 50-mm Cube Specimens)
6. ASTM C143 Test Method for Slump of Hydraulic Cement Concrete
7. ASTM C144 Specification for Aggregate for Masonry Mortar
8. ASTM C150 Specification for Portland Cement
9. ASTM C207 Specification for Hydrated Lime for Masonry Purposes
10. ASTM C270 Specification for Mortar for Unit Masonry
11. ASTM C404 Specification for Aggregates for Masonry Grout
12. ASTM C476 Specification for Grout Masonry
13. ASTM C881 Specification for Epoxy-Resin-Base Bonding Systems for Concrete
14. ASTM C979 Specification for Pigments for Integrally Colored Concrete
15. ASTM C1006 Test Method for Splitting Tensile Strength of Masonry Units
16. ASTM C1019 Test Method for Sampling and Testing Grout

C. State of California, Department of Transportation, 2006 Standard Specifications and Amendments, (Caltrans):
1. Section 52 Reinforcement
2. Section 90 Portland Cement Concrete

1.3 REGULATORY REQUIRMENTS

A. In addition to the foregoing referenced standards, the regulatory requirements that govern the work of this Section include the following governing code:

California Code of Regulations (CCR), Title 24, Part 2, California Building Code, Chapter 21, “Masonry,” and Chapter 21A, “Masonry.”

1.4 SUBMITTALS

A. Product Data: Submit manufacturer's product data for block, including available color range, epoxy adhesive, joint reinforcement, and control-joint materials, along with installation instructions where applicable.

05/03/13 PERMIT SET

B. Working Drawings:
   1. Submit detailed working drawings of unit masonry, showing type of mortar joints, bond pattern, reinforcing steel, connecting dowels, joint reinforcement, grouted cells, and control joints.
   2. Submit calculations and working drawings for temporary supports of masonry lintels. Design and construct temporary supports to provide the necessary rigidity and to support loads which will be applied. Design calculations and working drawings must be stamped and signed by an engineer who is registered as a Civil or Structural Engineer in the State of California. The expiration date of the registration must be shown.

C. Samples: Submit full-size samples of block and samples of colored mortar for approval. Block and colored joint mortar require approval of the Engineer before they may be used in the concrete masonry work.

D. Grout Mix Design: Submit a grout mix design for each grout mix proposed for use. Submit a revised grout mix design for any proposed change to the proportions of an approved grout mix.

E. Qualification Data: Submit qualification data for proposed testing laboratory.

F. Certificates: Submit certification stating that concrete masonry units meet specification requirements and that masonry units conform with the special strength requirements of these Specifications. Each certificate shall be signed by the masonry unit manufacturer and shall contain the name of the manufacturer, the project location, and the quantity and dates of shipment or delivery to which the certificate applies.

G. Field Quality Control Plan:
   1. Submit a written Field Quality Control Plan that identifies the inspector, the testing laboratory, and the procedures to be used. The plan must conform to these specifications and the CBC.
   2. Designate a Masonry Quality Control Manager (MQCM) in the Field Quality Control Plan. The MQCM must be directly responsible to the Contractor for the quality of masonry, including materials and workmanship, performed by the Contractor and subcontractors.
   3. The MQCM must be the sole individual responsible to the Contractor for submitting, receiving, and approving all correspondence, required submittals, and reports to and from the Engineer.
   4. The MQCM must be the sole individual responsible to the Contractor for submitting, receiving, and approving all correspondence, required submittals, and reports to and from the Engineer.

1.5 QUALITY ASSURANCE

A. Concrete unit masonry work shall conform with applicable requirements of the California Building Code, Chapters 21 and 21A, ACI 530, and ACI 530.1, except as modified in these Specifications.

B. Construction tolerances for concrete unit masonry shall conform with ACI 530.1.

1.6 DELIVERY, STORAGE, AND HANDLING

A. Deliver masonry materials to the project in an undamaged condition.

B. Store CMUs on elevated platforms in a dry location. If CMUs are not stored in an enclosed location, cover tops and sides of stacks with waterproof sheeting, securely tied. If CMUs become wet, do not install until they are dry.

C. Store cementitious materials on elevated platforms and in a dry location. Do not use cementitious materials that have become damp.

D. Store aggregates where grading and other required characteristics can be maintained and contamination avoided.

E. Store masonry accessories, including metal items, to prevent corrosion and accumulation of dirt and oil.

F. Prevent damage, contamination, corrosion, or other deterioration to masonry materials when handling.

1.7 PROJECT CONDITIONS

A. Protection of Masonry: Cover partially completed masonry, tops of walls, projections, and sills with waterproof sheeting when construction is not in progress.

B. Stain Prevention:
   1. Prevent grout, mortar, and soil from staining the face of masonry to be left exposed or painted. Immediately remove grout, mortar, and soil that come in contact with such masonry.
   2. Protect the base of walls from rain-splashed mud and from mortar splatter by spreading coverings on the ground and over wall surfaces.
   3. Protect sills, ledges, and projections from mortar droppings. Protect surfaces of door frames, and other similar products with painted and integral finishes, from mortar droppings.

PART 2 - PRODUCTS

2.1 MATERIALS

A. Concrete Masonry Units (Concrete Block):
   1. Concrete masonry units shall be of modular face dimensions and thicknesses indicated. Furnish necessary shapes and sizes, bond-beam units, and corner units as required to satisfy conditions indicated. Include half-size units where indicated or required. Units shall be closed-end.
   2. Concrete masonry units shall be hollow load-bearing units conforming to ASTM C90, and shall be No. 1 Normal Weight, Type I - Moisture Controlled Units, minimum Grade N. Units shall have a maximum linear shrinkage of 0.06 percent, and shall meet water absorption requirements of ASTM C90.
   3. Concrete masonry units shall be normal cement-colored units with standard face surfaces.

B. Burnished Block (Ground-face) Concrete Masonry Units:
   1. Face: Smooth ground textured, exposed aggregate honed appearance.
   2. Concrete masonry units shall be normal cement-colored units.
   3. Concrete masonry units shall be of modular face dimensions and thicknesses indicated. Furnish necessary shapes and sizes, bond-beam units, and corner units as required to satisfy conditions indicated. Include half-size units where indicated or required. Units shall be closed-end.
   4. Concrete masonry units shall be hollow load-bearing units conforming to ASTM C90, and shall be No. 1 Normal Weight, Type I - Moisture Controlled Units, minimum Grade N. Units shall have a maximum linear shrinkage of 0.06 percent, and shall meet water absorption requirements of ASTM C90.

C. Mortar Cement: ASTM C150, Type II Portland cement, low alkali.

D. Grout Cementitious Material: Cementitious material must comply with Section 90-2.01C, "Required Use Of Supplementary Cementitious Materials," of the Standard Specifications and include one of the following:
   1. Cement complying with ASTM C 150, Type II, and supplementary cementitious material.
   2. Blended hydraulic cement complying with ASTM C 595, Type IP (MS).

E. Lime: ASTM C207, hydrated, Type S.

F. Mortar Sand: ASTM C144, natural sand, clean and graded.

G. Mortar Coloring Pigment: ASTM C979, manufactured, inert mineral oxides in color or colors as selected and approved by the Engineer.

H. Grout Aggregate: ASTM C33 or ASTM C404, clean and graded concrete aggregates, proportioned by volume as follows: 3 parts fine and graded concrete aggregate to 2 parts of graded 3/8-inch maximum size coarse aggregate. Soundness loss must not exceed 10 percent when tested under California Test 214.

I. Water: Fresh, clean and potable, and free from such amounts of mineral and organic substances as would adversely affect the hardening of cement mortar.

J. Epoxy Bonding Adhesive: Adhesive for bonding of mortar bed to concrete slabs shall be an epoxy-based bonding agent conforming to ASTM C881, Type V, tinted to show by visual inspection where it has been applied.

K. Control Joint Materials: Conform with requirements of ACI 530.1.

L. Joint Reinforcement: No. 9 gage ladder or truss type steel wire conforming to ACI 530.1.

M. Reinforcing Steel: Provide reinforcing steel for grouted block masonry under this Section in accordance with the requirements of Section 52, "Reinforcement," of the Standard Specifications and the project special provisions, and ACI 530.1.

2.2 MORTAR

A. Mortar Type and Mixing Requirements:
   1. Mortar for grouted unit masonry shall be Type S mortar in accordance with the California Building Code, Chapter 21 and 21A, ACI 530.1, and ASTM C270, with a minimum compressive strength at 28 days of 1,500 psi.
   2. The use of an admixture for the purpose of reducing water content in mortar will be permitted, provided the strength of the mortar is not reduced.
   3. Mortar shall be job mixed and, in lieu of specific requirements specified herein, shall conform with ASTM C270, including measurement, mixing, proportioning, and water retention.
   4. Accurately measure mortar ingredients and mix a minimum of three minutes after water has been added, in a mechanical batch mixer, using sufficient water to produce a workable and plastic consistency.
   5. Use mortar within 2-1/2 hours after mixing when air temperature is 80 degrees or higher, and within 3-1/2 hours when air temperature is below 80 degrees. Discard any mortar that has been mixed longer or that has begun to set. If necessary, mortar may be retempered within this time limit, by replacing only water lost due to evaporation and by thorough remixing.

B. Colored Joint Mortar: Provide colored mortar for exposed masonry joints where indicated. Color shall be as approved by the Engineer from samples prepared and submitted by the Contractor. Pigment amount for selected color and mixing of colored mortar shall conform with the pigment manufacturer's instructions.

2.3 GROUT

A. Grout shall be Coarse Grout, as defined in ASTM C476, with a minimum compressive strength at 28 days of 2,500 psi, and shall be proportioned by volume in accordance with ACI 530.1.

B. Grout mix shall be designed in accordance with ASTM C94 for manufacturer designed mixes, and for handling by an approved grout pump. Slump shall be 10 inches.

C. The use of an admixture for the purpose of reducing water content in grout and adding flowability will be permitted, provided the strength of the grout is not reduced. Admixture shall be added to the mix as recommended by the manufacturer for the purpose intended.

2.4 SURFACE SEALER

A. Provide a water-based, VOC-compliant, clear, penetrating water-repellent sealer, designed to provide long-term protection against water absorption, for exterior concrete unit masonry surfaces. Submit sealer performance data and VOC compliance verification for approval.

PART 3 - EXECUTION

3.1 LAYING CONCRETE MASONRY UNITS

A. Installation Standards: Comply with applicable requirements of ACI 530.1 and Section 2104, “Construction,” of the CBC.

B. Requirements: Construct concrete unit masonry to dimensions indicated. Concrete masonry units shall be dry when laid. Avoid using less than half-size units in exposed locations. Do not expose cells on any surface. Where concealed, spaces not large enough for full or half-size units may be filled with concrete building brick or mortar.

C. Work Quality:
   1. Masonry work shall be performed by skilled and experienced masons. Erect walls plumb and true to line, with courses level and joints uniform in width, using specified mortar. Vertical joints shall line up plumb in exposed walls.

2. Concrete masonry units shall be sound and free of cracks and surface defects. Handle units carefully to avoid chipping and breaking. Do not substitute cut units where special shapes are available.
3. Where pipes penetrate masonry, point neatly and accurately around pipes and ducts.

D. Cutting of Units: Cutting of units shall be kept to a minimum. Perform cutting accurately to accommodate items passing through or embedded in masonry, to meet surfaces that masonry abuts, and to fit various conditions. Cutting of masonry units shall be performed with a power-driven masonry saw. Rub cuts smooth and even with carborundum or emery stone.

E. Bedding and Jointing:
1. Use full mortar bed and coverage on horizontal and vertical face shells of hollow units. Webs also shall be bedded in mortar. Shove vertical joints tight.
2. Top surfaces of concrete foundations or other bed joints shall be clean concrete with aggregate exposed before start of laying. Tops of foundations shall be roughened and cleaned to remove laitance for exposing aggregates in the concrete. Where block is to be laid on slabs, bed joints shall be roughened and cleaned, and an epoxy bonding adhesive shall be applied before laying first course of block.

F. Joint Reinforcement: Provide ladder or truss type joint reinforcement, spaced a maximum of 16 inches on center vertically. Place in accordance with ACI 530.1, fully embedded in mortar.

G. Bond Pattern: Lay masonry units in running bond.

H. Alignment of Vertical Cells: Masonry shall be built to preserve the unobstructed vertical continuity of the cells. The vertical alignment shall be sufficient to maintain a clear, unobstructed vertical flue, measuring not less than 3 inches in all directions for grouted masonry.

I. Cleanouts: Cleanout openings shall be provided at the bottoms of cells to be filled with grout. Mortar droppings shall be removed from cells, and cleanouts shall be sealed after inspection and before grout placement.

J. Pipe Chases: Chases and recesses for pipes shall be formed as masonry work is constructed. Do not enclose piping until it has been tested and approved. Make such chases and recesses plumb, with inside joints struck flush, and the interiors kept free of obstructions and cleaned-out upon completion.

K. Anchorage and Embedded Items:
1. Set accurately in place and bond into masonry, as the masonry work progresses, bolts, straps, hangers, sleeves, anchors, inserts, frames for doors and louvers, and any other anchorage items or attachments as indicated. Provide suitable recesses for other items to be built into masonry. Consult with other trades in advance so their work can be accommodated at correct locations, as masonry work progresses, to avoid cutting and patching.
2. Cells containing anchorage or built-in items shall be grouted solid.
3. Where masonry is laid against concrete or metal, the joints between shall be filled with mortar as each course is laid.

L. Joint Finishing:
1. Pack mortar tightly in joints and wipe wall faces clean as work progresses. Unless otherwise indicated, exposed joints shall be densely tooled concave and smooth with joint tool when mortar is thumbprint hard.
2. Rake out joints around metal frames in openings 3/4-inch deep for sealant to be applied.
3. Nominal joint size, both vertical and horizontal, shall be 3/8 inch.

M. Joining Work: Step back unfinished work for joining with new work. Toothing shall be resorted to only where unavoidable. Before starting or resuming work, remove loose mortar and foreign matter from work in place, and clean all surfaces of work to be joined.

N. Control Joints: Provide control joints where indicated. Comply with ACI 530.1.

3.2 REINFORCING STEEL

A. Provide reinforcing steel for grouted masonry as indicated. Comply with applicable requirements of ACI 530.1 and Section 52, "Reinforcement," of the Standard Specifications, and the project special provisions .

05/03/13 PERMIT SET

B. Vertical reinforcing bars shall be placed prior to laying the wall and shall be held in place by standard reinforcing supports. Vertical bars shall be held in position at top and bottom and at intervals not exceeding 190 diameters of the reinforcement or 9 feet, whichever is less. Vertical reinforcing steel shall have a minimum clearance of 1 inch from the masonry. Tolerances for the placement of vertical reinforcement must be ± ½ inch.

C. When a foundation dowel does not line up with a vertical core, it shall not be sloped more than one horizontal in six vertical. Dowels shall be grouted into a core in vertical alignment, even though it is an adjacent cell to the vertical wall reinforcing.

D. Horizontal reinforcing bars for bond-beam or channel units shall be laid on the webs of the units in continuous masonry courses, and shall be solidly embedded in mortar and grout. Horizontal bars shall be tied to vertical bars as the block work progresses. Placing of horizontal reinforcing bars in mortar joints will not be permitted.

E. Reinforcing bars shall be straight except for bends around corners and where bends or hooks are indicated.

F. Reinforcing steel shall be lapped in accordance with ACI 530, Chapter 8. Length of lapped splices shall be not less than 40 bar diameters. Lapped splice bars shall be wire-tied together for the entire length of the splice.

3.3 GROUTING

A. Grouting Requirements:
   1. All cells of concrete unit masonry shall be filled solid with grout. Cells containing reinforcement and anchorage or built-in items shall be filled solid with grout. Comply with applicable requirements of ACI 530.1.
   2. Spaces around metal frames and other built-in items shall be filled solid with grout or mortar.
   3. Reinforcing steel shall be secured in place, inspected, and approved before grouting starts.
   4. Mortar droppings and projections shall be kept out of the grout space. Webs, wythes, and reinforcement shall be cleaned of mortar droppings before grout is placed.
   5. Grout shall be rodded, puddled, or vibrated in place.
   6. Cells shall be filled solid with grout, and pours shall be stopped 1-1/2 inches below the top of a course to form a key at pour joints, except if the joint is at a bond beam, the joint must be ½ inch below the top of the bond beam unit or at the top of the wall.
   7. Grouting of beams over openings shall be performed in one continuous operation.

B. Grout Construction:
   1. Grout construction, including grout placement and consolidation, shall conform with applicable requirements of ACI 530.1, except as otherwise specified herein.
   2. Grout shall be placed in lifts not to exceed 4 feet, with a waiting period of one hour between lifts. The full height of the wall or masonry section shall be placed in one day.
   3. Rod or vibrate grout thoroughly the entire height of the pour when first placed to push grout into all spaces and interstices. After the waiting period of an hour, place second lift and rod or vibrate the pour again to penetrate not more than half way into the first lift. Repeat this placing operation, waiting period, and consolidating technique until the top is reached. The top pour or lift shall likewise be reconsolidated after waiting period to allow excess water to be absorbed and escape.

3.4 REPAIRING AND POINTING

A. Upon completion of the work, carefully examine masonry surfaces and cut out and replace broken or defective units. Install new units in fresh mortar to match adjoining units, and point joints to eliminate evidence of replacement. Rake out defective mortar joints and repoint.

B. Remove protective paper. Clean surfaces and polish to uniform luster. Exercise care to avoid damage of finishes.

C. Wash glass on interior and exterior to remove paint, soil, prints and foreign matter. Clean glass only with mild detergent and water following glass manufacturer's instructions. Do not use abrasive materials.

3.5 CLEANING

A. After erection and pointing, masonry shall be cleaned down with stiff brushes and water, followed by a thorough rinsing with clean water. All mortar deposits, stains, or other foreign matter shall be removed from masonry surfaces.

B. After masonry has been fully grouted, laitance and stains that have percolated through the blocks and mortar joints shall be hosed off with water under pressure.

C. The Engineer may direct that certain masonry surfaces or areas be cleaned with a commercial masonry cleaner manufactured for the purpose, in which case follow the instructions or recommendations of the masonry-cleaner manufacturer for cleaning method.

3.6 CURING

A. Masonry work and top of the grout pour shall be damp-cured for at least 7 days to prevent too rapid drying during hot or drying weather, and drying winds.

B. Walls shall be kept moist or damp with water from a fogging nozzle, but shall not be wet to the point that free water drops from the surface.

3.7 SEALER APPLICATION

A. Preparation: Surfaces receiving sealer shall be thoroughly dry and free of all construction stains, surface dirt, and efflorescence.

B. Application: Apply sealer, where concrete unit masonry is exposed to the weather, in accordance with the manufacturer's application instructions and recommendations.

3.8 FIELD QUALITY CONTROL

A. Special Inspection:
   1. The Contractor shall employ a special inspector and a testing laboratory to perform inspections and structural tests of masonry to verify the masonry construction conforms to Section 1704, “Special Inspections,” and Section 2105, “Quality Assurance,” of the CBC.
   2. Masonry special inspection personnel or testing laboratories used in the work must not be employed or compensated by any subcontractor, or by other persons or entities hired by subcontractors, who will provide other services or materials for the project.
   3. The special inspector must be, as a minimum, an ICC certified Structural Masonry Special Inspector. The special inspector must perform the inspections required under Section 1704.5, "Masonry construction" of the CBC.
   4. The special inspector must prepare a "Daily Field Report" providing information regarding the specific operations witnessed, including placing of CMUs and bar reinforcing, grouting, fabrication of test specimens, and other observations of importance to the work.
   5. A "Daily Field Report" is required for each day that the special inspector is on the jobsite. Deliver a copy of these reports to the Engineer on the day following the preparation.
   6. The special inspector must submit a final signed report to the Engineer and to you stating whether the work requiring special inspection was, to the best of the inspector's knowledge, in conformance with the approved plans, specifications, and the applicable workmanship provisions of these specifications and the CBC.

B. Slump Tests: Perform slump tests of grout during grout placement in accordance with ASTM C1019 and ASTM C143.

C. Strength Tests: Provide laboratory tests conforming to the following requirements:
   1. Concrete Masonry Units: Tensile strength tests shall be performed in accordance with ASTM C1006. Three units shall be tested for each 2,000 square feet of wall area.
   2. Mortar: Compressive strength tests shall be performed in accordance with ASTM C109. Three cubes shall be tested for each 2,000 square feet of wall area, one at seven days and two at 28 days.
   3. Grout: Compressive strength tests shall be performed in accordance with ASTM C1019. Three square prisms shall be tested for each 2,000 square feet, or fraction thereof, of wall area.

D. Test Reports: Submit certified copies of all test results to the Engineer for record purposes.

05/03/13 PERMIT SET

E. Rejection of Masonry; Repair and Replacement: The Engineer shall have authority to reject concrete masonry work that does not meet specification requirements, and to require repair or replacement as necessary to complete the concrete masonry work. Additionally, any work not meeting the requirements of Section 2105, “Quality Assurance,” of the CBC, must be redone and retested. Sampling, inspecting, reworking, and retesting of material will be done at the Contractor’s expense.

END OF SECTION

05/03/13 PERMIT SET

SECTION 053000

METAL DECKING

PART 1 - GENERAL

1.1 SUMMARY

A. Section Includes:
   1. Floor Decking
   2. Accessories
   3. Galvanizing Repair Materials

1.2 REFERENCES

A. American Society for Testing and Materials (ASTM):
   1. ASTM A446/A446M — Specification for Steel Sheet, Zinc-Coated (Galvanized) by the Hot-Dip Process, Structural (Physical) Quality
   2. ASTM A653/A653M — Specification for Steel Sheet, Zinc-Coated (Galvanized) or Zinc-Iron Alloy-Coated (Galvannealed) by the Hot-Dip Process
   3. ASTM A780 — Practice for Repair of Damaged and Uncoated Areas of Hot-Dip Galvanized Coatings Specification for Masonry Cement

B. Steel Deck Institute (SDI):
   1. SDI Publication No. 27 — Design Manual for Composite Decks, Form Decks, Roof Decks and Cellular Metal Floor Deck with Electrical Distribution Hot-Dip Process, Structural (Physical) Quality

C. American Welding Society for Testing and Materials (AWS):
   1. AWS D1.1 — Structural Welding Code – Steel
   2. AWS D1.3 — Structural Welding Code – Sheet Steel

1.3 REGULATORY REQUIRMENTS

A. In addition to the foregoing referenced standards, the regulatory requirements that govern the work of this Section include the following governing code:

   California Code of Regulations (CCR), Title 24, Part 2, California Building Code, Chapter 21, “Masonry,” and Chapter 21A, “Masonry.”

1.4 SUBMITTALS

A. Working Drawings: Submit detailed Working Drawings of metal decking, showing complete erection layouts, grade, size, section profile, and thickness of decking, lapping of decking, locations of welds, and method of attachment.

B. Product Data: Submit manufacturer's product data and design data of the floor and roof decking, along with applicable accessories.
   1. Submit product data on galvanizing repair materials.

C. Certification: Submit evidence that the shear capacity of manufacturer's decking has been accepted by the International Conference of Building Officials and that a valid Research Recommendation is on file.

1.5 QUALITY ASSURANCE

A. Qualifications of Welders and Welding Procedures:
   1. Welding processes and welding operators shall be qualified in accordance with "Welder Qualification," procedures in American Welding Society (AWS) D1.1, "Structural Welding Code - Steel.".
   2. Welding decking in place is subject to inspection and testing. Defective work shall be removed and replaced with acceptable work.

1.6 DELIVERY, STORAGE, AND HANDLING

05/03/13 PERMIT SET

A. Metal deck units and accessories shall be transported, stored and erected in a manner that will prevent corrosion, distortion or other damage.

B. Deck units shall be stored off the ground with one end elevated to provide drainage.

PART 2 - PRODUCTS

2.1 MATERIALS

A. Decking: Floor decking shall be formed of steel sheet conforming to ASTM A446/A446M, Grade B minimum, Coating Designation G90 (1.25 ounce commercial zinc coating) conforming to ASTM A653/A653M. Type of decking units, weight of metal (metal gage), and section profile shall be as indicated:
   1. Acceptable manufacturers shall be; Verco Manufacturing Co.; BHP Co.; or equal.

B. Accessories: Provide cell end closures, column flashings, recessed sump pans, and any other closures and flashings as indicated or required for complete and finished installations and as required to prevent leakage of concrete. Provide cover caps for covering abutting ends where required. Accessories and flashings shall be of the same material and gage as the decking. Accessories shall be the decking manufacturer's standard types, galvanized, and shall be provided as follows:
   1. Adjusting plates or segments of deck units in locations too narrow to accommodate full-size units.
   2. End closures to close the open ends at openings, where units terminate at exterior walls, and other locations where required. Closures shall be not lighter than the same gage as the adjacent deck units.
   3. Closures for closing voids above interior walls and partitions that are perpendicular to the direction of the flutes or corrugations. Closures above typical partitions shall be compressible closed cell neoprene or vinyl synthetic rubber.

C. Galvanizing Repair Materials: Conform with requirements of ASTM A780. Commercial cold galvanizing compounds manufactured for the purpose will be accepted provided they meet or exceed requirements of ASTM A780.

2.2 FABRICATION

A. Metal decking and associated metal fabrications shall conform with applicable requirements of the California Building Code, Chapters 22 and 22A, and SDI Publication No. 27.

B. Deck units shall be formed to span 2 or more supports.

C. Fabricate decking for composite construction with shear studs or lugs to provide mechanical key for transferring horizontal shear and for preventing vertical separation. Provide decking with shear studs and hold-down lugs to achieve composite action between decking and concrete fill.

D. Welding shall conform to AWS requirements (D1.1 and D1.3) and procedures for manual shielded metal arc welding, appearance and quality of welds, and methods used in correcting welding work.

E. Steel decking and associated fabrications shall be prefabricated and preassembled in the factory or shop as far as practicable.

F. Galvanized metalwork necessitating welding which in any manner removes or damages original galvanizing shall be restored by galvanizing repair in accordance with ASTM A780.

PART 3 - EXECUTION

3.1 ERECTION AND INSTALLATION

A. Install decking as indicated and in accordance with the approved submittals and the decking manufacturer's installation instructions. Provide decking complete, including shaping, cutting, fitting, drilling, welding, flashings, closure strips, closure plates, fasteners, and accessories necessary for a complete and finished installation.

B. Install decking in straight and continuous rows as far as practicable, with ribs at right angles to structural supporting members. End laps shall occur over bearings only, and where sheets are lapped, end laps shall be not less than 2 inches. Where ends of decking sheets abut without overlapping at supports, each end of decking shall have a minimum bearing of 2½ inch on supports.

05/03/13 PERMIT SET

C. Type of welding, number of welds, size of welds, and locations of welds shall be in accordance with the approved Shop Drawings and the decking manufacturer's installation instructions. Welding shall conform to AWS requirements (D1.1 and D1.3) and procedures for manual shielded metal arc welding, appearance and quality of welds, and methods used in correcting welding work.

D. Welds shall be cleaned immediately by wire-brushing, and shall be coated with galvanizing repair material before being covered by the succeeding sheet.

E. Decking shall be weighted at the point of welding with sand bags or other approved method to hold them in firm contact with each other and structural supports.

F. Secure solid welds where sheets are warped or bent to certain radii and where decking is placed on a slope while supporting members are framed in a straight position.

G. Button punches or crimping devices may not be substituted for welding.

H. Holes and openings for services and other projections through decking shall be cut and fitted neatly and accurately and shall be reinforced as necessary for rigidity and load-carrying capacity.

3.2 GALVANIZING REPAIR

A. Galvanized surfaces which have become damaged from welding, handling, or installation shall be repaired immediately after installation with galvanizing repair material in accordance with ASTM A780. Galvanizing repair shall be performed and completed before concrete is placed.

END OF SECTION

05/03/13 PERMIT SET

SECTION 055000

METAL FABRICATIONS

PART 1 - GENERAL

1.1 SUMMARY

A. Section Includes:
   1. Rough hardware.
   2. Miscellaneous Metals

1.2 SUBMITTALS

A. Product Data: Submit product data for manufactured components indicating type, finish, size, accessories, and anchorage details.

B. Shop Drawings:
   1. Indicate profiles, dimensions, fabrication and installation details, size and type of fasteners, welds, accessory items, shop finish and method of anchorage.
   2. Stamp shop drawings with seal and signature of professional engineer responsible for design.

C. Submit following Informational Submittals: Certifications specified in Quality Assurance article.

1.3 QUALITY ASSURANCE

A. Certifications: Fabricator's statement indicating fabrications are designed, fabricated, and installed to comply with code and Contract Document loading.

1.4 DELIVERY, STORAGE AND HANDLING

A. Deliver, store, and handle products in accordance manufacturer’s instructions.

PART 2 - PRODUCTS

2.1 FERROUS METALS, GENERAL

A. Steel Plates, Shapes and Bars: ASTM A36.
   1. Steel: Maximize use of recycled steel with minimum of 30 percent.

B. Steel Tubing: Cold-formed, ASTM A500.

C. Structural Steel Sheet: Hot-rolled, ASTM A1011/A1011M, Class 1; of grade required for design loading.

D. Galvanized Structural Steel Sheet: ASTM A653, of grade required for design loading. Coating designation; G90.

E. Steel Pipe: ASTM A53; type and grade (if applicable) as selected by fabricator and as required for design loading; black finish unless otherwise indicated.

2.2 SURFACE PREPARATION AND APPLICATION

A. Steel surfaces to be primed must be dry and free of dirt, oils, rust, salt and other contaminants.

B. Blast-clean steel to "commercial grade" SSPC SP-6 for general use.

C. Apply primers in accordance with manufacturer's instructions.

2.3 UNIVERSAL PRIMER

A. Locations: Interior steel in conditioned space.

B. Manufacturer's standard, lead free primer, capable of providing sound foundation for field applied top coats despite prolonged exposure.

C. Standard: FS TT-P-645.

D. Maximum Allowable Dry Time: 4 hours to touch; 24 hours to re-coat.

E. Compatible with finish paint system specified in 099000.

F. Acceptable Products:
   1. Series 115 Uni-Bond, Tnemec Company, Inc., Kansas City, MO.
   2. Carboguard 890 VOC, Carboline Company, St. Louis, MO.

2.4 ZINC-RICH PRIMER

A. Locations: Exterior or areas subject to unconditioned, high humidity.

B. Inorganic, zinc-rich, capable of providing sound foundation for field applied top coats despite prolonged exposure, cathodic protection and corrosion resistance. Similar to galvanizing.
   1. Pigment Content: Minimum 63% zinc in dry film by weight.
   2. Compatible with finish paint system specified in 099000.
   3. Acceptable Products:
      a. Tnemec H90-97 Tneme-Zinc, Tnemec Co., Kansas City, MO.
      b. Carbo-Zinc 859 VOC, Carboline Company, St. Louis, MO.
      c. ZRC Cold Galvanizing Compound, ZRC Products Company, Quincy, MA.

2.5 FABRICATION, GENERAL

A. Field verify dimensions prior to shop fabrication.

B. Minimize joints and seams by using largest stock sizes practical.

C. Locate multiple joints at regular intervals and at least conspicuous locations.

D. Form flush, tight, hairline joints and seams. Continuously weld joints and seams to develop the full strength of the jointed members.

E. Miter exposed joints. Grind exposed welds, seams and joints to form a smooth, uniform surface.

F. Weld in accord with AWS D1.1 for materials being welded.

G. Ease exposed edges to a minimum, uniform radius of 1/32 inch.

H. Fit and shop assemble sections in largest sizes practical for site delivery.

I. Fabricate work to exclude rain and condensate or provide weep holes to divert water to the exterior.

J. Form break metal corners to the smallest radius possible without distressing the finish surface.

K. Cut, drill, punch, tap, reinforce and provide anchors to accommodate adjoining work and hardware.

L. Provide anchors, bolts, rough hardware, fasteners and accessories required to incorporate and secure fabrications and to make the units functionally operational.

M. Use countersunk, flat head screws and bolts at exposed joints requiring mechanical fasteners.

N. At exposed work, use materials which are smooth, free of surface blemishes, pitting, seam marks, roller marks, trade names and roughness.

2.6 ROUGH HARDWARE

A. Furnish bent or custom fabricated bolts, plates, anchors, hangers, dowels and miscellaneous steel and iron shapes required for framing, supporting, anchoring or securing fixtures, accessories, and furnishings.

B. Straight bolts and other stock rough hardware items are specified in Division 6 sections.

C. Fabricate items to sizes, shapes and dimensions required.

D. Furnish steel washers, except use malleable-iron washers for heads and nuts which bear on wood structural connections.

E. Finish: Same as item being supported or anchored.

2.7 ANGLE FRAMES AND EDGE ANGLES

A. Complete with anchors and bolts. For casting in concrete, space anchors 24 inches OC with 1-1/4 inches by 1/4 inch by 8 inches steel straps.

PART 3 - EXECUTION

3.1 EXAMINATION

A. Examine conditions and proceed with work when substrates are ready.

B. Coordinate and furnish setting drawings, diagrams, templates, instructions, and directions for installation of anchorages, concrete inserts, sleeves, anchor bolts and miscellaneous items having integral anchors which are embedded in concrete or masonry construction.

3.2 INSTALLATION, GENERAL

A. Perform cutting, drilling and fitting required for installation of fabrications.

B. Set work accurately to established lines and levels.

C. Provide temporary bracing and anchors for items which are to be built into concrete, masonry or similar construction.

D. Fit exposed connections together to form tight hairline joints. Weld connections which are left as exposed joints.

E. Grind exposed joints smooth and touch-up shop paint.

F. Do not weld, cut or abrade galvanized surfaces of bolted or screwed connections.

G. Field Welding; comply with AWS Code D1.1.

H. Clean concrete and masonry bearing surfaces of any bond-reducing materials; roughen to improve bond to surfaces. Clean bottom surface of bearing plates.

I. Set loose leveling and bearing plates on wedges, or adjustable devices. After the bearing members have been positioned and plumbed, tighten the anchor bolts. Do not remove wedges or shims, but if protruding, cut flush with edge of bearing plate before packing with grout.

3.3 ADJUST AND CLEAN

A. Touch-Up Painting: Immediately after erection, clean field welds, bolted connections, and abraded areas and paint with same material used for shop painting. Apply by brush or spray to provide a minimum dry film thickness of 2.0 mils.

END OF SECTION

05/03/13 PERMIT SET

SECTION 057000

DECORATIVE METAL

PART 1 - GENERAL

1.1 SUMMARY

A. Section Includes:
   1. Stainless Steel Welded Wire Mesh

1.2 SUBMITTALS

A. Product Data: Submit product data for manufactured components indicating type, finish, size, accessories, and anchorage details.

B. Shop Drawings:
   1. Indicate profiles, dimensions, fabrication and installation details, size and type of fasteners, welds, accessory items, shop finish and method of anchorage.
   2. Stamp shop drawings with seal and signature of professional engineer responsible for design.

C. Submit following Informational Submittals: Certifications specified in Quality Assurance article.

1.3 QUALITY ASSURANCE

A. Certifications: Fabricator's statement indicating fabrications are designed, fabricated, and installed to comply with code and Contract Document loading.

1.4 DELIVERY, STORAGE AND HANDLING

A. Deliver, store, and handle products in accordance manufacturer’s instructions.

PART 2 - PRODUCTS

2.1 MANUFACTURERS

A. Stainless Steel Wire Mesh
   1. Basis of Design: McNichols 2” Square Opening Wire Mesh 0.1880” or approved equal

2.2 ACCESSORIES

A. Stainless Steel Trim Edge as indicated in drawings.

2.3 FABRICATION, GENERAL

A. Field verify dimensions prior to shop fabrication.

B. Minimize joints and seams by using largest stock sizes practical.

C. Locate multiple joints at regular intervals and at least conspicuous locations.

D. Form flush, tight, hairline joints and seams. Continuously weld joints and seams to develop the full strength of the jointed members.

E. Miter exposed joints. Grind exposed welds, seams and joints to form a smooth, uniform surface.

F. Weld in accord with AWS D1.1 for materials being welded.

G. Ease exposed edges to a minimum, uniform radius of 1/32 inch.

H. Fit and shop assemble sections in largest sizes practical for site delivery.

I. Fabricate work to exclude rain and condensate or provide weep holes to divert water to the exterior.

J. Form break metal corners to the smallest radius possible without distressing the finish surface.

K. Cut, drill, punch, tap, reinforce and provide anchors to accommodate adjoining work and hardware.

05/03/13 PERMIT SET

L. Provide anchors, bolts, rough hardware, fasteners and accessories required to incorporate and secure fabrications and to make the units functionally operational.

M. Use countersunk, flat head screws and bolts at exposed joints requiring mechanical fasteners.

N. At exposed work, use materials which are smooth, free of surface blemishes, pitting, seam marks, roller marks, trade names and roughness.

PART 3 - EXECUTION

3.1 EXAMINATION

A. Examine conditions and proceed with work when substrates are ready.

3.2 INSTALLATION, GENERAL

A. Perform cutting, drilling and fitting required for installation of fabrications.

B. Set work accurately to established lines and levels.

C. Fit exposed connections together to form tight hairline joints. Weld connections which are left as exposed joints.

D. Grind exposed joints smooth and touch-up.

E. Do not weld, cut or abrade frames and mesh which have been finished after fabrication and are to be field connected by mechanical means.

F. Field Welding; comply with AWS Code D1.1.

3.3 ADJUSTING AND CLEANING

A. Protect finishes of mesh from damage during construction by use of temporary protective coverings approved by manufacturer. Remove protective covering at project completion. Restore finishes damaged during installation and construction period.

END OF SECTION

05/03/13 PERMIT SET

SECTION 057300

STAINLESS STEEL RAILINGS

PART 1 - GENERAL

1.1 SUMMARY

A. Section Includes: Exterior Stainless steel railings at site locations indicated in drawings.

1.2 SYSTEM REQUIREMENTS

A. Design Requirements:
   1. Fabricator is responsible for designing units, including anchorage to concrete slab and necessary modifications to meet specified requirements and maintain visual design concepts.
   2. Drawings are diagrammatic and are intended to establish basic dimension of units, sight lines, and profiles of units.
   3. Provide concealed fastening wherever possible.

B. Structural Requirements: Provide assemblies which, when installed, comply with the following minimum requirements for structural performance:
   1. Guards: Capable of withstanding following loads applied as indicated.
      a. Concentrated load of 200 pounds applied at any point along the top, in any direction, and have attachment devices and supporting structure to transfer this loading to appropriate structural elements of the building.
      b. Uniform load of 50 PLF applied in any direction at the top and to transfer this load through the supports to the structure.
      c. Concentrated and uniform loads above need not be applied simultaneously.

1.3 SUBMITTALS

A. Shop Drawings: Indicate locations and complete fabrication details, materials, finishes, and installation details.

B. Submit following Informational Submittals: Manufacturer's instructions.

1.4 QUALITY ASSURANCE

A. Fabricator Qualifications: Company specializing in fabricating work specified in this Section with minimum 5 years documented experience.

B. Welder Qualifications: AWS certified within past 12 months for each type of weld required.

1.5 DELIVERY, STORAGE AND HANDLING

A. Deliver, store, and handle products in accordance manufacturer’s instructions.

PART 2 - PRODUCTS

2.1 MATERIALS

A. Stainless Steel:
   1. Pipe: ASTM A312, Grade TP 316.
   2. Tubing: ASTM A554, Grade MT 304.
   3. Castings: ASTM A743, Grade CF-8 or CF-20.
   4. Shapes: ASTM A276, UNS Number S31600.

2.2 GROUT

A. Non-Shrink Grout:
   1. Pre-mixed compound consisting of non-metallic aggregate, cement, water reducing and plasticizing additives.
   2. Minimum strength at 28 days: 5000 psi.
   3. Comply with ASTM C1107.

05/03/13 PERMIT SET

4. Acceptable Products:
   a. Crystex, L&M Construction Chemicals, Omaha, NE.
   b. Masterflow 713, Master Builders, Cleveland, OH.
   c. Euco Rock Anchor Bolt Grout, Euclid Chemical Co., Cleveland, OH.
   d. SikaGrout 212, Sika Corporation, Lyndhurst, NJ.
   e. Five Star Grout, Five Star Products, Fairfield, CT.

B. Fasteners: As recommended by manufacturer for conditions encountered.

2.3 FABRICATION

A. General:
   1. Verify dimensions on site prior to fabrication.
   2. Fabricate to support design loads specified.
   3. Fit and shop assemble in largest practical sizes.
   4. Fabricate materials straight and true, without scratches, scars, creases, buckles, ripples, or chatter marks, free from surface blemishes.

B. Connections:
   1. Stainless Steel Custom Design: Fabricate for connection of members by welding; comply with AWS for recommended practices; grind exposed welds smooth and flush.

C. Brackets, Flanges, Fittings, and Anchors:
   1. Provide brackets, flanges, miscellaneous fittings and anchors for interconnection of railing members as indicated on Drawings.

D. Joints: Mill to tight, hairline fit.

E. Ends: Capped.

F. Bends: Form by prefabricated elbow fittings and radius bends, except where configuration requires bending of railing members.

2.4 FINISHES

A. Stainless Steel: No. 4 brushed finish.

PART 3 - EXECUTION

3.1 EXAMINATION

A. Examine conditions and proceed with work when substrates are ready.

3.2 INSTALLATION

A. Install in accordance with manufacturer's recommendations.

B. Fit exposed connections to form tight, hairline joints.

C. Set work accurately in location, set posts and align to within 1/4 inch in 12 feet.

D. Do not weld, cut or abrade railings which have been finished after fabrication and are to be field connected by mechanical means.

E. Anchoring Posts:
   1. Concrete:
      a. Anchor posts in concrete by means of core drilling holes.
      b. Fill annular space between posts and sleeves solid with non-shrink, non-metallic grout.
      c. Leave anchorage joint exposed; wipe off excess grout and leave flush with adjacent floor.

3.3 ADJUSTING AND CLEANING

A. Protect finishes of railings from damage during construction by use of temporary protective coverings approved by railing manufacturer. Remove protective covering at project completion. Restore finishes damaged during installation and construction period.

END OF SECTION

05/03/13 PERMIT SET

SECTION 058100

EXPANSION JOINT COVER ASSEMBLIES

PART 1 - GENERAL

1.1 SUMMARY

A. Expansion joint assemblies

1.2 RELATED SECTIONS

A. Control joints for unit masonry are specified in Section 04 22 00 - Concrete Unit Masonry.

B. Sealants for sealing of perimeter joints at openings in walls and for joints at abutting materials are specified in Section 07 92 00 – Sealants.

1.3 REFERENCES

A. American Society for Testing and Materials (ASTM):

1. ASTM A240 Specification for Heat-Resisting Chromium and Chromium-Nickel Stainless Steel Plate, Sheet, and Strip for Pressure Vessels
2. ASTM A480 Specification for General Requirements for Flat-Rolled Stainless and Heat-Resisting Steel Plate, Sheet and Strip
3. ASTM B221 Specification for Aluminum and Aluminum-Alloy Extruded Bars, Rods, Wire, Shapes, and Tubes
4. ASTM C509 Specification for Elastomeric Cellular Preformed Gasket and Sealing Material
5. ASTM C834 Specification for Latex Sealants
6. ASTM C920 Specification for Elastomeric Joint Sealants
7. ASTM C1085 Specification for Butyl Rubber-Based Solvent-Release Sealants
8. ASTM F738 Specification for Stainless Steel Metric Bolts, Screws, and Studs

1.4 SUBMITTALS

A. Product Data and Working Drawings: Submit manufacturers' product data of expansion-joint closures, assemblies, seals, and sealants for review. Include installation details.

PART 2 - PRODUCTS

2.1 EXPANSION JOINT ASSEMBLIES

A. Expansion joint closures and seals shall be aluminum extrusions, neoprene rubber seals, and ethylene propylene diene monomer (EPDM) covers of type and size to suit the construction as indicated.

1. Acceptable Manufacturers: Subject to these specifications conditions, acceptable manufacturers shall be D. S. Brown Co.; General Tire Engineered Construction Products; Watson Bowman and Acme Corp. (Wabco); or equal.
2. Molded Elastomeric Hinged Cover System: Watson Bowman and Acme Corp. (Wabco) Wabo-SafetyFlex cover for expansion joint openings; or equal.
3. Functional Seal: Closed cell neoprene synthetic rubber conforming with ASTM C509, medium density. Watson Bowman and Acme Corp. (Wabco) Wabo-InverSeal preformed joint seal; or equal.
4. Fasteners: Fasteners shall be the expansion joint assembly manufacturer’s standard corrosion resistant fasteners.
5. Sealant: Sealant for installation behind aluminum retainer, in rear pocket of aluminum retainer, and at joints, where indicated, shall conform to ASTM C834, C920, or C1085 as appropriate for the construction and exposure conditions, and as recommended by the expansion joint assembly manufacturer.

PART 3 - EXECUTION

05/03/13 PERMIT SET

3.1 PREPERATION

A. Surface Preparation: Supporting joint surfaces shall be prepared as recommended by the manufacturer. Edges of the substrate shall be level and sound.

3.2 INSTALLATION

A. Expansion Joint Assemblies: Install expansion-joint assemblies and engineered floor and wall seals as indicated and in accordance with the approved Working Drawings and the manufacturer's installation instructions and recommendations.

3.3 CLEANING

A. Unused materials, containers, and equipment shall be removed from the work area.

B. Surfaces that are stained, marred or otherwise damaged shall be cleaned and repaired.

END OF SECTION

05/03/13 PERMIT SET

SECTION 061500

WOOD DECKING

PART 1 - GENERAL

1.1 SUMMARY

A. Section Includes:
   1. Hardwood Decking for stairs and seating areas as indicated on Architectural Drawings
   2. Pressure Treated Sleepers and Structural Framing
   3. Stainless Steel fasteners and connectors

1.2 SUBMITTALS

A. Prior to installation, contractor to provide the following information:
   1. Standard printed specification of hardwood and related items to be installed.
   2. Shop Drawings: Indicate details necessary for a complete instillation, including spacing and sizes of connections and members, finishes of members, and other necessary information.
   3. Samples: Submit samples of finishes and colors of materials for approval by Engineer.

B. Upon completion of specified work, contractor to provide closeout submittals as listed below.
   1. Provide a care and maintenance manual for the Owner's use for future maintenance of the installed system.
   2. Warranty: Submit specified warranty

1.3 QUALITY ASSURANCE

A. Installer Qualifications: Selected contractor shall have a minimum five (5) years experience with installations of similar material and design with a record of successful in-service performance.

B. Source Limitations: Obtain all materials and products from one source with resources to provide natural materials and products of consistent quality in appearance and physical properties.

C. Regulatory Requirements: Contractor to ensure installation complies with all applicable building codes.

1.4 DELIVERY, STORAGE, AND HANDLING

A. Deliver, store, and handle products in accordance manufacturer's instructions.
   1. Allow materials to adjust to climate and temperature

B. Protect finish surfaces as necessary to prevent damage.

PART 2 - PRODUCTS

2.1 HARDWOOD DECKING

A. Basis of Design: Ipe Hardwood Decking
   1. Use only wood indicated for outdoor use.
   2. Natural Weathering; wood to remain untreated

2.2 PRESSURE TREATED SLEEPERS AND STRUCTURAL FRAMING

A. Refer to drawings for design intent. Contractor to indicate scope of material within shop drawings.

2.3 STAINLESS STEEL FASTNERS AND CONNECTORS

PART 3 - EXECUTION

3.1 EXAMINATION

A. Examine conditions and proceed with work when substrates are ready.

3.2 INSTALLATION

A. Install in accordance with manufacturer's instructions, details and approved shop drawings.

05/03/13 PERMIT SET

B. Erect true to line, plumb, level, square and in proper planes with other work, free from twists, sags, waves, buckles or other objectionable defects.

C. Provide anchorage to safely resist stresses to which members will normally be subjected.

D. Anchor securely in place allowing for required movement including expansion and contraction.

3.3 CLEANING / PROTECTING

A. Touchup damaged decking at completion of installation.

B. Replace damaged decking that cannot be successfully repaired, as approved by the Engineer, to match adjacent decking, at no cost to the owner.

C. Protect finish floor from construction damage and traffic by covering as approved by manufacturer.

D. Remove protective covering at project completion.

END OF SECTION

05/03/13 PERMIT SET

SECTION 076000

FLASHING AND SHEET METAL

PART 1 - GENERAL

1.1 SUMMARY

A. Section Includes: Sheet metal flashing, counterflashing, and associated trim.

1.2 REFERENCES

A. Reference Standards: Comply with applicable provisions for design, materials, fabrication, and installation of component parts of Sheet Metal and Air Conditioning Contractors National Association (SMACNA), 6th Edition.

1.3 SUBMITTALS

A. Shop Drawings:
   1. Indicate typical layout including dimensions, configuration, locations, interface with adjacent systems, clearances, tolerances, frequency of attachment, and fabrication details.
   2. Submit detail drawings of transitions, intersections, and connections.

1.4 QUALITY ASSURANCE

A. Fabricator's Qualifications: Company specializing in sheet metal flashing work with 3 years documented experience in similar size and type of installations.

B. Certifications: Submit fabricator's certification that products furnished for Project meet or exceed specified requirements.

1.5 DELIVERY, STORAGE AND HANDLING

A. Deliver, store, and handle products in accordance manufacturer's instructions.

B. Stack pre-formed material to prevent twisting, bending, and abrasions, and to provide ventilation.

C. Prevent contact with materials which may cause discoloration or staining.

PART 2 - PRODUCTS

2.1 MATERIALS

A. Galvanized Steel Sheet:
   1. General: Zinc coating, hot dip galvanized, flattened sheets, chemically treated.
   2. Commerical Quality: ASTM A653, G90
   3. Lock-Forming Quality: ASTM A653, G90
   4. Thickness: As indicated on Drawings; 24 gage minimum or as recommended in Architectural Sheet Metal Manual for intended purposes.
   5. Finish: Mill phosphatized where indicated for painting.

2.2 ACCESSORIES

A. Fasteners:
   1. Materials: AISI Series 300 for stainless and galvanized steel; aluminum for aluminum sheets.
   2. Screws and Bolts: Sufficient size and length to sustain imposed stresses.

B. Solder Materials:
   1. Flux: Type as recommended by sheet material manufacturer; not detrimental to base material.
   2. Solder: ASTM B32, 50 percent tin/50 percent lead for galvanized steel.

C. Asphalt Mastic: SSPC-Paint 12, solvent-type asphalt mastic, containing no asbestos fibers, compounded for 15 mil dry film thickness per coat.

05/03/13 PERMIT SET

D. Sealants:
   1. Silicone—General Purpose sealant specified in Section 079200.
   2. Color as selected by engineer from full range of manufacturer's standard colors.

2.3 FABRICATION

A. General:
   1. Shop fabricate components to maximum extent possible to minimize site fabrication.
   2. Fabricate to allow for adjustments in field for proper anchoring and joining.
   3. Form sections true to shape, accurate in size, square, free from distortion and defects.
   4. Fabricate cleats and starter strips of same material as sheet, interlockable with sheet.
   5. Fabricate corners from one piece with minimum 18 inch long legs; solder for rigidity; seal with sealant.
   6. Solder
      a. Solder and seal metal joints except those indicated or required to be expansive type joints.
      b. After soldering, remove flux. Wipe and wash solder joints clean.

B. Seams:
   1. Provide following seam types unless noted or detailed otherwise.
   2. Flat: Overlapped and sealed.

C. Sheet Metal Thickness/Mass:
   1. Flashing: In accordance with SMACNA Chapter 4.

D. Flashing and Counter Flashing:
   1. Fabricate as indicated on Drawings and in accordance with SMACNA Architectural Sheet Metal Manual, Chapter 4.
   2. Hem exposed flashings on underside 1/2 inch; miter and seam corners.
   3. Fabricate vertical faces with bottom edge formed outward 1/4 inch and hemmed to form drip.
   4. Fabricate flashings to allow toe to extend minimum 2 inches over wall surfaces.

PART 3 - EXECUTION

3.1 EXAMINATION

A. Examine conditions and proceed with work when substrates are ready.

3.2 PREPARATION

A. Field measure site conditions prior to fabricating work.

B. Install edge strips and cleats before starting installation.

3.3 INSTALLATION

A. General:
   1. Install metal work in accordance with SMACNA.
   2. Install units plumb, level, square, and free from warp or twist while maintaining dimensional tolerances and alignment with surrounding construction.
   3. Apply asphalt mastic on metal surfaces of units in contact with cementitious materials and dissimilar metals.
   4. Fit flashings tight in place. Make corners square, surfaces true and straight in planes, and lines accurate to profiles.
   5. Miter, lap seam and close corner joints with solder. Seal seams and joints watertight.
   6. Install expansion joints at frequency recommended by SMACNA. Do not fasten seams such that movement is restricted.
   7. Coordinate with installation of roofing system and roof accessories.

B. Flashing
   1. Secure flashings in place using concealed fasteners.
   2. Use exposed fasteners only in locations approved by engineer.

3.4 CLEANING

A. Upon completion of each area of soldering, carefully remove flux and other residue from surfaces. Neutralize acid flux by washing with washing soda solution, and then flushing clear water rinse. Use special care to neutralize and clean crevices.

END OF SECTION

05/03/13 PERMIT SET

SECTION 079200

JOINT SEALANTS

PART 1 - GENERAL

1.1 SUMMARY

A. Related Sections:
   1. Section 076000 - Flashing and Sheet Metal.

1.2 DEFINITIONS

A. Use definitions in ASTM C717.

B. Non-Bleeding: Not capable of exuding liquid chemical components of sealant.

C. Non-Staining: Not capable of discoloring joint substrate.

D. One-Stage Sealing: Weatherproof sealing of joints at the exterior face of the wall section; sealant acts as both water and air seal.

E. Primary Seal: Deflector seal in two-stage sealing.

F. Sealant System: Sealant, sealant backing, and primer intended for use in particular condition.

1.3 SUBMITTALS

A. Product Data:
   1. Submit product data and product specifications for each product.
   2. Include data to indicate chemical characteristics, performance criteria, limitations, substrate preparation, installation requirements, and curing requirements.
   3. Include information for accessories and other required components.
   4. Include color charts indicating manufacturer’s full color range available of each sealant type for engineer’s initial selection.

B. Samples: Submit four 1/4 inch diameter by 2 inch long samples illustrating sealant colors for each product exposed to view.

C. Submit following Informational Submittals:
   1. Test Reports: Submit written results of testing specified as part of Source and Field Quality Control articles.
   2. Certifications specified in Quality Assurance article.
   3. Qualification Data: Manufacturer's and installer's qualification data.
   4. Manufacturer's instructions. Include requirements for surface preparation, priming, joint size ratios, adhesion testing, and perimeter conditions requiring special attention.
   5. Manufacturer's field reports.

D. Closeout Submittals:
   1. Warranty: Submit specified warranty.

1.4 QUALITY ASSURANCE

A. Single Source Responsibility:
   1. Provide products for each sealant system from one manufacturer for entire Project, unless otherwise acceptable to engineer.
   2. Provide products from a single manufacturer to ensure material compatibility where different sealant materials come in direct contact with each other.
   3. Provide each sealant system as complete unit, including accessory items necessary for proper function.

B. Manufacturer Qualifications: Company specializing in manufacturing products specified in this Section with minimum 5 years experience.

C. Applicator Qualifications: Acceptable to manufacturer, specializing in applying sealants, with experience on at least 5 projects of similar nature in past 5 years.

D. Certifications:

05/03/13 PERMIT SET

1. Manufacturer's Certification that Products:
   a. Furnished for Project meet or exceed specified requirements.
   b. Assembled for each joint are compatible with each other and with joint substrates under conditions of service and application.
   c. Are suitable for the indicated use.
2. Manufacturer's certification that sealants, primers, and cleaners, comply with local regulations controlling the use of volatile organic compounds.
3. Contractor's and installer's certification that products are installed in accordance with Contract Documents, based on inspection and testing specified as part of Field Quality Control.

1.5 PRE-INSTALLATION CONFERENCE

A. Conduct pre-installation conference.

B. Convene pre-installation conference 3 weeks prior to commencing work of this Section.

C. Conference Purpose and Agenda:
1. Visit Project site to analyze site conditions, and inspect surfaces and joints to be sealed in order that recommendations may be made should adverse conditions exist.
2. Review mock-up and field sample.
3. Discuss following items:
   a. Substrate conditions.
   b. Preparatory work.
   c. Weather conditions under which work will be done.
   d. Anticipated frequency and extent of joint movement.
   e. Joint design.
   f. Sealant installation procedures.

1.6 DELIVERY, STORAGE AND HANDLING

A. Deliver, store, and handle products in accordance manufacturer's instructions.

B. Deliver materials to site in unopened containers and bundles with labels indicating:
1. Manufacturer's name.
2. Product name and designation.
3. Color.
4. Expiration period for use.
5. Working life.
6. Curing time.
7. Mixing instructions for multi-component materials.

C. Storage and Protection:
1. Store products within manufacturer's required temperature and humidity ranges.
2. Prior to use, condition products within manufacturer's required temperature range, humidity range, and time period.

1.7 PROJECT CONDITIONS

A. Environmental Requirements:
1. Apply sealant when the following are within manufacturer's limits during and for 24 hours after sealant installation:
2. Ambient and surface temperatures.
3. Relative humidity.
4. Do not apply sealants to wet or frozen surfaces.
5. Comply with manufacturer's requirements regarding application of sealants in vicinity of curing sealants of a different material.

1.8 WARRANTY

A. Warrant installed products to be free from defects in material, labor, or installation techniques for 20 years on silicones used at exterior building envelope, 2 years at sealants used at interior locations.

B. Include coverage for installed sealants and accessories which:
   1. Fail to achieve air tight seal.
   2. Fail to achieve watertight seal.
   3. Exhibit loss of adhesion.
   4. Exhibit loss of cohesion.
   5. Do not cure.

PART 2 - PRODUCTS

2.1 MATERIALS

A. Acrylic Latex (Designation AL):
   1. Description:
      a. ASTM C834.
      b. Non-sag; non-staining; non-bleeding.
      c. Joint movement range without cohesive/adhesive failure: Plus 7.5 percent to minus 7.5 percent of joint width.
      d. Color: As selected by engineer from manufacturer's full color range.
   2. Acceptable Products:
      a. AC-20, Pecora Corporation.
      b. Sonolac, Sonneborn Building Products.
      c. Acrylic Latex Tremflex 834, Tremco, Inc.

B. Silicone—General Purpose (Designation S-GP):
   1. Description:
      a. ASTM C920:
         1) Type: S
         2) Grade: NS
         3) Class: 25
         4) Uses: NT, M, G, A, O
      b. Single component, neutral curing, non-staining, non-bleeding silicone sealant.
      c. Medium modulus silicone for metal to metal and metal to adjacent substrates; Low modulus silicone for all other locations.
      d. Joint movement range without cohesive/adhesive failure: Plus 50 percent to minus 50 percent of joint width.
      e. Color: Selected by engineer from manufacturer's full color range.
      f. Acceptable Medium Modulus Products:
         1) 795, Dow Corning.
         2) Silpruf, General Electric.
         3) Spectrem 2, Tremco.
      g. Acceptable Low Modulus
         1) 790, Dow Corning.
         2) 890, Pecora.
         3) Spectrem 1, Tremco.

C. Silicone—Sanitary (Designation S-S):
   1. Description:
      a. ASTM C920:
         1) Type: S
         2) Grade: NS
         3) Class: 25
         4) Uses: NT, M, G, A, O
      b. Neutral or acid curing, non-staining, non-bleeding, fungicide-containing.
      c. Color: Selected by engineer from manufacturer's full color range.
   2. Acceptable Products:
      a. 786 Mildew-Resistant Silicone Sealant, The Dow Chemical Company.
      b. Sanitary 1700, General Electric Silicones.
      c. Tremsil 200 Sanitary, Tremco

D. Urethane—Traffic-Bearing (Designation U-TB): ASTM C920, Type M, Grade P:

1. Sealant containing mercury not allowed.
2. Class: 25. Joint movement range without cohesive/adhesive failure: Plus 25 percent to minus 25 percent of joint width.
3. Uses: T, M, O
4. Chemical curing, non-staining, non-bleeding.
5. Shore A Hardness: 40 minimum, when tested in accordance with ASTM C661.
6. Color: As selected by engineer from complete range available from manufacturer.
7. Acceptable Products.
   a. NR-200, Pecora.
   b. Vulkem 245, Tremco.
   c. Sikaflex 2c/SL, Sika.
   d. SL 2 Sealant, Sonneborn Division of BASF Building Systems, Shakopee, MN.
   e. THC-900, Tremco.

2.2 ACCESSORIES

A. Joint Cleaner:
1. Chemical cleaners required by sealant manufacturer for substrates encountered, compatible with sealant backing bond breaker materials.
2. Free of substances capable of staining, corroding, or harming:
   a. Joint substrates.
   b. Adjacent nonporous surfaces.
   c. Sealant.
   d. Sealant backing.
3. Formulated to promote optimum adhesion of sealants to joint substrates.

B. Primer:
1. Dyed coating material required by sealant manufacturer for enhancing sealant adhesion to joint substrates.
2. Non-staining to joint substrate beyond the substrate surface.
3. Required for use unless not required by results of:
   a. "Manufacturer's sealant-substrate compatibility and adhesion test" described under Source Quality Control.
   b. "Field hand-pull adhesion test" under Field Quality Control.

C. Sealant Backing Bond Breaker Rod:
1. Non-staining material.
2. Compatible and non-adhering to sealant when tested in accordance with ASTM C1087.
3. Compatible with sealant, joint substrates, primers, and other sealant backing bond breakers.
4. Sealant manufacturer approved.
5. Sized and shaped to provide optimum performance and backing to sealant.
6. Preformed, compressible, resilient, non-staining, non-outgassing, non-waxing, non-extruding, cylinder-shaped plastic foam rods compliant with ASTM D1056.
7. Open Cell Polyurethane: Use not permitted unless required by sealant manufacturer.
8. Closed Cell Polyethylene:
   a. Non-absorbent to liquid water.
   b. Use in wall and ceiling joints unless otherwise required by sealant manufacturer.
9. Reticulated Polymeric: Sof®-Rod, Nomaco, Inc.
10. Unless otherwise required by sealant manufacturer, oversize rod to be larger than joint width by following minimum amounts:
    a. Open Cell Polyethylene: 50 percent.
    b. Closed Cell Polyethylene: 33 percent.
    c. Reticulated Polymeric: 25 percent.

D. Elastomeric Tubing Joint Filler:
1. Neoprene, butyl, EPDM, or silicone tubing compliant with ASTM D1056.
2. Shore A hardness of 70.
3. Compatible with sealant, joint substrates, primers, and other sealant backing bond breakers.
4. Use in pavement joints, unless otherwise required by sealant manufacturer.
5. Use sealant backing bond breaker tape to separate sealant from rod.

6. Unless otherwise required by sealant manufacturer, oversize rod to be larger than joint width by 25 percent the following minimum amounts:

E. Sealant Backing Bond Breaker Tape:
1. Pressure sensitive polyethylene tape or tetrafluorethylene self-adhesive tape required by sealant manufacturer to suit application.
2. Minimum Thickness of 11 mils.

F. Masking Tape: Non-staining, non-absorbent material compatible with sealants and surfaces adjacent to joints.

G. Tooling Liquids: Non-staining material approved by manufacturer to reduce adhesion of sealant to joint finishing tools.

H. Adhesives shall meet or exceed the VOC and chemical component limits of Cal-GREEN Table 5.504.4.1 Adhesive VOC Limit requirements.

I. Sealants shall meet or exceed the VOC and chemical component limits of Cal-GREEN Table 5.504.4.2 Sealant VOC Limit requirements.

2.3 MIXES

A. Comply with manufacturer's instructions.

B. Mix thoroughly with mechanical mixer without mixing air into sealants.

C. Continue mixing until sealant is uniform in color and free from streaks of unmixed materials.

PART 3 - EXECUTION

3.1 EXAMINATION

A. Examine conditions and proceed with work when substrates are ready.

B. Ensure that concrete and masonry have cured minimum of 28 days.

C. Verify that sealant backing is compatible with sealant.

D. Verify that substrate surface:
1. Is within manufacturer's moisture content range.
2. Complies with manufacturer's cleanliness and surface preparation requirements.

E. Joint Width:
1. Verify joints are greater than minimum widths required by manufacturer.
2. If joints are narrower than minimum required widths, widen narrow joints to indicated width.
3. Do not place sealant in joints narrower than manufacturer's required minimum.

3.2 PREPARATION

A. Prepare, clean, and prime joints in accordance with manufacturer's instructions.

B. Remove loose materials and matter which might impair adhesion of primer and sealant to substrate.

C. Remove form release agents, laitance, and chemical retarders, which might impair adhesion of primer and sealant to concrete and masonry surfaces.

D. Comply with ASTM C1193.

E. Protect elements adjoining and surrounding work of this Section from damage and disfiguration.

F. Priming: Prime joint substrates as recommended by manufacturer for actual project conditions. unless priming is not required by:
1. Apply primer to substrate areas where joint sealant is to adhere.
2. Comply with manufacturer's sequencing requirements for joint priming and sealant backing bond breaker rod installation to assure required primer application coverage and rate without placement of primer on backer rod surface to be in contact with sealant and avoid three-sided sealant adhesion.
3. Do not allow spillage and migration of primer onto surfaces not to receive primer.
4. Install sealant to primed substrates after primer has cured.

G. Masking Tape:

1. Use masking tape to prevent contact of primer and sealant with adjoining surfaces that would be permanently stained or damaged by:
   a. Contact with primer and sealant.
   b. Cleaning methods used to remove primer and sealant smears.
2. Place continuously along joint edges.
3. Apply masking tape so it does not shift in position after placement.

3.3 APPLICATION

A. General:
1. Comply with manufacturer's requirements and instructions.
2. Comply with results and recommendations from:
   a. "Manufacturer's compatibility and adhesion test" described in Source Quality Control Article.
   b. "Field hand-pull adhesion test" described in Field Quality Control article.
3. Provide compatible sealant system between dissimilar assemblies and adjacent construction.
4. Seal locations necessary to create and secure continuous air, water, and vapor enclosure even though Contract Documents may not indicate all locations; do not seal weep holes.
5. Seal to prevent migration of water, vapor, and air through joints.
6. Comply with manufacturer's required application temperature and relative humidity ranges. Consult manufacturer when sealant cannot be applied within these ranges.

B. Sealant Backing Bond Breaker:
1. Measure joint dimensions and size materials to achieve manufacturer-required width-to-depth ratios.
2. Install to achieve sealant depth and sealant contact depth no greater than distance required by manufacturer for sealant material, joint width, and joint movement range.
3. Install using blunt instrument to avoid puncturing.
4. Do not:
   a. Twist, puncture, and tear material.
   b. Leave gaps between ends of material pieces.
   c. Stretch or compress material along its length.
   d. Stretch or compress tape material along its width.
5. Install to provide optimum joint profile and in manner to provide not less than 1/4 inch sealant depth when tooled.
6. Install tape where insufficient joint depth makes use of rod not possible. Match tape width to joint width to prevent three-side adhesion. Do not wrap tape onto sides of the joint.
7. Replace backing bond breaker materials which have become wet with dry materials prior to sealant application.

C. Sealant:
1. Install sealants at same time as installation of backing bond breaker materials.
2. Do not exceed manufacturer's required:
   a. Material shelf life.
   b. Material working life.
   c. Installation time after mixing.
3. Comply with manufacturer's requirements for applying different sealant materials in direct contact with each other.
4. Use gun nozzle size to suit joint size and sealant material.
5. Install sealant with pressure-operated devices to form uniform continuous bead.
6. Use sufficient pressure to fill voids and joints full.
7. Install to adhere to both sides of joint.
8. Install to not adhere to back of joint; provide sealant backing.
9. Install sealant free of air pockets and embedded matter.
10. Recess sealant 1/8 inch from surface of pavements and horizontal surfaces.

D. Sealant Tooling:
1. Comply with manufacturer's tooling method requirements.
2. Tool sealant within manufacturer's tooling time limits.

3. Tooling liquids:
   a. Comply with manufacturer's requirements regarding use.
   b. Do not use when not permitted by manufacturer.
   c. Do not allow tooling liquids to come in contact with surfaces receiving sealant.
4. Produce smooth exposed surface.
5. Tool Sealant to be Free of:
   a. Air pockets and voids.
   b. Embedded impurities.
   c. Surface ridges, sags, and indentations.
6. Achieve full sealant contact and adhesion with substrate.
7. Form a concave tooled joint shape indicated in Section A of Figure 5 of ASTM C1193, unless otherwise indicated.
8. Remove excess sealant from surfaces adjacent to joint.
9. Allow acrylic latex sealant to achieve firm skin before paint is applied.

E. Masking Tape:
1. Remove immediately after tooling sealant and before sealant skin forms.
2. Remove without disturbing sealant.

3.4 FIELD QUALITY CONTROL

A. Field Hand-Pull Adhesion Test:
1. At field sample:
   a. Before sealant installation is commenced, test materials for indications of staining and poor adhesion to substrate.
   b. Perform after sealants have fully cured.
   c. Perform under observation of manufacturer's technical representative.
2. Subsequent to commencement of sealant installation:
   a. Perform under observation of manufacturer's technical representative.
   b. Perform minimum of 4 times prior to completion of sealant installation.
   c. Schedule tests at evenly-spaced intervals during sealant installation at discretion of sealant manufacturer.
3. Procedure:
   a. Make knife cut through sealant from side to side of joint.
   b. At joint's sides, make two cuts approximately 2 inches long meeting cut made across joint width.
   c. Place a mark on cut portion of sealant 1 inch from cut across joint width.
   d. Use fingers to grasp 2 inch piece of sealant firmly between mark and cut across joint width.
   e. Pull cut portion outward at an angle of 90 degrees from sealant face.
   f. Use a ruler to measure distance that sealant is pulled.
   g. Pull uncut sealant out of joint to distance recommended by manufacturer for testing adhesive capability, but not less than a distance equal to maximum movement capability in extension.
   h. Hold extended sealant for a minimum of 10 seconds.
   i. If adhesion is proper, sealant should tear cohesively in itself or be difficult to adhesively remove from joint substrate.
4. Summarize test results in test report. Indicate:
   a. Sealants tested.
   b. Joint substrates.
   c. Cohesive failures.
   d. Adhesive failures.
   e. Pull distance used.
   f. Actions to correct failures and non-complying conditions.
5. In absence of noncomplying conditions, sealants which do not indicate adhesive failure from testing will be considered satisfactory.
6. Replace sealant removed from test locations by applying sealant in accordance with manufacturer's requirements for applying sealant to previously sealed joints.

3.5 CLEANING

A. Clean excess sealants and sealant smears from adjacent surfaces as application progresses; comply with sealant manufacturer's requirements and manufacturer of surface in which joints occur.

B. Repair or replace defaced or disfigured finishes caused by work of this Section and replace where installation techniques result in unsatisfactory joining of materials and unsightly conditions.

3.6 PROTECTION

A. Protect sealants from contamination until cured.

B. Protect sealant joints in horizontal surfaces from foot and vehicular traffic until cured.

3.7 SCHEDULE

A. Items Not to be Sealed:
   1. Joints, perimeter, and penetrations in sound-rated assemblies. Use acoustical sealant specified with sound-rated assembly in Section 092900.
   2. Weep holes.

B. Sealant Schedule:
   1. Exterior Locations:
      a. Wall Joints: Designation S-GP; use primer where required by manufacturer.
      b. Joints and Perimeter of Penetrations in Horizontal Pedestrian and Vehicle Traffic Surfaces: Designation U-TB.
   2. Interior Joints:
      a. Wall and Ceiling Joints subject to Movement: Designation S-GP.
      b. Wall and Ceiling Joints not subject to Movement: Designation AL.
      c. Interior side of exterior openings: S-GP.
      d. Floor Joints, including tile: Designation U-TB.
      e. Interior Sanitary Joints; Joints Between Plumbing Fixtures and Adjoining Floor, Wall, and Ceiling Surfaces; Joints Between Back Splashes and Wall Substrates: Designation S-S.

END OF SECTION

05/03/13 PERMIT SET

SECTION 081100

METAL DOORS AND FRAMES

PART 1 - GENERAL

1.1 SUMMARY

A. Section Includes: Doors and frames of hollow metal construction.

B. Related Sections:
   1. Section 087100 - Door Hardware.

1.2 SYSTEM DESCRIPTION

A. General:
   1. Meet or exceed ANSI/SDI 250.8 and HMMA 861, and more stringent requirements specified in this Section.
   2. Hardware Preparation:
      a. Comply with ANSI A115 Series and SDI 107, except for hardware locations.
      b. Comply with Section 087100 for hardware locations.
      c. Mortise, reinforce, drill, and tap frames and doors at factory to receive mortised and concealed hardware in accordance with templates and approved hardware schedules.
      d. Reinforce frames and doors for surface mounted hardware; drilling and tapping will be in field at time of hardware application.
      e. Comply with ANSI/SDI A250.8 and SDI 107 for thickness of hardware reinforcing.

1.3 SUBMITTALS

A. Product Data:
   1. Submit for each type of door and frame specified, including details of construction, materials, dimensions, hardware preparation, core, profiles, and finishes.
   2. Include proof that doors and frames are fabricated in accordance with SDI requirements.

B. Shop Drawings:
   1. Submit schedule indicating opening identification number, door and frame types, sheet metal thickness, dimensions, swing, label, hardware requirements, and undercuts when applicable. Use same identification numbers for openings as shown by Contract Drawings.
   2. Include elevations and details indicating door and frame types, profiles, conditions at openings, methods of anchoring, hardware locations, reinforcements for hardware, core construction, and provisions for vision panels and louvers when applicable.
   3. Clearly identify work that cannot be permanently factory assembled before shipment. Indicate locations of field splice joints and include associated details to ensure proper assembly at project site.

1.4 DELIVERY, STORAGE, AND HANDLING

A. Deliver, store, and handle products in accordance manufacturer's instructions.

B. Store in protected dry area under cover.

C. Place units on wood skids and store in manner that will prevent corrosion and damage.

D. Avoid use of non-vented plastic or canvas coverings which could trap moisture.

E. Store assemblies upright, do not stack flat. Provide space between stacked assemblies to promote air circulation.

PART 2 - PRODUCTS

2.1 MANUFACTURERS

A. Acceptable Manufacturers: Members of Steel Door Institute (SDI) or Hollow Metal Manufacturer's Association (HMMA).
   1. Amweld.
   2. Ceco.

3. Curries.
4. Pioneer.
5. Republic.
6. Steelcraft.

2.2 MATERIALS

A. Maximize use of recycled steel where possible.

B. Cold-Rolled Steel: ASTM A1008, commercial quality, Class 1, stretcher-leveled, matte finish.

C. Hot-Rolled Steel: ASTM A1011, commercial quality, pickled, and oiled.

D. Galvanized / Galvannealed Steel (Exterior and exterior atmosphere Locations):
   1. Sheet: ASTM A653, A60 or G60 coating designation, zinc coated by hot-dip process, commercial quality, stretcher-leveled, mill phosphatized. WCGS not permitted.
   2. Anchors and Accessories: ASTM A879, minimum Class B coating, zinc coated by electro-deposition, commercial quality, mill phosphatized.

E. Anchor Bolts, Fasteners, and Screws: Manufacturer's standard type, except cadmium or zinc plated finish. Stainless steel also acceptable.

F. Primer: Manufacturer's standard rust inhibitive primer, air-dried or baked, compatible with finish painting specified in Section 099000.

2.3 FABRICATION

A. General:
   1. Except where specified or noted otherwise, fabricate frames, door faces and edges using cold-rolled steel. Concealed stiffeners, reinforcing, and other components may be cold-rolled or hot-rolled steel at fabricator's option.
   2. Fabricate frames, doors and related components using galvanized/galvannealed steel where assemblies have exposure to exterior atmosphere.
   3. Fabricate sheet metal work neat in appearance and free from defects, warps, or buckles.
   4. Accurately form metal to required sizes and profiles.
   5. Grind and dress exposed welds smooth and flush with adjacent surfaces.
   6. Remove tool marks and surface imperfections by dressing, filling, and sanding smooth. Do not use metallic filler to conceal manufacturing defects.

B. Edge Clearances:
   1. Between doors and frames at head and jambs: 1/8 inch.
   2. Between meeting stiles at pairs of doors: 1/8 inch.
   3. Between Bottom Edge of Door and Finish Floor at Non-Label Assemblies: In accordance with HMMA 861, ANSI/SDI A250.8 except where larger undercuts are scheduled. Finish floor is defined as top surface of substrate. Where carpet or other applied surface materials are placed over floor substrate and greater than 1/2 inch thickness, provide 1/4 inch clearance.
   4. Between Bottom Edge of Door and Threshold: 1/4 inch.

2.4 FABRICATION - FRAMES

A. General Requirements:
   1. Provide frames based on door grade and model in accordance with ANSI/SDI A250.8 and HMMA 820.
   2. Welded construction required; knocked-down not acceptable.
   3. Fully face weld corners, including stops. Grind weld smooth with adjacent surfaces.
   4. Fabricate exterior assemblies of 14 gage or 0.067 inch thick steel.
   5. Fabricate interior assemblies of 16 gage or 0.053 inch thick steel for door openings 4'-0" or less in width, 14 gage or 0.067 inch thick steel for door openings over 4'-0" in width.
   6. Welded construction required; knocked-down not acceptable. Weld joints smooth, full length of joint.
   7. Corners of mitered design; stops coped and butted, or mitered.
   8. Accurately cope joints of mullions, rails, and other similar tubular members; reinforce joints with concealed clips or sleeves.

9. Closed or tubular members may be fabricated of two pieces if interlocked at base of stops; visible seams or joints are not acceptable.

B. Guard Box:
1. Closed box design, 26 gage or 0.016 inch thick minimum, welded to frame.
2. Required at mortise hardware cutouts for assemblies installed within masonry walls or where assemblies will have frames grouted with mortar or similar materials at time of installation.

C. Spreader: Manufacturer's standard temporary channel or angles tack welded at bottom of jamb members.

D. Floor Anchor Clips:
1. Provide at each jamb and mullions which extend to floor.
2. In areas where concrete topping or other similar construction occurs, provide adjustable design to permit securing to depressed subfloor construction. In lieu of adjustable design, frames may extend to subfloor.

E. Jamb Anchors: Comply with SDI-111 and HMMA 820.
1. Metal Stud Wall Systems: Steel clips welded to frame, type or design compatible with stud system. Locate at top of frame, 12 inch from top, and 24 inch centers maximum intermittently, minimum 4 per jamb.
2. Previously Placed Concrete, Masonry, or Structural Steel: Tension plate and spacer design, welded to frame at approximately 24 inch centers, minimum 3 per jamb. Frames drilled and countersunk for 1/4 inch flathead anchor bolts, set below frame surface.

F. Silencers:
1. Drill or Punch Frames for Silencers. Coordinate hole size with silencers specified in Section 087100.
2. Single Interior Doors: 3 at strike jamb.
3. Pair of Interior Doors: 2 at header.
4. Weatherstripped doors: None required.

2.5 FABRICATION - DOORS

A. Flush Doors:
1. Interior Doors: ANSI/SDI Level 2 and Physical Performance Level B, Heavy Duty, Model 1 (1-3/4 inch thick, 18 gage or 0.042 inch thick face sheets, Full Flush Design).
2. Exterior Doors: ANSI/SDI Level 3 and Physical Performance Level A, Extra Heavy Duty, Model 1, 1-3/4 inch thick; 16 gage or 0.053 inch thick face sheets.
3. Option: Custom doors complying with NAAMM Standard HMMA 861 "Type A" may be used in lieu of standard doors constructed in accordance with SDI standards.
4. Core:
   a. Interior: Resin impregnated kraft paper honeycomb.
   b. Exterior: Manufacturer’s standard insulated core.
5. Face sheets broken to form and meet in joint on stile edges weld and grind smooth joints on stile edges.
6. Vertical edges continuously reinforced from top to bottom with steel channels or flat bars placed immediately inside of face sheets.
7. Reinforce top and bottom edge full width of door with steel channel not less than 16 gage or 0.053 inch thick.
8. Fabricate exterior doors with top edge closed flush and fabricate bottom edge with flush closure where required for attachment of weatherstripping. Provide openings in bottom closure of exterior doors to permit escape of entrapped moisture.
9. Provide insulating material in void spaces for sound deadening in assemblies utilizing internal core of steel stiffeners.
10. Fill face welds and surface depressions with metallic paste filler or body putty, grind smooth and flush to unblemished finish appearance.
11. Bevel lock or latch edge 1/8 inch in 2 inches at single doors and at meeting stiles at pairs of doors.

B. Glazing Beads:

1. Minimum 18 gage or 0.042 inch thick steel, screw on type, corners butted or mitered, welded to door assembly on security side, removable on opposite side.
2. Factory install and secure loose bead with countersunk oval head screws spaced 8 inch centers maximum and within 2 inches of ends.

C. Astragals:
1. Full height overlapping design, applied on in-active leaf at pairs of interior label doors as necessary to meet label requirements, minimum 20 gage or 0.032 inch thick steel.
2. Full height overlapping design at pairs of exterior doors, welded on active leaf, 1-3/4 inch by 12 gage or 0.093 inch thick steel.

2.6 FINISHES

A. Ferrous and Galvanized Steel Assemblies:
1. Clean surfaces free of mil scale, rust, oil, grease, dirt, and other foreign materials.
2. Phosphatize or chemically treat surfaces before application of prime coat finish.
3. Touch-up areas where abrasions and welding have destroyed zinc coating with zinc-rich paint before application of prime coat finish.
4. Prime Coat: Manufacturer’s standard rust inhibitive primer to produce smooth and uniform coat.

PART 3 - EXECUTION

3.1 EXAMINATION

A. Examine conditions and proceed with work when substrates are ready.

3.2 INSTALLATION

A. Install hollow metal assemblies in accordance with SDI 105 and HMMA 840.

B. Set frames plumb, level, in true alignment, securely fastened to floor with expansion shields and bolts, and fastened to adjoining walls with specified jamb anchors. Remove temporary spreaders and braces.

C. Fill face of countersunk flathead frame anchors with metallic paste filler; grind smooth and flush with frame surface.

D. Install doors accurately in frames maintaining specified clearances. Install hardware in accordance with manufacturer's written instructions and associated templates. Refer to Section 087100 for hardware installation requirements.

3.3 ADJUSTMENTS

A. After installation of hardware, test and adjust doors for smooth operation.

END OF SECTION

SECTION 087100

DOOR HARDWARE

PART 1 - GENERAL

1.1 RELATED DOCUMENTS

A. Drawings and general provisions of Contract, including General and Supplementary Conditions of Division 1 Specification Sections, apply to this Section.

1.2 SUMMARY

A. This Section includes items known commercially as finish or door hardware that are required for swing, sliding, and folding doors, except special types of unique hardware specified in the same sections as the doors and door frames on which they are installed.

B. This Section includes the following, but is not necessarily limited to:
   1. Door Hardware, including electric hardware.
   2. Thresholds, gasketing and weather-stripping.
   3. Door silencers or mutes.

C. Related Sections: The following sections are noted as containing requirements that relate to this Section, but may not be limited to this listing.
   1. Division 8: Section – Metal Doors and Frames.

1.3 REFERENCES (Use date of standard in effect as of Bid date.)

A. 2010 California Building Code, CCR, Title 24.

B. BHMA - Builders' Hardware Manufacturers Association.

C. DHI - Door and Hardware Institute.

D. NFPA - National Fire Protection Association.
   1. NFPA 80 - Fire Doors and Other Opening Protectives
   2. NFPA 105 - Smoke and Draft Control Door Assemblies

E. UL - Underwriters Laboratories.
   1. UL 10C - Fire Tests of Door Assemblies
   2. UL 305 - Panic Hardware

F. WHI - Warnock Hersey Incorporated

G. SDI - Steel Door Institute

1.4 SUBMITTALS & SUBSTITUTIONS

A. General: Submit in accordance with Conditions of the Contract and Division 1 Specification sections.

B. Submit product data (catalog cuts) including manufacturers' technical product information for each item of door hardware, installation instructions, maintenance of operating parts and finish, and other information necessary to show compliance with requirements.

C. Submit six (6) copies of schedule organized vertically into “Hardware Sets” with index of doors and headings, indicating complete designations of every item required for each door or opening. Include following information:
   1. Include a Cover Sheet with;
      a. Job Name, location, telephone number.
      b. Engineer’s name, location and telephone number.
      c. Contractors name, location, telephone number and job number.
      d. Suppliers name, location, telephone number and job number.

05/03/13 PERMIT SET

e. Hardware consultant's name, location and telephone number.

2. Job Index information included;
   a. Numerical door number index including; door number, hardware heading number and page number.
   b. Complete keying information (referred to DHI hand-book "Keying Systems and Nomenclature"). Provision should be made in the schedule to provide keying information when available; if it is not available at the time the preliminary schedule is submitted.
   c. Manufacturers' names and abbreviations for all materials.
   d. Explanation of abbreviations, symbols, and codes used in the schedule.
   e. Mounting locations for hardware.
   f. Clarification statements or questions.
   g. Catalog cuts and manufacturer's technical data and instructions.
3. Vertical schedule format sample:

Heading Number 1 (Hardware group or set number – HW -1)						
			(a) 1 Single Door #1 - Exterior from Corridor 101		(b)90°	(c) RH
				(d) 3' 0"x7' 0" x 1-3/4" x (e) 20 Minute (f) WD x HM		
(g) 1	(h)	(i) ea		(j) Hinges - (k) 5BB1HW 4.5 x 4.5 NRP (l) ½ TMS	(m) 626	(n) IVE
2	6AA	1 ea		Lockset - ND50PD x RHO x RH x 10-025 x JTMS	626	SCH

(a) - Single or pair with opening number and location. (b) - Degree of opening (c) - Hand of door(s) (d) - Door and frame dimensions and door thickness. (e) - Label requirements if any. (f) - Door by frame material. (g) - (Optional) Hardware item line #. (h) - Keyset Symbol. (i) - Quantity. (j) - Product description. (k) - Product Number. (l) - Fastenings and other pertinent information. (m) - Hardware finish codes per ANSI A156.18. (n) - Manufacture abbreviation.

D. Substitution requests must be made prior to bid date and require approval by engineer and/or owner. Include product data and indicate benefit to the project. Furnish samples of any proposed substitution.

E. Keying Schedule: Submit separate detailed schedule indicating clearly how the Owner's final instructions on keying of locks has been fulfilled.

F. Templates for doors, frames, and other work specified to be factory prepared for the installation of door hardware. Check shop drawings of other work to confirm that adequate provisions are made for locating and installing door hardware to comply with indicated requirements.

G. Furnish as-built/as-installed schedule with close-out documents, including keying schedule and transcript, wiring/riser diagrams, manufacturers' installation and adjustment and maintenance information.

1.5 QUALITY ASSURANCE

A. Obtain each type of hardware (latch and lock sets, hinges, closers, exit devices, etc.) from a single manufacturer.

B. Supplier Qualifications: A recognized architectural door hardware supplier, with warehousing facilities in the project's vicinity, that has a record of successful in-service performance for supplying door hardware similar in quantity, type, and quality to that indicated for this project and that employs an experienced architectural hardware consultant (AHC) who is available to Owner, Engineer, and Contractor, at reasonable times during the course of the Work, for consultation.
   1. Responsible for detailing, scheduling and ordering of finish hardware.
   2. Meet with Owner to finalize keying requirements and to obtain final instructions in writing.

05/03/13 PERMIT SET

3. Stock parts for products supplied and are capable of repairing and replacing hardware items found defective within warranty periods.

C. Hardware Installer: Company specializing in the installation of commercial door hardware with five years documented experience.

1.6 DELIVERY, STORAGE AND HANDLING

A. Coordinate delivery of packaged hardware items to the appropriate locations (shop or field) for installation.

B. Hardware items shall be individually packaged in manufacturers' original containers, complete with proper fasteners. Clearly mark packages on outside to indicate contents and locations in hardware schedule and in work.

C. Provide locked storage area for hardware, protect from moisture, sunlight, paint, chemicals, etc.

D. Inventory door hardware jointly with representatives of hardware supplier and hardware installer until each is satisfied that count is correct.

1.7 WARRANTY

A. Provide warranties of respective manufacturers' regular terms of sale from day of final acceptance as follows:
1. Locksets: Seven (7) years.
2. Electronic Locks: One (1) year.
3. Closers: Ten (10) years, except electronic closers shall be two (2) years.
4. Exit devices: Three (3) years.
5. All other hardware: Two (2) years.

1.8 MAINTENANCE

A. Maintenance Tools and Instructions: Furnish a complete set of specialized tools and maintenance instructions as needed for Owner's continued adjustment, maintenance, and removal and replacement of door hardware.

1.9 PRE-INSTALLATION CONFERENCE

A. Convene a pre-installation conference at least one week prior to beginning work of this section.

B. Attendance: Engineer, Construction Manager, Contractor, Security Contractor, Hardware Supplier, Installer, and Project Inspector.

C. Agenda: Review hardware schedule, products, installation procedures and coordination required with related work.

PART 2 - PRODUCTS

2.1 MANUFACTURERS

	Item	Manufacturer	Acceptable Substitutes
A.	Hinges	Ives	Hager, Stanley, McKinney
B.	Locks, Latches & Cylinders	Schlage	Or Approved Equal
C.	Exit Devices	Von Duprin	Or Approved Equal
D.	Closers	LCN	Or Approved Equal
E.	Push, Pulls & Protection Plates	Ives	Trimco, BBW, DCI
F.	Flush Bolts	Ives	Trimco, BBW, DCI
G.	Dust Proof Strikes	Ives	Trimco, BBW, DCI

05/03/13 PERMIT SET

H.	Coordinators	Ives	Trimco, BBW, DCI
I.	Stops	Ives	Trimco, BBW, DCI
J.	Overhead Stops	Glynn-Johnson	Or Approved Equal
K.	Thresholds	National Guard	Pemko, Zero
L.	Seals & Bottoms	National Guard	Pemko, Zero

2.2 MATERIALS

A. Hinges: Exterior out-swinging door butts shall be non-ferrous material and shall have stainless steel hinge pins. All doors to have non-rising pins.
   1. Hinges shall be sized in accordance with the following:
      a. Height:
         1) Doors up to 41" wide: 4-1/2" inches.
         2) Doors 42" to 48" wide: 5 inches.
      b. Width: Sufficient to clear frame and trim when door swings 180 degrees.
      c. Number of Hinges: Furnish 3 hinges per leaf to 7'-5" in height. Add one for each additional 2 feet in height.
   2. Furnish non-removable pins (NRP) at all exterior out-swing doors and interior key lock doors with reverse bevels.

B. Floor Closers: Shall be equipped with compression springs, cam and roller operating mechanism and a one piece spindle-cam for maximum operating performance and longevity.

C. Extra Heavy duty Commercial Mortise Locks: Schlage “L” Series as scheduled with “06” Style Lever and “A” Style Rose.

   1. Locksets to comply with ANSI A156.13, Series 1000, Operational Grade 1 and Security Grade 1 with all standard trims. Locksets shall also comply with UL10C Positive Pressure requirements
   2. Lock case shall be manufactured with heavy 12 gauge steel with fully wrapped design. Lock cases with exposed edges are not acceptable. Lock case shall be multi-functional allowing transformation to a different function without opening lock case.
   3. Latchbolt shall have ¾” throw and be non-handed, field reversible without opening the lock case. Solid latchbolts and / or plastic anti-friction devices are not acceptable.
   4. The deadbolt, when used, shall be 1” throw stainless steel with a ¾” internal engagement when fully extended.
   5. All trim shall be through-bolted with the spring cages supporting the trim attached to the lock cases to prevent torquing.
   6. Levers to have independent rotation in both directions. Exterior lever assembly to be one-piece design attached by threaded bushing. Interior lever assembly shall be attached by screwless shank
   7. Thru-bolt lever assemblies through the door for positive interlock. Locks using a through the door spindle for attachment are not acceptable. Spindles shall be independent, designed to “break-away” at a maximum of 75psi torque.
   8. Hand of lock chassis to be changeable by simply moving one screw from one side to the case to the other and pulling and reversing the latchbolt.
   9. Cylinders to be secured by a cast stainless steel, dual retainer. Locks utilizing screws and / or stamped retainers are not acceptable.

D. Flush Bolts & Dust Proof Strikes: Automatic Flush Bolts shall be of the low operating force design. Utilize the top bolt only model for interior doors where applicable and as permitted by testing procedures.
   1. Manual flush bolts only permitted on storage or mechanical openings as scheduled.
   2. Provide dust proof strikes at openings using bottom bolts.

E. Door Stops:

05/03/13 PERMIT SET

1. Unless otherwise noted in Hardware Sets, provide wall type with appropriate fasteners. Where wall type cannot be used, provide floor type. If neither can be used, provide overhead type.
2. Do not install floor stops more than four (4) inches from the face of the wall or partition (CBC Section 1133B.8.6).
3. Overhead stops shall be made of stainless steel and non-plastic mechanisms and finished metal end caps. Field-changeable hold-open, friction and stop-only functions.

F. Protection Plates: Fabricate either kick, armor, or mop plates with four beveled edges. Provide kick plates 10" high and 2" LDW. Sizes of armor and mop plates shall be listed in the Hardware Schedule. Furnish with machine or wood screws of bronze or stainless to match other hardware.

G. Thresholds: As Scheduled and per details.
1. Thresholds shall not exceed 1/2" in height, with a beveled surface of 1:2 maximum slope.
2. Set thresholds in a full bed of butyl-rubber or polyisobutylene mastic sealant complying with requirements in Division 7 “Thermal and Moisture Protection”.
3. Use ¼” fasteners, red-head flat-head sleeve anchors (SS/FHSL).
4. Thresholds shall comply with CBC Section 1133B.2.4.1.

H. Seals: Provide silicone gasket at all rated and exterior doors.
1. Fire-rated Doors, Resilient Seals: UL10C Classified, Category “J” listed seals complying with NFPA 80 & NFPA 252 Standards. Coordinate with selected door manufacturers' and selected frame manufacturers' requirements.
2. Fire-rated Doors, Intumescent Seals: Furnished by selected door manufacturer. Category “G” furnish fire-labeled opening assembly complete and in full compliance with NFPA 252. Where required, intumescent seals vary in requirement by door type and door manufacture -- careful coordination required.
3. Smoke & Draft Control Doors, Provide Category “H” listed seals complying with NFPA 105 for use on “S” labeled Positive Pressure door assemblies.

I. Door Shoes & Door Top Caps: Provide door shoes at all exterior wood doors and top caps at all exterior out-swing doors.

J. Silencers: Furnish silencers for interior hollow metal frames, 3 for single doors, 2 for pairs of doors. Omit where sound or light seals occurs, or for fire-resistive-rated door assemblies.

05/03/13 PERMIT SET

2.3 KEYING

A. Furnish a masterkey system as directed by the owner or engineer.

B. A detailed keying schedule is to be prepared by the owner and/or engineer in consultation with a representative of the lock manufacturer. Each keyed cylinder on every keyed lock is to be listed separately showing the door #, key group (in BHMA terminology), cylinder type, finish and location on the door.

C. Establish a new masterkey system for this project as directed by the keying schedule.

D. Furnish all cylinders in the Schlage Full Size Interchangable Core (FSIC). Pack change keys independently (PKI)

E. Furnish construction keying for doors requiring locking during construction.

F. Furnish mechanical keys as follows:
   1. Furnish 2 cut change keys for each different change key code.
   2. Furnish 1 uncut key blank for each change key code.
   3. Furnish 6 cut masterkeys for each different masterkey set.
   4. Furnish 3 uncut key blanks for each masterkey set.
   5. Furnish 2 cut control keys cut to the top masterkey for permanent I/C cylinders.
   6. Furnish 1 cut control key cut to each SKD combination.

G. Furnish Schlage Padlocks and the cylinders to tie them into the masterkey system for gates, storage boxes, utility valve security, roof hatches and roll-up doors keyed as directed in the keying schedule.

2.4 FINISHES

A. Generally to be satin chrome US26D (626 on bronze and 652 on steel) unless otherwise noted.

B. Furnish push plates, pull plates and kick or armor plates in satin stainless steel US32D (630) unless other wise noted.

C. Door closers shall be powder-coated to match other hardware, unless otherwise noted.

D. Aluminum items to be finished anodized aluminum except thresholds which can be furnished as standard mill finish.

2.5 FASTENERS

A. Screws for strikes, face plates and similar items shall be flat head, countersunk type, provide machine screws for metal and standard wood screws for wood.

B. Screws for butt hinges shall be flathead, countersunk, full-thread type.

C. Fastening of closer bases or closer shoes to doors shall be by means of sex bolts and spray painted to match closer finish.

D. Provide expansion anchors for attaching hardware items to concrete or masonry.

E. All exposed fasteners shall have a phillips head.

F. Finish of exposed screws to match surface finish of hardware or other adjacent work.

G. All Exit Devices and Lock Protectors shall be fastened to the door by the means of sex bolts or through bolts.

PART 3 - EXECUTION

3.1 INSPECTION

A. Verify that doors and frames are square and plumb and ready to receive work and dimensions are as instructed by the manufacturer.

B. Beginning of installation means acceptance of existing conditions.

C. Fire-Rated Door Assembly Inspection: Upon completion of the installation, all fire door assemblies shall be inspected to confirm proper operation of the closing device and latching device and that

05/03/13 PERMIT SET

only the manufacturer's furnished fasteners are used for installation and that it meets all criteria of a fire door assembly per NFPA 80 (Standard for Fire Doors and Other Opening Protectives) 2007 Edition. A written record shall be maintained and transmitted to the Owner to be made available to the Authority Having Jurisdiction (AHJ). The inspection of the swinging fire doors shall be performed by a certified FDAI (Fire Door Assembly Inspector) with knowledge and understanding of the operating components of the type of door being subjected to the inspection. The record shall list each fire door assembly throughout the project and include each door number, an itemized list of hardware set components at each door opening, and each door location in the facility.

3.2 INSTALLATION

A. Install hardware in accordance with manufacturer's instructions and requirements of DHI.

B. Use the templates provided by hardware item manufacturer.

C. Mounting heights for hardware shall be as recommended by the Door and Hardware Institute. Operating hardware will to be located between 30" and 44" AFF.

D. Set units level, plumb and true to line and location. Adjust and reinforce the attachment substrate as necessary for proper installation and operation.

E. Drill and countersink units that are not factory-prepared for anchorage fasteners. Space fasteners and anchors in accordance with industry standards.

F. Set thresholds for exterior doors in full bed of butyl-rubber sealant.

G. If hand of door is changed during construction, make necessary changes in hardware at no additional cost.

3.3 ADJUST AND CLEAN

A. Adjust and check each operating item of hardware and each door, to ensure proper operation or function of every unit. Replace units which cannot be adjusted to operate freely and smoothly as intended for the application made.

B. Clean adjacent surface soiled by hardware installation.

C. Final Adjustment: Wherever hardware installation is made more than one month prior to acceptance or occupancy, return to that work area and make final check and adjustment of all hardware items in such space or area. Clean operating items as necessary to restore proper function and finish of hardware and doors. Adjust door control devices to compensate for final operation of heating and ventilating equipment.

D. Instruct Owner's Personnel in proper adjustment and maintenance of hardware finishes, during the final adjustment of hardware.

E. Continued Maintenance Service: Approximately six months after the completion of the project, the Contractor accompanied by the Architectural Hardware Consultant, shall return to the project and re-adjust every item of hardware to restore proper functions of doors and hardware. Consult with and instruct Owner's personnel in recommended additions to the maintenance procedures. Replace hardware items which have deteriorated or failed due to faulty design, materials or installation of hardware units. Prepare a written report of current and predictable problems (of substantial nature) in the performance of the hardware.

3.4 HARDWARE LOCATIONS

A. Conform to CCR, Title 24, Part 2; and ADAAG; and the drawings for access-compliant positioning requirements for the disabled.

3.5 FIELD QUALITY CONTROL

A. Architectural Hardware Consultant (AHC) to inspect installation and certify that hardware and it's installation have been furnished and installed in accordance with manufacturer's instructions and as specified herein.

05/03/13 PERMIT SET

SECTION 089100

LOUVERS

PART 1 - GENERAL

1.1 SUMMARY

A. Section Includes: Louvers and related accessories for complete installation.

B. Related Sections:
   1. Section 079200 – Joint Sealants: For sealants installed in perimeter joints between louver frames and adjoining construction.

1.2 REFERENCES

A. A. Air Movement and Control Association International, Inc.
   1. AMCA Standard 500-L-99 Laboratory Methods of Testing Louvers for Rating
   2. AMCA Publication 501 Application Manual for Louvers

B. The Aluminum Association Incorporated
   1. Aluminum Standards and Data
   2. Specifications and Guidelines for Aluminum Structures

C. American Society of Civil Engineers
   1. Minimum Design Loads for Buildings and Other Structures

D. American Society for Testing and Materials
   1. ASTM B209
   2. ASTM B211
   3. ASTM B221
   4. ASTM E90-90

E. Architectural Aluminum Manufacturers Association
   1. AAMA 800 Voluntary Specifications and Test Methods for Sealants
   2. AAMA 605.2 Voluntary Specification for High Performance Organic Coatings on Aluminum Extrusions and Panels.
   3. AAMA TIR Metal Curtain Wall Fasteners
   4. AAMA 2605-98 Superior Performing Organic Coatings on Aluminum Extrusions and Panels

1.3 SUBMITTALS

A. Product Data
   1. Air flow and water entrainment performance test results.
   2. Material types and thickness.

B. Shop Drawings
   1. Include elevations, sections and specific details for each louver.
   2. Show anchorage details and connections for all component parts.
   3. Include signed and sealed structural calculations.

C. Samples

D. Submit color chips for approval.

1.4 QUALITY ASSURANCE

A. A. Single subcontract responsibility: Subcontract the work to a single firm that has had not less than six years experience in the design and manufacturing of work similar to that shown and required.

B. Performance Requirements: Provide AMCA and BSRIA test data as required to confirm that the louvers have the specified air and water performance characteristics.

C. Structural Requirements: Design all materials to withstand wind and snow loads as required by the applicable building code. Maximum allowable deflection for the louver structural members to be l/180 or 0.75 inch, whichever is less. Maximum allowable deflection for the louver blades to be l/120 or 0.50 inch across the weak axis, whichever is less.

D. Warranty: Provide written warranty to the owner that all products will be free of defective materials or workmanship for a period of one year from date of installation.

1.5 DELIVERY, STORAGE, AND HANDLING

A. Delivery: At the time of delivery all materials shall be visually inspected for damage. Any damaged boxes, crates, louver sections, etc. shall be noted on the receiving ticket and immediately reported to the shipping company and the material manufacturer.

B. Storage:
1. Material may be stored flat, on end or on its side.
2. Material may be stored either indoors or outdoors.
3. If stored outdoors the material must be raised sufficiently off the ground to prevent it being flooded.
4. If stored outdoors the material must be covered with a weather proof flame resistant sheeting or tarpaulin.

C. Handling:
1. Material shall be handled in accordance with sound material handling practices and in such a way as to minimize racking.
2. Louver sections may be hoisted by attaching straps to the jambs and lifting the section while it is in a vertical position.
3. Louver sections should only be lifted and carried by the jambs. Heads, sills and blades are not to be used for lifting or hoisting louver sections.

1.6 WARRANTY

A. Provide written warranty jointly signed by manufacturer, installer and Contractor warranting work to be watertight, free from defective materials and workmanship, and agreeing to replace components which fail within 5 years from date of Substantial Completion.

PART 2 - PRODUCTS

2.1 MANUFACTURERS / PRODUCTS

A. Basis of Design: Construction Specailties, Inc, RS-2300, or approved equal.

2.2 LOUVER PROPERTIES

A. Material: Heads, sills, jambs and mullions to be one-piece structural aluminum members with integral caulking slot and retaining beads. Mullions shall be sliding interlock with integral drains. Blades to be one-piece aluminum extrusions with front lip gutter and multiple secondary gutters designed to catch and direct water to jamb and mullion downspouts. Louvers to be supplied with 4” (101.6mm) high by full depth sill flashings formed from minimum 0.050” (1.27mm) thick aluminum. Sill flashings to have welded side panels. Louvers and sill flashings to be installed in accordance with the manufacturer’s recommended procedures to ensure complete water integrity performance of the louver system.

B. AMCA Performance: A 4’ x 4’ unit shall conform to the following:
1. Free Area 6.77 sq. ft. (0.63 sq. m.)
2. Intake Pressure drop at 900 fpm free area velocity (274 m/min) 0.51 in. H2O (12.95 mm)

C. Wind Driven Rain Performance: The louver test was based on a 39.370"(1.00m) x 39.370" (1.00 m) core area. Unit tested at a rainfall rate of 3.0 inches per hour (75 mm/hr) and with a wind directed to the face of the louver at a velocity 29.1-mph (13 m/s). The test data shall show the water penetration effectiveness rating at each corresponding ventilation rate.

Core Ventilation Rate (m/s):	0.0	0.5	1.0	1.5	2.0	2.5	3.0	3.5
Core Ventilation Rate (ft/min):	0	106	196	291	391	493	582	667
Free Area Ventilation Rate (ft/min):	0	262	485	720	968	1220	1440	1651
Rating effectiveness:	A	A	A	B	C	D	D	D
Effectiveness Rating:	A = 1 to 0.99		B = 0.989 to 0.95		C = 0.949 to 0.80		D = 0.80 to 0	

2.3 MATERIALS

A. Aluminum Extrusions: ASTM B211, Alloy 6063-T5, 6063-T6 or 6061-T6.

B. Aluminum Sheet: ASTM B3209, Alloy 1100, 3003 or 5005.

2.4 FABRICATION

A. Provide C/S louver models, bird screens, structural supports and accessories as specified and/or shown on the drawings. Materials, sizes, depths, arrangements and material thickness to be as indicated or as required for optimal performance with respect to strength; durability; and uniform appearance.

B. Louvers to be mechanically assembled using stainless steel or aluminum fasteners.

C. Include supports, anchorage, and accessories required for complete assembly.

2.5 FINISH

A. GENERAL: Comply with NAAMM "Metal Finishes Manual" for finish designations and application recommendations, except as otherwise indicated. Apply finishes in factory. Protect finishes on exposed surfaces prior to shipment. Remove scratches and blemishes from exposed surfaces that will be visible after completing finishing process. Color by engineer.

B. Two Coat Metallic Fluorocarbon Coating
   1. Louvers to be finished with a minimum 1.0 mil (0.025mm) thick full strength 70% resin, 2 coat Fluoropolymer system.
   2. All aluminum shall be thoroughly cleaned, etched and given a chromated conversion pretreatment before application of the MICA II coating. The coating shall consist of a primer and a pearlescent pigmented PFV2 topcoat. It shall receive a bake cycle of 17 minutes a 450 deg. F. All finishing procedures shall be one continuous operation in the plant of the manufacturer.
   3. Manufacturer to furnish an extended 20 limited warranty for the Kynar/Hylar coating. This limited warranty shall begin on the date of material shipment.

2.6 BIRD SCREEN

A. Unless otherwise indicated, all louvers to be furnished with mill finish bird or insect screens.

B. Screens to be 5/8” (15.9mm) mesh, 0.050” (1.27mm) thick expanded and flattened aluminum bird screen secured within 0.055” (1.40mm) thick extruded aluminum frames. Frames to have mitered corners and corner locks.

PART 3 - EXECUTION

3.1 EXAMINATION

A. Examine openings to receive the work. Do not proceed until any unsatisfactory conditions have been corrected.

3.2 INSTALLATION

A. Comply with manufacturer's instructions and recommendations for installation of the work.

B. Verify dimensions of supporting structure at the site by accurate field measurements so that the work will be accurately designed, fabricated and fitted to the structure.

C. Anchor louvers to the building substructure as indicated on architectural drawings.

D. Erection Tolerances:
   1. Maximum variation from plane or location shown on the approved shop drawings: 1/8" per 12 feet of length, but not exceeding 1/2" in any total building length or portion thereof (noncumulative).
   2. Maximum offset from true alignment between two members abutting end to end, edge-to edge in line or separated by less than 3": 1/16" (shop or field joints). This limiting condition shall prevail under both load and no load conditions.

E. Cut and trim component parts during erection only with the approval of the manufacturer or fabricator, and in accordance with his recommendations. Restore finish completely. Remove and replace members where cutting and trimming has impaired the strength or appearance of the assembly.

F. Do not erect warped, bowed, deformed or otherwise damaged or defaced members. Remove and replace any members damaged in the erection process as directed.

G. Set units level, plumb and true to line, with uniform joints.

3.3 PROTECTION

A. Protect installed materials to prevent damage by other trades. Use materials that may be easily removed without leaving residue or permanent stains.

3.4 CLEANING

A. Immediately clean exposed surfaces of the louvers to remove fingerprints and dirt accumulation during the installation process. Do not let soiling remain until the final cleaning.

B. Before final inspection, clean exposed surfaces with water and a mild soap or detergent not harmful to the material finishes. Thoroughly rinse surfaces and dry.

C. Restore louvers and accessory components damaged during installation and construction so no evidence remains of corrective work. If results of restoration are unsuccessful, as determined by the engineer, remove damaged materials and replace with new materials.
   1. Touch up minor abrasions in finishes with a compatible air-dried coating that matches the color and gloss of the factory applied coating.

END OF SECTION

05/03/13 PERMIT SET

SECTION 099000

PAINTING AND COATING

PART 1 - GENERAL

1.1 SUMMARY

A. Section Includes:
   1. Preparation and priming of surfaces scheduled in PART 2 of this section to receive finish coatings.
   2. Painting and finish coating of exterior and interior items and surfaces, including but not limited to:
      a. Scheduled and otherwise identified exterior surfaces.
      b. Exposed interior and exterior steel structure, and piping.
   3. Exterior and interior items and surfaces not requiring painting, unless noted otherwise:
      a. Items with factory applied finishes.
      b. Moving parts of operating units.
      c. Code required labels or equipment identification plates.
      d. Acoustical ceilings.
   4. Field finish coating of shop or factory primed items. Refer to individual Sections for priming requirements.
   5. Finish coatings schedule.
   6. Preparation work and coatings specified in this Section are in addition to shop and factory applied finishes and surface treatment specified in other Sections.
   7. Paint all other items unless specifically indicated not to be painted.

1.2 DEFINITIONS

A. Conform to PDCA Glossary for interpretation of terms used in this Section except as modified below.

B. Exposed Surfaces: Surfaces of products, assemblies, and components visible from any angle after final installation. Includes internal surfaces visible when operable doors, panels or drawers are open, and surfaces visible behind registers, grilles, or louvers.

C. Concealed Surfaces: Surfaces permanently hidden from view in finished construction and which are only visible after removal or disassembly of part or all of product or assembly.

D. Inaccessible Spaces: Spaces not intended for human use.

E. Sheen: Degree of luster as measured with specular gloss meter in accordance with ASTM D523:

Flat:	85 degree meter	Below 15
Eggshell:	60 degree meter	5 to 20
Satin:	60 degree meter	15 to 35
Semi-gloss:	60 degree meter	30 to 65
Gloss:	60 degree meter	65 to 80
High Gloss:	60 degree meter	Over 80

F. System DFT: Dry film thickness of entire coating system unless otherwise noted.

1.3 SYSTEM REQUIREMENTS

A. Do not walk upon or stage from low roofs to paint walls above. Use bucket trucks to reach over low roofs.
   1. Asbestos: Existing corrugated siding and roofing are asbestos bearing materials.
   2. Lead Paint:
      a. Building dates prior to 1976 and it is assumed lead-based paint has been used on interior and exterior surfaces.
      b. Do not abrade, sand, or scuff existing painted surfaces.
      c. Powerwash surfaces to prepare for repainting.
      d. Special attention is required for repair of rusted surfaces.

05/03/13 PERMIT SET

B. Perform testing according to following methods:
   1. Solids Content by Volume: ASTM D2832.
   2. Surface Burning Characteristics: ASTM E84.

C. Interface with Adjacent Systems:
   1. Review other Sections specifying prime coats to ensure compatibility of total coating system for various substrates.
   2. Upon request from other trades, furnish information on characteristics of finish materials proposed for use to ensure compatibility of various coatings.
   3. Test compatibility of existing coatings, including shop applied primers and previously applied coatings, by applying specified special coating to small, inconspicuous area.
   4. If specified coating lifts or blisters existing coating, apply barrier or tie coat as recommended by coating manufacturer.
   5. If no compatible barrier or tie coat exists, remove existing coating completely and apply coating system as specified for new work.

1.4 SUBMITTALS

A. Product Data:
   1. Submit product data, including label analysis for each product proposed for use.
   2. Specifically include percent solids-by-volume, volatile organic compound (VOC) content (g/L), and lead content (percent of weight of dried film).
   3. Schedule:
      a. List each material proposed for use, and cross-reference to specific coating system and substrate application.
      b. Identify each material by manufacturer's catalog number, product name, and generic classification.
      c. Include typewritten list identifying coating systems and colors applied to each room, space, or item.

B. Color and Sheen Samples:
   1. Prepare 1 sample of each opaque finish coating specified in each color and sheen scheduled for appearance verification.
   2. Apply to 12 by 12 by 1/4 inch hardboard. Apply sufficient coating thickness to provide proper hiding and appearance.
   3. Label each sample to indicate material, color, and sheen.

C. Coating System Samples:
   1. Prepare 1 sample of each opaque coating system scheduled on actual substrate materials proposed for use. Apply in most common top coat color scheduled.
   2. Step back each coat and process at least one inch to show bare substrate and each coat and process in system build-up.
   3. Minimum sample size of 4 by 8 inches.
   4. Label each sample to indicate materials, color, sheen, DFT of each coat applied, and total system DFT.

D. Submit following Informational Submittals:
   1. Certifications specified in Quality Assurance article.
   2. Qualification Data: Applicator's qualification data.
   3. Manufacturer's instructions.

E. Closeout Submittals:
   1. Warranty: Submit specified warranty.

1.5 QUALITY ASSURANCE

A. Single Source Responsibility:
   1. Provide products of single manufacturer for use in each coating system.
   2. Do not mix products of different manufacturers without approval of engineer and manufacturers involved.
   3. Provide manufacturer recommended materials (base and tints) for deep tone colors.

B. Applicator Qualifications: Company specializing in commercial painting and finishing with 3 years documented experience.

C. Regulatory Requirements:
   1. Comply with CPSC 16 CFR 1303 and other applicable federal, state, and local regulations limiting lead content of coatings to be applied.

D. Certifications: Submit certification from manufacturer that materials furnished for use on this Project meet or exceed specified requirements and comply with applicable federal, state, and local requirements regarding lead and VOC content.

1.6 FIELD SAMPLES

A. Sample Installation: Duplicate finishes of approved coating system samples on wall surfaces and other interior and exterior components selected by Engineer.

B. Provide full-coat finish on at least 100 sq ft of surface until required color, sheen, and texture are obtained. Simulate finished lighting conditions for review of in-place work.

C. Request review by Engineer of first finished room, space, or item for each coating system for color, texture, quality, and workmanship.

1.7 DELIVERY, STORAGE, AND HANDLING

A. Deliver, store, and handle products in accordance manufacturer’s instructions.

B. Deliver products to site in manufacturer's sealed and labeled containers; inspect to verify compliance with specified requirements.

C. Label containers to indicate manufacturer's name, product name and type of coating, brand code or stock number, date of manufacture, coverage, surface preparation, drying time, cleanup, color designation and instructions for mixing and reducing.

D. Store coating materials in tightly covered containers in well ventilated area at ambient temperatures of 45 degrees F minimum and 90 degrees F maximum, unless required otherwise by manufacturer. Maintain containers in clean condition, free of foreign materials and residue with labels in legible condition.

E. Take precautionary measures to prevent fire hazards and spontaneous combustion.

1.8 PROJECT CONDITIONS

A. Environmental Conditions: Comply with more restrictive of following or manufacturer's requirements under which systems can be applied.
   1. Provide continuous ventilation during application of coatings to exhaust hazardous fumes.
   2. Provide heating necessary to maintain surface and ambient temperatures within specified limits.
   3. Maintain temperature and humidity conditions for minimum 24 hours before, during, and 48 hours after application of finishes, unless longer times are required by manufacturer.
   4. Do not permit wide variations in ambient temperatures which might result in condensation on freshly coated surfaces.
   5. Provide illumination of not less than 80 footcandles measured mid-height at substrate surface during application of coatings.
   6. Apply water reducible coatings only when ambient and surface temperatures are between 50 degrees F and 90 degrees F.
   7. Apply solvent reducible coatings only when ambient and surface temperatures are between 45 degrees F and 90 degrees F.
   8. Do not apply coatings under any of following conditions:
      a. When surfaces are damp or wet.
      b. During rain, fog, or mist.
      c. When relative humidity is less than 20 percent or exceeds 85 percent.
      d. When temperature is less than 5 degrees F above dew point.
      e. When dust may be generated before coatings have dried.
      f. In direct sunlight.
      g. When wind velocity is above 20 mph.

9. Application of coatings may continue during inclement weather provided work areas and surfaces to be coated are enclosed and specified environmental conditions are maintained.

1.9 WARRANTY

A. Warrant installation to be free from defects in material and workmanship for 5 years.

B. Repair or replace defects occurring during warranty period.

C. Defects include but are not limited to pinholes, crazing or cracking, loss of adhesion to substrate, deficient thickness, improper materials and workmanship.

1.10 EXTRA STOCK MATERIAL

A. Provide 1 unopened gallon container of each type of opaque top coating in each color and sheen used on Project.

B. Store where directed with labels intact.

PART 2 - PRODUCTS

2.1 COATING MATERIALS - GENERAL

A. Coatings:
   1. Ready-mixed, factory tinted, best professional grade produced by manufacturer.
   2. Use manufacturer's appropriate base materials to achieve required colors.
   3. Fully grind pigments to maintain soft paste consistency in vehicle.
   4. Capable of being dispersed into uniform, homogeneous mixture.
   5. Possess good flowing and brushing properties.
   6. Capable of drying or curing free of streaks or sags, and yielding specified finish.
   7. VOC content of field applied coatings shall comply with local governing authorities.

B. Paint Maximum Product Emissions Limits: Top coat and primer interior paints must meet or not exceed the VOC (Volatile Organic Compounds) limits of the current requirements of Green Seal Standards GS-11 - Paints in the building, and Cal-GREEN Table 5.504.4.3 for VOC Content Limits for Architectural Coatings.

C. Cal-GREEN Requirements for typical paint coatings:
   1. Primers, Sealers, and Undercoaters: 100 grams per liter of product minus water
   2. Flats: 50 grams per liter of product minus water
   3. Non-flats: 100 grams per liter of product minus water
   4. Non-flat High Gloss: 150 grams per liter of product minus water

2.2 FINISH PAINTING SYSTEMS

A. General: System DFT specified identifies the minimum of the acceptable range.

B. Exterior Coating Systems:
   1. Corrugated siding and roofing:
   2. System No. EC-1 (Latex Finish):
      a. Sheen: Eggshell.
      b. Prime Coat: Alkali Resistant Primer at 1.5 mils.
      c. Under Coat: Exterior Latex House Paint at 1.5 mils.
      d. Top Coat: Exterior Latex House Paint at 1.5 mils.
      e. System DFT: 3.0 mils.

C. Metal Surfaces:
   1. Paint System No. PT-M2 (Latex Finish):
      a. Surface: Exterior non-ferrous metals and zinc-coated (galvanized) steel.
      b. Sheen: Semi-Gloss.
      c. Prime Coat: Universal Primer at 2.0 mils.
      d. Under Coat: Premium Acrylic Latex at 1.5 mils.
      e. Top Coat: Premium Acrylic Latex at 1.5 mils.
      f. System DFT: 5.0 mils.

2. Paint System No. PT-M4 (Latex Finish):
   a. Surface: Interior non-ferrous metals and zinc-coated (galvanized) steel.
   b. Sheen: Semi-Gloss.
   c. Prime Coat: Universal Primer at 2.0 mils.
   d. Under Coat: Low-VOC interior latex/acrylic based paint at 1.4 mils.
   e. Top Coat: Low-VOC interior latex/acrylic based paint at 1.4 mils.
   f. System DFT: 4.8 mils
3. Paint System No. PT-M8 (Latex Finish):
   a. Surface: Interior ferrous metals - uncoated.
   b. Sheen: Semi-Gloss.
   c. Prime Coat: Universal Primer at 3.0 mils.
   d. Under Coat: Low-VOC interior latex/acrylic based paint at 1.4 mils.
   e. Top Coat: Low-VOC interior latex/acrylic based paint at 1.4 mils.
   f. System DFT: 5.8 mils.
4. Paint System No. PT-M10 (Latex Finish):
   a. Surface: Exterior ferrous metals - previously coated.
   b. Sheen: Semi-Gloss.
   c. Prime Coat: Touch-up existing with compatible primer.
   d. Under Coat: Exterior Premium Acrylic Latex Paint at 2.5 mils.
   e. Top Coat: Exterior Premium Acrylic Latex Paint at 2.5 mils.
   f. System DFT: 5.0 mils (excluding existing and touch-up primer).
5. Paint System No. PT-M12 (Latex Finish):
   a. Surface: Interior ferrous metals - previously coated.
   b. Sheen: Semi-Gloss.
   c. Prime Coat: Touch-up existing with compatible primer.
   d. Under Coat: Low-VOC interior latex/acrylic based paint at 1.4 mils.
   e. Top Coat: Low-VOC interior latex/acrylic based paint at 1.4 mils.
   f. System DFT: 2.8 mils (excluding existing and touch-up primer).

D. Gypsum Board, MDF Base and Paint Grade Wood Door Surfaces:
1. Paint System No. PT-G5 (Non VOC, Latex/Acrylic Finish):
   a. Surface: Interior gypsum board walls and ceilings; MDF base, and MDO paint grade wood doors.
   b. Sheen: Eggshell typical; semi-gloss in bathrooms, restrooms, and other wet areas.
   c. Prime Coat: Manufacturers standard Non VOC Primer at 1.0 mils.
   d. Under Coat: Low-VOC interior latex/acrylic based paint at 1.4 mils.
   e. Top Coat: Low-VOC interior latex/acrylic based paint at 1.4 mils.
   f. System DFT: 3.8 mils.

2.3 PRIMERS

A. Exterior Cal-GREEN Compliant Alkali Resistant Primer:
1. Benjamin Moore: Regal Select Primer (546)
2. Dunn-Edwards: Eff-Stop Primer(ESPR00)
3. Glidden Professional: Bond Prep Sealer (3030)
4. Sherwin-Williams: Loxon Masonry Primer (A24W8300)
5. Vista: Uniprime II Acrylic Masonry Primer (4600)

B. Universal Metal Primer:
1. Benjamin Moore: Acrylic Metal Primer (M04)
2. Dunn-Edwards: Ultra Grip Premium ((UGPR00)
3. Glidden Professional: Devoe Devflex DTM Primer (4020).
4. Sherwin-Williams: Pro-Industrial Pro-Cryl Universal Primer (B66-310).
5. Vista: Protec Primer (No. 9600).

C. Interior Low VOC Latex Primer:
   1. Benjamin Moore and Company: Natura Primer (511).
   2. Dunn-Edwards: ENSO Zero VOC Interior Primer (ENSO 00).
   3. Glidden Professional: Lifemaster No VOC Interior Primer (GP 9116).
   4. Sherwin-Williams: Harmony Primer (B11W900)
   5. Vista: Carefree Earth Coat Zero VOC Primer (6000)

2.4 WATER REDUCIBLE PAINTS

A. Exterior Premium Acrylic Latex House Paint:
   1. Benjamin Moore and Company:
      a. Flat: Regal Select Flat (400)
      b. Satin: Regal Select Low Luster (401)
      c. Semi-Gloss: Regal Select Soft Gloss (402)
      d. Gloss: NA
   2. Dunn-Edwards:
      a. Flat: Evershield Flat (EVSH10)
      b. Satin: Evershield Low Sheen (EVSH40-0).
      c. Semi-Gloss: Evershield Semi Gloss (EVSH50)
      d. Gloss: Evershield Gloss (EVSH60-0).
   3. Glidden Professional:
      a. Flat: Fortis 450 Flat (6201).
      b. Satin: Fortis 450 Satin (6403)
      c. Semi-Gloss: Fortis 450 Semi-Gloss (6407)
      d. Gloss: NA
   4. Sherwin-Williams:
      a. Flat: Duration Flat (K32).
      b. Satin: Duration (K33).
      c. Semi-Gloss: Metalatex SG (B42)
      d. Gloss: Duration (K34)
   5. Vista:
      a. Flat: Duratone (2000)
      b. Eggshell: Carefree 100% Acrylic Eggshell (8300)
      c. Semi-Gloss: Carefree 100% Acrylic Semi Gloss (8400)
      d. Gloss: Carefree 100% Acrylic Gloss (8500)

B. Low-VOC Interior Latex/Acrylic Based Paint:
   1. Benjamin Moore and Company:
      a. Flat, Natura Flat (512)
      b. Eggshell, Natura Eggshell (513)
      c. Semi-Gloss, Natura Semi-Gloss (514)
   2. Dunn-Edwards:
      a. Flat: Enso Flat (ENSO 10)
      b. Eggshell: Enso Eggshell (ENSO 40)
      c. Semi-Gloss: Enso Semi Gloss (ENSO 50).
   3. Glidden Professional:
      a. Flat: Lifemaster No VOC Flat (9100).
      b. Eggshell: Lifemaster No VOC Eggshell (9300).
      c. Semi-Gloss: Lifemaster No VOC Semi-Gloss (9200).
   4. Sherwin-Williams:
      a. Flat: Harmony Flat (B5).
      b. Eggshell: Harmony Eggshell (B9)
      c. Semi-Gloss: Harmony Semi-Gloss (B10).
   5. Vista;
      a. Flat: Carefree Earth Coat Zero VOC Flat (6100)
      b. Eggshell: Carefree Earth Coat Zero VOC Eggshell (6300)
      c. Semi-Gloss: Carefree Earth Coat Zero VOC Semi-Gloss (6400)

05/03/13 PERMIT SET

C. Dry Erase Coating:
   1. Basis of Design: Wink by Master Coating Technologies.
   2. Idea Paint by Glidden Professional.
   3. Color: Clear to show paint color below.

2.5 ACCESSORY MATERIALS

A. Muriatic acid, mildewcide, TSP (tri-sodium phosphate), acidic-detergent, zinc sulfate, sodium metasilicate, and solvent: Commercially available, non-damaging to surface being cleaned; as specified in PDCA Specification Manual; acceptable to coating manufacturer.

B. Metal Conditioner: Proprietary phosphoric acid based, etching type solution; acceptable to coating manufacturer.

C. Rust Inhibitor: Water containing 0.32 percent of sodium nitrite and 1.28 percent by weight of secondary ammonium phosphate (dibasic); or water containing 0.2 percent by weight of chromic acid or sodium chromate or sodium dichromate or potassium dichromate.

D. Spackling compound, putty, plastic wood filler, liquid de-glosser, latex patching plaster, latex base filler, thinners, and other materials not specifically indicated but required to achieve finishes specified: Pure, of highest commercial quality, compatible with coatings and acceptable to coating manufacturer.

E. Do not use products of different manufacturers in combination.

2.6 MIXING

A. Use factory prepared colors matching approved samples. Site tinting will not be permitted.

B. Thoroughly mix and stir coatings before use to ensure homogeneous dispersion of ingredients. Prior to application, blend multiple containers of same material and color by pouring from one container to another several times to ensure uniform consistency, color, and smoothness.

C. Mix only in clean mixing pails of material recommended by manufacturer to avoid contamination.

D. Remove film which may form on surface of material in containers and strain material before using. Stir frequently during use to maintain pigments in suspension. Do not stir film into material.

E. Apply coatings of consistency recommended by manufacturer. Thin only within recommended limits using thinners approved by coating manufacturer.

2.7 COLORS AND FINISHES

A. Colors: Refer to Drawings.

B. Sheen:
   1. Ceilings and Walls: Satin/Eggshell elsewhere unless noted otherwise.
   2. Ceilings and Walls in Wet Areas: Semi-Gloss, unless noted otherwise.
   3. Metal Doors and Frames: Semi-gloss, unless noted otherwise.
   4. Metals with accent colors – Semi-gloss, unless noted otherwise.
   5. Painted Wood: Semi-gloss, unless noted otherwise.

PART 3 - EXECUTION

3.1 EXAMINATION

A. Examine conditions and proceed with work when substrates and environmental conditions are ready.

B. Measure moisture content of substrates using recently calibrated electronic moisture meter. Do not apply coatings if moisture content of surfaces exceeds lesser of percentages listed below or those required by coating manufacturer. If excess moisture content exists and cannot be reduced, obtain written approval of coating manufacturer before application of coatings.
   1. Common board and dimension lumber: 12 percent; measure with resistance-type meter in accordance with ASTM D4442.
   2. Masonry, concrete, CMU, and Portland cement plaster: 17 percent for solvent reduced coatings. Test concrete floors in accordance with ASTM D4263.

C. Prior to applying alkali and acid sensitive coatings, test surface pH with universal pH paper placed against wetted surface. Substrate pH shall not exceed pH of clean wash water.

D. Beginning of execution constitutes acceptance of existing conditions.

3.2 PREPARATION - GENERAL

A. Protect completed construction from damage. Furnish drop cloths, shields, and protective methods to prevent spray, splatter, or droppings from disfiguring other surfaces.

B. Remove surface hardware, mechanical diffusers, escutcheons, registers, electrical plates, light fixture trim, fittings, fastenings and similar items prior to preparing surfaces for finishing. Provide surface-applied protective masking for non-removable items. Carefully store removed items for reinstallation.

C. Remove mildew by scrubbing with mildewcide. Rinse thoroughly with clean water.

D. Before beginning application of coatings, ensure surfaces are clean, dry, and free of dirt, dust, rust or rust scale, oil, grease, mold, mildew, algae, efflorescence, release agents, or any other foreign material which could adversely affect coating adhesion or finished appearance.

3.3 SURFACE PREPARATION FOR NEW WORK

A. General:
   1. Correct minor defects.
   2. Remove temporary labels, wrappings, and protective coverings from surfaces to be coated.
   3. Seal stains, marks, and other imperfections which may bleed through surface finishes.

B. Aluminum:
   1. Clean in accordance with SSPC SP1 "Solvent Cleaning".
   2. Apply etching type primer.

C. Cloth Insulation Coverings:
   1. Remove dirt, grease, oil, and other foreign substances.
   2. Seal with thin coating of drywall compound thinned with latex PVA primer to working consistency.

D. Concrete:
   1. Prior to application of coatings, allow surfaces to cure minimum 60 days.
   2. Remove dirt, scale, powder, laitance, and bond breakers by light sandblasting to minimum 1.5 mil profile.
   3. Remove oil and grease with solution of TSP; rinse well.
   4. Remove stains caused by weathering or corroding metals with solution of sodium metasilicate applied after thoroughly wetting surface with potable water; allow to dry.
   5. Fill cracks and voids with compatible filler.

E. Masonry:
   1. Prior to application of coatings, allow surfaces to cure minimum 28 days.
   2. Remove dirt, scale, loose mortar, efflorescence, and powder by wire brushing or by other approved methods.
   3. Remove oil and grease with solution of TSP, rinse, and allow to dry.
   4. Remove stains caused by weathering or corroding metals with solution of sodium metasilicate applied after thoroughly wetting surface with potable water; allow to dry.
   5. Wash and neutralize surfaces as recommended by coating manufacturer, rinse, and allow to dry.

F. Steel - Uncoated:
   1. Remove weld spatter by chipping or grinding.
   2. Clean interior and weather protected steel in accordance with SSPC SP2 "Hand Tool Cleaning" and SP3 "Power Tool Cleaning". Clean areas of excessive corrosion or scale in accordance with SSPC SP7 "Brush-Off Blast Cleaning".
   3. Clean exterior steel permanently exposed to elements in accordance with SSPC SP6 "Commercial Blast Cleaning".

4. Apply metal conditioner to bare surfaces in accordance with manufacturer's recommendations, paying particular attention to abrasions, welds, bolts, and nuts. Allow to set as recommended by solution manufacturer. Rinse with clean water with rust inhibitor mixed with water or applied immediately following rinse. Allow to dry.
5. Prime coat immediately.

G. Steel - Prime Coated:
1. Remove loose primer and rust to feather-edge at adjacent sound primer by cleaning in accordance with SSPC SP2 "Hand Tool Cleaning" and SP3 "Power Tool Cleaning".
2. Apply metal conditioner to abrasions, welds, bolts, and nuts in accordance with manufacturer's recommendations. Allow to set as recommended by manufacturer. Rinse with clean water with rust inhibitor mixed with water or applied immediately following rinse. Allow to dry.
3. Prime coat bare areas immediately.

H. Galvanized Steel: Remove soluble and insoluble contaminants and corrosion. Sweep (Abrasive) Blasting per ASTM D6386 to achieve a uniform anchor profile (1.0 - 2.0 mils).

3.4 SURFACE PREPARATION OF PREVIOUSLY COATED SURFACES

A. General:
1. Remove cracked and deteriorated sealants and calking.
2. Remove chalk deposits and loose, blistered, peeling, scaling, or crazed finish to bare base material or sound substrate by scraping and sanding.
3. Wash surfaces with solution of TSP to remove wax, oil, grease, and other foreign material; rinse, and allow to dry. Exercise caution that TSP solution does not soften existing coating.
4. Abrade glossy surfaces by sanding or wiping with liquid de-glosser.
5. Remove mildew as specified above.
6. Test compatibility of existing coatings by applying new coating to small, inconspicuous area. If new coatings lift or blister existing coatings, request recommendation from engineer.
7. Apply specified primer to surfaces scheduled to receive coatings.

B. Concrete, Masonry, and corrugated siding:
1. Fill cracks and voids with latex base filler.
2. Apply masonry conditioner to masonry surfaces in accordance with manufacturer's instructions.
3. Apply primer over bare surfaces and filler material.

C. Metal:
1. Remove rust from surfaces to bare metal in accordance with SSPC SP6 "Commercial Blast Cleaning".
2. Exercise care not to remove galvanizing.
3. Complete preparation as specified for new work.

3.5 APPLICATION

A. General Requirements:
1. Coat all surfaces specified, scheduled, illustrated, and otherwise exposed unless specifically noted otherwise.
2. Apply coatings of type, color, and sheen as scheduled.
3. Apply products in accordance with manufacturer’s instructions. Use application materials, equipment, and techniques as recommended by coating manufacturer and best suited for substrate and type of material being applied.
4. Do not apply finishes to surfaces that are improperly prepared.
5. Number of coats specified are minimum number acceptable.
6. Apply coating systems to total dry film thickness scheduled. Apply material at not less than manufacturer's recommended spreading rate. Do not exceed maximum single coat thickness recommended by coating manufacturer. Do not double-back with spray equipment building up film thickness of two coats in one pass.
7. Ensure that edges, corners, crevices, welds, and exposed fasteners receive dry film thickness equivalent of flat surfaces.

8. Finish edges of coatings adjoining other materials or colors sharp and clean, without overlapping.

B. Prime Coats:
1. Apply initial coat to surfaces as soon as practical after preparation and before subsequent surface deterioration.
2. Backprime exterior woodwork with specified primer.
3. Backprime interior woodwork scheduled to receive transparent finish with gloss varnish reduced 25 percent with mineral spirits.
4. Apply primer to wood and metal sash before field glazing.

C. Intermediate and Top Coats:
1. Allow previously applied coat to dry before next coat is applied.
2. Sand and dust lightly between coats as recommended by coating manufacturer.
3. Apply each coat to achieve uniform finish, color, appearance, and coverage free of brush and roller marks, runs, misses, visible laps or shadows, hazing, bubbles, pin holes, or other defects.
4. If stains, undercoats, or other conditions show through final topcoat, correct defects and apply additional topcoats until coating film is of uniform finish, color, and appearance.

D. Finish Matching:
1. Finish closets same as adjoining rooms, unless otherwise specified.
2. Finish tops, bottoms, and edges of doors same as door faces. Apply sanding sealer to cut-outs. When faces are different colors, finish edges of doors to match space from which they are visible when door is in partly open position.
3. Finish other surfaces not specifically mentioned to match adjoining surfaces.

E. Reinstall trim, fittings, and other items removed for finishing.

3.6 FIELD QUALITY CONTROL

A. Periodically test film thickness of each coat with wet film gage to ensure coatings are being applied to proper thickness.

B. Request review of each applied coat by engineer before application of successive coats. Only reviewed coats will be considered in determining number of coats applied.

C. Immediately prior to Substantial Completion, perform detailed inspection of painted surfaces and repair or refinish abraded, stained, or otherwise disfigured surfaces.

D. Testing: Owner reserves right to employ independent testing agency to verify acceptability of substrates and conformance of coating materials to specified requirements; and to test coating quality and dry film thickness.

E. If test results show that material does not comply with specified requirements, remove noncomplying coatings, recoat with acceptable material, and pay costs of additional testing to ensure compliance.

3.7 CLEANING

A. Promptly remove spilled, splashed, or spattered coatings. Clean spots, oil, and other soiling from finished surfaces using cleaning agents and methods which will not damage materials.

B. If completed construction is damaged beyond normal cleaning or repair by painting operations, replace damaged items at no additional cost to Owner.

C. Maintain premises and storage areas free of unnecessary accumulation of tools, equipment, surplus materials, and debris.

D. Collect waste, cloths, and material which may constitute fire hazards and place in closed metal containers; remove from site daily along with empty containers.

3.8 PROTECTION

A. Protect finished work.

B. Protect work of other trades against damage from coating activities. Correct damage by cleaning, repairing, replacing, and recoating as acceptable to engineer.

05/03/13 PERMIT SET

C. Provide "Wet Paint" signs and other methods to protect newly coated surfaces. Remove when directed or when no longer needed.

END OF SECTION

05/03/13 PERMIT SET

SECTION 101453

TRAFFIC SIGNAGE

PART 1 – GENERAL

1.01 DESCRIPTION

A. This Section includes specifications for the Right-of-Way Signage and Roadway Signage, including Object Markers.

1.02 REFERENCE STANDARDS

A. ASTM International (ASTM):

1. A167 Specification for Stainless and Heat-Resisting Chromium-Nickel Steel Plate, Sheet, and Strip
2. B209 Specification for Aluminum and Aluminum-Alloy Sheet and Plate
3. D635 Test Method for Rate of Burning and/or Extent and Time of Burning of Plastics in a Horizontal Position
4. D3841 Specification for Glass-Fiber-Reinforced Polyester Plastic Panels
5. D4956 Specifications for Retroreflective Sheeting

B. California Manual on Uniform Traffic Control Devices (Federal Highway Administration MUTCD 2009, as amended for use in California) (CMUTCD 2010)

C. State of California, Department of Transportation (Caltrans), Standard Specifications (2006):

1. Section 56 Signs.
2. Section 75 Miscellaneous Metals.
3. Section 82 Markers and Delineators

D. State of California, Department of Transportation (Caltrans), Standard Plans (2006)

1.03 SYSTEM DESCRIPTION

A. Signage, unless otherwise noted, shall conform to Caltrans Standard Specifications, Section 56, Signs, and CMUTCD.

1.04 SUBMITTALS

A. Shop Drawings: Show sizes and thickness of all members, types of materials, methods of construction and assembly, complete sign and framing dimensions including span length and post heights, hangers, brackets, anchorage, relationship to surrounding work by other

trades, shop finishes, sign designs, layouts, lettering (including letter spacing), and other pertinent details of fabrication and installation.

B. Manufacturer's Data: Submit sign manufacturer's descriptive data.

C. Samples: Submit samples of all materials under this Section, as follows:

1. Samples of all colors proposed for use on all signs, at least 8 inches by 8 inches.

2. Full-size paper proofs of all signs, marked with proposed colors.

3. After approval of color match and lettering proofs, submit for approval one full size sign of each type, as selected by the Engineer, complete and ready for installation. Submit as many times as necessary until approval by the Engineer has been obtained. Sample sign, upon approval, shall serve as the standard to be equaled by all other work.

4. Submit manufacturer's color palette for fiberglass sign panels and frames for color selection.

D. Certification of Compliance: Certify that aluminum posts for fiberglass sign panels will withstand 100 mile per hour wind loading. For signs, certify that aluminum posts for aluminum sign panels will withstand 60 mile per hour wind loading.

1.05 QUALITY ASSURANCE

Installation work under this Section shall be performed by experienced sign erectors.

1.06 DELIVERY, STORAGE, AND HANDLING

A. Ship sign panels in such a manner as to ensure their arrival on the job site in an undamaged condition.

B. Deliver and store material in a manner to prevent cracking, chipping or stress of the components, and to prevent mechanical damage or weather damage.

1.07 WARRANTY

Provide a 5 year warranty against material defects.

PART 2 - PRODUCTS

2.01 SIGN PANELS

A. Signs shall conform to the provisions in Section 56, Signs, of the Caltrans Standard Specifications and Plans, details shown on the Plans, and these technical provisions.

B. Roadside sign panels (salvaged) that are damaged shall be replaced at the Contractor’s expense. New roadside signs shall consist of reflective sheeting on an aluminum substrate. The reflective sheeting shall conform to the provisions of AASHTO M268 and FHA FP-85 Type II-A and consisting of spherical lens elements adhered to a synthetic resin and enclosed by a flexible, transparent, weatherproof plastic having a smooth outer surface as manufactured by 3M, Seibulite, or Engineer-approved equal. The backing medium shall be synthetic sheet resin or other suitable non-cellulosic material.

C. Substrate: Sheet aluminum, alloys 6061-T6 or 5052-H38 in accordance with ASTM B209. Thickness: Minimum 1/16 inch. The front and back surfaces of the aluminum base metal shall be cleaned, deoxidized, and coated with a light, tightly adherent chromated conversion coating free of any powdery residue. The base metal pretreatment process shall be in conformance with ASTM B449, Section 5, Recommended Processing Methods. The coating weight shall be calms 2, with a median of 0.1025 oz/ft^2 as the optimum coating weight.

2.02 NON-ILLUMINATED SIGN PANELS

A. Aluminum Sign Panels:

1. Unless otherwise noted, fabricate sign panels from flat sheet aluminum sheeting conforming to ASTM B209, Alloy 6061-T6, not less than 1/8 inch thick.

2. The sign background shall be reflective sheeting conforming to Federal Specification L-S-300A. The reflective sheeting shall include a pre-coated pressure sensitive adhesive or a tack-free heat activated adhesive either of which shall be applied as specified by the sheeting manufacturer to commended, properly prepared flat surfaces without the necessity of additional adhesive coats on the reflective sheeting or application surface.

3. Application of all lettering, arrows, and other artwork shall be by photographic silk screen. No modification of typefaces or layout rules and the arrow/circle will be permitted without approval by the Engineer.

4. Sign Reflectivity – All signs must comply with the following standards

   a. The sign face shall have white 3M high intensity prismatic legend (or equal) reflective sheeting (ASTM Type III, IV, X) applied as a background.

   b. Lettering/graphics shall be one of the following:

      1) 3M Scotchlite Electrocut (letter cutting) or equal transparent cuttable film (1170 series) inverse cut to allow white reflective background to show through lettering.

      2) Screen printed using 3M 8801 series color translucent ink.

      3) Both processes (a or b) will accomplish a color field with white copy.

      4) The sign shall include a 3M series 1160 graffiti guard.

5. Street Name Signs on Signal Mast Arms or any aerially mounted signs.

   a. All sign hardware shall be aluminum and any moving parts shall be stainless steel.

   b. The sign mounting brackets shall be Sky Bracket with Sign Kit SB-SBK (or Equal).

   c. Various streets in the City change names at major intersections. Mast Arm Signs that designate different names shall be made with a 30 inch vertical blank by variable with suffix. The name of the roads to the right mounted shown as the street name on top. All legend shall be upper case 8” and lower case 6”.

   d. The sign mounting brackets shall be Sky Bracket with Sign Kit SB-SBK (or Equal).

   e. Various streets in the City change names at major intersections. Mast Arm

f. Signs that designate different names shall be made with a 30 inch vertical blank by variable with suffix.

g. The name of the roads to the right mounted shown as the street name on top.

h. All legends shall be upper case 8” and lower case 6”.

6. Corner Street Name signs shall be mounted on top of stop signs when appropriate; otherwise they can be mounted separately.

a. The U Channel bracket with minimum 12” blade shall be used and mounted on a new or existing square post. At least two holes shall be used to affix the bracket to the post and sign to bracket. A 5/16” x ¾” bolt shall be used to affix the bracket to the pole. There shall be at least two threaded holes for the set screws to affix the sign to the blade. These set screws shall be a 12 point 5/16-18 x ½” as distributed by Simi Fasteners (or Equal). For clarification and guidance, contact traffic operations.

b. The corresponding U channel bracket at the intersection shall be mounted with a one piece double bladed positioned perpendicular to each other. Each blade shall include two 5/16-18 threaded hole, spaced at 6inch centers, to accept a 5/16-18x1/2” 12 point faster as distributed by Simi Fasteners (or Equal). The top street name sign shall not show the any holes.

B. Fiberglass Reinforced Plastic Sign Panels:

1. Products: One of the following products and in compliance with the requirements specified herein: Fiber-Brite; Sequentia, "Polyplate"; Inteplast Group "InteCel" (0.5 inch for Post-Mounted CZ Signs, 48 inches or less), or equal.

2. Furnish fiberglass reinforced plastic panel sign in accordance with ASTM D3841. Panel: Acrylic modified and ultraviolet stabilized for outdoor weatherability. Plastic shall contain additives designed to suppress fire ignition and flame propagation. When tested in accordance with the requirements in the ASTM D635, the extent of burning shall not exceed one (1) inch.

3. Plastic shall be stabilized to prevent the release solvents and monomers. The front and back surfaces of the laminate shall be clean and free of constituents and releasing agents that can interfere with the bonding of retroreflective sheeting.

4. Panel shall be weather resistant Grade II thermoset polyester laminate.

5. Color of fiberglass reinforced plastic panels shall be uniform gray.

6. Panels shall be minimum 0.135-inch thick.

7. Tolerances: Finished fiberglass reinforced plastic panel signs shall be flat within a tolerance of ±1/32 inch per linear foot when measured across the plane of the sign in all directions. The finished signs shall have an overall tolerance within ±1/8 inch of the specified dimensions.

8. Fabrication: Cut fiberglass reinforced plastic panels from a single piece of laminate. Pre-drill all bolt holes. Fabricate true and smooth predrilled bolt holes, panel edges, and the front and back surfaces of the panels. The panel surfaces shall be free of visible cracks, pinholes, foreign inclusions, warping and wrinkles that can affect performance and serviceability.

2.03 TYPEFACE

A. Unless otherwise noted, typefaces shall be Helvetica medium with industry standard normal letter spacing.

B. Street Name Signs (Corner) – Shall have a 9” vertical dimension, length will vary based upon the street name; minimum 24” length to maximum 48” length in 6” increments. The legend shall be white Series “C” with minimum ½” spacing. If the street name sign exceeds the 48” maximum length, Series B lettering maybe used. Street name lettering shall be 6” upper case and 4-1/2” lower case and street suffix lettering shall be 3” uppercase. In cases where the length of the street name is too long for a 48” sign plate, lettering may be narrowed to fit with prior City approval. There shall be a ½” white border.

C. Place type and symbols as shown on the Contract Drawings. Bring any design conflict in the manufacture and fabrication of the signage to the attention of the Engineer before proceeding.

D. Platform signs as indicated in the architectural signage plan.

2.04 SIGN FRAMES

A. Fabricate required steel framing, sign back bracing and support posts in accordance with Caltrans Standard Specifications, Section 75, Miscellaneous Metal.

B. Hot-dip galvanize steel framing, mounting components, hardware and appurtenances after fabrication and touch up as specified in Caltrans Standard Specifications, Section 75, Miscellaneous Metal.

C. Frames for fiberglass sign panels: Extruded aluminum tubing conforming to the manufacturer's requirements for each sign type. Finish shall be satin anodized in color selected by the Engineer.

2.05 FASTENINGS AND ANCHORS

A. Unless otherwise noted, design a complete system of fastenings and anchorage devices for the various signs, as required for attachment to the various supporting structures.

B. Straps and Saddle Brackets: Stainless steel conforming to the requirements of ASTM A167, Type 302 or 304, for mounting sign panels on electroliers, sign structure posts, and where shown on the Contract Drawings.

C. Theft and vandal proof bolts: Stainless steel with a chromium content of at least 16 percent and a nickel content of at least 8 percent.

D. Lag Screws, Bolts (Except Theft-Proof Bolts), Metal Washers and Nuts: Commercial quality steel, hot dip galvanized after fabrication in accordance with Caltrans Standard Specifications, Section 75, Miscellaneous Metal. Fiber washers shall be of commercial quality.

E. Fastenings and anchors for fiberglass sign panels shall conform to the sign panel manufacturer's requirements for each sign type.

2.06 SIGN COLORS

A. Standard paint colors as manufactured by Dupont, or equal, and as follows:

Color	Imron{spray}	Dulux{brush}

Red	68209UM	93-58209H
Yellow	6808U	93-6808
White	617U	93-21667
Black	69	93-005

B. For fiberglass sign panels, as selected from manufacturer's color palette.

2.07 POSTS

A. Metal Posts: Metal posts shall be in accordance with Caltrans Standard Specifications, Section 56-2.02A, Metal Posts, with the following additional requirements:

1. Hot dip galvanize steel posts, mounting components, hardware and appurtenances after fabrication and touch up as specified in in Caltrans Standard Specifications Section 75 - 1.05, Galvanizing.

2. A break away system using Western Highway Ulti Mate with soil stabilizer shall be used as appropriate or equal.

B. Wood Posts: Wood posts shall be in accordance with Caltrans Standard Specifications, Section 56-2.02B, Wood Posts, with the following additional requirements:

1. Posts shall be 4 x 4 inches nominal size unless otherwise indicated on the Contract Drawings.

2. Preservative treat posts other than all heart redwood. Kiln dry prior to treatment

C. Aluminum Posts for Fiberglass Sign Panels: Extruded aluminum tubing conforming to the manufacturer's requirements for each sign type. Finish shall be satin anodized. Design posts to withstand 100 mile per hour wind loading.

D. Object Marker: Type K-1, conforming to the details shown on Caltrans Standard Plan A73A.

PART 3 - EXECUTION

3.01 SIGN INSTALLATION

A. Roadside signs shall be installed as specified in Section 56-2, Roadside Signs, of the Caltrans Standard Specifications, and these technical provisions, and as indicated on the Plans.

B. Install signs true, plumb, and level, where shown on the Contract Drawings. Do no field cutting of any sign work. Prevent bending and chipping signs. Exercise extreme care in all handling and stacking of signs to avoid bending or chipping. Replace chipped and bent sign panels. Exact locations of signs will be confirmed by the Engineer in the field.

C. Rigidly anchor work to the supporting construction, as shown on the approved shop drawings. Conceal fastenings, except those which anchor supporting members to structure. Fabricate and erect supporting members and securely attach to the various structures in accordance with Caltrans Standard Specifications, Section 75, Miscellaneous Metal.

D. Subsequent to erection, if required by the Engineer, exterior signs may be required to be covered until their actual use is required. Material used to temporarily cover any sign panel shall effectively conceal the message and be non-injurious to the panel, its finish, and its structural integrity.

3.02 POST INSTALLATION

A. Install posts in accordance with Caltrans Standard Specifications, Section 56-2.03, Construction, with the following additional requirements:

1. The remaining space around the post in the post holes shall be backfilled with concrete.

2. Dispose of surplus excavated material as specified in Section 31 00 00, Earthwork.

3. Repair any spalling, chipping or cracking of concrete structures. Obtain the Engineer's approval of repair method.

4. Unless otherwise noted, do not paint wood posts and blocks.

5. Touch-up galvanized metal as specified in Caltrans Standard Specifications Section 75 - 1.05, Galvanizing.

6. The line between the center of the top of a post and the center of a post at the ground line shall be plumb within a tolerance not to exceed 0.02-foot in 10 feet.

3.03 REMOVING, RELOCATING, REINSTALLING AND SALVAGING EXISTING SIGNS

A. Remove, relocate, and salvage existing signs in accordance with Section 02 41 00, Demolition, as augmented herein.

B. Remove and re-install existing signs in new locations as shown on the Contract Drawings. Provide all necessary components required for erecting the existing sign in its new location, including support framing, hardware, post, post holes and concrete. Obtain Engineer's inspection for defects and approval of signs to be relocated prior to re-installation.

C. Where existing Milepost signs at one-tenth mile intervals need to be removed to facilitate the Contractor's construction operations, remove and reinstall, or remove and replace with new signs. Relocate Milepost signs to a new location if the existing location changes due to new track alignment.

D. Salvaging of signs shall include removing, disassembling, preparing, marking, bundling, packaging, tagging, hauling and stockpiling. Signs to be salvaged shall not be removed until their use is no longer required as determined by the Engineer. Salvaged materials shall be cleaned of all foreign materials and pressed flat before delivery to the Engineer.

E. Existing posts, which support signs that are to be salvaged, shall become the property of the Contractor and shall be disposed of outside the work site.

F. Protection and cleanup requirements for the new signs shall apply to the existing signs once that have been reinstalled.

3.04 PROTECTION AND CLEANING

A. Protect and maintain completed sign panels in good condition, free from dirt, scratches, hand marks or other blemishe

B. Clean surfaces of sign work as recommended by the sign manufacturer after installation and keep in a condition satisfactory to the Engineer.

C. Remove and replace defective work, including that exhibiting cracked, chipped, scratched, abraded, or otherwise damaged finishes, with work conforming to the specified requirements.

3.05 DISSIMILAR MATERIALS

Separate aluminum surfaces in contact with or in close proximity to non- compatible metals or concrete with non-absorptive tape, coat of heavy-bodied bituminous paint, or zinc chromate primer.

PART 4 - MEASUREMENT AND PAYMENT

4.01 MEASUREMENT

A. Sign installation shall be measured for payment by each sign supplied and installed as shown on the plans or as directed by the Engineer.

B. Sign relocation shall be measured for payment by each sign removed and installed as shown on the plans or as directed by the Engineer.

C. Object marker installation shall be measured for payment by each object marker supplied and installed as shown on the plans or as directed by the Engineer.

4.02 PAYMENT

A. The contract unit price paid for each sign installation shall include full compensation for furnishing all labor, materials, tools, equipment and incidentals, and for doing all the work involved in traffic signing, completing in place, as shown on the plans or as directed by the Engineer.

B. The contract unit price paid for each sign relocation shall include full compensation for furnishing all labor, materials, tools, equipment and incidentals, and for doing all the work involved in traffic signing, completing in place, as shown on the plans or as directed by the Engineer.

C. The contract unit price paid for each object marker installation shall include full compensation for furnishing all labor, materials, tools, equipment and incidentals, and for doing all the work involved in installing object markers, complete in place, as shown on the plans or as directed by the Engineer.

END OF SECTION 10 14 53

THIS PAGE INTENTIONALLY LEFT BLANK

SECTION 129313

BICYCLE RACKS

PART 1 - GENERAL

1.1 SUMMARY

A. This Product is a commercially, readily available project
   1. Gate style
   2. Steel or metal pipe (non-aluminum)
   3. Up to 20 stalls each unit
   4. Select locally or regionally fabricated products wherever possible.

1.2 SUBMITTALS

A. General: Submit in accordance with Caltrans Standard Specifications, Section 5, Control of Work.

B. Manufacturer product cut sheets: Submit product cut sheets. Indicate details necessary for complete fabrication, parts connection and installation, including size, and other necessary information.
   1. Furnish manufacturer name and location data for the following materials. Provide separate data for each different manufacturer used:
      a. Bicycle Racks.

1.3 COORDINATION

A. Coordinate with other sections of Specifications to ensure proper scheduling for delivery and installation of Work and to ensure that proper provisions are made for installation of work specified.

PART 2 - PRODUCTS

2.1 BICYCLE RACKS

A. Type: Metal
   1. Modular bicycle storage rack
   2. Allows one wheel to be locked per bicycle
   3. Each unit may accommodate 10-20 bicycles slots
   4. Tubular galv. steel frame
   5. Single or double side access
   6. Acceptable Products:
      a. Creative Pipe Inc.
         PO Box 2458 Rancho Mirage, CA 92270
         Creativepipe.com
      b. Park It Bike Racks
         ParknPool
         40 Park Place, Lexington, VA 24450
      c. FS Industries
         FS Industries.com
         PO Box 72659
         Providence, RE 02907
         800-421-0314

2.2 FABRICATION

A. Fabricate units from continuous pipe without splices

B. Bends:
   1. Bend rails in jigs.
   2. Do not damage or distort pipe and maintain cylindrical cross-section of pipe maintained throughout bend.

3. Form bends free from buckles and twists, with finished surfaces smooth.

PART 3 - EXECUTION

3.1 PREPARATION

A. Coordinate drawings, diagrams, templates, instructions, and directions for installation.

3.2 INSTALLATION

A. Install in accordance with manufacturer's recommendation.

B. Install bicycle racks at locations indicated on Drawings.

C. Install racks in straight line, plumb, and level.

3.3 PROTECTION

A. Protect bicycle racks from damage and defacement until final acceptance. Replace damaged or defaced bicycle racks with new units prior to final acceptance.

END OF SECTION

SECTION 130000

SITE SEATING – WOOD SPOOLS

PART 1 - GENERAL

1.1 SUMMARY

A. This Product is a custom design-build item
   1. (10) Wood spools provided by Owner, and manufactured by others
   2. Design-build product shall include seat and back

1.2 SUBMITTALS

A. General: Submit in accordance with Caltrans Standard Specifications, Section 5, Control of Work.

B. Product Shop Drawings: Submit custom design and fabrication (build) shop drawings for review and approval; indicate details necessary for complete fabrication and installation, including dimensions, connections of parts, and other necessary information to demonstrate product integrity, stability and safety.

C. Furnish manufacturer name and location data for the following materials. Provide separate data for each different manufacturer used:
   - Wood Spool Seating

1.3 COORDINATION

A. Coordinate with other sections of Specifications to ensure proper scheduling for delivery and installation of Work and to ensure that proper provisions are made for installation of work specified.

PART 2 - PRODUCTS

2.1 SITE SEATING

A. Wood Spools
   1. (10) Individual Units
   2. Each unit shall accommodate weight for 1 adult person
   3. Non- rolling, no permanent fastening to site surfaces
   4. All exposed edges shall be sanded
   5. Color: unpainted (except for construction touch up finishing and seating)
   6. Acceptable products from:
      a. Walter Craven, Blank and Cables, Inc., www.blank&cables.com, CA Lic 900628
      b. Paul Disco, Joinery Structures, 2500 Kirkham St., Oakland, CA 94607 (510.251.8889)
      c. Brandan Adams, BaDesign, 1601 32nd St., Oakland, CA 94608 (510.444.2922)

2.2 FABRICATION

A. Fabricate units from wood

B. Seating:
   1. Shall be sanded, smooth surfaces and edges
   2. New or recycled wood color shall stain to match outer wood frame
   3. Designer/manufacturer name plate may be attached, and as approved by Engineer

PART 3 - EXECUTION

3.1 PREPARATION

A. Coordinate shop drawings, diagrams, templates, instructions, and directions for installation.

3.2 INSTALLATION

A. Deliver and install in accordance shop drawing and as per Owner.

END OF SECTION

SECTION 205016

UNDERGROUND DUCTWORK AND STRUCTURES FOR FACILITY SERVICES

PART 1 - GENERAL

1.01 SECTION INCLUDES

A. Reinforcement steel for ductworks

B. Conduit

C. Pre-cast concrete structures

D. Cast-in-place concrete ductbank and structures

E. Frames, covers, gratings, steps and sumps

F. Cover identification

1.02 MEASUREMENT AND PAYMENT

A. General: Underground ductwork and structures, as specified herein, will not be measured separately for payment but will be paid for as part of the Contract lump sum price for the related item of work in the Bid Schedule of the Bid Form.

1.03 REFERENCES

A. American Society for Testing and Materials (ASTM):

1. ASTM C33 Specification for Concrete Aggregates

2. ASTM F512 Specification for Smooth-Wall Poly Vinyl Chloride (PVC) Conduit and Fittings for Underground Installation

1.04 REGULATORY REQUIREMENTS

A. California Code of Regulations, Title 24, Part 3, California Electrical Code

B. State of California Public Utilities Commission (Cal. PUC):

1. Cal. PUC G.O. 128 Rules for Construction of Underground Electric Supply and Communications Systems

1.05 SUBMITTALS

A. General: Refer to California Department of Transportation (Caltrans), Standard Specifications (2010), Section 5, Control of Work, for submittal requirements and procedures.

B. Shop Drawings:

1. Submit Shop Drawings for fabrication and installation of pre-cast concrete structures, cast-in-place concrete structures, and concrete-encased underground ductwork, including the following:

   a. Excavation and shoring plans with required structural calculations;

   b. Cast-in-place and pre-cast detailed steel reinforcement drawings; and

   c. Cast-in-place and pre-cast manufacturer's concrete mix designs for structures and colored concrete as indicated.

2. Shop drawing information may be combined on a single drawing if clarity is not thereby impaired.

3. Shop Drawings shall fully demonstrate that the work to be performed and the materials to be provided comply with the provisions of these Specifications.

C. Product Data: Submit the following:

1. Complete materials list of items proposed to be furnished and installed under this Section.

2. Manufacturers' specifications and other data required to demonstrate compliance with these Specifications.

3. Catalog cuts for the following products:

   a. Conduits.

   b. Underground duct system, including manholes, pull boxes, handholes, cable junction boxes, and termination boxes.

   c. Manhole, pull box, and handhole covers and frames.

   d. Related miscellaneous hardware and metal items for cable trenches and wireways.

   e. Trench and wireway covers including composition of FRP materials, divider partition panels, method of joining sections, expansion joint mounting, and support details.

D. Certificates of Compliance: Provide for all specified products.

1.06 QUALITY ASSURANCE

A. Regulatory Requirements: Comply with the California Electrical Code, and Cal. PUC General Order No. 128. In case of conflict between the California Electrical Code and Cal. PUC G.O. 128, the provisions of Cal. PUC G.O. No. 128 shall govern.

B. Qualification of Manufacturers:

1. Manufacturers of the products specified for work under this Section shall be in the business of manufacturing similar products and shall be able to provide a history of successful production of the specified products.

2. Submit a list of five major projects, where similar products have been supplied, which have been in satisfactory use or operation for the past five years.

C. Notifications and Inspection: Completed facilities shall be approved by the Engineer before installation of cable and equipment. Corrective work required to obtain approval of underground construction and ductwork shall be performed at no additional cost to the District.

1.08 SITE CONDITIONS

A. Before beginning construction or installation of a section of underground conduit or ductwork, verify that the site is in suitable condition for installing such conduit or ductwork as indicated.

B. During non-work hours and at locations where installation of conduits and ducts is temporarily suspended or terminated, close ends of ducts with caps or plugs fitted to prevent entry of water or debris. Use caps or plugs designed for that purpose by the conduit manufacturer.

PART 2 - PRODUCTS

2.01 MATERIALS

A. Reinforcement Steel for Ductbanks:

1. Provide longitudinal reinforcing steel with a minimum total cross sectional area of 0.0018 times the gross area of the ductbank. Maximum spacing of reinforcement bars shall be 18 inches; minimum of one bar in each corner of ductbank.

2. Provide steel tie bars in the transverse direction enclosing the longitudinal bars; minimum size of No. 3 bars; minimum spacing of 12 inches. Minimum clear concrete cover over reinforcement steel shall be 3 inches where concrete is cast directly against earth, and 1.5 inches where concrete is cast directly against formwork.

3. Where ductbank enters rigid underground structures, provide reinforcing steel to tie the ductbank to the structure. Provide details indicating method employed to prevent differential settlement from damaging ductbanks.

B. Conduit: Conform with ASTM F512. Provide PVC conduit, minimum Schedule 40, and all necessary fittings in sizes as indicated. Provide flared bell ends on conduits and ducts entering manholes, handholes, and pull boxes.

C. Pre-cast Concrete: Provide pre-cast concrete structures in accordance with requirements of Section 33 05 16 - Utility Structures, and as indicated.

1. Pre-cast concrete electrical boxes, pull boxes, ground rod boxes, manholes, handholes, and vaults shall be provided as indicated. Concrete reinforcement shall be that which is regularly provided in standard products of the manufacturer. Standard manufactured structures that meet project requirements will be acceptable. Provide concrete inserts for mounting cable support brackets as indicated.

2. Pull box tops shall be flush with sidewalks or curbs or placed 1-1/2 inches above surrounding grades when remote from curbed roadways or sidewalks. Covers shall be provided with two lifting eyes and two hold-down bolts. Each box shall have a suitable opening for a ground rod, and a drainage opening.

D. Sand: Sand for filler material, where indicated, and for bedding of conduit in utility trenches shall be a clean and graded, washed sand, all passing a No. 4 U.S. sieve, and conforming generally to ASTM C33 for fine aggregate.

E. Cast-In-Place Concrete for Ductbank Encasements, Manholes, Pull Boxes, and Vaults:

1. Concrete shall be Class 3000 in accordance with Section 03 05 15 - Portland Cement Concrete, for ductbank encasements, manholes, pull boxes, and vaults. Concrete for ductbank encasements shall be colored red as specified in Section 03 05 15 - Portland Cement Concrete.

2. Formwork and concrete placement shall conform with applicable requirements of Section 03 11 00 - Concrete Forming, and Section 03 30 00 - Cast-in-Place Concrete.

3. Reinforcing steel, as indicated, shall conform with applicable requirements of Section 03 20 00 - Concrete Reinforcing.

F. Frames, Covers, Gratings, Steps and Sumps: Provide as indicated and in accordance with Section 33 05 16 - Utility Structures.

G. Cover Identification: Provide covers with embossed or engraved identification as indicated and as specified in Section 33 05 16 - Utility Structures.

PART 3 - EXECUTION

3.01 EXCAVATION, TRENCHING AND BACKFILLING

A. Perform excavation, bedding, and backfilling for underground conduits and structures in accordance with Section 33 05 28 - Trenching and Backfilling for Utilities, and as indicated.

3.02 INSTALLATION

A. Underground Duct System: Install as indicated. Conduit, pull boxes, and manholes shall be located as indicated. Comply with applicable requirements of Cal. PUC G.O. 128.

B. Ducts:

1. Inspect ducts and couplings to ensure that only clean and undamaged pieces are incorporated in the work.

2. Ductbanks or conduits shall interface with building construction 5 feet outside of the building and shall have a minimum slope of 3 inches to each 100 feet away from buildings and towards manholes, pull boxes, and handholes, and shall run in straight lines between indicated changes in direction.

3. Individual conduits that are grouped together to form a ductbank shall conform to the standards and requirements specified herein.

4. Horizontal or vertical changes in direction exceeding ten degrees shall be accomplished by long sweep bends having a minimum radius of curvature of 25 feet, except that manufactured bends may be used at ends of short runs of 100 feet or less, and then only at or within 5 feet of the end of the run. Sweep bends may be made up of curved or straight sections, or combinations thereof. Manufactured bends shall have a minimum radius of 36 inches for ducts of 3 inches in diameter and larger.

5. Conduits shall terminate in end-bells where duct lines enter vaults.

6. Spacers or space separators shall be placed not more than 6 feet apart, and shall transmit no vertical load to the conduit.

7. Install ducts, joints, and space separators according to manufacturer's printed instructions and recommendations.

8. During construction, partially completed duct lines shall be protected from the entrance of debris by means of suitable caps or plugs. As each section of a duct line is completed between manholes, handholes, or pull boxes, a testing mandrel not more than 1/4 inch less than the size of the conduit shall be drawn through each conduit, after which a brush with stiff bristles shall be drawn through until the conduit is clear of particles of earth, sand, or gravel. Conduit caps or plugs shall then be immediately installed.

9. Construct the concrete-encased ductbank with 3 inch minimum cover on all sides. The concrete used for the ductbank shall be integrally colored with a red mineral coloring pigment as specified in Section 03 05 15 - Portland Cement Concrete.

10. Install 1/8 inch or larger diameter polypropylene pulling cord in ducts including innerducts. Fasten each cord to pull iron anchorage in pull box, manhole, or vault with 2 feet minimum slack.

11. Innerduct placement in communications conduits shall be performed to avoid excessive tension and deformation of the innerduct. Damaged or necked down innerduct shall be replaced. Conform with the manufacturer's installation instructions.

12. Provide metallic numbering tags indicating the conduit number on both ends of all conduit runs.

C. Pre-cast Concrete Structures: Install pre-cast electrical boxes, pull boxes, handholes, manholes, and vaults as indicated. Boxes shall be placed on 4 inches of compacted sand bedding. Manholes shall be placed on 6 inches of compacted aggregate base as specified in Section 32 11 24 - Aggregate Drainage Layer. Conduit, cable, ground rod entrances, and unused openings shall be sealed with cement mortar.

D. Cast-In-Place Concrete Structures:

1. The location of each pull box, manhole, and vault shall be approved by the Engineer before construction of such structure is started. Top, walls, and bottom shall consist of reinforced concrete. Walls and bottom shall be of monolithic concrete construction.

2. Place concrete for pull boxes, manholes, and vaults on well-compacted soil with a minimum of 6 inches of aggregate base as specified in Section 32 11 24 - Aggregate Drainage Layer. Seal all sumps. Frames and covers shall be of gray cast iron. A machine-finished seat shall be provided to ensure a matching joint between the frame and cover.

3. Where duct lines enter pull boxes, manholes, and vaults, the sections of duct may be either cast in the concrete or may enter through a square or rectangular opening of suitable dimensions provided in the utility structure. A cable-pulling iron anchorage shall be installed in the wall opposite each ductbank entrance.

END OF SECTION 20 50 16

SECTION 224713

OUTDOOR DRINKING FOUNTAIN

PART 1 - GENERAL

1.1 SUMMARY

A. This Project is a standard manufactured product and commercially available
   1. Outdoor
   2. Barrier free
   3. Single station faucet
   4. Non-refrigerated
   5. Push button
   6. Steel pedestal
   7. Select locally or regionally fabricated products wherever possible.
   8. Metal and steel components (non aluminum)

1.2 SUBMITTALS

A. General: Submit in accordance with Caltrans Standard Specifications, Section 5, Control of Work.

B. Product manufactured cut sheet: Submit manufacturer product cut sheets, indicate details necessary for complete fabrication and installation, including model number, connections of parts, and other necessary information.

C. Furnish manufacturer name and location data for the following materials. Provide separate data for each different manufacturer used:
   - Drinking Fountain

1.3 COORDINATION

A. Coordinate with other sections of Specifications to ensure proper scheduling for delivery and installation of Work and to ensure that proper provisions are made for installation of work specified.

PART 2 - PRODUCTS

2.1 DRINKING FOUNTAIN

A.
   1. Outdoor
   2. Accessible
   3. Pedestal side arm mounted single faucet
   4. Steel frame and powder coat finish
   5. Color: as per Owner
   6. Acceptable Products:
      a. Haws
         Model 33776
      b. Halsey Taylor
         Model 4410
      c. Kay Park Recreation
         Model KP47SHF

2.2 FABRICATION

PART 3 - EXECUTION

3.1 PREPARATION

A. Coordinate drawings, diagrams, templates, instructions, and directions for installation and operation.

B. Clean sleeves of debris

C. Connect plumbing to existing potable water and drainage stub outs

3.2 INSTALLATION

A. Install in accordance with Health and Safety standards.

B. Install drinking fountain at location indicated on Drawings.

C. Provide a minimum 44” clearance from face of building

3.3 PROTECTION

A. Protect drinking fountain from damage and defacement until final acceptance. Replace damaged or defaced fountain with new unit prior to final acceptance.

END OF SECTION

SECTION 310000

EARTHWORK

PART 1 - GENERAL

1.01 SECTION INCLUDES:

A. Staking and grades

B. Existing utilities

C. Earthwork general requirements

D. Subsurface extraction

E. Rough grading and filling

F. Excavation

G. Embankment construction

H. Subgrade preparation

I. Foundation preparation

J. Subgrade filling/raising grade

K. Compaction

L. Backfilling

M. Finish grading

N. Field quality control

1.02 RELATED SECTIONS

A. Section 02 41 00, Demolition

B. Section 32 11 23, Aggregate Base Course

C. Section 33 05 28, Trenching and Backfilling for Utilities

1.03 REFERENCES

A. American Society for Testing and Materials (ASTM):

1. ASTM C131 Test Method for Resistance to Degradation of Small-Size Coarse Aggregate by Abrasion and Impact in the Los Angeles Machine

2. ASTM C136 Test Method for Sieve Analysis of Fine and Coarse Aggregates

3. ASTM C535 Test Method for Resistance to Degradation of Large-Size Coarse Aggregate by Abrasion and Impact in the Los Angeles Machine

4. ASTM D422 Method for Particle-Size Analysis of Soils

5. ASTN D653 Terminology Related to Soil, Rods, and Contained Fluids

6. ASTM D1140 Test Method for Amount of Material in Soils Finer Than the 200 (75-um) Sieve

7. ASTM D1557 Test Methods for Moisture-Density Relations of Soils and Soil-Aggregate Mixtures Using 10-lb (4.54-kg) Rammer and 18-in. (457-mm) Drop

8. ASTM D2216 Test Method for Laboratory Determination of Water (Moisture) Content of Soil, Rock, and Soil-Aggregate Mixtures.

9. ASTM D2487 Test Method for Classification of Soils for Engineering Purposes

10. ASTM D2922 Test Methods for Density of Soil and Soil-Aggregate in Place by Nuclear Methods (Shallow Depth)

11. ASTM D2974 Test Method for Moisture, Ash, and Organic Matter of Peat and Other Organic Materials

12. ASTM D3017 Test Method for Moisture Content of Soil and Soil-Aggregate in Place by Nuclear Methods (Shallow Depth)

13. ASTM D4253 Test Methods for Maximum Index Density of Soils Using a Vibratory Table

14. ASTM D4254 Test Methods for Minimum Index Density of Soils and Calculation of Relative Density

15. ASTM D4318 Test Method for Liquid Limit, Plastic Limit, and Plasticity Index of Soils

B. State of California, Department of Transportation (Caltrans), Standard Test Methods:

1. Calif. Test 217 Method of Test for Sand Equivalent

1.04 DEFINITIONS

A. Earthwork Terminology: Terms used in this Section and not defined herein shall be interpreted in accordance with the definitions given in ASTM D653.

B. Soil Classification: Soil classification is based on the Unified Soil Classification system given in ASTM D2487. Group symbols, when used, conform with the symbols of ASTM D2487.

C. Fill: Soil or soil-rock material placed to raise the subgrade or natural grade of the site.

D. Backfill: Soil or soil-rock material used to backfill excavations and to backfill excavated spaces around foundation walls, building walls, retaining walls, head walls, and abutments.

E. Embankment: Soil or soil-rock material for embankment construction. Embankment construction includes constructing embankments and dikes, including the preparation of the areas upon which they are to be placed; and the construction of temporary surcharge embankment above the grading plane.

F. Borrow: Soil or soil-rock material used for fill, backfill, embankment, or other construction that is excavated from an off-site location and hauled in.

G. Unsuitable Material: Excavated material or material below the natural ground surface in embankment areas or below sub grade elevation in excavated areas, which is unsuitable for its planned use. Unsuitable material is further defined as material determined to be:

1. Of such unstable nature as to be incapable of being compacted to specified density using ordinary methods at optimum moisture content; or

2. Too wet to be properly compacted and circumstances prevent suitable drying prior to incorporation into the work; or

3. Otherwise unsuitable for the planned use.

The presence of excessive moisture in a material is not, by itself, sufficient cause for determining that the material is unsuitable. The existence of unsuitable material may be indicated in the Contract Documents or may be determined by the Engineer during the progress of the work.

H. Relative Compaction: The ratio, expressed as a percentage, of the in-place dry density of material as compacted in the field to the maximum dry density of the same material as determined by laboratory test ASTM D1557.

I. Optimum Moisture Content: The water content at which a soil can be compacted to a maximum dry unit weight by a given compactive effort.

J. Relative Density: Mass per unit volume as specified in ASTM D4253 and ASTM D4254, as applicable to the soil and test method employed.

1.05 CLASSIFICATION OF EARTHWORK

A. For specification purposes, earthwork shall be classified as follows:

1. Excavation-Common: All excavation involved in grading and construction of the trackway, parking areas, landscaped areas, walkways, roads, driveways, and connections thereto; and any other excavation classified or indicated as common excavation. Demolition of the existing concrete and asphalt concrete pavements within the excavation-common prism will be paid separately as indicated elsewhere in this technical specification.

2. Structure Excavation: The removal of material for the construction of foundations for aerial structures, bridges, buildings, retaining walls, headwalls, cut-and-cover subways, and other structures, and such other excavation indicated as structure excavation.

3. Structure Backfill: Structure backfill includes furnishing structural fill material, and placing and compacting structural fill material around structures to the lines and grades indicated. Structure backfill includes borrow excavation and material when required.

4. Pervious Backfill: Includes furnishing, placing, and compacting pervious backfill material behind abutments, wingwalls, and retaining walls, as indicated.

5. Common Embankment: Used only for embankment construction, above surrounding grade, below 2.5 feet of the finished embankment grade or sub grade, and where there are no foundation-bearing concrete structures above. Common embankment includes borrow excavation material when required.

6. Select Embankment: Used only for embankment construction, above surrounding grade, within 2.5 feet of the finished embankment grade or sub grade. Select embankment includes borrow excavation material when required.

7. Subsurface Extraction: Includes removal of abandoned utilities, tanks, walls, foundations, and other miscellaneous subsurface man-made structures that interfere with new construction and are designated to be removed, and the cleaning of such items if they are

indicated to be salvaged. Removal of such obstructions at or above grade is specified in Section 02 41 00, Demolition.

8. Salvaging Topsoil: Salvaging topsoil is the removal of topsoil to the depth indicated, stockpiling the material on-site, and maintaining the stockpile until the material is reused in the work. Salvaging of topsoil shall be classified the same as the excavation with which it is associated, but if no such classification can be made, it shall be classified as Excavation - Common.

1.06 DESCRIPTION

A. Provide excavation for pavement; excavation and placement of compacted fill and backfill for structures, subsurface and surface drainage; placement of pervious backfill; construction of embankments; sub grade and foundation preparation; subsurface extraction of miscellaneous structures and facilities indicated or required to be removed; and finish grading.

1.07 SUBMITTALS

A. General: Refer to California Department of Transportation (Caltrans), Standard Specifications (2010), Section 5, Control of Work for submittal requirements and procedures.

B. Quality Plan: California Department of Transportation (Caltrans), Standard Specifications (2010), Section 11, Quality Control and Assurance general requirements. The Quality Plan shall include a schedule of all tests specified to be performed by the Contractor.

C. Test Reports: Submit certified test reports of all tests specified to be performed by the Contractor. Test reports shall be sealed and signed by a California registered geotechnical engineer when required to meet requirements of the California Building Code, Chapter 33, and Appendix Chapter 33, and Structural Chapters 18 and 18A.

D. Samples: Furnish and deliver samples of fill and backfill materials as selected by the Engineer for testing and analysis.

E. Delivery Tickets: Submit a delivery ticket with each load of imported borrow material delivered to the site, stating the type of fill material and the quantity.

F. Field Verification for In-Situ Treatment: Submit the proposed program for field verification of Standard Penetration Test "N" Values after in-situ treatment for mitigation of liquefaction potential.

1.08 REGULATORY REQUIREMENTS

A. Regulatory requirements that govern the work of this Section include the following governing codes:

1. California Code of Regulations, Title 8, Chapter 4, Subchapter 4 — Construction Safety Orders, and Subchapter 19 — Trench Construction Safety Orders.

2. California Code of Regulations, Title 24, Part 2, California Building Code, Chapter 33 and Appendix Chapter 33, and Structural Chapters 18 and 18A.

1.09 QUALITY CONTROL

A. Quality Plan: The Contractor shall submit a Quality Plan, conforming to the requirements of California Department of Transportation (Caltrans), Standard Specifications (2010), Section 11, Quality Control and Assurance, covering all earthwork operations and the field quality control to be performed by the Contractor.

B. Quality Control: The Contractor shall provide proper quality control measures to assure compliance with specified requirements. Foundation and sub grade preparation and the placement and compaction of fills shall be performed under the surveillance of a California registered geotechnical engineer employed by the Contractor, as required to comply with the California Building Code, Chapter 33 and Appendix Chapter 33 and Chapters 18 and 18A.

C. Tests: The Contractor shall engage the services of an approved independent soils testing laboratory to perform tests.

D. Tolerances:

1. Construct finished surfaces to plus or minus 1/2-inch of the elevations indicated.

2. Complete embankment slopes to plus or minus 6 inches of the slope line indicated. Do not encroach on the trackway bed or roadbed.

3. Maintain the moisture content of fill material as it is being placed within plus or minus two percent of the recommended moisture content of the material.

1.10 SITE CONDITIONS

A. Unfavorable Weather Conditions:

1. Excavating, filling, backfilling, and grading work shall not be performed during weather conditions which might damage or be detrimental to the condition of existing ground, in-progress work, or completed work. When the work is interrupted by rain, excavating, filling, backfilling, and grading work shall not resume until the site and soil condition (moisture content) are suitable for compaction.

2. Sub grade shall be free from mud, snow, ice, and deleterious material when work is resumed.

3. Soil material that is too wet for compaction shall be left to drain, to be aerated and dried by disking and harrowing or other approved methods until the moisture content of the area is uniform and within the specified limits.

B. Prevention of Erosion: Comply with requirements specified in California Department of Transportation (Caltrans), Standard Specifications (2010), Section 13, Water Pollution Control, and the following:

1. Prevent erosion of stockpiles, ditches, embankments, filled, backfilled, and graded areas until such time as permanent drainage and erosion control measures have been installed.

2. Perform "protective grading" to provide positive drainage and to minimize ponding of surface water.

PART 2 - PRODUCTS

2.01 FILL AND BACKFILL MATERIALS - GENERAL REQUIREMENTS

A. Material used for fill, backfill, and embankment construction shall be an inert, inorganic soil, free from deleterious substances and of such quality that it will compact thoroughly without the presence of voids when watered and rolled. (Inorganic soil is defined as soil containing less than two percent by weight of organic material when tested in accordance with ASTM D2974.

Excavated on-site material will be considered suitable for fill, backfill, and embankment construction if it is free from organic matter and other deleterious substances and conforms to the requirements specified herein.

B. Excavated material that is suitable for fill, backfill, and embankment construction shall be conditioned for reuse and properly stockpiled for later filling and backfilling operations. Conditioning shall consist of spreading material in layers not to exceed 8 inches and raking free of debris and rubble. Rocks exceeding 6 inches in largest dimension and deleterious material shall be removed from the site and disposed of as specified herein under Article 3.03G, Disposal of Surplus Material.

C. Where conditions require the importing of fill or backfill material, the material shall be an inert soil or soil-rock material free of organic matter and meeting or exceeding the minimum requirements specified herein for the location.

D. All material to be used for filling, backfilling, and embankment construction requires written approval of the Engineer.

2.02 FILL AND BACKFILL MATERIALS - SPECIFIC REQUIREMENTS

A. Common Fill: Well-to moderately well-graded soils consisting of sands, silts, and clays, with or without gravel, as excavated, screened or blended, having the following mechanical properties and gradation:

1. Gradation (ASTM D422):

Sieve Opening	**Percent Passing, by Weight**	
6-inch square	100	
3/4-inch square	70	minimum

2. Liquid Limit (ASTM D4318): 50 maximum

3. Plasticity Index (ASTM D4318): 25 maximum

B. Common Embankment: Common fill, with the following additional requirements:

1. Liquid Limit (ASTM D4318): 40 maximum

2. Plasticity Index (ASTM D4318): 15 maximum

C. Select Embankment: Well-to moderately-graded soils consisting of sands, silts, and clays, with or without gravel, as excavated, screened or blended, having the following mechanical properties and gradation:

1. Gradation (ASTM D422):

Sieve Opening	**Percent Passing, by Weight**	
1 inch square	100	
3/8 inch square	75	minimum
U.S. No. 4	20	minimum
U.S. No. 200	35	maximum

2. Sand Equivalent (Calif. Test 217): 10 minimum

3. Plasticity Index (ASTM D4318): 10 maximum

2.03 SOURCE QUALITY CONTROL

A. Fill, backfill, and embankment materials proposed to be used in the work shall be tested in the laboratory for compliance with specified requirements as follows:

1. Moisture-Density Relationship: ASTM D1557.

2. Moisture Content: ASTM D2216.

3. Liquid Limit: ASTM D4318.

4. Plastic Limit and Plasticity Index: ASTM D4318.

5. Percentage of Wear: ASTM C131 or C535 as applicable.

6. Sieve Analysis: ASTM D422, and ASTM C136, as applicable.

7. Percent Passing No. 200 sieve: ASTM D1140.

8. Sand Equivalent: California Test 217.

9. Organic Content of Soils: ASTM D2974.

B. Where classification of soils is necessary to meet specified requirements, perform laboratory tests in accordance with ASTM D2487.

C. Submit certified test reports of all tests as herein specified under Submittals.

D. Provide samples as requested by the Engineer for preparing checklists. Provide three samples of each type of material proposed for use from locations selected by the Engineer.

PART 3 - EXECUTION

3.01 STAKING AND GRADES

A. Lay out the work, establish all necessary markers, bench marks, grading stakes, and other stakes as required, in accordance with the requirements specified in California Department of Transportation (Caltrans), Standard Specifications (2010).

3.02 EXISTING UTILITIES

A. Verify on site the location and depth (elevation) of all existing utilities and services before performing any excavation work. Refer to Section 33 05 25, Support and Protection of Utilities, for additional requirements. Excavation within 3 feet of an active utility line shall be performed by hand.

B. Abandoned sewers, piping, and other utilities encountered in the progress of the excavating shall be removed and the ends plugged.

C. Active utility lines encountered, which are not indicated in the Contract Documents, shall be reported immediately to the Engineer and utility owners involved. The Engineer and utility owners shall be permitted free access to determine the measures deemed necessary to repair, relocate, or remove the utility.

D Abandoned existing utilities to be removed prior to DSM wall construction, shall be backfilled as indicated in the Contract Plans.

3.03 EARTHWORK GENERAL REQUIREMENTS

A. Dust Control: Refer to Section 01 57 00, Temporary Controls, for dust control requirements.

B. Erosion Protection: Prevent erosion of the site at all times. Construct temporary berms and dikes and cut temporary swales to promote natural drainage of site. Refer to California Department of Transportation (Caltrans), Standard Specifications (2010), Section 13, Water Pollution Control l, for additional requirements.

C. Construction Traffic: Disperse travel paths of traffic and construction equipment over entire width of compacted surfaces so as to aid in obtaining uniform compaction. Protect exposed soil layers with high moisture content from excessive wheel loads.

D. On-Site Excavation or Borrow Pits: Do not excavate or remove any material from the project site or right-of-way which is not within the designated excavation, as indicated by the slope and grade lines, without written authorization from the Engineer.

E. Salvaging Topsoil:

1. Salvage topsoil from stripped and excavated areas, and stockpile on the site at appropriate locations. Prevent topsoil from contamination by other materials, and provide adequate drainage and erosion protection.

2. Place stockpiled topsoil in areas to be landscaped as indicated on the Contract Drawings.

F. Stockpiling of Fill and Backfill Material:

1. Excavate and separately stockpile suitable fill and backfill material, as indicated, during the progress of the excavation work. Save sufficient suitable excavated material, if available, for later filling, backfilling, and embankment construction.

2. Store materials from required excavations that are suitable for fill, backfill, and embankment as excavated, in stockpiles segregated by type.

3. Establish excavated material stockpiles on site only in locations where they will not interfere with the progress of the work. Offsite stockpiling, if necessary, shall be the responsibility of the Contractor.

G. Disposal of Surplus Material:

1. Excess earth materials, unsuitable materials, and debris shall become the property of the Contractor and shall be removed from the site and disposed of in a legal manner.

2. Location of disposal site and length of haul shall be the Contractor's responsibility.

H. Maintenance of Excavations, Slopes, and Embankments:

1. Excavate and remove material outside the limits of the excavation which is unstable and constitutes potential slides, and material which comes into excavations for any reason including from the driving of piles.

2. Maintain slopes and embankments until acceptance of the work. Promptly repair slides, slipouts, washouts, settlements, and subsidences that occur for any reason, and refinish the slope or embankment to the indicated lines and grades.

D. Safeguarding of Structure Walls: Heavy equipment and rollers greater than one ton shall not be operated within 4 feet of structure walls.

3.04 SUBSURFACE EXTRACTION

A. Remove subsurface facilities and obstructions to the extent indicated.

B. When subsurface facilities are encountered during excavations which interfere with new construction, and such facilities are not indicated, notify the Engineer promptly for corrective determination.

3.05 ROUGH GRADING AND FILLING

A. Prior to commencement of earthwork, perform such soil and rock removal and filling as may be required to facilitate the progress of the work and bring all elevations to the rough grading lines indicated on the Contract Drawings. Grading shall be performed by blading or as herein specified under Article 3.08, Subgrade Preparation.

B. Fill or backfill, test pits, or holes which will not be completely removed by excavation, with lean concrete, pervious backfill, or clean structural fill, and compact as herein specified in layers not exceeding 8 inches in uncompacted thickness.

C. Fill or backfill holes, swales, and low points that will not otherwise be removed in the course of the work to the indicated grades.

3.06 EXCAVATION

A. General Excavation Requirements:

1. Perform excavating as indicated and required for trackway and roadway beds, for concrete footings, foundations, retaining walls, exterior paving, floor slabs, concrete walks, and for site levels and grading, and provide shoring, bracing, underpinning, cribbing, pumping, and planking as required.

2. Comply with applicable requirements of CCR, Title 8, Trench Construction Safety Orders.

3. The bottoms of excavations shall be level, firm, undisturbed earth, clean and free from loose material, debris, and foreign matter.

4. Excavate to the lines and grades indicated on the Contract Drawings.

5. Excavations shall be supported and maintained by providing structural support of earth walls as specified in Section 31 50 00, Excavation Support and Protection, so that sides are stable and will not move. Excavations may be maintained by sloping cut faces where space permits, if calculations sealed and signed by a civil or structural engineer currently registered in the State of California, show that the slopes are safe. Calculations shall consider all existing conditions, including adjacent traffic, construction loading, and other local effects.

6. Limits of excavations shall allow for adequate working space for installing forms, wall waterproofing, and as required for safety of personnel. Cut excavations in solid rock accurately to the lines indicated on the Contract Drawings, or to the width of the ductbank or concrete encasement.

7. Dewater excavation as specified in California Department of Transportation (Caltrans), Standard Specifications (2010), Section 13, Water Pollution Control. Construct berms around excavations as required to prevent surface water and runoff from entering the excavation.

8. Remove unstable bottom material. Remove large stones, debris, and compressible soils from excavation bottoms to a minimum depth of 12 inches. Where required to excavate to rock, it shall be understood to mean sound bedrock. Remove loose and unsound material.

9. Except as otherwise indicated, preserve the material below and beyond the lines of excavations. Where an excavation is carried below the indicated grade, backfill to the indicated grade as herein specified.

10. Excavations for convenience of the Contractor shall be approved by the Engineer.

11. Place excavated material at a sufficient distance from edge of excavation so as not to cause cave-ins or bank slides, but in no case closer than 3 feet from the edge of excavations.

12. Unauthorized over excavations for footings and foundations shall be filled with lean concrete to indicated elevations.

13. Excavated earth material that is suitable for fill, backfill, or embankment shall be conditioned for re-use and properly stockpiled for later filling and backfilling operations as herein specified. Test, screen, and mix as necessary to meet specified requirements.

3.07 EMBANKMENT CONSTRUCTION

A. Construct embankments to lines, grades, and contours indicated, in layers as nearly uniform and horizontal as is consistent with the indicated finished contour and profile. Maximum thickness of the layers shall be 8 inches before compaction.

B. Compact each layer to specified density for entire width of the embankment. Achieve required compaction by rolling with compaction equipment suitable for type and condition of the particular material. Roll in a longitudinal direction parallel to longest dimension, starting at outer edges and progressing toward the center.

C. Moisture-condition embankment fill material as required to achieve its compaction to the specified density, within the tolerances specified herein.

D. Do not compact material that contains excessive moisture. In such cases, scarify to the full depth of the layer having excessive moisture content and dry by reworking, mixing with dry materials, or other approved methods.

E. Remove material that cannot be compacted to required density within specified tolerances, and replace with suitable material.

F. Where pipes, culverts, or structures extend into embankments, construct embankment to at least 2 feet over and 10 feet on either side of the pipe, culvert, or structure location prior to excavation.

G. Where fill is to be placed against hillsides or slopes steeper than 5 to 1 (horizontal to vertical), the existing slope shall be benched at least 6 feet horizontally into the hillside as the new embankment is placed in horizontal lifts.

H. Do not commence final shaping until above specified requirements have been completed. Shape entire surface of the slopes of cuts and embankments to true grade, alignment, and cross section indicated. Leave cut slopes in rock with uniform surface, and remove all loose overhanging rock.

3.08 SUBGRADE PREPARATION

A. Perform all cutting, blading, and shaping as required to cut and shape the sub grade to the grades and elevations indicated.

B. Sub grade preparation includes fine grading, reworking as necessary, and preparation of cut, fill, or embankment upon which the structure and equipment foundations, pipe, sub ballast, sub base, base, and pavement will be placed. Remove unsuitable sub grade material, such as weak or compressible soils.

C. Scarify and mix entire surface of sub grade to a depth of at least 6 inches. Moisture-condition scarified sub grade to 3 percent above optimum moisture content. If sub grade stabilization material is required, incorporate it into the sub grade at this time.

D. After the material has been thoroughly mixed and moisture-conditioned, accurately construct and fine grade the sub grade to indicated line, grade, and contour with high and low spots eliminated. Compact for full width to the specified density. Remove soft spots developed during working, fill with approved material, and re-compact.

E. Finish sub grade to straightedge or template within specified tolerances with the finished surface bladed to a uniform, dense, smooth texture.

3.09 FOUNDATION PREPARATION

A. Complete construction of the excavation support and dewatering systems prior to construction of structure and equipment foundations.

B. Avoid disturbing bottom of excavation. If bottom is disturbed, restore and stabilize the bearing foundation with compacted pervious backfill material as specified herein.

C. If material at bottom of the excavation is rock, remove loose material and roughly level the bearing foundation to indicated elevation. If the bottom contains occasional rock outcroppings or rock in only a portion of the area, remove such rock to a depth of 6 inches below indicated sub grade and backfill with lean concrete.

D. Where unsuitable material is encountered at the elevations indicated for foundations, all soft, loose, or unsuitable material shall be removed. The area shall be scarified to a minimum depth of 12 inches, and the planned elevation shall be re-established by backfilling with structural backfill, moisture-conditioning, and compacting to a minimum dry density of 95 percent of the maximum laboratory dry density as determined in accordance with ASTM D1557. Where the exposed foundation consists of competent, undisturbed in-place soils, scarifying may be omitted.

3.10 SUBGRADE FILLING/RAISING GRADE

A. Compacted fill for raising of sub grade to indicated elevation shall be constructed by approved methods. Fill material shall be spread in uniform lifts not exceeding 8 inches in uncompacted

thickness. Fill material that does not contain sufficient moisture to compact properly shall be sprinkled with water; if it contains excess moisture it shall be aerated or permitted to dry to the proper water content. Fill material and water shall then be thoroughly mixed before being compacted. Each layer of spread fill material shall be compacted to the specified density.

B. Control of fill shall consist of field inspection and testing to determine that each layer has been compacted to the required density and to ensure that optimum moisture is being obtained. Any layer or portion of a layer that does not attain the compaction required shall be scarified and re-compacted until the required compaction is obtained.

C. Spreading and compacting shall be performed as required to produce the required density and a uniform surface smooth and true to grade.

3.11 COMPACTION

A. Compaction Density: Compact each layer of embankment, fill, and backfill material to not less than the indicated or specified compaction. Required compactions are defined as Class I, Class II and Class III, as follows:

1. Class I Compaction: 90 percent relative compaction as determined by ASTM D1557.

2. Class II Compaction: 95 percent relative compaction as determined by ASTM D1557.

3. Class III Compaction: 100 percent relative compaction as determined by ASTM D1557

B. Required Compactions:

1. Embankment or Fill where the Surface will be Bearing Foundation: Class II for full depth. Where embankment construction exceeds 5 feet in depth, provide minimum Class I compaction below the top 2.5 feet.

2. Fill Below Trackways and Pavements: Class II for full depth. Where fill exceeds 3 feet in depth, provide minimum Class I compaction below the top 3 feet.

3. Backfill around Structures: Class I under top 12 inches; Class II for top 12 inches.

4. Backfill within 20’ of UPRR Structures: Class III compaction within 20’ of any bridge abutments, footings or culvert crossings supporting UPRR rail traffic in accordance with Section 31 23 43, Structure Excavation and Backfill.

5. Cut-and-Cover Backfill: Class I to 36 inches above structure or utility; Class II for balance, with a minimum of Class II for top 12 inches.

6. Original Ground or Cut Sub grade: Except as specified in Articles 3.08, Subgrade Preparation and 3.09, Foundation Preparation, where original ground or cut sub grade, or fill less than 1 foot thick, will be sub grade or bearing foundation, scarify the surfaces and provide Class II compaction for at least 8 inches in depth. Include the following additional requirements:

   a. Provide Class II compaction for original ground when such original ground is within 3.5 feet of top of rail profile or within 2.5 feet of finished pavement grade, for full width of trackway and pavement plus three feet on each side thereof.

   b. Provide Class II compaction for top 6 inches of undisturbed original ground upon which embankments are to be constructed.

7. Where not otherwise indicated or specified and where structures are not involved, provide 92% relative compaction to minimize settlement. In excavated areas the top 0.5 foot of undisturbed material shall be compacted to 92 percent.

3.12 BACKFILLING

A. Use materials removed from site excavations if such material meets specified requirements.

B. Backfilling is required around all substructures. Fill all abandoned vaults, shafts, airways, adits, holes, pits, and other voids.

C. Place backfill in layers not to exceed eight inches of loose material, and compact each layer to specified density before the next layer is placed.

D. Place backfill material in such manner that unbalanced horizontal loads will not be applied to a newly placed structure or portion of structure, utility, or pipeline. Do not backfill around portions of structures requiring backfill on only one side or on less than all sides, until the concrete has reached the specified 28-day strength to withstand the earth pressures on structures.

E. When placing material for backfill around waterproofed structures, protect such structures and the waterproofing thereof with a shield when necessary to prevent displacement or injury by stones or other hard substances in the backfill.

F. Do not backfill on or against structural concrete until the specified 28-day concrete strength has been attained.

G. Complete backfill for end bents and abutments, including backfill for wingwalls, in accordance with the above specified time/strength limit. Step slopes behind abutments, unless otherwise indicated, to prevent backfill from acting as a wedge against the abutment. Provide drainage behind abutments and wingwalls as indicated.

H. Do not use compaction equipment and methods that produce excessive horizontal or vertical earth pressures on structures. Excessive horizontal earth pressures are those in excess of at-rest earth pressures. Excessive vertical earth pressures are those in excess of overburden pressures.

I. Imported borrow (top soil) within the landscaping area shall conform to Section 32 90 00, Planting and these technical specifications.

3.13 FINISH GRADING

A. Finish grade all areas to elevations and grades indicated. In areas to receive topsoil and landscape planting, finish grading shall be performed to a uniform 7 to 8 inches below the grades and elevations indicated.

B. Place and spread stockpiled topsoil to a uniform thickness of 6 inches (approximately) in areas to receive topsoil and landscape planting. Place and spread to a uniform thickness approximately 1 inch below finish grades indicated.

3.14 FIELD QUALITY CONTROL

A. Regulatory Requirements: In compliance with the California Building Code, Chapter 33 and Appendix Chapter 33, the Contractor's earthwork operations shall be performed under the observance and inspection of a Contractor-employed geotechnical engineer currently registered in the State of California, as follows:

1. Site preparation, cutting and shaping, excavating, filling, backfilling, and embankment construction shall be carried out under the inspection of the geotechnical engineer, who will perform appropriate field and laboratory tests, as determined by the geotechnical engineer, to evaluate the suitability of fill and backfill material, the proper moisture content for compaction, and the degree of compaction achieved. Fill or backfill that does not meet the specified requirements shall be removed or recompacted until the requirements are satisfied.

2. Cutting and shaping, excavating, conditioning, filling, backfilling, and compacting procedures require approval of the geotechnical engineer as they are successively performed. Work found to be unsatisfactory or work disturbed by subsequent operations before approval is granted shall be corrected in an approved manner as approved by the geotechnical engineer.

B. Density Tests: Compacted fill, backfill, and embankment shall be tested to verify compliance with specified requirements in accordance with ASTM D2922. Frequency of tests shall be in accordance with the Contractor's Quality Plan, but not less than the following:

1. Expansive Horizontal Areas: One test per 100 cubic yards, or fraction thereof, of fill or backfill placed.

2. Confined Areas and Embankments: One test per every second lift of fill, backfill, or embankment placed.

C. Compaction Tests: Tests for compaction shall be performed in accordance with test procedures specified in ASTM D1557, Method D, as applicable. Field-testing of soils or compacted fill in place shall be performed in accordance with applicable requirements of ASTM D2922.

D. Moisture Content Tests: Compacted fill, backfill, and embankment shall be tested to verify compliance with specified requirements in accordance with ASTM D3017. Minimum frequency of tests shall be as specified above for density tests.

E.

END OF SECTION 31 00 00

SECTION 311100

CLEARING AND GRUBBING

PART 1 - GENERAL

1.01 SECTION INCLUDES

A. Clearing and grubbing

B. Tree branches

C. Demolition/removal

D. Disposal of removed materials and debris

E. Salvage

F. Backfill

1.02 RELATED SECTIONS

A. State of California, Department of Transportation (Caltrans), Standard Specifications (2006):

1. Section 15 Existing Highway Facilities.

2. Section 16 Clearing and Grubbing.

B. Dust control is specified in Section 01 57 00, Temporary Controls.

C. Temporary facilities, such as fences, barricades, warning lights, and other temporary safety measures, are specified in California Department of Transportation (Caltrans), Standard Specifications (2010), Section 5, Control of Work.

D. Demolition of structures and removal, salvage, or other disposition of slabs, footings and foundations; existing pavement, curbs and gutters, sidewalks, headwalls, walls, and steps; utility service facilities; guardrail and posts, highway and street signs and fences; and other miscellaneous structures and site improvements that interfere with new construction are specified in Section 02 41 00, Demolition.

E. Removal of items that are buried below grade and salvaging the topsoil is specified in Section 31 00 00, Earthwork.

PART 2 - PRODUCTS

2.01 MATERIALS AND EQUIPMENT

A. The Contractor shall furnish all materials, tools, equipment, facilities, and services as required for performing site clearing, grubbing and other site preparation work.

PART 3 - EXECUTION

3.01 GENERAL

A. Clearing and grubbing work which interfere with construction or which are directed to be removed by City of Fairfield shall be performed as specified in Section 15, Existing Highway Facilities, and Section 16, Clearing and Grubbing, of the Caltrans Standard Specifications and these technical specifications, or as shown on the Plans, or as directed by City of Fairfield. Coordinate with salvaging of topsoil specified in Section 31 00 00, Earthwork

3.02 CLEARING AND GRUBBING

A. Clearing and grubbing shall include the removal and disposition of all objectionable material not specified for separate payment elsewhere in these technical specifications, including trees (less than 6 inches in diameter measured 4 feet from the ground), shrubs, other vegetation; and debris and rubbish of any nature.

B. Do not start earthwork operations in areas where clearing and grubbing are not complete, except that stumps and large roots may be removed concurrently with excavation.

C. Where the work includes requirements for wood chip mulch, acceptable material from clearing and grubbing activities may be used to produce such mulch.

D. Tree trimming is not to be performed during Migratory Bird Nesting period.

E. Remove tree branches overhanging trackways, roadways, and other designated areas of the site to within 20 feet of finish grade. Cut off branches neatly and close to the tree boles. Remove other branches as necessary to present a balanced appearance. Treat scars resulting from tree branch removal with a heavy coat of approved tree paint.

F. All existing vegetation, outside the areas to be cleared and grubbed, shall be protected from injury or damage resulting from the Contractor's operations.

G. All activities controlled by the Contractor, except cleanup or other required work, shall be confined within the limits of the areas to be graded.

H. Nothing herein shall be construed as relieving the Contractor of responsibility for final cleanup.

I. Stockpiling of items removed in conjunction with clearing and grubbing operations by the Contractor will not be allowed. Contractor shall remove and dispose of all such materials from the site on the same day as the clearing and grubbing operations.

END OF SECTION 31 11 00

SECTION 321123

AGGREGATE BASE COURSE

PART 1 - GENERAL

1.01 SECTION INCLUDES

A. Aggregate base material.

B. Installation standards.

C. Spreading of material.

D. Compacting.

E. Field quality control.

1.02 RELATED SECTIONS

A. Section 32 12 16, Asphalt Paving

1.03 CLASSIFICATION

A. Aggregate bases are designated as Class 2.

1.04 REFERENCES

A. American Society for Testing and Materials (ASTM):

1. ASTM C136 Test Method for Sieve Analysis of Fine and Coarse Aggregates
2. ASTM D421 Practice for Dry Preparation of Soil Samples for Particle-Size Analysis and Determination of Soil Constants
3. ASTM D1241 Specification for Materials for Soil-Aggregate Subbase, Base, and Surface Courses
4. ASTM D1557 Test Method for Laboratory Compaction Characteristics of Soil Using Modified Effort
5. ASTM D2419 Test Method for Sand Equivalent Value of Soils and Fine Aggregate
6. ASTM D2844 Test Method for Resistance R-Value and Expansion Pressure of Compacted Soils
7. ASTM D2922 Test Methods for Density of Soil and Soil-Aggregate in Place by Nuclear Methods (Shallow Depth)
8. ASTM D3017 Test Method for Moisture Content of Soil and Soil-Aggregate in Place by Nuclear Methods (Shallow Depth)

9. ASTM D3744 Test Method for Aggregate Durability Index

B. State of California, Department of Transportation (Caltrans), Standard Specifications, 2006 edition:

1. Section 17 Watering

2. Section 26 Aggregate Bases

C. City of Fairfield Standard Specification and Details.

1.05 SUBMITTALS

A. General: Refer to California Department of Transportation (Caltrans), Standard Specifications (2010), Section 5, Control of Work for submittal requirements and procedures.

B. Product Data: Submit source, gradation, R-value, sand equivalent, and durability for the proposed base course material.

C. Test Reports: Submit plant and field test reports as specified in Articles 2.02, Source Quality Control and 3.05, Field Quality Control, herein.

PART 2 - PRODUCTS

2.01 AGGREGATE BASE MATERIAL

A. Aggregate for the two classes of aggregate bases at the time the base material is deposited on the prepared sub grade or sub base shall conform with ASTM D1241 and the following requirements:

1. Class 2 Aggregate Base:

a. Class 2 aggregate base shall consist of crushed stone or gravel, free from vegetable matter and other deleterious substances. Aggregate shall consist of material of which 90 percent by weight shall be crushed particles. Composition of aggregate base, in percentages by weight, shall conform to one of the following gradings, determined in accordance with ASTM C136:

Percentage Passing Sieves

Sieve Sizes		3/4-inch Maximum
2-inch	-----	
1-1/2 inch		-----
1inch		100
3/4-inch		90-100
No. 4		35-55
No. 30	10-30	
No. 200		2-9

b. Class 2 aggregate base shall conform to the following additional requirements:

Tests	ASTM Test Method	Requirements
Resistance (R-Value)	D2844	80 min.
Sand Equivalent	D2419	50 min.
Durability Index	D3744	40 min.

2.02 SOURCE QUALITY CONTROL

A. The Contractor shall perform sampling and tests of the aggregate base material in accordance with the ASTM Test Methods herein specified, to determine compliance with specified requirements. Samples shall be taken from material as delivered to the site, and shall be prepared in accordance with ASTM D421, as applicable.

B. Aggregate grading or sand equivalent test shall represent no more than 500 cubic yards of base course material or one days production, whichever is the greater amount.

PART 3 - EXECUTION

3.01 EXAMINATION

A. The Contractor shall call for an inspection by the Engineer and obtain written acceptance of the prepared sub grade or sub base before proceeding with the placement of aggregate base course.

B. The sub grade or sub base to receive aggregate base course, immediately prior to spreading, shall conform to the compaction and elevation tolerances indicated for the material involved and shall be free of standing water and loose or extraneous material.

3.02 INSTALLATION STANDARDS

A. Aggregate base course shall be applied over the prepared sub grade or sub base and compacted in accordance with Section 26, Aggregate Bases, of the Caltrans Standard Specifications May 2006.

B. Aggregate base course shall have minimum uniform thickness after compaction of dimensions indicated. Where not indicated, compacted thickness shall be 6 inches.

C. All compaction expressed in percentages in this section refers to the maximum dry density as determined by ASTM D1557 Method D.

3.03 SPREADING OF MATERIAL

A. Aggregate for base course shall be delivered as uniform mixture of fine and coarse aggregate and shall be spread in layers without segregation.

B. Aggregate base course material shall be free from pockets of large and fine material. Segregated materials shall be remixed until uniform.

C. Aggregate base material shall be moisture-conditioned to near optimum moisture content in accordance with the applicable requirements of Section 17, Watering, of the Caltrans Standard Specifications May 2006.

D. Aggregate base course 6 inches and less in thickness may be spread and compacted in one layer. For thickness greater than 6 inches, the base course aggregate shall be spread and compacted in two or more layers of uniform thickness not greater than 6 inches each.

3.04 COMPACTING

A. Relative compaction of each layer of compacted aggregate base material shall be not less than 95 percent as determined by ASTM D1557.

B. Thickness of finished base course shall not vary more than 3/4 inch from the indicated thickness at any point. Base that does not conform to this requirement shall be reshaped or reworked, watered, and recompact to achieve compliance with specified requirements.

C. The surface of the finished aggregate base course at any point shall not vary more than 3/4 inch above or below the indicated grade.

3.05 FIELD QUALITY CONTROL

A. The Contractor shall perform field tests in accordance with ASTM D2922 to determine compliance with specified requirements for density and compaction of aggregate base material, and with ASTM D3017 to determine moisture-content compliance of the installed base course.

B. Testing frequency shall be not less than one test for every 2,000 square feet of base course material, per layer or lift.

END OF SECTION 32 11 23

SECTION 321216

ASPHALT PAVING

PART 1 - GENERAL

1.01.1 SECTION INCLUDES

A. Placing of base course.

B. Placing of asphalt concrete.

C. Sealant.

D. Field quality control.

E. Maintenance of pavement.

1.02 RELATED SECTIONS

A. Preparation of sub grade to proper grade for base course, including compaction, is specified in Section 31 00 00, Earthwork.

B. Portland cement concrete paving is specified in Section 32 13 13, Concrete Paving.

C. Aggregate base course for asphalt paving is specified in Section 32 11 23 - Aggregate Base Course.

D. Painting of stripes and other markings on pavement is specified in Section 32 17 23, Pavement Markings.

E. Portland cement concrete curbs and gutters are specified in Section 32 16 21, Concrete Curbs, Gutters, Driveways and Walks.

1.03 REFERENCES

A. State of California, Department of Transportation (Caltrans), Standard Specifications (2006)

1. Section 37 Bituminous Seals
2. Section 39 Asphalt Concrete
3. Section 88 Engineering Fabrics
4. Section 92 Asphalts
5. Section 93 Liquid Asphalts
6. Section 94 Asphaltic Emulsions

B. State of California, Department of Transportation (Caltrans), Standard Test Methods:

1. Calif. Test 202 Method of Tests for Sieve Analysis of Fine and Coarse Aggregates
2. Calif. Test 375 Method of Determining the In Place Density and Relative Compaction of AC Pavement

3. Calif. Test 379 Method of Determining Asphalt Content of Bituminous Mixtures by Use of the Troxler Nuclear Gauge (Model 3241)

4. Calif. Test 382 Method of Test for Determination of Asphalt and Moisture Contents of Bituminous Mixtures By the Ignition Method

1.04 REGULATORY REQUIREMENTS

A. Asphaltic products and solvents shall be compliant with the latest regulations of the Bay Area Air Quality Management District regarding regulations governing permissible content of volatile organic compounds (VOC).

1.05 SUBMITTALS

A. General: Refer to California Department of Transportation (Caltrans), Standard Specifications (2010), Section 5, Control of Work, for submittal requirements and procedures.

B. Mix Design: Submit proposed mix design for each asphaltic concrete mixture and seal coat to be used in the work, covering the specific materials to be used in the mixes. Include test data in support of each proposed mix design.

C. Test Reports: Submit test results of sampling and testing, and inspection records within 24 hours of asphaltic concrete placement.

1.06 PROTECTION

A. Protect concrete pavements and walks, curbs and bases, and other improvements adjacent to the operations with suitable materials. The Contractor shall be responsible for any damage caused by the Contractor's employees or equipment and shall make necessary repairs. Buildings and other surfaces shall be covered with paper or other protection, where required. All damage caused by the Contractor's operations shall be repaired or replaced as required.

PART 2 - PRODUCTS

2.01 BASE COURSE MATERIAL

A. Class 2 Aggregate Base mineral aggregate as specified in Section 32 11 23, Aggregate Base Course, of these Specifications.

2.02 PRIME AND TACK COATS

A. Prime Coat: Liquid asphalt, slow curing type in conformance with Section 93, Liquid Asphalts, of the Caltrans Standard Specifications.

B. Tack Coat: Diluted SS-1 or SS-1h emulsion in conformance with Section 94, Asphaltic Emulsions, of the Caltrans Standard Specifications.

2.03 PAVEMENT REINFORCING FABRIC

A. Pavement reinforcing fabric in conformance with Section 88, Engineering Fabrics, of the Caltrans Standard Specifications.

2.04 ASPHALT PAVING MATERIALS

A. Paving Asphalt: Steam-refined AR-4000 grade, in accordance with Section 92, Asphalts, of the Caltrans Standard Specifications.

B. Aggregate: Type A, with the grading of the combined aggregate conforming to 1/2-inch maximum size, medium grading, or 3/4-inch maximum size, medium grading, as indicated, and as specified in Section 39, Asphalt Concrete, of the Caltrans Standard Specifications. For Plaza Asphalt Pavement use 1/2-inch maximum size, medium grading.

C. Mixing Facilities: Asphalt concrete surfacing material shall be furnished from an approved commercial asphalt central mixing plant.

D. Asphalt Binder: Asphalt binder used in HMA Type A must be PG 64-10.

2.05 SEAL COAT

A. Fog seal coat or fine seal coat, as indicated, in conformance with Section 37, Bituminous Seals, of the Caltrans Standard Specifications.

2.06 MIX DESIGN

A. Design of asphaltic concrete mixes shall be provided by the Contractor, and shall be obtained from a qualified independent testing laboratory or agency, properly equipped to design asphaltic concrete mixes. Costs of obtaining mix designs shall be at the Contractor's expense.

B. Design of asphaltic concrete mixes, including aggregate quality and gradation, shall conform to the quality requirements of Section 39, Asphalt Concrete, of the Caltrans Standard Specifications.

2.07.1 SOURCE QUALITY CONTROL

A. The Contractor shall perform sampling and tests of materials in accordance with the following requirements:

1. Aggregate Grading: The combined aggregate, prior to addition of asphalt binder (paving asphalt), shall conform with the Operating Range requirements specified in Section 39, Asphalt Concrete, of the Caltrans Standard Specifications for the type of aggregate specified herein. Conformance with grading requirements shall be determined by California Test 202.

2. Frequency of Tests: Minimum testing frequency shall be one test for every 500 tons, or fraction thereof, for each graded aggregate placed each day.

3. Asphalt Content: Asphalt content shall be within plus or minus 0.50 percent of the mix design content. Conformance with asphalt content requirements shall be determined by California Test 382 or 379 from samples taken from the mat behind the paving machine. Minimum testing frequency shall be one test for every 500 tons, or fraction thereof, for each asphaltic paving mix placed each day.

PART 3 - EXECUTION

3.01 STAGE CONSTRUCTION

A. Asphalt concrete and asphalt concrete base shall be spread and compacted in layers.

B. The top layer of asphalt concrete shall not exceed 0.20-foot in compacted thickness. The next lower layer shall not exceed 0.25-foot in compacted thickness, and any lower layers shall not exceed 0.40-foot in compacted thickness.

C. Each layer of asphalt concrete base shall not exceed 0.40-foot in compacted thickness. No layer shall be placed over a layer which exceeds 0.25-foot in compacted thickness until the temperature at mid depth, of the layer which exceeds 0.25-foot in compacted thickness, is not more than 160°F.

3.02 PLACING OF BASE COURSE

A. The Contractor shall call for an inspection by the Engineer and obtain written approval of the sub grade before proceeding with the base course.

B. Base course shall be minimum uniform thickness after compaction of dimensions indicated. Where not indicated, compacted thickness shall be 6 inches for parking stalls and 8 inches for roads, driveways, and aisles of parking areas.

C. Base course shall be placed over finished sub grade and compacted in accordance with Section 32 11 23, Aggregate Base Course.

D. After base course has been completed, the Contractor shall call for an inspection by the Engineer and obtain written approval before proceeding with application of the asphalt-wearing surface.

3.03 PLACING ASPHALT CONCRETE

A. Areas to be paved shall be covered with a layer of hot asphalt concrete surfacing not less than the thickness indicated after compaction. Where not indicated, compacted thickness shall be 2 inches for parking stalls and 2-1/2 inches for roads, driveways, and aisles of parking areas.

B. Paving asphaltic concrete shall be delivered, laid, rolled, and finished in accordance with the Standard construction process of Section 39, Asphalt Concrete of the Caltrans Standard Specifications.

C. Before placing asphalt concrete on untreated base, a liquid asphalt prime coat shall be applied to the base course in the areas to be surfaced in accordance with Section 39-4, Subgrade, Prime Coat, Paint Binder (Tack Coat) and Pavement Reinforcing Fabric, of the Caltrans Standard Specifications. Prime coat shall be applied at the rate of 0.25 gallons per square yard.

D. Pavement reinforcing fabric shall be embedded in the liquid prime coat in accordance with Section 39, Asphalt Concrete, of the Caltrans Standard Specifications.

E. Before placing asphalt concrete, a tack coat (paint binder) shall be applied to all vertical surfaces against which asphalt concrete surfacing will be placed. Tack coat (paint binder) shall be applied in accordance with Section 39-4, Subgrade, Prime Coat, Paint Binder (Tack Coat) and Pavement Reinforcing Fabric, of the Caltrans Standard Specifications at the rate of from 0.02 to 0.10 gallons per square yard.

F. Finish surface of the wearing course shall be thoroughly compacted, smooth, and free from ruts, humps, depressions, cold joints, or other irregularities.

G. Finish paving shall conform to slopes, lines, and finish grades indicated, and shall drain properly. Where adjacent surfaces are intended to be flush (as at concrete gutters, walks, and paving), they shall conform smoothly at all joints.

H. Ridges, indentations, and other objectionable marks left in the surface of the asphalt concrete by paving or rolling equipment shall be eliminated by rolling. The use of equipment that leaves ridges, indentations, or other objectionable marks in the asphalt concrete shall be discontinued, and other acceptable equipment shall be employed.

I. Where cold joints are indicated or necessary, cut back the placed and compacted cold asphalt a minimum of 3 inches with a concrete or masonry power saw, so that a vertical face of compacted full thickness material is exposed. Treat this surface with a tack coat before proceeding with the placement of new asphaltic concrete surfacing.

J. Finish paving shall conform to finish elevations within plus or minus 0.01 of a foot and shall be level to within plus or minus 1/4 inch in 10 feet when measured with a 10-foot straightedge in any direction.

K. For AC leveling and overlay, plane as necessary to allow a minimum overlay of two inches (0.17'). Finish paving shall conform to slopes, lines, and finish grades indicated on the plans, and shall drain properly. Where adjacent surfaces are intended to be flush such as at concrete gutters, walks, and paving, the AC overlay shall conform smoothly at all joints. Employ gutter/wedge cut techniques along existing curb and gutter to provide flush surface with existing curb and gutter.

L. A gutter / wedge cut consists of removing the existing asphalt pavement to a depth of two inches (0.17') below the lip of gutter, or to two inches (0.17') below existing grade when gutter cuts are made through old overlays to the face of curb.

The gutter / wedge cut shall daylight 6' from the lip of curb. The line from two inches (0.17') below the existing surface (at the face of the cut) to the daylight shall be a straight line.

1. A wedge cut shall be made straight through a minor street from lip of gutter to lip of gutter or as directed by the Engineer. When the overlay goes straight through a major side street (signalized intersection), a gutter cut will proceed around the return to the E.R. only or as directed by the Engineer. A conform cut shall be made in a similar manner to a gutter cut to allow a good conform to existing asphalt concrete to be left in place.

2. The purpose of gutter / wedge and conform cuts is to allow an exact conform with the lip of gutter or existing pavement and to maintain existing drainage; this conform of line and grade shall be maintained when the overlay is installed in these areas. Extra raking or other work required to fulfill this requirement is hereby specified at no extra cost to the City.

3. Gutter / wedge and conform cuts shall be accomplished by cold planing. The equipment used shall be a type capable or maneuvering close to structures and maintaining a straight line. The asphalt to remain in place shall not be damaged by the Contractor's operation in any way and shall provide a uniform and stable base for resurfacing.

3. 04 SEAL COAT

A. Apply seal coat over finished paving surface in conformance with Section 37, Bituminous Seals, of the Caltrans Standard Specifications.

3. 05 FIELD QUALITY CONTROL

A. The Contractor shall control the quality of the Work and shall provide adequate testing to assure compliance with these Specifications.

B. After completion of paving work, all paving shall be flooded with water, and any resulting "ponds" shall be ringed with chalk. Such hollows shall be corrected with addition of asphalt paving materials and re-rolling until all paving is completely level and free from hollows and high spots.

C. The Contractor shall perform in-place density and compaction tests of the completed pavement in accordance with California Test Method No. 375 to determine compliance with specified requirements. Relative compaction shall be 96 percent.

3.06 MAINTENANCE OF PAVEMENT

A. Upon completion of final rolling, traffic shall not be permitted on the finished pavement for at least six hours, and until the asphalt concrete has cooled sufficiently to withstand traffic without being deformed.

B. Finished pavement shall be maintained in finished clean condition until the Work is accepted by the Engineer.

END OF SECTION 32 12 16

SECTION 321313

CONCRETE PAVING

PART 1 - GENERAL

1.01 SECTION INCLUDES

A. Materials and accessories.

B. Preparation of subgrade and base.

C. Formwork.

D. Placing concrete reinforcement.

E. Placing concrete.

F. Joints.

G. Finishing.

H. Curing and protection.

I. Installation of joint seals.

J. Field quality control.

1.02 RELATED SECTIONS

A. Preparation of subgrade to proper grade for concrete, including compaction, is specified in Section 31 00 00, Earthwork.

B. Preparation of base is specified in Section 32 11 23, Aggregate Base Course.

C. Portland cement concrete curbs and gutters are specified in Section 32 16 21, Concrete Curbs, Gutters, and Walks.

D. Portland cement concrete, concrete reinforcement, and various materials, services, and incidentals pertaining thereto shall conform to Section 03 20 00, Concrete Reinforcing, Section 03 15 00, Concrete Accessories, Section 03 30 00, Cast-In-Place Concrete, and Section 03 35 00, Concrete Finishing.

1.03 REFERENCES

A. American Association of State Highway and Transportation Officials (AASHTO):

1. AASHTO M81 Cut-Back Asphalt (Rapid-Curing Type)

B. American Concrete Institute (ACI):

1. ACI 117 Standard Tolerances for Concrete Construction and Materials

2. ACI 318 Building Code Requirements for Reinforced Concrete

C. American Society for Testing and Materials (ASTM):

1. ASTM A53 — Specification for Pipe, Steel, Black and Hot-Dipped, Zinc-Coated, Welded and Seamless

2. ASTM A615 — Specification for Deformed and Plain Billet-Steel Bars for Concrete Reinforcement

3. ASTM A663 — Specification for Steel Bars, Carbon, Merchant Quality, Mechanical Properties

4. ASTM C39 — Test Method for Compressive Strength of Cylindrical Concrete Specimens

5. ASTM C309 — Specification for Liquid Membrane-Forming Compounds for Curing Concrete

6. ASTM C496 — Test Method for Splitting Tensile Strength of Cylindrical Concrete Specimens

7. ASTM D2628 — Specification for Preformed Polychloroprene Elastomeric Joint Seals for Concrete Pavements

D. Federal Specifications (FS):

1. UU-B-790 — Building Paper, Vegetable Fiber, (Kraft, Waterproofed, Water Repellent, and Fire Resistant)

1.04 SUBMITTALS

A. General: Refer to California Department of Transportation (Caltrans), Standard Specifications (2010), Section 5, Control of Work for submittal requirements and procedures.

B. Product Data: Submit the respective manufacturer's product data for manufactured products.

C. Shop Drawings:

1. Submit drawings that indicate the locations of all joints in concrete, including construction joints, expansion joints, isolation joints, and weakened-plane or contraction joints.

2. Submit drawings of reinforcing steel, tie bars, and connecting dowels. Comply with requirements specified in Section 03 20 00, Concrete Reinforcing.

1.05 QUALITY ASSURANCE

A. Tolerances: Comply with requirements of ACI 117, Section on Pavements.

PART 2 - PRODUCTS

2.01 FORMS

A. Provide metal forms, weighing not less than 18 pounds per linear foot for pavement 8 inches thick, not less than 20 pounds per linear foot for pavement 9 inches thick, and not less than 22 pounds per linear foot for pavement 10 inches thick, and in no case less than 7/32 inch thick.

B. Provide side forms having a depth equal to the prescribed edge thickness of the pavement, without horizontal joints.

C. Provide forms having a base not less than 8 inches wide and a flanged tread or top surface not less than 2 inches wide. For multiple lanes, provide base width at least equal to height.

D. Provide forms not less than 10 feet long except where shorter forms are necessary for curves. Use metal keyway forms for the full length of roadway form to which attached. Provide wood bulkheads for the full width of pavement lane equipped with keyway form.

E. Provide holes for bars and dowel assemblies where required.

F. Provide at least three stake pockets to accommodate a 1 inch diameter stake in each section of form 10 feet or more in length, and at least two such pockets in each section of form less than 10 feet long.

G. Provide each section of form with a positive locking device that will secure it tightly to the adjoining section.

H. Provide forms free from warp and of sufficient strength to resist, without visible springing or settlement, all loads applied in the paving process.

2.02 MATERIALS AND ACCESSORIES

A. Concrete Reinforcement: Refer to Section 03 20 00, Concrete Reinforcing, for requirements.

B. Portland Cement Concrete: Refer to California Department of Transportation (Caltrans), Standard Specifications (2010), Section 90, Concrete, for requirements. Provide class of concrete as indicated on the Contract Drawings.

C. Liquid Asphalt: AASHTO M81, cut-back asphalt, rapid-curing type.

D. Subgrade Paper: Kraft laminated building paper with bituminous binder, reinforced, meeting requirements of FS UU-B-790.

E. Benches and Chairs: ACI 318.

F. Tie Bars: ASTM A615, Grade 60, of type and size indicated.

G. Dowels: Plain round bars meeting requirements of ASTM A615, Grade 60, or ASTM A663, Grade 80, epoxy-coated bars, furnished with approved snug-fitting ASTM A53 galvanized pipe sleeve. Provide sleeve with one end closed.

H. Expansion-Joint Filler: ASTM D2628, preformed elastomeric joint seal.

I. Joint Sealing Compound: Refer to Section 03 15 00, Concrete Accessories, for requirements.

J. Concrete Curing Compound: ASTM C309, Type 1.

PART 3 - EXECUTION

3.01 PREPARATION OF SUBGRADE AND BASE

A. Immediately prior to placing forms, condition and trim subgrade and base to exact shape, grade, and cross section required by the Contract Drawings. Condition and shape to indicated width between side forms plus not less than one extra foot on each side.

B. Use of a subgrade machine of approved type is permitted, in which case place forms in advance of exact conditioning and trimming, to permit use of the machine.

C. Where the crown is to be warped or sloped to conform to contour of intersecting streets, storm water inlets, and other intersecting contoured surfaces, shape subgrade to required depth and cross section by means of hand tools and other equipment as approved by the Engineer. In addition:

1. Drive grade stakes to proper elevation in the subgrade at 6-foot intervals in both directions.

2. Compact subgrade by rolling at least 1 foot wider on each side than the concrete.

3. Finish concrete in such locations by means of floats, shovels, spades, or other approved hand tools, operated so as to consolidate the concrete without segregation.

D. Deposit any excess material obtained from such preparations upon adjacent shoulders or as required.

E. Prepare base, if required, as specified in Section 32 11 23, Aggregate Base Course.

3.02 FORMWORK

A. Obtain written approval from the Engineer of the subgrade and base prior to placing forms and impervious compacted subgrade.

B. Place subgrade paper where indicated.

C. Do not use built-up forms. Remove forms with battered top surfaces, distorted faces or bases, and forms that are deformed or broken in any way; and, if straightened and repaired, do not reuse until they have been inspected and approved in writing by the Engineer.

D. Do not use forms showing a variation of more than 1/8 inch in a 10-foot length from the plane of the top or face when tested with a straightedge.

E. Join forms neatly and tightly and stake securely with stakes in every pocket. Drive up fully all locking devices at form joints so as to produce a smooth fitting, rigid joint.

F. Maintain proper grade and alignment under all working conditions. Maintain base of forms directly in contact with the finished subgrade and base.

G. Building of pedestals of earth or other materials upon which to rest forms in order to bring them to the required grades will not be permitted.

H. Clean and coat forms with form release compound before concrete is placed against them, each time they are used.

I. Do not remove forms from freshly placed concrete until the concrete has set for 12 hours.

3.03 PLACING CONCRETE REINFORCEMENT

A. When reinforcement is indicated, provide deformed bars, welded wire fabric, or prefabricated welded or clipped deformed bar mats, as indicated on the Contract Drawings, and of size and quantity indicated.

B. Place reinforcement so that the extreme longitudinal member will be located not more than 3 inches from the sides of the slab section, and extend the end of all longitudinal members to within 2 inches of the ends of slab sections.

C. Lap adjacent sheets of welded wire fabric and welded or clipped mats not less than 12 inches when the lap is made at right angles to the centerline of the pavement and where wire fabric sheets are permitted to be lapped parallel to the centerline.

D. Wrap the wire fabric or bar mats together with wire at all laps, at intervals not exceeding 24 inches.

E. Reinforce multiple lane construction with bar mats or sheets of welded wire fabric of same weight and size as though the paving were constructed in single lane widths. Install mats or sheets so as to leave an unreinforced longitudinal gap 6 inches wide, parallel to and centered on the lane lines.

F. Place tied bars or prefabricated bar-mat reinforcement securely supported on approved chairs as specified in Section 03 20 00, Concrete Reinforcing, and ACI 318. Install reinforcement in place on supports on the subgrade for a distance ahead of the paver equal to at least 500 feet or a two-hour run of the paver, whichever is greatest, before any paving is begun. Stop paving and install a bulkheaded construction joint whenever the paver comes to within 100 feet of the end of such steel placement. Secure reinforcement against displacement during concrete placement.

G. Tie Bars and Dowels:

1. Uniformly place all tie bars and dowel assemblies at the indicated depth below finished surface on 4-foot centers or other dimensions where indicated otherwise on the Contract Drawings.

2. In all of the above methods of reinforcement placement, install dowel bar assemblies and secure in place in metal chairs on the subgrade, ahead of the placement of the slab reinforcement and concrete.

3. Support tie bars for weakened-plane joints on metal chairs and securely fasten prior to placing concrete, or place on top of the freshly poured concrete and vibrate to position at proper depth. Install tie bars in such manner that upon initial set of the concrete they will be at proper alignment, depth and spacing, and at right angles to the designated line of cut.

4. Place tie bars for construction joints on metal chairs, or machine place, in such a manner that upon the initial set of the concrete, they will be at proper alignment, depth, and spacing, and at right angles to the formed edge of the joint.

3.04 PLACING CONCRETE

A. Notify the Engineer at least 24 hours in advance of placing concrete.

B. In the event completion of concrete placement during darkness should become necessary, provide a lighting system adequate to illuminate all concrete-placement operations.

C. An interval of more than 45 minutes between placing of two consecutive concrete batches will be cause for stopping paving operations. Should this occur, place a bulkhead with construction joint keyway.

D. Place concrete while fresh. Retempering of concrete will not be not permitted.

E. Do not chute concrete directly on to subgrade or base from any type of hauling unit without written permission from the Engineer.

F. Place concrete pavement in full traffic lane widths, separated by construction joints; or if approved, the concrete pavement may be placed monolithically, two or more traffic lanes wide without a construction joint, but with a longitudinal weakened-plane joint at each traffic lane line.

G. Deposit concrete in successive batches on the subgrade or base to full width of traffic lane and strike off with an approved screed-type finishing machine.

H. When constructing adjacent traffic lanes, the wheels of the finishing machine that rest on previously completed concrete shall be flat, without flanges, and the inside edge of the tread of the wheels shall not operate so close to edge of slab as to cause spalling or damage. The tread of the wheels shall not be less than 3-inches in width. The wheels on the opposite side that operate on the steel side forms shall have flanges on both sides.

I. Use a mechanical spreader of an approved type, designed to move the volume of freshly deposited concrete transversely.

J. Use concrete already placed in adjacent traffic lane, curb, or gutter as the form for new concrete placed adjacent thereto, but not until the concrete placed in the first lane has attained a split tensile strength of at least 300 pounds per square inch, as determined by ASTM C496.

K. Consolidate concrete by means of suitable vibrating screed, internal vibrator, or other approved vibratory equipment such that the concrete is effectively consolidated without segregation. Maintain amplitude of vibration such that the vibrations are perceptible on the surface of the concrete at least one foot from the vibrating equipment. Provide a device for measuring and indicating the actual frequency of vibrations.

L. Perform screeding and tamping by making one complete pass over the entire area of the pavement. Adjust the tamper to produce the proper tamping action and adjust screeds to an elevation slightly above finished grade, so that when properly consolidated and finished, the completed surface of the pavement will be at the required grade, true to cross section indicated, and free from laitance and porous areas.

M. Concrete required to be placed in widths less than a normal traffic lane may be compacted and shaped by a powered mechanical compacting and shaping machine supplemented by hand methods as necessary. Deposit concrete as nearly as possible in its final position. Do not use vibrators for extensive shifting of masses of fresh concrete.

3.05 JOINTS

A. General:

1. Joints in pavement are designated as longitudinal and transverse construction joints, transverse expansion joints, and longitudinal and transverse weakened-plane joints.

2. Construct the faces of all joints normal to the finished surface of the road.

3. Construct transverse joints normal to the centerline of the road and extending full width of pavement. Construct similar types of transverse joints in line with each other across the full width of the pavement.

4. Construct longitudinal joints coincident with or parallel to the pavement centerline.

5. Install load transfer devices parallel to finished surface of the road.

6. Maintain finished surface of concrete in the same plane on both sides of a joint.

B. Construction Joints:

1. Construction joints shall be made when placing fresh concrete against hardened concrete at planned locations and elsewhere when concreting is interrupted for longer than 45 minutes.

2. Connect concrete on both sides of longitudinal construction joints with tie bars as indicated.

3. Do not place transverse construction joints within 10 feet of any other transverse joint. Should it become necessary to stop concreting for a period of time sufficient to require the installation of a bulkhead and construction joint within 10 feet of an existing transverse joint, remove and waste the concrete that has been placed beyond the existing joint.

C. Transverse Expansion Joints:

1. Form transverse expansion joints at indicated locations by means of preformed expansion joint filler. Support the joint strips in position by means of metal holders and end supports. Hold the supports firmly in position during concreting, and maintain them in place after completion of pavement.

2. Use metal holders fabricated of minimum 16-gage sheet steel in the form of a deep channel extending not less than 4 inches downward on both sides of the joint strip, slotted and cut away as necessary to allow the concrete to make close contact with the joint strip at close intervals. Spread ends of holders to admit the end supports.

3. During placement and consolidation of concrete, secure joint holder and end supports so as to prevent movement of the joint strip and to keep the top edge of the joint strip approximately 1/2 inch below the surface of finished pavement. After concrete has been placed and consolidated, the metal holder may be removed and a suitable metal channel substituted therefore; fit the channel snugly over the top edge of the joint strip and maintain it there until the joint is edged.

4. After side forms are removed, remove concrete that has flowed around the ends of the joint filler.

D. Weakened-Plane Joints:

1. Construct weakened-plane joints with a power concrete or masonry saw to a depth of not less than 2 inches and a width of 1/4 inch, plus or minus 1/16 inch. Produce clean cuts with sharp edges and no dislocation of coarse aggregate.

2. Saw weakened-plane joints not less than twelve hours nor more than twenty-four hours after placing concrete, unless otherwise approved by the Engineer. Conduct night operations if necessary to meet these time limits. Maintain a stand-by power concrete saw on the site at all times when paving operations are under way.

3. Do not saw where volunteer transverse cracks exist. If a volunteer transverse crack exists within 5 feet of a planned, sawed joint, omit the sawed joint, but do not omit more than three consecutive planned, sawed joints.

4. Restore curing compound disturbed by sawing operations. Conduct sawing operations in such a manner that the surface and edges of pavement will be unprotected for not more than 20 minutes.

5. At the Contractor's option, longitudinal weakened-plane joints at traffic lane lines in multilane monolithic concrete pavement may be formed by placing a continuous strip of

plastic or other approved material that will not react adversely with the concrete. Use joint insert material of such width and character that, when placed vertically in the concrete, it will not bond with the concrete and will form an effective weakened-plane joint not less than 2 inches deep.

6. Insert the joint material with a mechanical device that places the material in a continuous strip, except where intervening structures break the continuity of paving. Splices in joint material will be permitted if splices are effective in maintaining the continuity of the joint material as placed.

7. Maintain top of joint material not more than 1/8 inch below finished surface of concrete. Do not deform joint material from a vertical position. Maintain alignment of finished joint parallel with center line of pavement, and free of local irregularities that exceed 1/2 inch, measured by a 12 foot straightedge, except for normal curvature of center line alignment.

8. Use a mechanical installation device to vibrate the concrete during placement of the strip, to cause the concrete to flow evenly about the joint material.

9. On completion of joint sawing, or on removal of the optional joint insert material, clean the joint and remove moisture by blowing with compressed air if necessary. Fill the joint with joint sealing compound in accordance with the manufacturer's instructions.

3.06 FINISHING

A. Following placing of concrete and after it has been screeded with a transverse finishing machine, screed longitudinally with a power-operated longitudinal finishing machine of an approved type. Work longitudinal screed cross-wise so as to level any irregularities in the surface.

B. Following longitudinal screed, use an approved scraping strike off for removing any accumulation of excess mortar, laitance, or inert material from the surface.

C. For the final finish, drag surface with a single full width strip of burlap to produce a uniform gritty texture on the surface. Keep burlap wet and periodically wash out to remove accumulations of mortar.

D. After burlap dragging has been completed and concrete has taken its initial set, use an edging tool with 1/4 inch radius along each edge of the surface to prevent chipping of the edges in the removal of forms. Tool in same manner the longitudinal edge of any concrete surface adjoining previously placed pavement, to avoid subsequent spalling. Edge all joints at the same time, working from suitable bridges. Take particular care to keep surface of concrete in the same plane on both sides of each joint. Kneeling planks will not be permitted on the concrete surface.

E. Where special circumstances require, hand float finishing may be substituted for a finishing machine, providing the following requirements are met:

1. Use float of approved design and construction to provide a true floated surface.

2. Operate each float from the side of the pavement and parallel to the centerline of the pavement.

3. Use edge of float to cut down high areas. Float removed material into depressions until a true surface is obtained.

4. On each successive passage of the float, slightly lap the previous path; and, upon completion of each passage, bring the float back and smooth the overlap between the two passages.

5. Operate floats as far back of tamping machine as the concrete remains workable, with sufficient passes to remove perceptible irregularities.

6. Maintain at least one spare float in good condition and available on the worksite at all times.

3.07 CURING AND PROTECTION

A. Comply with the applicable requirements of Section 03 35 00, Concrete Finishing, for curing concrete with liquid membrane-forming curing compound. Do not permit traffic on new concrete pavement until the concrete has attained its 28-day compressive strength as determined by strength tests in accordance with ASTM C39.

3.08 INSTALLATION OF JOINT SEALS

A. Install joint fillers and sealing compounds where indicated in accordance with applicable requirements of Section 03 15 00, Concrete Accessories.

3.09 FIELD QUALITY CONTROL

A. Strength Tests: The Contractor shall perform strength tests of concrete as specified in California Department of Transportation (Caltrans), Standard Specifications (2010), Section 90, Concrete.

B. Thickness: After pavement is placed and cured, the Contractor shall take core samples at locations designated by the Engineer, for determination of actual thickness. A minimum of one core sample shall be obtained from each 100 feet of roadway for each lane.

END OF SECTION

SECTION 321621

CONCRETE CURBS, GUTTERS, AND WALKS

PART 1 - GENERAL

1.01 SECTION INCLUDES

A. Materials and accessories.

B. Preparation of sub grade.

C. Types of construction.

D. Joints.

E. Form removal.

F. Finishing.

G. Curing and protection.

H. Field quality control.

1.02 RELATED SECTIONS

A. Preparation of sub grade to proper grade for concrete, including compaction, is specified in Section 31 00 00, Earthwork.

B. Work shall conform with Section 73, Concrete Curbs and Sidewalks and Section 90, Portland Cement Concrete, of the Caltrans Standard Specifications with the following additions: Portland cement concrete, concrete reinforcement, and various materials, services, and incidentals pertaining thereto shall conform to Section 03 15 00, Concrete Accessories, Section 03 20 00, Concrete Reinforcing, Section 03 30 00, Cast-In-Place Concrete, and Section 03 35 00, Concrete Finishing.

1.03 REFERENCES

A. American Concrete Institute (ACI):

1. ACI 117 Standard Specification for Tolerances for Concrete Construction Materials

2. ACI 301 Standard Specifications for Structural Concrete

3. ACI 318 Building Code Requirements for Reinforced Concrete

B. American Society for Testing and Materials (ASTM):

1. ASTM A53 Specification for Pipe, Steel, Black and Hot-Dipped, Zinc-Coated, Welded and Seamless

2. ASTM A615 Specification for Deformed and Plain Billet-Steel Bars for Concrete Reinforcement

3. ASTM A663 Specification for Steel Bars, Carbon, Merchant Quality, Mechanical Properties

4. ASTM C260 Specification for Air-Entraining Admixtures for Concrete

5. ASTM C309 Specification for Liquid Membrane-Forming Compounds for Curing Concrete

6. ASTM C881 Specification for Epoxy-Resin-Base Bonding Systems for Concrete

C. City of Fairfield Standard Specification and Details

1.04 SUBMITTALS

A. General: Refer to California Department of Transportation (Caltrans), Standard Specifications (2010), Section 5, Control of Work for submittal requirements and procedures.

B. Product Data: Submit the respective manufacturer's product data for manufactured products.

C. Shop Drawings:

1. Submit drawings that indicate the section profile of curb and gutter, and the locations of joints in concrete, including construction joints, expansion joints, isolation joints, and contraction joints.

2. Submit drawings of extruded curbs and gutters, if proposed, and any modification of the indicated section profile required by the extrusion process.

3. Submit drawings of reinforcing steel, tie bars, and connecting dowels. Comply with requirements specified in Section 03 20 00, Concrete Reinforcing.

1.05 QUALITY ASSURANCE

A. Tolerances:

1. Construct concrete surfaces within 1/4 inch of the indicated elevation, and deviating not more than 1/8 inch from a 10-foot straightedge placed anywhere on the surface.

2. Slab tolerances shall be “straightedge tolerance” as specified in ACI 117.

B. Finishes: Slab finishes shall be as specified herein in accordance with the requirements of ACI 301.

C. Site Mock-Ups: Provide site mock-up, in accordance with California Department of Transportation (Caltrans), Standard Specifications (2010), Section 5, Control of Work, at least 3 feet by 4 feet in size, of slab finishes for walks, for the Engineer's review and approval. Site mock-ups require approval of the Engineer in writing before this work may proceed.

PART 2 - PRODUCTS

2.01 MATERIALS AND ACCESSORIES

A. Concrete Reinforcement: Refer to Section 03 20 00, Concrete Reinforcing, for requirements.

B. Portland Cement Concrete: Refer to California Department of Transportation (Caltrans), Standard Specifications (2010), Section 90, Concrete, for requirements. All curb, gutter and sidewalk shall shall be constructed of 3000 psi portland cement concrete.

C. Benches and Chairs: ACI 318.

D. Tie Bars: ASTM A615, Grade 60, of type and size indicated.

E. Dowels: Plain round bars meeting requirements of ASTM A615, Grade 60, or ASTM A663, Grade 80, epoxy-coated bars, furnished with approved snug-fitting ASTM A53 galvanized pipe sleeve. Provide sleeve with one end closed.

F. Weep Holes: ASTM A53 galvanized pipe of size indicated.

G. Expansion-Joint Filler and Joint Sealing Compound: Refer to Section 03 15 00, Concrete Accessories, for requirements.

H. Surfacing Material for Nonslip Finish: Refer to Section 03 35 00, Concrete Finishing, for requirements.

I. Concrete Curing Compound: ASTM C309, Type 1.

J. Epoxy Adhesive: ASTM C881, Type V for load-bearing concrete, Grade and Class as determined by project conditions and requirements.

K. Cushion: Shall be mechanically compacted Class 2 Aggregate Base.

PART 3 - EXECUTION

3.01 PREPARATION OF SUBGRADE

A. Excavate for and prepare the sub grade as specified in Section 31 00 00, Earthwork, true to the indicated grade and cross section.

B. Test completed sub grade for correct grade and cross section by means of template supported on side forms.

C. Dampen sub grade and forms just before placing concrete.

D. The finished subgrade immediately prior to placement of aggregate base shall be compacted to 92% for a depth of 0.5 feet.

3.02 TYPES OF CONSTRUCTION

A. All curb, gutter, valley gutter and sidewalk shall be placed monolithically unless otherwise specified.

B. Provide cast-in-place concrete construction, plain or reinforced as indicated. Curbs, gutters and valley gutters, shall be formed accurately to the indicated section profile with template screed.

C. Use of an extrusion machine is allowed. A test pour may be required by the City Engineer. All edges shall have smooth even lines in both the horizontal and vertical plane. The grade tolerance is the same as formed concrete..

3.03 JOINTS

A. Expansion Joints:

1. Construct 3/8-inch to 1/2-inch thick expansion joints in the following locations unless otherwise noted:

a. In curb and combination curb and gutter at the locations of expansion joints in the concrete roadway.

b. In curb or combination curb and gutter, at points where curved and tangent sections join.

c. Between curb or combination curb and gutter, and any drain inlet, or similar structure occurring within the limits of the curb or combination curb and gutter.

d. At corners in sidewalks, following the projections of the building lines from the corner of the building to the curb.

e. Between sidewalks and any permanent structure.

f. Between sidewalk and curb.

g. Through sidewalks at intervals not greater than 15 feet.

h. In sidewalks, encircling fixtures more than 12 inches in diameter.

2. Construct expansion joints as specified in Section 32 13 13, Concrete Paving, except that load transfer devices will not be required unless indicated. Shape preformed filler to cross section of curbs and combination curb and gutter.

B. Contraction Joints: In sidewalks, provide contraction joints as indicated in uniform intervals not greater than 6 feet, with the edges rounded to a 1/4-inch to 3/8-inch radius.

C. Tooling: Finish joints with an edging tool having 1/4-inch to 3/8-inch radius, leaving joints free of mortar and concrete. In preformed type joints, leave joint filler material exposed for full length of joint with clean and true edges.

D. Joint Sealing:

1. Seal to within 1/8 inch of pavement surface joints in curbs and gutters, including gutter surfaces of combination curb and gutter sections; all joints between curbs and vehicular pavement; all joints between gutters and vehicular pavement; and all other expansion joints. Do not seal other joints unless so indicated.

2. Do not seal joints until concrete curing is complete. Prior to installation of the joint sealing compound, clean the joints of dirt and other foreign material. Joints may be cleaned with compressed air jets provided that the air in such jets is free of oil or water. Do not fill joints when there is any free water in or adjacent to the joints. Joint walls and all surfaces to which the sealing material is to adhere shall be surface dry for at least three hours prior to sealing.

3. Apply with approved pressurized equipment. Perform sealing of joints to make them impervious to water and to prevent the sealing compound from spreading over the surface of the pavement.

3.04 FORMS

A. Lumber used for forms must be surfaced on the side placed next to the concrete and shall not be less than 1-1/2 inches thick after being surfaced. Warped forms and forms not having a smooth, straight upper edge shall not be used. Benders or thin planks, rigidly placed, may be used on curves, grade changes, or the curb returns.

B. All forms shall be clean and coated with a light anti-bonding oil to prevent the concrete from adhering to them. All forms must be carefully set to proper alignment and grade and shall be rigidly held in place by the use of steel or wooden stakes. Clamps, spreaders and braces shall be used where required to insure rigidity in the forms.

C. Forms shall not vary from vertical grade by more than 0.02 feet and from horizontal alignment by more than 0.05 feet within the distance not to exceed 25 feet at each occurrence. Unnecessary meandering of the alignment shall be sufficient cause for rejection and removal. All forms shall have smooth even lines in both the horizontal and vertical plane. A windrow of earth placed against the forms prior to placing concrete may be required to prevent them from bulging.

D. Form Removal.

1. Remove front curb forms not less than two nor more than six hours after placing concrete, but in no case while the concrete is still plastic enough to slump.

2. Remove other forms not less than twelve hours after finishing is completed.

3.05 PLACING and FINISHING

A. No concrete shall be placed or finished in the rain. It shall be the contractor's responsibility to schedule his operations such that concrete will not be placed or finished in the rain.

B. Finished concrete shall have a high quality appearance. Defects such as crooked joints, exposed aggregate, surface pitting, or excessively rough finish will be cause for rejection. Removal and replacement will be done at Contractor’s expense.

C. Placement of driveways and handicap ramps require careful journeyman quality finishing. Through the driveway flowline a tangent line should be projected from full curb to full curb to assure that the 1" driveway lip does not 'encroach' into the flowline. The longitudinal curbline extension score line through the driveway shall be 6" from flowline. To assure positive flow, driveways and handicap ramps will be flow tested during installation.

D. At the end of each day's pour, when work is terminated, or when a delay of more than 30 minutes occurs, a construction joint, consistent with the jointing pattern, shall be made vertical or square ended and shall end the work. In no case shall the end of a day's pour terminate in a driveway or handicap ramp.

E. Curb, Combination Curb and Gutter and Valley Gutter:

1. Trowel the face of curb smooth to a depth of not less than 2 inches below the flow line, or to the flow line of integral curb and gutter, and finish with a steel trowel, all immediately after removal of front curb forms.

2. Finish all curb edges with a radius of 1/2-inch or as noted on plans.

3. Provide a final fine brush finish to both top and face of curb with brush strokes parallel to the line of the curb, so that both top and front face present the same uniform appearance.

4. Keep the curb face wet during above finishing operations.

5. Allow no coarse aggregate to show on the finished curb surface.

F. Sidewalk, Median Paving, and Ramps:

1. After the concrete has been placed, consolidated, struck off, leveled, grooved and edged as specified herein and in Section 03 30 00, Cast-In-Place Concrete, and in Section 03 35 00, Concrete Finishing, do not work the concrete further until ready for floating.

2. Provide "floated finish" or light "broom finish" as indicated in accordance with the requirements of ACI 301.

3. For pedestrian and wheelchair ramps, and all other surfaces where the Contract Drawings require a non-slip finish, provide a "nonslip finish" in combination with a "floated finish" or "broom finish" in accordance with the requirements of ACI 301.

4. Broom finish shall be applied perpendicular to the direction of traffic flow.

G. Joints and Edges: As soon as the condition of the work permits, perform joint work, edging, and marking. Weakened plane joints and score lines shall be constructed according to the standard details, and at right angles to the curb line.

3.06 CURING AND PROTECTION

A. Comply with the applicable requirements of Section 03 35 00, Concrete Finishing, for curing concrete with liquid membrane-forming curing compound. Do not permit traffic on new concrete pavement until the concrete has cured a minimum period of ten days.

B. Provide damp curing only, in accordance with Section 03 35 00, Concrete Finishing, for concrete slab surfaces indicated to be treated with concrete hardener and dust proofer.

3.07 FIELD QUALITY CONTROL

A. The Contractor shall perform inspections and tests as specified in California Department of Transportation (Caltrans), Standard Specifications (2010), Section 90, Concrete. The Contractor shall provide such samples and services to facilitate testing as specified in California Department of Transportation (Caltrans), Standard Specifications (2010), Section 90, Concrete.

B. After construction, gutters shall be checked by flowing water. The Engineer or his representative must be present during the flow test. Any high spots or depressions revealed by the flow test (which exceed 0.02 foot) shall be repaired by removing that section of concrete and replacing it to the correct grade.

C. Finished face of curb shall not vary by more than an aggregate total of 0.05 foot from the design alignment within a distance not to exceed 25 feet at each occurrence. Unnecessary meandering of the alignment shall be sufficient cause for rejection and removal.

END OF SECTION 32 16 21

This Page Not Used

SECTION 321713

PARKING BUMPERS

PART 1 - GENERAL

1.01 SECTION INCLUDES

A. Parking bumpers.

B. Adhesive.

C. Steel bars for installation.

1.02 REFERENCES

A. State of California, Department of Transportation (Caltrans), Standard Specifications, 1992 edition:

1. Section 95 Epoxy

1.03 SUBMITTALS

A. General: Refer to California Department of Transportation (Caltrans), Standard Specifications (2010), Section 5, Control of Work, for submittal requirements and procedures.

B. Shop Drawings: Submit Shop Drawings of bumpers, including plan layout and installation details, for approval.

C. Product Data: Submit manufacturers' product data of precast bumpers and epoxy adhesive for approval.

1.04 QUALITY ASSURANCE

A. Precast parking bumpers shall be manufactured for the intended purpose by a company or firm specializing in the manufacture of precast concrete parking appurtenances.

PART 2 - PRODUCTS

2.01 MATERIALS

A. Parking Bumpers:

1. Provide precast concrete parking bumpers of half octagonal configuration and dimensions indicated. Unless indicated otherwise, provide bumpers of 36-inch length.

2. Bumpers shall be manufactured of Class 4000 reinforced concrete, as specified in California Department of Transportation (Caltrans), Standard Specifications (2010), Section 90, Concrete, to withstand constant use and rough service. Each bumper shall be reinforced with two No. 4 deformed steel reinforcing bars, minimum.

3. Each bumper to be installed on at-grade asphalt pavement shall be manufactured with two holes to accommodate the installation rebar. Holes shall be positioned 6 inches in

from each end.

4. Bumpers to be installed on concrete slabs of parking structures, shall be manufactured without holes.

B. Adhesive: Adhesive for anchoring bumpers or wheel stops to pavement shall be an epoxy adhesive manufactured for the purpose, similar and equal to the adhesives specified in Section 95 of the Caltrans Standard Specifications, Article 95-2.04 or 95-2.05.

C. Steel Bars for Installation: Epoxy-coated rebar, No. 5 size, conforming with applicable requirements of Section 03 20 00 - Concrete Reinforcing.

PART 3 - EXECUTION

3.01 INSTALLATION

A. Precast concrete bumpers shall be anchored and secured in position on at-grade asphalt pavements, as indicated, with two No. 5 epoxy-coated rebar and an appropriate epoxy adhesive as specified in Article 2.01.B herein.

B. Precast concrete bumpers shall secured in position on at-grade concrete pavements, as indicated, with an appropriate epoxy adhesive as specified in Article 2.01.B herein.

END OF SECTION 32 17 13

SECTION 321723

PAVEMENT MARKINGS

PART 1 - GENERAL

1.01 SECTION INCLUDES

A. Traffic line paint.

B. Application of traffic striping and control markings.

1.02 RELATED SECTIONS

A. Asphalt pavement is specified in Section 32 12 16 - Asphalt Paving.

B. Concrete pavement is specified in Section 32 13 13 - Concrete Paving.

C. Concrete curbs, gutters, and walks are specified in Section 32 16 21 - Concrete Curbs, Gutters, and Walks.

D. All other painting is specified under Division 9, Finishes.

1.03 REFERENCES

A. State of California, Department of Transportation (Caltrans), Standard Specifications, 1992 edition:

1. Section 84 Traffic Stripes and Pavement Markings

B. California Air Resources Board (CARB):

Latest regulations governing permissible content of Volatile Organic Compounds (VOC) in paints

1.04 SUBMITTALS

A. General: Refer to California Department of Transportation (Caltrans), Standard Specifications (2010), Section 5, Control of Work, for submittal requirements and procedures.

B. Shop Drawings: Submit drawings and diagrams, indicating stripe width of roadway divider stripes and parking stalls, configuration and dimensions of directional arrows, style and size of letters for "compact car" designation, configuration and dimensions of international handicapped symbol, and any other traffic control markings on pavement, such as "in" and "out" or "enter" and "exit" designations as indicated.

C. Certificate of Compliance: Submit evidence or affidavit that certifies that paint to be used complies with latest CARB/VOC regulations.

PART 2 - PRODUCTS

2.01 MATERIALS

A. Traffic Line Paint: Provide paint conforming with the requirements of Section 84-3 of the Caltrans Standard Specifications, white in color for traffic striping, parking stalls, and other

control markings on pavement, yellow in color for traffic control markings where indicated, blue in color for accessible parking stalls, red in color for curbs where no parking is indicated, white in color for curbs where passenger discharge and pickup are indicated, and white-yellow-green striping on curbs where taxicab parking is indicated.

1. Provide glass beads only for traffic stripes and control markings on road or street pavements.

B. Plaza Pavement Markings: Provide durable, white, anti-slip paint from Richco International Products, Inc., or Rust-oleum Industrial Flooring “Tough and Easy”, or approved equal.

PART 3 - EXECUTION

3.01 APPLICATION

A. Provide traffic striping and control markings on pavement and parking stalls in accordance with the layout, configurations, and dimensions indicated on the Contract Drawings and approved Shop Drawings.

B. Paint application equipment shall conform with the applicable requirements of the Caltrans Standard Specifications.

C. Traffic control markings and parking stalls shall be applied with the use of substantial cutout patterns and templates, or with striping equipment that applies straight, uniform width, sharp lines. Coverage of paint shall be thorough and complete in accordance with the paint manufacturer's instructions and recommendations.

D. Where "enter" and "exit" control markings are side-by-side on pavements, indicating two-way traffic, such "enter" and "exit" designations shall be different colors, such as white and yellow, with a centerline separating the two directions of traffic.

E. Traffic control markings and parking stalls shall be sharp and accurate, straight where required, without fuzziness at edges of lines.

F. Accessible parking stalls shall include the International Symbol for Accessibility.

G. At completion, the Contractor shall check the work thoroughly and shall touchup traffic control markings and parking stalls that are not distinct or thorough in coverage, or are not uniform in color.

END OF SECTION 32 17 23

SECTION 321726

DETECTABLE WARNING TACTILES

PART 1 – GENERAL

1.01 DESCRIPTION

A. This Section includes specifications for detectable warning tactile and curb ramp detectable warning surface.

1.02 REFERENCE STANDARDS

A. ASTM International (ASTM):

1. B117 Practice for Operating Salt Spray (Fog) Apparatus
2. C501 Test Method for Relative Resistance to Wear of Unglazed Ceramic Tile by the Taber Abraser
3. C1028 Test Method for Determining the Static Coefficient of Friction of Ceramic Tile and Other Like Surfaces by the Horizontal Dynamometer Pull-Meter Method
4. 0570 Test Method for Water Absorption of Plastics
5. 0638 Test Method for Tensile Properties of Plastics
6. 0695 Test Method for Compressive Properties of Rigid Plastics
7. 0790 Test Methods for Flexural Properties of Unreinforced and Reinforced Plastics and Electrical Insulating Materials
8. 01308 Test Method for Effect of Household Chemicals on Clear and Pigmented Organic Finishes
9. 05420 Test Method for Impact Resistance of Flat, Rigid Plastic Specimen by Means of a Striker Impacted by a Falling Weight (Gardner Impact)
10. E84 Test Method for Surface Burning Characteristics of Building Materials
11. G26 Practice for Operating Light-Exposure Apparatus (Xenon-Arc Type) With and Without Water for Exposure of Nonmetallic Materials (Withdrawn 2000, replaced by G155)

B. Americans with Disabilities Act (ADA) and Architectural Barriers Act (ABA)

C. Caltrans Standard Plan A88A and A88B

1.03 SUBMITTALS

A. Shop Drawings: Submit shop drawings showing fabrication details; panel surface profile; fastener locations; plans of panel placement including joints, and material to be used as well as outlining installation materials and procedure. Include procedures for containment and disposal of milling and sawcutting waste water.

1. The shop drawings do not require a full dimensional layout of the platform edges.

B. Product Data: Submit manufacturer's literature describing products and installation procedures. Include product data for adhesives and sealants.

C. Samples: Submit the following samples:

1. Samples of panels measuring at least 12 inches x 12 inches. Panel sample shall include longitudinal edge with integral flange and transverse ship-lap edges.

2. Samples of panels and sealant for verification of color match.

D. Samples for Verification Purposes: Submit panels of the kind proposed for use.

E. Maintenance Instructions: Submit manufacturer's specified maintenance practices for each type of panel and accessory as required.

F. Quality Assurance Submittals:

1. Material Test Reports: Submit test reports from qualified independent testing laboratory indicating that materials proposed for use are in compliance with requirements and meet the properties indicated. Tests which indicate performance for the panels shall have been performed within 3 years of the Invitation to Bid.

2. Submit list of projects in California that successfully demonstrate the proposed products' durability and weatherability.

1.04 QUALITY ASSURANCE

A. Provide panels and accessories, including panel adhesive, fasteners, and sealants, shall be from a single source. Products shall have been in successful service for a period of five (5) years.

B. Installer’s Qualifications: Engage an experienced Installer certified in writing by panel manufacturer as qualified for installation, who has successfully completed panel installations similar in material, design, and extent to that indicated for Project. Only persons who are thoroughly trained and experience in the installation of the panels shall perform the work.

C. Provide services of manufacturer's field representative who shall be present at all times during installation.

1.05 DELIVERY, STORAGE AND HANDLING

A. Panel type shall be identified by part number on packages.

1.06 SITE CONDITIONS

A. Environmental Conditions and Protection: Conduct field operations only when environmental conditions fall within those recommended by manufacturers of the products.

1.07 WARRANTY

A. Detectable warning tactile and curb ramp detectable warning surface shall be covered by a written warranty for a period of five years from date of final acceptance. The warranty includes defective work, breakage, and deformation, delamination, fading and chalking of finishes, and loosening of tactiles. Warranty shall include furnishing new materials, removal of existing tactiles, and installation of new tactiles.

1.08 EXTRA STOCK

A. Furnish not less than five (5) percent additional panels of the total amount installed of each panel and corresponding fasteners. Deliver extra stock to location (within 30 mile radius of work site) designated by the Engineer. Furnish extra stock materials from same manufactured lot as materials installed and enclose in protective packaging with appropriate identification.

PART 2 - PRODUCTS

2.01 PANELS

A. Manufacturers: Subject to conformance with the requirements of this Section, use products fabricated by the following manufacturers or equal:

1. Transit-Tile of Boulder, CO

2. Armor-Tile by Engineered Plastics, Inc. of Williamsville, NY

3. ADA Solutions, Inc. of North Billerica, MA

B. Detectable warning tactile and curb ramp detectable warning surface shall be homogenous glass and carbon reinforced composite or an epoxy polymer composition which is colorfast and UV stable. Color shall be homogenous throughout tactile. Color shall be Federal Yellow.

C. Truncated Dome Geometry:

1. Truncated dome surface shall comply with ADA and ABA guidelines, 705, Detectable Warnings. (Title 49 CFR Transportation, Part 37.9 Standards for Accessible Transportation Facilities, Appendix A, Section 4.29.2 - Detectable Warnings on Walking Surfaces).

2. Truncated Dome Description:

a. Staggered Dome and In-Line Patterns: The truncated dome shall measure a nominal 0.45 inch diameter at the top of the truncated dome, 0.90 inch diameter at the base of the truncated dome, 0.20 inch high, and 2.35 inch on center, staggered or in-line pattern.

b. In order to ensure a uniform appearance of the detectable warning surface throughout the transit system, equivalent facilitation findings or alternate patterns will not be acceptable.

3. Truncated dome pattern shall align properly from Tactile to Tactilel.

D. Panel Configuration:

1. Standard Detectable Warning Tactile - Butt Joint, Staggered Truncated Domes: Nominal 24 inches x 48 inches x 3/8 inches thick with a 7/16- inch thick deep flange along both 4 foot sides unless noted otherwise on the Contract 0rawings. The perimeter of the standard panel features a chamfer (no 90 degree return).

2. The detectable warning tactile shall feature a butt joint detail from tactile to tactile. Alternatively a ship lap detail may also be furnished.

E. Fastener Holes in the Panel:

1. Holes for fasteners shall be formed in the factory. Holes for fasteners, whether made in the factory or in the field, shall be located only at the centers of the truncated domes.

F. Detectable warning tactile and curb ramp detectable warning surface comply with the following performance characteristics. Alternatively, products complying with the performance characteristics specified in California Department of Transportation (Caltrans), Standard Specifications (2010), will be acceptable if the panel configuration described in this Section is furnished.

Property	ASTM Test Method	Nominal Value
Accelerated Weathering (3,000 hours)	G26	Delta E maxd. Of20
Chemical Resistance	01308	No Stain
Flexural Strength	0790	min. of 20,000psi
Compressive Strength	0695	min of 20,000psi
Tensile Strength	0638	min of 10,000psi
Gardner Impact Test	05420	min. of 110 in-lb
Flame Spread	E84	FSI of less than 25 S0I of less than 150
Slip Resistance	C1028	min of 0.80
Wear Resistance	C501	min of 500
Water Absorption (2 weeks)	0570	Less than 0.20%
Salt Spray (120 hours)	B117	No Change

2.02. ACCESSORIES

A. Fasteners for Concrete: Color matched nylon expansion sleeves with 1/4 inch diameter by 1-1/2 inches long stainless steel drive pins or as recommended by panel manufacturer for specific job conditions and accepted by the Engineer.

B. Adhesive: Type approved by the panel manufacturer.

C. Sealant: Urethane sealant of type approved by the panel manufacturer.

D. Backer Road: Acceptable to sealant manufacturer where required, such as at platform expansion joints.

PART 3 - EXECUTION

3.01 INSTALLATION

A. Apply adhesives, sealants and mechanical fasteners in strict accordance with the guidelines set by their respective manufacturers.

B. Utilize manufacturer-provided template to lay out area to receive tactiles.

C. Form recess for tactiles by either milling with diamond blade head or casting recess in place (at new paving) so that installed tactile will still flush relative to adjacent surface. Grind or form to the depth and width required by the approved shop drawings and manufacturer's instructions. Finish cast-in-place recess with equivalent of a light broom finish. When milled, substrate shall have a light ribbed finish.

D. Contain and remove slurry resulting from concrete milling and sawcutting. Do not wash slurry into track bed area.

E. For Tactiles with Recessed Flanges:

1. Utilize diamond bladed double headed wet saw to achieve parallel grooves to receive panels. Both sawcuts shall be made simultaneously from the same machine. Sawcut parallel to platform edge.

2. After sawcutting, vacuum and power wash surface with clean clear water, free from all dirt and debris. Visually inspect surface for obtrusions or foreign matter. If obtrusions are present, remove by grinding. Remove foreign matter by grinding or further washing, as appropriate.

F. Immediately prior to application of the setting adhesive, inspect surfaces to receive tactile to ensure that they are clean, dry, free of voids, curing compounds, projections, loose material, dust, oils, grease, sealers, and other contaminants. Verify that surfaces are structurally sound and that concrete has cured a minimum of 30 days. Obtain tactile manufacturer's representatives and Engineer's approval of surface preparation before installing panels.

G. Set tactiles and install fasteners in accordance with tactile manufacturer’s instructions and as follows:

1. Wherever possible, install full size (uncut) tactiles. Do not install tactile sections measuring less than 24 inches in length. Only cut tactiles where absolutely necessary.

2. Maintain gap between tactiles for expansion and contraction in accordance with manufacturer's instructions.

3. At platform expansion joints, cut tactiles on their short sides, finish cut edges smoothly, and lay tactiles with cut edges aligned with the edges of the substrate along the joints. Install fasteners on either side of the expansion joint at the time of initial installation. After a minimum of 4 hours, make a sawcut measuring 5/16 inch wide across the composite detectable warning tactile and fill with sealant. Make sawcut in the zone between truncated domes.

   a. Where there is platform curvature, composite detectable warning tactiles shall be treated in a similar manner so that the joints remain uniform across the width of the joint between successive tactiles. However, in areas of platform curvature, the joint shall take on somewhat of a triangular configuration.

4. Cutting through tactile domes shall be kept to a minimum. Where less than half of the truncated dome remains, grind off balance of dome; where over half of the truncated dome remains, feather dome so as not to present a tripping hazard.

H. Install sealant in accordance with manufacturer recommendations.

I. Installation of curb ramp detectable warning surface must comply with the manufacturer's recommendations.

3.02 CLEANING AND PROTECTING

A. After the area has been fully tactiled and sealant system applied, clean panel surface, following the manufacturer recommended maintenance and cleaning procedures.

B. Protect sealant and tactiles against damage during construction period. Comply with tactile and sealant manufacturers' recommendations.

C. Protect tactiles against damage from rolling loads following installation by covering with plywood or hardwood.

D. Clean and protect curb ramp detectable warning surface against damage following the manufacturer's recommendations.

END OF SECTION

THIS PAGE INTENTIONALLY LEFT BLANK

SECTION 321813

SYNTHETIC LAWN

PART 1 - GENERAL

1.1 SUMMARY

A. Section Includes: Synthetic Lawn Surfacing

1.2 SUBMITTALS

A. Prior to installation, contractor to provide the following information:
   1. Standard printed specification of the synthetic surfacing system that is being installed.
   2. Letter from synthetic surfacing manufacturer approving the installer/applicator of the synthetic lawn.
   3. Shop Drawings: Indicate details necessary for complete fabrication and installation, including spacing and sizes of connections and members, finishes of members, and other necessary information.
   4. Samples: Submit samples of finishes and colors of materials for approval by Engineer.

B. Upon completion of specified work, contractor to provide closeout submittals as listed below.
   1. Manufacturer's Warranty of ten (10) year minimum.
   2. Provide a Care and Maintenance manual for the Owner's use for future maintenance of the synthetic lawn.

1.3 QUALITY ASSURANCE

A. Materials shall be guaranteed to the extent that the surfacing has been manufactured, applied, and will perform in accordance with the manufacturer's specifications.

B. Synthetic Lawn contractor shall, in the presence of the owner, inspect the installed product as required by the owner throughout the duration of the warranty period. Defects in workmanship or materials shall be repaired by the contractor at no cost to the owner.

PART 2 - PRODUCTS

2.1 SYTHETIC LAWN

A. Basis of Design: SynLawn SF351, attached, or approved equal.

2.2 MODULAR MOLDED PLASTIC TILE SUBSTRATE

A. Basis of Design: VersaCourt Game Court Tiles, attached, or approved equal.

PART 3 - EXECUTION

3.1 EXAMINATION

A. Examine conditions and proceed with work when substrates are ready.

B. Inspect drainage conditions and confirm plumbing is operational prior to installation of synthetic lawn.

3.2 INSTALLATION

A. Install in accordance with approved shop drawings.

B. Installation shall be performed only by manufacturer approved contractors.

3.3 PROTECTION

A. Protect finishes from damage during remaining construction by use of temporary protective coverings as approved by manufacturer. Remove protective covering at project completion. Restore finishes damaged during installation and construction period.

END OF SECTION

05/03/13 PERMIT SET

SYNLAWN®

866-796-5296

PRODUCT NAME

SF351

MATERIALS

Primary Yarn Polymer	Polyethylene w/Heat Block™ Technology
Yarn Cross Section	Horseshoe Monofilament
Standard Color	Field Green/Lime
UV Stabilized	Yes
Fabric Construction	Tufted
Secondary Yarn Polymer Thatch	Polyproplyene
Secondary Yarn Color	Turf Tan
Primary Backing	SLC02
Coating Type	Enviroloc™ Plus
Polyethylene Yarn Denier / Ends	10,800/6
Texturized Thatch Denier / Ends	5040/12
Sustainability	100% Recyclable
Warranty Period	***10 years***

Finish Fabric	**English System**		**Metric System**		**ASTM Test F-1551**
Nominal Specification	***Value***	***Units***	***Value***	***Units***	***Method***
Pile Height (Nominal)	2	inches	5.08	cm	D-5823
Face Weight	78	oz/yd²	2581	g/m²	D-5848
Total Fabric Weight	106	oz/yd²	3508	g/m²	D-5848
Primary Backing Weight	8	oz/yd²	265	g/m²	D-5848
Secondary Coating Weight	20	oz/yd²	662	g/m²	D-5848
Tuft Bind	>8	lbs.	>3.63	kg	D-1335
Grab Tear Strength (Average)	>200	lbs.	>91	kg.	D-5034
Lead Safe	<50	ppm	<50	ppm	F-2765
Total Yarn Linear Density	15,840	Denier	17,424	dtex	D-1577
Elongation to Break	>60	%	>60	%	D-2256
Yarn Breaking Strength	>19	lbs.	>8.62	kg	D-2256
Yarn Melting Point	248	F°	120	C°	D-7138
Stitch Rate	3	in	7.62	cm	D-5793
Machine Guage	3/8	inches	0.9525	cm	D-5793
Flammability	Test Passed		Test Passed		D-2859
Water Permeability	>30	in/hr	>76.2	cm/hr	DIN 18-035
Fiber Thickness (Primary / Secondary)	3.9	mils	100	microns	D-3218
Fabric Width	15	ft	4.6	m	None

Note: Any change from the specified values is considered a special product that will require confirmation from manufacturing. All values are ± 5%.

2/17/2012

SPECIFICATIONS

VersaCourt from VersaCourt International

Part 1 — General

1.01 Description

A. Scope of work

Furnishing of materials for the flooring system described below. The flooring is a modular interlocking suspended plastic tile system. Includes installation, application of game lines, and maintenance instructions for the flooring system.

B. Related Work Specified Elsewhere

1. Installation of concrete, asphalt, or other base material.
2. Preparation of base to provide a medium broom surface finish with tolerances of (±) or (-) Y4" in any 10' radius.
3. Membrane waterproofing as determined by the project engineer.

Part 11 — Warranties

2.01 Manufacturer's Limited Warranty

A. VersaCourt game tiles shall be warranted by the manufacturer for any defects in materials and workmanship for a period of **15** years from the date of purchase as set forth in the manufacturer's standard limited warranty.

2.02 Installers

A. Installer shall provide a one (1) year warranty on his workmanship as it pertains to the installation of the modular flooring and accessories.

Part 111 — Product

3.01 Materials

A. VersaCourt Game Court Tiles

1. Description —An injection molded, high impact plastic tile supplied in pre-assembled 4 units by 4 units sheets.
2. Size — 10.13" x 10.13", 3/4" thick
3. Material — Specially blended high impact polypropylene copolymer. UV stabilizer and anti-oxidant additives are molded into each tile to insure protection against color fade and plastic deterioration & oxidations. The tile also have an anti-static additive which reduces static buildup on players on court.
4. Surface Texture — Specially designed open grid that provides a high grip surface in all weather conditions.
5. Tile Interlocking Mechanism — The tile interlocking system is designed to allow for thermal expansion and,contraction with out causing the surface to buckle. It also provides the player with lateral forgiveness.
6. Colors —Available colors are: Medium Green, Rust Red, Burgundy, Dark Green, Yellow, Royal Blue, White, Turquoise, Navy Blue, Graphite, Purple, Gray, Bright Red, Black, Hunter Green, Orange, Light Blue and Sand.
7. Support Structure — Each tile is supported by 155 cross posts. This provides a stable base while at the same time vertical flex.
8. Weight — 7 oz.

B. VersaCourt Line Tiles

1. Description — An injection molded, high impact plastic line tile. Used to inlay straight lines in a court.
2. Size 10.13" x 2" x 3/4" thick
3. Material — Same as tile
4. Surface Texture — Same as tile
5. Tile Interlocking Mechanism — Same as tile
6. Colors — Same as tile
7. Support Structure — Same as tile

8, Weight — 1.5 oz.

C. VersaCourt Ramp Tiles

1. Description —An injection molded, high impact plastic ramp tile. Used around the edge of court as ramp from ground to tile level.
2. Size —10.13" x 2" x 3/4" thick
3. Material — Same as tile
4. Surface texture — Smooth

5. Tile Interlocking Mechanism — Same as tile
6. Colors — Same as tile
7. Support Structure — Same as tile
8. Weight — 1.6 oz.

D. Line Stripe Painting
1. Primer- Used to promote adhesion between the tile surface and the paint.
2. Paint — Used to mark the playing lines required in various sports.
3. Logos — Custom logos may also be painted onto the surface of the tile.

Part IV - Physical Properties

4.01 Material Test Results
A. Rockwell hardness (ASTM D 785): 83
B. Heat Deflection @ .455 MPa (ASTM E 648)· 194
C. Flaming at 1000mm (ASTM E 648): 4 min 45s
D. Auto-ignition temperature (ASTM D-1929): 980°F
E. Vicat softening point (ASTM D-1525): 260°F
F. Low Temperature Brittleness (ASTM D-2137): -25F
G. Coefficient of Linear Thermal Expansion, (ASTM D-696, E-831): 63 x 10-6 (in/in)rF
H. E-Modulus (ASTM 0-5418) 126,000 psi (850MPa)
I. Flex Modulus (ASTM D-790) 122,000 psi
J. Tensile Yield Strength (ASTM 0-638) 3,250 psi
K. Elongation at Yield (ASTM D-638) 18%
L. Notched izod (ASTMD-256) 15 ft-lb / in at 20°C

4.02 Product Test Results

A. Flame Spread Index (ASTM E-162): 4 min. 30 sec.
B. B. Smoke Development (ASTM E-162): 1 min. 46 sec.
C. Radiant Panel (ASTM E-84,162,648): .12 Watts/cm^2
D. Friction Test (ASTM C-1028): Dry<.71, wet<,52
E. Compression vs. Crush (ASTM 0-3998): No Break
F. Noise Reduction Coefficient (ASTM C-423): 25%
G. R-Value: < 1.0
H. Flatness: ± 1.5mm
I. Load Bearing Capacity: 180 psi

Part V - Execution

5.01 Installation
A. VersaCourt Game Tile
1. Game tiles will be installed according to pre-approved layout.
2. Game tiles will be installed and/or supervised according to manufacturers specifications by an authorized, factory trained dealer or representative.
B. Game line painting
1. Floor surface shall be clean, dry and free of debris.
2. Lines shall be primed using Klean Strip's Bulldog adhesion promoter and then painted using Sherwin Williams-Acrolon polyurethane paint.

5.02 Maintenance
A. Maintenance Procedure
1. It is recommended to keep the surface free of leaves, limbs and grass clippings by using a leaf blower. Every 2-3 years it may be necessary to pull the tile up and sweep out any dirt or debris that may have accumulated under the tile.

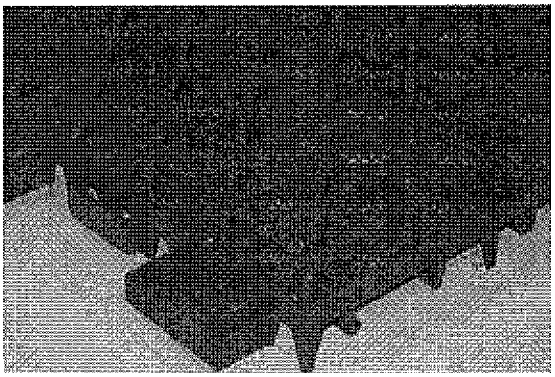

VersaCourt Tile

SECTION 323113

CHAIN LINK FENCES AND GATES

PART 1 - GENERAL

1.01 SECTION INCLUDES

A. Fencing, gate materials and synthetic panels.

B. Concrete.

C. Fence and gate installation.

D. Electrical grounding.

1.02 FENCE CLASSIFICATIONS AND STANDARDS

A. Fence Code: Type of fence, dimensions, components, gates, and accessories are indicated on the Contract Drawings.

B. Fence Types: Chain link fencing shall be of the types indicated as follows:

1. Type CL — Polyvinyl chloride (PVC) coated steel fence fabric with vinyl-coated and factory-painted steel posts, rails, caps, hardware, and fittings in black color.

C. Fence Standards:

1. Caltrans Standard Plan A85, A85A and A85B

1.03 REFERENCES

A. Chain link fence and gates shall be black vinyl-clad and shall conform to the provisions in Caltrans Standard Specifications, Section 80, Fences.

1.04 SUBMITTALS

A. Submittals for chain link fence and gates shall be black vinyl-clad and shall conform to the provisions in Caltrans Standard Specifications, Section 80, Fences. G B. Product Data: Submit manufacturer's product data and specifications of the specified chain link fencing, gates and privacy-windscreen synthetic panels.

C. Shop Drawings: Submit detailed Shop Drawings of the fences and gates layout, including installation details of the fencing, posts, gates, hardware, and accessories for review.

D. Samples: If PVC-coated fencing is indicated or specified including screen panels, submit manufacturer's color chart of available colors and physical sample of selected color.

PART 2 - PRODUCTS

2.01 MATERIALS

A. Requirements: Fencing shall include fabric covering, framework, privacy-wind screen panels concrete footings, gates, hardware, and all appurtenances and accessories as required for a complete installation. Heights of fences shall be as indicated.

B. Components:

1. Chain link fence fabric, components and gates shall be 11-gage, Type IV, Class B, bonded vinyl coated fabric, conforming to the requirements in AASHTO Designation: M 181. The color shall be black. Heights as noted on the construction plans.

2. The strength of the bond between the coating material and steel of the bonded vinyl coated chain link fabric shall be equal to or greater than the cohesive strength of the polyvinyl chloride (PVC) coating material.

3. Chain link fence Type CL-6 along the south boundary shall retain the existing posts. The posts shall be painted to match the fence fabric color coating.

C. Synthetic Screen Panel

1. Privacy wind screen panels on 10 foot high fence around transformer shall be synthetic material, polyethylene or similar, semi-open mesh, with color selected by owner to match IERBYS building. Product to be as listed, or approved equal.

   a. Fencescreen Windscreen Products, 26834 Vista Terrace, Lake Forest, CA 92630, Standard 200 series. (880.313.6313)

   b. Coversports.com, 5000 Paschall Avenue, Philadelphia, PA 19143, (800.445.6680), Fencemate Vinyl coated polyester, 600 series,

2. Privacy wind screen panels on 8 foot high fence along east property line shall be synthetic material, polyethylene or similar, tight knit woven closed mesh, with metal grommets, black color. Product to be as listed, or approved equal.

   a. Fencescreen Windscreen Products, 26834 Vista Terrace, Lake Forest, CA 92630, Standard 700 series. (880.313.6313)

2.02 CONCRETE

A. Concrete for chain link fence and gate footings shall conform to the provisions in Caltrans Standard Specifications, Section 80, Fences.

PART 3 - EXECUTION

3.01 PREPARATION

A. Preparation for installation of chain link fence and gates shall conform to the provisions in Caltrans Standard Specifications, Section 80, Fences.

3.02 INSTALLATION

A. Installation of chain link fence and gates shall conform to the provisions in Caltrans Standard Specifications, Section 80, Fences.

3.03 CONCRETE

A. Handling and placing of concrete shall conform to the applicable requirements of Section 03 30 00 - Cast-In-Place Concrete.

B. Place concrete around posts in a continuous pour. Check each post for plumb and vertical and top alignment, and hold in position during placement and finishing operations.

C. Trowel finish tops of footings, and slope or dome to direct water away from posts. Set keepers, stops, sleeves, tracks, eye bolts, and other accessories into concrete as required. Wheel rolling area for sliding gates shall be steel-trowel smooth finish concrete.

3.04 ELECTRICAL GROUNDING

A. Electrical groundings for chain link fence and gates shall conform to the provisions in Caltrans Standard Specifications, Section 80, Fences.

END OF SECTION 32 31 13

SECTION 330528

TRENCHING AND BACKFILLING FOR UTILITIES

PART 1 - GENERAL

1.01 SECTION INCLUDES

A. Bedding and Backfilling materials.

B. Staking and grades.

C. Existing Utilities.

D. Trenching and excavating.

E. Bedding and backfilling

F. Trench borrow backfill with or without AC paving

G. Field quality control

1.02 DESCRIPTION

A. This section includes the requirements for excavating, trenching, backfilling and borrow backfilling with or without AC paving for installation of new utilities, pipe casings, and related structures, as indicated, including utility manholes and concrete encasement.

B. Trenching and backfilling and borrow backfilling with or without AC paving for utilities include restoration of existing facilities, where applicable, to the existing condition prior to excavation.

1.03 RELATED SECTIONS

A. Section 31 23 19, Dewatering

B. Section 31 00 00, Earthwork

C. Section 32 12 16, Asphalt paving

D. Section 33 05 25, Support and Protection of Utilities

E. Section 33 05 35, Protection, Removal and Abandonment of Utility Pipes

1.04 REFERENCE STANDARDS

A. American Society for Testing Materials (ASTM):

ASTM C33 Specification for Concrete Aggregates

B. City of Fairfield Standard Drawings and Specifications

C. AREMA Trench and Backfill Requirements

D. Union Pacific Railroad (UPRR) Trench and Backfill Requirements

E. Borrow backfilling with or without AC paving

1.05 REGULATORY REQUIREMENTS

A. Regulatory requirements, which govern the work of this Section, include the following governing codes:

1. California Code of Regulations (CR), Title 8, Chapter 4, Subchapter 4 - Construction Safety Orders, and Subchapter 19 – Trench construction Safety Orders, for trench excavations of 5 feet or more in depth.

2. California Code of Regulations, title 24, Part2, California Building Code, Chapter 33, and Appendix Chapter 33, Excavation and Grading, for protection of the public.

1.06 SUBMITTALS

A. General: Refer to SC-6, Contract Data Requirements, and GC-43, Submittal of Shop Drawings, Product Data and Samples, for submittal requirements and procedures. Submittals for trenches of 5 feet or more in depth shall be submitted to the Engineer for review and approval.

B. Shop Drawings: Conform to the submittal requirements of Section 31 50 00, Excavation Support and Protection. All such submittals shall be prepared, sealed, and signed by a professional civil or structural engineer currently registered in the State of California.

PART 2 - PRODUCTS

2.01 BEDDING AND BACKFILLING MATERIALS

A. Bedding: Unless specified otherwise by public utility owners in their respective Standard Documents, the bedding material shall be:

1. Sand: Sand for bedding of pipe in utility trenches shall be a clean and graded, washed sand, all passing No. 4 U.S. Standard sieve, and conforming generally to ASTM C33 for fine aggregate. Finer sand may be used, if convenient, provided the sand is clean and does not contain deleterious substances in excess of the amounts specified in ASTM C33, Table 3.

   a. Only sand will be permitted for bedding of concrete pipe, clay pipe, and cast-iron pipe.

2. Pea Gravel: Clean and graded, washed river-run gravel, ASTM C33, Size No. 7. Pea gravel may be used in trenches requiring additional drainage and for backfilling above the pipe's upper half (above the horizontal centerline).

B. Backfill Material: Backfill for excavations and trenched under structures shall be Structural Fill as indicated. Conform to Section 31 00 00, Earthwork. Common fill will be permitted only for backfilling of excavations and trenches in open areas and landscaped areas, conforming to the requirements of public utility owners for their respective utilities. Backfill under UPRR railway tracks for track restoration shall conform to the requirements of UPRR.

C. Borrow backfill: Imported borrow backfill with or without AC paving shall conform to Section 19-7.02 of Caltrans Standard Specifications. The imported borrow shall be of a quality suitable for the purpose intended, free of organic matter or other unsatisfactory material. The contractor shall

notify the Engineer of the material sites so that the stripping materials may be taken and the material may be tested.

D. Slurry Cement Backfill: Slurry cement backfill shall consist of a fluid, workable mixture.

PART 3 - EXCAVATION

3.01 STAKING AND GRADES

A. Staking and grades for trench location shall conform to the requirements of GC-44 Survey Requirements, and Section 31 00 00, Earthwork.

3.02 EXISTING UTILITIES

A. Contractor shall conform to the requirements of Section 33 05 25, Support and Protection of Utilities when excavating area adjacent to or below the existing utilities. Damaged utilities due to Contractor's negligence shall be repaired or replaced at Contractor's cost.

3.03 TRENCHING AND EXCAVATING

A. Comply with CCR, Title 8, Trench Construction Safety Orders, and the California Building Code, Chapter 33 and Appendix Chapter 33, as applicable.

B. The work of this Section shall conform to the requirements of Section 31 00 00, Earthwork, as applicable. Contractor shall also conform to the applicable jurisdictional agencies and UPRR requirements for trenching and backfilling. If conflicting requirements occur, the most stringent requirements apply.

C. Perform trenching and excavating as indicated and required for utility piping, casings and related structures, and provide shoring, bracing, pumping, and planking as required and as specified in Section 31 50 00, Excavation Support and Protection.

D. Excavate to the lines and grades indicated. Field verify location and depth of existing utilities prior to work requiring casing installation work. Over excavation will not be allowed or paid for, and shall be restored as directed by the Engineer at Contractor's cost.

E. Excavate trenches for pipes and pipe casing by the open-cut method, except where jacking and boring operation is indicated. Hand-excavate for crossing or longitudinal pipelines or utility structures located within 3 feet to any existing structures.

F. In paved areas, cut pavement along the neat lines at the width indicated for the trench. Pavement shall be sawcut at full depth. After compacting the backfill, restore pavement to a condition equivalent to that existing at the start of construction.

G. Excavate trenches to the indicated width as all points below a horizontal plane 2 feet above the top of the pipe. Excavation above this plane may exceed the indicated width as required. Where the width is not indicated, make the width not less than 6 inches nor more than 18 inches from the outside wall of the new pipes, or pipe casings if the casings are to be installed.

H. The bottom of excavations shall be firm, undisturbed earth or cut subgrade, clean and free from loose material, debris, and foreign matter. When bottoms of excavations or trenched are a soft or unstable material, the bed shall be made firm and solid by removing said unstable material to a

sufficient depth and replacing same with sand or pea gravel, compacted to at least 90 percent relative compaction.

I. Where water is encountered in the trench, dewater as specified in California Department of Transportation (Caltrans), Standard Specifications (2010) , and provide sand or pea gravel as required to drain the water and stabilize the bed.

J. Bell holes shall be accurately placed and shall not be larger that required to make the joint.

3.04 BEDDING AND BACKFILLING

A. Provide firm and uniform support of piping at indicated elevations and grades. Carefully tamp bedding material as required for firm support.

B. Backfill below the horizontal centerline of pipe shall be sand, unless specified otherwise in the Contract Plans. Backfill to 6 inches above the top of pipe from the centerline of pipe shall be the herein specified, as applicable, or as required by the public utility owners.

C. Backfill shall be placed in 6-inch layers, leveled, rammed, and tamped in place. Each layer shall be compacted with suitable compaction equipment, taking care not to damage or misalign any pipe. Compact backfill to at least 90 percent relative compaction in open areas and 95 percent compaction under structures or track ballasts.

D. Backfilling around concrete structures and for duckbanks and similar utilities shall conform to the applicable requirements of section 31 00 00, Earthwork.

E. The imported backfill shall be placed and compacted to designated dimensions as specified in Sections 19-1.03 of the Caltrans Standard Specifications.

F. The Asphalt paving on imported backfill shall conform to 32 12 16, Asphalt Concrete.

3.05 FIELD QUALITY CONTROL

A. Comply with applicable requirements specified in Section 31 00 00 Earthwork.

END OF SECTION

This Page Not Used

SECTION 330535

PROTECTION, REMOVAL AND ABANDONMENT OF UTILITY PIPES

PART 1 - GENERAL

1.01 DESCRIPTION:

A. Work in this section consists of installation of new casing pipes, and removal and abandonment of existing utility pipes and facilities. All work will be performed at the locations and limits as shown on the plans and as directed by the Engineer.

B. This section includes the requirements for the following work;

1. Provide protection to existing public and private utilities that cross the proposed reinforced concrete box installation by installing a split steel casing and concrete encasement of utility pipes.

1.02 RELATED SECTIONS:

A. SC-6, Contract Data Requirements

B. SC-9, Delivery, Loading and Storage

C. SC-10, Work Sequence Constraints

D. SC-14, Hazardous Materials

E. GC-34, Contractor's Work Area

F. GC-43, Shop Drawings Product Data and Samples

G. GC-44, Survey Requirements

H. GC-51, Disposal of Materials

I. GC-52, Protection of Completed Portions of Work

J. GC-53, Cleanup

K. GC-67, Differing Site Conditions

L. GC-74, Warranty Work and Warranty

M. Section 02 41 00, Demolition

N. Section 31 00 00, Earthwork

O. Section 33 05 25, Support and Protection of Utilities

P. Section 33 05 28, Trenching and Backfilling for Utilities

1.03 REFERENCES:

A. American Society for Testing Materials (ASTM):

1. ASTM A 139 Grade B, Specification for Split Steel Casings

B. City of Fremont –Standard Plans, and Standard Specifications

C. Union Sanitary District –Standard Specifications 2006

D. BART Facilities Standard – Criteria Civil – Utilities, Sections 1 through 5.

E. AREMA - Section 5.3, Specification for Pipeline Conveying Non-flammable Substances.

1.04 REGULATORY REQUIREMENTS

A. Regulatory requirements, which govern the Work of this Section, include the following governing codes:

1. California Code of Regulations (CR), Title 8, Chapter 4, Subchapter 4 - Construction Safety Orders, and Subchapter 19 – Trench construction Safety Orders, for trench excavations of 5 feet or more in depth.

2. California Code of Regulations, title 24, Part 2, California Building Code, Chapter 33, and Appendix Chapter 33, Excavation and Grading, for protection of the public.

3. Alameda County Flood Control – Water Conservation District

4. Regional Water Quality Control Board

5. Alameda County Water District

1.05 SUBMITTALS:

A. General: Conform to SC-6, Contract Data Requirements and GC-43, Shop Drawings, Product Data, and Samples for submittal requirements and procedures.

B. Product data: Submit manufacturer's product data for pipe casings (including hardware, angles, joints, clamps), casing seals, bedding, backfill and grouting materials.

C. Shop drawings: Shop drawings shall conform to the submittal requirements of AREMA, the requirements of the public utility owners, and this Section.

1. Provide shop drawings and written procedures describing in detail, the proposed method of installation and placement of the pipe casings, Contractor's plan to prevent "freezing," and methods of preventing pipe floatation and terminating grouting at the end of the casing.

2. Provide shop drawings and written procedures describing in detail, the proposed method of removal and abandonment of existing longitudinal and transverse utility pipes, including utility supports and trench excavation, protection to existing structures, shoring and sheeting, capping and sealing existing facilities to remain in place, trench restoration, and any other work related to removal and abandonment work.

3. Shoring and bracing plans, calculations and details prepared by a Civil or Structural Engineer licensed in the State of California.

4. Utility support details including support block, bracing to prevent pipe shifting or floatation, across or parallel to trench.

5. Excavation supports at open trench areas, and shall conform to Section 33 05 25, Support and Protection of Utilities.

6. Detailed locations, sizes, and depths of all open trench, pipe installation and backfill methods and procedures.

D. Permits: Submit approved open trench permits from respective public utility owners.

E. Qualification Personnel: Submit, 5 calendar days after notice of award, the name of the Split Casings and Open Trench subcontractor and the Project Superintendent with their qualifications and resume meeting the minimum requirements specified in these Technical Specifications for review and approval. No open trench work will proceed until the Owner approves the subcontractor and the Project Superintendent.

F. Survey Data: Submit survey data obtained by a Surveyor licensed in the State of California.

G. Schedules: Pipe installation schedule that include schedules of excavation and backfill operations.

H. Specifications: Provide specifications of equipment to be used for each type of operation.

I. Samples: Cut sheets of products to be used.

J. Quality assurance/control submittals

1. Methods of Installation

   a. Trenching and Backfilling Operation

2. Test reports: Welding

3. Certificates: Provide certificate of compliance for pipe casings, hardware or accessories, casing seals, bedding and backfill materials.

4. Manufacturer's instructions: Provide manufacturer's installation procedures for each specified product to be used.

5. Safety and Worker's Protection: Conform to SC-13, Safety Precautions, Programs and First Aid Requirements.

K. Closeout Submittals: Conform to GC-63 Project Records.

L. MCI/Verizon temporary relocation plan: Contractor shall submit a plan and design for spanning the Warren Ave. excavation during construction.

1.06 QUALITY ASSURANCE:

A. Quality assurance shall conform to California Department of Transportation (Caltrans), Standard Specifications (2010), Section 11, Quality Control and Assurance, for quality assurance program.

1.07 DELIVERY, STORAGE AND HANDLING:

A. Delivery, storage and handling shall conform to SC-9, Delivery, Unloading and Storage requirements and GC-51, Disposal of Materials, for disposal of materials. Disposal of hazardous soils and materials shall conform to GC-9, Hazardous Materials or Unusual Conditions.

1.08 PROJECT SITE CONDITIONS:

A. Jobsite requirements: Refer to Geotechnical Report for soil boring information. Excavations in which products will be buried shall be dry.

B. Existing conditions: Refer to GC-44, Survey Requirements and GC-67, Differing Site Conditions and Section 02 41 00, Demolition and Section 31 00 00, Earthwork.

C. Pothole Information: Refer to Existing Utility drawings for pothole information of the existing utilities.

D. Additional Pothole Information: After review of Contract Documents and if it is determined that additional pothole is required to verify depth and location of existing utilities, Contractor shall notify Engineer in advance and request for additional potholes be performed. Upon written approval of Engineer, Contractor shall perform the potholing work prior to excavation.

E. Coordinate with and obtain permit from jurisdictional utility owner for use of water supply during construction. Payment associates with acquiring water for construction use shall be at Contractor's cost.

F. Dewatering shall conform to the following:

1. The Contractor shall obtain written approval of all de-watering operations (De-Watering Operations Plan) from Engineer prior to the start of these operations. The Contractor shall provide to Engineer a written dewatering plan which includes an estimate of the duration and quantity of the water to be removed during the de-watering operation. Sediment traps, sediment basins, or banker tanks shall be utilized to remove settleable solids from the water prior to disposal. Further filtration of the water following the use of sediment traps, sediment basins, or banker tanks may be required as directed by Engineer at the Contractor's expense. The plan shall also include details on the methods, equipment, and schedule (frequency) for testing of any water to be discharged to confirm that it meets requirements of these Contract Documents, State and Federal regulations, and the requirements of the Regional Water Quality Control Board.

2. The Contractor shall contact the Regional Water Quality Control Board at (510) 622-2438 for approval and to receive a permit for any groundwater pretreatment process where discharges to a storm drain, creek, or watercourse are proposed.

3. The Contractor shall contact the Union Sanitary District Environmental Compliance at (510) 477-7500 for approval and to receive a permit for any discharges into the sanitary sewer.

4. Water from de-watering operations may be disposed of into the City's storm drain system or sanitary sewer system with written approvals and/or permits from the utility owner or governing agency. Prior to disposal of any water from de-watering operations, the Contractor shall have the water analyzed by a qualified lab for the following constituent concentrations, and provide the lab results to Engineer. .

5. The Contractor shall note that periodic discharges from rainfall, blow-offs, surface, subsurface, pipe leakage, and groundwater can be expected at any time of the year, and will need to be pumped out as needed.

6. The Contractor shall furnish and install all or any sheet piling required and any other devices necessary to remove encountered water. Groundwater shall be removed by suitable means approved by Engineer, will prevent the groundwater from softening the trench bottom prior to backfilling with backfill material.

G. Trench and Backfill: Refer to the requirements of jurisdictional agencies.

1.09 SCHEDULING:

A. General

B. Coordination

1. The Contractor shall coordinate activities to assure efficient and orderly procurement, fabrication, construction, installation and testing/start-up of all parts of the work. This includes coordinating operations covered under different sections of the Contract Documents that are dependent on each other for proper installation and operation.

2. Where installation of one component depends on installation of other components before or after its own installation, activities shall be scheduled in the most appropriate sequence to obtain the most satisfactory installation.

3. The Contractor shall coordinate scheduling and timing of administrative procedures with other activities to avoid conflicts and to ensure orderly progress. Such activities include, but shall not be limited to:

   a. Preparation of Construction Schedules.

   b. Preparation and processing of submittals.

   c. Attending Progress meetings.

   d. Coordinating Project closeout activities.

C. Scheduling:

The schedule shall conform to the requirements in SC-23, Construction Progress Schedule.

1.10 WARRANTY:

A. General: Warranty shall conform to GC-74, Warranty Work and Warranty on Repaired or Replaced Parts.

1.11 MAINTENANCE AND WORK AREA:

A. Work area and access: Contractor shall conform to GC-34, Contractor's Work Area. The Contractor shall not block any driveway or access to adjacent property owners or service road at any time during construction.

1.12 PROTECTION:

A. Potholing:

1. The Contractor shall review available pothole information and field-verify all existing utilities within the limit of work (type, size, location and depth) prior to starting any excavation. The Contractor shall not proceed with underground installation until field verification related to existing utilities has been completed to the satisfaction of the Owner. The Contractor shall immediately notify the Owner of conflicts in which there is less than one foot of separation between the existing and proposed facility.

2. The Contract Plans may not show all existing utilities within the limit of work area. The Contractor may be required by Engineer to perform additional potholing to verify existing utilities not shown on the Contract Plans. The Contractor shall chronologically number each pothole and paint the number of the pothole onto the pavement adjacent to the pothole. The Contractor shall record the number of the pothole and identify the pothole by station offset, depth, and type of utility encountered. These notes shall be given to Engineer at the end of each day.

3. If existing utilities are not shown on the Contract Plans or not found to be within reasonable proximity as shown on the Contract Plans, the Contractor shall take all precautionary measures to protect existing facilities from damage and notify Engineer of his finding immediately.

4. The Contractor shall bear full responsibility for all damages by contractor's operation and costs of repairs to existing utilities. Should any such utility be damaged during construction, all expenses of the restoration of the utility to its original service shall be borne by the Contractor, and no additional compensation will be made.

5. Unless otherwise indicated on the Contract Plans or specified herein, the Contractor shall protect in place all water, gas and sewer lines; electrical, power and telephone conduits or structures; petroleum lines; utility service lines and other surface or subsurface structures of any nature that may be affected by the Work. If the Contractor fails to protect such facilities, the Owner reserves the right, if requested by the jurisdiction parties, to permit the jurisdiction parties to move or maintain the utility at the Contractor's expense. Should it become necessary in the performance of the Work to disconnect or reroute any underground utility due to a direct conflict with the new work, disconnection or rerouting will be paid for as extra work unless otherwise specified on the Contract Plans or Technical Specifications. If the utility is private-owned, it will be disconnected or rerouted by the private utility company involved.

6. The right is reserved by the Owner, and by owners of public utilities and franchises, to enter upon any road, right-of-way, or easement for the purpose of maintaining their property and making necessary repairs or changes caused by this work.

7. Backfill of potholes shall conform to Section 31 00 00, Earthwork.

B. Trench Excavation and Protection: Conform to Section 31 50 00, Excavation Support and Protection, and the following:

1. The Contractor shall conform to the rules and regulations pertaining to construction safety established by the California Division of Industrial Safety (CAL-OSHA). The Contractor shall, before beginning any excavation or trench work 5 feet or more in depth, secure a permit "to perform Excavation or Trench Work" from the State of California, Division of Industrial Safety.

2. In order to receive a permit "to perform Excavation or Trench Work", the Contractor must submit a detailed plan showing his proposed design for shoring, bracing or other provisions to be made for worker protection from the hazard of caving ground during the excavation of any trench or trenches 5 feet or more in depth. If such plan varies from the shoring system standards established by the Construction Safety Orders, the plan shall be prepared by a registered Civil or Structural Engineer in the State of California.

3. The Contractor shall file a copy of the permit "to perform Excavation or Trench Work" with Engineer at least five (5) days before the beginning of any excavation or trench work.

4. The acceptance of the copy of the permit "to perform Excavation or Trench Work" shall in no way be construed to impose tort liability on the Owner, or any of its officers, employees or designated agents by reason of any damage to person, including death or property resulting from or arising out of the use of such plan, and the Contractor shall be fully responsible for any such damage, and the Contractor shall indemnify and hold harmless the Owner, its officers, employees or designated agents from any loss or liability resulting from the use of such plan.

5. The permit, together with a copy of the approved plan for trench safety, shall be maintained on the Jobsite at all times.

6. All bracings shall be adequate to protect and prevent movement, either horizontally or vertically, of existing utility lines not limited to water lines, storm lines, gas/petroleum lines, electrical and telephone conduits and any and all other underground or surface facilities within or adjacent to the excavation.

7. Access to trenches shall be provided. Safe and suitable ladders shall be provided for all excavations four (4) feet and over in depth. The ladders shall project a minimum of two (2) feet above the top of the trench and one such ladder shall be provided for every 25 feet of open trench, as set forth in the rules, orders and regulations prescribed by the State of California Construction Safety Orders.

C. Safety: All work shall conform to the requirements of the State of California, Division of Industrial Safety, OSHA and CAL-OSHA. The Contractor's attention is directed to "Title 8 – Tunnel Safety Orders of the State of California".

1. Prior to construction, the Contractor shall conduct a pre-job Safety Conference with representatives from the Owner, subcontractor, Union Pacific Railroad and CAL-OSHA. This will be the responsibility of the Contractor to coordinate and organize. Meeting minutes shall be prepared by the Contractor and distributed to all parties. Costs incurred due to coordinating work, organizing a meeting with these representatives shall be borne by the Contractor at no additional charges to the Owner.

2. Underground construction shall be performed in such a manner so as to minimize ground movement in front of and surrounding the excavation and to prevent subsidence of ground surface, structure, and utilities above and in the vicinity of the crossing.

PART 2 - PRODUCTS

2.01 PRODUCTS AND MANUFACTURERS:

A. Pipe casings: Pipe casings shall be manufactured from steel conforming to ASTM Grade 2 with minimum yield strength of 35,000 psi before cold forming. Pipe casings for all existing utility lines that cross the tracks shall be smooth steel split casings, two-section hinged or securely bolted, either coated or cathodically protected, and shall meet the AREMA and ASTM thickness requirements for steel casing. Pipe size, length and minimum pipe wall thickness shall be as shown on the plans. All circular joints shall be welded. Manufacturer: Ironhedllc at 1-866-476-4510 (www.ironhedllc.com), Victor Pipe and Steel, Inc. at 1-800-264-6315 (www.victorpipe.com), IPSCO at 1-630-810-4737 (www.ipsco.com), or approved equal products.

B. Casing Seals: Casing seals shall be made of 1/8" synthetic rubber, secured with stainless steel band with non-magnetic worm gear mechanism. Manufacturers: Advanced Products and Systems, Inc at 1-337-233-6116 (www.apsonlune.com), The BWM Company (www.bwmcompany.com), or approved equal products.

C. Cathodic Protection and Test Station: Required for all steel split casings if pipes not coated.

D. Trench bedding and backfill materials: Conform to ASTM C-33. As specified by the jurisdictional agencies in their respective Standard Drawings and/or Specifications, and as modified in the plans for trench restoration.

E. Outside and Filled material: After the casing is installed and securely blocked to prevent flotation, fill the intervening annular space with cement slurry, using pumping equipment in one continuous operation.

2.02 EXISTING FACILITIES:

A. Removal and Restoration of Existing Tracks:

1. Protect existing facilities such as existing structures, foundations and footings, fencing, tracks, and utility pipes from damage during clearing and grubbing and excavation. Take all precautionary measures to make sure existing facilities are not disturbed or damaged by contractor's operation. Any damage due to contractor's negligence shall be repaired or replaced at contractor's cost.

2.03 FABRICATION

A. All products shall be factory fabricated. Field fabrication shall not be acceptable, unless otherwise approved in writing by Engineer or utility owner.

B. Contractor shall verify sizes of existing pipes to receive casings before ordering and fabricating pipe casings.

PART 3 - EXECUTION

3.01 MAINTAINING EXISTING SERVICES:

A. Existing pipe crossings: Existing utilities shall remain in service 24 hours a day during casing installation. No interruption to the services will be permitted.

3.02 PREPARATION:

A. Clear and grub work area conforming to Section 31 11 00, Clearing and Grubbing.

B. Maintain a neat appearance at the work site. Debris developed during construction shall be disposed of concurrently with its generation. Stockpiling of debris during construction shall not be allowed, and shall be removed from the project Jobsite by the end of each working day.

C. Maintenance and Protection of Excavations: Temporary support, adequate protection and maintenance of all underground and surface utilities, structures, drains, sewers and other obstructions encountered in the progress of the Work shall be furnished and paid for at Contractor's expense. Contractor shall take all reasonable precautions to prevent movement of the sides of excavation area. Contractor shall protect all excavations from surface water.

3.03 REMOVAL OR ABANDONMENT OF EXISTING FACILITIES:

A. General: Removal or abandonment of existing utilities as shown on the Contract Plans shall conform to Division 02, Existing Conditions and Division 31, Earthwork of these Technical Specifications.

B. Existing Private Utilities:

1. Conform to the requirements of Engineer, and Alameda County Water District for procedures and requirements in removing abandoned facilities.

2. Testing and remediation of contaminated soil, if necessary, shall conform to the requirements and local, state and federal regulations.

3. Conform to California Department of Transportation (Caltrans), Standard Specifications (2010) for removal, disposal and stockpiling of contaminated soil.

3.04 INSTALLATION OF PIPE CASINGS:

A. Split Steel Casing: The Contractor shall install split steel casings for various existing public utility crossings under the proposed storm drain culvert. Installation of steel casing shall be done by open trench method, conforming to the requirements of the Standard Specifications, these Contract Specifications, Union Sanitary District Standard Specifications and details shown on the Contract Plans.

B. Installation:

1. Field verify location and depth of the existing utility line to receive casing.

2. Excavate pipe trench in accordance with Section 33 05 28, Trenching and Backfilling for Utilities. Trenches shall be excavated either by hand or by machine, beginning at the outlet and proceeding upgrade. All trenches shall be excavated vertically and shall be of open construction. Hand dig trench as it gets closer to existing pipe.

3. Provide support to existing utility line in accordance with Section 33 05 25, Support and Protection of Utilities. Contractor shall brace and support all existing utilities crossing the trench, as required. All existing pipes, conduits or ducts which are crossing or partially trenched, shall be rigidly supported across the trench by treated redwood timbers as directed by Engineer unless otherwise shown on the Contract Plans or indicated elsewhere in these Technical Specifications. During backfilling operations, redwood timbers used for support shall be removed and disposed of.

4. Contractor may encounter pea gravel, sand or quarry waste in all existing trenches. Contractor shall protect the trench from cave-in during trenching. Any damage to the existing facilities caused by trench failure or cave-in shall be restored by the Contractor at no additional cost to the City. These restoration methods shall be as specified by Engineer. This may include removal of collapsed materials, rebuilding the trench and full pavement section, or slurry cement backfill as specified in Section 31 00 00, Earthwork.

5. All trenches shall be of sufficient width to provide free working space on each side of the pipe and in no case shall such space be less than six (6) inches or shall it be wider than 1 ½ the diameter plus 12 inches unless otherwise shown on the plans. Where bracing and shoring is necessary, an additional width as directed by Engineer will be allowed. In all cases, there shall be sufficient space between the pipe and the sides of the trench to thoroughly backfill and compact around the pipe. Contractor may propose in writing, for Engineer's approval, additional trench width beyond that shown on the Contract Plans.

6. Unless otherwise approved by the Engineer or utility owner, no more trench shall be opened than can be properly and completely backfilled in one day. If approved, the open trench shall be covered with steel plates and properly fenced to protect public from injury.

7. In firm ground the trench shall be cut no deeper than as shown on the plans, and shall be cut to its true line and grade. If the trench should be cut deeper than necessary, it shall be brought up to grade by crushed rock or material approved by Engineer and compacted.

8. Place split steel casing as per manufacturer's recommendation. Alternating sections shall be installed so that the existing pipe remains fully supported on the existing bedding. Only as much length of pipe shall be exposed as necessary to install the bottom segment of the casing section. The bottom section of existing pipe and casing shall be fully supported. Extreme care shall be taken to prevent damage to the existing pipe receiving casing.

9. No pipe shall be laid until contractor's independent testing agency inspects and approves the condition of the bottom of the trench.

10. Where applicable, welding of the transverse joint between new and existing casing, conforming to the requirements of California Department of Transportation (Caltrans), Standard Specifications (2010).

11. Following assembly, surfaces of bolts, nuts, washers, and welded surfaces shall be primed and coated. Install casing seals or tie to existing casing where applicable, conforming to AREMA and BFS requirements.

12. Before backfilling, the entire surface of the assembled casing shall be fully inspected and any damage to the coating repaired. The initial lift up to 6 inches over and around the side of casing shall be carefully placed.

13. Place bedding material, meeting the requirements of Section 33 05 28, Trenching and Backing for Utilities, at trench bottom, level in one continuous layer not exceeding six inches in compacted depth.

14. Annular space: Spacing between pipe casing and existing pipe shall be filled with lean grout. Lean grout shall consist of one-half part Portland Cement, one part sand, and sufficient water to produce a workable mixture; or one to one neat cement mix (no sand). Grouting pressure is to be controlled so as to avoid deformation of the pipe and/or avoid movement of the surrounding ground but in any case should not exceed 80% of the

overburden pressure or be less than 1 psi. Sand for the grout mixture to be placed outside the pipe shall be of such fineness that 100% will pass a No. 8 sieve and not less than 35% will pass a No. 50 sieve.

15. The control of water shall be the responsibility of the Contractor. The construction site, particularly the bottom of the trench, shall be de-watered and kept free of standing water or excessively muddy conditions as needed for proper execution of the construction work.

16. Drainage of trench water through the pipeline under construction shall be prohibited.

3.05 CONSTRUCTION REQUIREMENTS:

A. Tolerances: Pipe casings shall be installed true to line and grade. The tolerance for pipe slopes is 0.005+/-.

B. Limit of Work Schedule: Conform to the requirements of jurisdictional and regulatory agencies for limit of work schedule.

C. Interface with other work: Contractor shall coordinate work and schedule with other contractors working in the same project limit of work and shall conform to SC-10, Work Sequence & Constraints.

D. All required water, all work and materials required for obtaining, pumping, transporting and applying and otherwise disposing of said water shall be in an approved manner and shall be performed by, and at the expense of the Contractor and no extra or separate compensation will be made thereof.

3.06 REPAIR/RESTORATION:

A. Contractor shall restore work area to its original condition prior to performing work. This includes repairing or replacing portion of fences, walls, embankment, pavement, and any other facilities.

3.07 CLEANING:

A. General: Cleaning shall conform to GC-51, Disposal of Materials, GC-52, Protection of Completed Portions of Work and GC-53, Cleanup.

B. Contractor shall provide a final clean-up of entire project site prior to scheduling the final walk-through for acceptance of the work.

C. Disposal of surplus material: Contractor shall dispose of all surplus excavated materials not needed for fills or other designated purposes. All material deemed unsuitable by Engineer shall be disposed of properly and replaced with approved materials.

D. Disposal of hazardous material: Conform to SC-14 and GC-9, Hazardous Material or Unusual Conditions. This includes but not limited to the excavated contaminated soil during the trench excavation work.

3.08 INSPECTION

A. All materials furnished and work done under this contract will be subject to inspection. The Contractor shall notify Engineer forty-eight (48) hours in advance of any work to be done, in order that inspection may be provided. The Contractor shall inform Engineer at least 72 hours in advance of the work as to the source of all materials proposed to be used in the work.

Samples of materials shall be made available for testing as required by Engineer, prior to starting work and during the course of the work. Work done in the absence of an inspector, without said written permission, shall be subject to rejection.

B. Engineer shall have access at all times to all parts of the shop or plant where material under his or her inspection is being manufactured. When required, the Contractor shall notify Engineer in sufficient time in advance of the manufacture or production of materials to be supplied under this contract, in order that the Owner may arrange for mill or factory inspection and testing of same. Any materials shipped by the Contractor from the factory prior to having satisfactorily passed such testing and inspection by the Owner's representative, or prior to the receipt of notice from said representative that said materials have satisfactorily passed such testing and inspection, or that such testing and inspection will not be required, shall not be used in the Work.

C. The Contractor shall have no cause for claim against the Owner for delays involved in the testing of materials or the evaluation of such tests and no compensation will be made therefore.

D. If, in the opinion of Engineer, work is not being done in accordance with the Contract Documents, written notice shall be given to the Contractor or its authorized agent. Written notice to any supervisors or agent in charge of any portion of the Work in the absence of the Contractor, shall be considered as notice to the Contractor.

E. Work that is defective in its construction, or deficient in any of the requirements of these specifications, shall not be considered as accepted in the event of the failure of any employee of the Owner or inspector connected with the Work, to point out said defects or deficiency during construction. The Contractor shall correct any imperfect work whenever discovered. If he or she refuses or neglects to replace defective work, it may be replaced by the Owner, after notice to the Contractor and his or her sureties, at the expense of the Contractor and the Contractor and his or her sureties shall be liable therefor.

F. Contractor's Request for Final Inspection: The Contractor shall request Engineer, in writing, to conduct a final inspection when the Contractor considers the Work is complete.

G. A Final Inspection will be scheduled within ten (10) working days and conducted by Engineer, if the Owner deems the Work complete. If the Owner does not accept that the contract work as complete, Owner will decline to schedule a Final Inspection, and advise the Contractor the reason for not accepting the work as being complete. When the Contractor again deems the work to be complete, a new written request shall be submitted.

H. The Final Inspection will be conducted by Engineer. As a result of the inspection, the Owner will advise the Contractor of any work that must be completed or corrected before Acceptance, in the form of a Punchlist.

I. Prerequisites for Acceptance:

1. Completion of Punchlist.

2. Submittal of final payment requests, with lien releases.

3. Submittal of Record Drawings.

END OF SECTION 33 05 35

STATE OF CALIFORNIA - DEPARTMENT OF TRANSPORTATION

CONTRACT CHANGE ORDER MEMORANDUM

TO: Tony Anziano, Program Manager /	FILE: E.A. 04 - 0120F4
FROM: Darryl Schram, Senior TE	CO-RTE-PM SF-80-13.2/13.9
	FED. NO. No
CCO#: 298 SUPPLEMENT#: 1 Category Code: CXXX	CONTINGENCY BALANCE (incl. this change) $82,670,223.04
COST: $0.00 INCREASE ☐ DECREASE ☐	HEADQUARTERS APPROVAL REQUIRED? ☐ YES ☑ NO
SUPPLEMENTAL FUNDS PROVIDED: $0.00	IS THIS REQUEST IN ACCORDANCE WITH ENVIRONMENTAL DOCUMENTS? ☑ YES ☐ NO
CCO DESCRIPTION: IERBYS Planning Revised	**PROJECT DESCRIPTION:** CONSTRUCT SELF-ANCHORED SUSPENSION BRIDGE

Original Contract Time:	Time Adj. This Change:	Previously Approved CCO Time Adjustments:	Percentage Time Adjusted: (including this change)	Total # of Unreconciled Deferred Time CCO(s): (including this change)
2490 Day(s)	0 Day(s)	501 Day(s)	20 %	3

THIS CHANGE ORDER PROVIDES FOR:

Revising building work attachments and providing site work attachments for rehabilitation construction at Interurban Electric Railway Bridge Yard Shop (IERBYS).

The Department is in the process of constructing a new maintenance facility for the San Francisco-Oakland Bay Bridge East Spans. This new facility, which will be constructed over several phases, was planned to include a storage warehouse and maintenance training facility. Construction of the warehouse will begin this year, but timing of the completion of the facility will not coincide with the completion of the major East Span construction projects including the SAS Project. Additionally, planning for the new warehouse did not anticipate the level of storage of materials, parts and engineering documentation that will actually be required for the new East Span. To address the immediate concern of the large amount of materials being primarily furnished by the SAS Project and needing proper storage the IERBYS building, an existing state-owned maintenance facility constructed in 1938, has been identified as a solution.

The IERBY's building will be used to store the unique equipment, materials, and engineering documents furnished from the East Span Project needed for use in maintaining the Structure. This equipment, materials, and engineering documents include but are not limited to such items as: additional cable bands, cable clamps, cable band bolts, cable band bolt tensioning equipment, cable S-wire wrapping equipment, replacement suspender ropes, tower replacement struts, deck joint replacement materials, design and construction documents, etc. Most of these items are specific to the SAS Structure and will be needed for proper maintenance over time and/or restoration of bridge service after a major earthquake event. Additionally, as the SAS Structure is placed into service and transferred into the maintenance inventory, this facility will also provide a venue to transfer construction knowledge and train maintenance personnel in how to maintain the new Structure.

The Toll Bridge Program Oversight Committee (TBPOC) Project Management Team (PMT) brought this issue to the February 6, 2013 TBPOC meeting for discussion and approval. The TBPOC approved the use of the IERBY's building. The TBPOC provided approval for SAS Contract Change Orders to perform the early work to relocate a portion of the maintenance personnel currently occupying the IERBY's building, to perform an initial geotechnical foundation investigation to determine the condition of the existing wood piling foundation, and to perform soft demolition to remove all the interior non-structural partitions. As part of the approval, this early work will be funded through Bay Area Toll Authority (BATA) Rehabilitation funds. A supplemental funds request will be prepared to transfer these funds into the SAS Contract

This change order will provide revised versions of building and site work plan sheets and specifications for rehabilitation construction of IERBYS.

This is a no cost change order.

No time adjustment is warranted as this change order does not affect the controlling operation.

This change order has concurrence from William Casey (Supervising TE) and Rich Foley (HQ Oversight).

ADA Notice: For individuals with sensory disabilities, this document is available in alternate formats. For information call: (916) 654-6410 or TDD (916) 654-3880 or write Records and Forms Management, 1120 N Street, MS-89, Sacramento, CA 95814.

CONCURRED BY:			
Construction Engineer:	William Casey, Sup TE	Date	4/8/13
Bridge Engineer:		Date	
Project Engineer:		Date	
Project Manager:		Date	
FHWA Rep.:		Date	
Environmental:		Date	
Other (specify):	HQ, Rich Foley	Date	4/9/13
Other (specify):		Date	
District Prior Approval By:		Date	
HQ (Issue Approve) By:		Date	
Resident Engineer's Signature:		Date	5-20-13

ESTIMATE OF COST

	THIS REQUEST	TOTAL TO DATE
ITEMS	$0.00	$0.00
FORCE ACCOUNT	$0.00	$100,000.00
AGREED PRICE	$0.00	$0.00
ADJUSTMENT	$0.00	$0.00
TOTAL	$0.00	$100,000.00

FEDERAL PARTICIPATION

☐ PARTICIPATING ☐ PARTICIPATING IN PART ☑ NONE
☐ NON-PARTICIPATING (MAINTENANCE) ☐ NON-PARTICIPATING

FEDERAL SEGREGATION (if more than one Funding Source or P.I.P. type)
☐ CCO FUNDED PER CONTRACT ☐ CCO FUNDED AS FOLLOWS

FEDERAL FUNDING SOURCE	PERCENT

ADA Notice: For individuals with sensory disabilities, this document is available in alternate formats. For information call: (916) 654-6410 or TDD (916) 654-3880 or write Records and Forms Management, 1120 N Street, MS-89, Sacramento, CA 95814.