DIST	COUNTY	ROUTE	POST MILES TOTAL PROJECT	SHEET No	TOTAL SHEETS
04	ALA	80	2.0	1204f	1204

REGISTERED ARCHITECT — DATE 03/27/13

PLANS APPROVAL DATE

LICENSED ARCHITECT — GREGORY P. BAKER — C-16884 — 10.31.2013 RENEWAL DATE — STATE OF CALIFORNIA

The state of California or its officers or agents shall not be responsible for the accuracy or completeness of scanned copies of this plan sheet.

HNTB CORPORATION
1111 BROADWAY
9TH FLOOR
OAKLAND, CA 94607

HNTB Corporation
Engineers Architects Planners

IERBYS TEMPORARY IMPROVEMENTS

Interurban Electric Railway Bridge Yard Shop

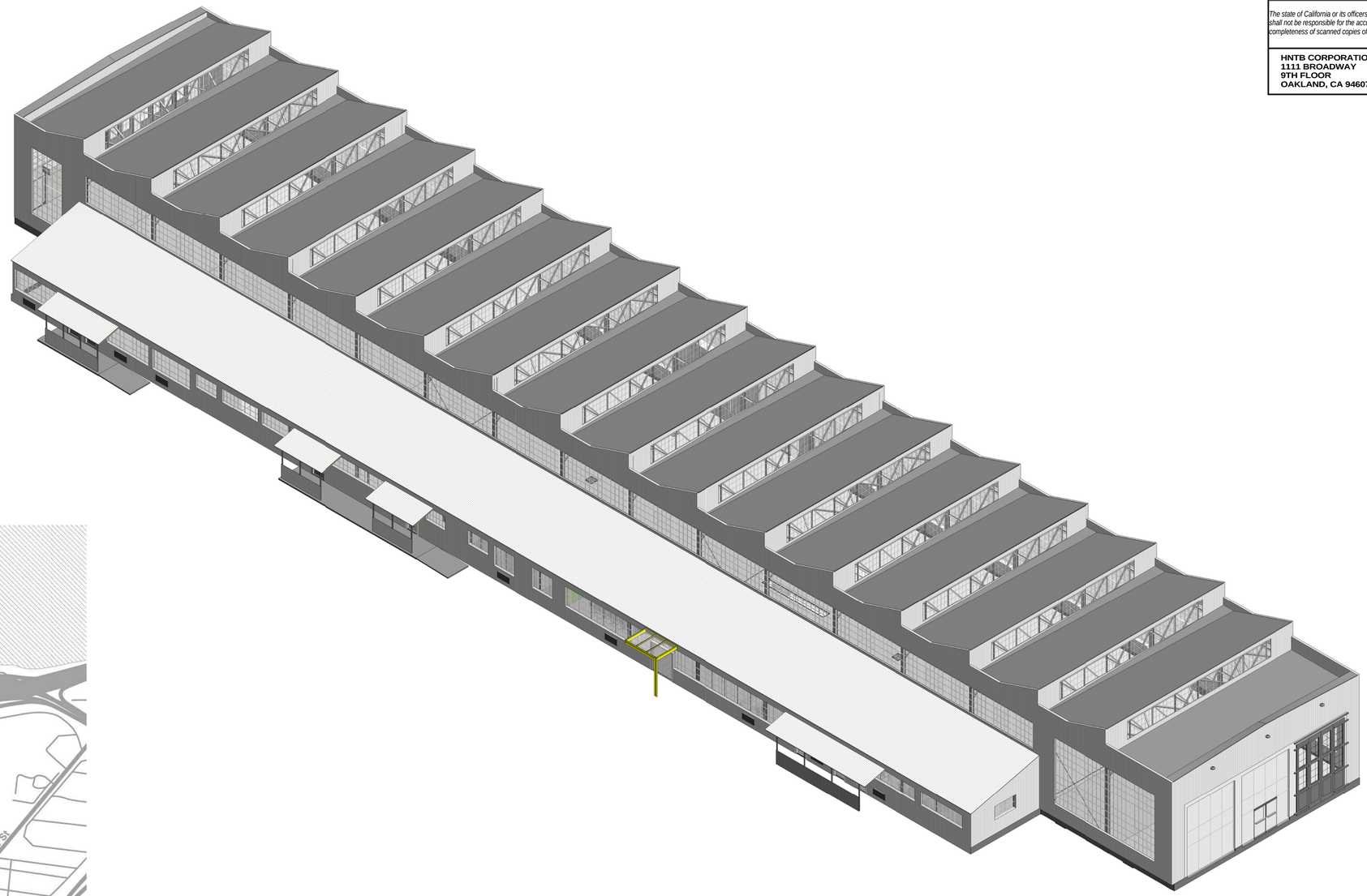

VICINITY PLAN

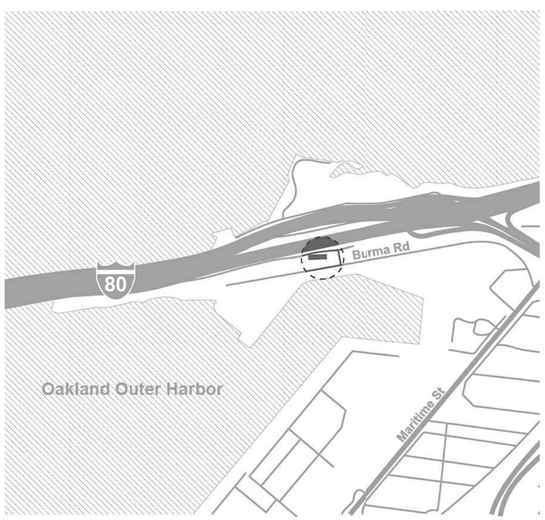

SAN FRANCISCO OAKLAND BAY BRIDGE
EAST SPAN SEISMIC SAFETY PROJECT

IERBYS TEMPORARY IMPROVEMENTS - BUILDING

COVER SHEET

SHEET G000

Quincy Wong
DESIGN OVERSIGHT

03/27/13
SIGN OFF DATE

	BY	CHECKED
DESIGN	COREY SCHURR	GREGORY BAKER
DETAILS	BY	CHECKED
QUANTITIES	BY	CHECKED

PREPARED FOR THE
STATE OF CALIFORNIA
DEPARTMENT OF TRANSPORTATION

KAREN Y. WANG
PROJECT ENGINEER

BRIDGE NO

POST MILES 2.0

DESIGN DETAIL SHEET (ENGLISH) (REV. 03/14/12)

ORIGINAL SCALE IN INCHES FOR REDUCED PLANS 0 1 2 3

UNIT: 04
PROJECT NUMBER AND PHASE: CONTRACT NO.: 0120F4

DISREGARD PRINTS BEARING EARLIER REVISION DATES

REVISION DATES ___ ___ ___ ___

SHEET 01 OF 66

C:\Users\jabraham\Documents\IERBYS\56185_Gateway Park - JAbraham - 3-27-13.rvt

3/27/2013 9:04:57 PM

DIST	COUNTY	ROUTE	POST MILES TOTAL PROJECT	SHEET No	TOTAL SHEETS
04	ALA	80	2.0	1204g	1204

REGISTERED ARCHITECT — DATE 03/27/13

PLANS APPROVAL DATE

LICENSED ARCHITECT — GREGORY P. BAKER — C-16884 — 10.31.2013 RENEWAL DATE — STATE OF CALIFORNIA

The state of California or its officers or agents shall not be responsible for the accuracy or completeness of scanned copies of this plan sheet.

HNTB CORPORATION
1111 BROADWAY
9TH FLOOR
OAKLAND, CA 94607

HNTB Corporation
Engineers Architects Planners

PROJECT INFORMATION

APPLICABLE CODES:	2010 CALIFORNIA BUILDING CODE (CBC) 2010 CALIFORNIA MECHANICAL CODE 2010 CALIFORNIA PLUMBING CODE 2010 CALIFORNIA ELECTRICAL CODE 2010 CALIFORNIA GREEN BUILDING STANDARDS CODE 2010 CALIFORNIA ENERGY CODE 2010 CALIFORNIA FIRE CODE (CFC) 2010 AMERICANS WITH DISABILITIES ACT NFPA 13 (FIRE SPRINKLERS, FIRE PUMPS, FIRE SERVICE MAINS)
OCCUPANCY CLASSIFICATION:	THE BUILDING IS A WAREHOUSE THAT HAS BEEN CONVERTED TO ACCOMODATE MIXED PRIMARY USE GROUPS INCLUDING: - ADMINISTRATIVE (GROUP B) - ASSEMBLY (ACCESSORY TO GROUP B IN ACCORDANCE W/ CBC SECTION 508.2), & - STORAGE (GROUPS S-1 & S-2).
TYPF OF CONSTRUCTION:	TYPE III-B CONSTRUCTION WITH NONCOMBUSTIBLE EXTERIOR WALLS AND COMBUSTIBLE ROOF CONSTRUCTION.
BUILDING HEIGHT:	1 STORY - 27'-0"
BUILDING AREA:	RENOVATED AREA 15,630 SF TOTAL BUILDING AREA 23,640 SF
ALLOWABLE HEIGHT: 55'-0"	FULLY SPRINKLERED

PROJECT DIRECTORY

CLIENT

CALTRANS

Ken Terpstra, Project Manager
ken_terpstra@dot.ca.gov

Project Manager

Karen Wang
Direct: (510) 301- 8926
kwang@hntb.com

ARCHITECT

HNTB Architecture
601 W. 5th St. Suite 1000
Los Angeles, CA 90071
Main: (213)403-1000

Gregory Baker
gpbaker@hntb.com

Fernando Vazquez
fvazquez@hntb.com

CONSULTANTS

STRUCTURAL

Forell/Elsesser
160 Pine St.
San Francisco, CA 94111
Main: (415)837-0700/3015
Fax: (415)837-0800

Rene Vegnos, Principal
rvignos@forell.com

Chris Petteys, Senior Associate
c.petteys@forell.com

LANDSCAPE

HNTB San Jose
1735 Technology Drive, Suite 650
San Jose, CA 95110

Stuart Bussian
Main: (510)587-8741
sbussian@hntb.com

CIVIL

HNTB Oakland
1111 Broadway, 9th Floor
Oakland, CA 94607

John Mountin
jmountin@hntb.com

MEP

Flack + Kurtz
405 Howard St. Suite 500
San Francisco, CA 94105
Main: (415)398-3833

Andrew Harrington, Project Manager
Direct: (415)402-5836
andrew.harrington@wspfk.com

LIGHTING

Horton Lees Brogden
8580 Washington Boulevard
Culver City, CA 90232
Main: (310)837-0929

Tina Aghassian, Project Manager
Main: (310)837-0929 x319
taghassian@hlblighting.com

SHEET INDEX

Sheet Number	Sheet Name	FINAL CD
A500	OVERALL REFLECTED CEILING PLAN	X
A501	ENLARGED REFLECTED CEILING PLAN	X
A600	SCHEDULES	X
A601	WALL TYPES	X
A610	EXTERIOR DETAILS	X
A611	EXTERIOR DETAILS	X
A612	EXTERIOR DETAILS	X
A620	INTERIOR DETAILS	X
A621	INTERIOR DETAILS	X
A622	INTERIOR DETAILS	X
A623	INTERIOR DETAILS	X
A624	INTERIOR DETAILS	X
A650	LANDSCAPE DETAILS	

05 - Structural

S601	STRUCTURAL DETAILS	X
S602	STRUCTURAL DETAILS	X

06 - Mechanical

M000	MECHANICAL LEGEND AND ABBREVIATIONS	X
M001	MECHANICAL SCHEDULES	X
M002	MECHANICAL TITLE 24	X
M003	MECHANICAL TITLE 24	X
M004	MECHANICAL TITLE 24	X
M101	MECHANICAL DEMOLITION FLOOR PLAN	X
M201	MECHANICAL CONSTRUCTION FLOOR PLAN	X
M601	MECHANICAL DETAILS	X

07 - Electrical

E000	ELECTRICAL LEGEND AND ABBREVIATIONS	X
E001	ELECTRICAL LIGHTING FIXTURE SCHEDULE AND TITLE 24 CALCULATIONS	X
E002	ELECTRICAL TITLE 24 CALCULATIONS	X
E100	ELECTRICAL SITE PLAN	X
E101	ELECTRICAL DEMOLITION PLAN	X
E201	ELECTRICAL CONSTRUCTION FLOOR PLAN - POWER	X
E301	ELECTRICAL CONSTRUCTION FLOOR PLAN - LIGHTING	X
E601	ELECTRICAL SCHEDULES AND PARTIAL RISER DIAGRAM	X
E602	ELECTRICAL SCHEDULES	X

08 - Plumbing & Fire Protection

P000	PLUMBING & FIRE PROTECTION LEGEND AND ABBREVIATIONS	X
P001	PLUMBING & FIRE PROTECTION SCHEDULES	X
P101	PLUMBING & FIRE PROTECTION DEMOLITION FLOOR PLAN	X
P201	PLUMBING & FIRE PROTECTION CONSTRUCTION FLOOR PLAN	X
P301	PLUMBING & FIRE PROTECTION ENLARGED PLANS	X
P601	PLUMBING & FIRE PROTECTION DETAILS	X
P602	PLUMBING & FIRE PROTECTION DETAILS	X
P603	PLUMBING & FIRE PROTECTION DETAILS	X

Sheet Number	Sheet Name	FINAL CD
01 - General		
G000	COVER SHEET	X
G001	PROJECT INFO	X
G002	ADA GUIDELINES	X
G003	CODE / LIFE SAFETY	X
G004	FIRE DEPARTMENT ACCESS	X
02 - Demo		
D100-C	CIVIL DEMOLITION PLAN	
D101	DEMO FLOOR PLAN	X
03-Civil		
C100	CIVIL PLAN	
C101	GRADING PLAN	
C102	PAVEMENT STRIPING PLAN	
C103	CIVIL DETAILS	
C200	UTILITY PLAN	
04 - Landscape		
L100	LANDSCAPE INDEX AND LEGEND	
L101	LANDSCAPE AREA IDENTIFICATION PLAN	
L102	LANDSCAPE MATERIAL PLAN	
L103	LANDSCAPE LAYOUT AND PLANTING PLAN	
L104	LANDSCAPE ENLARGEMENT PLAN	
L105	LANDSCAPE DETAILS	
L106	LANDSCAPE DETAILS	
L107	LANDSCAPE DETAILS	
L108	LANDSCAPE DETAILS	
L109	LANDSCAPE DETAILS	
L110	LANDSCAPE DETAILS	
05 - Architectural		
A100	SITE PLAN	X
A101	FLOOR PLAN	X
A200	EXISTING FLOOR PLAN	X
A201	ENLARGED FLOOR PLAN	X
A210	ENLARGED FLOOR PLAN - LOW BAY	X
A211	ENLARGED FLOOR PLAN - LOW BAY	X
A212	FURNITURE PLAN	X
A220	RESTROOM PLANS AND ELEVATIONS	X
A230	PARTIAL ROOF PLAN	X
A250	LANDSCAPE PLAN	
A300	ELEVATIONS	X
A301	ENLARGED ELEVATIONS	X
A302	ENLARGED ELEVATIONS	X
A303	ENLARGED ELEVATIONS - SIGNAGE	X
A310	ENLARGED ELEVATIONS	X
A311	ENTRY CANOPY	X
A320	INTERIOR ELEVATIONS	X
A321	INTERIOR ELEVATIONS	X
A350	LANDSCAPE ELEVATIONS	
A351	LANDSCAPE ELEVATIONS	
A400	OVERALL SECTIONS	X
A401	ENLARGED SECTIONS	X
A402	ENLARGED SECTION LOOKING EAST	X
A403	ENLARGED SECTION AT BAY, TYP	X

3/28/2013 11:47:00 AM

SAN FRANCISCO OAKLAND BAY BRIDGE
EAST SPAN SEISMIC SAFETY PROJECT

Quincy Wong
DESIGN OVERSIGHT
03/27/13
SIGN OFF DATE

	BY	CHECKED
DESIGN	COREY SCHURR	GREGORY BAKER
DETAILS		
QUANTITIES		

PREPARED FOR THE
STATE OF CALIFORNIA
DEPARTMENT OF TRANSPORTATION

KAREN Y. WANG
PROJECT ENGINEER

BRIDGE NO
POST MILES 2.0

IERBYS TEMPORARY IMPROVEMENTS - BUILDING

PROJECT INFO

SHEET G001

DESIGN DETAIL SHEET (ENGLISH) (REV. 03/14/12)

ORIGINAL SCALE IN INCHES FOR REDUCED PLANS 0 1 2 3

UNIT: 04
PROJECT NUMBER AND PHASE:
CONTRACT NO.: 0120F4

DISREGARD PRINTS BEARING EARLIER REVISION DATES

REVISION DATES ___ ___ ___ ___

SHEET 02 OF 66

C:\Users\cschurr\Documents\56185_Gateway Park - Central_cschurr.rvt

DIST	COUNTY	ROUTE	POST MILES TOTAL PROJECT	SHEET No	TOTAL SHEETS
04	ALA	80	2.0	1204h	1204

REGISTERED ARCHITECT — DATE 03/27/13

PLANS APPROVAL DATE

LICENSED ARCHITECT — GREGORY P. BAKER — C-16884 — 10.31.2013 RENEWAL DATE — STATE OF CALIFORNIA

The state of California or its officers or agents shall not be responsible for the accuracy or completeness of scanned copies of this plan sheet.

HNTB CORPORATION
1111 BROADWAY
9TH FLOOR
OAKLAND, CA 94607

HNTB Corporation Engineers Architects Planners

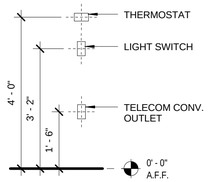

TYP MOUNTING HEIGHTS 8
1/2" = 1'-0"

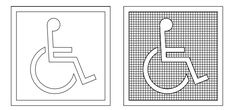

INTERNATIONAL SYMBOL OF ACCESSIBILITY (ISA)

ACCESSIBILITY SYMBOL 7
1/2" = 1'-0"

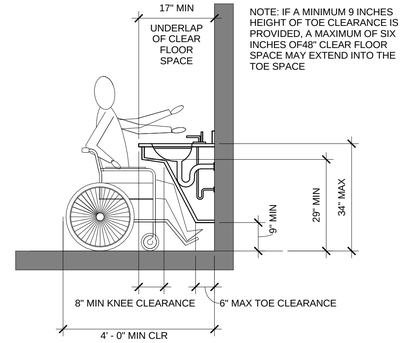

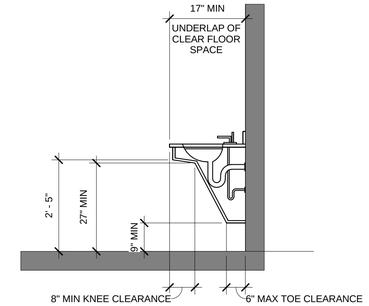

ADA - SINK CLEARANCE 4
1/2" = 1'-0"

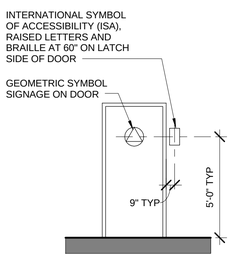

NOTE: PROVIDE (1) SIGN PER TOILET COMPLYING WITH ADA LOCAL CODE. SIGN TO HAVE TACTILE AND GRADE 2 BRAILLE CHARACTERS AND ISA PICTOGRAM. SIGN SIZE 8" X 8". COLOR: GREY WITH WHITE CHARACTERS (TYP)

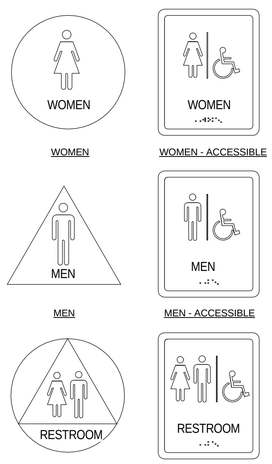

WOMEN — WOMEN - ACCESSIBLE
MEN — MEN - ACCESSIBLE
UNISEX — UNISEX - ACCESSIBLE
GEOMETRIC SYMBOL — INTERNATIONAL ACCESSIBILITY SYMBOL

TOILET ROOM DOOR SIGNAGE 6
1/2" = 1'-0"

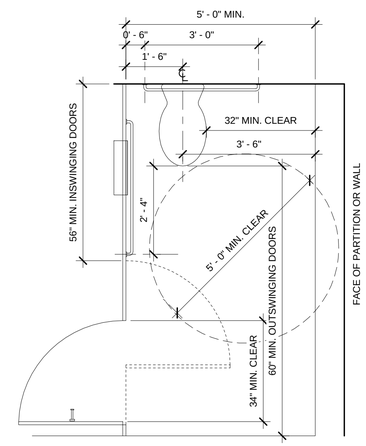

ADA - TOILET PARTITION PLANS 3
1/2" = 1'-0"

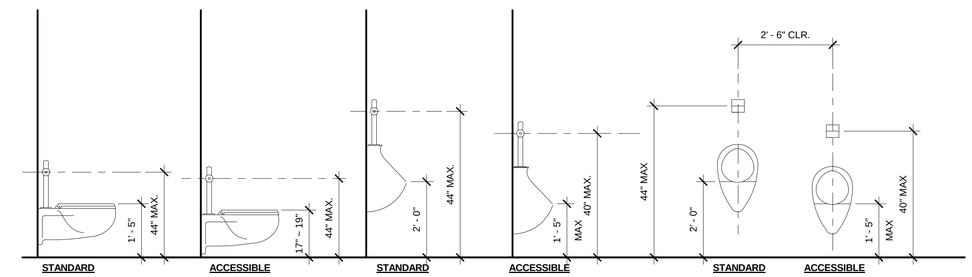

NOTES:
1. THIS DRAWING SHOWS THE MOUNTING HEIGHTS OF THE STANDARD ACCESORIES. SEE PLANS FOR MORE INFORMATION.
2. INSULATE THE HOT WATER AND DRAIN PIPES UNDER EACH ACCESSIBLE LAVATORY.
3. THERE SHALL BE NO SHARP OR ABRASIVE SURFACES UNDER LAVATORIES.
4. FAUCET CONTROLS AT ACCESSIBLE LAVATORY SHALL BE OPERABLE WITH ONE HAND WITHOUT TIGHT GRASPING, PINCHING, OR TWISTING OF THE WRIST TO OPERATE.

ADA - RESTROOM FIXTURES 2
1/2" = 1'-0"

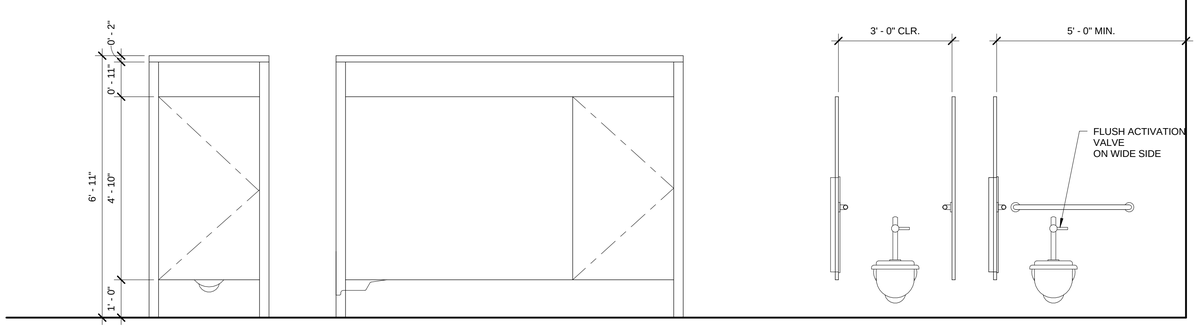

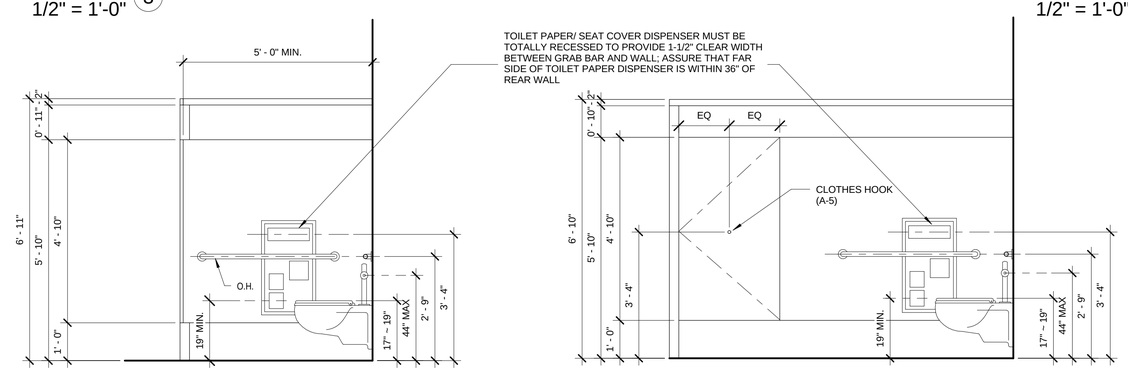

ADA - TOILET PARTITION ELEVATIONS 1
1/2" = 1'-0"

3/27/2013 9:05:09 PM

SAN FRANCISCO OAKLAND BAY BRIDGE
EAST SPAN SEISMIC SAFETY PROJECT

Quincy Wong
DESIGN OVERSIGHT
03/27/13
SIGN OFF DATE

	BY	CHECKED
DESIGN	COREY SCHURR	GREGORY BAKER
DETAILS	BY	CHECKED
QUANTITIES	BY	CHECKED

PREPARED FOR THE
STATE OF CALIFORNIA
DEPARTMENT OF TRANSPORTATION

KAREN Y. WANG
PROJECT ENGINEER

BRIDGE NO
POST MILES 2.0

IERBYS TEMPORARY IMPROVEMENTS - BUILDING

ADA GUIDELINES

SHEET G002

DESIGN DETAIL SHEET (ENGLISH) (REV. 03/14/12)

ORIGINAL SCALE IN INCHES FOR REDUCED PLANS 0 1 2 3

UNIT: 04
PROJECT NUMBER AND PHASE:
CONTRACT NO.: 0120F4

DISREGARD PRINTS BEARING EARLIER REVISION DATES

REVISION DATES ___ ___ ___ ___

SHEET 03 OF 66

C:\Users\jabraham\Documents\IERBYS\56185_Gateway Park - JAbraham - 3-27-13.rvt

DIST	COUNTY	ROUTE	POST MILES TOTAL PROJECT	SHEET No	TOTAL SHEETS
04	ALA	80	2.0	1204i	1204

REGISTERED ARCHITECT — DATE 03/27/13

PLANS APPROVAL DATE

LICENSED ARCHITECT — GREGORY P. BAKER — C-16884 — 10.31.2013 RENEWAL DATE — STATE OF CALIFORNIA

The state of California or its officers or agents shall not be responsible for the accuracy or completeness of scanned copies of this plan sheet.

HNTB CORPORATION
1111 BROADWAY
9TH FLOOR
OAKLAND, CA 94607

HNTB Corporation
Engineers Architects Planners

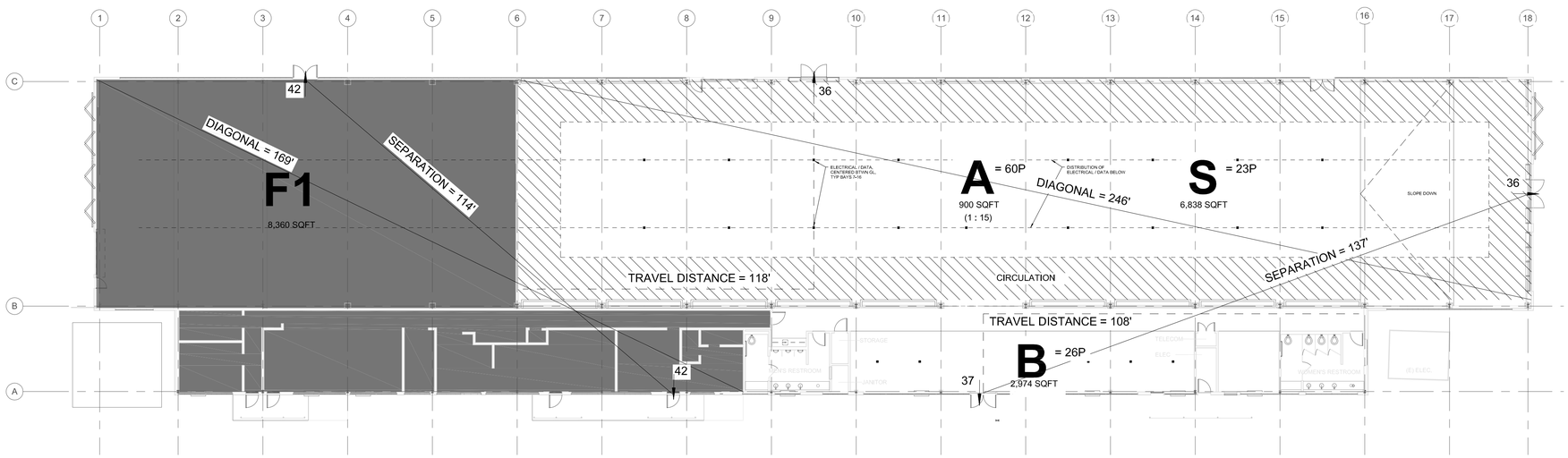

CODE:

TYPE III B, A-2 / 1-3 AND F-1 1 STORY BUILDING.
SPRINKLERS PROVIDED THROUGHOUT BUILDING.

NON-SEPARATED USE APPROACH PER CBC 508.3:
BASIC ALLOWABLE AREA = 9500 SQFT.
INCREASE FOR SPRINKLERS OF I's = 3: 28,500. 9,500 + 28,500 = 38,000 SQFT ALLOWABLE.

ACTUAL = 12,640 SQFT + 2,974 SQFT = 15,614 SQFT.

THEREFORE OCCUPANCY SEPARATIONS NOT REQUIRED PER CBC 508.3.3.

MAX TRAVEL DISTANCE = 250 FT

MIN. EXIT SEPARATION = 1/3 DIAGONAL

RENOVATED AREA:

TYPE S: 23 OCCUPANTS
6,838 SQFT @ 1 : 300

TYPE B: 26 OCCUPANTS
2,574 SQFT @ 1 : 100

TYPE A: 60 OCCUPANTS
900 SQFT @ 1 : 15

UNRENOVATED AREA:

TYPE F1: 84 OCCUPANTS
8,360 SQFT @ 1 : 100

TOTAL: 193 OCCUPANTS

EXIT WIDTH:

REQUIRED EXIT WIDTH, RENOVATED AREA
= 109 OCCUPANTS x .2"
= 21.8" REQUIRED

PROVIDED EXIT WIDTH, RENOVATED AREA
= 72" x 3
= 216" PROVIDED

NOTES:

EXIT DOORS ARE REQUIRED TO SWING OUTWARD PER CODE
PANIC HARDWARE IS REQUIRED ON ALL EXIT DOORS

N

3/27/2013 8:48:24 PM

SAN FRANCISCO OAKLAND BAY BRIDGE
EAST SPAN SEISMIC SAFETY PROJECT

Quincy Wong
DESIGN OVERSIGHT
03/27/13
SIGN OFF DATE

	BY	CHECKED
DESIGN	COREY SCHURR	GREGORY BAKER
DETAILS		
QUANTITIES		

PREPARED FOR THE
STATE OF CALIFORNIA
DEPARTMENT OF TRANSPORTATION

KAREN Y. WANG
PROJECT ENGINEER

BRIDGE NO
POST MILES 2.0

IERBYS TEMPORARY IMPROVEMENTS - BUILDING
CODE / LIFE SAFETY

SHEET G003

DESIGN DETAIL SHEET (ENGLISH) (REV. 03/14/12)

ORIGINAL SCALE IN INCHES FOR REDUCED PLANS 0 1 2 3

UNIT: 04
PROJECT NUMBER AND PHASE:
CONTRACT NO.: 0120F4

DISREGARD PRINTS BEARING EARLIER REVISION DATES

REVISION DATES

SHEET 04 OF 79

C:\Users\cschurr\Documents\56185_Gateway Park - Central_cschurr.rvt

DIST	COUNTY	ROUTE	POST MILES TOTAL PROJECT	SHEET No	TOTAL SHEETS
04	ALA	80	2.0	1204j	1204

REGISTERED ARCHITECT — DATE 03/27/13

PLANS APPROVAL DATE

LICENSED ARCHITECT — GREGORY P. BAKER — C-16884 — 10.31.2013 RENEWAL DATE — STATE OF CALIFORNIA

The state of California or its officers or agents shall not be responsible for the accuracy or completeness of scanned copies of this plan sheet.

HNTB CORPORATION
1111 BROADWAY
9TH FLOOR
OAKLAND, CA 94607

HNTB Corporation
Engineers Architects Planners

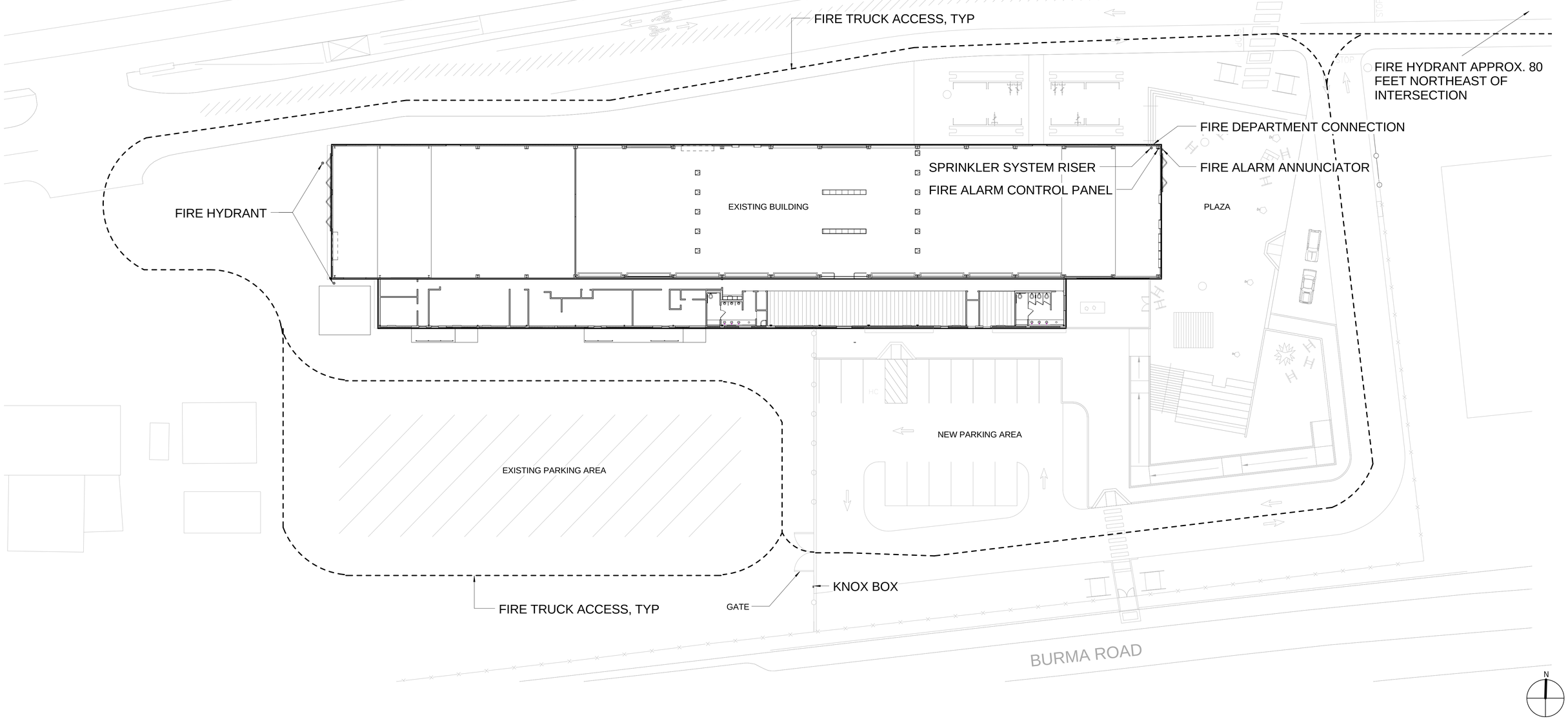

SITE PLAN (1)
1" = 20'-0"

SAN FRANCISCO OAKLAND BAY BRIDGE
EAST SPAN SEISMIC SAFETY PROJECT

IERBYS TEMPORARY IMPROVEMENTS - BUILDING

FIRE DEPARTMENT ACCESS

SHEET G004

Quincy Wong
DESIGN OVERSIGHT
03/27/13
SIGN OFF DATE

	BY	CHECKED
DESIGN	COREY SCHURR	GREGORY BAKER
DETAILS		
QUANTITIES		

PREPARED FOR THE
STATE OF CALIFORNIA
DEPARTMENT OF TRANSPORTATION

KAREN Y. WANG
PROJECT ENGINEER

BRIDGE NO
POST MILES 2.0

DESIGN DETAIL SHEET (ENGLISH) (REV. 03/14/12)

ORIGINAL SCALE IN INCHES FOR REDUCED PLANS 0 1 2 3

UNIT: 04
PROJECT NUMBER AND PHASE:
CONTRACT NO.: 0120F4

DISREGARD PRINTS BEARING EARLIER REVISION DATES

REVISION DATES ___ ___ ___ ___

SHEET 05 OF 66

C:\Users\jabraham\Documents\IERBYS\56185_Gateway Park - JAbraham - 3-27-13.rvt

3/27/2013 9:05:14 PM

DIST	COUNTY	ROUTE	POST MILES TOTAL PROJECT	SHEET No	TOTAL SHEETS
04	ALA	80	2.0	1204k	1204

REGISTERED ARCHITECT — DATE 03/27/13

PLANS APPROVAL DATE

LICENSED ARCHITECT — GREGORY P. BAKER — C-16884 — 10.31.2013 RENEWAL DATE — STATE OF CALIFORNIA

The state of California or its officers or agents shall not be responsible for the accuracy or completeness of scanned copies of this plan sheet.

HNTB CORPORATION
1111 BROADWAY
9TH FLOOR
OAKLAND, CA 94607

HNTB Corporation
Engineers Architects Planners

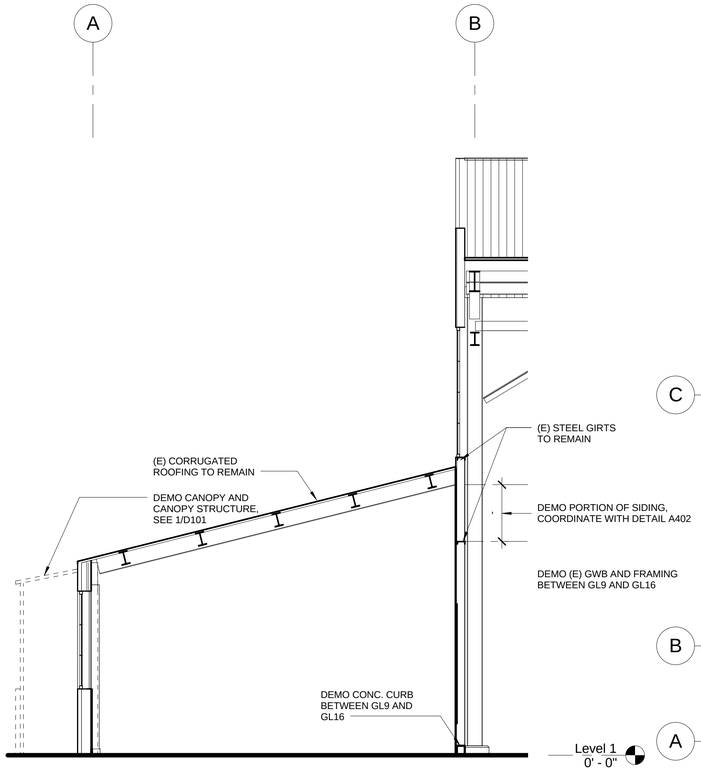

DEMO SECTION, TYP GL 9-16 (2)
1/4" = 1'-0"

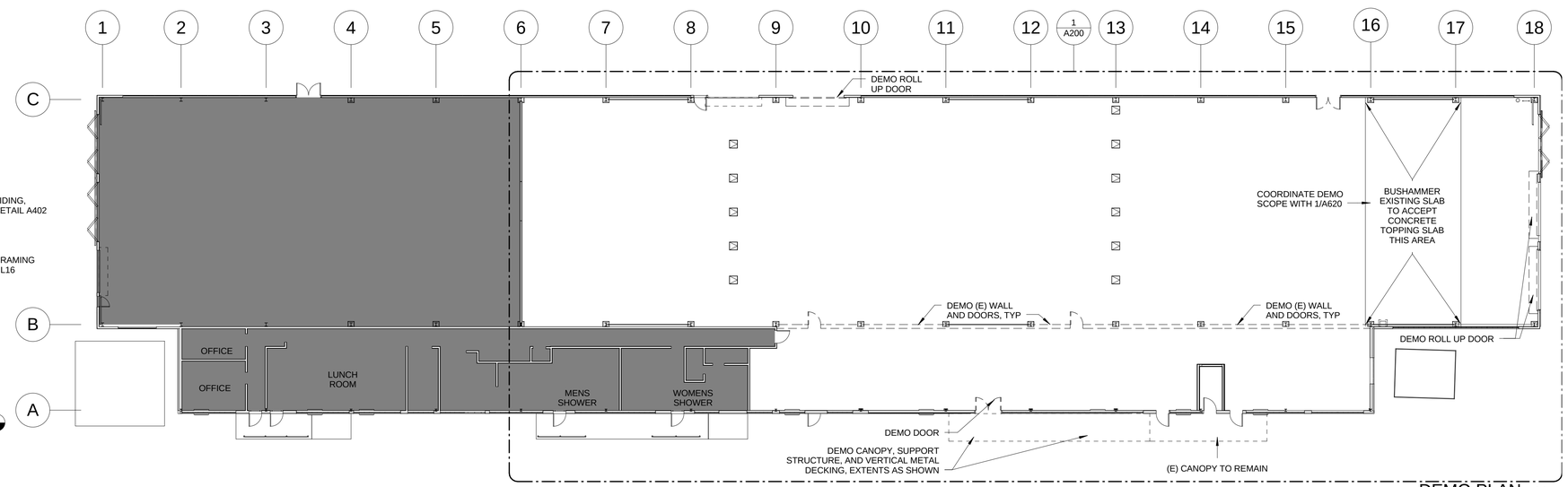

DEMO PLAN (1)
1/16" = 1'-0"

GENERAL NOTES:

1. DEMO FLUORESCENT LIGHTS
2. EXISITING CEILING HUNG HEATERS TO BE DEMOLISHED. CAP EXISTING VENTS, TYP
3. ALL ITEMS TO REMAIN, U.N.O.

N

3/27/2013 9:04:39 PM

SAN FRANCISCO OAKLAND BAY BRIDGE
EAST SPAN SEISMIC SAFETY PROJECT

Quincy Wong
DESIGN OVERSIGHT
03/27/13
SIGN OFF DATE

	BY	CHECKED
DESIGN	COREY SCHURR	GREGORY BAKER
DETAILS		
QUANTITIES		

PREPARED FOR THE
STATE OF CALIFORNIA
DEPARTMENT OF TRANSPORTATION

KAREN Y. WANG
PROJECT ENGINEER

BRIDGE NO
POST MILES 2.0

IERBYS TEMPORARY IMPROVEMENTS - BUILDING

DEMO FLOOR PLAN

SHEET D101

DESIGN DETAIL SHEET (ENGLISH) (REV. 03/14/12)

ORIGINAL SCALE IN INCHES FOR REDUCED PLANS 0 1 2 3

UNIT: 04
PROJECT NUMBER AND PHASE: CONTRACT NO.: 0120F4

DISREGARD PRINTS BEARING EARLIER REVISION DATES

REVISION DATES

SHEET 06 OF 66

C:\Users\jabraham\Documents\IERBYS\56185_Gateway Park - JAbraham - 3-27-13.rvt

DIST	COUNTY	ROUTE	POST MILES TOTAL PROJECT	SHEET No	TOTAL SHEETS
04	ALA	80	2.0	1204l	1204

REGISTERED ARCHITECT 03/27/13 DATE

PLANS APPROVAL DATE

LICENSED ARCHITECT
GREGORY P. BAKER
C-16884
10.31.2013
RENEWAL DATE
STATE OF CALIFORNIA

The state of California or its officers or agents shall not be responsible for the accuracy or completeness of scanned copies of this plan sheet.

HNTB CORPORATION
1111 BROADWAY
9TH FLOOR
OAKLAND, CA 94607

HNTB Corporation
Engineers Architects Planners

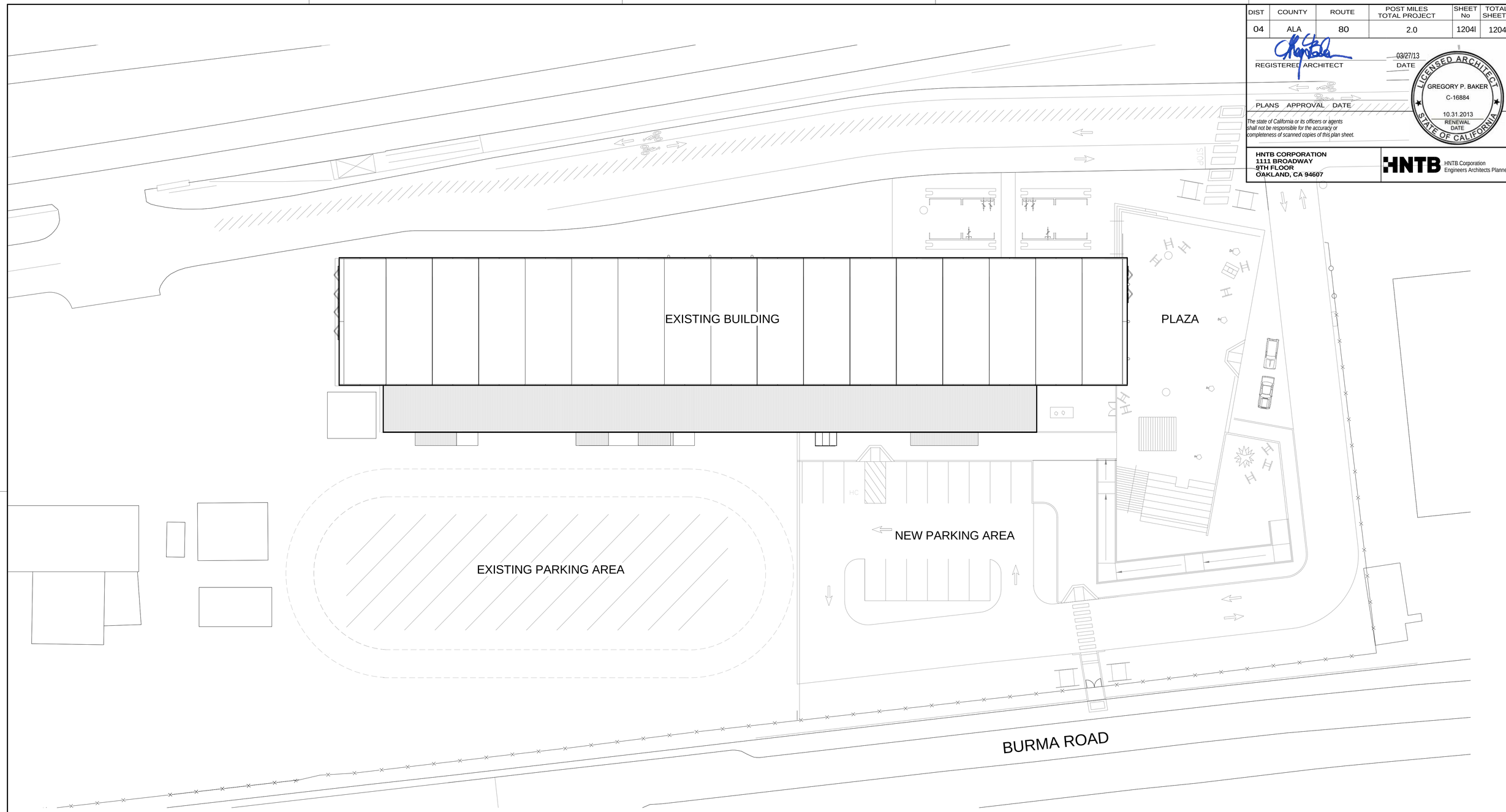

SITE PLAN
1" = 20'-0" (1)

N

3/27/2013 8:58:38 PM

SAN FRANCISCO OAKLAND BAY BRIDGE
EAST SPAN SEISMIC SAFETY PROJECT

IERBYS TEMPORARY IMPROVEMENTS - BUILDING

SITE PLAN

SHEET A100

Quincy Wong
DESIGN OVERSIGHT

03/27/13
SIGN OFF DATE

	BY	CHECKED
DESIGN	COREY SCHURR	GREGORY BAKER
DETAILS	BY	CHECKED
QUANTITIES	BY	CHECKED

PREPARED FOR THE
STATE OF CALIFORNIA
DEPARTMENT OF TRANSPORTATION

KAREN Y. WANG
PROJECT ENGINEER

BRIDGE NO

POST MILES 2.0

DESIGN DETAIL SHEET (ENGLISH) (REV. 03/14/12)

ORIGINAL SCALE IN INCHES FOR REDUCED PLANS 0 1 2 3

UNIT: 04
PROJECT NUMBER AND PHASE:
CONTRACT NO.: 0120F4

DISREGARD PRINTS BEARING EARLIER REVISION DATES

REVISION DATES

SHEET 07 OF 66

C:\Users\jabraham\Documents\IERBYS\56185_Gateway Park - JAbraham - 3-27-13.rvt

DIST	COUNTY	ROUTE	POST MILES TOTAL PROJECT	SHEET No	TOTAL SHEETS
04	ALA	80	2.0	1204m	1204

REGISTERED ARCHITECT 03/27/13 DATE

LICENSED ARCHITECT
GREGORY P. BAKER
C-16884
10.31.2013
RENEWAL DATE
STATE OF CALIFORNIA

PLANS APPROVAL DATE

The state of California or its officers or agents shall not be responsible for the accuracy or completeness of scanned copies of this plan sheet.

HNTB CORPORATION
1111 BROADWAY
9TH FLOOR
OAKLAND, CA 94607

HNTB Corporation
Engineers Architects Planners

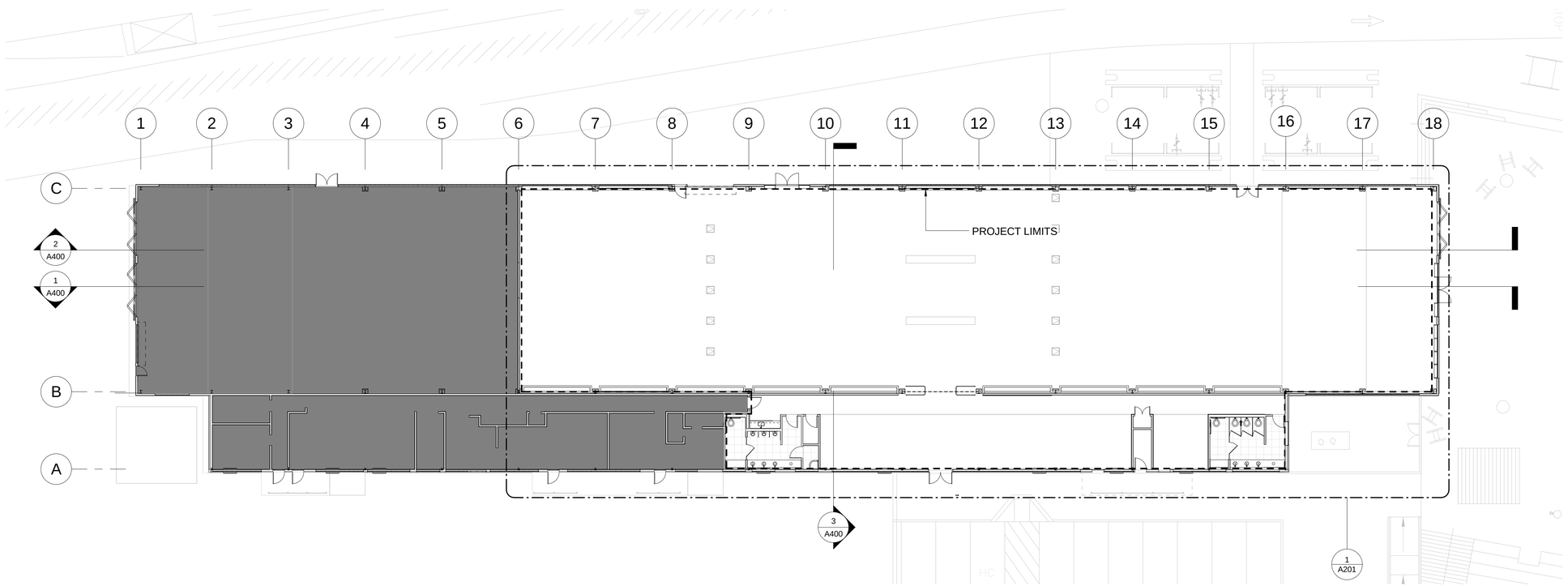

OVERALL FLOOR PLAN (1)
1/16" = 1'-0"

N

3/27/2013 8:58:44 PM

SAN FRANCISCO OAKLAND BAY BRIDGE
EAST SPAN SEISMIC SAFETY PROJECT

IERBYS TEMPORARY IMPROVEMENTS - BUILDING

FLOOR PLAN

SHEET A101

Quincy Wong
DESIGN OVERSIGHT

03/27/13
SIGN OFF DATE

	BY	CHECKED
DESIGN	COREY SCHURR	GREGORY BAKER
DETAILS	BY	CHECKED
QUANTITIES	BY	CHECKED

PREPARED FOR THE
STATE OF CALIFORNIA
DEPARTMENT OF TRANSPORTATION

KAREN Y. WANG
PROJECT ENGINEER

BRIDGE NO

POST MILES 2.0

DESIGN DETAIL SHEET (ENGLISH) (REV. 03/14/12)

ORIGINAL SCALE IN INCHES FOR REDUCED PLANS 0 1 2 3

UNIT: 04
PROJECT NUMBER AND PHASE: CONTRACT NO.: 0120F4

DISREGARD PRINTS BEARING EARLIER REVISION DATES

REVISION DATES				SHEET	OF
___	___	___	___	08	66

C:\Users\jabraham\Documents\IERBYS\56185_Gateway Park - JAbraham - 3-27-13.rvt

DIST	COUNTY	ROUTE	POST MILES TOTAL PROJECT	SHEET No	TOTAL SHEETS
04	ALA	80	2.0	1204n	1204

REGISTERED ARCHITECT — DATE 03/27/13

PLANS APPROVAL DATE

LICENSED ARCHITECT — GREGORY P. BAKER — C-16884 — 10.31.2013 RENEWAL DATE — STATE OF CALIFORNIA

The state of California or its officers or agents shall not be responsible for the accuracy or completeness of scanned copies of this plan sheet.

HNTB CORPORATION
1111 BROADWAY
9TH FLOOR
OAKLAND, CA 94607

HNTB Corporation
Engineers Architects Planners

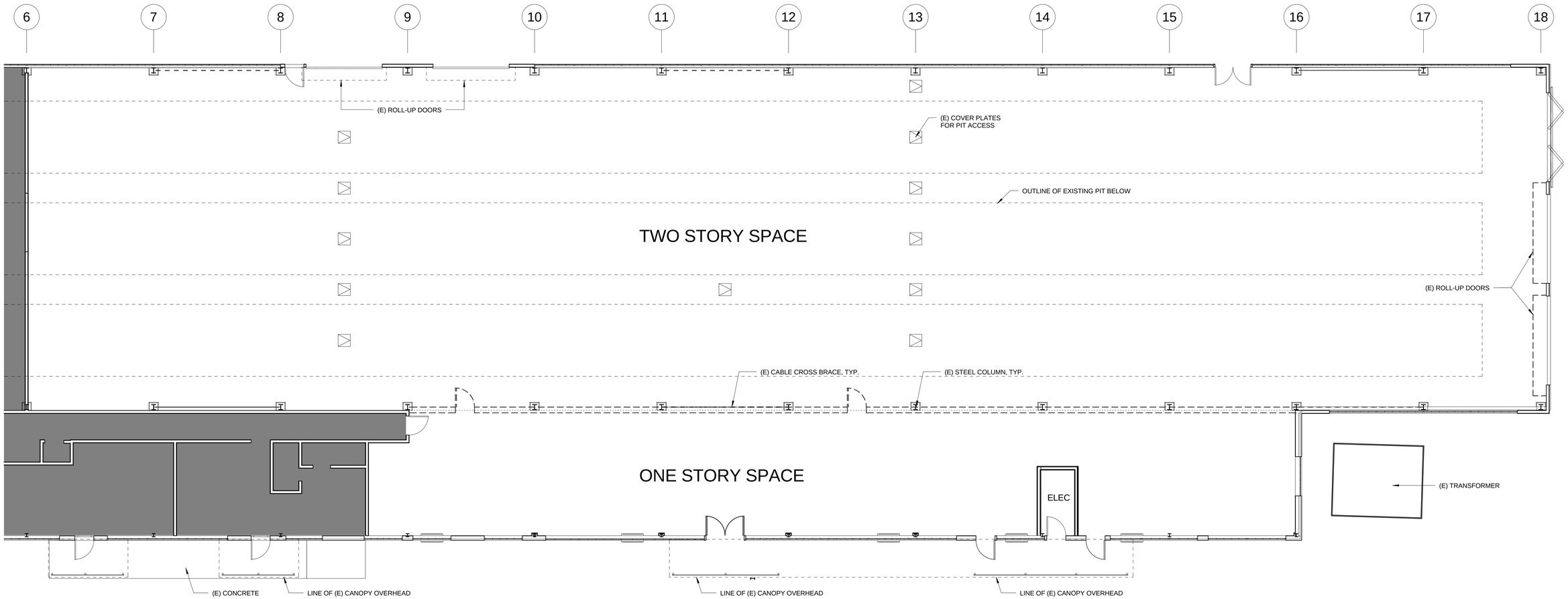

EXISTING FLOOR PLAN (1)
1/8" = 1'-0"

N

3/27/2013 8:58:50 PM

SAN FRANCISCO OAKLAND BAY BRIDGE
EAST SPAN SEISMIC SAFETY PROJECT

IERBYS TEMPORARY IMPROVEMENTS - BUILDING

EXISTING FLOOR PLAN

SHEET A200

Quincy Wong
DESIGN OVERSIGHT

03/27/13
SIGN OFF DATE

	BY	CHECKED
DESIGN	COREY SCHURR	GREGORY BAKER
DETAILS		
QUANTITIES		

PREPARED FOR THE
STATE OF CALIFORNIA
DEPARTMENT OF TRANSPORTATION

KAREN Y. WANG
PROJECT ENGINEER

BRIDGE NO

POST MILES 2.0

DESIGN DETAIL SHEET (ENGLISH) (REV. 03/14/12)

ORIGINAL SCALE IN INCHES FOR REDUCED PLANS 0 1 2 3

UNIT: 04
PROJECT NUMBER AND PHASE: CONTRACT NO.: 0120F4

DISREGARD PRINTS BEARING EARLIER REVISION DATES

REVISION DATES ___ ___ ___ ___

SHEET 09 OF 66

C:\Users\jabraham\Documents\IERBYS\56185_Gateway Park - JAbraham - 3-27-13.rvt

DIST	COUNTY	ROUTE	POST MILES TOTAL PROJECT	SHEET No	TOTAL SHEETS
04	ALA	80	2.0	1204o	1204

REGISTERED ARCHITECT — DATE 03/27/13

PLANS APPROVAL DATE

LICENSED ARCHITECT — GREGORY P. BAKER — C-16884 — 10.31.2013 RENEWAL DATE — STATE OF CALIFORNIA

The state of California or its officers or agents shall not be responsible for the accuracy or completeness of scanned copies of this plan sheet.

HNTB CORPORATION
1111 BROADWAY
9TH FLOOR
OAKLAND, CA 94607

HNTB Corporation
Engineers Architects Planners

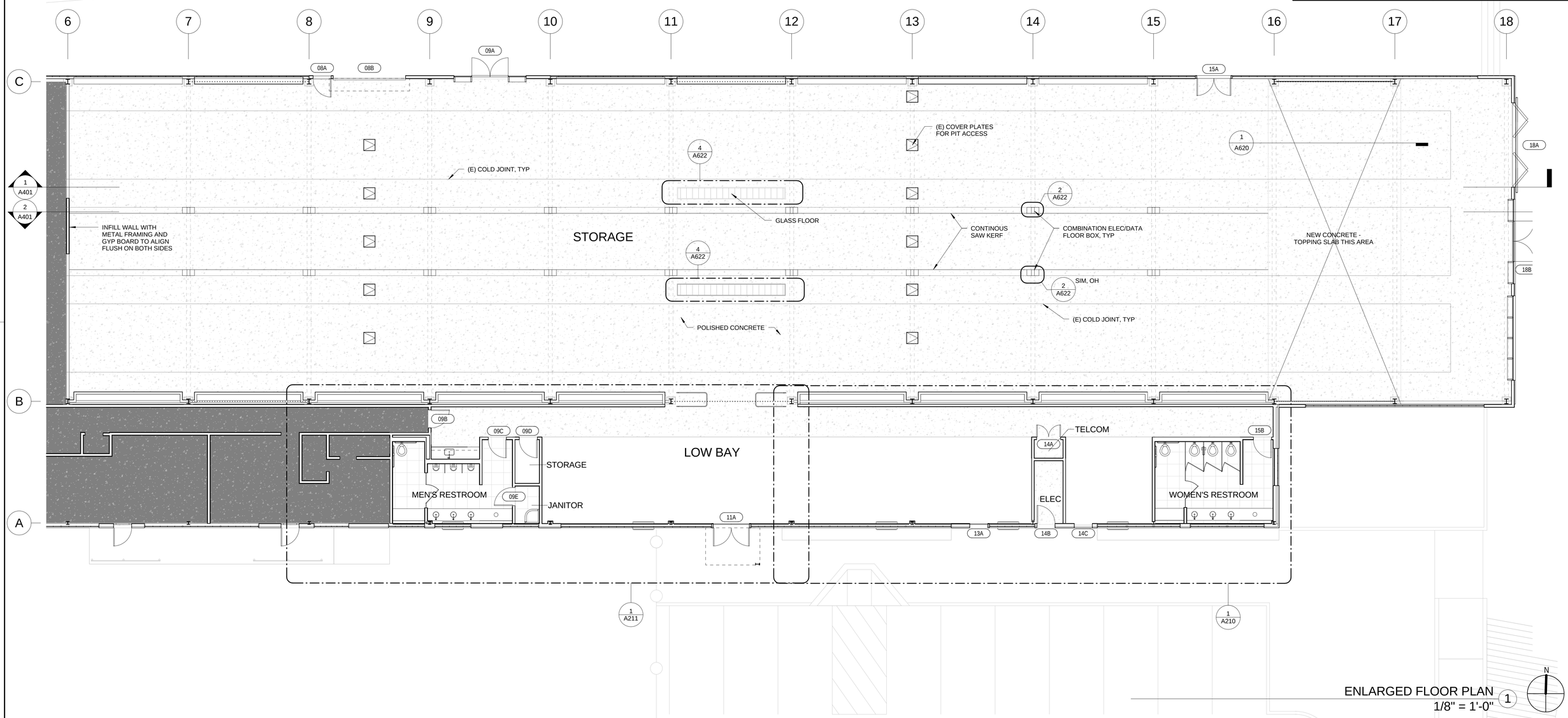

ENLARGED FLOOR PLAN 1
1/8" = 1'-0"

N

3/27/2013 9:06:39 PM

SAN FRANCISCO OAKLAND BAY BRIDGE EAST SPAN SEISMIC SAFETY PROJECT

IERBYS TEMPORARY IMPROVEMENTS - BUILDING

ENLARGED FLOOR PLAN

SHEET A201

Quincy Wong
DESIGN OVERSIGHT

03/27/13
SIGN OFF DATE

	BY	CHECKED
DESIGN	COREY SCHURR	GREGORY BAKER
DETAILS	BY	CHECKED
QUANTITIES	BY	CHECKED

PREPARED FOR THE STATE OF CALIFORNIA DEPARTMENT OF TRANSPORTATION

KAREN Y. WANG
PROJECT ENGINEER

BRIDGE NO

POST MILES 2.0

DESIGN DETAIL SHEET (ENGLISH) (REV. 03/14/12)

ORIGINAL SCALE IN INCHES FOR REDUCED PLANS 0 1 2 3

UNIT: 04
PROJECT NUMBER AND PHASE: CONTRACT NO.: 0120F4

DISREGARD PRINTS BEARING EARLIER REVISION DATES

REVISION DATES ___ ___ ___ ___

SHEET 10 OF 66

C:\Users\jabraham\Documents\IERBYS\56185_Gateway Park - JAbraham - 3-27-13.rvt

DIST	COUNTY	ROUTE	POST MILES TOTAL PROJECT	SHEET No	TOTAL SHEETS
04	ALA	80	2.0	1204p	1204

REGISTERED ARCHITECT — DATE 03/27/13

PLANS APPROVAL DATE

LICENSED ARCHITECT — GREGORY P. BAKER — C-16884 — 10.31.2013 RENEWAL DATE — STATE OF CALIFORNIA

The state of California or its officers or agents shall not be responsible for the accuracy or completeness of scanned copies of this plan sheet.

HNTB CORPORATION
1111 BROADWAY
9TH FLOOR
OAKLAND, CA 94607

HNTB Corporation Engineers Architects Planners

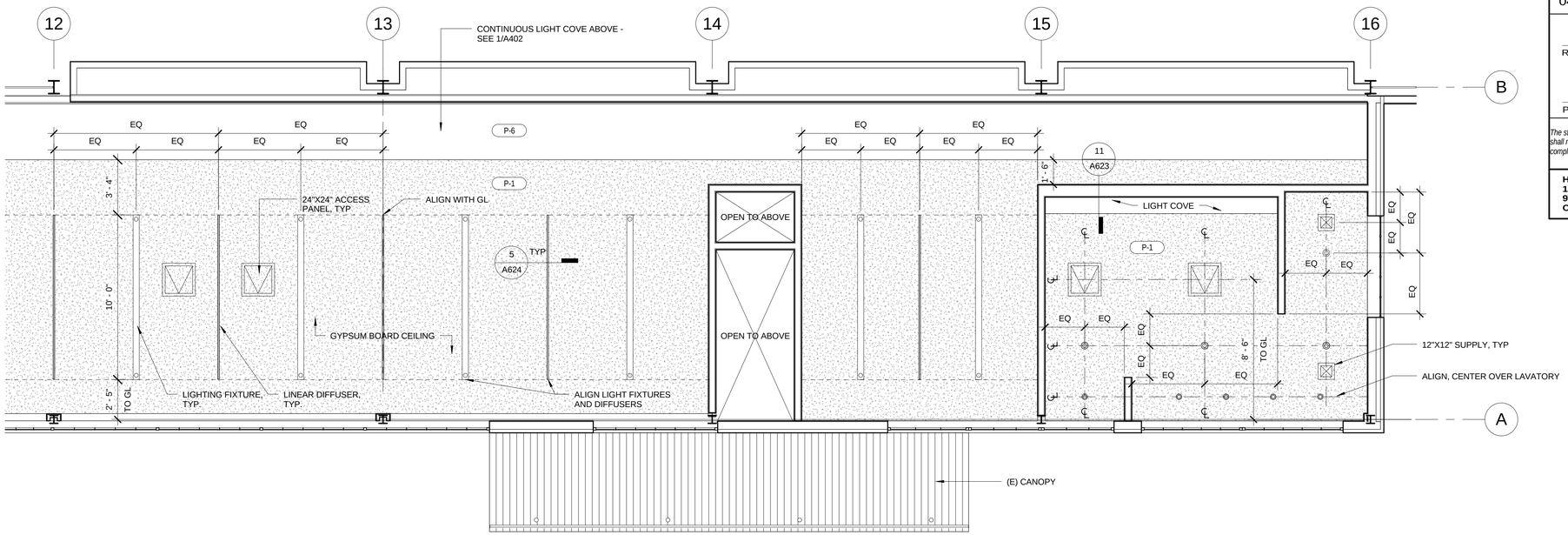

LOW BAY EAST - RCP (2)
1/4" = 1'-0"

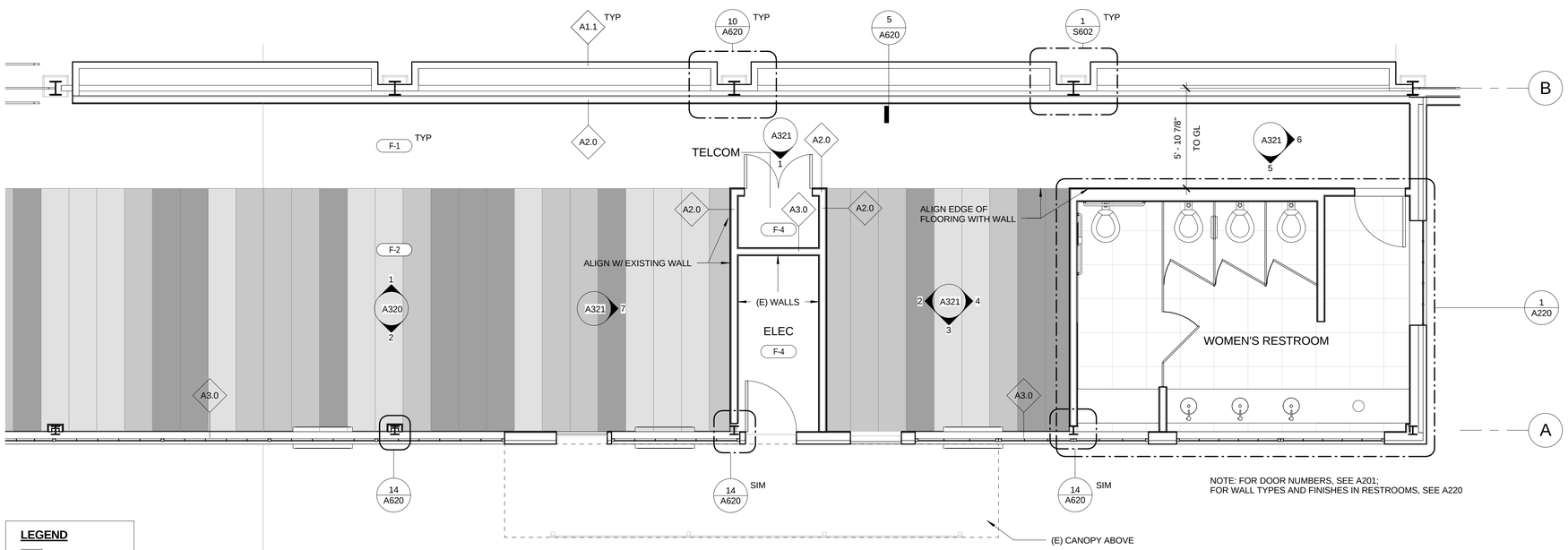

LOW BAY EAST (1)
1/4" = 1'-0"

LEGEND

- COLOR 1
- COLOR 2
- COLOR 3

*FOR FINISHES, SEE A600

N

3/27/2013 9:07:45 PM

SAN FRANCISCO OAKLAND BAY BRIDGE EAST SPAN SEISMIC SAFETY PROJECT

IERBYS TEMPORARY IMPROVEMENTS - BUILDING

ENLARGED FLOOR PLAN - LOW BAY

SHEET A210

Quincy Wong — DESIGN OVERSIGHT
03/27/13 — SIGN OFF DATE

	BY	CHECKED
DESIGN	COREY SCHURR	GREGORY BAKER
DETAILS	BY	CHECKED
QUANTITIES	BY	CHECKED

PREPARED FOR THE STATE OF CALIFORNIA DEPARTMENT OF TRANSPORTATION

KAREN Y. WANG — PROJECT ENGINEER

BRIDGE NO
POST MILES 2.0

DESIGN DETAIL SHEET (ENGLISH) (REV. 03/14/12)

ORIGINAL SCALE IN INCHES FOR REDUCED PLANS 0 1 2 3

UNIT: 04
PROJECT NUMBER AND PHASE: CONTRACT NO.: 0120F4

DISREGARD PRINTS BEARING EARLIER REVISION DATES

REVISION DATES

SHEET 11 OF 66

C:\Users\jabraham\Documents\IERBYS\56185_Gateway Park - JAbraham - 3-27-13.rvt

DIST	COUNTY	ROUTE	POST MILES TOTAL PROJECT	SHEET No	TOTAL SHEETS
04	ALA	80	2.0	1204q	1204

REGISTERED ARCHITECT 03/27/13 DATE

PLANS APPROVAL DATE

LICENSED ARCHITECT GREGORY P. BAKER C-16884 10.31.2013 RENEWAL DATE STATE OF CALIFORNIA

The state of California or its officers or agents shall not be responsible for the accuracy or completeness of scanned copies of this plan sheet.

HNTB CORPORATION
1111 BROADWAY
9TH FLOOR
OAKLAND, CA 94607

HNTB Corporation Engineers Architects Planners

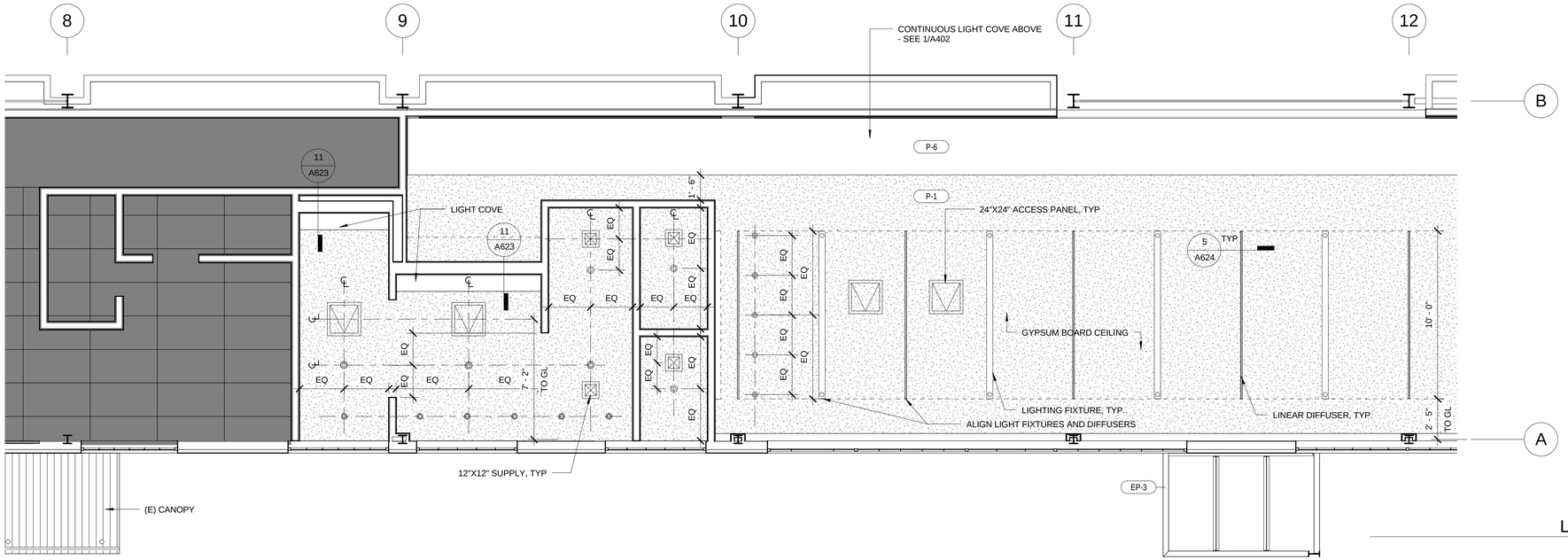

LOW BAY WEST - RCP (2)
1/4" = 1'-0"

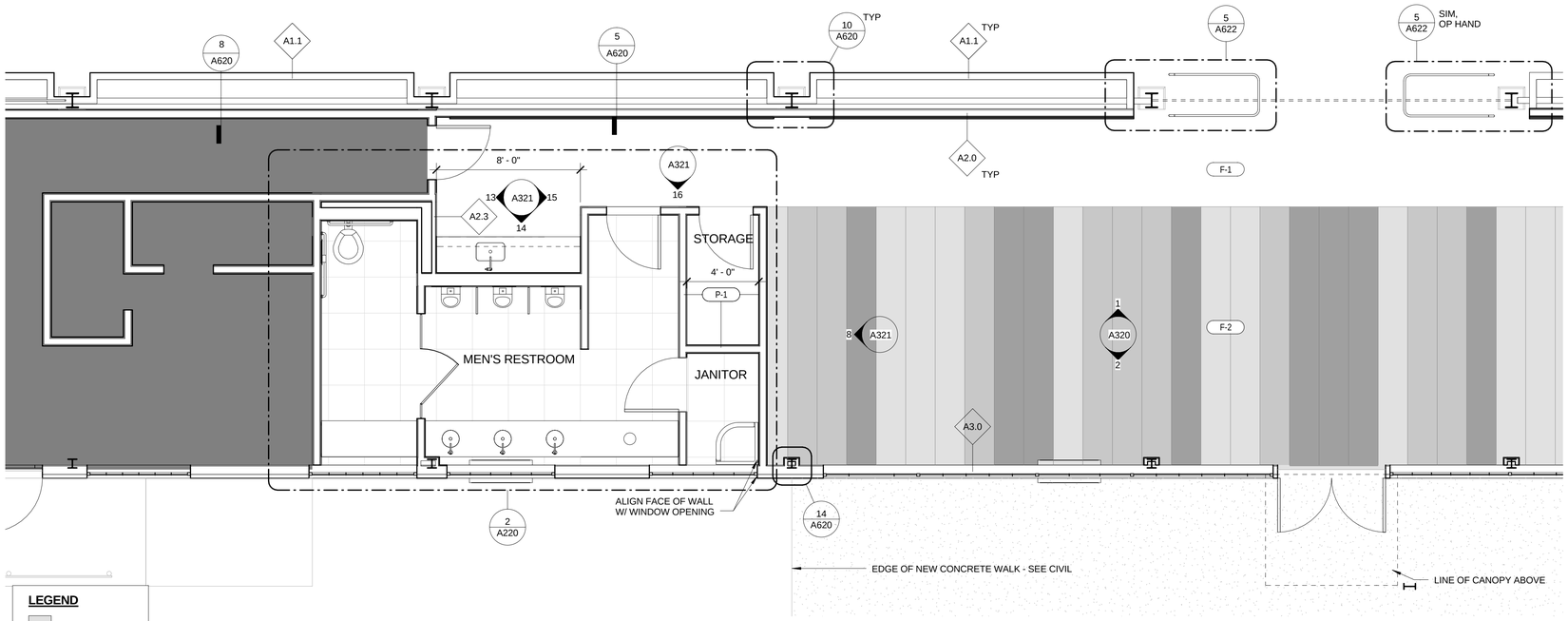

NOTE: FOR DOOR NUMBERS, SEE A201
FOR WALL TYPES, SEE A601

LOW BAY WEST (1)
1/4" = 1'-0"

LEGEND

- COLOR 1
- COLOR 2
- COLOR 3

*FOR FINISHES, SEE A600

N

3/27/2013 9:08:12 PM

SAN FRANCISCO OAKLAND BAY BRIDGE
EAST SPAN SEISMIC SAFETY PROJECT

IERBYS TEMPORARY IMPROVEMENTS - BUILDING

ENLARGED FLOOR PLAN - LOW BAY

SHEET A211

Quincy Wong
DESIGN OVERSIGHT

03/27/13
SIGN OFF DATE

	BY	CHECKED
DESIGN	COREY SCHURR	GREGORY BAKER
DETAILS	BY	CHECKED
QUANTITIES	BY	CHECKED

PREPARED FOR THE
STATE OF CALIFORNIA
DEPARTMENT OF TRANSPORTATION

KAREN Y. WANG
PROJECT ENGINEER

BRIDGE NO

POST MILES 2.0

DESIGN DETAIL SHEET (ENGLISH) (REV. 03/14/12)

ORIGINAL SCALE IN INCHES FOR REDUCED PLANS 0 1 2 3

UNIT: 04
PROJECT NUMBER AND PHASE:
CONTRACT NO.: 0120F4

DISREGARD PRINTS BEARING EARLIER REVISION DATES

REVISION DATES ___ ___ ___ ___

SHEET 12 OF 66

C:\Users\jabraham\Documents\IERBYS\56185_Gateway Park - JAbraham - 3-27-13.rvt

DIST	COUNTY	ROUTE	POST MILES TOTAL PROJECT	SHEET No	TOTAL SHEETS
04	ALA	80	2.0	1204r	1204

REGISTERED ARCHITECT — DATE 03/27/13

PLANS APPROVAL DATE

LICENSED ARCHITECT — GREGORY P. BAKER — C-16884 — 10.31.2013 RENEWAL DATE — STATE OF CALIFORNIA

The state of California or its officers or agents shall not be responsible for the accuracy or completeness of scanned copies of this plan sheet.

HNTB CORPORATION
1111 BROADWAY
9TH FLOOR
OAKLAND, CA 94607

HNTB Corporation
Engineers Architects Planners

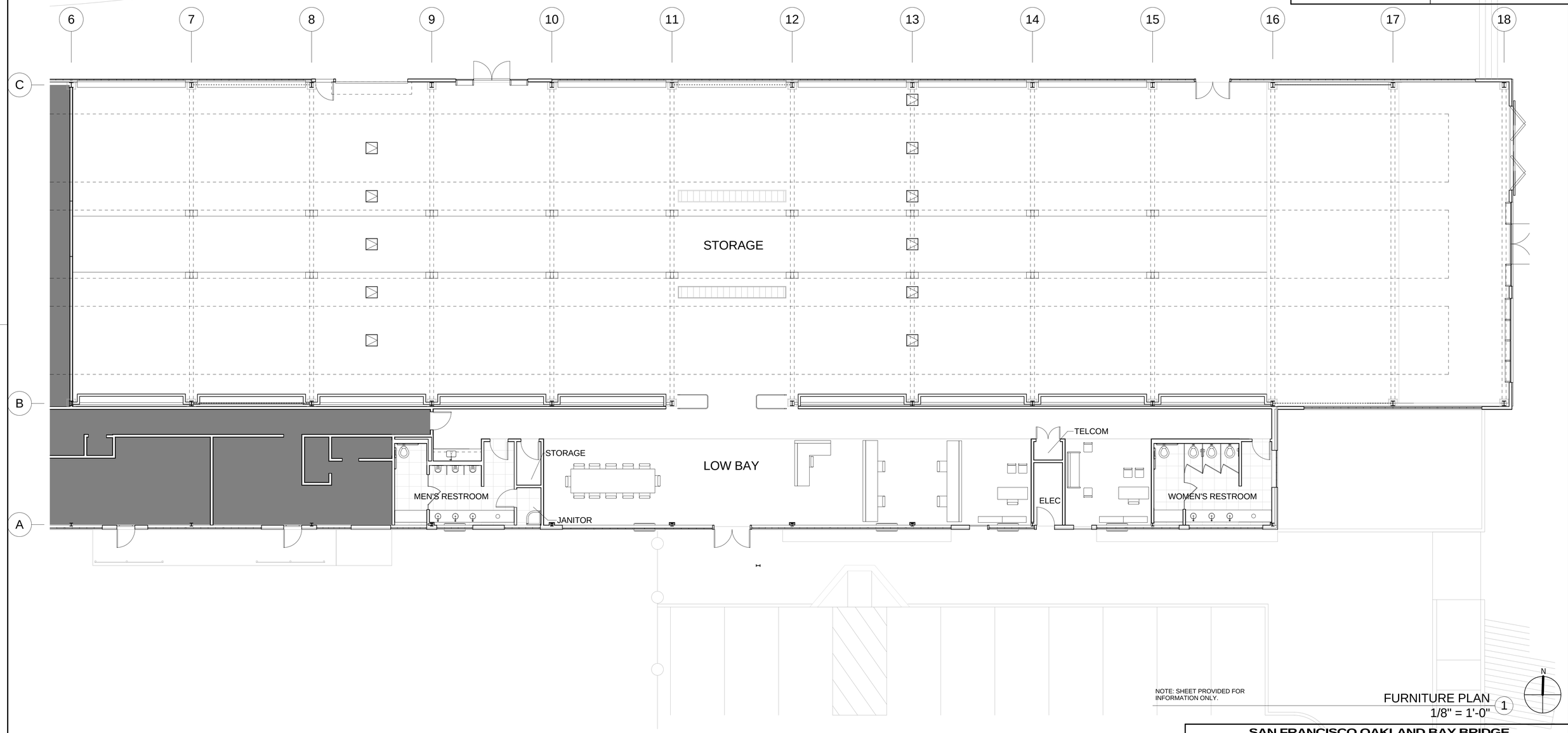

NOTE: SHEET PROVIDED FOR INFORMATION ONLY.

FURNITURE PLAN (1)
1/8" = 1'-0"

3/27/2013 9:08:48 PM

SAN FRANCISCO OAKLAND BAY BRIDGE
EAST SPAN SEISMIC SAFETY PROJECT

IERBYS TEMPORARY IMPROVEMENTS - BUILDING

FURNITURE PLAN

SHEET A212

Quincy Wong
DESIGN OVERSIGHT

03/27/13
SIGN OFF DATE

	BY	CHECKED
DESIGN	COREY SCHURR	GREGORY BAKER
DETAILS		
QUANTITIES		

PREPARED FOR THE
STATE OF CALIFORNIA
DEPARTMENT OF TRANSPORTATION

KAREN Y. WANG
PROJECT ENGINEER

BRIDGE NO
POST MILES 2.0

DESIGN DETAIL SHEET (ENGLISH) (REV. 03/14/12)

ORIGINAL SCALE IN INCHES FOR REDUCED PLANS 0 1 2 3

UNIT: 04
PROJECT NUMBER AND PHASE:
CONTRACT NO.: 0120F4

DISREGARD PRINTS BEARING EARLIER REVISION DATES

REVISION DATES ___ ___ ___ ___

SHEET 13 OF 66

C:\Users\jabraham\Documents\IERBYS\56185_Gateway Park - JAbraham - 3-27-13.rvt

DIST	COUNTY	ROUTE	POST MILES TOTAL PROJECT	SHEET No	TOTAL SHEETS
04	ALA	80	2.0	1204s	1204

REGISTERED ARCHITECT — DATE 03/27/13

PLANS APPROVAL DATE

LICENSED ARCHITECT — GREGORY P. BAKER — C-16884 — 10.31.2013 RENEWAL DATE — STATE OF CALIFORNIA

The state of California or its officers or agents shall not be responsible for the accuracy or completeness of scanned copies of this plan sheet.

HNTB CORPORATION
1111 BROADWAY
9TH FLOOR
OAKLAND, CA 94607

HNTB Corporation Engineers Architects Planners

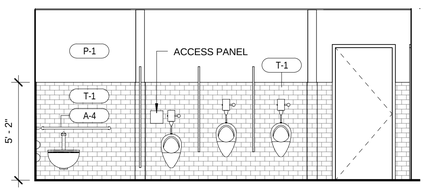

MEN'S - NORTH (10)
1/4" = 1'-0"

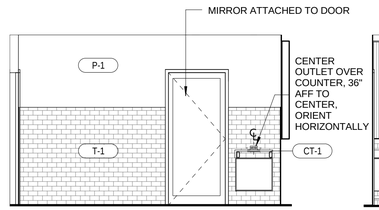

MEN'S - EAST (9)
1/4" = 1'-0"

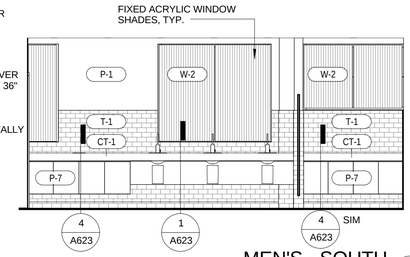

MEN'S - SOUTH (8)
1/4" = 1'-0"

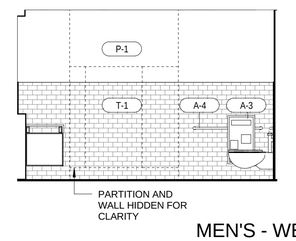

MEN'S - WEST (7)
1/4" = 1'-0"

FOR ADDITIONAL ACCESSIBILITY NOTES AND DIMENSIONS, SEE G002

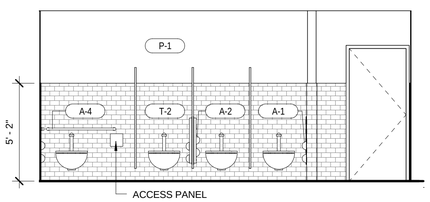

WOMEN'S - NORTH (6)
1/4" = 1'-0"

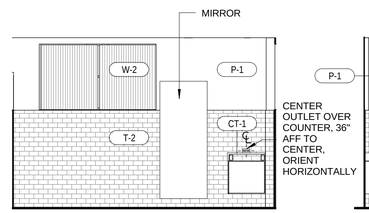

WOMEN'S - EAST (5)
1/4" = 1'-0"

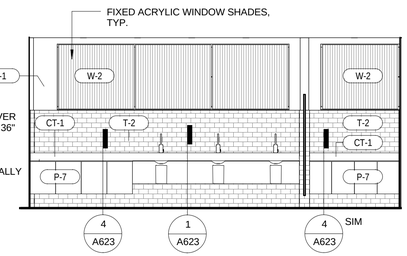

WOMEN'S - SOUTH (4)
1/4" = 1'-0"

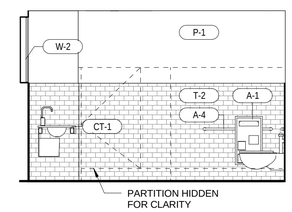

WOMEN'S - WEST (3)
1/4" = 1'-0"

A321
16

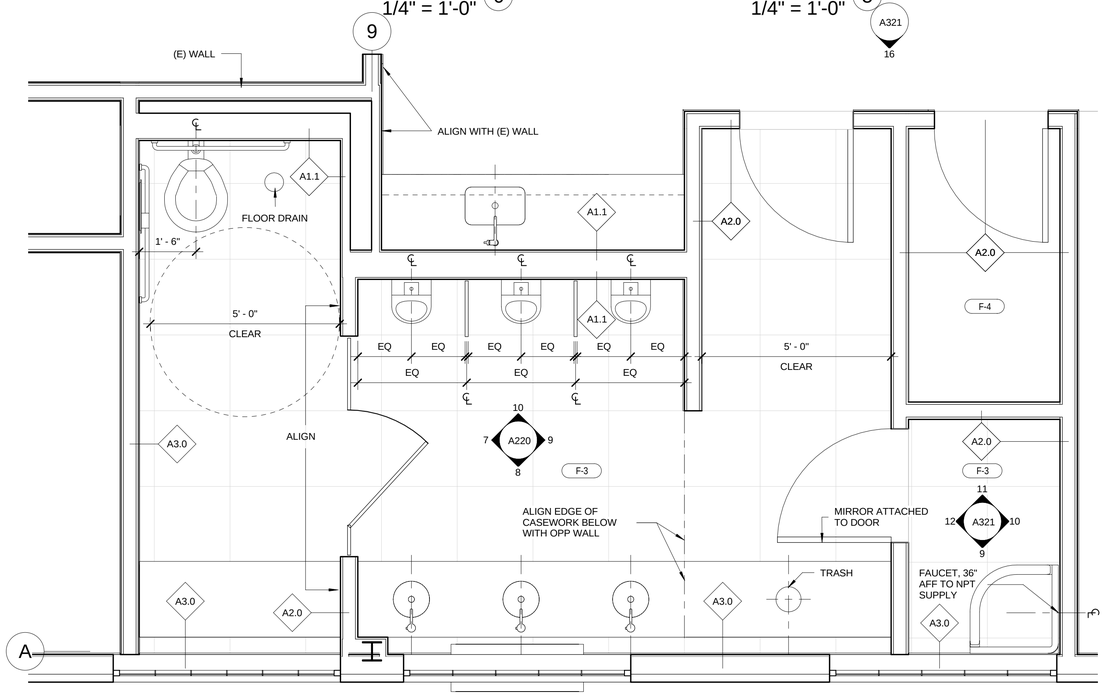

NOTE: FOR RCP INFO, SEE 2/A211

MEN'S RESTROOM (2)
1/2" = 1'-0"

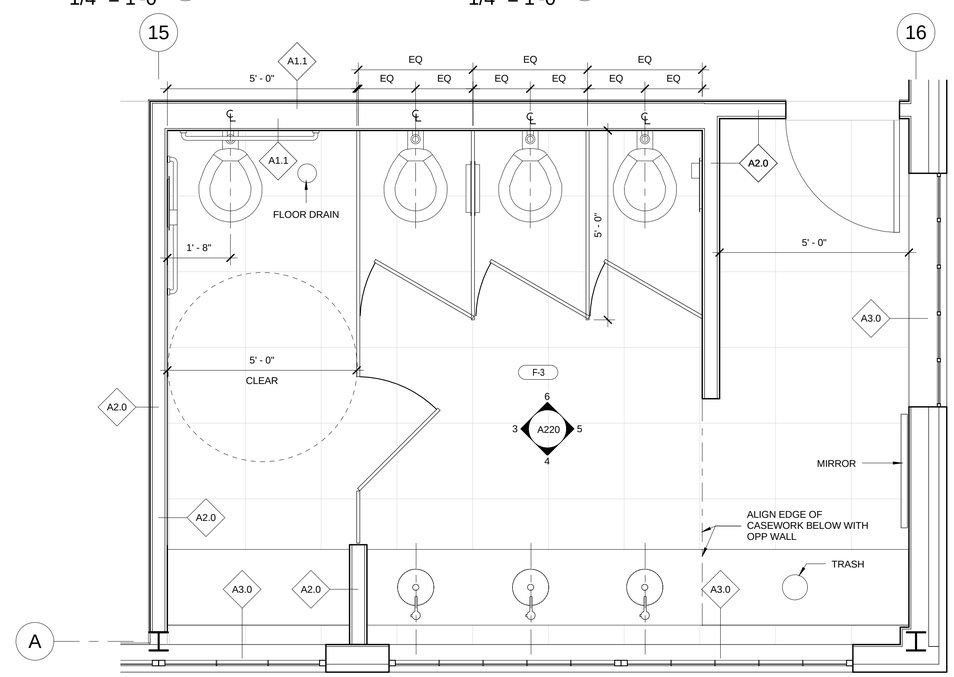

NOTE: FOR RCP INFO, SEE 2/A210

WOMEN'S RESTROOM (1)
1/2" = 1'-0"

N

3/27/2013 9:09:29 PM

SAN FRANCISCO OAKLAND BAY BRIDGE EAST SPAN SEISMIC SAFETY PROJECT

IERBYS TEMPORARY IMPROVEMENTS - BUILDING

RESTROOM PLANS AND ELEVATIONS

SHEET A220

Quincy Wong
DESIGN OVERSIGHT

03/27/13
SIGN OFF DATE

	BY	CHECKED
DESIGN	COREY SCHURR	GREGORY BAKER
DETAILS		
QUANTITIES		

PREPARED FOR THE STATE OF CALIFORNIA DEPARTMENT OF TRANSPORTATION

KAREN Y. WANG
PROJECT ENGINEER

BRIDGE NO
POST MILES 2.0

DESIGN DETAIL SHEET (ENGLISH) (REV. 03/14/12)

ORIGINAL SCALE IN INCHES FOR REDUCED PLANS 0 1 2 3

UNIT: 04
PROJECT NUMBER AND PHASE:
CONTRACT NO.: 0120F4

DISREGARD PRINTS BEARING EARLIER REVISION DATES

REVISION DATES

SHEET 14 OF 66

C:\Users\jabraham\Documents\IERBYS\56185_Gateway Park - JAbraham - 3-27-13.rvt

DIST	COUNTY	ROUTE	POST MILES TOTAL PROJECT	SHEET No	TOTAL SHEETS
04	ALA	80	2.0	1204t	1204

REGISTERED ARCHITECT — DATE 03/27/13

PLANS APPROVAL DATE

LICENSED ARCHITECT — GREGORY P. BAKER — C-16884 — 10.31.2013 RENEWAL DATE — STATE OF CALIFORNIA

The state of California or its officers or agents shall not be responsible for the accuracy or completeness of scanned copies of this plan sheet.

HNTB CORPORATION
1111 BROADWAY
9TH FLOOR
OAKLAND, CA 94607

HNTB Corporation Engineers Architects Planners

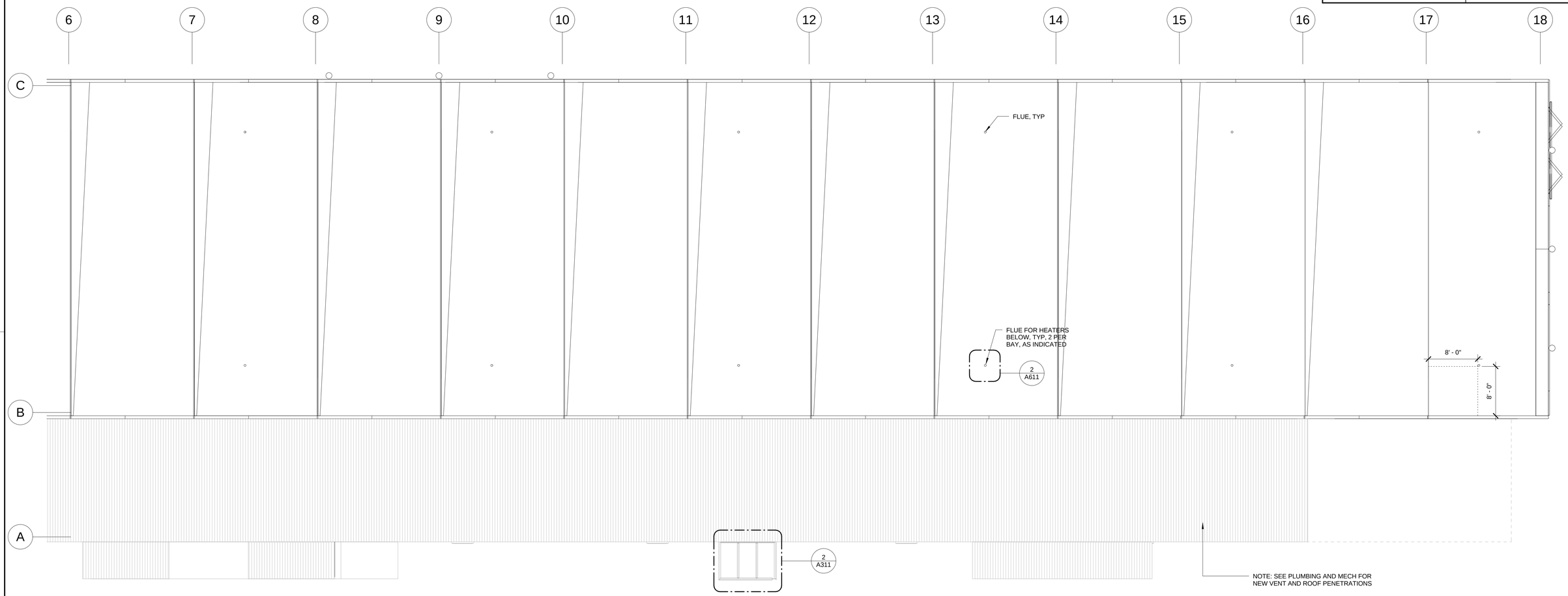

PARTIAL ROOF PLAN (1)
1/8" = 1'-0"

N

3/27/2013 9:00:10 PM

SAN FRANCISCO OAKLAND BAY BRIDGE
EAST SPAN SEISMIC SAFETY PROJECT

Quincy Wong
DESIGN OVERSIGHT
03/27/13
SIGN OFF DATE

	BY	CHECKED
DESIGN	COREY SCHURR	GREGORY BAKER
DETAILS		
QUANTITIES		

PREPARED FOR THE
STATE OF CALIFORNIA
DEPARTMENT OF TRANSPORTATION

KAREN Y. WANG
PROJECT ENGINEER

BRIDGE NO
POST MILES 2.0

IERBYS TEMPORARY IMPROVEMENTS - BUILDING

PARTIAL ROOF PLAN

SHEET A230

DESIGN DETAIL SHEET (ENGLISH) (REV. 03/14/12)

ORIGINAL SCALE IN INCHES FOR REDUCED PLANS 0 1 2 3

UNIT: 04
PROJECT NUMBER AND PHASE: CONTRACT NO.: 0120F4

DISREGARD PRINTS BEARING EARLIER REVISION DATES

REVISION DATES				SHEET	OF
				15	66

C:\Users\jabraham\Documents\IERBYS\56185_Gateway Park - JAbraham - 3-27-13.rvt

DIST	COUNTY	ROUTE	POST MILES TOTAL PROJECT	SHEET No	TOTAL SHEETS
04	ALA	80	2.0	1204u	1204

REGISTERED ARCHITECT — DATE 03/27/13

PLANS APPROVAL DATE

LICENSED ARCHITECT — GREGORY P. BAKER — C-16884 — 10.31.2013 RENEWAL DATE — STATE OF CALIFORNIA

The state of California or its officers or agents shall not be responsible for the accuracy or completeness of scanned copies of this plan sheet.

HNTB CORPORATION
1111 BROADWAY
9TH FLOOR
OAKLAND, CA 94607

HNTB Corporation
Engineers Architects Planners

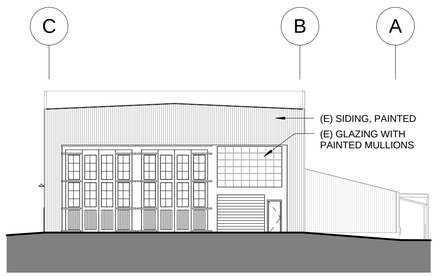

WEST ELEVATION (4)
1/16" = 1'-0"

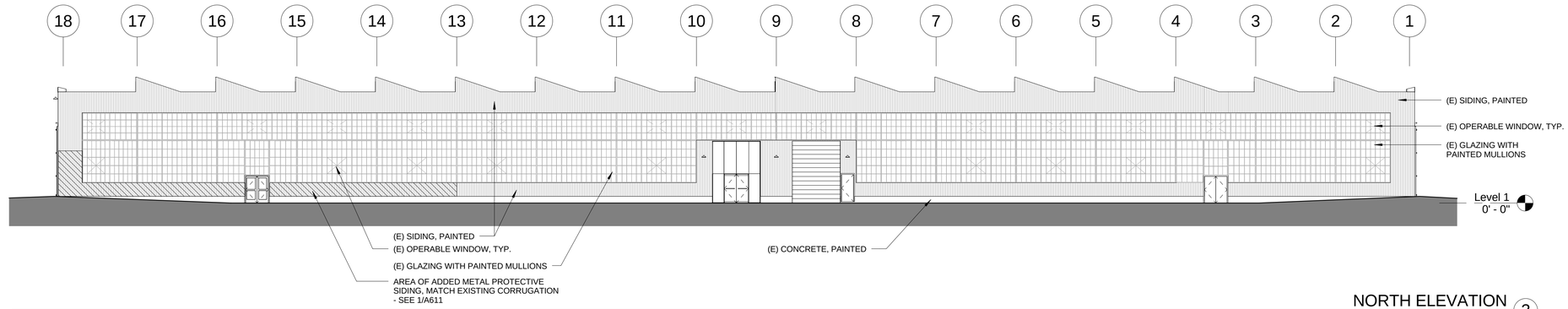

NORTH ELEVATION (3)
1/16" = 1'-0"

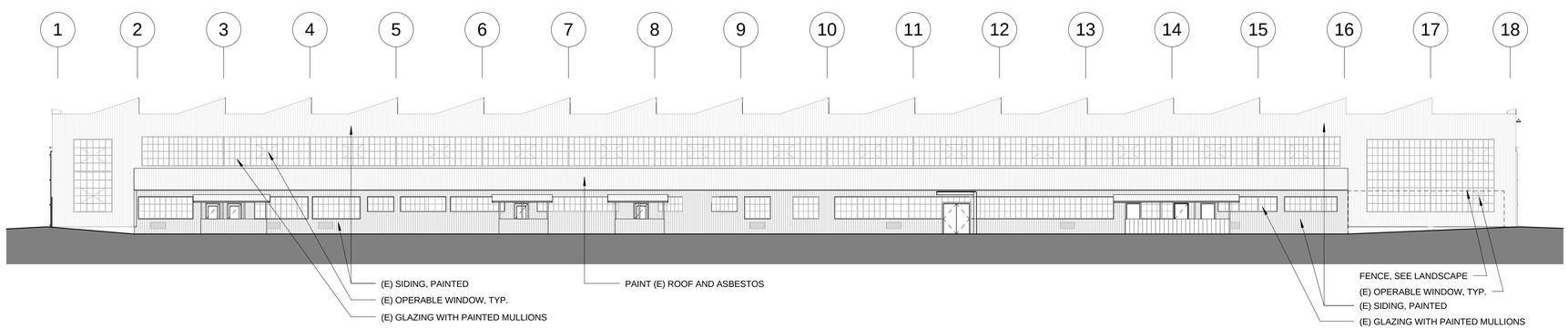

SOUTH ELEVATION (2)
1/16" = 1'-0"

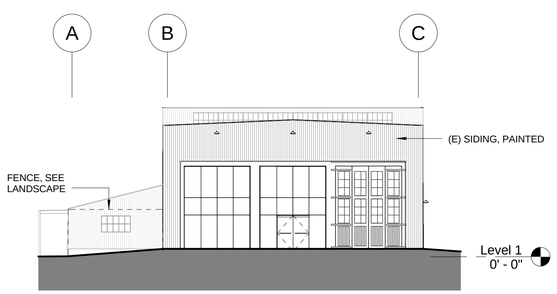

EAST ELEVATION (1)
1/16" = 1'-0"

NOTES:
FOR NOTES ON MATERIALS AND FINISHES, SEE 1/8" ENLARGED ELEVATIONS

SCOPE OF EXTERIOR PAINTING TO INCLUDE:
- ALL CORRUGATED SIDING, INCLUDING VERTICAL, SLOPED, AND SIDING AT ROOF AREAS (EP-1, UON)
- ALL WINDOW MULLIONS AND TRIM (M-1)
- ALL (E) LEAD FLASHING TO BE PAINTED (EP-1)
- ALL DOORS AND JAMBS, INCLUDING ROLL-UP DOORS
- ALL MISCELLANEOUS METAL AND HARDWARE

3/27/2013 9:00:33 PM

SAN FRANCISCO OAKLAND BAY BRIDGE
EAST SPAN SEISMIC SAFETY PROJECT

Quincy Wong
DESIGN OVERSIGHT

03/27/13
SIGN OFF DATE

	BY	CHECKED
DESIGN	COREY SCHURR	GREGORY BAKER
DETAILS		
QUANTITIES		

PREPARED FOR THE
STATE OF CALIFORNIA
DEPARTMENT OF TRANSPORTATION

KAREN Y. WANG
PROJECT ENGINEER

BRIDGE NO
POST MILES 2.0

IERBYS TEMPORARY IMPROVEMENTS - BUILDING

ELEVATIONS

SHEET A300

DESIGN DETAIL SHEET (ENGLISH) (REV. 03/14/12)

ORIGINAL SCALE IN INCHES FOR REDUCED PLANS 0 1 2 3

UNIT: 04
PROJECT NUMBER AND PHASE: CONTRACT NO.: 0120F4

DISREGARD PRINTS BEARING EARLIER REVISION DATES

REVISION DATES

SHEET 16 OF 66

C:\Users\jabraham\Documents\IERBYS\56185_Gateway Park - JAbraham - 3-27-13.rvt

DIST	COUNTY	ROUTE	POST MILES TOTAL PROJECT	SHEET No	TOTAL SHEETS
04	ALA	80	2.0	1204v	1204

REGISTERED ARCHITECT — DATE 03/27/13

PLANS APPROVAL DATE

LICENSED ARCHITECT — GREGORY P. BAKER — C-16884 — 10.31.2013 RENEWAL DATE — STATE OF CALIFORNIA

The state of California or its officers or agents shall not be responsible for the accuracy or completeness of scanned copies of this plan sheet.

HNTB CORPORATION
1111 BROADWAY
9TH FLOOR
OAKLAND, CA 94607

HNTB Corporation Engineers Architects Planners

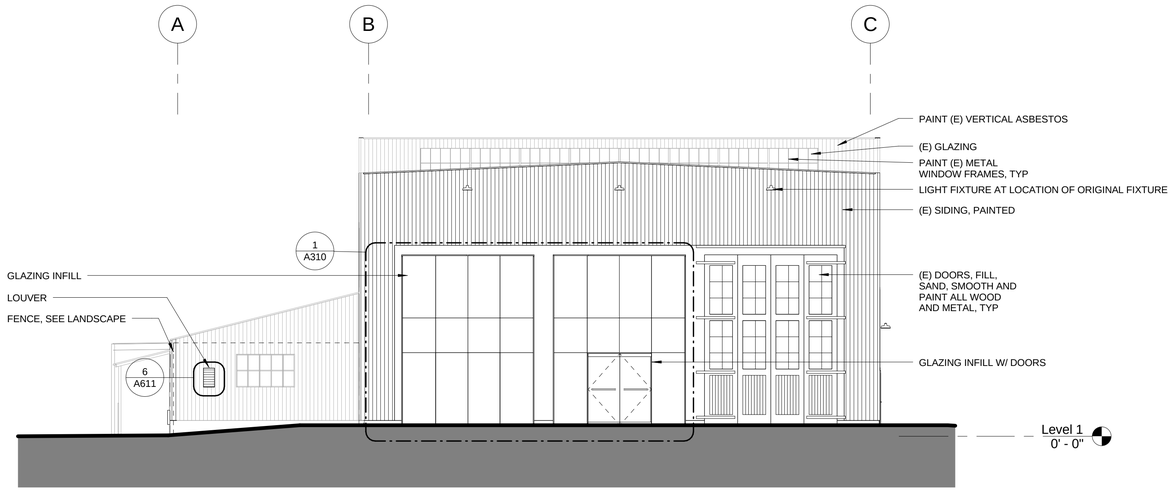

EAST ELEVATION 2
1/8" = 1'-0"

NOTES:

SCOPE OF EXTERIOR PAINTING TO INCLUDE:
- ALL CORRUGATED SIDING, INCLUDING VERTICAL, SLOPED, AND SIDING AT ROOF AREAS (EP-1, UON)
- ALL WINDOW MULLIONS AND TRIM (M-1)
- ALL (E) LEAD FLASHING TO BE PAINTED (EP-1)
- ALL DOORS AND JAMBS, INCLUDING ROLL-UP DOORS
- ALL MISCELLANEOUS METAL AND HARDWARE

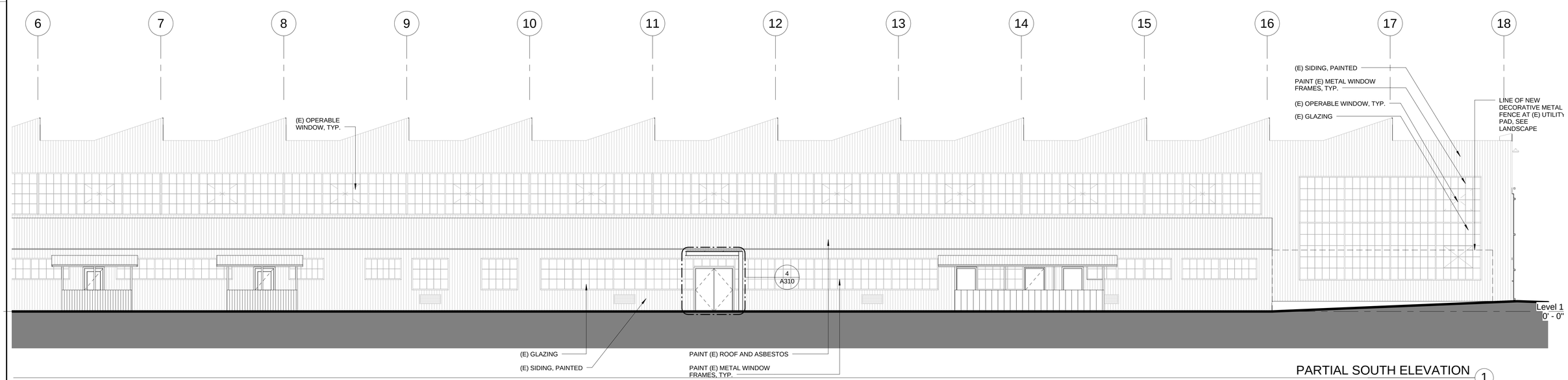

PARTIAL SOUTH ELEVATION 1
1/8" = 1'-0"

3/27/2013 9:00:58 PM

SAN FRANCISCO OAKLAND BAY BRIDGE EAST SPAN SEISMIC SAFETY PROJECT

IERBYS TEMPORARY IMPROVEMENTS - BUILDING

ENLARGED ELEVATIONS

SHEET A301

Quincy Wong — DESIGN OVERSIGHT
03/27/13 — SIGN OFF DATE

	BY	CHECKED
DESIGN	COREY SCHURR	GREGORY BAKER
DETAILS		
QUANTITIES		

PREPARED FOR THE STATE OF CALIFORNIA DEPARTMENT OF TRANSPORTATION

KAREN Y. WANG — PROJECT ENGINEER

BRIDGE NO

POST MILES 2.0

DESIGN DETAIL SHEET (ENGLISH) (REV. 03/14/12)

ORIGINAL SCALE IN INCHES FOR REDUCED PLANS 0 1 2 3

UNIT: 04
PROJECT NUMBER AND PHASE: CONTRACT NO.: 0120F4

DISREGARD PRINTS BEARING EARLIER REVISION DATES

REVISION DATES

SHEET 17 OF 66

C:\Users\jabraham\Documents\IERBYS\56185_Gateway Park - JAbraham - 3-27-13.rvt

DIST	COUNTY	ROUTE	POST MILES TOTAL PROJECT	SHEET No	TOTAL SHEETS
04	ALA	80	2.0	1204w	1204

REGISTERED ARCHITECT — DATE 03/27/13

PLANS APPROVAL DATE

LICENSED ARCHITECT — GREGORY P. BAKER — C-16884 — 10.31.2013 RENEWAL DATE — STATE OF CALIFORNIA

The state of California or its officers or agents shall not be responsible for the accuracy or completeness of scanned copies of this plan sheet.

HNTB CORPORATION
1111 BROADWAY
9TH FLOOR
OAKLAND, CA 94607

HNTB Corporation
Engineers Architects Planners

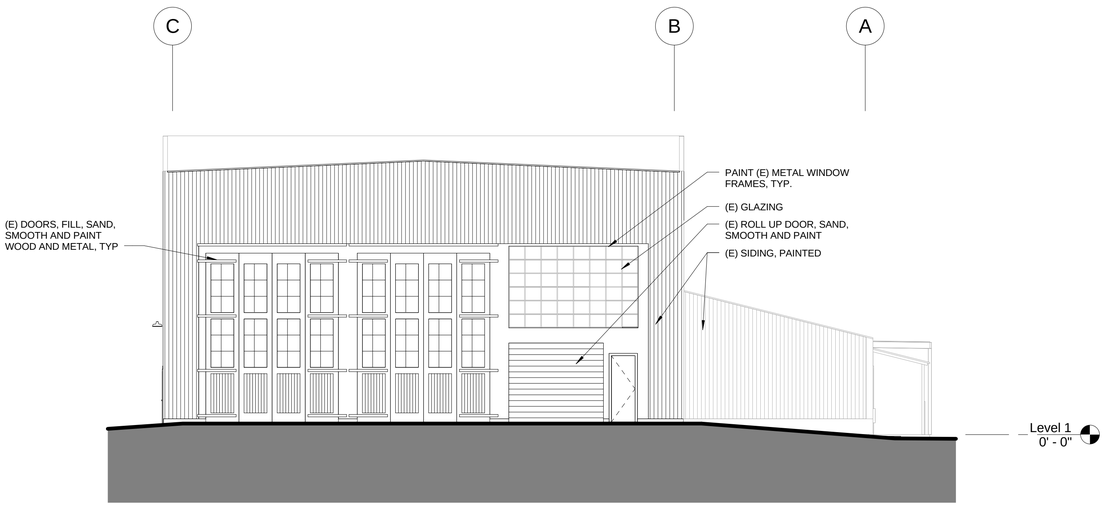

WEST ELEVATION (2)
1/8" = 1'-0"

NOTES:

SCOPE OF EXTERIOR PAINTING TO INCLUDE:
- ALL CORRUGATED SIDING, INCLUDING VERTICAL, SLOPED, AND SIDING AT ROOF AREAS (EP-1, UON)
- ALL WINDOW MULLIONS AND TRIM (M-1)
- ALL (E) LEAD FLASHING TO BE PAINTED (EP-1)
- ALL DOORS AND JAMBS, INCLUDING ROLL-UP DOORS
- ALL MISCELLANEOUS METAL AND HARDWARE

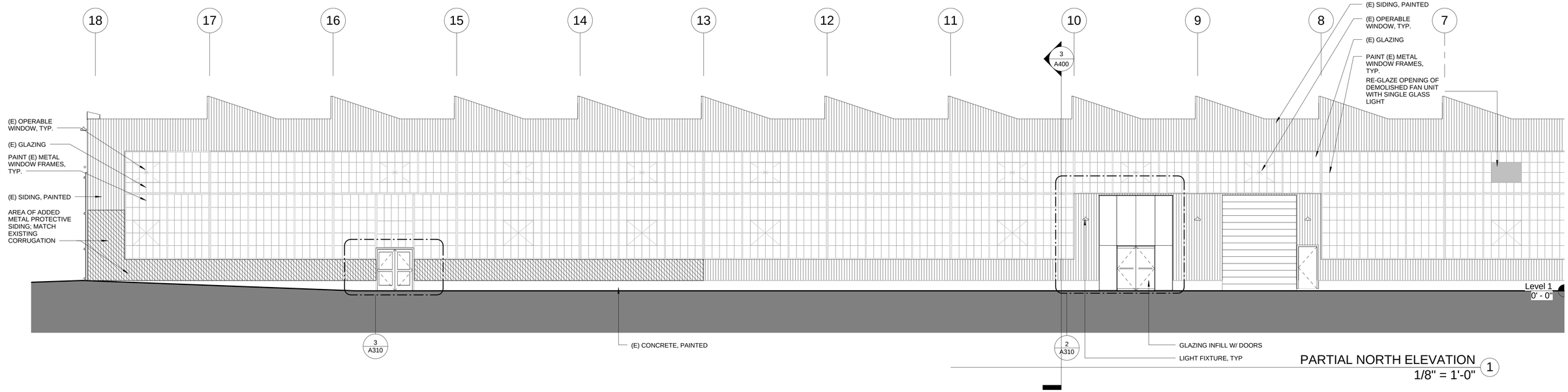

PARTIAL NORTH ELEVATION (1)
1/8" = 1'-0"

3/27/2013 9:01:10 PM

SAN FRANCISCO OAKLAND BAY BRIDGE
EAST SPAN SEISMIC SAFETY PROJECT

Quincy Wong
DESIGN OVERSIGHT

03/27/13
SIGN OFF DATE

	BY	CHECKED
DESIGN	COREY SCHURR	GREGORY BAKER
DETAILS	BY	CHECKED
QUANTITIES	BY	CHECKED

PREPARED FOR THE
STATE OF CALIFORNIA
DEPARTMENT OF TRANSPORTATION

KAREN Y. WANG
PROJECT ENGINEER

BRIDGE NO
POST MILES 2.0

IERBYS TEMPORARY IMPROVEMENTS - BUILDING

ENLARGED ELEVATIONS

SHEET A302

DESIGN DETAIL SHEET (ENGLISH) (REV. 03/14/12)

ORIGINAL SCALE IN INCHES FOR REDUCED PLANS 0 1 2 3

UNIT: 04
PROJECT NUMBER AND PHASE:
CONTRACT NO.: 0120F4

DISREGARD PRINTS BEARING EARLIER REVISION DATES

REVISION DATES

SHEET 18 OF 66

C:\Users\jabraham\Documents\IERBYS\56185_Gateway Park - JAbraham - 3-27-13.rvt

DIST	COUNTY	ROUTE	POST MILES TOTAL PROJECT	SHEET No	TOTAL SHEETS
04	ALA	80	2.0	1204x	1204

REGISTERED ARCHITECT — DATE 03/27/13

PLANS APPROVAL DATE

LICENSED ARCHITECT — GREGORY P. BAKER — C-16884 — 10.31.2013 RENEWAL DATE — STATE OF CALIFORNIA

The state of California or its officers or agents shall not be responsible for the accuracy or completeness of scanned copies of this plan sheet.

HNTB CORPORATION
1111 BROADWAY
9TH FLOOR
OAKLAND, CA 94607

HNTB Corporation
Engineers Architects Planners

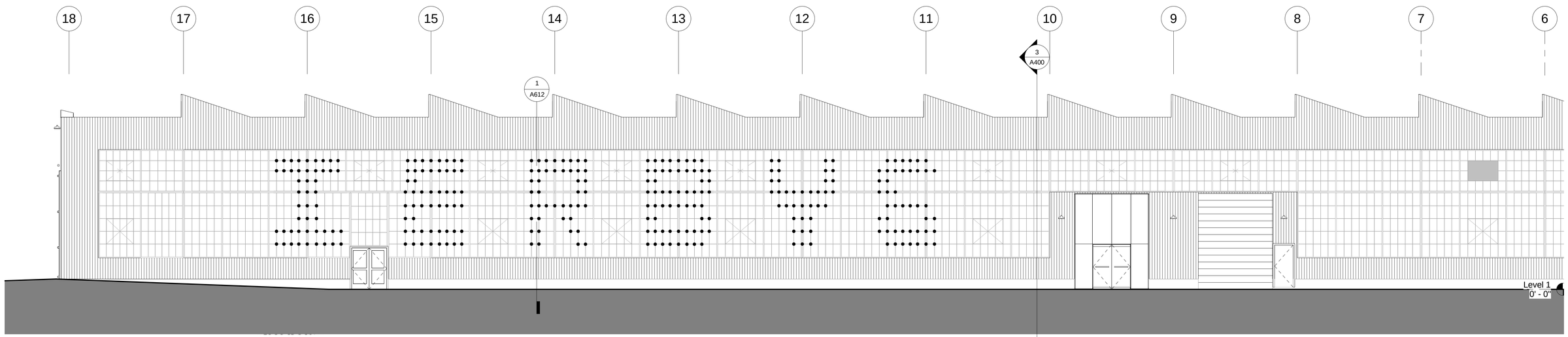

NOTE: THIS SHEET FOR SIGNAGE INFORMATION ONLY; FOR ALL OTHER INFORMATION ON THIS ELEVATION, SEE 1/A302

PARTIAL NORTH ELEVATION - SIGNAGE (1)
1/8" = 1'-0"

Specifications

Wet-Location Listed

Light Sources include TokiLeds and Kinetic TokiLeds

Polycarbonate Sockets with flammability rating UL 94V-0

Flexible Conductors are plated #18 AWG

Sockets are soldered and ultrasonically bonded to cable

Insulation is flexible PVC with flammability rating UL 94 HB

FIXTURE:

3000K LED LAMPS ON VERTICAL 1/16" S.S. AIRCRAFT CABLE.

LIGHTSTRING BY TOKISTAR CUSTOM SPACING WHITE ASSOCIATES LIGHTING
323.661.9495

3/27/2013 9:01:18 PM

SAN FRANCISCO OAKLAND BAY BRIDGE EAST SPAN SEISMIC SAFETY PROJECT

Quincy Wong
DESIGN OVERSIGHT
03/27/13
SIGN OFF DATE

	BY	CHECKED
DESIGN	COREY SCHURR	GREGORY BAKER
DETAILS	BY	CHECKED
QUANTITIES	BY	CHECKED

PREPARED FOR THE
STATE OF CALIFORNIA
DEPARTMENT OF TRANSPORTATION

KAREN Y. WANG
PROJECT ENGINEER

BRIDGE NO
POST MILES 2.0

IERBYS TEMPORARY IMPROVEMENTS - BUILDING

ENLARGED ELEVATIONS - SIGNAGE

SHEET A303

DESIGN DETAIL SHEET (ENGLISH) (REV. 03/14/12)

ORIGINAL SCALE IN INCHES FOR REDUCED PLANS 0 1 2 3

UNIT: 04
PROJECT NUMBER AND PHASE:
CONTRACT NO.: 0120F4

DISREGARD PRINTS BEARING EARLIER REVISION DATES

REVISION DATES ___ ___ ___ ___

SHEET 19 OF 66

C:\Users\jabraham\Documents\IERBYS\56185_Gateway Park - JAbraham - 3-27-13.rvt

DIST	COUNTY	ROUTE	POST MILES TOTAL PROJECT	SHEET No	TOTAL SHEETS
04	ALA	80	2.0	1204y	1204

REGISTERED ARCHITECT — DATE 03/27/13

PLANS APPROVAL DATE

LICENSED ARCHITECT — GREGORY P. BAKER — C-16884 — 10.31.2013 RENEWAL DATE — STATE OF CALIFORNIA

The state of California or its officers or agents shall not be responsible for the accuracy or completeness of scanned copies of this plan sheet.

HNTB CORPORATION
1111 BROADWAY
9TH FLOOR
OAKLAND, CA 94607

HNTB Corporation Engineers Architects Planners

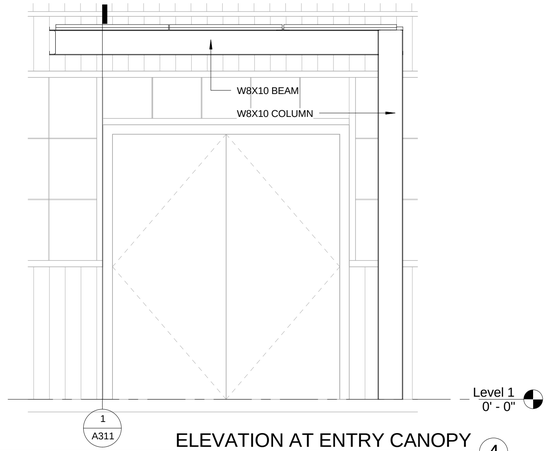

ELEVATION AT ENTRY CANOPY (4)
1/2" = 1'-0"

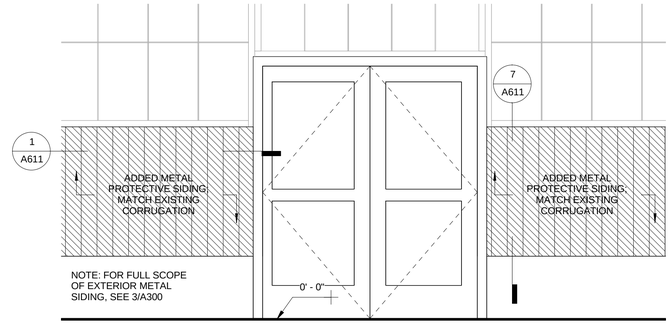

ENLARGED NORTH ELEVATION (3)
1/2" = 1'-0"

NOTES:

SCOPE OF EXTERIOR PAINTING TO INCLUDE:
- ALL CORRUGATED SIDING, INCLUDING VERTICAL, SLOPED, AND SIDING AT ROOF AREAS (EP-1, UON)
- ALL WINDOW MULLIONS AND TRIM (M-1)
- ALL (E) LEAD FLASHING TO BE PAINTED (EP-1)
- ALL DOORS AND JAMBS, INCLUDING ROLL-UP DOORS
- ALL MISCELLANEOUS METAL AND HARDWARE

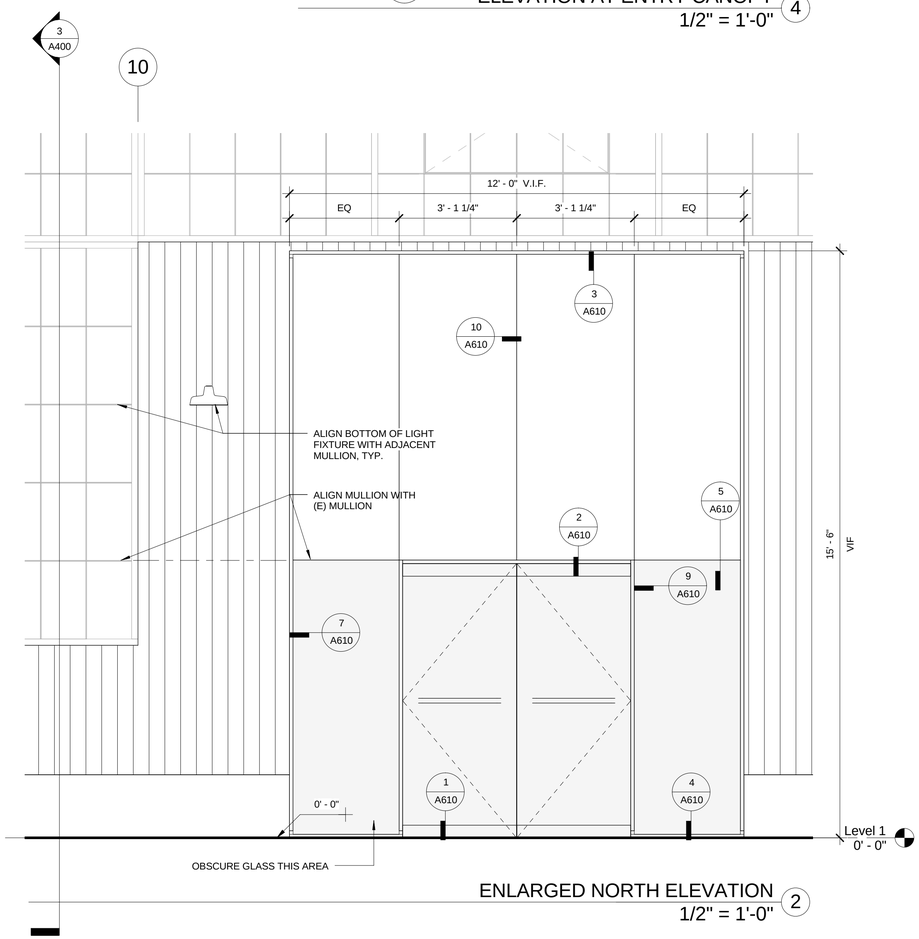

ENLARGED NORTH ELEVATION (2)
1/2" = 1'-0"

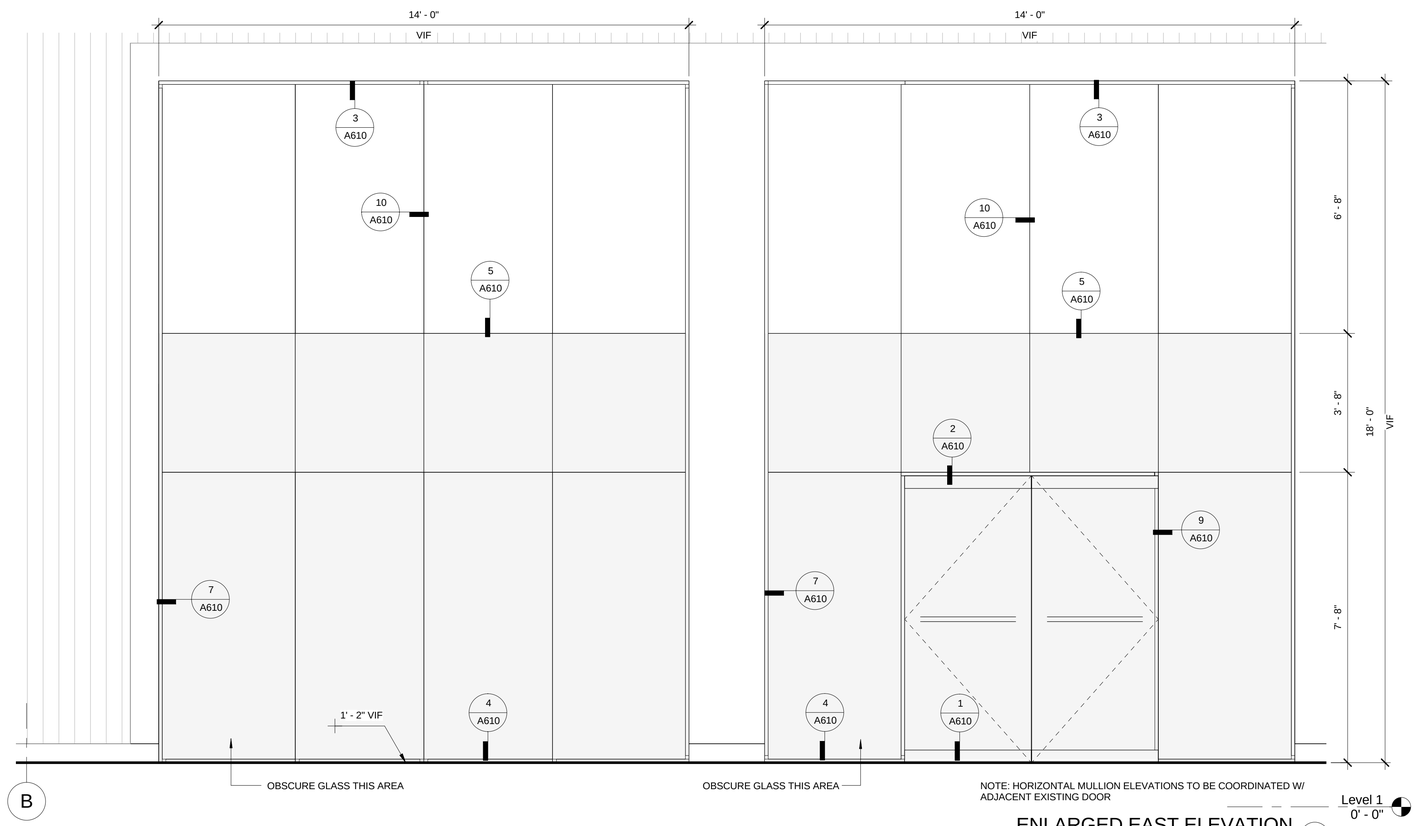

ENLARGED EAST ELEVATION (1)
1/2" = 1'-0"

3/27/2013 9:37:29 PM

SAN FRANCISCO OAKLAND BAY BRIDGE
EAST SPAN SEISMIC SAFETY PROJECT

IERBYS TEMPORARY IMPROVEMENTS - BUILDING

ENLARGED ELEVATIONS

SHEET A310

Quincy Wong
DESIGN OVERSIGHT
03/27/13
SIGN OFF DATE

	BY	CHECKED
DESIGN	COREY SCHURR	GREGORY BAKER
DETAILS		
QUANTITIES		

PREPARED FOR THE STATE OF CALIFORNIA DEPARTMENT OF TRANSPORTATION

KAREN Y. WANG
PROJECT ENGINEER

BRIDGE NO
POST MILES 2.0

DESIGN DETAIL SHEET (ENGLISH) (REV. 03/14/12)

ORIGINAL SCALE IN INCHES FOR REDUCED PLANS 0 1 2 3

UNIT: 04
PROJECT NUMBER AND PHASE:
CONTRACT NO.: 0120F4

DISREGARD PRINTS BEARING EARLIER REVISION DATES

REVISION DATES

SHEET 20 OF 66

C:\Users\jabraham\Documents\IERBYS\56185_Gateway Park - JAbraham - 3-27-13.rvt

DIST	COUNTY	ROUTE	POST MILES TOTAL PROJECT	SHEET No	TOTAL SHEETS
04	ALA	80	2.0	1204z	1204

REGISTERED ARCHITECT — DATE 03/27/13

LICENSED ARCHITECT — GREGORY P. BAKER — C-16884 — 10.31.2013 RENEWAL DATE — STATE OF CALIFORNIA

PLANS APPROVAL DATE

The state of California or its officers or agents shall not be responsible for the accuracy or completeness of scanned copies of this plan sheet.

HNTB CORPORATION
1111 BROADWAY
9TH FLOOR
OAKLAND, CA 94607

HNTB Corporation Engineers Architects Planners

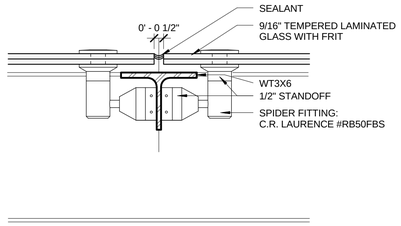

CANOPY CONNECTION AT INTERMEDIATE (9)
3" = 1'-0"

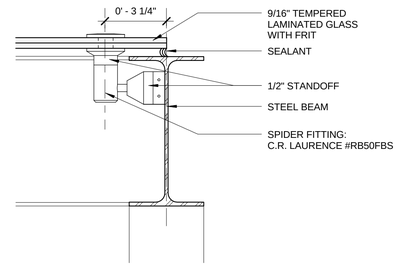

CONNECTION FACING NORTH (6)
3" = 1'-0"

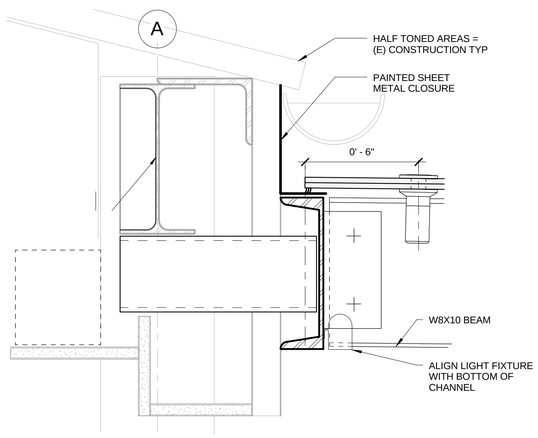

CONNECTION AT EDGE (8)
3" = 1'-0"

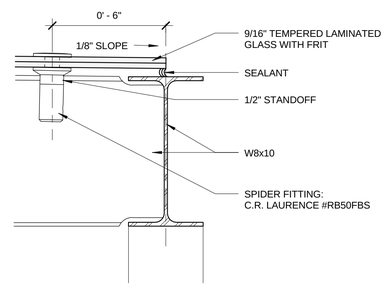

CONNECTION AT EDGE (5)
3" = 1'-0"

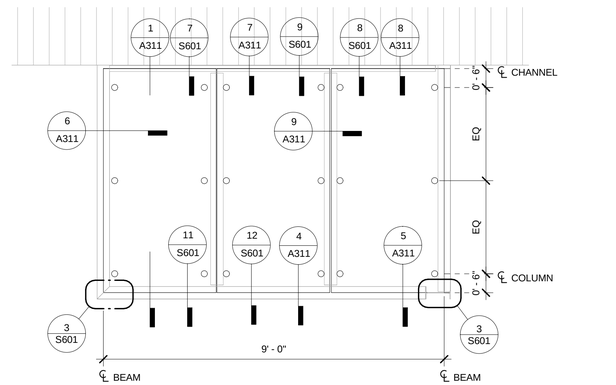

PLAN AT CANOPY (2)
1/2" = 1'-0"

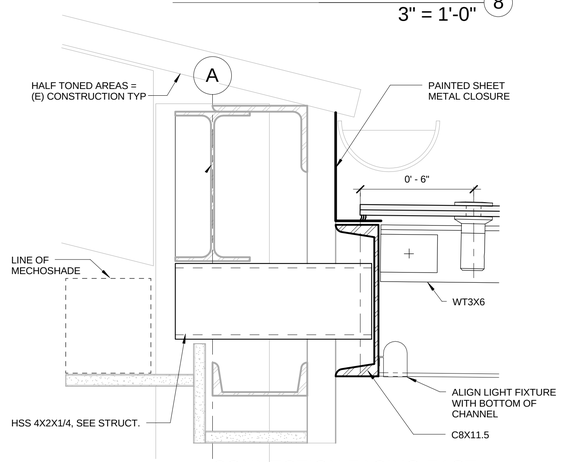

CONNECTION FACING EAST (7)
3" = 1'-0"

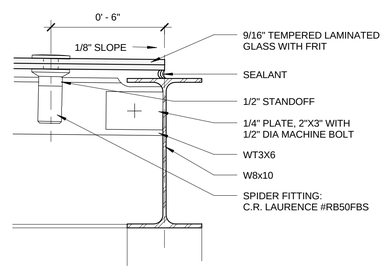

CONNECTION FACING EAST (4)
3" = 1'-0"

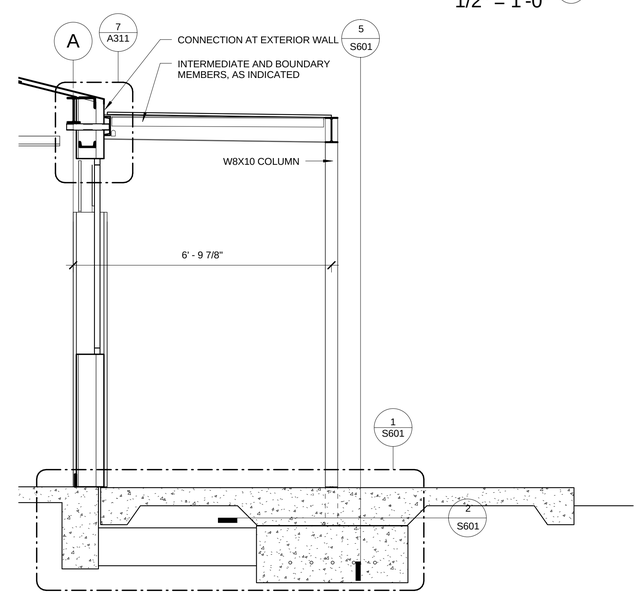

SECTION AT CANOPY FACING EAST (1)
1/2" = 1'-0"

SAN FRANCISCO OAKLAND BAY BRIDGE
EAST SPAN SEISMIC SAFETY PROJECT

IERBYS TEMPORARY IMPROVEMENTS - BUILDING

ENTRY CANOPY

SHEET A311

Quincy Wong — DESIGN OVERSIGHT
03/27/13 — SIGN OFF DATE

	BY	CHECKED
DESIGN	COREY SCHURR	GREGORY BAKER
DETAILS	BY	CHECKED
QUANTITIES	BY	CHECKED

PREPARED FOR THE STATE OF CALIFORNIA DEPARTMENT OF TRANSPORTATION

KAREN Y. WANG — PROJECT ENGINEER

BRIDGE NO
POST MILES 2.0

DESIGN DETAIL SHEET (ENGLISH) (REV. 03/14/12)

ORIGINAL SCALE IN INCHES FOR REDUCED PLANS 0 1 2 3

UNIT: 04
PROJECT NUMBER AND PHASE:
CONTRACT NO.: 0120F4

DISREGARD PRINTS BEARING EARLIER REVISION DATES

REVISION DATES ___ ___ ___ ___

SHEET 21 OF 66

C:\Users\jabraham\Documents\IERBYS\56185_Gateway Park - JAbraham - 3-27-13.rvt

3/27/2013 9:01:30 PM

DIST	COUNTY	ROUTE	POST MILES TOTAL PROJECT	SHEET No	TOTAL SHEETS
04	ALA	80	2.0	1204aa	1204

REGISTERED ARCHITECT — DATE 03/27/13

PLANS APPROVAL DATE

LICENSED ARCHITECT — GREGORY P. BAKER — C-16884 — 10.31.2013 RENEWAL DATE — STATE OF CALIFORNIA

The state of California or its officers or agents shall not be responsible for the accuracy or completeness of scanned copies of this plan sheet.

HNTB CORPORATION
1111 BROADWAY
9TH FLOOR
OAKLAND, CA 94607

HNTB Corporation
Engineers Architects Planners

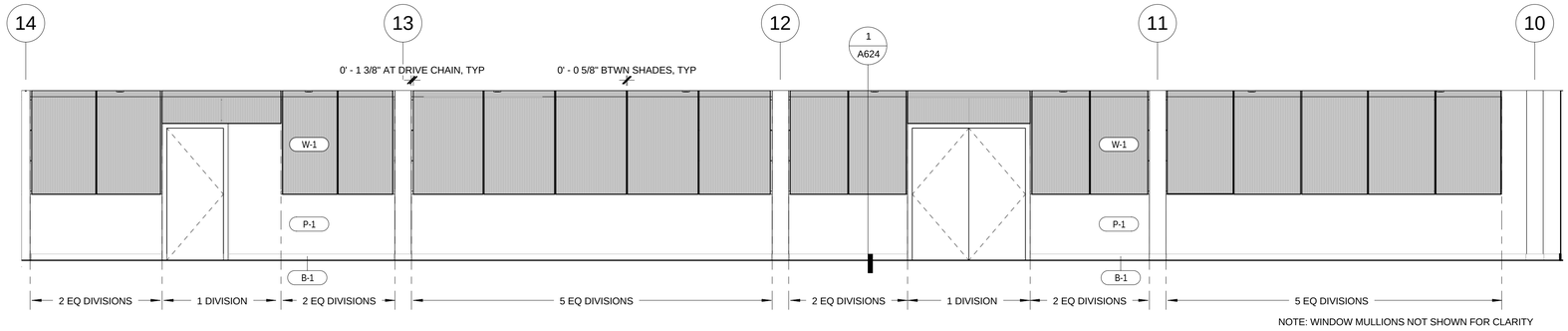

SOUTH LOBBY - WITH WINDOW SHADES (3)
1/4" = 1'-0"

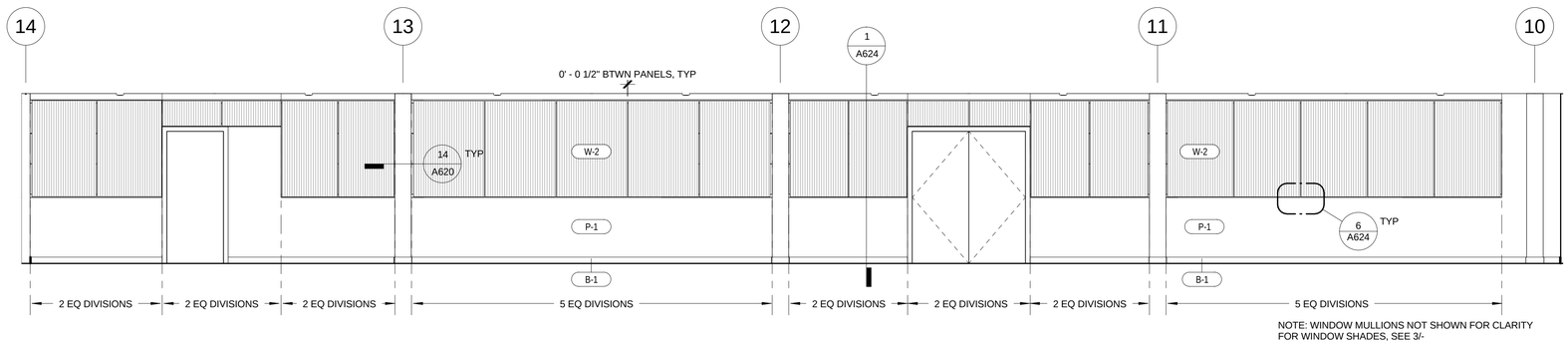

SOUTH LOBBY - WITH ACRYLIC PANELS (2)
1/4" = 1'-0"

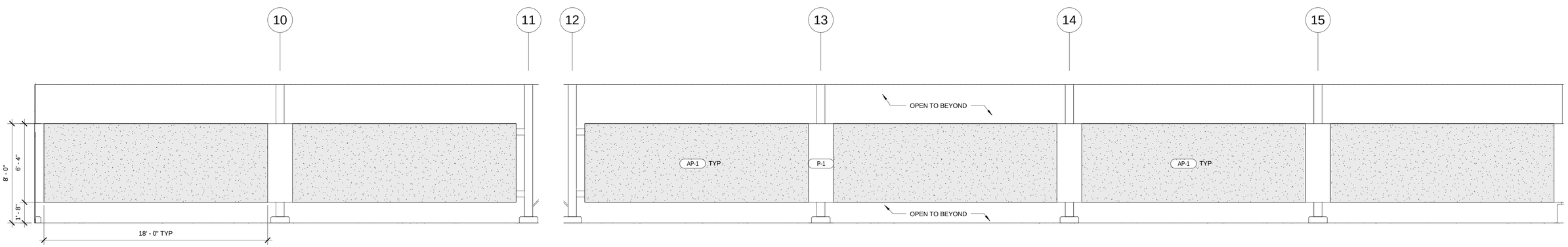

NORTH LOBBY - WITH ACOUSTIC PANELS (1)
1/4" = 1'-0"

NOTES:

SCOPE OF INTERIOR PAINTING TO INCLUDE:
- ALL CORRUGATED SIDING (P-2, U.O.N.)
- ALL WINDOW MULLIONS AND TRIM (P-2, U.O.N.)
- ALL STEEL STRUCTURAL COMPONENTS, INCLUDING COLUMNS, BEAMS, GIRTS, AND MISCELLANEOUS METAL (P-2, U.O.N.)
- ALL SLOPED AND VERTICAL WOOD FRAMING MEMBERS AND DECKING (P-2, U.O.N.)
- ALL WALLS AND PARTITIONS (P-1, U.O.N.)

3/27/2013 9:01:43 PM

SAN FRANCISCO OAKLAND BAY BRIDGE
EAST SPAN SEISMIC SAFETY PROJECT

Quincy Wong
DESIGN OVERSIGHT
03/27/13
SIGN OFF DATE

	BY	CHECKED
DESIGN	COREY SCHURR	GREGORY BAKER
DETAILS	BY	CHECKED
QUANTITIES	BY	CHECKED

PREPARED FOR THE
STATE OF CALIFORNIA
DEPARTMENT OF TRANSPORTATION

KAREN Y. WANG
PROJECT ENGINEER

BRIDGE NO
POST MILES 2.0

IERBYS TEMPORARY IMPROVEMENTS - BUILDING
INTERIOR ELEVATIONS

SHEET A320

DESIGN DETAIL SHEET (ENGLISH) (REV. 03/14/12)

ORIGINAL SCALE IN INCHES FOR REDUCED PLANS 0 1 2 3

UNIT: 04
PROJECT NUMBER AND PHASE:
CONTRACT NO.: 0120F4

DISREGARD PRINTS BEARING EARLIER REVISION DATES

REVISION DATES ___ ___ ___ ___

SHEET 22 OF 66

C:\Users\jabraham\Documents\IERBYS\56185_Gateway Park - JAbraham - 3-27-13.rvt

DIST	COUNTY	ROUTE	POST MILES TOTAL PROJECT	SHEET No	TOTAL SHEETS
04	ALA	80	2.0	1204ab	1204

REGISTERED ARCHITECT — DATE 03/27/13

PLANS APPROVAL DATE

LICENSED ARCHITECT — GREGORY P. BAKER — C-16884 — 10.31.2013 RENEWAL DATE — STATE OF CALIFORNIA

The state of California or its officers or agents shall not be responsible for the accuracy or completeness of scanned copies of this plan sheet.

HNTB CORPORATION
1111 BROADWAY
9TH FLOOR
OAKLAND, CA 94607

HNTB Corporation
Engineers Architects Planners

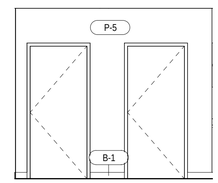

CORRIDOR - WEST (16)
1/4" = 1'-0"

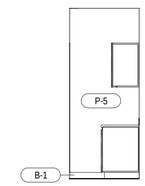

BREAK AREA - WEST (15)
1/4" = 1'-0"

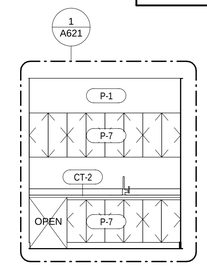

BREAK AREA (14)
1/4" = 1'-0"

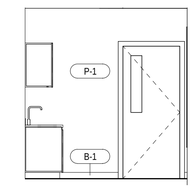

BREAK AREA - EAST (13)
1/4" = 1'-0"

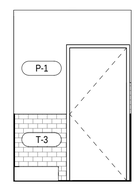

WEST (12)
1/4" = 1'-0"

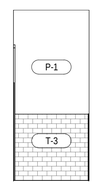

NORTH (11)
1/4" = 1'-0"

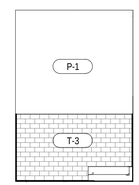

EAST (10)
1/4" = 1'-0"

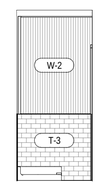

SOUTH (9)
1/4" = 1'-0"

JANITOR'S CLOSET ELEVATION

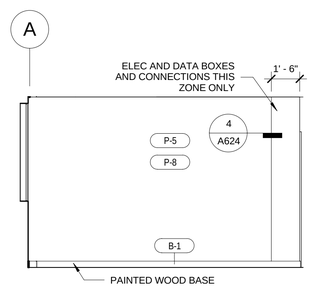

LOBBY - WEST (8)
1/4" = 1'-0"

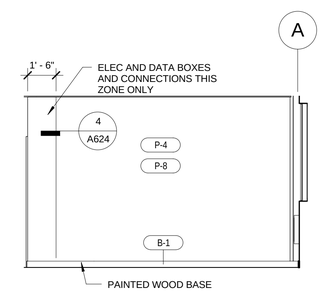

LOBBY - EAST (7)
1/4" = 1'-0"

END OF CORRIDOR - EAST (6)
1/4" = 1'-0"

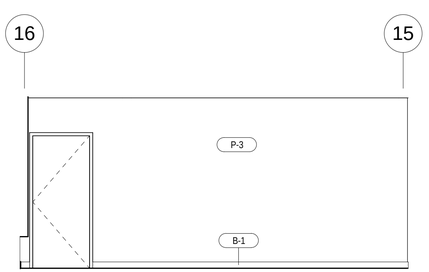

CORRIDOR - EAST (5)
1/4" = 1'-0"

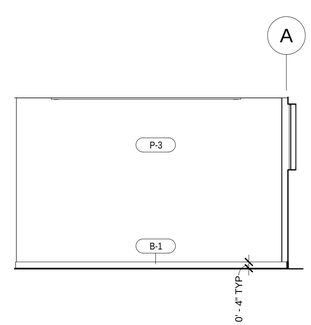

OFFICE - EAST (4)
1/4" = 1'-0"

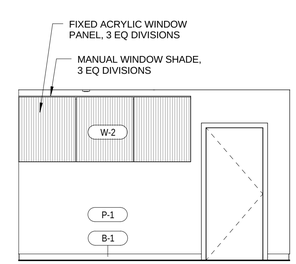

OFFICE - SOUTH (3)
1/4" = 1'-0"

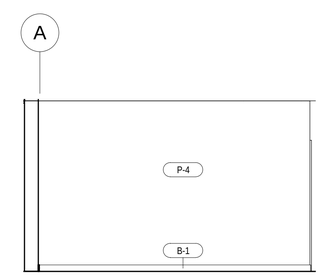

OFFICE - WEST (2)
1/4" = 1'-0"

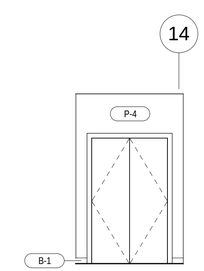

CORRIDOR - TELECOM ELEV (1)
1/4" = 1'-0"

SAN FRANCISCO OAKLAND BAY BRIDGE
EAST SPAN SEISMIC SAFETY PROJECT

IERBYS TEMPORARY IMPROVEMENTS - BUILDING

INTERIOR ELEVATIONS

SHEET A321

Quincy Wong
DESIGN OVERSIGHT
03/27/13
SIGN OFF DATE

	BY	CHECKED
DESIGN	COREY SCHURR	GREGORY BAKER
DETAILS	BY	CHECKED
QUANTITIES	BY	CHECKED

PREPARED FOR THE
STATE OF CALIFORNIA
DEPARTMENT OF TRANSPORTATION

KAREN Y. WANG
PROJECT ENGINEER

BRIDGE NO
POST MILES 2.0

DESIGN DETAIL SHEET (ENGLISH) (REV. 03/14/12)

ORIGINAL SCALE IN INCHES FOR REDUCED PLANS 0 1 2 3

UNIT: 04
PROJECT NUMBER AND PHASE:
CONTRACT NO.: 0120F4

DISREGARD PRINTS BEARING EARLIER REVISION DATES

REVISION DATES

SHEET 23 OF 66

C:\Users\jabraham\Documents\IERBYS\56185_Gateway Park - JAbraham - 3-27-13.rvt

3/27/2013 9:01:53 PM

DIST	COUNTY	ROUTE	POST MILES TOTAL PROJECT	SHEET No	TOTAL SHEETS
04	ALA	80	2.0	1204ac	1204

REGISTERED ARCHITECT — DATE 03/27/13

PLANS APPROVAL DATE

LICENSED ARCHITECT — GREGORY P. BAKER — C-16884 — 10.31.2013 RENEWAL DATE — STATE OF CALIFORNIA

The state of California or its officers or agents shall not be responsible for the accuracy or completeness of scanned copies of this plan sheet.

HNTB CORPORATION
1111 BROADWAY
9TH FLOOR
OAKLAND, CA 94607

HNTB Corporation Engineers Architects Planners

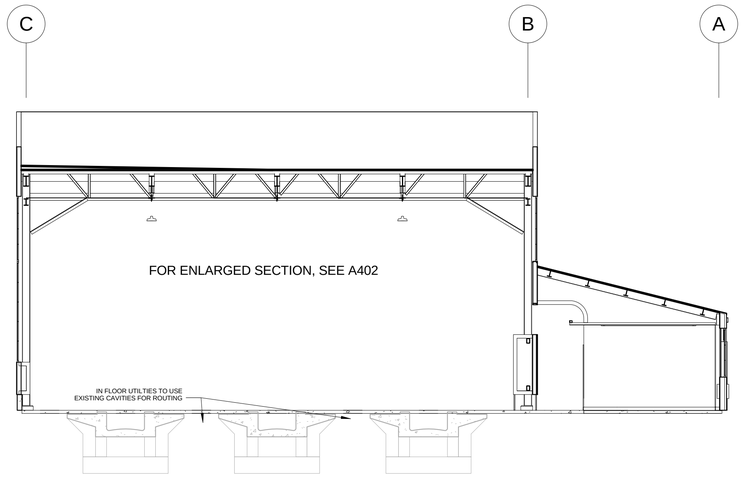

SECTION LOOKING EAST (3)
1/8" = 1'-0"

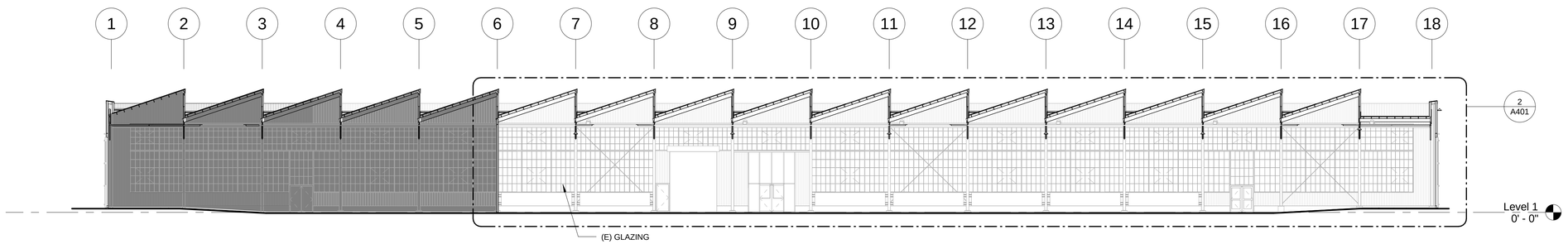

SECTION LOOKING NORTH (2)
1/16" = 1'-0"

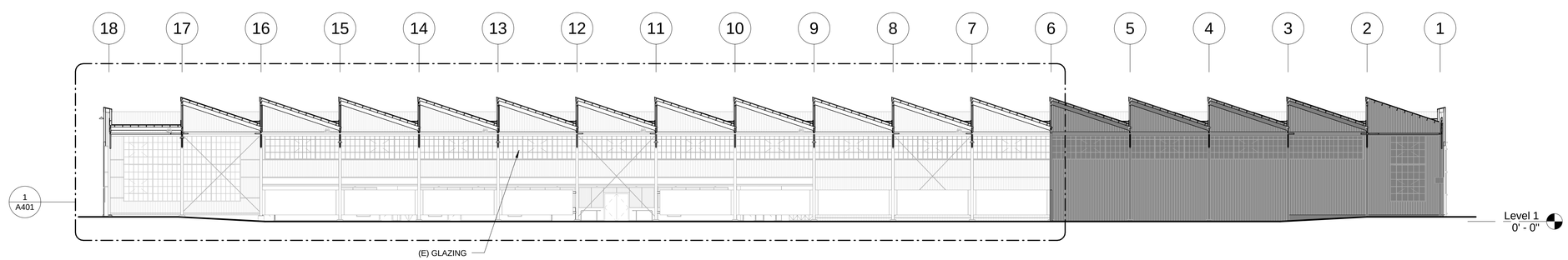

SECTION LOOKING SOUTH (1)
1/16" = 1'-0"

NOTES:

SCOPE OF INTERIOR PAINTING TO INCLUDE:
- ALL CORRUGATED SIDING (P-2, U.O.N.)
- ALL WINDOW MULLIONS AND TRIM (M-1)
- ALL STEEL STRUCTURAL COMPONENTS, INCLUDING COLUMNS, BEAMS, GIRTS, AND MISCELLANEOUS METAL (P-2, U.O.N.)
- ALL SLOPED AND VERTICAL WOOD FRAMING MEMBERS AND DECKING (P-2, U.O.N.)
- ALL WALLS AND PARTITIONS (P-1, U.O.N.)

3/27/2013 9:10:58 PM

SAN FRANCISCO OAKLAND BAY BRIDGE
EAST SPAN SEISMIC SAFETY PROJECT

Quincy Wong
DESIGN OVERSIGHT
03/27/13
SIGN OFF DATE

	BY	CHECKED
DESIGN	COREY SCHURR	GREGORY BAKER
DETAILS		
QUANTITIES		

PREPARED FOR THE
STATE OF CALIFORNIA
DEPARTMENT OF TRANSPORTATION

KAREN Y. WANG
PROJECT ENGINEER

BRIDGE NO
POST MILES 2.0

IERBYS TEMPORARY IMPROVEMENTS - BUILDING

OVERALL SECTIONS

SHEET A400

DESIGN DETAIL SHEET (ENGLISH) (REV. 03/14/12)

ORIGINAL SCALE IN INCHES FOR REDUCED PLANS 0 1 2 3

UNIT: 04
PROJECT NUMBER AND PHASE:
CONTRACT NO.: 0120F4

DISREGARD PRINTS BEARING EARLIER REVISION DATES

REVISION DATES ___ ___ ___ ___

SHEET 24 OF 66

C:\Users\jabraham\Documents\IERBYS\56185_Gateway Park - JAbraham - 3-27-13.rvt

DIST	COUNTY	ROUTE	POST MILES TOTAL PROJECT	SHEET No	TOTAL SHEETS
04	ALA	80	2.0	1204ad	1204

REGISTERED ARCHITECT — DATE 03/27/13

PLANS APPROVAL DATE

LICENSED ARCHITECT — GREGORY P. BAKER — C-16884 — 10.31.2013 RENEWAL DATE — STATE OF CALIFORNIA

The state of California or its officers or agents shall not be responsible for the accuracy or completeness of scanned copies of this plan sheet.

HNTB CORPORATION
1111 BROADWAY
9TH FLOOR
OAKLAND, CA 94607

HNTB Corporation
Engineers Architects Planners

NOTES:

SCOPE OF INTERIOR PAINTING TO INCLUDE:
- ALL CORRUGATED SIDING (P-2, U.O.N.)
- ALL WINDOW MULLIONS AND TRIM (M-1)
- ALL STEEL STRUCTURAL COMPONENTS, INCLUDING COLUMNS, BEAMS, GIRTS, AND MISCELLANEOUS METAL (P-2, U.O.N.)
- ALL SLOPED AND VERTICAL WOOD FRAMING MEMBERS AND DECKING (P-2, U.O.N.)
- ALL WALLS AND PARTITIONS (P-1, U.O.N.)

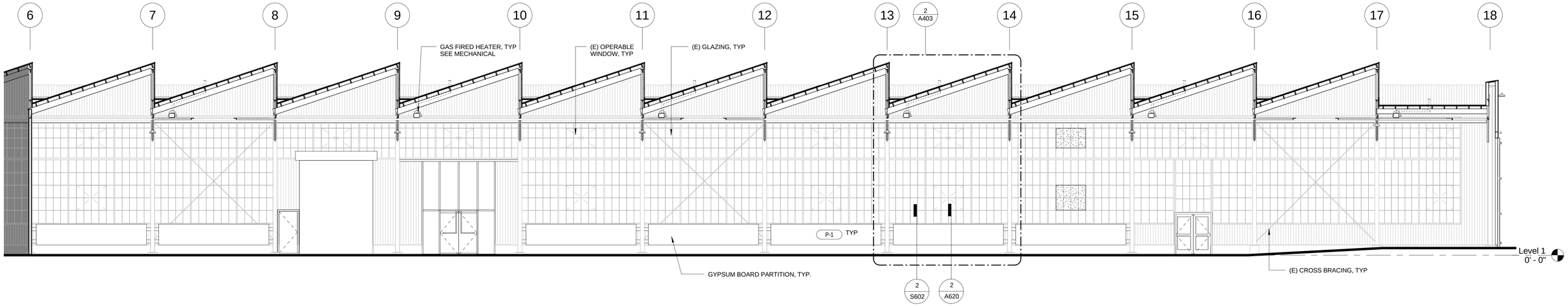

PARTIAL SECTION LOOKING NORTH (2)
1/8" = 1'-0"

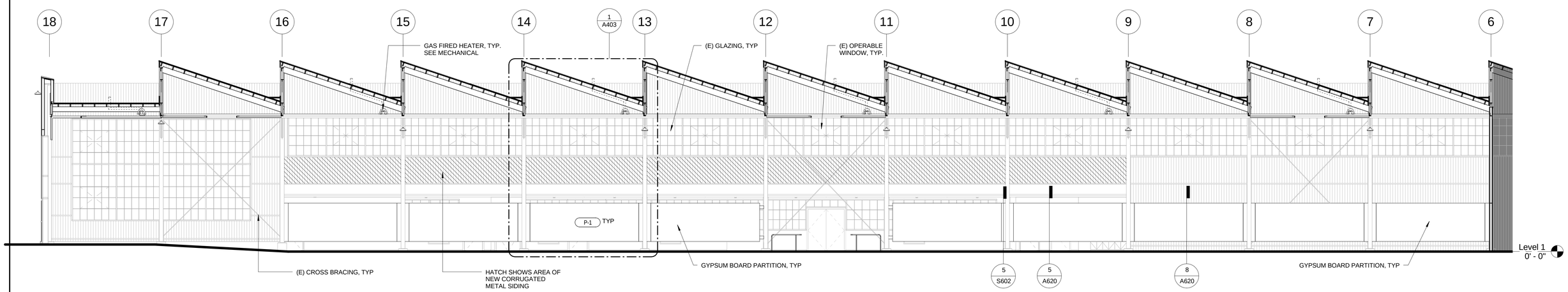

PARTIAL SECTION LOOKING SOUTH (1)
1/8" = 1'-0"

SAN FRANCISCO OAKLAND BAY BRIDGE
EAST SPAN SEISMIC SAFETY PROJECT

IERBYS TEMPORARY IMPROVEMENTS - BUILDING

ENLARGED SECTIONS

SHEET A401

Quincy Wong
DESIGN OVERSIGHT

03/27/13
SIGN OFF DATE

	BY	CHECKED
DESIGN	COREY SCHURR	GREGORY BAKER
DETAILS		
QUANTITIES		

PREPARED FOR THE STATE OF CALIFORNIA DEPARTMENT OF TRANSPORTATION

KAREN Y. WANG
PROJECT ENGINEER

BRIDGE NO
POST MILES 2.0

DESIGN DETAIL SHEET (ENGLISH) (REV. 03/14/12)

ORIGINAL SCALE IN INCHES FOR REDUCED PLANS 0 1 2 3

UNIT: 04
PROJECT NUMBER AND PHASE:
CONTRACT NO.: 0120F4

DISREGARD PRINTS BEARING EARLIER REVISION DATES

REVISION DATES

SHEET 25 OF 66

C:\Users\jabraham\Documents\IERBYS\56185_Gateway Park - JAbraham - 3-27-13.rvt

3/27/2013 9:10:27 PM

DIST	COUNTY	ROUTE	POST MILES TOTAL PROJECT	SHEET No	TOTAL SHEETS
04	ALA	80	2.0	1204ae	1204

REGISTERED ARCHITECT — DATE 03/27/13

PLANS APPROVAL DATE

LICENSED ARCHITECT — GREGORY P. BAKER — C-16884 — 10.31.2013 RENEWAL DATE — STATE OF CALIFORNIA

The state of California or its officers or agents shall not be responsible for the accuracy or completeness of scanned copies of this plan sheet.

HNTB CORPORATION
1111 BROADWAY
9TH FLOOR
OAKLAND, CA 94607

HNTB Corporation
Engineers Architects Planners

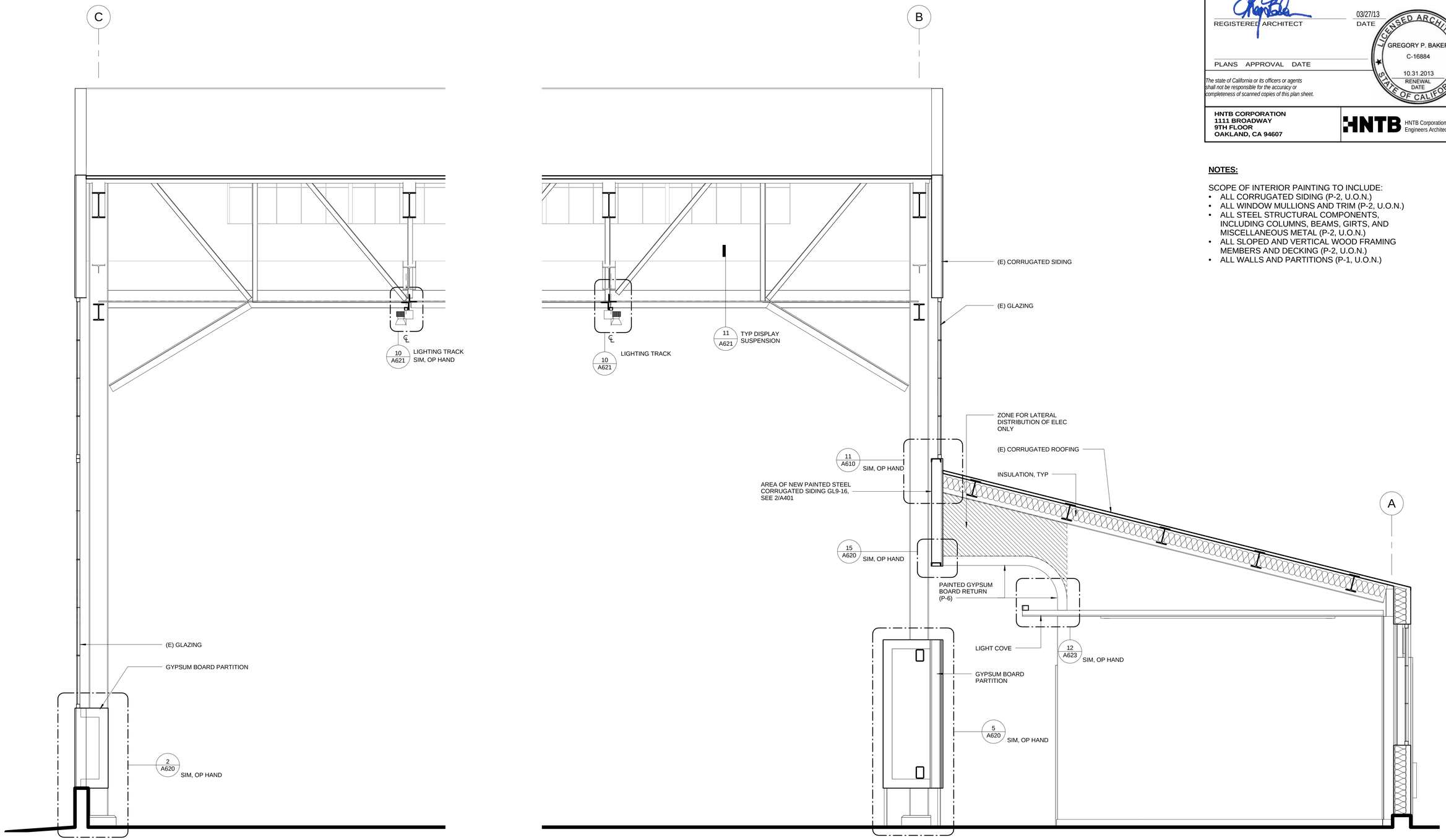

ENLARGED SECTION 1
1/2" = 1'-0"

NOTES:

SCOPE OF INTERIOR PAINTING TO INCLUDE:
- ALL CORRUGATED SIDING (P-2, U.O.N.)
- ALL WINDOW MULLIONS AND TRIM (P-2, U.O.N.)
- ALL STEEL STRUCTURAL COMPONENTS, INCLUDING COLUMNS, BEAMS, GIRTS, AND MISCELLANEOUS METAL (P-2, U.O.N.)
- ALL SLOPED AND VERTICAL WOOD FRAMING MEMBERS AND DECKING (P-2, U.O.N.)
- ALL WALLS AND PARTITIONS (P-1, U.O.N.)

SAN FRANCISCO OAKLAND BAY BRIDGE
EAST SPAN SEISMIC SAFETY PROJECT

IERBYS TEMPORARY IMPROVEMENTS - BUILDING

ENLARGED SECTION LOOKING EAST

SHEET A402

Quincy Wong
DESIGN OVERSIGHT

03/27/13
SIGN OFF DATE

	BY	CHECKED
DESIGN	COREY SCHURR	GREGORY BAKER
DETAILS	BY	CHECKED
QUANTITIES	BY	CHECKED

PREPARED FOR THE
STATE OF CALIFORNIA
DEPARTMENT OF TRANSPORTATION

KAREN Y. WANG
PROJECT ENGINEER

BRIDGE NO
POST MILES 2.0

DESIGN DETAIL SHEET (ENGLISH) (REV. 03/14/12)

ORIGINAL SCALE IN INCHES FOR REDUCED PLANS 0 1 2 3

UNIT: 04
PROJECT NUMBER AND PHASE:
CONTRACT NO.: 0120F4

DISREGARD PRINTS BEARING EARLIER REVISION DATES

REVISION DATES

SHEET 26 OF 66

C:\Users\jabraham\Documents\IERBYS\56185_Gateway Park - JAbraham - 3-27-13.rvt

3/27/2013 9:02:52 PM

DIST	COUNTY	ROUTE	POST MILES TOTAL PROJECT	SHEET No	TOTAL SHEETS
04	ALA	80	2.0	1204af	1204

REGISTERED ARCHITECT — DATE 03/27/13

PLANS APPROVAL DATE

LICENSED ARCHITECT — GREGORY P. BAKER — C-16884 — 10.31.2013 RENEWAL DATE — STATE OF CALIFORNIA

The state of California or its officers or agents shall not be responsible for the accuracy or completeness of scanned copies of this plan sheet.

HNTB CORPORATION
1111 BROADWAY
9TH FLOOR
OAKLAND, CA 94607

HNTB Corporation
Engineers Architects Planners

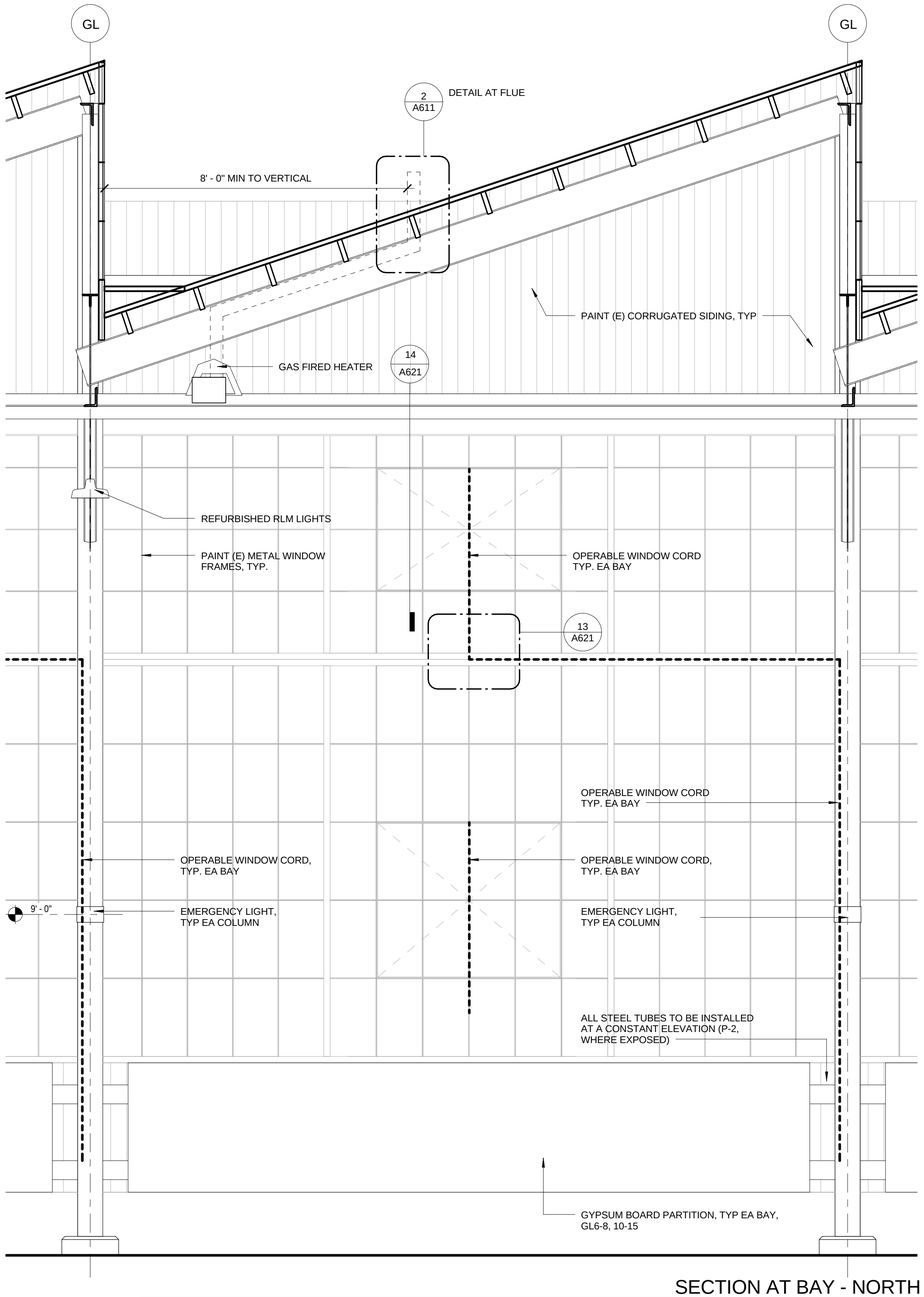

SECTION AT BAY - NORTH (2)
1/2" = 1'-0"

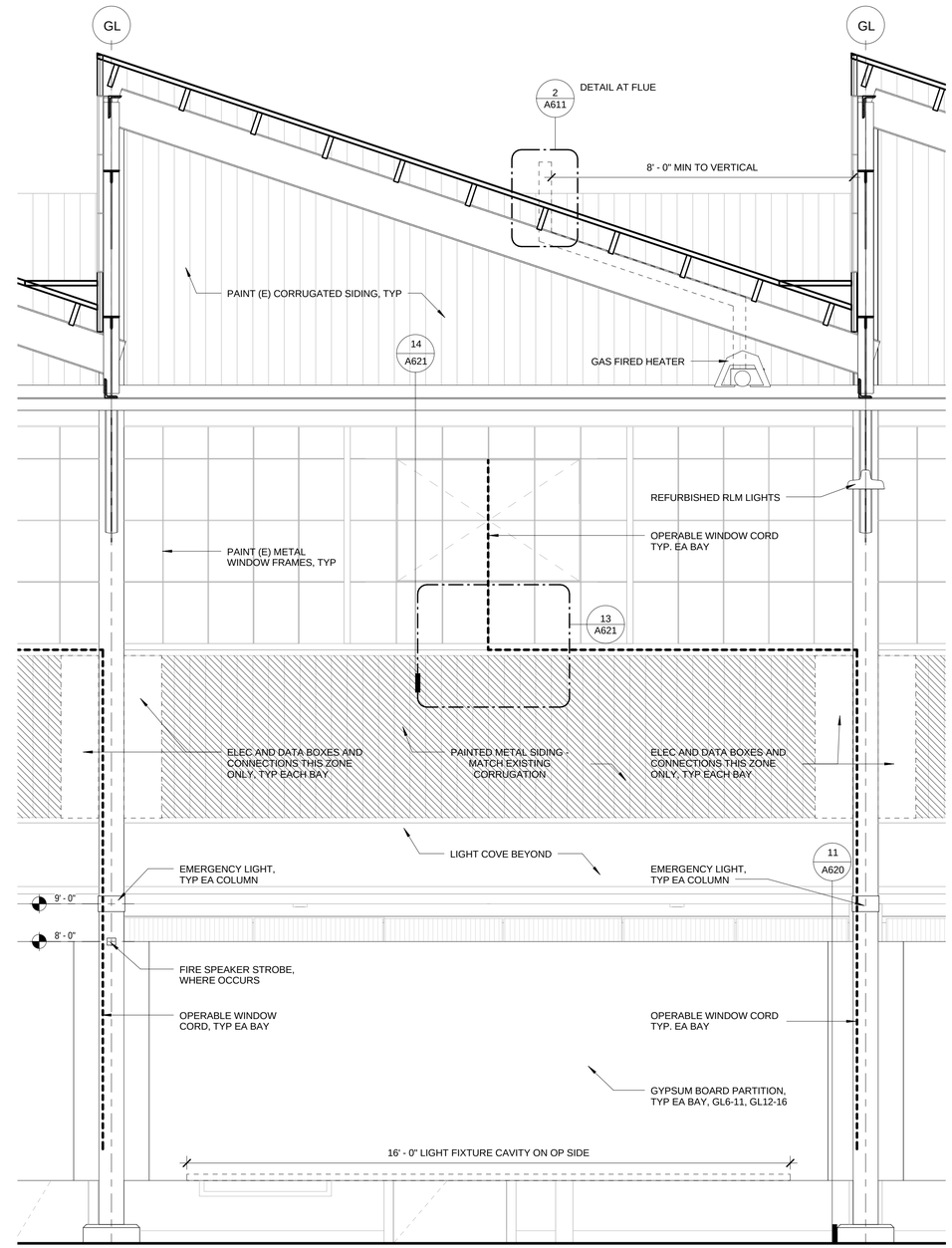

SECTION AT BAY - SOUTH (1)
1/2" = 1'-0"

NOTES:

SCOPE OF INTERIOR PAINTING TO INCLUDE:
- ALL CORRUGATED SIDING (P-2, U.O.N.)
- ALL WINDOW MULLIONS AND TRIM (P-2, U.O.N.)
- ALL STEEL STRUCTURAL COMPONENTS, INCLUDING COLUMNS, BEAMS, GIRTS, AND MISCELLANEOUS METAL (P-2, U.O.N.)
- ALL SLOPED AND VERTICAL WOOD FRAMING MEMBERS AND DECKING (P-2, U.O.N.)
- ALL WALLS AND PARTITIONS (P-1, U.O.N.)

SAN FRANCISCO OAKLAND BAY BRIDGE
EAST SPAN SEISMIC SAFETY PROJECT

IERBYS TEMPORARY IMPROVEMENTS - BUILDING

ENLARGED SECTION AT BAY, TYP

SHEET A403

Quincy Wong
DESIGN OVERSIGHT
03/27/13
SIGN OFF DATE

	BY	CHECKED
DESIGN	COREY SCHURR	GREGORY BAKER
DETAILS	BY	CHECKED
QUANTITIES	BY	CHECKED

PREPARED FOR THE
STATE OF CALIFORNIA
DEPARTMENT OF TRANSPORTATION

KAREN Y. WANG
PROJECT ENGINEER

BRIDGE NO
POST MILES 2.0

DESIGN DETAIL SHEET (ENGLISH) (REV. 03/14/12)

ORIGINAL SCALE IN INCHES FOR REDUCED PLANS 0 1 2 3

UNIT: 04
PROJECT NUMBER AND PHASE:
CONTRACT NO.: 0120F4

DISREGARD PRINTS BEARING EARLIER REVISION DATES

REVISION DATES

SHEET 27 OF 66

C:\Users\jabraham\Documents\IERBYS\56185_Gateway Park - JAbraham - 3-27-13.rvt

3/27/2013 9:02:59 PM

DIST	COUNTY	ROUTE	POST MILES TOTAL PROJECT	SHEET No	TOTAL SHEETS
04	ALA	80	2.0	1204ag	1204

REGISTERED ARCHITECT — DATE 03/27/13

PLANS APPROVAL DATE

LICENSED ARCHITECT — GREGORY P. BAKER — C-16884 — 10.31.2013 RENEWAL DATE — STATE OF CALIFORNIA

The state of California or its officers or agents shall not be responsible for the accuracy or completeness of scanned copies of this plan sheet.

HNTB CORPORATION
1111 BROADWAY
9TH FLOOR
OAKLAND, CA 94607

HNTB Corporation
Engineers Architects Planners

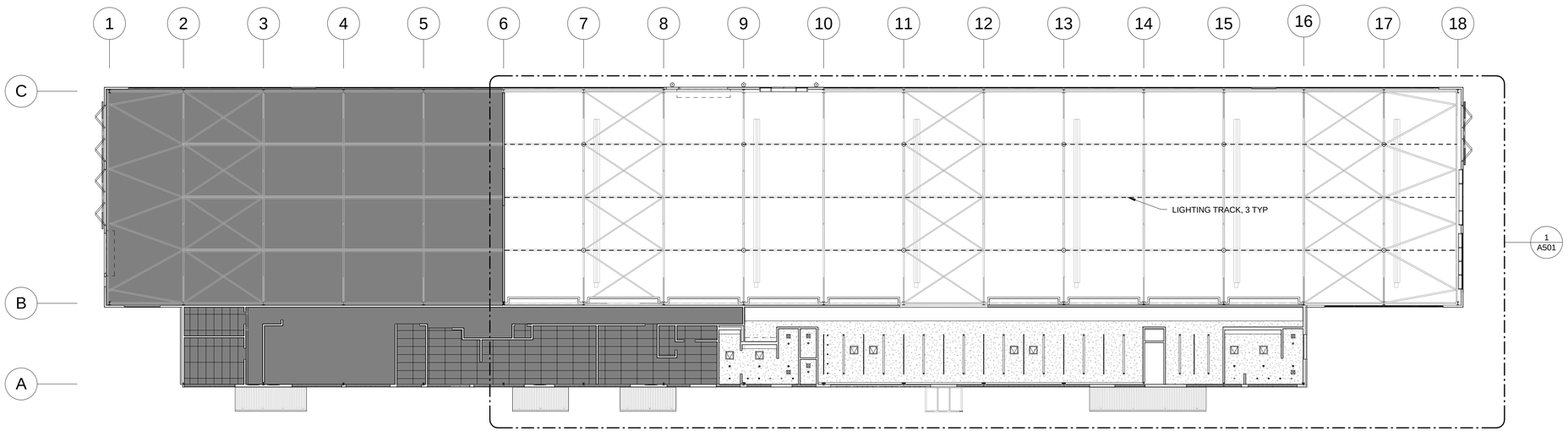

OVERALL RCP (1)
1/16" = 1'-0"

N

3/27/2013 9:03:11 PM

SAN FRANCISCO OAKLAND BAY BRIDGE
EAST SPAN SEISMIC SAFETY PROJECT

IERBYS TEMPORARY IMPROVEMENTS - BUILDING

OVERALL REFLECTED CEILING PLAN

SHEET A500

Quincy Wong
DESIGN OVERSIGHT
03/27/13
SIGN OFF DATE

	BY	CHECKED
DESIGN	COREY SCHURR	GREGORY BAKER
DETAILS	BY	CHECKED
QUANTITIES	BY	CHECKED

PREPARED FOR THE
STATE OF CALIFORNIA
DEPARTMENT OF TRANSPORTATION

KAREN Y. WANG
PROJECT ENGINEER

BRIDGE NO
POST MILES 2.0

DESIGN DETAIL SHEET (ENGLISH) (REV. 03/14/12)

ORIGINAL SCALE IN INCHES FOR REDUCED PLANS 0 1 2 3

UNIT: 04
PROJECT NUMBER AND PHASE: CONTRACT NO.: 0120F4

DISREGARD PRINTS BEARING EARLIER REVISION DATES

REVISION DATES ___ ___ ___ ___

SHEET 28 OF 66

C:\Users\jabraham\Documents\IERBYS\56185_Gateway Park - JAbraham - 3-27-13.rvt

DIST	COUNTY	ROUTE	POST MILES TOTAL PROJECT	SHEET No	TOTAL SHEETS
04	ALA	80	2.0	1204ah	1204

REGISTERED ARCHITECT — DATE 03/27/13

LICENSED ARCHITECT — GREGORY P. BAKER — C-16884 — 10.31.2013 RENEWAL DATE — STATE OF CALIFORNIA

PLANS APPROVAL DATE

The state of California or its officers or agents shall not be responsible for the accuracy or completeness of scanned copies of this plan sheet.

HNTB CORPORATION
1111 BROADWAY
9TH FLOOR
OAKLAND, CA 94607

HNTB Corporation
Engineers Architects Planners

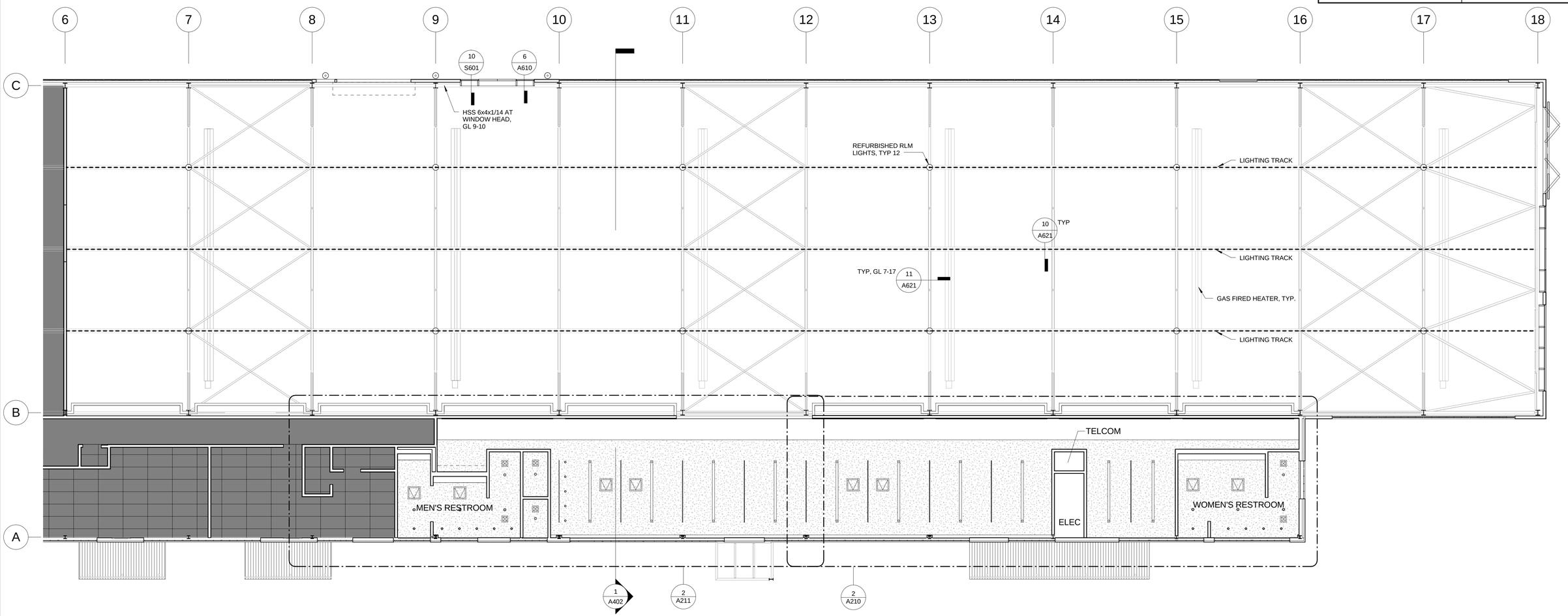

ENLARGED RCP (1)
1/8" = 1'-0"

N

3/27/2013 9:03:32 PM

SAN FRANCISCO OAKLAND BAY BRIDGE
EAST SPAN SEISMIC SAFETY PROJECT

IERBYS TEMPORARY IMPROVEMENTS - BUILDING

ENLARGED REFLECTED CEILING PLAN

SHEET A501

Quincy Wong
DESIGN OVERSIGHT

03/27/13
SIGN OFF DATE

	BY	CHECKED
DESIGN	COREY SCHURR	GREGORY BAKER
DETAILS	BY	CHECKED
QUANTITIES	BY	CHECKED

PREPARED FOR THE
STATE OF CALIFORNIA
DEPARTMENT OF TRANSPORTATION

KAREN Y. WANG
PROJECT ENGINEER

BRIDGE NO

POST MILES 2.0

DESIGN DETAIL SHEET (ENGLISH) (REV. 03/14/12)

ORIGINAL SCALE IN INCHES FOR REDUCED PLANS 0 1 2 3

UNIT: 04
PROJECT NUMBER AND PHASE:
CONTRACT NO.: 0120F4

DISREGARD PRINTS BEARING EARLIER REVISION DATES

REVISION DATES ___ ___ ___ ___

SHEET 29 OF 66

C:\Users\jabraham\Documents\IERBYS\56185_Gateway Park - JAbraham - 3-27-13.rvt

DIST	COUNTY	ROUTE	POST MILES TOTAL PROJECT	SHEET No	TOTAL SHEETS
04	ALA	80	2.0	1204ai	1204

REGISTERED ARCHITECT — DATE 03/27/13

PLANS APPROVAL DATE

LICENSED ARCHITECT — GREGORY P. BAKER — C-16884 — 10.31.2013 RENEWAL DATE — STATE OF CALIFORNIA

The state of California or its officers or agents shall not be responsible for the accuracy or completeness of scanned copies of this plan sheet.

HNTB CORPORATION
1111 BROADWAY
9TH FLOOR
OAKLAND, CA 94607

HNTB Corporation
Engineers Architects Planners

FINISH SCHEDULE

ID	NAME	SPEC	MANUFACTURER	PRODUCT	COLOR / FINISH
FLOOR					
F-1	POLISHED CONCRETE	033524	-	-	-
F-2	CARPET TILE	096813	INTERFACE	INTERFACE FLOR	COLOR 1: 603054 GREY COLOR 2: 609008 GREY COLOR 3: 603059 ANTHRACITE
F-3	FLOOR TILE	093000	SPEC CERAMICS, INC	EMOTIONS	URBAN GREY
F-4	SEALED CONCRETE	033500	-	-	-
EXTERIOR PAINT					
EP-1	EXTERIOR WHITE	099000	MATCH ARCHITECT SAMPLE	-	-
EP-2	EXTERIOR SILVER	099000	MATCH ARCHITECT SAMPLE	-	-
EP-3	EXTERIOR YELLOW	099000	MATCH ARCHITECT SAMPLE	-	-
MULLION FINISH					
M-1	MULLION COLOR	084413	PPG	DURANAR	SUNLIGHT SILVER UC106681F
INTERIOR PAINT					
P-1	INTERIOR WHITE	099000	MATCH ARCHITECT SAMPLE	-	ICICLE
P-2	INTERIOR SILVER	099000	MATCH ARCHITECT SAMPLE	-	-
P-3	(INTERIOR "POP")	099000	BENJAMIN MOORE	-	MATCH TILE T-2
P-4	(INTERIOR "POP")	099000	BENJAMIN MOORE	-	SNOW CONE GREEN 2026-30
P-5	(INTERIOR "POP")	099000	BENJAMIN MOORE	-	MATCH TILE T-1
P-6	(INTERIOR COVE)	099000	BENJAMIN MOORE	-	BIG COUNTRY BLUE 2066-30
P-7	(CASEWORK PAINT)	099000	MATCH ARCHITECT SAMPLE	-	-
P-8	DRY ERASE COATING	099000	GLIDDEN PRO	IDEA PAINT	CLEAR
ACOUSTIC PANEL					
AP-1	ACOUSTIC PANEL	XXXXXX	DECOUSTICS	-	CARNEGIE XOREL STRIE WHITE
FLOOR BASE					
B-1	4" PAINTED WOOD BASE	062000	PAINTED TO MATCH ADJACENT WALL	-	-
WALL TILE					
T-1	MEN'S RESTROOM TILE	093000	DALTILE	SEMI-GLOSS (6"X3")	SUNFLOWER DH50
T-2	WOMEN'S RESTROOM TILE	093000	DALTILE	SEMI-GLOSS (6"X3")	ORANGE BURST Q097
T-3	JANITOR TILE - WHITE	093000	DALTILE	SEMI-GLOSS (6"X3")	WHITE K101
COUNTERTOPS					
CT-1	RESTROOM - GREY	123664	COSENTINO	SILESTONE	SILVER NUBE
CT-2	BREAK AREA - WHITE	123664	DUPONT	CORIAN	GLACIER WHITE
WINDOW TREATMENT					
W-1	MECHO SHADES	122413	MECHOSHADE SYSTEMS	EUROTWILL 6200 SERIES	2% OPEN
W-2	ACRYLIC PANEL	068213	3FORM	DUO	CRYSTAL

TOILET ACCESSORY SCHEDULE

ID	NAME	MANUFACTURER	PRODUCT	NOTES
A-1	RECESSED SEAT-COVER, SANITARY NAPKIN, AND TOILET TISSUE DISPENSER	BOBRICK	B-3574	
A-2	PARTITION MOUNTED SEAT-COVER, SANITARY NAPKIN, AND TOILET TISSUE DISPENSER	BOBRICK	B-357	
A-3	RECESSED SEAT-COVER AND TOILET TISSUE DISPENSER	BOBRICK	B-3474	
A-4	STAINLESS STEEL GRAB BAR	BOBRICK	B-6806	SATIN FINISH
A-5	CLOTHES HOOK	BOBRICK	B-233	SATIN FINISH
A-6	LAVATORY MOUNTED SOAP DISPENSER	BOBRICK	B-8226	

FOR SPECIFICATIONS, SEE SECTION 102813

Door Schedule (Existing)

Room Name	Door Number	Type	Hardware	Door Width	Door Height	Door Thickness	Door Material	Frame Material	Interior/Exterior	Comments
STORAGE	08B	F	04	N/A	N/A	N/A	METAL		EXT	(E) TO REMAIN/PAINT/NOTE 7
STORAGE	09B	A	09	N/A	N/A	N/A	METAL		INT	(E) TO REMAIN/PAINT
STORAGE	15A	G	11	N/A	N/A	N/A	WOOD/GLASS		EXT	NOTE 1, 3, 6
STORAGE	18A	E	02	N/A	N/A	N/A	WOOD		EXT	NOTE 1, DOOR TO REMAIN FIXED

Door Schedule

Room Name	Door Number	Type	Hardware	Door Width	Door Height	Door Thickness	Door Material	Frame Material	Interior/Exterior	Comments
STORAGE	08A	B	05	3' - 0"	6' - 10"	0' - 1 3/4"	METAL		EXT	REPLACE WITH SOLID PANEL
STORAGE	09A	D	01	6' - 0 1/4"	7' - 2 7/8"	0' - 0 3/4"	GLASS	AL	EXT	PANIC HARDWARE
MEN'S RESTROOM	09C	B	10	3' - 0"	7' - 0"	0' - 1 3/4"	METAL	METAL	INT	THRESHOLD - SEE 1/A624
STORAGE	09D	B	06	3' - 0"	7' - 0"	0' - 1 3/4"	METAL		INT	
JANITOR	09E	B	06	3' - 0"	7' - 0"	0' - 1 3/4"	METAL			
LOW BAY	11A	C	03	6' - 0"	7' - 0"	0' - 1 3/4"	METAL	METAL	EXT	PANIC HARDWARE/NOTE 2
LOW BAY	13A	B	05	3' - 0"	7' - 0"	0' - 1 3/4"	METAL		EXT	NOTE 4
TELCOM	14A	C	12	4' - 0"	6' - 8"	0' - 1 3/4"	METAL		INT	
ELEC	14B	B	08	3' - 0"	7' - 0"	0' - 1 3/4"	METAL		EXT	NOTE 5/NOTE 7
LOW BAY	14C	B	05	3' - 0"	7' - 0"	0' - 1 3/4"	METAL		EXT	NOTE 4
WOMEN'S RESTROOM	15B	B	10	3' - 0"	7' - 0"	0' - 1 3/4"	METAL	METAL	INT	THRESHOLD - SEE 1/A624
STORAGE	18B	D	01	6' - 8 3/8"	7' - 6 7/8"	0' - 0 3/4"	GLASS	AL	EXT	PANIC HARDWARE

NOTES:

1. PATCH, SAND SMOOTH, AND PAINT EXISTING WOOD DOORS, FRAMES, AND EXISTING METAL HARDWARE.
2. REMOVE PAINT OR REPLACE PANES WHERE PAINTED WINDOWS OCCUR.
3. RESTORE DOOR TO ORIGINAL CONDITION; REPLACE (E) WOOD PANEL WITH GLASS AS INDICATED.
4. DOOR TO REMAIN PERMANENTLY LOCKED/DEADBOLT ONLY.
5. PATCH, SAND SMOOTH AND PAINT (E) DOOR FRAME.
6. ADD MATERIAL AS NEEDED TO INFILL FRAME TO MATCH EXISTING DOOR SIZE. PATCH AND PAINT TO MATCH.
7. MAXIMUM 1/2" OFFSET AT EACH SIDE OF THRESHOLD, TYP.
8. ALL DOOR LEVER HANDLES TO BE INSTALLED AT 36" A.F.F.

* ALL DOORS AND FRAMES NON-RATED.

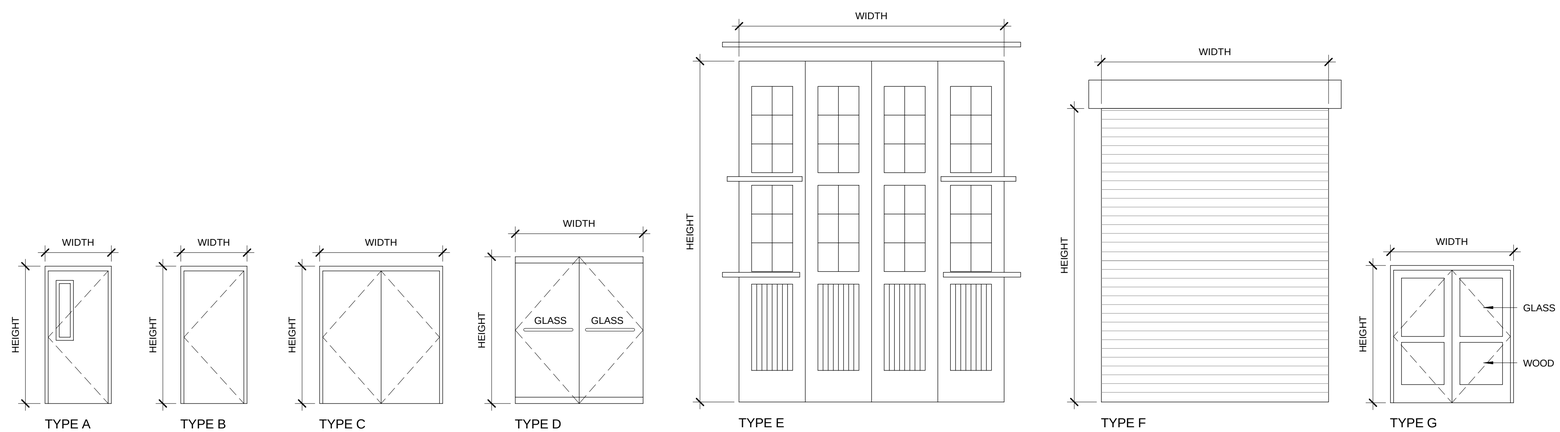

DOOR TYPES

SAN FRANCISCO OAKLAND BAY BRIDGE
EAST SPAN SEISMIC SAFETY PROJECT

IERBYS TEMPORARY IMPROVEMENTS - BUILDING

SCHEDULES

SHEET A600

Quincy Wong — DESIGN OVERSIGHT
03/27/13 — SIGN OFF DATE

	BY	CHECKED
DESIGN	COREY SCHURR	GREGORY BAKER
DETAILS	BY	CHECKED
QUANTITIES	BY	CHECKED

PREPARED FOR THE STATE OF CALIFORNIA DEPARTMENT OF TRANSPORTATION

KAREN Y. WANG — PROJECT ENGINEER

BRIDGE NO

POST MILES 2.0

DESIGN DETAIL SHEET (ENGLISH) (REV. 03/14/12)

ORIGINAL SCALE IN INCHES FOR REDUCED PLANS 0 1 2 3

UNIT: 04
PROJECT NUMBER AND PHASE: CONTRACT NO.: 0120F4

DISREGARD PRINTS BEARING EARLIER REVISION DATES

REVISION DATES ___ ___ ___ ___

SHEET 30 OF 66

C:\Users\jabraham\Documents\IERBYS\56185_Gateway Park - JAbraham - 3-27-13.rvt

3/27/2013 9:03:39 PM

DIST	COUNTY	ROUTE	POST MILES TOTAL PROJECT	SHEET No	TOTAL SHEETS
04	ALA	80	2.0	1204aj	1204

REGISTERED ARCHITECT — DATE 03/27/13

PLANS APPROVAL DATE

LICENSED ARCHITECT — GREGORY P. BAKER — C-16884 — 10.31.2013 RENEWAL DATE — STATE OF CALIFORNIA

The state of California or its officers or agents shall not be responsible for the accuracy or completeness of scanned copies of this plan sheet.

HNTB CORPORATION
1111 BROADWAY
9TH FLOOR
OAKLAND, CA 94607

HNTB Corporation
Engineers Architects Planners

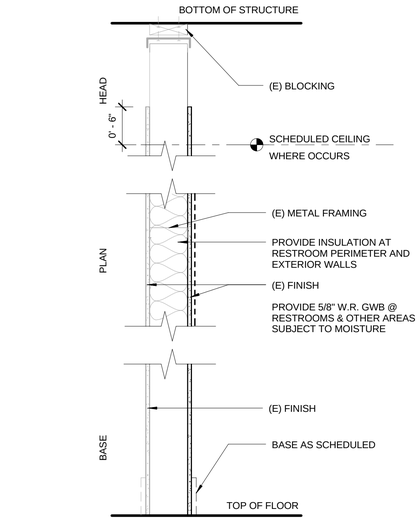

A3.0 1 LAYER OF 5/8" GWB ON (E) WALL FRAMING - NON-RATED

TYPE A3

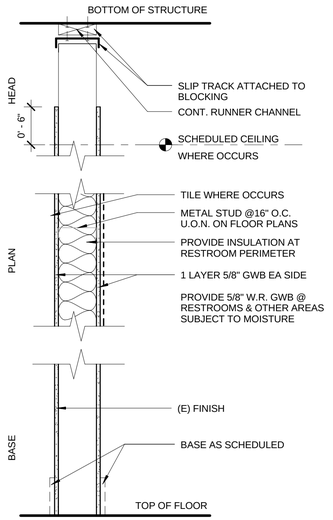

A2.0 4" STUD PARTITION WITH GWB BOTH SIDES - NON-RATED

A2.1 6" STUD PARTITION WITH GWB BOTH SIDES - NON-RATED

A2.2 6" STUD PARTITION WITH GWB BOTH SIDES W/ INSULATION

TYPE A2

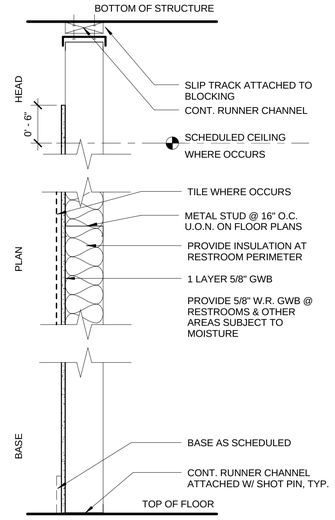

A1.0 2 1/2" STUD PARTITION WITH GWB ONE SIDE - NON-RATED

A1.1 4" STUD PARTITION WITH GWB ONE SIDE - NON-RATED

A1.2 6" STUD PARTITION WITH GWB ONE SIDE - NON-RATED

TYPE A1

3/27/2013 9:03:44 PM

SAN FRANCISCO OAKLAND BAY BRIDGE
EAST SPAN SEISMIC SAFETY PROJECT

Quincy Wong
DESIGN OVERSIGHT

03/27/13
SIGN OFF DATE

	BY	CHECKED
DESIGN	COREY SCHURR	GREGORY BAKER
DETAILS		
QUANTITIES		

PREPARED FOR THE
STATE OF CALIFORNIA
DEPARTMENT OF TRANSPORTATION

KAREN Y. WANG
PROJECT ENGINEER

BRIDGE NO
POST MILES 2.0

IERBYS TEMPORARY IMPROVEMENTS - BUILDING

WALL TYPES

SHEET A601

DESIGN DETAIL SHEET (ENGLISH) (REV. 03/14/12)

ORIGINAL SCALE IN INCHES FOR REDUCED PLANS 0 1 2 3

UNIT: 04
PROJECT NUMBER AND PHASE: CONTRACT NO.: 0120F4

DISREGARD PRINTS BEARING EARLIER REVISION DATES

REVISION DATES ___ ___ ___ ___

SHEET 31 OF 66

C:\Users\jabraham\Documents\IERBYS\56185_Gateway Park - JAbraham - 3-27-13.rvt

DIST	COUNTY	ROUTE	POST MILES TOTAL PROJECT	SHEET No	TOTAL SHEETS
04	ALA	80	2.0	1204ak	1204

REGISTERED ARCHITECT 03/27/13 DATE

LICENSED ARCHITECT GREGORY P. BAKER C-16884 10.31.2013 RENEWAL DATE STATE OF CALIFORNIA

PLANS APPROVAL DATE

The state of California or its officers or agents shall not be responsible for the accuracy or completeness of scanned copies of this plan sheet.

HNTB CORPORATION
1111 BROADWAY
9TH FLOOR
OAKLAND, CA 94607

HNTB Corporation Engineers Architects Planners

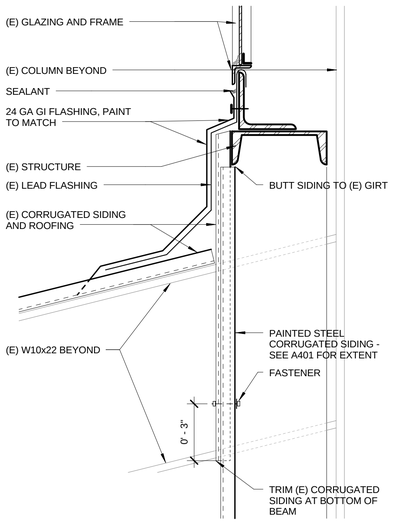

DETAIL AT WINDOW SILL (11)
3" = 1'-0"

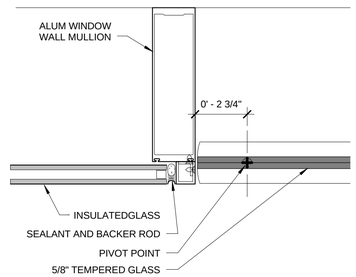

INFILL GLAZING AT DOOR JAMB (9)
3" = 1'-0"

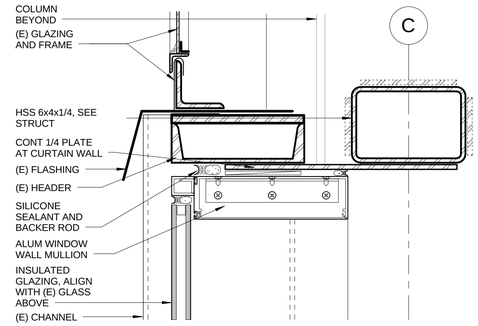

NORTH INFILL GLAZING AT HEAD (6)
3" = 1'-0"

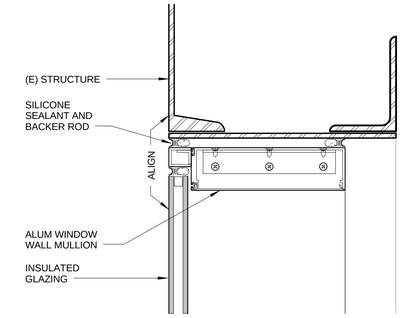

EAST INFILL GLAZING AT HEAD (3)
3" = 1'-0"

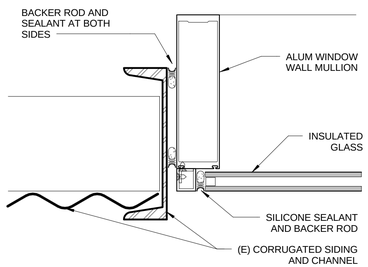

NORTH INFILL GLAZING AT JAMB (8)
3" = 1'-0"

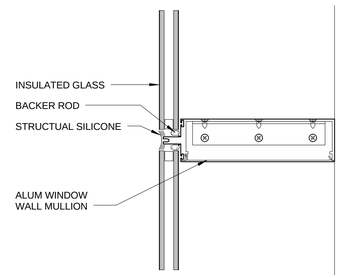

INFILL GLAZING AT HORIZONTAL MULLION (5)
3" = 1'-0"

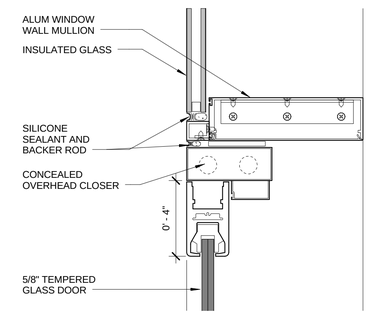

DOOR HEAD (2)
3" = 1'-0"

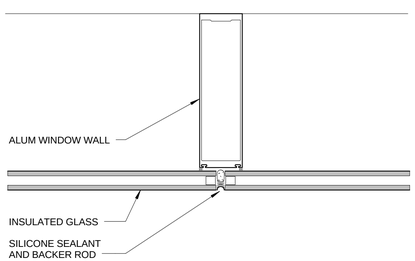

INFILL GLAZING AT VERTICAL MULLION (10)
3" = 1'-0"

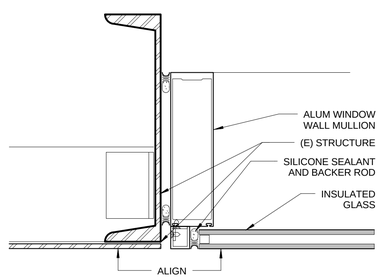

EAST INFILL GLAZING AT JAMB (7)
3" = 1'-0"

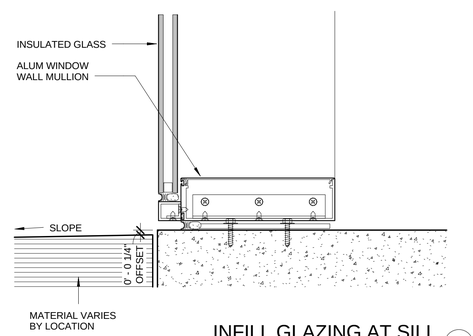

INFILL GLAZING AT SILL (4)
3" = 1'-0"

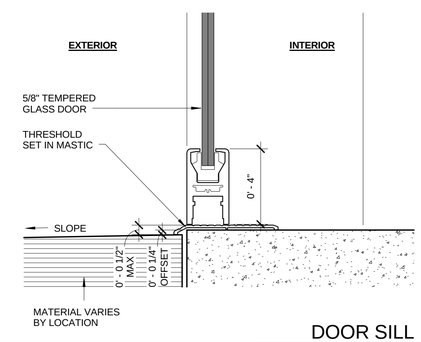

DOOR SILL (1)
3" = 1'-0"

SAN FRANCISCO OAKLAND BAY BRIDGE
EAST SPAN SEISMIC SAFETY PROJECT

Quincy Wong
DESIGN OVERSIGHT
03/27/13
SIGN OFF DATE

	BY	CHECKED
DESIGN	COREY SCHURR	GREGORY BAKER
DETAILS		
QUANTITIES		

PREPARED FOR THE
STATE OF CALIFORNIA
DEPARTMENT OF TRANSPORTATION

KAREN Y. WANG
PROJECT ENGINEER

BRIDGE NO
POST MILES 2.0

IERBYS TEMPORARY IMPROVEMENTS - BUILDING
EXTERIOR DETAILS

SHEET A610

DESIGN DETAIL SHEET (ENGLISH) (REV. 03/14/12)

ORIGINAL SCALE IN INCHES FOR REDUCED PLANS 0 1 2 3

UNIT: 04
PROJECT NUMBER AND PHASE: CONTRACT NO.: 0120F4

DISREGARD PRINTS BEARING EARLIER REVISION DATES

REVISION DATES				SHEET	OF
				32	66

C:\Users\jabraham\Documents\IERBYS\56185_Gateway Park - JAbraham - 3-27-13.rvt

3/27/2013 9:03:49 PM

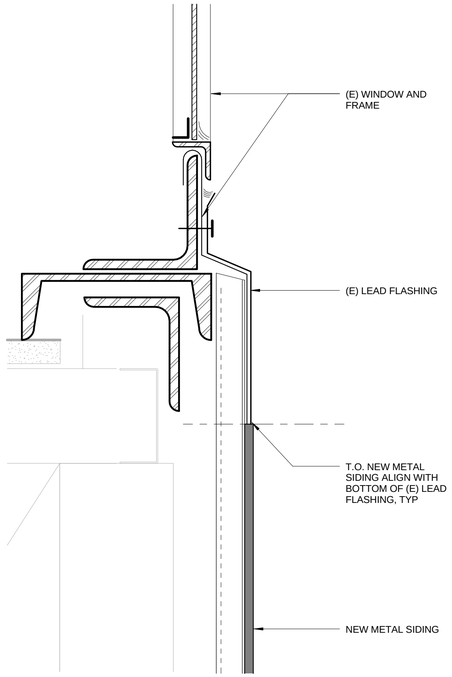

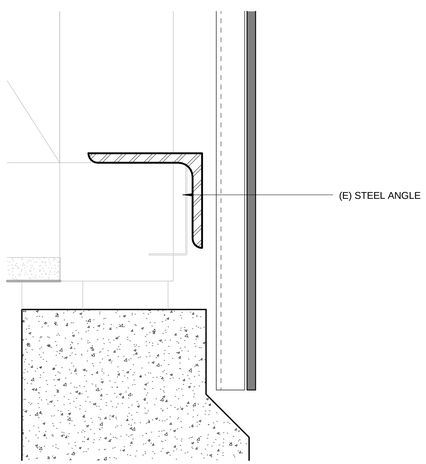

SECTION AT NEW METAL SIDING 7
6" = 1'-0"

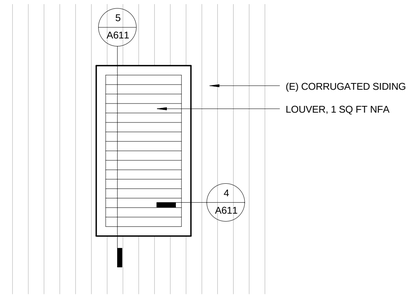

EAST LOUVER 6
1" = 1'-0"

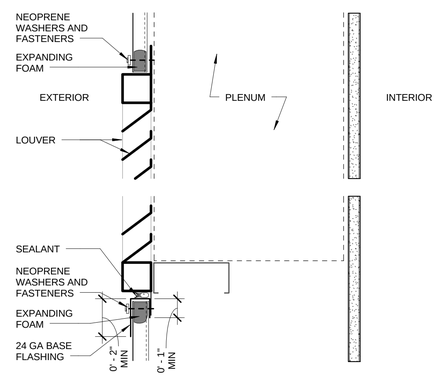

EAST LOUVER - HEAD 5
3" = 1'-0"

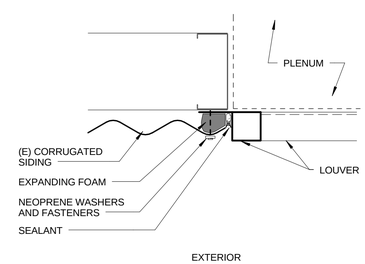

EAST LOUVER- JAMB 4
3" = 1'-0"

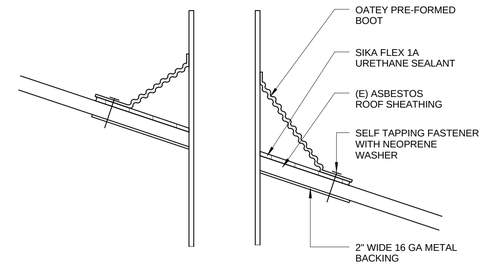

DETAIL AT PLUMBING VENT 3
1 1/2" = 1'-0"

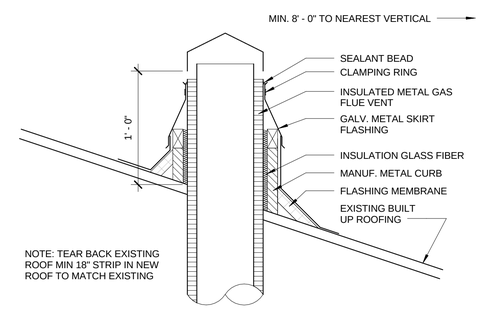

DETAIL AT FLUE 2
1 1/2" = 1'-0"

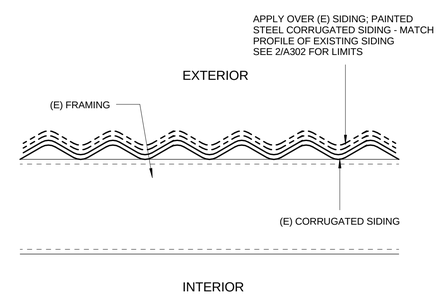

DETAIL AT NEW METAL SIDING 1
3" = 1'-0"

DIST	COUNTY	ROUTE	POST MILES TOTAL PROJECT	SHEET No	TOTAL SHEETS
04	ALA	80	2.0	1204al	1204

REGISTERED ARCHITECT — DATE 03/27/13

PLANS APPROVAL DATE

LICENSED ARCHITECT — GREGORY P. BAKER — C-16884 — 10.31.2013 RENEWAL DATE — STATE OF CALIFORNIA

The state of California or its officers or agents shall not be responsible for the accuracy or completeness of scanned copies of this plan sheet.

HNTB CORPORATION
1111 BROADWAY
9TH FLOOR
OAKLAND, CA 94607

HNTB Corporation Engineers Architects Planners

3/27/2013 9:35:39 PM

SAN FRANCISCO OAKLAND BAY BRIDGE EAST SPAN SEISMIC SAFETY PROJECT

IERBYS TEMPORARY IMPROVEMENTS - BUILDING

EXTERIOR DETAILS

SHEET A611

Quincy Wong — DESIGN OVERSIGHT
03/27/13 — SIGN OFF DATE

	BY	CHECKED
DESIGN	COREY SCHURR	GREGORY BAKER
DETAILS	BY	CHECKED
QUANTITIES	BY	CHECKED

PREPARED FOR THE STATE OF CALIFORNIA DEPARTMENT OF TRANSPORTATION

KAREN Y. WANG — PROJECT ENGINEER

BRIDGE NO

POST MILES 2.0

DESIGN DETAIL SHEET (ENGLISH) (REV. 03/14/12)

ORIGINAL SCALE IN INCHES FOR REDUCED PLANS 0 1 2 3

UNIT: 04
PROJECT NUMBER AND PHASE: CONTRACT NO.: 0120F4

DISREGARD PRINTS BEARING EARLIER REVISION DATES

REVISION DATES

SHEET 33 OF 66

C:\Users\jabraham\Documents\IERBYS\56185_Gateway Park - JAbraham - 3-27-13.rvt

DIST	COUNTY	ROUTE	POST MILES TOTAL PROJECT	SHEET No	TOTAL SHEETS
04	ALA	80	2.0	1204am	1204

REGISTERED ARCHITECT

03/27/13
DATE

LICENSED ARCHITECT
GREGORY P. BAKER
C-16884
10.31.2013
RENEWAL DATE
STATE OF CALIFORNIA

PLANS APPROVAL DATE

The state of California or its officers or agents shall not be responsible for the accuracy or completeness of scanned copies of this plan sheet.

HNTB CORPORATION
1111 BROADWAY
9TH FLOOR
OAKLAND, CA 94607

HNTB Corporation
Engineers Architects Planners

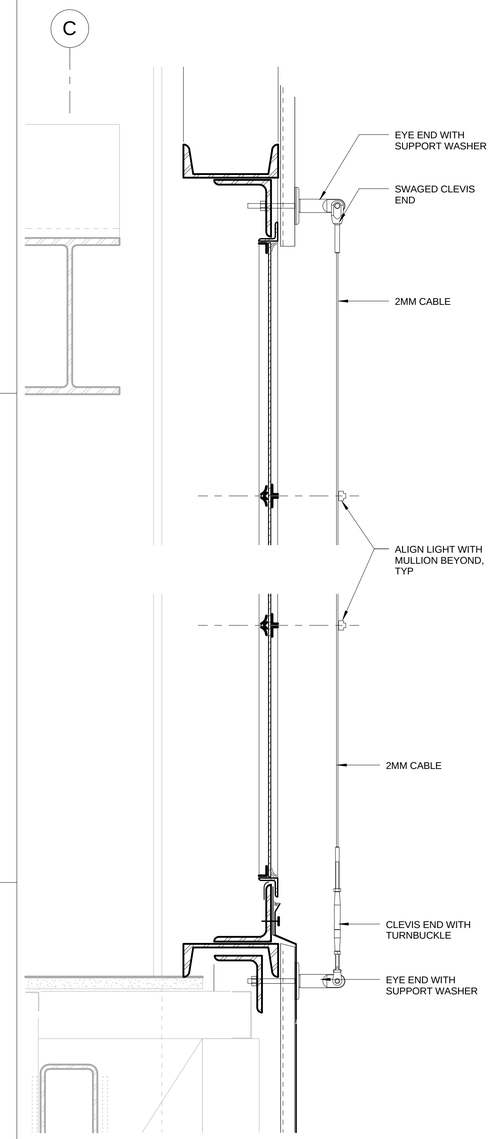

SIGNAGE MOUNTING DETAIL (1)
3" = 1'-0"

3/27/2013 9:03:58 PM

SAN FRANCISCO OAKLAND BAY BRIDGE
EAST SPAN SEISMIC SAFETY PROJECT

IERBYS TEMPORARY IMPROVEMENTS - BUILDING

EXTERIOR DETAILS

SHEET A612

Quincy Wong
DESIGN OVERSIGHT

03/27/13
SIGN OFF DATE

	BY	CHECKED
DESIGN	COREY SCHURR	GREGORY BAKER
DETAILS		
QUANTITIES		

PREPARED FOR THE
STATE OF CALIFORNIA
DEPARTMENT OF TRANSPORTATION

KAREN Y. WANG
PROJECT ENGINEER

BRIDGE NO

POST MILES 2.0

DESIGN DETAIL SHEET (ENGLISH) (REV. 03/14/12)

ORIGINAL SCALE IN INCHES FOR REDUCED PLANS 0 1 2 3

UNIT: 04
PROJECT NUMBER AND PHASE: CONTRACT NO.: 0120F4

DISREGARD PRINTS BEARING EARLIER REVISION DATES

REVISION DATES ___ ___ ___ ___

SHEET 34 **OF** 66

C:\Users\jabraham\Documents\IERBYS\56185_Gateway Park - JAbraham - 3-27-13.rvt

DIST	COUNTY	ROUTE	POST MILES TOTAL PROJECT	SHEET No	TOTAL SHEETS
04	ALA	80	2.0	1204an	1204

REGISTERED ARCHITECT — DATE 03/27/13

LICENSED ARCHITECT — GREGORY P. BAKER — C-16884 — 10.31.2013 RENEWAL DATE — STATE OF CALIFORNIA

PLANS APPROVAL DATE

The state of California or its officers or agents shall not be responsible for the accuracy or completeness of scanned copies of this plan sheet.

HNTB CORPORATION
1111 BROADWAY
9TH FLOOR
OAKLAND, CA 94607

HNTB Corporation Engineers Architects Planners

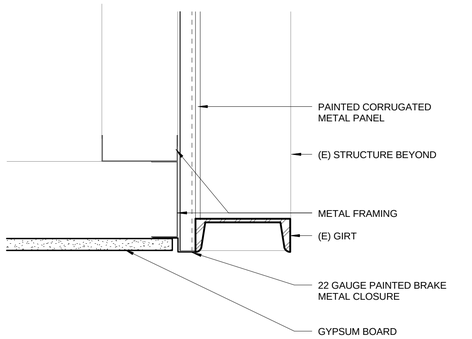

DETAIL AT TOP OF COVE (15)
3" = 1'-0"

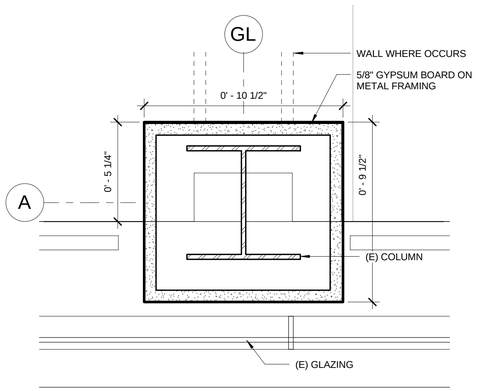

FURRED COLUMN (14)
3" = 1'-0"

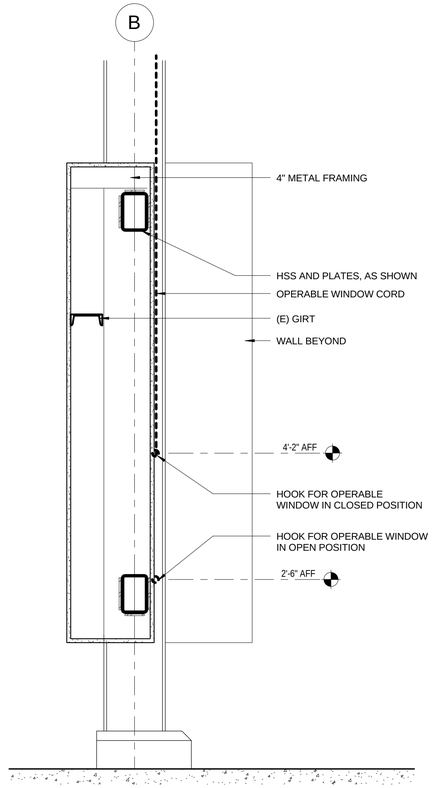

COLUMN ELEVATION (11)
1" = 1'-0"

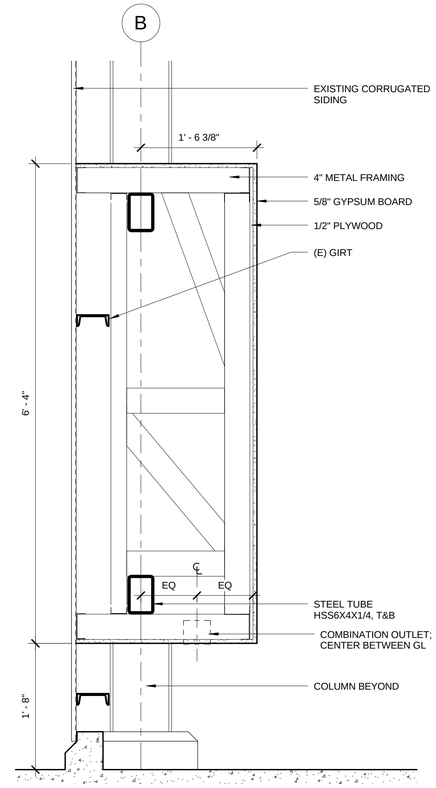

STORAGE SOUTH PARTITION WALL, GL 6-9 (8)
1" = 1'-0"

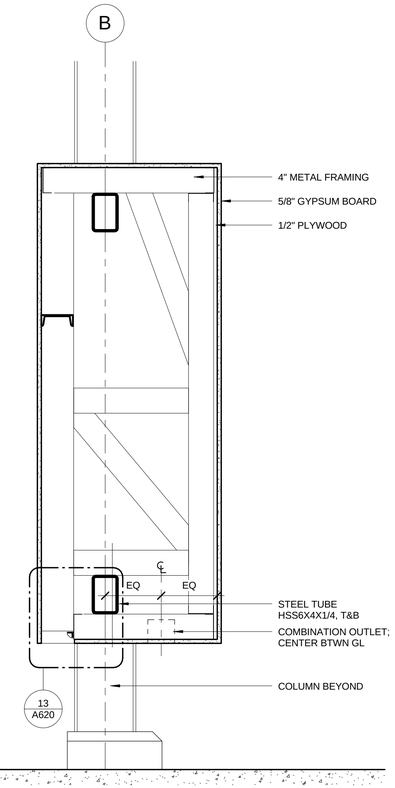

STORAGE SOUTH PARTITION WALL, GL 9-16 (5)
1" = 1'-0"

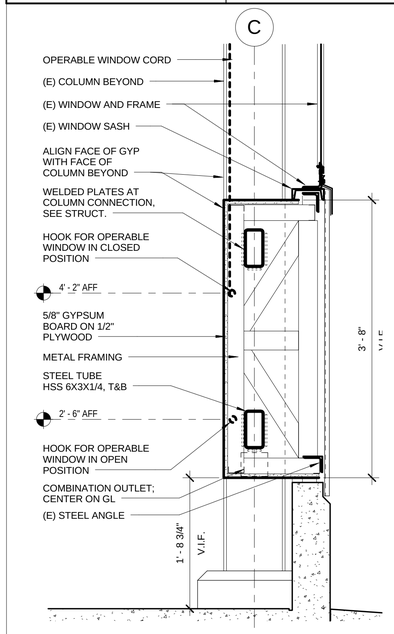

STORAGE NORTH PARTITION WALL (2)
1" = 1'-0"

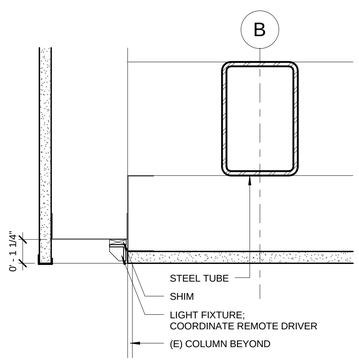

LIGHT FIXTURE CAVITY AT PARTITION WALL (13)
3" = 1'-0"

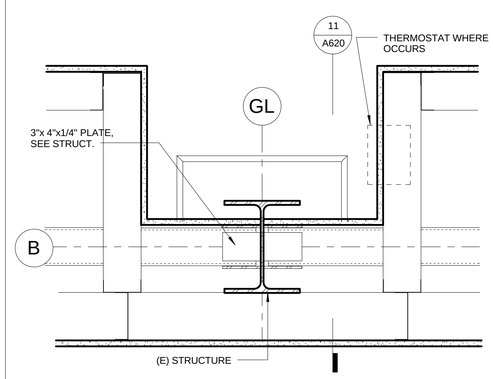

PARTITION WALL CONNECTION AT COLUMN (10)
1 1/2" = 1'-0"

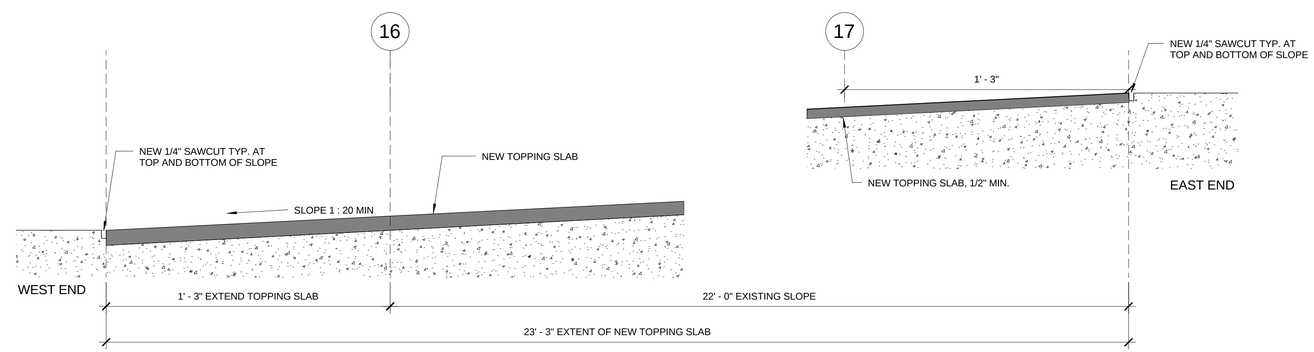

TOPPING SLAB AT SLOPED AREA (1)
3" = 1'-0"

SAN FRANCISCO OAKLAND BAY BRIDGE
EAST SPAN SEISMIC SAFETY PROJECT

IERBYS TEMPORARY IMPROVEMENTS - BUILDING

INTERIOR DETAILS

SHEET A620

Quincy Wong — DESIGN OVERSIGHT
03/27/13 — SIGN OFF DATE

	BY	CHECKED
DESIGN	COREY SCHURR	GREGORY BAKER
DETAILS	BY	CHECKED
QUANTITIES	BY	CHECKED

PREPARED FOR THE STATE OF CALIFORNIA DEPARTMENT OF TRANSPORTATION

KAREN Y. WANG — PROJECT ENGINEER

BRIDGE NO — POST MILES 2.0

DESIGN DETAIL SHEET (ENGLISH) (REV. 03/14/12)

ORIGINAL SCALE IN INCHES FOR REDUCED PLANS 0 1 2 3

UNIT: 04
PROJECT NUMBER AND PHASE: CONTRACT NO.: 0120F4

DISREGARD PRINTS BEARING EARLIER REVISION DATES

REVISION DATES — SHEET 35 OF 66

C:\Users\jabraham\Documents\IERBYS\56185_Gateway Park - JAbraham - 3-27-13.rvt

3/27/2013 9:04:03 PM

DIST	COUNTY	ROUTE	POST MILES TOTAL PROJECT	SHEET No	TOTAL SHEETS
04	ALA	80	2.0	1204ao	1204

REGISTERED ARCHITECT — DATE 03/27/13

PLANS APPROVAL DATE

LICENSED ARCHITECT — GREGORY P. BAKER — C-16884 — 10.31.2013 RENEWAL DATE — STATE OF CALIFORNIA

The state of California or its officers or agents shall not be responsible for the accuracy or completeness of scanned copies of this plan sheet.

HNTB CORPORATION
1111 BROADWAY
9TH FLOOR
OAKLAND, CA 94607

HNTB Corporation Engineers Architects Planners

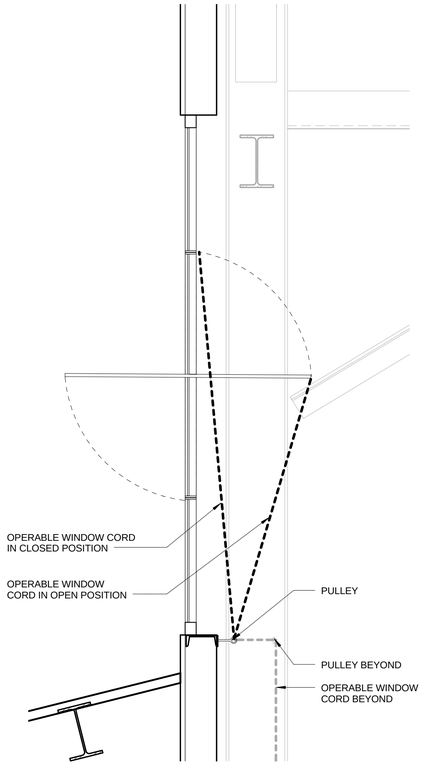

SECTION AT OPERABLE WINDOW (14)
1" = 1'-0"

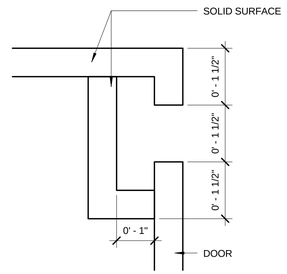

DOORS AT BASE CABINET (12)
6" = 1'-0"

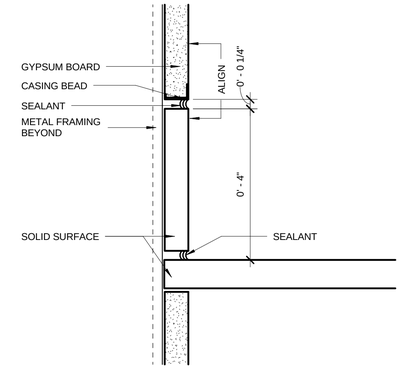

COUNTERTOP SPLASH AT BREAK AREA (9)
6" = 1'-0"

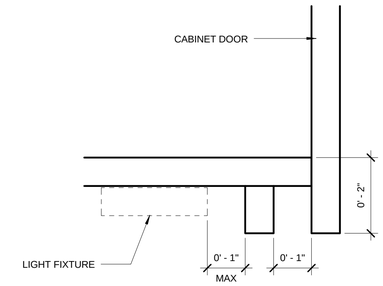

UPPER CABINET AT BREAK AREA (6)
6" = 1'-0"

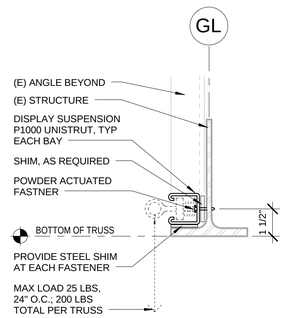

DISPLAY SUSPENSION - LOOKING NORTH (11)
3" = 1'-0"

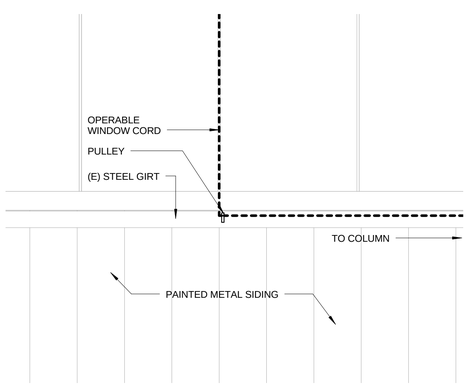

OPERABLE WINDOW AT SILL (13)
1 1/2" = 1'-0"

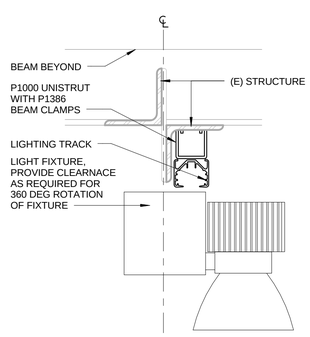

LIGHTING TRACK (10)
3" = 1'-0"

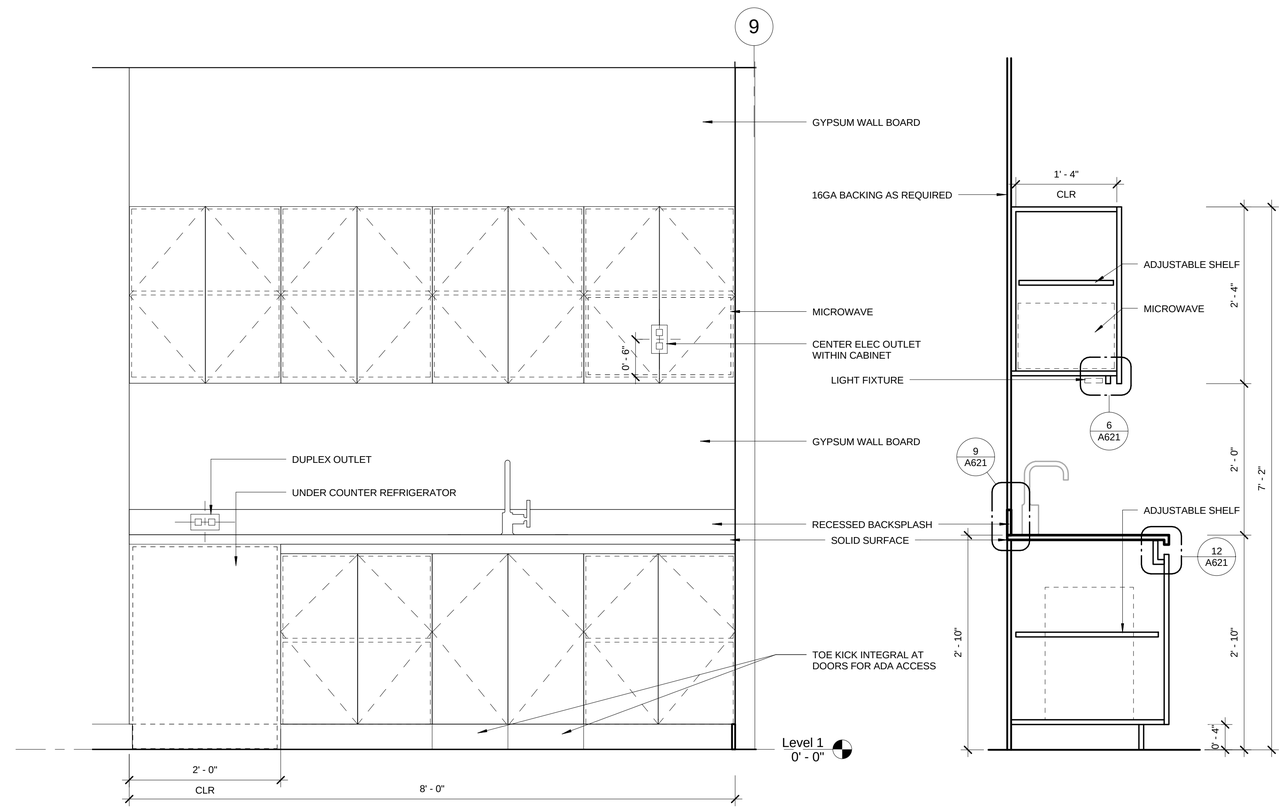

BREAK AREA CASEWORK (1)
1" = 1'-0"

SAN FRANCISCO OAKLAND BAY BRIDGE
EAST SPAN SEISMIC SAFETY PROJECT

IERBYS TEMPORARY IMPROVEMENTS - BUILDING

INTERIOR DETAILS

SHEET A621

Quincy Wong
DESIGN OVERSIGHT

03/27/13
SIGN OFF DATE

	BY	CHECKED
DESIGN	COREY SCHURR	GREGORY BAKER
DETAILS	BY	CHECKED
QUANTITIES	BY	CHECKED

PREPARED FOR THE STATE OF CALIFORNIA DEPARTMENT OF TRANSPORTATION

KAREN Y. WANG
PROJECT ENGINEER

BRIDGE NO
POST MILES 2.0

DESIGN DETAIL SHEET (ENGLISH) (REV. 03/14/12)

ORIGINAL SCALE IN INCHES FOR REDUCED PLANS 0 1 2 3

UNIT: 04
PROJECT NUMBER AND PHASE: CONTRACT NO.: 0120F4

DISREGARD PRINTS BEARING EARLIER REVISION DATES

REVISION DATES

SHEET 36 OF 66

C:\Users\jabraham\Documents\IERBYS\56185_Gateway Park - JAbraham - 3-27-13.rvt

3/27/2013 9:04:11 PM

DIST	COUNTY	ROUTE	POST MILES TOTAL PROJECT	SHEET No	TOTAL SHEETS
04	ALA	80	2.0	1204ap	1204

REGISTERED ARCHITECT 03/27/13 DATE

PLANS APPROVAL DATE

LICENSED ARCHITECT GREGORY P. BAKER C-16884 10.31.2013 RENEWAL DATE STATE OF CALIFORNIA

The state of California or its officers or agents shall not be responsible for the accuracy or completeness of scanned copies of this plan sheet.

HNTB CORPORATION
1111 BROADWAY
9TH FLOOR
OAKLAND, CA 94607

HNTB Corporation Engineers Architects Planners

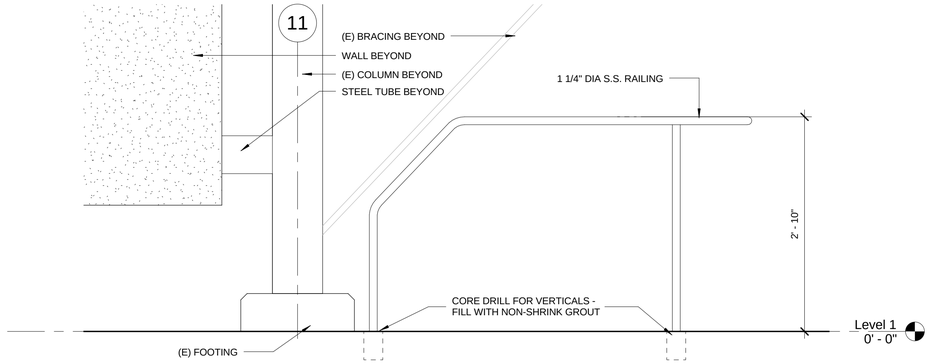

ADA RAILING - ELEVATION 6
1" = 1'-0"

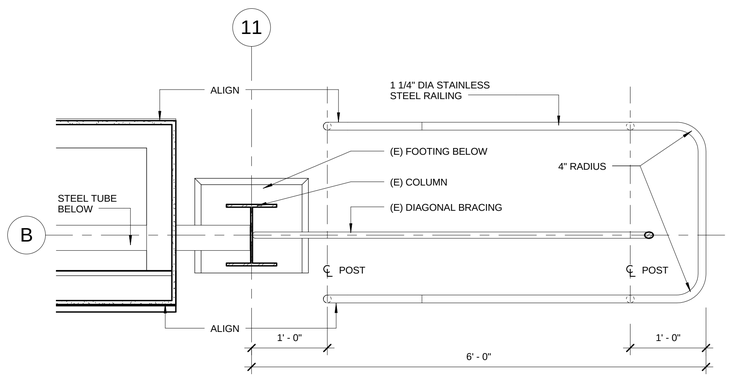

ADA RAILING - PLAN 5
1" = 1'-0"

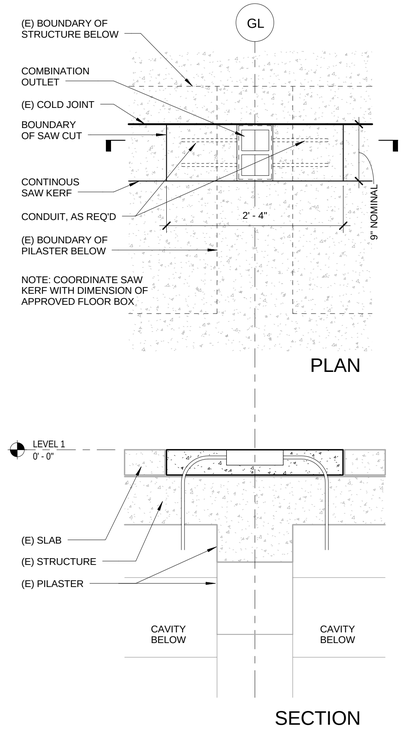

NOTE: SEE STRUCT FOR NOTES REGARDING REBAR CLEARANCE AND INFILL CONCRETE.

COMBINATION FLOOR BOXES 2
1" = 1'-0"

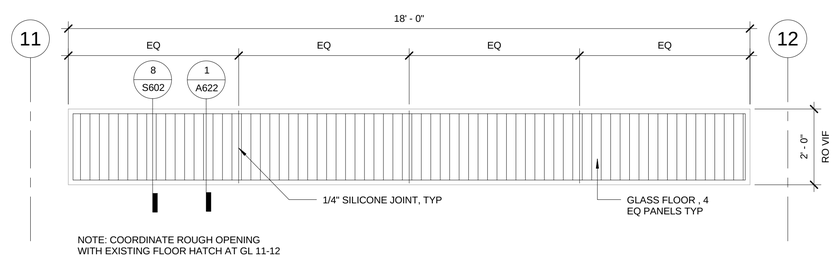

ENLARGED GLASS FLOOR 4
1/2" = 1'-0"

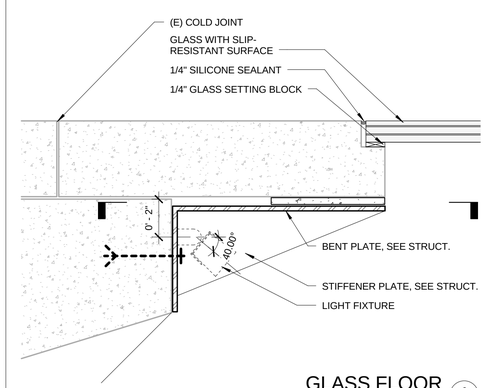

GLASS FLOOR 1
3" = 1'-0"

SAN FRANCISCO OAKLAND BAY BRIDGE
EAST SPAN SEISMIC SAFETY PROJECT

IERBYS TEMPORARY IMPROVEMENTS - BUILDING

INTERIOR DETAILS

SHEET A622

Quincy Wong
DESIGN OVERSIGHT
03/27/13
SIGN OFF DATE

	BY	CHECKED
DESIGN	COREY SCHURR	GREGORY BAKER
DETAILS	BY	CHECKED
QUANTITIES	BY	CHECKED

PREPARED FOR THE STATE OF CALIFORNIA DEPARTMENT OF TRANSPORTATION

KAREN Y. WANG
PROJECT ENGINEER

BRIDGE NO
POST MILES 2.0

DESIGN DETAIL SHEET (ENGLISH) (REV. 03/14/12)

ORIGINAL SCALE IN INCHES FOR REDUCED PLANS 0 1 2 3

UNIT: 04
PROJECT NUMBER AND PHASE:
CONTRACT NO.: 0120F4

DISREGARD PRINTS BEARING EARLIER REVISION DATES

REVISION DATES ___ ___ ___ ___

SHEET 37 OF 66

C:\Users\jabraham\Documents\IERBYS\56185_Gateway Park - JAbraham - 3-27-13.rvt

3/27/2013 9:04:16 PM

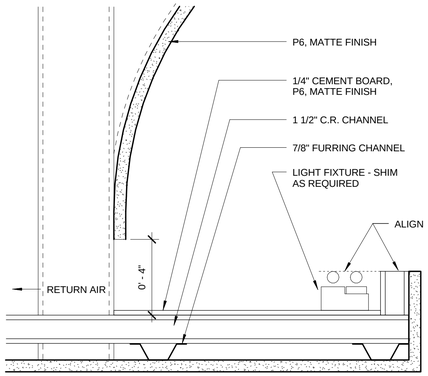

LIGHT COVE AT CORRIDOR (12)
3" = 1'-0"

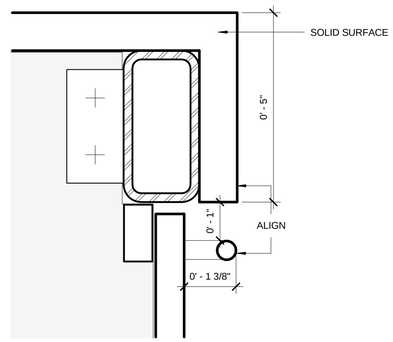

CABINET PULL AT RESTROOM (9)
6" = 1'-0"

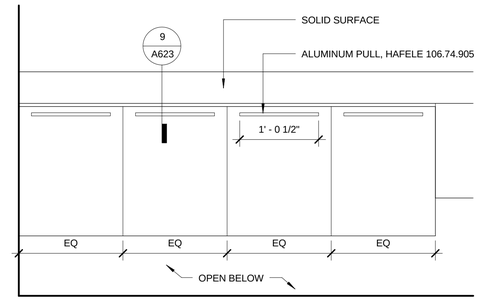

CABINET ELEVATION IN RESTROOM (6)
1" = 1'-0"

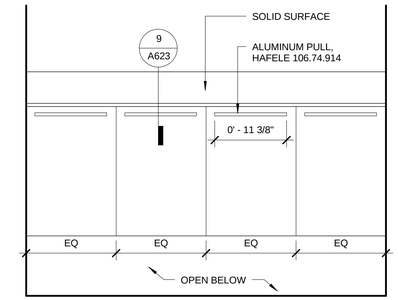

CABINET ELEVATION IN ACCESSIBLE STALL (3)
1" = 1'-0"

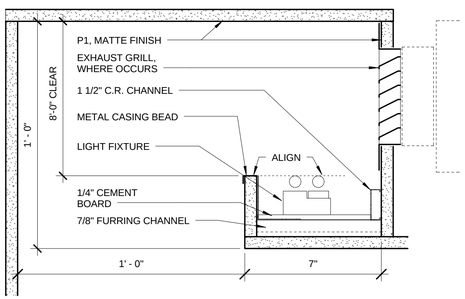

LIGHT COVE AT RESTROOM (11)
3" = 1'-0"

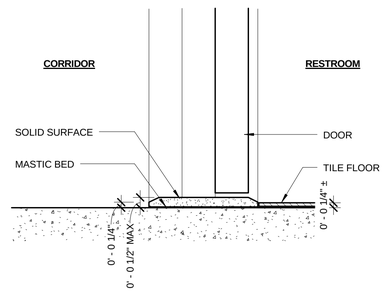

DOOR SILL AT THRESHOLD (8)
3" = 1'-0"

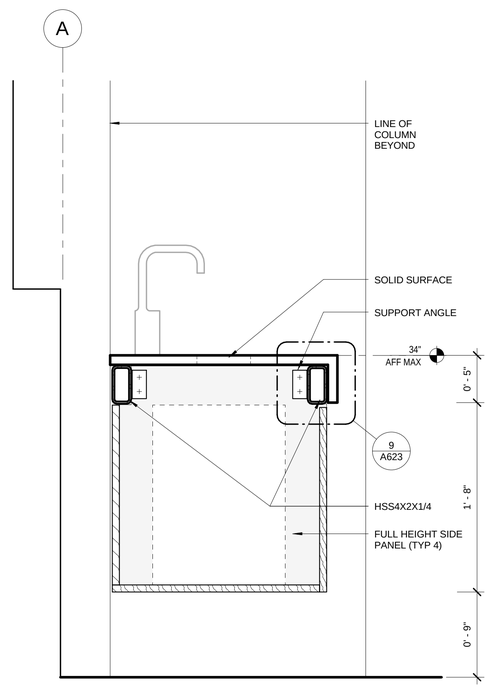

NOTE: SEE STRUCT FOR TUBE CONNECTION DETAILS AT WALL.

RESTROOM CASEWORK (4)
1 1/2" = 1'-0"

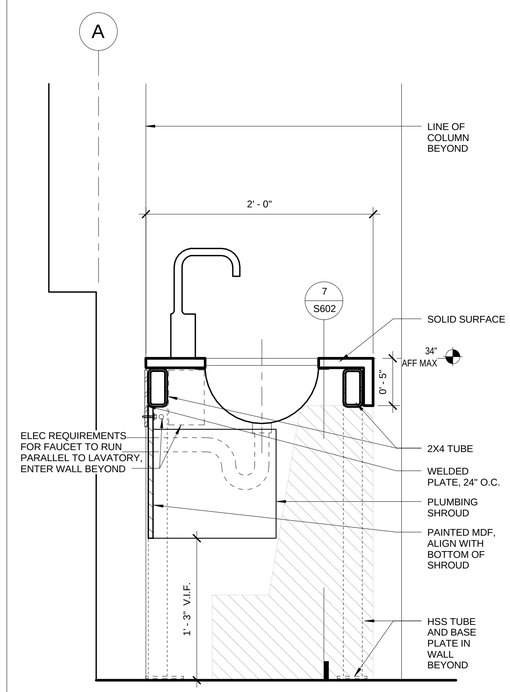

NOTE: SEE STRUCT FOR TUBE CONNECTION DETAILS AT WALL.

RESTROOM COUNTERTOP (1)
1 1/2" = 1'-0"

DIST	COUNTY	ROUTE	POST MILES TOTAL PROJECT	SHEET No	TOTAL SHEETS
04	ALA	80	2.0	1204aq	1204

REGISTERED ARCHITECT — DATE 03/27/13

PLANS APPROVAL DATE

LICENSED ARCHITECT — GREGORY P. BAKER — C-16884 — 10.31.2013 RENEWAL DATE — STATE OF CALIFORNIA

The state of California or its officers or agents shall not be responsible for the accuracy or completeness of scanned copies of this plan sheet.

HNTB CORPORATION
1111 BROADWAY
9TH FLOOR
OAKLAND, CA 94607

HNTB Corporation Engineers Architects Planners

3/27/2013 9:04:24 PM

Quincy Wong
DESIGN OVERSIGHT
03/27/13
SIGN OFF DATE

	BY	CHECKED
DESIGN	COREY SCHURR	GREGORY BAKER
DETAILS	BY	CHECKED
QUANTITIES	BY	CHECKED

PREPARED FOR THE STATE OF CALIFORNIA DEPARTMENT OF TRANSPORTATION

KAREN Y. WANG
PROJECT ENGINEER

BRIDGE NO
POST MILES 2.0

SAN FRANCISCO OAKLAND BAY BRIDGE EAST SPAN SEISMIC SAFETY PROJECT

IERBYS TEMPORARY IMPROVEMENTS - BUILDING

INTERIOR DETAILS

SHEET A623

DESIGN DETAIL SHEET (ENGLISH) (REV. 03/14/12)

ORIGINAL SCALE IN INCHES FOR REDUCED PLANS 0 1 2 3

UNIT: 04
PROJECT NUMBER AND PHASE: CONTRACT NO.: 0120F4

DISREGARD PRINTS BEARING EARLIER REVISION DATES

REVISION DATES ___ ___ ___ ___

SHEET 38 OF 66

C:\Users\jabraham\Documents\IERBYS\56185_Gateway Park - JAbraham - 3-27-13.rvt

DIST	COUNTY	ROUTE	POST MILES TOTAL PROJECT	SHEET No	TOTAL SHEETS
04	ALA	80	2.0	1204ar	1204

REGISTERED ARCHITECT — DATE 03/27/13

PLANS APPROVAL DATE

LICENSED ARCHITECT — GREGORY P. BAKER — C-16884 — 10.31.2013 RENEWAL DATE — STATE OF CALIFORNIA

The state of California or its officers or agents shall not be responsible for the accuracy or completeness of scanned copies of this plan sheet.

HNTB CORPORATION
1111 BROADWAY
9TH FLOOR
OAKLAND, CA 94607

HNTB Corporation
Engineers Architects Planners

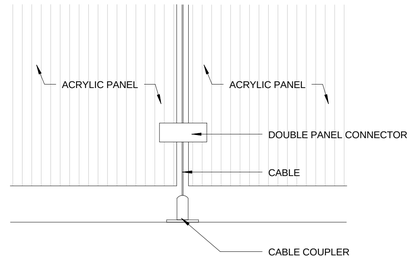

CONNECTION AT ACRYLIC PANEL (6)
3" = 1'-0"

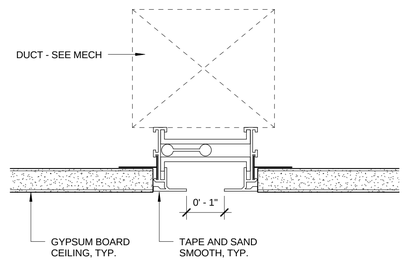

LINEAR DIFFUSER (5)
6" = 1'-0"

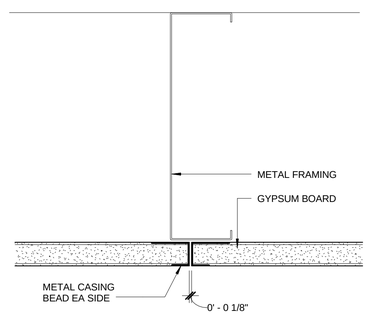

DETAIL AT REVEAL (4)
6" = 1'-0"

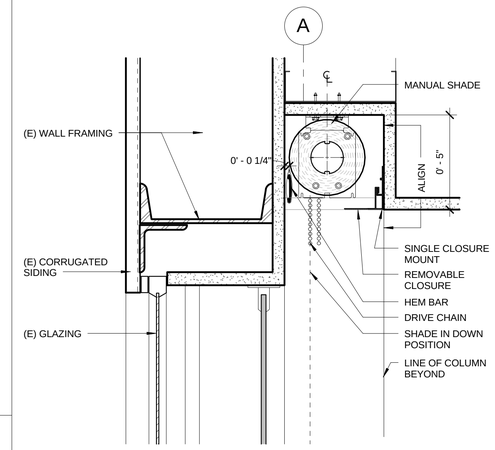

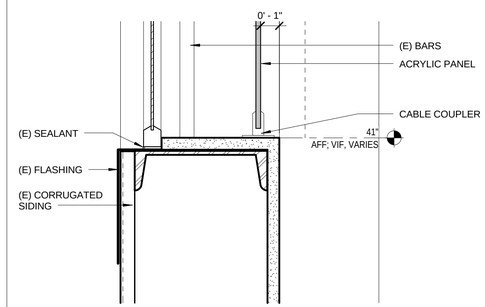

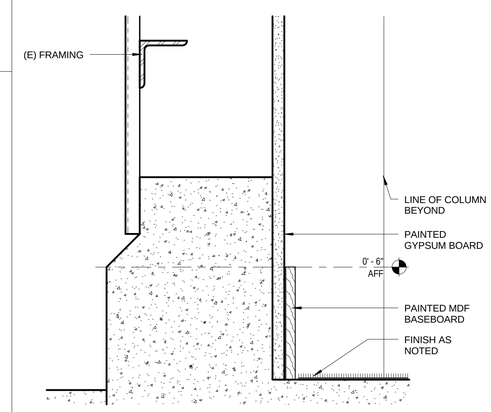

WALL SECTION AT LOW BAY (1)
3" = 1'-0"

SAN FRANCISCO OAKLAND BAY BRIDGE EAST SPAN SEISMIC SAFETY PROJECT

IERBYS TEMPORARY IMPROVEMENTS - BUILDING

INTERIOR DETAILS

SHEET A624

Quincy Wong — DESIGN OVERSIGHT
03/27/13 — SIGN OFF DATE

	BY	CHECKED
DESIGN	COREY SCHURR	GREGORY BAKER
DETAILS		
QUANTITIES		

PREPARED FOR THE STATE OF CALIFORNIA DEPARTMENT OF TRANSPORTATION

KAREN Y. WANG — PROJECT ENGINEER

BRIDGE NO

POST MILES 2.0

DESIGN DETAIL SHEET (ENGLISH) (REV. 03/14/12)

ORIGINAL SCALE IN INCHES FOR REDUCED PLANS 0 1 2 3

UNIT: 04
PROJECT NUMBER AND PHASE: CONTRACT NO.: 0120F4

DISREGARD PRINTS BEARING EARLIER REVISION DATES

REVISION DATES ___ ___ ___ ___

SHEET 39 OF 66

C:\Users\jabraham\Documents\IERBYS\56185_Gateway Park - JAbraham - 3-27-13.rvt

3/27/2013 9:04:29 PM

DIST	COUNTY	ROUTE	POST MILES TOTAL PROJECT	SHEET No	TOTAL SHEETS
04	ALA	80	2.0		1204

Rene Vignos 03/27/13
DATE

PLANS APPROVAL DATE

REGISTERED PROFESSIONAL ENGINEER RENE P VIGNOS No. S4463 Exp. 12/31/14 STRUCTURAL STATE OF CALIFORNIA

The state of California or its officers or agents shall not be responsible for the accuracy or completeness of scanned copies of this plan sheet.

FORELL/ ELSESSER
Forell/Elsesser Engineers
160 Pine Street, Suite 600
San Francisco, CA 94111

NOTE:
INFORMATION ON THIS SHEET IS FOR STRUCTURAL REFERENCE ONLY. ALL INFORMATION RELATING TO FINISHES, ASSEMBLIES, AND NON-STRUCTURAL MATERIALS SHOULD BE REFERENCED FROM ARCHITECTURAL DRAWINGS.

GENERAL WELDING NOTES
1. GRIND ALL WELDS SMOOTH
2. REMOVE AND GRIND ALL WELDING AIDS
3. REMOVE AND GRIND ALL ERECTION AIDS

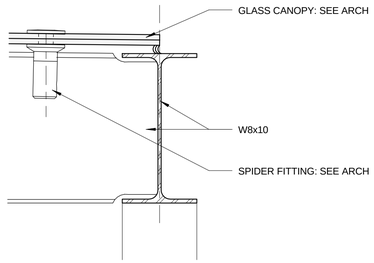

CONNECTION AT EDGE (12)
3" = 1'-0"

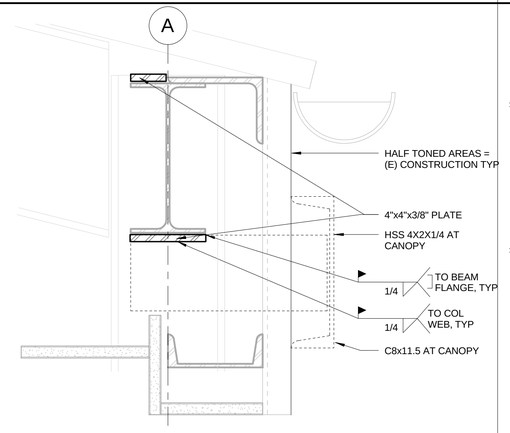

EXISTING BEAM CONNECTION AT COLUMN (9)
3" = 1'-0"

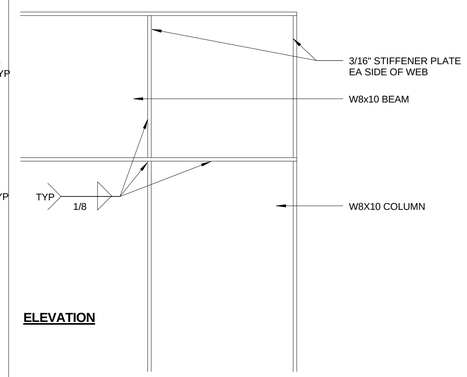

ELEVATION

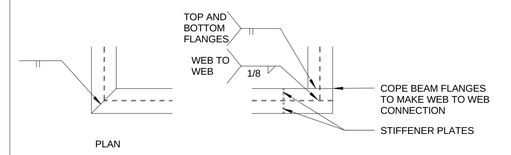

CONNECTION - PLAN (3)
1" = 1'-0"

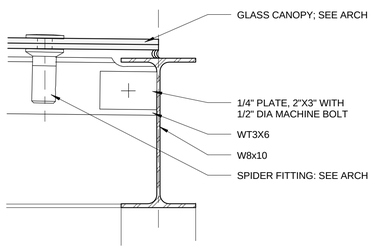

CONNECTION FACING EAST (11)
3" = 1'-0"

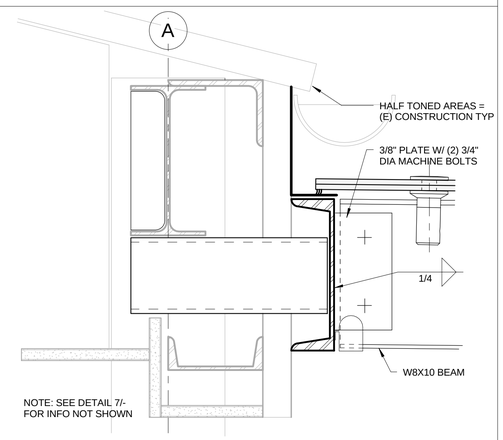

CONNECTION AT EDGE (8)
3" = 1'-0"

SECTION

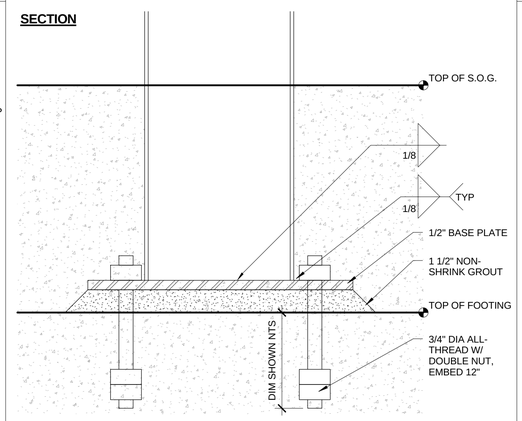

CONNECTION AT COLUMN (5)
3" = 1'-0"

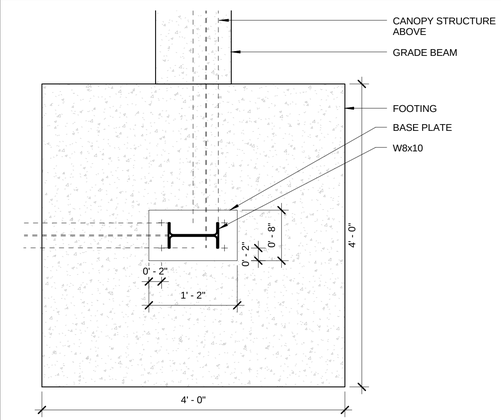

COLUMN FOOTING AT CANOPY (2)
1" = 1'-0"

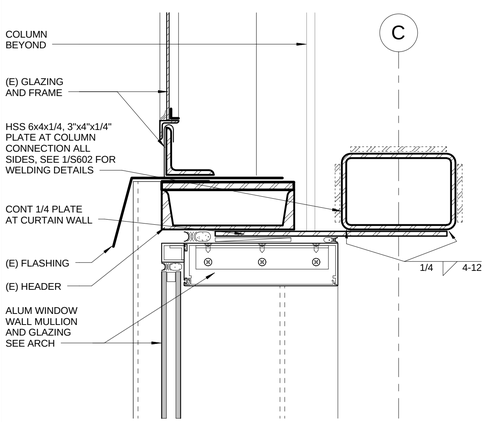

NORTH INFILL GLAZING AT HEAD (10)
3" = 1'-0"

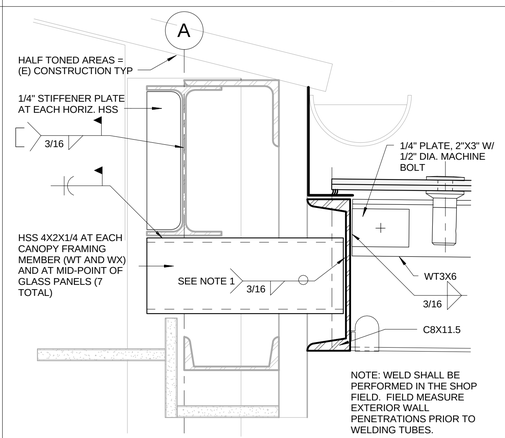

CONNECTION FACING EAST (7)
3" = 1'-0"

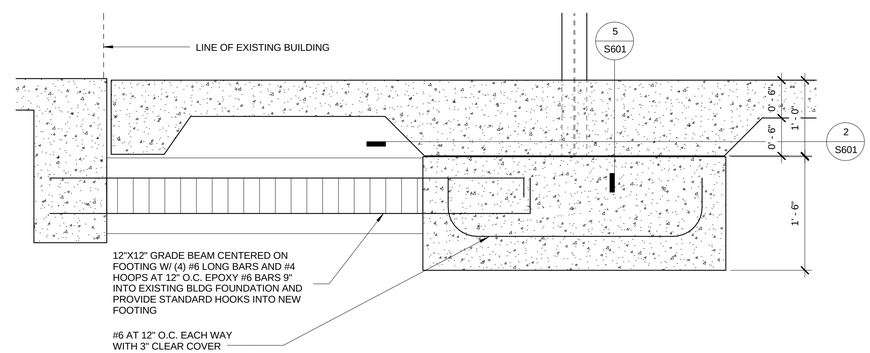

COLUMN FOOTING AT CANOPY (1)
1" = 1'-0"

SAN FRANCISCO OAKLAND BAY BRIDGE
EAST SPAN SEISMIC SAFETY PROJECT

IERBYS TEMPORARY IMPROVEMENTS - BUILDING

STRUCTURAL DETAILS

SHEET S601

Edgardo Isidro
DESIGN OVERSIGHT
03/27/13
SIGN OFF DATE

	BY	CHECKED
DESIGN	CHRIS PETTEYS	RENE VIGNOS
DETAILS	BY	CHECKED
QUANTITIES	BY	CHECKED

PREPARED FOR THE STATE OF CALIFORNIA DEPARTMENT OF TRANSPORTATION

KAREN Y. WANG
PROJECT ENGINEER

BRIDGE NO
POST MILES 2.0

DESIGN DETAIL SHEET (ENGLISH) (REV. 03/14/12)

ORIGINAL SCALE IN INCHES FOR REDUCED PLANS 0 1 2 3

UNIT: 04
PROJECT NUMBER AND PHASE:
CONTRACT NO.: 0120F4

DISREGARD PRINTS BEARING EARLIER REVISION DATES

REVISION DATES

SHEET 40 OF 66

C:\Users\cschurr\Documents\56185_Gateway Park - Central_cschurr.rvt

3/27/2013 5:02:57 PM

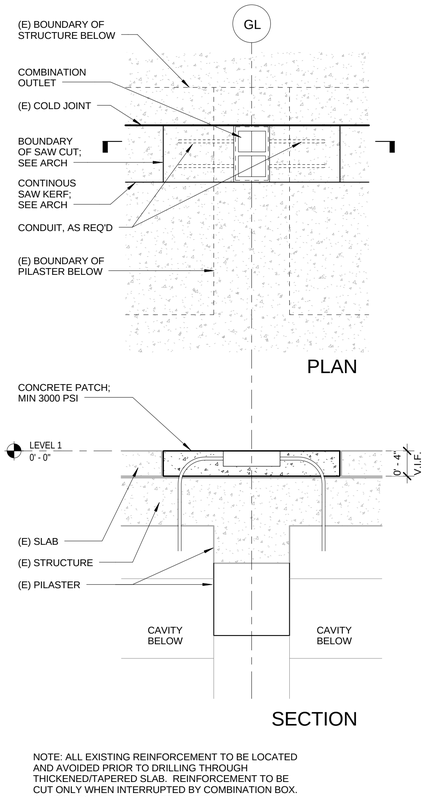

NOTE: ALL EXISTING REINFORCEMENT TO BE LOCATED AND AVOIDED PRIOR TO DRILLING THROUGH THICKENED/TAPERED SLAB. REINFORCEMENT TO BE CUT ONLY WHEN INTERRUPTED BY COMBINATION BOX. ALL REINFORCEMENT OTHERWISE TO REMAIN IN TACT.

COMBINATION FLOOR BOXES (11)
1" = 1'-0"

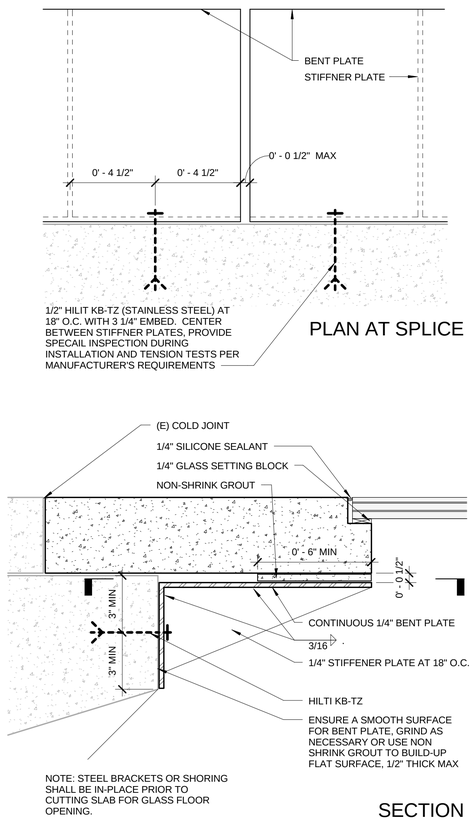

NOTE: STEEL BRACKETS OR SHORING SHALL BE IN-PLACE PRIOR TO CUTTING SLAB FOR GLASS FLOOR OPENING.

GLASS FLOOR (8)
3" = 1'-0"

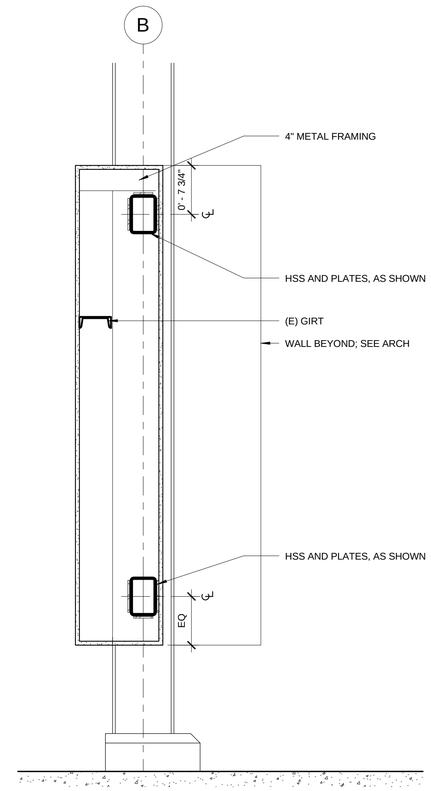

COLUMN ELEVATION AT PARTITION (5)
1" = 1'-0"

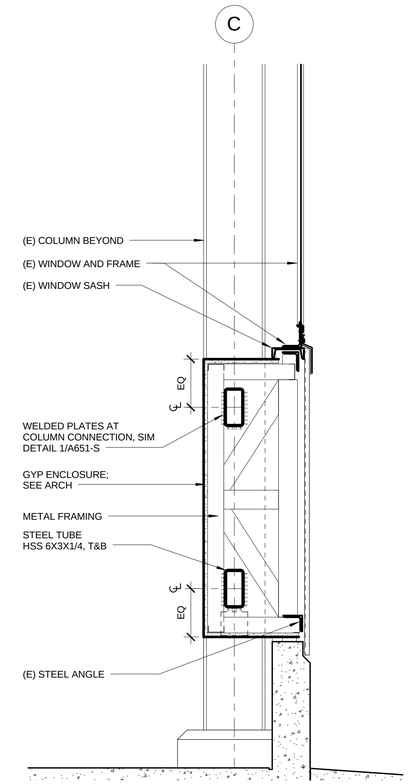

STORAGE NORTH PARTITION WALL (2)
1" = 1'-0"

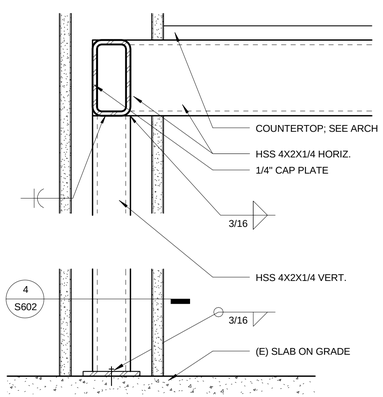

SECTION AT STEEL TUBE (10)
3" = 1'-0"

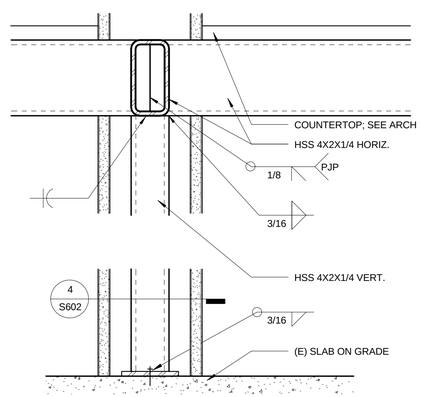

SECTION AT STEEL TUBE (7)
3" = 1'-0"

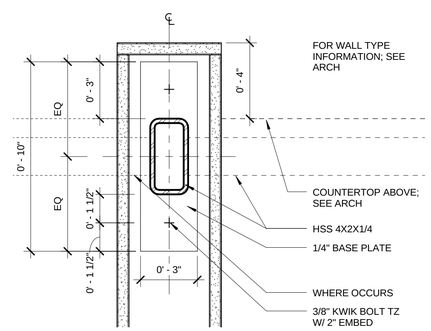

PLAN DETAIL AT STEEL TUBE (4)
3" = 1'-0"

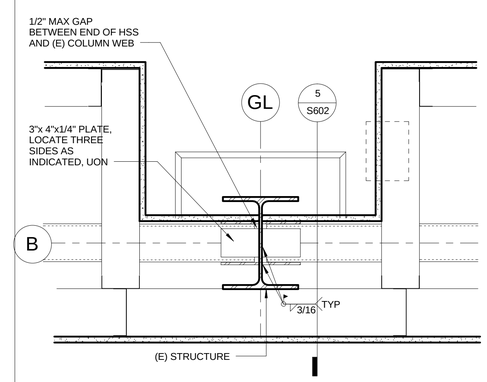

PARTITION AT COLUMN (1)
1 1/2" = 1'-0"

DIST	COUNTY	ROUTE	POST MILES TOTAL PROJECT	SHEET No	TOTAL SHEETS
04	ALA	80	2.0		1204

Rene Vignos — 03/27/13 DATE

PLANS APPROVAL DATE

REGISTERED PROFESSIONAL ENGINEER — RENE P VIGNOS — No. S4464 — Exp. 12/31/14 — STRUCTURAL — STATE OF CALIFORNIA

The state of California or its officers or agents shall not be responsible for the accuracy or completeness of scanned copies of this plan sheet.

FORELL/ ELSESSER
Forell/Elsesser Engineers
160 Pine Street, Suite 600
San Francisco, CA 94111

NOTE:
INFORMATION ON THIS SHEET IS FOR STRUCTURAL REFERENCE ONLY. ALL INFORMATION RELATING TO FINISHES, ASSEMBLIES, AND NON-STRUCTURAL MATERIALS SHOULD BE REFERENCED FROM ARCHITECTURAL DRAWINGS.

3/27/2013 5:04:10 PM

SAN FRANCISCO OAKLAND BAY BRIDGE EAST SPAN SEISMIC SAFETY PROJECT

IERBYS TEMPORARY IMPROVEMENTS - BUILDING

STRUCTURAL DETAILS

SHEET S602

Edgardo Isidro — DESIGN OVERSIGHT
03/27/13 — SIGN OFF DATE

	BY	CHECKED
DESIGN	CHRIS PETTEYS	RENE VIGNOS
DETAILS	BY	CHECKED
QUANTITIES	BY	CHECKED

PREPARED FOR THE STATE OF CALIFORNIA DEPARTMENT OF TRANSPORTATION

KAREN Y. WANG — PROJECT ENGINEER

BRIDGE NO
POST MILES 2.0

DESIGN DETAIL SHEET (ENGLISH) (REV. 03/14/12)

ORIGINAL SCALE IN INCHES FOR REDUCED PLANS 0 1 2 3

UNIT: 04
PROJECT NUMBER AND PHASE:
CONTRACT NO.: 0120F4

DISREGARD PRINTS BEARING EARLIER REVISION DATES

REVISION DATES

SHEET 41 OF 66

C:\Users\cschurr\Documents\56185_Gateway Park - Central_cschurr.rvt

DIST	COUNTY	ROUTE	POST MILES TOTAL PROJECT	SHEET No	TOTAL SHEETS
04	ALA	80	2.0	1204au	1204

REGISTERED ENGINEER — 03/27/13 DATE

PLANS APPROVAL DATE

REGISTERED PROFESSIONAL ENGINEER — JAMES R. GRONEK — No. M 34898 — MECHANICAL — STATE OF CALIFORNIA

The state of California or its officers or agents shall not be responsible for the accuracy or completeness of scanned copies of this plan sheet.

WSP • FLACK + KURTZ
405 HOWARD ST. #500
SAN FRANCISCO, CA 94106

MECHANICAL LEGEND AND ABBREVIATIONS

ABBREVIATIONS – MECHANICAL

ABV	ABOVE
ACD	AUTOMATIC CONTROL DAMPER
AD	ACCESS DOOR
AL	ACOUSTICAL LINING
ARCH	ARCHITECTURAL
ATC	AUTOMATIC TEMPERATURE CONTROL
BD	BALANCING DAMPER
BDD	BACK DRAFT DAMPER
BO	BLANK OFF
BHP	BRAKE HORSE POWER
BTU	BRITISH THERMAL UNIT
CC	COOLING COIL
CD	CEILING DIFFUSER
CFF	CAP FOR FUTURE
CFM	CUBIC FEET PER MINUTE
CG	CEILING GRILLE
CO	CLEAN OUT
COMP	COMPRESSOR
CR	CEILING REGISTER
CU	CONDENSING UNIT
DB	DRY BULB
DIA	DIAMETER
DN	DOWN
DX	DIRECT EXPANSION
(E)	EXISTING TO REMAIN
EA	EXHAUST AIR
EAT	ENTERING AIR TEMPERATURE
EDB	ENTERING DRY BULB
EF	EXHAUST FAN
EFF	EFFICIENCY
EWB	ENTERING WET BULB
EWT	ENTERING WATER TEMPERATURE
°F	DEGREES FAHRENHEIT
F	FILTER
FC	FLEXIBLE CONNECTION (DUCT OR PIPE)
FCU	FAN COIL UNIT
FD	FUSIBLE LINK FIRE DAMPER W/ DUCT ACCESS DOOR
FLR	FLOOR
FLA	FULL LOAD AMPS
FPI	FINS PER INCH
FSD	COMBINATION FIRE AND SMOKE DAMPER
FT	FEET
GPM	GALLONS PER MINUTE
GX	GENERAL EXHAUST
HC	HEATING COIL
HTP	HEAT PUMP
HP	HORSE POWER
HR	HOUR
ID	INSIDE DIMENSION
KW	KILOWATT
KWH	KILOWATT HOURS
LAT	LEAVING AIR TEMPERATURE
LBS	POUNDS
LD	LINEAR DIFFUSER (CEILING, WALL, SILL OR FLOOR)
LRA	LOCK ROTOR AMPS
LWS	LOUVER WITH WIRE SCREEN

ABBREVIATIONS – MECHANICAL

LWT	LEAVING WATER TEMPERATURE
MAT	MIXED AIR TEMPERATURE
MAX	MAXIMUM
MBH	THOUSAND BTU PER HOUR
MFG	MANUFACTURER
MFS	MAXIMUM FUSE SIZE
MIN	MINIMUM
MOCP	MAXIMUM OVERCURRENT PROTECTION
(N)	NEW
NC	NORMALLY CLOSED
NFA	NET FREE AREA
NIC	NOT IN THIS CONTRACT
NK	NECK
NO	NORMALLY OPEN
NTS	NOT TO SCALE
OAI	OUTSIDE AIR INTAKE
OBD	OPPOSED BLADE DAMPER
OD	OUTSIDE DIMENSION
P	PUMP
PD	PRESSURE DROP
PRV	PRESSURE REDUCING VALVE
PSI	POUNDS PER SQUARE INCH (GAUGE)
PSIA	POUNDS PER SQUARE INCH ABSOLUTE
(R)	EXISTING TO BE RELOCATED
RA	RETURN AIR
RF	RETURN FAN
RH	RELATIVE HUMIDITY
RHC	REHEAT COIL
RPM	REVOLUTIONS PER MINUTE
SA	SUPPLY AIR
SAD	SEE ARCHITECTURAL DRAWINGS
SD	SMOKE DAMPER
SF	SUPPLY FAN
SED	SEE ELECTRICAL DRAWINGS
SENS	SENSIBLE
SM	SHEET METAL
SP	STATIC PRESSURE
SQFT	SQUARE FEET
TF	TRANSFER FAN
TRG	TRANSFER GRILLE
TX	TOILET EXHAUST
TYP	TYPICAL
UH	UNIT HEATER
UON	UNLESS OTHERWISE NOTED
VAR	VARIABLE
VAV	VARIABLE AIR VOLUME
VD	VOLUME DAMPER
VFD	VARIABLE FREQUENCY DRIVE
VRV	VARIABLE REFRIGERANT VOLUME
W/	WITH
WB	WET BULB
WG	WATER GAUGE
WMS	WIRE MESH SCREEN
WO–SIZE	WALL OPENING – [SIZE]
(X)	EXISTING TO BE DEMOLISHED
(300)	CUBIC FEET OR AIR PER MINUTE OR GALLONS PER MINUTE

PIPING LEGEND (CONTINUED)

RS	REFRIGERANT SUCTION PIPING
RL	REFRIGERANT LIQUID PIPING
	ARROW INDICATES DIRECTION OF FLOW
	PITCH PIPE DOWN IN DIRECTION OF ARROW
D	DRAIN LINE
	PIPE ANCHOR
	PIPE GUIDE
	FLEXIBLE BALL JOINT EXPANSION COMPENSATOR
	CONCENTRIC REDUCER (INCREASER)
	ECCENTRIC REDUCER (INCREASER)
	UNION
	CAPPED PIPE WITH SHUT–OFF VALVE
	"Y" TYPE STRAINER WITH HOSE END BLOW OFF VALVE
	"Y" TYPE STRAINER
	BASKET TYPE STRAINER
	DUPLEX STRAINER
	ELBOW TURNED UP
	ELBOW TURNED DOWN
	BOTTOM PIPE CONNECTION
	TOP PIPE CONNECTION
	SLOPED CHANGE IN PIPE ELEVATION
	FLEXIBLE CONNECTION
	SHUT–OFF VALVE
	AUTOMATIC FLOW CONTROL VALVE
	CALIBRATED BALANCE VALVE

PIPING LEGEND (CONTINUED)

	GLOBE VALVE
	CHECK VALVE
	AUTOMATIC THREE–WAY CONTROL VALVE
	AUTOMATIC TWO–WAY CONTROL VALVE
	RELIEF VALVE
	ANGLE RELIEF VALVE
	LOCKSHIELD GLOBE VALVE
	SOLENOID VALVE
	BUTTERFLY VALVE (MANUAL)
	BUTTERFLY VALVE (MOTORIZED)
	BALL VALVE
	PUMP
	DIRT POCKET
	VALVE IN VERTICAL
	MANUAL AIR VENT
A	AUTOMATIC AIR VENT
	THERMOMETER
	PIPE SENSOR WELL (THERMOMETER)
	PRESSURE GAUGE AND COCK
	PRESSURE GAUGE WITH LOOP
	TEMPERATURE–PRESSURE TEST FITTING
℄	CENTER LINE
	PIPE SLEEVE
	BEAM PENETRATION
	PIPE GUIDE
	PIPE CAP
	PIPE BLIND FLANGE

DUCTWORK LEGEND

16x6 8x6 16x6 8x6	DUCT SPLIT WITH SPLIT SIZE
	RADIUS ELBOW
	ELBOW WITH TURNING VANES
	RECTANGULAR BRANCH TAKEOFF WITH BALANCING DAMPER
	RECTANGULAR SUPPLY DUCT UP
	RECTANGULAR SUPPLY DUCT DOWN
	RECTANGULAR RETURN OR EXHAUST DUCT UP
	RECTANGULAR RETURN OR EXHAUST DUCT DOWN
	ROUND DUCT, UP
	ROUND DUCT, DOWN
	BEAM PENETRATION
R	SLOPING RISE IN DUCTWORK
D	SLOPING DROP IN DUCTWORK
18x12 18x12	DUCT SIZE (CLEAR INSIDE DIMENSION) FIRST FIGURE INDICATES PLAN SIZE
18ϕ 18ϕ	ROUND DUCT DIAMETER SIZE (CLEAR INSIDE DIMENSION)
18 ⊖ 18 ⊖	OVAL DUCT SIZE
	SIDE, TOP OR BOTTOM DUCT ACCESS DOOR
	ACOUSTIC LINING IN DUCT (DUCT SIZE NOTED INDICATES INSIDE DIMENSIONS)
	RECTANGULAR OR SQUARE TO ROUND OR OVAL TRANSITION
	FLEXIBLE CONNECTION
	DUCT END/CAP
	FLEXIBLE DUCT
	VOLUME DAMPER IN DUCT

DUCTWORK LEGEND (CONTINUED)

	AUTOMATIC CONTROL DAMPER
	FUSIBLE LINK FIRE DAMPER WITH DUCT ACCESS DOOR
	SMOKE DAMPER WITH DUCT ACCESS DOOR
	COMBINATION FIRE AND SMOKE DAMPER WITH DUCT ACCESS DOOR
	BACK DRAFT DAMPER WITH DUCT ACCESS DOOR
	CEILING DIFFUSER: 1–WAY BLOW, 2–WAY BLOW, 3–WAY BLOW, 4–WAY BLOW
	CEILING DIFFUSER WITH FLEXIBLE DUCT CONNECTION
	RETURN/EXHAUST REGISTER OR GRILLE
	RETURN/EXHAUST REGISTER OR GRILLE WITH FLEXIBLE DUCT CONNECTION
	FIRE RATED ENCASED DUCT
	TRANSFER GRILLES ON BOTH SIDES OF PARTITION OR WALL (SIZE)
	LINEAR DIFFUSER WITH PLENUM
SR–A12x8 (200) SR–A12x8 (200)	SUPPLY REGISTER WITH AIR OUTLET DEVICE DESIGNATION
ER–C12x8 (200) ER–C12x8 (200)	RETURN OR EXHAUST REGISTER OR GRILLE WITH AIR INLET DEVICE DESIGNATION

3/27/2013 8:48:32 PM

SAN FRANCISCO OAKLAND BAY BRIDGE
EAST SPAN SEISMIC SAFETY PROJECT

Shahjahan Ali
DESIGN OVERSIGHT
03/27/13
SIGN OFF DATE

	BY	CHECKED
DESIGN	JAMES GRONEK	ROBERT C. NIXDORF
DETAILS	BY	CHECKED
QUANTITIES	BY	CHECKED

PREPARED FOR THE
STATE OF CALIFORNIA
DEPARTMENT OF TRANSPORTATION

KAREN Y. WANG
PROJECT ENGINEER

BRIDGE NO
POST MILES 2.0

IERBYS TEMPORARY IMPROVEMENTS - BUILDING

MECHANICAL LEGEND AND ABBREVIATIONS

SHEET M000

DESIGN DETAIL SHEET (ENGLISH) (REV. 03/14/12)

ORIGINAL SCALE IN INCHES FOR REDUCED PLANS 0 1 2 3

UNIT: 04
PROJECT NUMBER AND PHASE: CONTRACT NO.: 0120F4

DISREGARD PRINTS BEARING EARLIER REVISION DATES

REVISION DATES ___ ___ ___ ___ SHEET 42 OF 66

C:\Users\cschurr\Documents\56185_Gateway Park - Central_cschurr.rvt

DIST	COUNTY	ROUTE	POST MILES TOTAL PROJECT	SHEET No	TOTAL SHEETS
04	ALA	80	2.0	1204av	1204

JRGK
REGISTERED ENGINEER — DATE 03/27/13

PLANS APPROVAL DATE

REGISTERED PROFESSIONAL ENGINEER — JAMES R. GRONEK — No. M 34898 — MECHANICAL — STATE OF CALIFORNIA

The state of California or its officers or agents shall not be responsible for the accuracy or completeness of scanned copies of this plan sheet.

WSP • FLACK + KURTZ
405 HOWARD ST. #500
SAN FRANCISCO, CA 94106

CONTROLS LEGEND

B / B	TOTALIZING BTU METER
E	EMERGENCY BREAK GLASS SWITCH FOR EQUIPMENT SHUT-DOWN
F / F	FLOW MEASURING STATION
	FLOW SWITCH
CM #	CARBON MONOXIDE SENSOR WITH ZONE DESIGNATION
CO #	CARBON DIOXIDE SENSOR WITH ZONE DESIGNATION
T #	TEMPERATURE SENSOR/THERMOSTAT WITH ZONE OR EQUIPMENT DESIGNATION
H #	HUMIDISTAT/HUMIDITY SENSOR WITH HUMIDIFIER DESIGNATION
TH #	COMBINATION TEMPERATURE/HUMIDITY SENSOR
S	DUCT SMOKE DETECTOR SUPPLIED BY ELECTRICAL TRADE, INSTALLED BY MECHANICAL TRADE
P #	STATIC PRESSURE SENSOR WITH DESIGNATION
R #	REFRIGERANT SENSOR WITH DESIGNATION

MISCELLANEOUS

DP	DIFFERENTIAL PRESSURE SENSOR
DP	DIFFERENTIAL PRESSURE SWITCH
	NEW WORK
	EXISTING WORK
	EXISTING WORK TO BE REMOVED
	POINT OF NEW CONNECTION TO EXISTING WORK
	OVAL
Ø	DIAMETER
U	UNDERCUT DOOR
HW / 1	RISER DESIGNATION — RISER SERVICE; RISER NUMBER
2 / M3.1	SECTION DESIGNATION — SECTION NUMBER; DRAWING NUMBER
1 / M2.1	DETAIL DESIGNATION — DETAIL NUMBER; DRAWING NUMBER
CT / 1-1	EQUIPMENT DESIGNATION — EQUIPMENT TYPE; EQUIPMENT FLOOR AND NUMBER
3-24	TERMINAL DESIGNATION — 3-24: THE NUMBER ON THE FLOOR; FLOOR OR LEVEL
CD-1,12x12 (550)	AIR OUTLET/INLET DEVICE DESIGNATION — CD-1,12x12 (550): TYPE; NECK OR FACE SIZE; CFM
LD-A,48x1,8ø (300)	LINEAR DIFFUSER DEVICE DESIGNATION — LD-A,48x1,8ø (300): TYPE; LENGTH & SLOT SIZE; PLENUM INLET SIZE; CFM

GAS-FIRED UNIT HEATER

DESIGNATION	SERVICE / LOCATION	MANUF. MODEL NUMBER	GAS HEATING MBH	GAS HEATING LENGTH	COMBUSTION AIR DUCT	VENT DUCT	VOLTAGE/ PHASE	NOTES
UH-1-1	GALLERY	SCHWANK UHE-90-40	90.0	40'10"	4Ø	4Ø	120/1	1,2,3,4
UH-1-2	GALLERY	SCHWANK UHE-90-40	90.0	40'10"	4Ø	4Ø	120/1	1,2,3,4
UH-1-3	GALLERY	SCHWANK UHE-90-40	90.0	40'10"	4Ø	4Ø	120/1	1,2,3,4
UH-1-4	GALLERY	SCHWANK UHE-90-40	90.0	40'10"	4Ø	4Ø	120/1	1,2,3,4
UH-1-5	GALLERY	SCHWANK UHE-90-40	90.0	40'10"	4Ø	4Ø	120/1	1,2,3,4
UH-1-6	GALLERY	SCHWANK UHE-90-40	90.0	40'10"	4Ø	4Ø	120/1	1,2,3,4

NOTES:
1. PROVIDE MANUFACTURER-RECOMMENDED CLEARANCES TO COMBUSTIBLE MATERIALS.
2. REFER TO MANUFACTURER RECOMMENDATIONS FOR FLUE LENGTH AND FITTING LIMITATIONS.
3. PROVIDE MANUFACTURER-SUPPLIED COMBUSTION AIR AND VENT DUCT TERMINATIONS FOR ABOVE ROOF.
4. MAINTAIN ALL MANUFACTURER-RECOMMENDED CLEARANCES FOR COMBUSTION AIR AND VENT DUCT TERMINATIONS.

AIR INLETS AND OUTLETS

DESIGNATION	TITUS MODEL NUMBER	TYPE OF SERVICE	FACE DIMENSIONS	NOTES
CD-A	ONMI	SUPPLY	12x12	1,2,4
LD-A	FL-HT	SUPPLY	60" LENGTH, 1" SLOT	1,2,3,4
LR-A	FL-HT	RETURN	60" LENGTH, 1" SLOT	2, 3, 5
EG-1	J-FL	RETURN/EXHAUST	16x6	2,4

NOTES:
1. REFER TO DRAWINGS FOR NECK SIZE.
2. CONFIRM BORDER TYPE AND FINISH OF ALL AIR INLETS AND OUTLETS WITH ARCHITECT.
3. PROVIDE MUD-IN LINEAR DIFFUSER BORDER.
4. PROVIDE REMOTE-OPERATED BALANCING DAMPER WITH CONTROL ACCESSIBLE THROUGH THE FACE OF THE DIFFUSER FOR ALL DIFFUSERS LOCATED IN HARD-LID CEILINGS. REFER TO SHEET M401 FOR REMOTE DAMPER DETAIL.
5. PROVIDE INSULATED LIGHTSHIELD FOR ALL LINEAR RETURNS.

FANS

DESIGNATION	LOCATION/ SERVICE	TYPE	CFM	STATIC PRESSURE (IN. WG.)	RPM	MOTOR HP / WATTS	MOTOR VOLTAGE/ PHASE	OPERATING WEIGHT (LBS)	SONES	VAR. SPEED (Y/N)	NOTES
SF-1-1	VENTILATION	CABINET	405	0.4	1,250	305 W	120/1	36	3	Y	1,2,3,4
EF-1-1	TOILET EXHAUST	CABINET	400	0.25	1,070	217 W	120/1	36	2	Y	1,2,3
EF-1-2	TOILET EXHAUST	CABINET	400	0.25	1,070	217 W	120/1	36	2	Y	1,2,3

NOTES:
1. REFER TO SUSPENDED EQUIPMENT SUPPORT DETAIL ON M401.
2. UNIT TO BE PROVIDED WITH DISCONECT BY DIV. 26.
3. PROVIDE SINGLE-PHASE SPEED CONTROLLER FOR BALANCING PURPOSES.
4. PROVIDE FAN WITH INTEGRAL MERV-8 FILTER.

VARIABLE REFRIGERANT VOLUME INDOOR DX FAN COIL

DESIGNATION	MODEL NUMBER	LOCATION	CFM	MIN OA CFM	ESP (IN. WG.)	COOLING CAPACITY TOTAL MBH	COOLING CAPACITY SENSIBLE MBH	COOLING EAT DB (°F)	COOLING EAT WB (°F)	HEATING MODE SENSIBLE CAPACITY (BTU/H)	HEATING MODE EAT DB (°F)	ELECTRICAL DATA VOLTAGE/ PHASE	ELECTRICAL DATA MCA	ASSOCIATED CONDENSING UNIT	NOTES
FCU-1-1	–	SOUTH BAR	1380	0	0.2	44	43	76.2	60.3	56,630	65.8	208 / 1	3.4	CU-1-1	1,2,3,4
FCU-1-2	–	SOUTH BAR	1380	0	0.2	44	43	76.2	60.3	56,630	65.8	208 / 1	3.4	CU-1-1	1,2,3,4
FCU-1-3	–	SOUTH BAR	1380	0	0.2	44	43	76.2	60.3	56,630	65.8	208 / 1	3.4	CU-1-1	1,2,3,4

NOTES:
1. DUCTED CONCEALED UNIT TYPE.
2. PROVIDE UNIT WITH INTEGRAL CONDENSATE PUMP.
3. UNIT-MOUNTED DISCONNECT.
4. PROVIDE ACCESS PANELS IN HARD-LID CEILING FOR ADEQUATE MAINTENANCE ACCESS TO UNIT, IN ACCORDANCE WITH MANUFACTURER RECOMMENDATIONS.

VARIABLE REFRIGERANT VOLUME AIR-COOLED CONDENSING UNIT

DESIGNATION	TYPE	CAPACITY TOTAL MBH	CAPACITY SENSIBLE MBH	AIR COOLED CONDENSER OADB (°F)	AIR COOLED CONDENSER OAWB (°F)	AIR COOLED CONDENSER CFM	AIR COOLED CONDENSER PD (IN W.G.)	ELECTRICAL DATA VOLTAGE/ PHASE	ELECTRICAL DATA MCA	ELECTRICAL DATA MAX FUZE AMPS	OPERATING WEIGHT (LBS)	NOTES
CU-1-1	HEAT PUMP	160	–	84	70	6,530	–	208 / 3	36.1 + 36.1	50 + 50	560 + 560	1, 2, 3

NOTES:
1. PROVIDE WITH R-410A REFRIGERANT.
2. CONDENSING UNIT CONSISTS OF TWO AIR COOLED CONDENSER MODULES. COORDINATE 2 POINTS OF ELECTRICAL CONNECTION WITH ELECTRICAL CONTRACTOR.
3. UNIT-MOUNTED DISCONNECT.

SAN FRANCISCO OAKLAND BAY BRIDGE
EAST SPAN SEISMIC SAFETY PROJECT

IERBYS TEMPORARY IMPROVEMENTS - BUILDING

MECHANICAL SCHEDULES

SHEET M001

Shahjahan Ali
DESIGN OVERSIGHT
03/27/13
SIGN OFF DATE

	BY	CHECKED
DESIGN	JAMES GRONEK	ROBERT C. NIXDORF
DETAILS	BY	CHECKED
QUANTITIES	BY	CHECKED

PREPARED FOR THE
STATE OF CALIFORNIA
DEPARTMENT OF TRANSPORTATION

KAREN Y. WANG
PROJECT ENGINEER

BRIDGE NO
POST MILES 2.0

DESIGN DETAIL SHEET (ENGLISH) (REV. 03/14/12)

ORIGINAL SCALE IN INCHES FOR REDUCED PLANS 0 1 2 3

UNIT: 04
PROJECT NUMBER AND PHASE: CONTRACT NO.: 0120F4

DISREGARD PRINTS BEARING EARLIER REVISION DATES

REVISION DATES				SHEET	OF
___	___	___	___	43	66

C:\Users\cschurr\Documents\56185_Gateway Park - Central_cschurr.rvt

3/27/2013 8:48:39 PM

DIST	COUNTY	ROUTE	POST MILES TOTAL PROJECT	SHEET No	TOTAL SHEETS
04	ALA	80	2.0	1204aw	1204

JRGK
REGISTERED ENGINEER — 03/27/13 DATE

PLANS APPROVAL DATE

REGISTERED PROFESSIONAL ENGINEER — JAMES R. GRONEK — No. M 34898 — MECHANICAL — STATE OF CALIFORNIA

The state of California or its officers or agents shall not be responsible for the accuracy or completeness of scanned copies of this plan sheet.

WSP • FLACK + KURTZ
405 HOWARD ST. #500
SAN FRANCISCO, CA 94106

CERTIFICATE OF COMPLIANCE and FIELD INSPECTION ENERGY CHECKLIST (Part 2 of 5) MECH-1-C

PROJECT NAME: IERBYS TEMPORARY IMPROVEMENTS — DATE: 02.21.2013

Discrepancies:

2008 Nonresidential Compliance Forms — *March 2010*

CERTIFICATE OF COMPLIANCE and FIELD INSPECTION ENERGY CHECKLIST (Part 1 of 5) MECH-1-C

PROJECT NAME: IERBYS TEMPORARY IMPROVEMENTS — DATE: 02.22.2013 — CLIMATE ZONE: 3

PROJECT ADDRESS: 210 BURMA ROAD, OAKLAND — CONDITIONED FLOOR AREA: 2,905 SF

GENERAL INFORMATION

BUILDING TYPE: [X] NONRESIDENTIAL [ ] HIGH RISE RESIDENTIAL [ ] HOTEL/MOTEL GUEST ROOM
[ ] SCHOOLS (Public School) [ ] RELOCATABLE PUBLIC SCHOOL BLDG. [ ] CONDITIONED SPACES [ ] UNCONDITIONED SPACES

PHASE OF CONSTRUCTION: [ ] NEW CONSTRUCTION [ ] ADDITION [X] ALTERATION

APPROACH OF COMPLIANCE: [X] COMPONENT [ ] OVERALL ENVELOPE TDV ENERGY [ ] UNCONDITIONED (file affidavit)

FRONT ORIENTATION: N, E, S, W or in Degrees: N

HVAC SYSTEM DETAILS		FIELD INSPECTION ENERGY CHECKLIST		
		Meets Criteria or Requirements		
EQUIPMENT[2]	INSPECTION CRITERIA	Special Feature[1]	Pass	Fail-Describe Reason[3]
Item or System Tags (i.e. AC-1, RTU-1, HP-1)	CU-1-1	[ ]	[ ]	[ ]
Equipment type[4]:	SPLIT VRV	[ ]	[ ]	[ ]
No of systems	1	[ ]	[ ]	[ ]
Max Allowed Heating Capacity	N/A	[ ]	[ ]	[ ]
Minimum Heating Efficiency	3.3 COP	[ ]	[ ]	[ ]
Max Allowed Cooling Capacity	240 MBH	[ ]	[ ]	[ ]
Cooling Efficiency	20 EER	[ ]	[ ]	[ ]
Duct Location/ R-Value	CEILING/R-4.2	[ ]	[ ]	[ ]
Duct Leakage Testing- If Yes, a MECH-4A must be submitted	YES	[ ]	[ ]	[ ]
Economizer	NO	[ ]	[ ]	[ ]
Thermostat	YES	[ ]	[ ]	[ ]
Fan Control	LOCAL 3 SPEED	[ ]	[ ]	[ ]

		FIELD INSPECTION ENERGY CHECKLIST		
EQUIPMENT[2]	INSPECTION CRITERIA	Special Feature[1]	Pass	Fail-Describe Reason[3]
Item or System Tags (i.e. AC-1, RTU-1, HP-1)		[ ]	[ ]	[ ]
Equipment type[4]:		[ ]	[ ]	[ ]
No of systems		[ ]	[ ]	[ ]
Max Allowed Heating Capacity		[ ]	[ ]	[ ]
Minimum Heating Efficiency		[ ]	[ ]	[ ]
Max Allowed Cooling Capacity		[ ]	[ ]	[ ]
Cooling Efficiency		[ ]	[ ]	[ ]
Duct Location/ R-Value		[ ]	[ ]	[ ]
Duct Leakage Testing- If Yes, a MECH-4A must be submitted		[ ]	[ ]	[ ]
Economizer		[ ]	[ ]	[ ]
Thermostat		[ ]	[ ]	[ ]
Fan Control		[ ]	[ ]	[ ]

1. Indicate special feature DETAILS on page 2 of the Inspection Checklist Form.
2. If the Actual installed equipment performance efficiency and capacity is less than the Proposed (from the energy compliance submittal or from the building plans) the responsible party shall resubmit energy compliance to include the new changes.
3. For additional detailed discrepancy use Page 2 of the Inspection Checklist Form.
4. Indicate Equipment Type: Gas (Pkg or Split), VAV, HP (Pkg or Split), Hydronic, PTAC, or other.

2008 Nonresidential Compliance Forms — *March 2010*

CERTIFICATE OF COMPLIANCE and FIELD INSPECTION ENERGY CHECKLIST (Part 5 of 5) MECH-1-C

PROJECT NAME: IERBYS TEMPORARY IMPROVEMENTS — DATE: 02.22.2013

DOCUMENTATION AUTHOR'S DECLARATION STATEMENT

- I certify that this Certificate of Compliance documentation is accurate and complete.

NAME: JAMES R. GRONEK — SIGNATURE: James R. Gronek
COMPANY: WSP FLACK + KURTZ — DATE: 02.22.2013
ADDRESS: 405 HOWARD STREET, SUITE 500 — If Applicable CEA # – CEPE # –
CITY/STATE/ZIP: SAN FRANCISCO, CA 94105 — PHONE: (415) 398-3833

PRINCIPAL MECHANICAL DESIGNER'S DECLARATION STATEMENT

- I am eligible under Division 3 of the California Business and Professions Code to accept responsibility for the mechanical design.
- This Certificate of Compliance identifies the mechanical features and performance specifications required for compliance with Title 24, Parts 1 and 6 of the California Code of Regulations.
- The design features represented of this Certificate of Compliance are consistent with the information provided to document this design on the other applicable compliance forms, worksheets, calculations, plans and specifications submitted to the enforcement agency for approval with this building permit application.

NAME: JAMES R. GRONEK — SIGNATURE: James R. Gronek
COMPANY: WSP FLACK + KURTZ — DATE: 02.22.2013
ADDRESS: 405 HOWARD STREET, SUITE 500 — LICENSE: M34898
CITY/STATE/ZIP: SAN FRANCISCO, CA 94105 — PHONE: (415) 398-3833

MANDATORY MEASURES

Indicate location on building plans of Note Block for Mandatory Measures: M004

MECHANICAL COMPLIANCE FORMS & WORKSHEETS (check box if worksheet is included)

For detailed instructions on the use of this and all Energy Efficiency Standards compliance forms, refer to the 2008 Nonresidential Manual.
Note: The Enforcement Agency may require all forms to be incorporated onto the building plans.

[X]	MECH-1C	Certificate of Compliance. Required on plans for all submittals.
[X]	MECH-2C	Mechanical Equipment Summary is required for all submittals.
[X]	MECH-3C	Mechanical Ventilation and Reheat is required for all submittals with mechanical ventilation.
[X]	MECH-4C	Fan Power Consumption is required when for all prescriptive submittals.

2008 Nonresidential Compliance Forms — *August 2009*

3/27/2013 8:48:51 PM

SAN FRANCISCO OAKLAND BAY BRIDGE EAST SPAN SEISMIC SAFETY PROJECT

Shahjahan Ali
DESIGN OVERSIGHT
03/27/13
SIGN OFF DATE

	BY	CHECKED
DESIGN	JAMES GRONEK	ROBERT C. NIXDORF
DETAILS	BY	CHECKED
QUANTITIES	BY	CHECKED

PREPARED FOR THE STATE OF CALIFORNIA DEPARTMENT OF TRANSPORTATION

KAREN Y. WANG
PROJECT ENGINEER

BRIDGE NO
POST MILES 2.0

IERBYS TEMPORARY IMPROVEMENTS - BUILDING
MECHANICAL TITLE 24

SHEET M002

DESIGN DETAIL SHEET (ENGLISH) (REV. 03/14/12)

ORIGINAL SCALE IN INCHES FOR REDUCED PLANS 0 1 2 3

UNIT: 04
PROJECT NUMBER AND PHASE:
CONTRACT NO.: 0120F4

DISREGARD PRINTS BEARING EARLIER REVISION DATES

REVISION DATES ___ ___ ___ ___

SHEET 44 OF 66

C:\Users\cschurr\Documents\56185_Gateway Park - Central_cschurr.rvt

DIST	COUNTY	ROUTE	POST MILES TOTAL PROJECT	SHEET No	TOTAL SHEETS
04	ALA	80	2.0	1204ax	1204

JRGK
REGISTERED ENGINEER

03/27/13
DATE

REGISTERED PROFESSIONAL ENGINEER JAMES R. GRONEK No. M 34898 MECHANICAL STATE OF CALIFORNIA

PLANS APPROVAL DATE

The state of California or its officers or agents shall not be responsible for the accuracy or completeness of scanned copies of this plan sheet.

WSP • FLACK + KURTZ
405 HOWARD ST. #500
SAN FRANCISCO, CA 94106

CERTIFICATE OF COMPLIANCE and FIELD INSPECTION ENERGY CHECKLIST (Part 4 of 5) MECH-1-C

PROJECT NAME: IERBYS TEMPORARY IMPROVEMENTS
DATE: 02.22.2013

Test Description		MECH-12A	MECH-13A	MECH-14A	MECH-15A	
Equipment Requiring Testing	# of units	Fault Detection & Diagnostics for DX Units	Automatic Fault Detection & Diagnostics for Air & Zone	Distributed Energy Storage DX AC Systems	Thermal Energy Storage (TES) Systems	Test Performed By:
CU-R-1 AND ASSOCIATED FCUs	4	☒	☐	☐	☐	MECHANICAL CONTRACTOR
		☐	☐	☐	☐	
		☐	☐	☐	☐	
		☐	☐	☐	☐	
		☐	☐	☐	☐	
		☐	☐	☐	☐	
		☐	☐	☐	☐	
		☐	☐	☐	☐	
		☐	☐	☐	☐	
		☐	☐	☐	☐	
		☐	☐	☐	☐	
		☐	☐	☐	☐	
		☐	☐	☐	☐	
		☐	☐	☐	☐	
		☐	☐	☐	☐	
		☐	☐	☐	☐	
		☐	☐	☐	☐	
		☐	☐	☐	☐	
		☐	☐	☐	☐	
		☐	☐	☐	☐	
		☐	☐	☐	☐	
		☐	☐	☐	☐	
		☐	☐	☐	☐	
		☐	☐	☐	☐	
		☐	☐	☐	☐	
		☐	☐	☐	☐	
		☐	☐	☐	☐	
		☐	☐	☐	☐	

CERTIFICATE OF COMPLIANCE and FIELD INSPECTION ENERGY CHECKLIST (Part 3 of 5) MECH-1-C

PROJECT NAME: IERBYS TEMPORARY IMPROVEMENTS
DATE: 02.22.2013

Required Acceptance Tests

DESIGNER: WSP FLACK+KURTZ

This form is to be used by the designer and attached to the plans. Listed below are all the acceptance tests for mechanical systems. The designer is required to check the applicable boxes by all acceptance tests that apply and list all equipment that requires an acceptance test. If all equipment of a certain type requires a test, list the equipment description and the number of systems. The NA number designates the Section in the Appendix of the Nonresidential Reference Appendices Manual that describes the test. Since this form will be part of the plans, completion of this section will allow the responsible party to budget for the score of work appropriately.

ENFORCEMENT AGENCY: CITY OF OAKLAND

SYSTEM ACCEPTANCE. Before occupancy permit is granted for a newly constructed building or space, or a new space-conditioning system serving a building or space is operated for normal use, all control devices serving the building or space shall be certified as meeting the Acceptance Requirements for Code Compliance.
SYSTEM ACCEPTANCE. Before occupancy permit is granted. All newly installed HVAC equipment must be tested using the Acceptance Requirements.

The MECH-1C form is not considered a completed form and is not to be accepted by the building department unless the correct boxes are checked. The equipment requiring testing, person performing the test (Example: HVAC Installer, TAB contractor, controls contractor, PE in charge of project) and what Acceptance test must be conducted. The following checked-off forms are required for ALL newly installed equipment. In addition a Certificate of Acceptance forms shall be submitted to the building department that certifies plans, specifications, installation certificates, and operating and maintenance information meet the requirements of §10-103(b) and Title 24 Part 6. The building inspector must receive the properly filled out and signed forms before the building can receive final occupancy.

Test Description		MECH-2A	MECH-3A	MECH-4A	MECH-5A	MECH-6A	MECH-7A	MECH-8A	MECH-9A	MECH-10A	MECH-11A
Equipment Requiring Testing or Verification	# of units	Outdoor Ventilation for VAV & CAV	Constant Volume & Single-Zone Unitary	Air Distribution Ducts	Economizer Controls	Demand Control Ventilation DCV	Supply Fan VAV	Valve Leakage Test	Supply Water Temp. Reset	Hydronic System Variable Flow Control	Automatic Demand Shed Control
CU-R-1 AND ASSOCIATED FCUs	4	☒	☐	☒	☐	☐	☐	☐	☐	☐	☐
		☐	☐	☐	☐	☐	☐	☐	☐	☐	☐
		☐	☐	☐	☐	☐	☐	☐	☐	☐	☐
		☐	☐	☐	☐	☐	☐	☐	☐	☐	☐
		☐	☐	☐	☐	☐	☐	☐	☐	☐	☐
		☐	☐	☐	☐	☐	☐	☐	☐	☐	☐
		☐	☐	☐	☐	☐	☐	☐	☐	☐	☐
		☐	☐	☐	☐	☐	☐	☐	☐	☐	☐
		☐	☐	☐	☐	☐	☐	☐	☐	☐	☐
		☐	☐	☐	☐	☐	☐	☐	☐	☐	☐

AIR SYSTEM REQUIREMENTS (Part 1 of 3) MECH-2-C

PROJECT NAME: IERBYS TEMPORARY IMPROVEMENTS
DATE: 02.22.2013

Item or System Tags (i.e. AC-1, RTU-1, HP-1, CT-1, etc...)		CU-1-1 AND FCUs					
No. of Systems		1					
		Indicate Air Systems Type (Central, Single Zone, Package, VAV or etc...)					
MANDATORY MEASURES	*T-24 Sections*	*Indicate Page Reference on the Plans or Schedule list or list Information below*					
Heating Equipment Efficiency	112(a)	3.5 COP					
Cooling Equipment Efficiency	112(a)	20 EER					
HVAC or Heat Pump Thermostats	112(b), 112(c)	YES					
Furnace Controls/Thermostat	112(c), 115(a)	N/A					
Natural Ventilation	121(b)	NO					
Mechanical Ventilation	121(b)	YES					
VAV Minimum Position Control	121(c)	N/A					
Demand Control Ventilation	121(c)	N/A					
Time Control	122(e)	YES					
Setback and Setup Control	122(e)	N/A					
Outdoor Damper Control	122(f)	YES					
Isolation Zones	122(g)	N/A					
Pipe Insulation	123	YES					
Duct Insulation	124	YES					
PRESCRIPTIVE MEASURES							
Calculated Design Heating Load	144(a & b)	165 MBH					
Calculated Design Cooling Load	144(a & b)	132 MBH					
Fan Control	144(c)	3 SPEED					
DP Sensor Location	144(c)	N/A					
Supply Pressure Reset (DDC only)	144(c)	N/A					
Simulatsneous Heat/Cool	144(d)	NO					
Economizer	144(e)	N/A					
Heat and Cool Air Supply Reset	144(f)	N/A					
Electric Resistance Heating [1]	144(g)	NO					
Heat Rejection System	144(h)	AIR COOLED					
Air Cooled Chiller Limitation	144(i)	N/A					
Duct Leakage Sealing. If Yes, a **MECH-4-A** must be submitted	144(k)	YES					

1. Total installed capacity (MBtu/hr) of all electric heat on this project exclusive of electric auxiliary heat for heat pumps. If electric heat is used explain which exception(s) to §144(g) apply.

MECHANICAL VENTILATION AND REHEAT MECH-3-C

PROJECT NAME: IERBYS TEMPORARY IMPROVEMENTS
DATE: 02.22.2013

MECHANICAL VENTILATION (§121(b)2)									REHEAT LIMITATION (§144(d))				
AREA BASIS				OCCUPANCY BASIS					VAV MINIMUM				
A	B	C	D	E	F	G	H	I	J	K	L	M	N
Zone/ System	Condition Area (ft²)	CFM per ft²	Min CFM by Area B x C	Num of People	CFM per Person	Min CFM by Occupant E x F	REQ'D V.A. Max of D or G	Design Ventilation Air cfm	50% of Design Zone Supply cfm	B x 0.4 cfm/ft²	Max of Columns H,J,K, or 300 cfm	Design Minimum Air setpoint	Transfer Air
FCU-1-1	652	0.15	98	4	15	60	98	135					
FCU-1-2	677	0.15	102	4	15	60	102	135					
FCU-1-3	864	0.15	130	8	15	120	130	135					
Totals				16			330	405	Column I Total Design Ventilation Air				

C	Minimum ventilation rate per Section §121, Table 121-A
E	Based on fixed seat or the greater of the expected number of occupants and 50% of the CBC occupant load for egress purposes for spaces without fixed seating.
H	Required Ventilation Air (REQ'D V.A.) is the larger of the ventilation rates calculated on an AREA BASIS or OCCUPANCY BASIS (Column D or G).
I	Must be greater than or equal to H, or use Transfer Air (column N) to make up the difference
J	Design fan supply cfm (Fan CFM) x 50%; or the design zone outdoor airflow rate per §121
K	Condition area (ft²) x 0.4 cfm/ft²; or
L	Maximum of Columns H,,J,K, or 300 cfm
M	This must be less than or equal to Column L and greater than or equal to the sum of Columns H plus N.
N	Transfer Air must be provided where the Required ventilation Air (Column I) is greater than the Design Minimum Air (Column M). Where required, transfer air must be greater than or equal to the difference between the Required Ventilation Air (Column H) and the Design Minimum Air (Column I), Column H minus M.

SERVICE HOT WATER & POOL/SPA REQUIREMENTS (Part 3 of 3) MECH-2-C

PROJECT NAME: IERBYS TEMPORARY IMPROVEMENTS
DATE: 02.22.2013

Item or System Tags (i.e. WH-1, WHP, DHW, etc...) [1]		EWH-1 AND EWH-2					
No. of Systems		2					
		Indicate Page Reference on Plans or Schedule [2]					
MANDATORY MEASURES	*T-24 Sections*						
SERVICE HOT WATER							
Certified Water Heater	§111, §113(a)	YES					
Water Heater Efficiency	§113(b)	98%					
Service Water Heating Installation	§113(c)	YES					
Pipe Installation	§123	YES					
POOL AND SPA							
Pool and Spa Efficiency and Control	§114(a)						
	§114(b)						
Pool and Spa Electric Resistance Heating	Exception						
Pool and Spa Installation	§114(b)						
Pool Heater - No Pilot Light	§115(c)						
Spa Heater - No Pilot Light	§115(d)						
Pipe Installation	§123						

1. The Proposed equipment need to match the building plans schedule or specifications. If a requirement is not applicable, put "N/A" in the column next to the measure.
2. For each water heater, pool heat and domestic water loop (or groups of similar equipment) fill in the reference to sheet number and/or specification section and paragraph number where the required features are documented. If a requirement is not applicable, put "N/A" in the column.

WATER SIDE SYSTEM REQUIREMENTS (Part 2 of 3) MECH-2-C

PROJECT NAME: IERBYS TEMPORARY IMPROVEMENTS
DATE: 02.22.2013

Item or System Tags (i.e. AC-1, RTU-1, HP-1, CT-1, etc...) [1]							
No. of Systems							
		WATER[2] SIDE SYSTEMS: Chillers, Towers, Boilers, Hydronic Loops					
MANDATORY MEASURES	*T-24 Sections*	*Indicate Page Reference on Plans or Specification* [2]					
Equipment Efficiency	112(a)						
Pipe Insulation	123						
PRESCRIPTIVE MEASURES							
Cooling Tower Fan Controls	144(h)	**N/A - NO NEW WATER SIDE SYSTEMS**					
Cooling Tower Flow Controls	144(h)						
Variable Flow System Design	144(i)						
Chiller and Boiler Isolation	144(i)						
CHW and HHW Reset Controls	144(i)						
WLHP Isolation Valves	144(i)						
VSD on CHW, CW & WLHP Pumps > 5HP	144(i)						
DP Sensor Location	144(j)						

1. The Proposed equipment need to match the building plans schedule or specifications. If a requirement is not applicable, put "N/A" in the column next to applicable section.
2. For each chiller, cooling tower, boiler, and hydronic loop (or groups of similar equipment) fill in the reference to sheet number and/or specification section and paragraph number where the required features are documented. If a requirement is not applicable, put "N/A" in the column next to applicable section.

3/27/2013 8:48:59 PM

Shahjahan Ali
DESIGN OVERSIGHT

03/27/13
SIGN OFF DATE

DESIGN DETAIL SHEET (ENGLISH) (REV. 03/14/12)

	BY	CHECKED
DESIGN	JAMES GRONEK	ROBERT C. NIXDORF
DETAILS	BY	CHECKED
QUANTITIES	BY	CHECKED

ORIGINAL SCALE IN INCHES FOR REDUCED PLANS 0 1 2 3

PREPARED FOR THE
STATE OF CALIFORNIA
DEPARTMENT OF TRANSPORTATION

KAREN Y. WANG
PROJECT ENGINEER

BRIDGE NO
POST MILES 2.0

UNIT: 04
PROJECT NUMBER AND PHASE:
CONTRACT NO.: 0120F4

DISREGARD PRINTS BEARING EARLIER REVISION DATES

SAN FRANCISCO OAKLAND BAY BRIDGE
EAST SPAN SEISMIC SAFETY PROJECT

IERBYS TEMPORARY IMPROVEMENTS - BUILDING

MECHANICAL TITLE 24

SHEET M003

REVISION DATES				SHEET	OF
___	___	___	___	45	66

C:\Users\cschurr\Documents\56185_Gateway Park - Central_cschurr.rvt

DIST	COUNTY	ROUTE	POST MILES TOTAL PROJECT	SHEET No	TOTAL SHEETS
04	ALA	80	2.0	1204ay	1204

JRGK
REGISTERED ENGINEER — DATE 03/27/13

PLANS APPROVAL DATE

REGISTERED PROFESSIONAL ENGINEER — JAMES R. GRONEK — No. M 34898 — MECHANICAL — STATE OF CALIFORNIA

The state of California or its officers or agents shall not be responsible for the accuracy or completeness of scanned copies of this plan sheet.

WSP • FLACK + KURTZ
405 HOWARD ST. #500
SAN FRANCISCO, CA 94106

FAN POWER CONSUMPTION — MECH-4-C

PROJECT NAME: IERBYS TEMPORARY IMPROVEMENTS — DATE: 02.22.2013

NOTE: Provide one copy of this worksheet for each fan system with a total fan system horsepower greater than 25 hp for Constant Air Volume (CAV) Fan Systems or Variable Air Volume (VAV) Systems when using the Prescriptive Approach. See Power Consumption of fans §144 (c)

A	B	C	D	E	F
FAN DESCRIPTION	DESIGN BRAKE HP	EFFICIENCY		NUMBER OF FANS	PEAK WATTS B x E x 746 / (C x D)
		MOTOR	DRIVE		
N/A - NO NEW FANS > 25HP					

Totals and Adjustments			
FILTER PRESSURE ADJUSTMENT Equation 144-A in §144 (c) of the Energy Standards.	1) TOTAL FAN SYSTEM POWER (WATTS, SUM COLUMN F)		
	2) SUPPLY DESIGN AIRFLOW (CFM)		
A) If filter pressure drop (SP_f) is greater than 1 inch W.C. or 245 Pascal then enter SP_f on line 4. Enter Total Fan pressure drop across the fan (SP_t) on Line 5.	3) TOTAL FAN SYSTEM POWER INDEX (Row 1 / Row 2) [1]		W/CFM
	4) SP_f		
B) Calculate Fan Adjustment and enter on line 6.	5) SP_t		
C) Calculate Adjusted Fan Power Index and enter on Row 7	6) Fan Adjustment = 1-(SP_f -1)/SP_t		
	7) ADJUSTED FAN POWER INDEX (Line 3 x Line 6) [1]		W/CFM

1. TOTAL FAN SYSTEM POWER INDEX or ADJUSTED FAN POWER INDEX must not exceed 0.8 w/cfm for Constant Volume systems or 1.25 w/cfm for VAV systems.

MECHANICAL MANDATORY MEASURES

Controls (§122)

- [ ] Heat pumps with supplementary electric resistance heaters; should prevent supplementary heater operation when the heating load can be met by the heat pump alone; and
- [ ] In which the cut-on temperature for compression heating is higher then the cut-on temperature for supplementary heating, and the cut-off temperature for compression heating is higher than the cut-off temperature for supplementary heating.
- [X] Thermostats. All unitary heating and/or cooling systems heat pumps that are not controlled by a central energy management control system (ECMS) shall have a setback thermostat.
- [ ] Thermostatic Controls for Each Zone. The supply of heating and cooling energy to each space-conditioning zone or dwelling unit shall be controlled by an individual thermostatic control that responds to temperature within the zone and that meets the applicable requirements of Section 122(b).
- [X] Criteria for Zonal Thermostatic Controls. The individual thermostatic controls required by Section 122(a) shall meet requirements; for heating shall be capable of being set, locally or remotely, down to 55°F or lower. Or for cooling it shall be capable of being set, locally or remotely, up to 85°F or higher.
- [ ] For Hotel/Motel Guest Room and High-rise Residential Dwelling Unit Thermostats; shall have: Numeric temperature setpoints in °F; and Setpoint stops accessible only to authorized personnel, to restrict over-heating and over cooling and meet Section 150(i).
- [ ] Heat Pump Controls. All heat pumps with supplementary electric resistance heaters shall be installed with controls that comply with Section 112(b).
- [X] Shut-off and Reset Controls for Space-conditioning Systems; shall be installed with controls that comply with controls capable of automatically shutting off the system during periods of nonuse and shall have by having an automatic time switch control device and accessible manual override that allow operation of the system for up to 4 hours.
- [X] Dampers for Air Supply and Exhaust Equipment. Outdoor air supply and exhaust equipment shall be installed with dampers that automatically close upon fan shutdown.
- [ ] Isolation Area Devices. Each space-conditioning system serving multiple zones with a combined conditioned floor area of more than 25,000 square feet shall be designed, installed, and controlled to serve isolation areas.
- [ ] Automatic Design Shed Controls. HVAC systems with DDC to the Zone level shall be programmed to allow centralized demand shed for non-critical zones.

Pipe Insulation (§123)

- [X] The piping for all space-conditioning and service water-heating systems with fluid temperatures listed in TABLE 123-A shall install the amount of insulation specified.

Duct Construction and Insulation (§124)

- [X] All air distribution system ducts and plenums, including, but not limited to, building cavities, mechanical closets, air-handler boxes and support platforms used as ducts or plenums, shall be installed, sealed and insulated to meet the requirements of the 2007 CMC Sections 601, 602, 603, 604, 605 and Standard 6-5.

Acceptance Tests (§125 and Reference Nonresidential Appendix NA7)

- [X] Before an occupancy permit is granted the Certificate of Acceptance shall be submitted to the enforcement agency that certifies that the equipment and systems meet the acceptance requirements.

Refrigerated Warehouses (§126)

- [ ] A refrigerated warehouse with total cold storage and frozen storage area of 3,000 square feet or larger shall meet the insulation requirements for refrigerated warehouses listed on the R-values in Table 126-A.
- [ ] Underslab heating. Electric resistance heat shall not be used for the purposes of underslab heating.
- [ ] Evaporators. Fan-powered evaporators used in coolers and freezers shall conform to a single phase fan motors less than 1 hp and less than 460 Volts shall be electronically commutated motors. In addition the Evaporator fans shall be variable speed and the speed shall be controlled in response to space conditions.
- [ ] Condensers. Fan-powered condensers for system utilizing ammonia shall be evaporatively cooled. Condensing temperatures for evaporative condensers under design conditions, including but not limited to condensers served by cooling towers shall be less than or equal to the design wetbulb temperature:
  - plus 20°F in locations where the design wetbulb temperature is less than or equal to 76°F,
  - plus 19°F in locations where the design wetbulb temperature is between 76°F and 78°F, or
  - plus 18°F in locations where the design wetbulb temperature is greater than or equal to 78°F.
- [ ] Compressors. Compressor systems utilized in refrigerated warehouses shall conform to compressors designed to operate at a minimum condensing temperature of 70°F or less. The compressor speed of a screw compressor greater than 50 hp shall be controllable in response to the refrigeration load or the input power to the compressor shall be controlled to be less than or equal to 60% of full load input power when operated at 50% of full refrigeration capacity.

MECHANICAL MANDATORY MEASURES

Certification of Equipment Efficiency (§110 and §111)

- [X] Any appliance for which there is a California standard established in the Appliance Efficiency Regulations may be installed only if the manufacturer has certified to the Commission, as specified in those regulations, that the appliance complies with the applicable standard for that appliance. For certified appliances, go to www.energy.ca.gov/appliances/database

HVAC equipment efficiencies (§112)

- [X] Mechanical equipment installed in a building subject to these regulations must be certified as meeting certain minimum efficiency. These requirements are contained in §112. The AFUE, COP, EER, IPLV, combustion efficiency values of all equipment must be determined using the applicable test method specified in the Standards.
- [X] The following space-conditioning equipment may be installed only if the manufacturer has certified that the equipment meets or exceeds all applicable efficiency requirements of the Standards: all air conditioners, heat pumps and condensing units >135,000 Btu/hr; all water chillers;
- [N/A] All gas and oil fired furnaces with input rating >225,000 Btu/hr shall have an intermittent ignition or interrupted device (IDD), and have either power venting or a flue damper.

Service Water Heating (§111 and §113)

- [X] Certification by Manufacturers. Any service water-heating system or equipment may be installed only if the manufacturer has certified that the system or equipment complies with all of the requirements of this subsection for that system or equipment.
- [ ] Outlet temperature controls. On systems that have a total capacity greater than 167,000 Btu/hr, outlets that require higher than service water temperatures as listed in the ASHRAE Handbook, Applications Volume, shall have separate remote heaters, heat exchangers, or boosters to supply the outlet with the higher temperature.
- [ ] Controls for hot water distribution systems. Service hot water systems with circulating pumps or with electrical heat trace systems shall be capable of automatically turning off the system.
- [X] Insulation. Unfired service water heater storage tanks and backup tanks for solar water-heating systems shall have; External insulation with an installed R-value of at least R-12; or internal and external insulation with with a combined R-value of at least R-16; or the heat loss of the tank surface based on an 80° F water-air temperature difference shall be less than 6.5 Btu/hr per square foot.
- [ ] Water Heating Recirculation Loops Serving Multiple Dwelling Units, High-Rise Residential, Hotel/Motel and Nonresidential as listed on §113(c)5A, B, C, D, E, F.
- [ ] Service water heaters in state buildings. Any newly constructed building constructed by the State shall derive its service water heating from a system that provides at least 60% of the energy needed for service water heating from site solar energy or recovered energy.

Pool and Spas
Service Water Heating and Pool Heating Measures (§114)

- [ ] Any pool or spa heating system or equipment may be installed only if the manufacturer has certified that the system or equipment has all of following:
  - Efficiency,
  - On-off switch instructions. A permanent, easily readable and weatherproof plate or card that gives instruction for the energy efficient operation of the pool or spa heater and for the proper care of pool or spa water when a cover is used.
  - No electric resistance heating.
- [ ] Installation of any pool or spa system or equipment shall be installed with at least 36" of pipe shall be installed between the filter and the heater or dedicated suction and return lines, or built-in or built-up connections and shall be installed to allow for the future addition of solar heating equipment.
- [ ] Covers. A cover for outdoor pools or outdoor spas that have a heat pump or gas heater.
- [ ] Pool shall have directional inlets that adequately mix the pool water; and time switch or similar control mechanism shall be installed as part of the pool water circulation control system.

Ventilation (§121)

- [X] All enclosed spaces in a building that are normally used by humans shall be ventilated in accordance with the requirements of this section and the CBC.
- [X] The outdoor air-ventilation rate and air-distribution assumptions made in the design of the ventilating system shall be clearly identified on the building plans required by §10-103 of Title 24, Part 1.
- [X] Every space in a building shall be designed to have outdoor air-ventilation either by Natural ventilation or Mechanical ventilation.
- [X] Times of occupancy. The minimum rate of outdoor air required by Section 121(b)2 shall be supplied to each space at all times when the space is usually occupied.
- [X] Ducting for Zonal Heating and Cooling Units. Where a return plenum is used to distribute outdoor air to a zonal heating or cooling unit which then supplies the air to a space in order to meet the requirements of Section 121(b)2 the outdoor air shall be ducted to discharge either: within 5 feet of the unit; or within 15 feet of the unit, substantially toward the unit, and at a velocity not less than 500 ft/min.
- [X] Design and Control Requirements for Quantities of Outdoor Air. All mechanical ventilation and space-conditioning systems shall be designed with and have installed ductwork, dampers, and controls to allow outside air rates to be operated at the larger of (1) the minimum levels specified in Section 121(b)1 or (2) the rate required for make-up of exhaust systems that are required for a process, for control of odors, or for the removal of contaminants within the space.

Demand Controlled Ventilation §121(c)

- [ ] Every space requiring Demand Control Ventilation. They must have an air economizer; and they serve a space with a design occupant density, or a maximum occupant load factor for egress purposes, greater than or equal to 25 people per 1000 ft^2 (40 square foot per person); and is either a single zone system with any controls or multiple zone systems with Direct Digital Controls (DDC) to the zone level.

3/27/2013 8:49:04 PM

SAN FRANCISCO OAKLAND BAY BRIDGE
EAST SPAN SEISMIC SAFETY PROJECT

IERBYS TEMPORARY IMPROVEMENTS - BUILDING

MECHANICAL TITLE 24

SHEET M004

Shahjahan Ali
DESIGN OVERSIGHT
03/27/13
SIGN OFF DATE

	BY	CHECKED
DESIGN	JAMES GRONEK	ROBERT C. NIXDORF
DETAILS	BY	CHECKED
QUANTITIES	BY	CHECKED

PREPARED FOR THE STATE OF CALIFORNIA DEPARTMENT OF TRANSPORTATION

KAREN Y. WANG
PROJECT ENGINEER

BRIDGE NO
POST MILES 2.0

DESIGN DETAIL SHEET (ENGLISH) (REV. 03/14/12)

ORIGINAL SCALE IN INCHES FOR REDUCED PLANS 0 1 2 3

UNIT: 04
PROJECT NUMBER AND PHASE:
CONTRACT NO.: 0120F4

DISREGARD PRINTS BEARING EARLIER REVISION DATES

REVISION DATES

SHEET 46 OF 66

C:\Users\cschurr\Documents\56185_Gateway Park - Central_cschurr.rvt

DIST	COUNTY	ROUTE	POST MILES TOTAL PROJECT	SHEET No	TOTAL SHEETS
04	ALA	80	2.0	1204az	1204

JRGK
REGISTERED ENGINEER

03/27/13
DATE

REGISTERED PROFESSIONAL ENGINEER JAMES R. GRONEK No. M 34898 MECHANICAL STATE OF CALIFORNIA

PLANS APPROVAL DATE

The state of California or its officers or agents shall not be responsible for the accuracy or completeness of scanned copies of this plan sheet.

WSP • FLACK + KURTZ
405 HOWARD ST. #500
SAN FRANCISCO, CA 94106

SHEET NOTES

A. (X) DENOTES EXISTING EQUIPMENT TO BE REMOVED.

NUMBERED NOTES

1. REMOVE INTERNAL COMPONENTS OF WALL-MOUNTED SINGER AIR-COOLED HEAT PUMP UNITS. EXTERNAL CASING SHALL REMAIN TO MAINTAIN INTEGRITY OF BUILDING ENVELOPE AND ASSOCIATED WATERPROOFING.

1 DEMOLITION FLOOR PLAN
1/8"=1'-0"

N

3/27/2013 8:49:10 PM

SAN FRANCISCO OAKLAND BAY BRIDGE
EAST SPAN SEISMIC SAFETY PROJECT

IERBYS TEMPORARY IMPROVEMENTS - BUILDING

MECHANICAL DEMOLITION FLOOR PLAN

SHEET M101

Shahjahan Ali
DESIGN OVERSIGHT

03/27/13
SIGN OFF DATE

	BY	CHECKED
DESIGN	JAMES GRONEK	ROBERT C. NIXDORF
DETAILS	BY	CHECKED
QUANTITIES	BY	CHECKED

PREPARED FOR THE
STATE OF CALIFORNIA
DEPARTMENT OF TRANSPORTATION

KAREN Y. WANG
PROJECT ENGINEER

BRIDGE NO

POST MILES 2.0

DESIGN DETAIL SHEET (ENGLISH) (REV. 03/14/12)

ORIGINAL SCALE IN INCHES FOR REDUCED PLANS 0 1 2 3

UNIT: 04
PROJECT NUMBER AND PHASE:
CONTRACT NO.: 0120F4

DISREGARD PRINTS BEARING EARLIER REVISION DATES

REVISION DATES

SHEET 47 OF 66

C:\Users\cschurr\Documents\56185_Gateway Park - Central_cschurr.rvt

DIST	COUNTY	ROUTE	POST MILES TOTAL PROJECT	SHEET No	TOTAL SHEETS
04	ALA	80	2.0	1204ba	1204

JRGK
REGISTERED ENGINEER — DATE 03/27/13

PLANS APPROVAL DATE

REGISTERED PROFESSIONAL ENGINEER — JAMES R. GRONEK — No. M 34898 — MECHANICAL — STATE OF CALIFORNIA

The state of California or its officers or agents shall not be responsible for the accuracy or completeness of scanned copies of this plan sheet.

WSP • FLACK + KURTZ
405 HOWARD ST. #500
SAN FRANCISCO, CA 94106

SHEET NOTES

A. MAIN DISPLAY SPACE IS TO BE NATURALLY VENTILATED. OPERABLE WINDOW AREA IS TO BE A MINIMUM OF 640 SF. THIS AREA IS IN COMPLIANCE WITH THE REQUIREMENTS OF THE CALIFORNIA MECHANICAL CODE, CHAPTER 4, SECTION 4.2 AND TITLE 24 SECTION 121(b)1. REFER TO ARCHITECTURAL DRAWINGS FOR OPERABLE WINDOW LOCATIONS AND SIZES.

B. PROVIDE REMOTE CABLE-OPERATED DAMPERS FOR ALL VOLUME DAMPERS LOCATED OVER INACCESSIBLE CEILINGS. REFER TO DETAIL 5/M601. DAMPER CONTROLLER TO BE ACCESSILBE THROUGH THE FACE OF THE DIFFUSER.

C. COORDINATE LOCATION OF ALL EXPOSED CONDUIT ROUTING FOR THERMOSTATS WTIH ARCHITECT PRIOR TO INSTALLATION.

NUMBERED NOTES

1. 12ø TOILET EXHAUST UP IN (E) ROOF PENETRATION.
2. 4ø COMBUSTION AIR DUCT THROUGH NEW ROOF PENETRATION.
3. 12ø TOILET EXHAUST UP IN NEW ROOF PENETRATION.
4. TERMINATE TRANSFER DUCT WITH WMS BEHIND CURVED SOFFIT.
5. OPEN SLOT BEHIND LIGHT COVE. MINIMUM 4" HIGH BY 120' LONG. REFER TO ARCHITECTURAL DRAWINGS FOR ACTUAL DIMENSIONS.
6. RS/RL PIPING TO VRV FAN UNITS NOT SHOWN FOR CLARITY. PIPES ARE TO BE ROUTED ABOVE OFFICE HARD-LID CEILING.
7. 4ø VENT DUCT THROUGH NEW ROOF PENETRATION.
8. INACTIVE SECTION OF SLOT WITH LIGHT SHIELD. APPEARANCE TO MATCH ACTIVE SECTIONS.
9. PROVIDE A SHEET METAL RETURN PLENUM WITH 1" A.L. AND ONE ELBOW UP FOR THE VRV UNIT. RETURN PLENUM TO CONTAIN 1" MERV-8 FILTER RACK. TYPICAL ALL VRV FAN COIL UNITS.
10. 1 SF NFA INTAKE LOUVER WITH 14x48 BY 8 INCH DEEP PLENUM CONCEALED WITHIN WALL DEPTH. TAP PLENUM TOP FOR 14x6 DUCT TO FAN SUCTION CONNECTION.
11. 12ø DISCHARGE DUCT FROM SF-1-1. RUN DUCT TO DISTRIBUTE VENTILATION AIR TO RETURN AIR PLENUM OF FCU-1-1, FCU-1-2, AND FCU-1-3. CONNECTION TO EACH FCU RETURN AIR PLENUM SHALL BE 8ø BALANCED TO 135 CFM EACH.
12. 4" TALL CONCRETE PAD. ESTIMATED SIZE IS 86x42 CONTRACTOR SHALL COORDINATE PAD SIZE BASED ON REQUIREMENTS OF EQUIPMENT PURCHASED.
13. PROVIDE COMMON CONTROL FOR THREE HEATERS AS INDICATED.

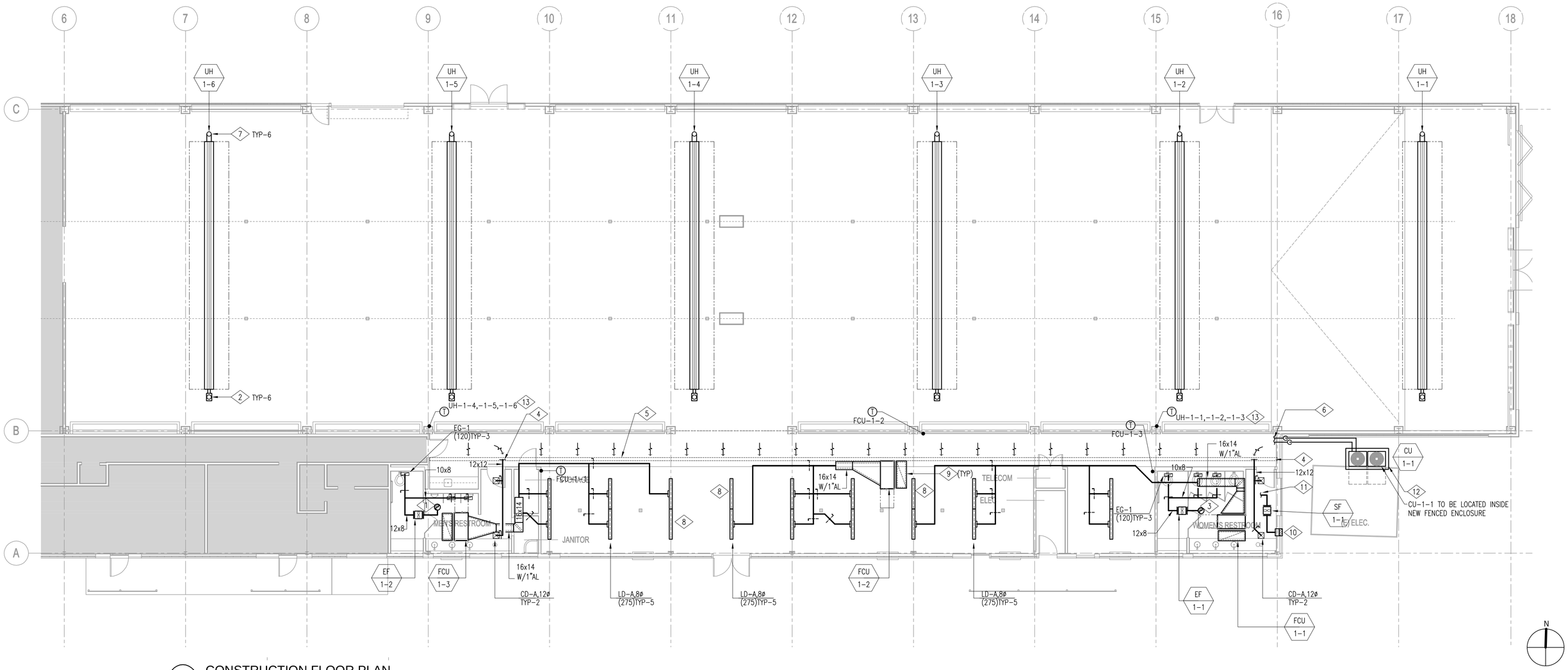

1 CONSTRUCTION FLOOR PLAN
1/8"=1'-0"

3/27/2013 8:49:15 PM

SAN FRANCISCO OAKLAND BAY BRIDGE EAST SPAN SEISMIC SAFETY PROJECT

IERBYS TEMPORARY IMPROVEMENTS - BUILDING

MECHANICAL CONSTRUCTION FLOOR PLAN

SHEET M201

Shahjahan Ali
DESIGN OVERSIGHT
03/27/13
SIGN OFF DATE

	BY	CHECKED
DESIGN	JAMES GRONEK	ROBERT C. NIXDORF
DETAILS	BY	CHECKED
QUANTITIES	BY	CHECKED

PREPARED FOR THE STATE OF CALIFORNIA DEPARTMENT OF TRANSPORTATION

KAREN Y. WANG
PROJECT ENGINEER

BRIDGE NO
POST MILES 2.0

DESIGN DETAIL SHEET (ENGLISH) (REV. 03/14/12)

ORIGINAL SCALE IN INCHES FOR REDUCED PLANS 0 1 2 3

UNIT: 04
PROJECT NUMBER AND PHASE:
CONTRACT NO.: 0120F4

DISREGARD PRINTS BEARING EARLIER REVISION DATES

REVISION DATES

SHEET 48 OF 66

C:\Users\cschurr\Documents\56185_Gateway Park - Central_cschurr.rvt

DIST	COUNTY	ROUTE	POST MILES TOTAL PROJECT	SHEET No	TOTAL SHEETS
04	ALA	80	2.0	1204bb	1204

JRGK
REGISTERED ENGINEER — 03/27/13 DATE

REGISTERED PROFESSIONAL ENGINEER JAMES R. GRONEK No. M 34898 MECHANICAL STATE OF CALIFORNIA

PLANS APPROVAL DATE

The state of California or its officers or agents shall not be responsible for the accuracy or completeness of scanned copies of this plan sheet.

WSP • FLACK + KURTZ
405 HOWARD ST. #500
SAN FRANCISCO, CA 94106

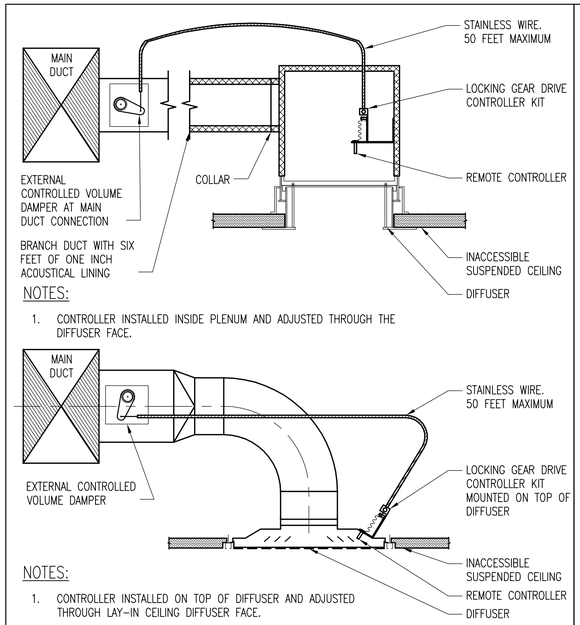

NOTES:

1. CONTROLLER INSTALLED INSIDE PLENUM AND ADJUSTED THROUGH THE DIFFUSER FACE.
1. CONTROLLER INSTALLED ON TOP OF DIFFUSER AND ADJUSTED THROUGH LAY-IN CEILING DIFFUSER FACE.

5 REMOTE CABLE DAMPER CONTROLLER

NO SCALE

COIL TYPE	H1 (HEIGHT)	H2 (HEIGHT)
BLOW-THROUGH (LOCATED ON DISCHARGE SIDE OF FAN)	1" MINIMUM	POSITIVE STATIC PRESSURE AT DRAIN PAN IN INCHES TIMES 2 (2" MINIMUM)
DRAW-THROUGH (LOCATED ON SUCTION SIDE OF FAN)	NEGATIVE STATIC PRESSURE AT DRAIN PAN IN INCHES PLUS 1"	NEGATIVE STATIC PRESSURE AT DRAIN PAN IN INCHES PLUS 1"

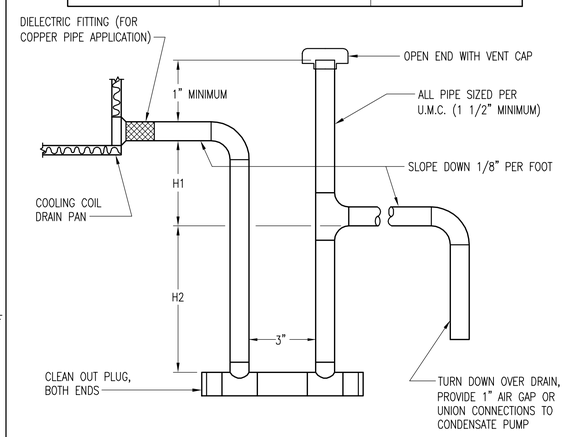

4 COOLING COIL CONDENSATE TRAP

NO SCALE

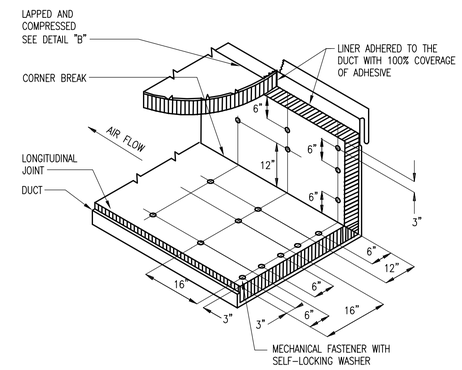

NOTES:

1. MECHANICAL FASTENERS ARE TO BE SPOT WELDED TO DUCTWORK.
2. PROVIDE SHEET METAL NOSING AS DESCRIBED IN SPECIFICATIONS.

2 ACOUSTICAL DUCT LINING DETAIL

NO SCALE

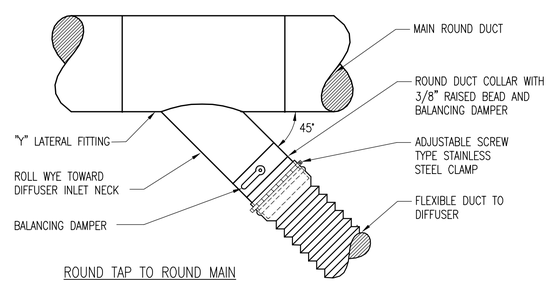

ROUND TAP TO ROUND MAIN

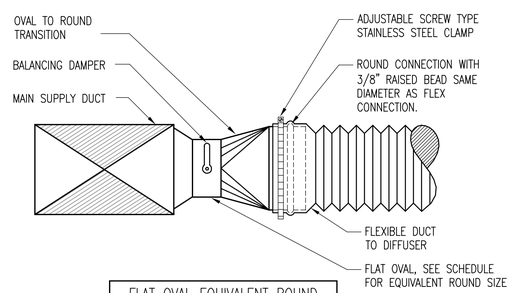

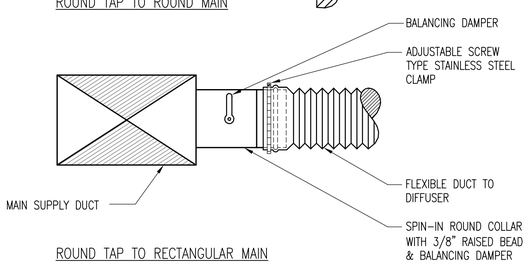

ROUND TAP TO RECTANGULAR MAIN (TAP SMALLER THAN MAIN)

FLAT OVAL EQUIVALENT ROUND	
ROUND ø	FLAT OVAL INCHES
6"	4x9
7"	5x10
8"	6x11
10"	6x11
12"	7x20
14"	8x22
16"	8x30

ROUND TAP TO RECTANGULAR MAIN (TAP LARGER THAN MAIN)

3 LOW PRESSURE BRANCH DUCT CONNECTIONS

NO SCALE

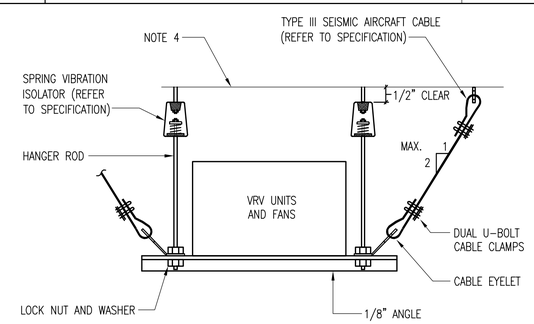

NOTES:

1. HANGER SPACING ALONG LENGTH OF UNIT TO BE AS FOLLOWS: MINIMUM – 2 HANGERS MAXIMUM SPACING 6'-0".
2. PROVIDE ADEQUATE SEISMIC CABLE BRACING TO RESIST MOTION IN ALL LATERAL DIRECTIONS.
3. REFER TO SMACNA SEISMIC RESTRAINT MANUAL GUIDELINES (LATEST EDITION) FOR MECHANICAL SYSTEMS.
4. ATTACH TO STRUCTURE ABOVE.

1 SUSPENDED EQUIPMENT WITH SEISMIC CABLES

NO SCALE

SAN FRANCISCO OAKLAND BAY BRIDGE
EAST SPAN SEISMIC SAFETY PROJECT

IERBYS TEMPORARY IMPROVEMENTS - BUILDING

MECHANICAL DETAILS

SHEET M601

Shahjahan Ali
DESIGN OVERSIGHT
03/27/13
SIGN OFF DATE

	BY	CHECKED
DESIGN	JAMES GRONEK	ROBERT C. NIXDORF
DETAILS	BY	CHECKED
QUANTITIES	BY	CHECKED

PREPARED FOR THE STATE OF CALIFORNIA DEPARTMENT OF TRANSPORTATION

KAREN Y. WANG
PROJECT ENGINEER

BRIDGE NO
POST MILES 2.0

DESIGN DETAIL SHEET (ENGLISH) (REV. 03/14/12)

ORIGINAL SCALE IN INCHES FOR REDUCED PLANS 0 1 2 3

UNIT: 04
PROJECT NUMBER AND PHASE:
CONTRACT NO.: 0120F4

DISREGARD PRINTS BEARING EARLIER REVISION DATES

REVISION DATES

SHEET 49 OF 66

C:\Users\cschurr\Documents\56185_Gateway Park - Central_cschurr.rvt

3/27/2013 8:49:21 PM

DIST	COUNTY	ROUTE	POST MILES TOTAL PROJECT	SHEET No	TOTAL SHEETS
04	ALA	80	2.0	1204bc	1204

REGISTERED ENGINEER — DATE 03/27/13

PLANS APPROVAL DATE

REGISTERED PROFESSIONAL ENGINEER ANDREW HARRINGTON No. E19367 ELECTRICAL STATE OF CALIFORNIA

The state of California or its officers or agents shall not be responsible for the accuracy or completeness of scanned copies of this plan sheet.

WSP • FLACK + KURTZ
405 HOWARD ST. #500
SAN FRANCISCO, CA 94106

ELECTRICAL LEGEND AND ABBREVIATIONS

FLOOR BOX LEGEND

RECESSED FLUSH	
	COMBINATION DUPLEX RECEPTACLE/TELECOM OUTLET: 125V

GENERAL ELECTRICAL NOTES

A. ARCHITECTURAL DRAWINGS TAKE PRECEDENCE OVER ENGINEERING DOCUMENTS FOR EXACT LOCATION, MOUNTING HEIGHTS AND SUSPENSION LENGTHS OF ALL ELECTRICAL EQUIPMENT.

B. THIS SET OF ELECTRICAL DRAWINGS SHOULD ACCOMPANY A WRITTEN SET OF DIVISION 26 SPECIFICATIONS WITH WHICH THE CONTRACTOR MUST COMPLY.

C. CONTRACTOR SHALL MAINTAIN A COMPLETE SET OF AS-BUILT DOCUMENTS THROUGHOUT CONSTRUCTION INDICATING CONDUIT ROUTING, JUNCTION BOX LOCATIONS AND ACTUAL CIRCUIT NUMBER USED AT EACH ELECTRICAL DEVICE. AS-BUILT DOCUMENTS SHALL ACCURATELY REFLECT NEW AND EXISTING CONDITIONS.

D. UPON PROJECT COMPLETION, PROVIDE TWO SETS OF ALL AS-BUILT DOCUMENTS TO OWNER AND BUILDING ENGINEER.

E. PROVIDE ACCURATE, TYPEWRITTEN, UPDATED PANELBOARD DIRECTORIES FOR ALL AFFECTED PANELS. INDICATE NEW AND EXISTING CIRCUITS AS WELL AS SPARE CIRCUITS AND BREAKER SPACES. TURN "OFF" ALL SPARE BREAKERS.

F. CONNECT NEW FIRE ALARM DEVICES TO NEW VOICE EVACUATION FIRE ALARM SYSTEM.

G. TELECOMMUNICATIONS, AV, AND SECURITY CABLING PROVIDED BY OTHERS. ELECTRICAL CONTRACTOR TO PROVIDE AND COORDINATE RACEWAY, CABLE TRAY, BOX AND POWER REQUIREMENTS WITH VENDORS.

H. PRIOR TO THE SUBMITTING OF BIDS, VISIT THE PROJECT SITE AND BECOME FAMILIAR WITH ALL CONDITIONS AFFECTING THE PROPOSED INSTALLATION AND MAKE PROVISIONS AS TO THE COST THEREOF.

I. EXISTING ELECTRICAL SERVICES NOT SPECIFICALLY INDICATED TO BE REMOVED OR ALTERED SHALL REMAIN AS THEY PRESENTLY EXIST.

J. WHERE EXISTING SERVICES INTERFERE WITH NEW CONSTRUCTION, ALTER OR REROUTE SUCH EXISTING EQUIPMENT TO FACILITATE NEW CONSTRUCTION AFTER OBTAINING WRITTEN PERMISSION FROM THE ARCHITECT. NOTIFICATION IN WRITING GIVING TWO WEEKS ADVANCE NOTICE OF PLANNED ALTERATION IS REQUIRED.

K. PRESERVE CONTINUITY OF SERVICE OF EXISTING FACILITIES (RELATED TO DAMAGE OR ALTERATION DUE TO NEW CONSTRUCTION). UNAUTHORIZED ALTERATION TO EXISTING EQUIPMENT SHALL BE CORRECTED WITHOUT ADDITIONAL COST TO THE OWNER.

L. WHERE A CIRCUIT IS INTERRUPTED BY REMOVAL OF A DEVICE OR FIXTURE FROM THAT CIRCUIT, PROVIDE ADDITIONAL CONDUIT AND WIRE TO RESTORE SERVICE TO THE REMAINING DEVICES AND FIXTURES ON THAT CIRCUIT.

M. ELECTRICAL EQUIPMENT TO BE REMOVED THAT IS IN GOOD WORKING ORDER SHALL BE CAREFULLY REMOVED AND OFFERED TO THE OWNER. ITEMS REJECTED BY THE OWNER SHALL BE REMOVED FROM THE PROJECT SITE AND PROPERLY DISPOSED OF.

N. THE CONTRACT DOCUMENTS DO NOT MAKE REPRESENTATIONS REGARDING THE CHARACTER OR EXTENT OF THE EXISTING STRUCTURAL, MECHANICAL AND ELECTRICAL INSTALLATIONS, WHICH MAY BE ENCOUNTERED DURING THE WORK. EVALUATE EXISTING CONDITIONS, WHICH MAY AFFECT METHODS OR COST OF PERFORMING THE WORK, BASED ON EXAMINATION OF THE SITE OR OTHER INFORMATION. FAILURE TO EXAMINE THE DRAWINGS OR OTHER INFORMATION DOES NOT RELIEVE THE CONTRACTOR OF RESPONSIBILITY FOR THE SATISFACTORY COMPLETION OF THE WORK.

WIRING DEVICE LEGEND

	DUPLEX RECEPTACLE OUTLET: 125V; WALL MOUNTED
	DUPLEX RECEPTACLE OUTLET: 125V TOP HALF SWITCHED
	DUPLEX RECEPTACLE OUTLET: 125V, DEDICATED; WALL MOUNTED
	DOUBLE DUPLEX RECEPTACLE OUTLET: 125V; WALL MOUNTED
	SPECIAL PURPOSE RECEPTACLE OUTLET: RATING AS INDICATED; WALL MOUNTED
	CLOCK RECEPTACLE OUTLET: 125V, 15A
	POWER CONNECTION TO ELECTRIFIED FURNITURE SYSTEM
	DUPLEX RECEPTACLE OUTLET: 125V; CEILING MOUNTED
	DUPLEX RECEPTACLE OUTLET: 125V, DEDICATED; CEILING MOUNTED
	DOUBLE DUPLEX RECEPTACLE OUTLET: 125V; CEILING MOUNTED
	SPECIAL PURPOSE RECEPTACLE OUTLET: RATING AS INDICATED; CEILING MOUNTED
	PUSH BUTTON
B	BUZZER
B	BELL
	POWER TYPE PLUGSTRIP OR SURFACE RACEWAY, LENGTH APPROXIMATELY AS SHOWN
	POWER/TELECOM TYPE PLUGSTRIP OR SURFACE RACEWAY, LENGTH APPROXIMATELY AS SHOWN
	TELECOM OUTLET
	TELECOM CONNECTION TO ELECTRIFIED FURNITURE SYSTEM
$	SINGLE POLE SWITCH
$2	DOUBLE POLE SWITCH
$3	THREE WAY SWITCH
$4	FOUR WAY SWITCH
$F	FAN SWITCH
$H	ILLUMINATED HANDLE SWITCH
$K	KEY SWITCH
$MC	MOMENTARY CONTACT SWITCH
TS	TIMER SWITCH
D	WALL DIMMER
LV	LOW VOLTAGE SWITCH
PC	PHOTOCELL
OS	OCCUPANCY SENSOR; WALL MOUNTED
OS	2 WAY OCCUPANCY SENSOR; CEILING MOUNTED
OS	1 WAY OCCUPANCY SENSOR; CEILING MOUNTED
OS	CORRIDOR OCCUPANCY SENSOR; CEILING MOUNTED

FIRE ALARM LEGEND

P	MANUAL PULL STATION
	AREA SMOKE DETECTOR, CEILING MOUNTED (SMOKE DETECTOR, SEMI-FLUSH MOUNTED IN CEILING)
	AREA SMOKE DETECTOR, WALL MOUNTED
	DUCT TYPE SMOKE DETECTOR
	HEAT DETECTOR, CEILING MOUNTED
BR BT	BEAM DETECTOR: R = RECEIVER, T = TRANSMITTER
W	SPRINKLER WATER FLOW SWITCH
T	SPRINKLER TAMPER SWITCH
S	FIRE ALARM SPEAKER; CEILING MOUNTED
S	FIRE ALARM SPEAKER; WALL MOUNTED
S	COMBINATION FIRE ALARM SPEAKER/VISUAL ALARM; WALL MOUNTED
S	COMBINATION FIRE ALARM SPEAKER/VISUAL ALARM; CEILING MOUNTED
	VISUAL ALARM; CEILING MOUNTED
	VISUAL ALARM; WALL MOUNTED
H	MAGNETIC DOOR HOLDER
	FIRE ALARM BELL
FSD	FIRE/SMOKE DAMPER
SD	SMOKE DAMPER
FACP	FIRE ALARM AND CONTROL PANEL
FARP	FIRE ALARM REMOTE PANEL
FATC	FIRE ALARM TERMINAL CABINET
FARA	FIRE ALARM REMOTE ANNUNCIATOR

WIRING DEVICE SUBSCRIPT LEGEND

AC	AC = ABOVE COUNTER
GFI	GFI = GROUND FAULT INTERRUPTER
WP	WP = WEATHERPROOF
MW	MW = MICROWAVE
a	a = LOWER CASE LETTER INDICATES SWITCH CONTROL
27	27 = NUMBER INDICATES CIRCUIT NUMBER
IG	IG = ISOLATED GROUND (ONE OF DOUBLE DUPLEX)
$a	a = LOWER CASE INDICATES SWITCH CONTROL

POWER LEGEND

	ELECTRICAL DISTRIBUTION EQUIPMENT, SIZE APPROX. AS SHOWN. DOUBLE LINE INDICATES FRONT.
	SURFACE MOUNTED EQUIPMENT, SIZE APPROXIMATELY AS SHOWN
	RECESSED MOUNTED EQUIPMENT, SIZE APPROXIMATELY AS SHOWN
	SURFACE MOUNTED 120/208V PANELBOARD, SIZE APPROXIMATELY AS SHOWN
	RECESSED MOUNTED 120/208V PANELBOARD, SIZE APPROXIMATELY AS SHOWN
T F	STEP DOWN TRANSFORMER
	HEAVY DUTY DISCONNECT SWITCH
	HEAVY DUTY DISCONNECT SWITCH WITH FUSE
	MOTOR STARTER
	MOTOR STARTER, NOT PROVIDED UNDER ELECTRICAL SCOPE
	COMBINATION MOTOR STARTER/DISCONNECT SWITCH
	COMBINATION MOTOR STARTER/DISCONNECT SWITCH, NOT PROVIDED UNDER ELECTRICAL SCOPE
VFD	VFD WITH DISCONNECT, NOT PROVIDED UNDER ELECTRICAL SCOPE
VFD	VFD WITHOUT DISCONNECT, NOT PROVIDED UNDER ELECTRICAL SCOPE
$MD	MOTORIZED DOOR CONTROLLER (FURNISHED WITH DOOR)
$MS	MOTORIZED SHADE CONTROLLER (FURNISHED WITH SHADES)
$PS	PROJECTION SCREEN CONTROLLER (FURNISHED WITH SCREEN)
$SC	SPEED CONTROLLER (FURNISHED WITH EQUIPMENT)
$T	THERMAL OVERLOAD/DISCONNECT SWITCH
M	MOTOR CONNECTION
J	JUNCTION BOX, CEILING MOUNTED
J	JUNCTION BOX, WALL MOUNTED
P B	PULL BOX
G	GROUND BUS CABINET
	CIRCUIT BREAKER
	SWITCH AND FUSE
	CIRCUIT BREAKER IN ENCLOSURE
	NORMALLY OPEN CONTACT
	NORMALLY CLOSED CONTACT
	RELAY OR CONTACTOR: CONTACTS SHOWN WITH COIL DEENERGIZED
	TRANSFORMER

SF-1 — EQUIPMENT DESIGNATION
MCC-1A — POWER SOURCE

LIGHTING LEGEND

	LIGHTING FIXTURE; CEILING MOUNTED
	LIGHTING FIXTURE; WALL MOUNTED
	LIGHTING FIXTURE, SIZE APPROXIMATELY AS SHOWN; CEILING MOUNTED
	LIGHTING FIXTURE, SIZE APPROXIMATELY AS SHOWN; WALL MOUNTED
	EMERGENCY LIGHTING FIXTURE WITH BATTERY BACKUP
	LIGHTING FIXTURE, CONTINUOUS ROW; CEILING MOUNTED
	LIGHTING FIXTURE, WALL WASHER; CEILING MOUNTED
	LIGHTING FIXTURE(S); POLE MOUNTED
2 a A	LIGHTING FIXTURE SUBSCRIPTIONS: NUMBER INDICATES CIRCUIT, LOWERCASE LETTER INDICATES SWITCH CONTROL UPPERCASE LETTER INDICATES FIXTURE TYPE
	LIGHTING TRACK WITH FIXTURES, LENGTH APPROXIMATELY AS SHOWN
EXIT SIGNS	ARROWS AS SHOWN, ILLUMINATED FACE AS INDICATED BY SHADING, CONNECT TO EMERGENCY POWER SYSTEM
	EXIT SIGN; WALL MOUNTED
	EXIT SIGN; CEILING MOUNTED
P	EXIT SIGN; PENDENT MOUNTED
L	EXIT SIGN, LOW LEVEL; RECESSED IN WALL

RACEWAY LEGEND

	CONDUIT CONCEALED ABOVE CEILING OR WITHIN WALL
	CONDUIT BELOW GRADE OR EMBEDDED WITHIN SLAB
	CONDUIT UP
	CONDUIT DOWN
	CONDUIT STUBBED OUT WITH BUSHING NOTE: PROVIDE PULLSTRING IN EACH EMPTY RACEWAY
	CONDUIT STUBBED OUT AND CAPPED NOTE: PROVIDE PULLSTRING IN EACH EMPTY RACEWAY
AV	AUDIO/VISUAL SYSTEM RACEWAY
FA	FIRE ALARM SYSTEM RACEWAY
	CONDUIT HOMERUN, MAXIMUM OF (3) BRANCH CIRCUITS, UON NOTE: MAXIMUM OF THREE BRANCH CIRCUITS FOR EACH HOMERUN, UON

EQUIPMENT NAMING LEGEND

P1 / 1,3,5 — CIRCUIT NUMBER(S)
PANEL NAME

ABBREVIATIONS

℄	CENTER LINE
AFF	ABOVE FINISHED FLOOR
AIC	AMPERES INTERRUPTING CAPACITY
AF/AS	AMPERE RATING OF FUSE/SWITCH
AT/AF	AMPERE RATING OF CIRCUIT, BREAKER TRIP/FRAME
A/V	AUDIO/VISUAL
BMS	BUILDING MANAGEMENT SYSTEM
CKT	CIRCUIT
DPDT	DOUBLE POLE DOUBLE THROW
DPST	DOUBLE POLE SINGLE THROW
(E)	EXISTING TO REMAIN
EC	EMPTY CONDUIT
ELV	ELECTRONIC LOW VOLTAGE
EMT	ELECTRICAL METALLIC TUBING
FCC	FIRE CONTROL CENTER
GFI	GROUND FAULT INTERRUPTOR
GND	GROUND
INV	INVERTER
IG	ISOLATED GROUND
LRC	LIGHTING RELAY CABINET
MCP	MOTOR CIRCUIT PROTECTOR
MIC	MINERAL INSULATED CABLE
MS	MAIN SWITCHBOARD
(N)	NEW
NC	NORMALLY CLOSED
NO	NORMALLY OPEN
NTS	NOT TO SCALE
PVC	POLYVINYL CHLORIDE CONDUIT
(R)	EXISTING TO BE RELOCATED
RAC	RIGID ALUMINUM CONDUIT
RSC	RIGID STEEL CONDUIT
SCC	SECURITY CONTROL CENTER
SPDT	SINGLE POLE DOUBLE THROW
SPST	SINGLE POLE SINGLE THROW
TEL	TELECOM
TVSS	TRANSIENT VOLTAGE SURGE SURPRESSION
TYP	TYPICAL
UH	UNIT HEATER
UON	UNLESS OTHERWISE NOTED
UPS	UNINTERRUPTIBLE POWER SUPPLY
WP	WEATHERPROOF
WT	WATERTIGHT
(X)	EXISTING TO BE REMOVED
XP	EXPLOSION PROOF

3/27/2013 8:46:58 PM

SAN FRANCISCO OAKLAND BAY BRIDGE
EAST SPAN SEISMIC SAFETY PROJECT

Jaswinder Gill
DESIGN OVERSIGHT
03/27/13
SIGN OFF DATE

	BY	CHECKED
DESIGN	ANDREW HARRINGTON	ROBERT C. NIXDORF
DETAILS		
QUANTITIES		

PREPARED FOR THE
STATE OF CALIFORNIA
DEPARTMENT OF TRANSPORTATION

KAREN Y. WANG
PROJECT ENGINEER

BRIDGE NO
POST MILES 2.0

IERBYS TEMPORARY IMPROVEMENTS - BUILDING

ELECTRICAL LEGEND AND ABBREVIATIONS

SHEET E000

DESIGN DETAIL SHEET (ENGLISH) (REV. 03/14/12)

ORIGINAL SCALE IN INCHES FOR REDUCED PLANS 0 1 2 3

UNIT: 04
PROJECT NUMBER AND PHASE: CONTRACT NO.: 0120F4

DISREGARD PRINTS BEARING EARLIER REVISION DATES

REVISION DATES

SHEET 50 OF 66

C:\Users\cschurr\Documents\56185_Gateway Park - Central_cschurr.rvt

DIST	COUNTY	ROUTE	POST MILES TOTAL PROJECT	SHEET No	TOTAL SHEETS
04	ALA	80	2.0	1204bd	1204

REGISTERED ENGINEER — DATE 03/27/13

PLANS APPROVAL DATE

REGISTERED PROFESSIONAL ENGINEER · ANDREW HARRINGTON · No. E19367 · ELECTRICAL · STATE OF CALIFORNIA

The state of California or its officers or agents shall not be responsible for the accuracy or completeness of scanned copies of this plan sheet.

WSP • FLACK + KURTZ
405 HOWARD ST. #500
SAN FRANCISCO, CA 94106

CERTIFICATE OF COMPLIANCE (Part 3 of 4) LTG-1C

Project Name: *IERBYS TEMPORAQRY IMPROVEMENTS* — Date: *3/15/2013*

INDOOR LIGHTING SCHEDULE and FIELD INSPECTION ENERGY CHECKLIST

Fill in controls for all spaces: a) area controls, b) multi-level controls, c) manual daylighting controls for daylit areas > 250 ft^2, automatic daylighting controls for daylit areas > 2,500 ft^2, d) shut-off controls, e) display lighting controls, f) tailored lighting controls – general lighting controlled separately from display, ornamental and display case lighting and g) demand responsive automatic controls for retail stores > 50,000 ft^2, in accordance with Section 131.

MANDATORY LIGHTING CONTROLS – FIELD INSPECTION ENERGY CHECKLIST

Type/ Description	Number of Units	Location in Building	Special Features	Field Inspector Pass	Field Inspector Fail
			☐	☐	☐

SPECIAL FEATURES INSPECTION CHECKLIST (See Page 2 of 4 of LTG-1C)

The local enforcement agency should pay special attention to the items specified in this checklist. These items require special written justification and documentation, and special verification. The local enforcement agency determines the adequacy of the justification, and may reject a building or design that otherwise complies based on the adequacy of the special justification and documentation submitted.

Field Inspector's Notes or Discrepancies:

EnergyPro 5.1 by EnergySoft User Number: 5056 RunCode: 2013-03-15T13:35:19 ID: S121123000 Page 3 of 12

CERTIFICATE OF COMPLIANCE (Part 2 of 4) LTG-1C

Project Name: *IERBYS TEMPORAQRY IMPROVEMENTS* — Date: *3/15/2013*

INDOOR LIGHTING SCHEDULE and FIELD INSPECTION ENERGY CHECKLIST

Installation Certificate, LTG-1- INST (Retain a copy and verify form is completed and signed.) — **Field Inspector** ☐

Certificate of Acceptance, LTG-2A and LTG-3A (Retain a copy and verify form is completed and signed.) — **Field Inspector** ☐

A separate Lighting Schedule Must Be Filled Out for Conditioned and Unconditioned Spaces Installed Lighting Power listed on this Lighting Schedule is only for:

☑ **CONDITIONED SPACE** ☐ **UNCONDITIONED SPACE**

☑ The actual indoor lighting power listed below includes all installed permanent and portable lighting systems in accordance with §146(a).

☑ Only for offices: Up to the first 0.2 watts per square foot of portable lighting shall not be required to be included in the calculation of actual indoor lighting power density in accordance with the Exception to §146(a). All portable lighting in excess of 0.2 watts per square foot is totaled below.

A: None or Item Tag	B: Luminaire (Type, Lamps, Ballasts) — Complete Luminaire Description[1] (i.e. 3 lamp fluorescent troffer, F32T8, one dimmable electronic ballasts)	C	D: Watts per Luminaire[1]	E: How wattage Was determined — CEC Default From NA8	E: According To §130 (d or e)	F: Number of Luminaires	G: Installed Watts (D X F)	H: Field Inspector[2] Pass	H: Fail
EXISTING	EXISTING - Medium Base Pendant Fixture		60.0	☑	☐	10	600	☐	☐
F1	F1 - (4) 28W Linear Fluorescent T5 Elec, (3)12.2W MR16		162.0	☑	☐	10	1,620	☐	☐
F2	F2/F2d - 20W LED Downlight		20.0	☑	☐	15	300	☐	☐
F3	F3 - (1) 28W Linear Fluorescent T5 Elec		30.0	☑	☐	6	180	☐	☐
F4	F4 - 10W LED Downlight		10.0	☑	☐	8	80	☐	☐
F5	F5 - (1) 28W Linear Fluorescent T5 Elec		30.0	☑	☐	35	1,050	☐	☐
F6	F6 - Track Lighting, 120V * Amps of OCP Device		120.0	☑	☐	180	21,600	☐	☐
F7	F7 - LED Undercabinet Light, 8W/linear ft		8.0	☑	☐	8	64	☐	☐
F8	F8 - Linear LED Strip, 3.2W/linear ft		3.2	☑	☐	108	346	☐	☐
FX3	FX3 - Linear LED Light, 17W/linear ft		17.0	☑	☐	32	544	☐	☐
W1	W1 - (1) 28W Linear Fluorescent T5 Elec		30.0	☑	☐	3	90	☐	☐
W2	W2 - (2) 28W Linear Fluorescent T5 Elec		60.0	☑	☐	1	60	☐	☐
				☐	☐			☐	☐

Installed Watts Page Total: 26,534

Building total number of pages: — Installed Watts Building Total (Sum of all pages) Enter into LTG-1C Page 4 of 4: 26,534

1. Wattage shall be determined according to Section 130 (d and e). Wattage shall be rating of light fixture, not rating of bulb.
2. If Fail then describe on Page 2 of the Inspection Checklist Form and take appropriate action to correct. Verify building plans if necessary.

EnergyPro 5.1 by EnergySoft User Number: 5056 RunCode: 2013-03-15T13:35:19 ID: S121123000 Page 2 of 12

CERTIFICATE OF COMPLIANCE (Part 1 of 4) LTG-1C

Project Name	Date		
IERBYS TEMPORAQRY IMPROVEMENTS	3/15/2013		
Project Address	**Climate Zone**	**Total Cond. Floor Area**	**Unconditioned Floor Area**
210 BURMA ROAD OAKLAND	3	15,700	0

GENERAL INFORMATION

Building Type: ☑ Nonresidential ☐ High-Rise Residential ☐ Hotel/Motel Guest Room ☐ School ☐ Relocatable Public School ☑ Conditioned Spaces ☐ Unconditioned Spaces

Phase of Construction: ☐ New Construction ☐ Addition ☑ Alteration

Method of Compliance: ☐ Complete Building ☑ Area Category ☐ Tailored

Documentation Author's Declaration Statement

I certify that this Certificate of Compliance documentation is accurate and complete.

Name: ANDREW HARRINGTON — Signature: [signed]
Company: WSP Flack+Kurtz — Date: 3/15/2013
Address: 405 HOWARD ST STE 500 — CEA # / CEPE #
City/State/Zip: SAN FRANCISCO, CA 94105 — Phone: (415) 398-3833

The Principal Lighting Designer's Declaration Statement

- I am eligible under Division 3 of the California Business and Professional Code to accept responsibility for the lighting design.
- This Certificate of Compliance identifies the lighting features and performance specifications required for compliance with Title 24, Pages 1 and 6 of the California Code of Regulations.
- The design features represented on this Certificate of Compliance are consistent with the information provided to document this design on the other applicable compliance forms, worksheets, calculations, plans and specifications submitted to the enforcement agency for approval with this building permit application.

Name: ANDREW HARRINGTON — Signature: [signed]
Company: WSP FLACK + KURTZ — Phone: 415.398.3833
Address: 405 HOWARD STREET — License #: E19367
City/State/Zip: SAN FRANCISCO , CA 94105 — Date: 02/15/2013

Lighting Mandatory Measures
Indicate location on building plans of Mandatory Measures Note Block: THIS SHEET

LIGHTING COMPLIANCE FORMS & WORKSHEETS (check box if worksheets is included)

For detailed instructions on the use of this and all Energy Efficiency Standards compliance forms; please refer to the Nonresidential Manual published by the California Energy Commission.

- ☑ LTG-1C Pages 1 through 4 — Certificate of Compliance. All Pages required on plans for all submittals.
- ☑ LTG-2C — Lighting Controls Credit Worksheet
- ☑ LTG-3C — Indoor Lighting Power Allowance
- ☐ LTG-4C Pages 1 through 4 — Tailored Method Worksheet
- ☐ LTG-5C Pages 1 and 2 — Line Voltage Track Lighting Worksheet

EnergyPro 5.1 by EnergySoft User Number: 5056 RunCode: 2013-03-15T13:35:19 ID: S121123000 Page 1 of 12

LIGHTING FIXTURE SCHEDULE

TYPE	DESCRIPTION	MANUFACTURER CATALOG NUMBER	LAMP DESCRIPTION	LAMP WATTS	LAMP QTY	INPUT VOLTS	FIXTURE INPUT WATTS	REMARKS
F1	DIMMABLE LINEAR FLUORESCENT DOWNLIGHT WITH LENS AND (3) MR16 LED ACCENT LIGHTS	SEE 26 50 00	(4) 28W T5 (3) 12.2W MR16 LED SEE 26 51 00	28 12.2	4 3	120	162	(2) T5 LAMP IN CROSS–SECTION, (4) T5 LAMPS TOTAL WITH LED SPOT IN THE MIDDLE AND AT EACH END, PROVIDE INTEGRAL BATTERY BALLAST FOR ONE LAMP WHERE INDICATED
F2/F2d	RECESSED ADJUSTABLE LED DOWNLIGHT	SEE 26 50 00	INTEGRAL LED SEE 26 51 00	20	1	120	20	
F3	SURFACE MOUNTED FLUORESCENT STRIP LIGHT	SEE 26 50 00	28W T5 SEE 26 51 00	28	1	120	30 PER 4'	
F4	RECESSED LED DOWNLIGHT	SEE 26 50 00	INTEGRAL LED SEE 26 51 00	10	1	120	10	
F5	SURFACE MOUNTED FLUORESCENT STRIP LIGHT, DIMMABLE	SEE 26 50 00	28W T5 SEE 26 51 00	28	1	120	30 PER 4'	PROVIDE INTEGRAL BATTERY BALLAST WHERE INDICATED
F6/F6T	120V TRACK SYSTEM WITH 39W LED TRACK MOUNTED LIGHTS	SEE 26 50 00	INTEGRAL LED SEE 26 51 00	39	1	120	39	WATTS FOR ENERGY CODE DETERMINED BY RATING OF CIRCUITS SERVING TRACK
F7	SURFACE MOUNTED LED UNDERCABINET LIGHT	SEE 26 50 00	INTEGRAL LED SEE 26 51 00	6.5 PER 1'	–	120	8 PER 1'	INTEGRAL DRIVER
F8	SURFACE MOUNTED LED STRIP	SEE 26 50 00	INTEGRAL LED SEE 26 51 00	2.4 PER 1'	–	120	3.2 PER 1'	PROVIDE REMOTE POWER SUPPLY PER SPECIFICATION AND MANUFACTURER REQUIREMENTS – COORDINATE LOCATION WITH ARCHITECT PRIOR TO INSTALLATION
EXISTING PENDANT	EXISTING/REFURBISHED RLM PENDANTS WITH MEDIUM BASE SOCKET, CFL RETROFIT	SEE 26 50 00	MEDIUM BASE	32W CFL	1	120	32	PROVIDE UL 1598 COMPLIANT WATTAGE RESTRICTION LABEL INSIDE SOCKET – MAXIMUM RELAMPING WATTAGE 60W
FX1	WALL SURFACE MOUNTED RLM DOWNLIGHT, COMPACT FLUORESCENT WITH INTEGRAL BALLAST	SEE 26 50 00	42W CFL	42	1	120	46	WHERE INDICATED, PROVIDE BATTERY BACKUP BALLAST SUITABLE FOR LAMP TYPE, BODINE B75C OR APPROVED EQUAL. COORDINATE MOUNTING LOCATION WITH ARCHITECT AND PROVIDE NEMA 3R WEATHERPROOF ENCLOSURE IF REQUIRED
FX2	SURFACE MOUNTED LINEAR LED LIGHT	SEE 26 50 00	INTEGRAL LED SEE 26 51 00	10 PER 1'	–	120	96 PER DRIVER	PROVIDE 96W DRIVER AVAILABLE FROM MANUFACTURER, COORDINATE MOUNTING LOCATION WITH ARCHITECT PRIOR TO INSTALLATION
FX3	SURFACE MOUNTED LINEAR LED LIGHT	SEE 26 50 00	INTEGRAL LED SEE 26 51 00	13 PER 1'	–	120	17 PER 1'	INTEGRAL DRIVER
POLE LIGHTS	EXTERIOR POLE MOUNTED LIGHTING TO BE SPECIFIED BY CALIFORNIA DOT	TO BE DETERMINED	TO BE DETERMINED	–	–	120	300	MAXIMUM 300 INPUT WATTS
W1	LOW–PROFILE FLUORESCENT STRIPLIGHT WITH WIREGUARD	LITHONIA Z–1–28T5–()–()–MVOLT–GEP10PS–WGZ46	28W T5 OSRAM FP28/830/ECO	28	1	120	30	OR APPROVED EQUAL
W2	FLUORESCENT STRIPLIGHT WITH WIREGUARD	LITHONIA Z–2–28T5–()–()–MVOLT–GEP10PS–WGZ46	28W T5	28	2	120	60	OR APPROVED EQUAL
W3	ARCHITECTURAL LED EMERGENCY LIGHT WITH INTEGRAL BATTERY	DUAL–LITE EV–2–()–()–()	INTEGRAL LED	1	2	120	2	FIXTURE SHALL BE NORMALLY OFF AND SHALL AUTOMATICALLY ILLUMINATE UPON UTILITY POWER LOSS
EXIT SIGN	EDGE–LIT LED, RED LETTERS ON MIRRORED FACE, BRUSHED ALUMINUM HOUSING	LITHONIA LRP–()–1–RC–()–120/277–()–()	LED ASSEMBLY INCLUDED	––	1	120/277	3	CONTRACTOR TO COORDINATE DIRECTIONAL INDICATORS AND REQUIRED MOUNTING CONFIGURATIONS WITH ELECTRICAL DRAWINGS AND FIELD CONDITIONS PRIOR TO RELEASE. VERIFY HOUSING FINISH WITH ARCHITECT.

LIGHTING MANDATORY MEASURES: NONRESIDENTIAL LTG-MM

Project Name: *IERBYS TEMPORAQRY IMPROVEMENTS* — Date: *3/15/2013*

Indoor Lighting Measures:

§131(d): **Shut-off Controls**

1. For every floor, all interior lighting systems shall be equipped with a separate automatic control to shut off the lighting. This automatic control shall meet the requirements of Section 119 and may be an occupancy sensor, automatic time switch, or other device capable of automatically shutting off the lighting.
2. Override for Building Lighting Shut-off: The automatic building shut-off system is provided with a manual, accessible override switch in sight of the lights. The area of override is not to exceed 5,000 square feet.

§119(h): Automatic Control Devices Certified: All automatic control devices specified are certified, all alternate equipment shall be certified and installed as directed by the manufacturer.

§111: Fluorescent Ballast and Luminaires Certified: All fluorescent fixtures specified for the project are certified and listed in the Directory. All installed fixtures shall be certified.

§131(a): Individual Room/Area Controls: Each room and area in this building is equipped with a separate switch or occupancy sensor device for each area with floor-to-ceiling walls.

§131(b): Uniform Reduction for Individual Rooms: All rooms and areas greater than 100 square feet and more than 0.8 watts per square foot of lighting load shall be controlled with bi-level switching for uniform reduction of lighting within the room.

§131(c): Daylight Area Control: All rooms with windows and skylights that are greater than 250 square feet and that allow for the effective use of daylight in the area shall have 50% of the lamps in each daylit area controlled by a separate switch; or the effective use of daylight cannot be accomplished because the windows are continuously shaded by a building on the adjacent lot. Diagram of shading during different times of the year is included on plans.

§131(c): Display Lighting. Display lighting shall be separately switched on circuits that are 20 amps or less.6.

Outdoor Lighting Measures:

§130(c)1: Mandatory lighting power determination for medium base sockets without permanently installed ballasts

§132(a): All permanently installed luminaires with lamps rated over 100 Watts either have a lamp efficacy of at least 60 lumens per Watt or are controlled by a motion sensor.

§132(b): All Luminaires with lamps rated greater than 175 Watts in hardscape area, including parking lots, building entrances, canopies, and all outdoor sales areas meet the Cutoff Requirements.

§132(c)1: All permanently installed outdoor lighting meets the control requirements listed.

§132(c): Building facades, parking lots, garages, canopies, and outdoor sales areas meet the Multi-Level Lighting Requirements listed.

EnergyPro 5.1 by EnergySoft User Number: 5056 RunCode: 2013-03-15T13:35:19 ID: S121123000 Page 6 of 12

INDOOR LIGHTING POWER ALLOWANCE LTG-3C

Project Name: *IERBYS TEMPORAQRY IMPROVEMENTS* — Date: *3/15/2013*

ALLOWED LIGHTING POWER (Chose One Method)

A Separate LTG-3C must be filled out for Conditioned and Unconditioned Spaces. Indoor Lighting Power Allowances listed on this page are only for:
☑ CONDITIONED SPACES ☐ UNCONDITIONED SPACES

COMPLETE BUILDING METHOD

BUILDING CATEGORY (From §146 Table 146-E)	WATTS PER (ft^2)	X	COMPLETE BLDG. AREA	=	ALLOWED WATTS
	TOTALS		AREA		WATTS

AREA CATEGORY METHOD

BUILDING CATEGORY (From §146 Table 146-F)	WATTS PER (ft^2)	X	Area ft^2	=	ALLOWED WATTS
Exhibit, Museum	2.00		12,866		25,732
Corridor/Restroom/Support	0.60		758		455
Convention/Conference/Meeting	1.40		1,997		2,796
Mechanical Equipment Room	0.70		79		55
	TOTALS		15,700		29,038
			AREA		WATTS

TAILORED METHOD

Total Allowed Watts using the Tailored Method taken from LTG-4C (Page 1 of 4) Row 3: 0

The indoor lighting power allowance using the Tailored Method of compliance shall be determined using the LTG-4C set of forms. A separate set of LTG-4C forms shall be filled out for CONDITIONED and UNCONDITIONED spaces

EnergyPro 5.1 by EnergySoft User Number: 5056 RunCode: 2013-03-15T13:35:19 ID: S121123000 Page 5 of 12

CERTIFICATE OF COMPLIANCE (Part 4 of 4) LTG-1C

Project Name: *IERBYS TEMPORAQRY IMPROVEMENTS* — Date: *3/15/2013*

CONDITIONED AND UNCONDITIONED SPACE LIGHTING MUST NOT BE COMBINED FOR COMPLIANCE

Indoor Lighting Power for Conditioned Spaces	Watts	Indoor Lighting Power for Unconditioned Spaces	Watts
Installed Lighting (from Conditioned LTG-1C, Page 2)	26,534	**Installed** Lighting (from Unconditioned LTG-1C, Page 2)	0
Lighting Control Credit Conditioned Spaces (from LTG-2C) -	0	Lighting Control Credit Unconditioned Spaces (from LTG-2C) -	0
Adjusted **Installed** Lighting Power =	26,534	Adjusted **Installed** Lighting Power =	0
Complies if **Installed ≤ Allowed**	↕	Complies if **Installed ≤ Allowed**	↕
Allowed Lighting Power Conditioned Spaces (from LTG-3C or PERF-1)	29,038	**Allowed** Lighting Power Unconditioned Spaces (from LTG-3C)	0

Required Acceptance Tests

Designer:
This form is to be used by the designer and attached to the plans. Listed below is the acceptance test for the Lighting system, **LTG-2A and LTG-3A**. The designer is required to check the acceptance tests and list all control devices serving the building or space shall be certified as meeting the Acceptance Requirements for Code Compliance. If all the lighting system or control of a certain type requires a test, list the different lighting and the number of systems. The NA7 Section in the Appendix of the Nonresidential Reference Appendices Manual describes the test. Since this form will be part of the plans, completion of this section will allow the responsible party to budget for the scope of work appropriately. **Forms can be grouped by type of Luminaire controlled.**

Enforcement Agency:
Systems Acceptance. Before Occupancy Permit is granted for a newly constructed building or space or when ever new lighting system with controls is installed in the building or space shall be certified as meeting the Acceptance Requirements.
The **LTG-2A and LTG-3A** forms are not considered complete forms and are not to be accepted by the enforcement agency unless the boxes are checked and/or filled and signed. In addition, a Certificate of Acceptance forms shall be submitted to the enforcement agency that certifies plans, specifications, installation certificates, and operating and maintenance information meet the requirements of §10-103(b) of Title 24 Part 6. The field inspector must receive the properly filled out and signed forms before the building can receive final occupancy. A copy of the **LTG-2A and LTG-3A** for each different lighting luminaire control(s) must be provided to the owner of the building for their records.

Equipment Requiring Testing	Description	Number of Luminaires controlled	Location	LTG-2A and LTG-3A: Controls and Sensors and Automatic Daylighting Controls Acceptance
				☐

EnergyPro 5.1 by EnergySoft User Number: 5056 RunCode: 2013-03-15T13:35:19 ID: S121123000 Page 4 of 12

Jaswinder Gill — DESIGN OVERSIGHT	DESIGN	BY ANDREW HARRINGTON	CHECKED ROBERT C. NIXDORF
03/27/13 — SIGN OFF DATE	DETAILS	BY	CHECKED
	QUANTITIES	BY	CHECKED

DESIGN DETAIL SHEET (ENGLISH) (REV. 03/14/12)

PREPARED FOR THE STATE OF CALIFORNIA DEPARTMENT OF TRANSPORTATION

ORIGINAL SCALE IN INCHES FOR REDUCED PLANS 0 1 2 3

KAREN Y. WANG — PROJECT ENGINEER

BRIDGE NO — POST MILES 2.0

UNIT: 04 — PROJECT NUMBER AND PHASE: — CONTRACT NO.: 0120F4

SAN FRANCISCO OAKLAND BAY BRIDGE EAST SPAN SEISMIC SAFETY PROJECT

IERBYS TEMPORARY IMPROVEMENTS - BUILDING

ELECTRICAL LIGHTING FIXTURE SCHEDULE AND TITLE 24 CALCULATIONS

SHEET E001

DISREGARD PRINTS BEARING EARLIER REVISION DATES — REVISION DATES — SHEET 51 OF 66

C:\Users\cschurr\Documents\56185_Gateway Park - Central_cschurr.rvt

3/27/2013 8:47:05 PM

DIST	COUNTY	ROUTE	POST MILES TOTAL PROJECT	SHEET No	TOTAL SHEETS
04	ALA	80	2.0	1204be	1204

REGISTERED ENGINEER — DATE 03/27/13

PLANS APPROVAL DATE

REGISTERED PROFESSIONAL ENGINEER — ANDREW HARRINGTON — No. E19367 — ELECTRICAL — STATE OF CALIFORNIA

The state of California or its officers or agents shall not be responsible for the accuracy or completeness of scanned copies of this plan sheet.

WSP • FLACK + KURTZ
405 HOWARD ST. #500
SAN FRANCISCO, CA 94106

CERTIFICATE OF COMPLIANCE (Part 1 of 4) OLTG-1C

Project Name	Date
IERBYS TEMPORAQRY IMPROVEMENTS	*3/15/2013*
Project Address	**Total Illuminated Area**
210 BURMA ROAD OAKLAND, CA 94607	*6,424*

GENERAL INFORMATION

Phase of Construction: ☐ New Construction ☐ Addition ☑ Alteration

Documentation Author's Declaration Statement

I certify that this Certificate of Compliance documentation is accurate and complete.

Name: *ANDREW HARRINGTON*	Signature: (signed)
Company: *WSP Flack+Kurtz*	Date: *3/15/2013*
Address: *405 HOWARD ST STE 500*	CEA # CEPE #
City/State/Zip: *SAN FRANCISCO, CA 94105*	Phone: *(415) 398-3833*

Principal Lighting Designer's Declaration Statement

- I am eligible under Division 3 of the California Business and Professional Code to accept responsibility for the lighting design.
- This Certificate of Compliance identifies the lighting features and performance specifications required for compliance with Title 24, Pages 1 and 6 of the California Code of Regulations.
- The design features represented on this Certificate of Compliance are consistent with the information provided to document this design on the other applicable compliance forms, worksheets, calculations, plans and specifications submitted to the enforcement agency for approval with this building permit application.

Name: *ANDREW HARRINGTON*	Signature: (signed)
Company: *WSP FLACK + KURTZ*	Phone: *415.398.3833*
Address: *405 HOWARD STREET*	License #: E19367
City/State/Zip: *SAN FRANCISCO , CA 94105*	Date: 02/15/2013

Principal Lighting Designer's Declaration

☑ I certify that this Certificate of Compliance documentation is accurate and complete, and accounts for all outdoor lighting power, including building mounted, pole mounted, as well as all other lighting designed for the site, and that Additional Lighting Power Allowances for Specific Applications or Additional Lighting Power Allowances for Ordinance Requirements have not been counted more than one time for the same area, in accordance with Section 147 of the Standards.

Outdoor Lighting Mandatory Measures
Indicate location on building plans of Mandatory Measures Note Block: E001

LIGHTING COMPLIANCE FORMS & WORKSHEETS (check box if worksheets is included)

For detailed instructions on the use of this and all Energy Efficiency Standards compliance forms; please refer to the Nonresidential Manual published by the California Energy Commission.

☑	OLTG-1C	Certificate of Compliance. All 4 pages required on plans for all submittals.
☑	OLTG-2C	(Pages 1 of 3) Lighting Wattage Allowances for General Hardscape, Sales Frontage, or Ornamental Lighting. Optional on plans.
☑	OLTG-2C	(Pages 2 of 3) Lighting Wattage Allowance for Per Application or Per Area. Optional on plans.
☐	OLTG-2C	(Pages 3 of 3) Additional Lighting Power Allowance for Ordinance Requirements. Optional on plans.

EnergyPro 5.1 by EnergySoft *User Number: 5056* ***RunCode: 2013-03-15T13:35:19*** *ID: S121123000* *Page 7 of 12*

CERTIFICATE OF COMPLIANCE (Part 2 of 4) OLTG-1C

Project Name	Date
IERBYS TEMPORAQRY IMPROVEMENTS	*3/15/2013*

COMPLIANCE FIXTURE / LIGHTING CONTROL SCHEDULE and FIELD INSPECTION CHECKLIST

INSTALLATION CERTIFICATE, OLTG-1INST (Retain a copy and verify form is completed and signed.) **Field Inspection** ☐

CERTIFICATE OF ACCEPTANCE, OLTG-2A (Retain a copy and verify form is completed and signed.) **Field Inspection** ☐

Luminaire Schedule			Installed Watts							
A	B	C	D	E	F		G	H	I	
					How wattage was determined				Field Inspector[2]	
Name or Item Tag	Luminaire Description[1] See footnote below (i.e.: 1 lamp pole-top shoe-box 400 watt metal halide)	Cutoff Designation	Watts per Luminaire	Special Features	Default from NA-8	According to §130 (D or E)	Number of Luminaires	Installed Watts (D X G)	Pass	Fail
POLE LT	*POLE LT - POLE MTD LIGHT TO BE SPECIFIED - 300|*		*300.0*	☐	☑	☐	*4*	*1,200*	☐	☐
FX1	*EXISTING - Medium Base Pendant Fixture*		*60.0*	☐	☑	☐	*6*	*360*	☐	☐
FX2	*FX2 - Linear LED Light w/ 96W Driver*		*96.0*	☐	☑	☐	*1*	*96*	☐	☐
				☐	☐	☐			☐	☐
				☐	☐	☐			☐	☐
				☐	☐	☐			☐	☐
				☐	☐	☐			☐	☐
				☐	☐	☐			☐	☐
				☐	☐	☐			☐	☐
Enter total into OLTG-1C; Page 4 of 4: Row H; Total Installed Watts:								*1,656*		

1. Type of luminaire (i.e.: post top, wall pack, surface, shoe box); for non-incandescent luminaires, indicate nominal lamp wattage and lamp type (i.e.: fluorescent, incandescent, HID); ballast type (i.e.: electronic or magnetic); number of lamps and number of ballasts per luminaire. For incandescent luminaires, the luminaire wattage listed in column D shall be the maximum relamping rated wattage on a permanent factory-installed label on the luminaire, NOT the wattage of the lamp (bulb) used, in accordance with Section 130(d or e).
2. If Fail then describe on Page 2 of the Inspection Checklist Form and take appropriate action to correct. Verify building plans if necessary.

EXEMPT LUMINAIRES **Field Inspection** ☐

Name or Symbol	Description of exempt luminaires in accordance with §147

MANDATORY CONTROLS **Field Inspection** ☐

#	Description	Location	#	Description	Location

SPECIAL FEATURES INSPECTION CHECKLIST (See Page 2 of 4 of OLTG-1C)

The local enforcement agency should pay special attention to the items specified in this checklist. These items require special written justification and documentation, and special verification. The local enforcement agency determines the adequacy of the justification, and may reject a building or design that otherwise complies based on the adequacy of the special justification and documentation submitted.

Filed Inspector Notes or Discrepancies:

EnergyPro 5.1 by EnergySoft *User Number: 5056* ***RunCode: 2013-03-15T13:35:19*** *ID: S121123000* *Page 8 of 12*

CERTIFICATE OF COMPLIANCE (Part 3 of 4) OLTG-1C

Project Name	Date
IERBYS TEMPORAQRY IMPROVEMENTS	*3/15/2013*

A. OUTDOOR LIGHTING ZONE

OUTDOOR LIGHTING ZONE: ☐ OLZ 1 ☐ OLZ 2 ☑ OLZ 3 ☐ OLZ 4

Is the Outdoor Lighting Zone: ☑ Default in accordance with §10-114, or ☐ Amended by JHA

Complete the information below if the default Outdoor Lighting Zone has been amended by the local jurisdiction having authority (JHA):

☐ The site is a government designated park, recreational area, wildlife preserve, or portion thereof, and has been designated as LZ2 or LZ3, in accordance with Table 10-114-A, because the site is contained within such a zone.

☐ The local jurisdiction having authority has officially adopted a change to the State Default Lighting Zone and has notified the Energy Commission by providing the materials required in §10-114(d) to the Executive Director.

☐ The adopted change is posted on the Energy Commission website.

B. ADDITIONAL LIGHTING POWER ALLOWANCE FOR ORDINANCE REQUIREMENTS

Are additional lighting power allowances for ordinance in Table 147-C used? ☐ Yes ☑ No

Complete the information below if additional lighting power allowances for ordinance requirements are used:

☐ The local jurisdiction having authority has officially adopted specific outdoor light levels, which are expressed as average or minimum footcandle levels, by following a public process that allowed for formal public notification, review, and comment about the proposed change.

☐ The local jurisdiction having authority which adopted specific outdoor light levels and has notified the Commission by providing the following materials required §10-114(f) to the Executive Director.

C. ACCEPTANCE FORMS

Required Acceptance Tests

Designer:

This form is to be used by the designer and attached to the plans. Listed below is the acceptance test for the Lighting system, **OLTG-2A**. The designer is required to check the acceptance tests and list all control devices serving the building or space shall be certified as meeting the Acceptance Requirements for Code Compliance. If all the lighting system or control of a certain type requires a test, list the different lighting and the number of systems. The NA7 Section in the Appendix of the Nonresidential Reference Appendices Manual describes the test. Since this form will be part of the plans, completion of this section will allow the responsible party to budget for the scope of work appropriately. **Forms can be grouped by type of Luminaire controlled.**

Enforcement Agency:

Systems Acceptance. Before Occupancy Permit is granted for a newly constructed building or space or when ever new lighting system with controls is installed in the building or space shall be certified as meeting the Acceptance Requirements.
The **OLTG-2A** form is not considered a complete form and is not to be accepted by the enforcement agency unless the boxes are checked and/or filled and signed. In addition, a Certificate of Acceptance forms shall be submitted to the enforcement agency that certifies plans, specifications, installation certificates, and operating and maintenance information meet the requirements of §10-103(b) of Title 24 Part 6. The field inspector must receive the properly filled out and signed forms before the building can receive final occupancy. A copy of the **OLTG-2A** for each different lighting luminaire control(s) must be provided to the owner of the building for their records.

				Certificate of Acceptance
	Luminaires Controlled			OLTG-2A[1]
Equipment Requiring Testing	Description	Qty. of Like Controls	Location	Outdoor Lighting Acceptance Tests

1. Insert: **OMS** for Outdoor Motion Sensor; **OLSC** for Outdoor Lighting Shutoff Controls; **OP** for Outdoor Photocontrol; **ATS** for Astronomical Time Switch; and, **STS** for Standard (non-astronomical) Time Switch acceptance.

EnergyPro 5.1 by EnergySoft *User Number: 5056* ***RunCode: 2013-03-15T13:35:19*** *ID: S121123000* *Page 9 of 12*

CERTIFICATE OF COMPLIANCE (Part 4 of 4) OLTG-1C

Project Name	Date
IERBYS TEMPORAQRY IMPROVEMENTS	*3/15/2013*

ALLOWED AND INSTALLED OUTDOOR LIGHTING POWER

		Lighting Wattage Power Allowance
A	Lighting power allowance for general hardscape (from OLTG-2C Page 1 of 3)	*1,694*
B	Specific application lighting wattage allowance per unit length (from OLTG-2C Page 1 of 3)	*0*
C	Specific application lighting wattage allowance for ornamental lighting (from OLTG-2C Page 1 of 3)	*0*
D	Specific application lighting wattage allowance per application (from OLTG-2C Page 2 of 3)	*156*
E	Specific application lighting wattage allowance per area (from OLTG-2C Page 2 of 3)	*0*
F	Specific application lighting wattage allowance for ordinance requirements (from OLTG-2C Page 3 of 3)	*0*
G	Total Allowed Wattage = Sum of rows A through F:	*1,850*
H	Total installed watts (from Compliance Fixture Schedule, (from OLTG-2C Page 1 of 3)	*1,656*
Complies if wattage in row H is less than or equal to the wattages in row G		☑ Yes ☐ No

EnergyPro 5.1 by EnergySoft *User Number: 5056* ***RunCode: 2013-03-15T13:35:19*** *ID: S121123000* *Page 10 of 12*

OUTDOOR LIGHTING WORKSHEET (Part 1 of 3) OLTG-2C

Project Name	Date
IERBYS TEMPORAQRY IMPROVEMENTS	*3/15/2013*

A. LIGHTING POWER ALLOWANCE FOR GENERAL HARDSCAPE

AREA WATTAGE ALLOWANCE (AWA)			LINEAR WATTAGE ALLOWANCE (LWA)			INITIAL WATTAGE ALLOWANCE	TOTAL GENERAL HARDSCAPE LIGHTING ALLOWANCE
A	B	C	D	E	F	G	H
Illuminated Hardscape Area	AWA Per Square Foot	AWA (A X B)	Perimeter Length of General Hardscape	LWA Per Linear Foot	LWA (D X E)	IWA (Watts)	C + F + G
6,424	*0.092*	*591*	*362*	*0.920*	*333*	*770*	*1,694*
Enter total into OLTG-1C; Page 4 of 4; Row A; Lighting Power Allowance for General Hardscape							*1,694*

☑ **Yes AWA, LWA, and IWA from Table 147-A was used as appropriate for the Outdoor Lighting Zone**

B. SPECIFIC APPLICATION LIGHTING WATTAGE ALLOWANCE PER UNIT LENGTH (Available only for sales frontage)

DETERMINE WATTAGE ALLOWANCE				LUMINAIRE TYPE		DESIGN WATTS			
A	B	C	D	E	F	G	H	I	J
Specific Lighting Application	Linear Foot of Frontage	Sales Frontage Allowance for OLZ (Watts per LF)	Wattage Allowance (B X C)	Name or Symbol	Luminaire Type	Lumin QTY	Watts Per Luminaire	Design Watts (G X H)	Allowed Watts Minimum of D or I
Enter total into OLTG-1C; Page 4 of 4; Row B; Specific Application Lighting Wattage Allowance Per Unit Length									*0*

C. SPECIFIC APPLICATION WATTAGE ALLOWANCE FOR ORNAMENTAL LIGHTING

DETERMINE WATTAGE ALLOWANCE				LUMINAIRE TYPE		DESIGN WATTS			
A	B	C	D	E	F	G	H	I	J
Specific Lighting Application	Square feet of Harscape	Ornamental Lighting Allowance for OLZ (Watts per ft²)	Wattage Allowance (B X C)	Name or Symbol	Luminaire Type	Lumin QTY	Watts Per Luminaire	Design Watts (G X H)	Allowed Watts Minimum of D or I
Enter total into OLTG-1C; Page 4 of 4; Row C; Specific Application Wattage for Ornamental Lighting									*0*

EnergyPro 5.1 by EnergySoft *User Number: 5056* ***RunCode: 2013-03-15T13:35:19*** *ID: S121123000* *Page 11 of 12*

OUTDOOR LIGHTING WORKSHEET (Part 2 of 3) OLTG-2C

Project Name	Date
IERBYS TEMPORAQRY IMPROVEMENTS	*3/15/2013*

D. SPECIFIC APPLICATION LIGHTING WATTAGE ALLOWANCE PER APPLICATION

DETERMINE WATTAGE ALLOWANCE				DESIGN WATTS					ALLOWANCE
A	B	C	D	E	F	G	H	I	J
Specific Lighting Application	Number of Applications	Specific Application Allowance (watts)	Wattage Allowance (B X C)	Luminaire Symbol	Luminaire Type	Lumin QTY	Watts Per Luminaire	Design Watts (G X H)	Allowed Watts Minimum of D or I
BUILDING ENTRANCE	*2*	*100*	*200*	*FX2*	*FX2 - Linear LED Light w/ 96W Driver*	*1*	*96.0*	*96*	*156*
				FX1	*EXISTING - Medium Base Pendant Fixt*	*1*	*60.0*	*60*	
Enter total into OLTG-1C; Page 4 of 4; Row D; Specific Application Wattage Allowance Per Application									*156*

E. SPECIFIC APPLICATION LIGHTING WATTAGE ALLOWANCE PER AREA

DETERMINE WATTAGE ALLOWANCE				LUMINAIRE TYPE		DESIGN WATTS			
A	B	C	D	E	F	G	H	I	J
Specific Lighting Application	Illuminated Area of Application	Specific Application Allowance (watts per ft²)	Wattage Allowance (B X C)	Code for Luminaire Type	Luminaire Type	Lumin QTY	Watts Per Luminaire	Design Watts (G X H)	Allowed Watts Minimum of D or I
Enter total into OLTG-1C; Page 4 of 4; Row E; Specific Application Lighting Wattage Allowance Per Area									*0*

EnergyPro 5.1 by EnergySoft *User Number: 5056* ***RunCode: 2013-03-15T13:35:19*** *ID: S121123000* *Page 12 of 12*

3/27/2013 8:47:15 PM

SAN FRANCISCO OAKLAND BAY BRIDGE
EAST SPAN SEISMIC SAFETY PROJECT

Jaswinder Gill **DESIGN OVERSIGHT** 03/27/13 **SIGN OFF DATE**	**DESIGN**	BY ANDREW HARRINGTON	CHECKED ROBERT C. NIXDORF	PREPARED FOR THE STATE OF CALIFORNIA DEPARTMENT OF TRANSPORTATION	KAREN Y. WANG PROJECT ENGINEER
	DETAILS	BY	CHECKED		
	QUANTITIES	BY	CHECKED		

BRIDGE NO	IERBYS TEMPORARY IMPROVEMENTS - BUILDING	SHEET
POST MILES 2.0	ELECTRICAL TITLE 24 CALCULATIONS	E002

DESIGN DETAIL SHEET (ENGLISH) (REV. 03/14/12)

ORIGINAL SCALE IN INCHES FOR REDUCED PLANS 0 1 2 3

UNIT: 04
PROJECT NUMBER AND PHASE:
CONTRACT NO.: 0120F4

DISREGARD PRINTS BEARING EARLIER REVISION DATES

REVISION DATES	SHEET	OF
___ ___ ___ ___	52	66

C:\Users\cschurr\Documents\56185_Gateway Park - Central_cschurr.rvt

DIST	COUNTY	ROUTE	POST MILES TOTAL PROJECT	SHEET No	TOTAL SHEETS
04	ALA	80	2.0	1204bf	1204

REGISTERED ENGINEER 03/27/13 DATE

PLANS APPROVAL DATE

REGISTERED PROFESSIONAL ENGINEER ANDREW HARRINGTON No. E19367 ELECTRICAL STATE OF CALIFORNIA

The state of California or its officers or agents shall not be responsible for the accuracy or completeness of scanned copies of this plan sheet.

WSP • FLACK + KURTZ
405 HOWARD ST. #500
SAN FRANCISCO, CA 94106

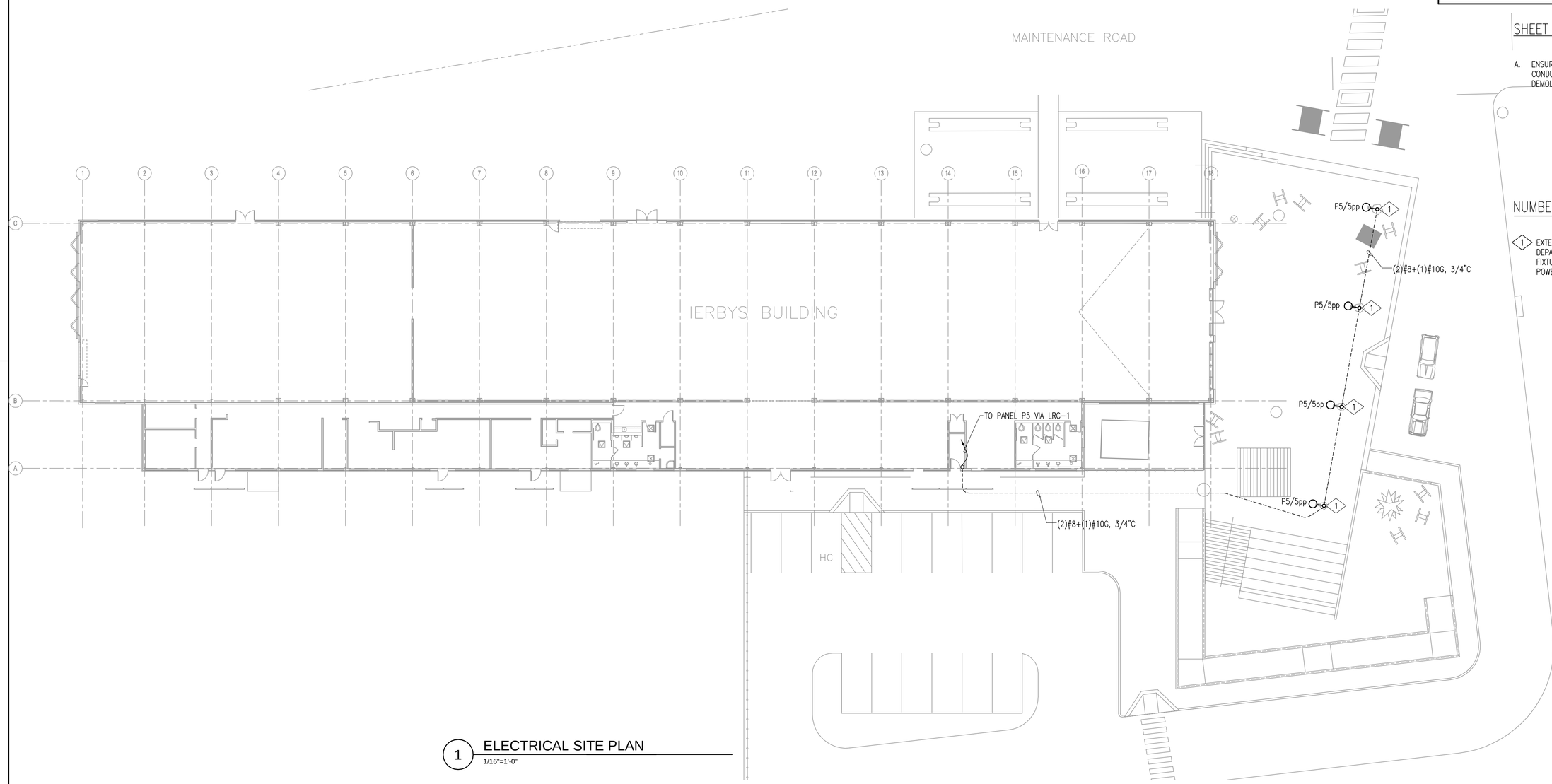

1 ELECTRICAL SITE PLAN
1/16"=1'-0"

SHEET NOTES

A. ENSURE THAT EXISTING UNDERGROUND CONDUITS AND CONDUCTORS TO BE REUSED ARE PROTECTED DURING DEMOLITION.

NUMBERED NOTES

1. EXTERIOR POLE MOUNTED FIXTURE PER CALIFORNIA DEPARTMENT OF TRANSPORTATION SPECIFICATIONS. FIXTURE TO BE COMPATIBLE WITH 120VAC INPUT POWER AND LESS THAN OR EQUAL TO 300W.

N

3/27/2013 8:47:28 PM

SAN FRANCISCO OAKLAND BAY BRIDGE EAST SPAN SEISMIC SAFETY PROJECT

IERBYS TEMPORARY IMPROVEMENTS - BUILDING

ELECTRICAL SITE PLAN

SHEET E100

Jaswinder Gill
DESIGN OVERSIGHT

03/27/13
SIGN OFF DATE

	BY	CHECKED
DESIGN	ANDREW HARRINGTON	ROBERT C. NIXDORF
DETAILS	BY	CHECKED
QUANTITIES	BY	CHECKED

PREPARED FOR THE STATE OF CALIFORNIA DEPARTMENT OF TRANSPORTATION

KAREN Y. WANG
PROJECT ENGINEER

BRIDGE NO

POST MILES 2.0

DESIGN DETAIL SHEET (ENGLISH) (REV. 03/14/12)

ORIGINAL SCALE IN INCHES FOR REDUCED PLANS 0 1 2 3

UNIT: 04
PROJECT NUMBER AND PHASE: CONTRACT NO.: 0120F4

DISREGARD PRINTS BEARING EARLIER REVISION DATES

REVISION DATES ___ ___ ___ ___

SHEET 53 OF 66

C:\Users\cschurr\Documents\56185_Gateway Park - Central_cschurr.rvt

DIST	COUNTY	ROUTE	POST MILES TOTAL PROJECT	SHEET No	TOTAL SHEETS
04	ALA	80	2.0	1204bg	1204

REGISTERED ENGINEER 03/27/13 DATE

PLANS APPROVAL DATE

REGISTERED PROFESSIONAL ENGINEER ANDREW HARRINGTON No. E19367 ELECTRICAL STATE OF CALIFORNIA

The state of California or its officers or agents shall not be responsible for the accuracy or completeness of scanned copies of this plan sheet.

WSP • FLACK + KURTZ
405 HOWARD ST. #500
SAN FRANCISCO, CA 94106

SHEET NOTES

A. RELOCATE OR REMOVE, AS APPROPRIATE, EXISTING CONDUIT CROSSING DOORS OR OPERABLE WINDOWS ON EXTERIOR OF BUILDING, AS REQUIRED TO ALLOW FULL RANGE OF OPERATION. CONFIRM REQUIREMENTS ON SITE WITH ARCHITECT.

NUMBERED NOTES

1. THREE (3) EXISTING SINGLE-PHASE, 100KVA TRANSFORMERS AND ASSOCIATED CONDUCTORS AND EQUIPMENT TO REMAIN.
2. ALL EXISTING EQUIPMENT IN THIS ROOM TO REMAIN, UON.

1 DEMOLITION FLOOR PLAN
1/8"=1'-0"

N

3/27/2013 8:47:39 PM

SAN FRANCISCO OAKLAND BAY BRIDGE
EAST SPAN SEISMIC SAFETY PROJECT

IERBYS TEMPORARY IMPROVEMENTS - BUILDING

ELECTRICAL DEMOLITION PLAN

SHEET E101

Jaswinder Gill
DESIGN OVERSIGHT

03/27/13
SIGN OFF DATE

	BY	CHECKED
DESIGN	ANDREW HARRINGTON	ROBERT C. NIXDORF
DETAILS	BY	CHECKED
QUANTITIES	BY	CHECKED

PREPARED FOR THE STATE OF CALIFORNIA DEPARTMENT OF TRANSPORTATION

KAREN Y. WANG
PROJECT ENGINEER

BRIDGE NO

POST MILES 2.0

DESIGN DETAIL SHEET (ENGLISH) (REV. 03/14/12)

ORIGINAL SCALE IN INCHES FOR REDUCED PLANS 0 1 2 3

UNIT: 04
PROJECT NUMBER AND PHASE:
CONTRACT NO.: 0120F4

DISREGARD PRINTS BEARING EARLIER REVISION DATES

REVISION DATES

SHEET 54 OF 66

C:\Users\cschurr\Documents\56185_Gateway Park - Central_cschurr.rvt

DIST	COUNTY	ROUTE	POST MILES TOTAL PROJECT	SHEET No	TOTAL SHEETS
04	ALA	80	2.0	1204bh	1204

REGISTERED ENGINEER — DATE 03/27/13

PLANS APPROVAL DATE

The state of California or its officers or agents shall not be responsible for the accuracy or completeness of scanned copies of this plan sheet.

REGISTERED PROFESSIONAL ENGINEER ANDREW HARRINGTON No. E19367 ELECTRICAL STATE OF CALIFORNIA

WSP • FLACK + KURTZ
405 HOWARD ST. #500
SAN FRANCISCO, CA 94106

SHEET NOTES

A. ALL EQUIPMENT AND DEVICES SHOWN ON THIS DRAWING ARE NEW (N), UON.

B. VERIFY EXACT LOCATION AND MOUNTING HEIGHT OF ALL DEVICES WITH ARCHITECT, PRIOR TO INSTALLATION.

C. PROVIDE CONDUIT AND WIRE FOR CIRCUITING SHOWN

D. FIELD VERIFY AVAILABLE SPARE CIRCUIT BREAKERS IN PANEL #1 AFTER DEMOLITION IS COMPLETE AND ADJUST CIRCUIT NUMBERS FOR NEW CIRCUITS AS REQUIRED.

E. TERMINATE ALL TELECOM CONDUIT AT TELECOMMUNICATIONS BACKBOARD IN ELECTRICAL ROOM. COORDINATE EXACT LOCATION WITH ARCHITECT PRIOR TO INSTALLATION.

F. PROVIDE NEW FIRE ALARM CONNECTIONS TO EXISTING WATER FLOW AND TAMPER SWITCHES TO EXISTING EXTERIOR FIRE ALARM BELL. VERIFY EXACT LOCATIONS IN THE FIELD.

13. PROVIDE A 120V, 250VA, SINGLE PHASE, UL924 LISTED EMERGENCY LIGHTING INVERTER, DUAL-LITE MODEL LG2S, OR APPROVED EQUAL. CONNECT

7. PROVIDE A 120V, 250VA, SINGLE PHASE, UL924 LISTED EMERGENCY LIGHTING INVERTER, DUAL-LITE MODEL LG2S, OR APPROVED EQUAL. CONNECT TO CIRCUIT 9nn(EM) SERVING EXTERIOR EGRESS LIGHTING. SEE SHEET E301. CONNECT LIGHTING CIRCUIT/INVERTER AS EXTERNALLY SWITCHED LOAD PER MANUFACTURER WIRING INSTRUCTIONS.

8. LOCATE FLOOR BOXES PER ARCHITECTURAL DRAWINGS, SHEET A201.

9. PROVIDE 120VAC CONNECTION TO EACH TOUCHLESS FAUCET. MOUNT OUTLET BOXES TO BOTTOM OF COUNTER BEHIND SINKS, AND ROUTE CONDUIT FROM SIDE WING WALL ADJACENT TO ACCESSIBLE STALL.

10. PROVIDE WEATHERPROOF JUNCTION BOX UNDER SLAB AT THIS LOCATION, IN TRENCH, FOR INSTALLATION OF LOW VOLTAGE CABLING BY OTHERS. PROVIDE 1"EC FROM THIS BOX TO LOW VOLTAGE COMPARTMENT OF EACH FLOOR BOX IN THIS TRENCH. UP TO TWO (2) FLOOR BOXES MAY BE DAISY-CHAINED AND SERVED WITH A SINGLE 1" CONDUIT.

11. LOCATE AT AN ACCESSIBLE LOCATION ABOVE CEILING.

12. PROVIDE 4'X8' TELECOMMUNICATION BACKBOARD.

1. THREE (3) EXISTING SINGLE-PHASE, 100KVA TRANSFORMERS.

2. ELECTRICAL ROOM. ALL EXISTING POWER DEVICES AND EQUIPMENT IN THIS ROOM TO REMAIN, UON.

3. PROVIDE 120V, 1ø CONNECTION TO CEILING MOUNTED UNIT HEATER (UH-1-1 THROUGH UH-1-6. REFER TO ARCHITECTURAL DRAWINGS FOR CONDUIT ROUTING.

4. EXISTING 125A/3P ENCLOSED CIRCUIT BREAKER, PREVIOUSLY SERVING EQUIPMENT IN THE STEEL SHOP. REUSE THIS CIRCUIT BREAKER, AND CONNECT TO NEW FEEDER TO PANEL P5, PER PARTIAL RISER DIAGRAM.

5. EXISTING SPARE 100 AMP FRAME DISCONNECT SWITCH, NO FUSE. PROVIDE A NEW 80 AMP FUSE AND CONNECT TO NEW CONDENSING UNIT, PER PARTIAL RISER DIAGRAM.

6. PROVIDE A WEATHERPROOF (NEMA 3R) GUTTER OR JUNCTION BOX AS REQUIRED TO TAP FEEDER AND SERVE MECHANICAL UNITS, PER PARTIAL RISER DIAGRAM. MOUNT DISCONNECTS AND GUTTER TO UNISTRUT SUPPORT FIXED TO THE GROUND, IN ORDER TO MINIMIZE DISTURBANCE TO THE ASBESTOS WALL MATERIAL.

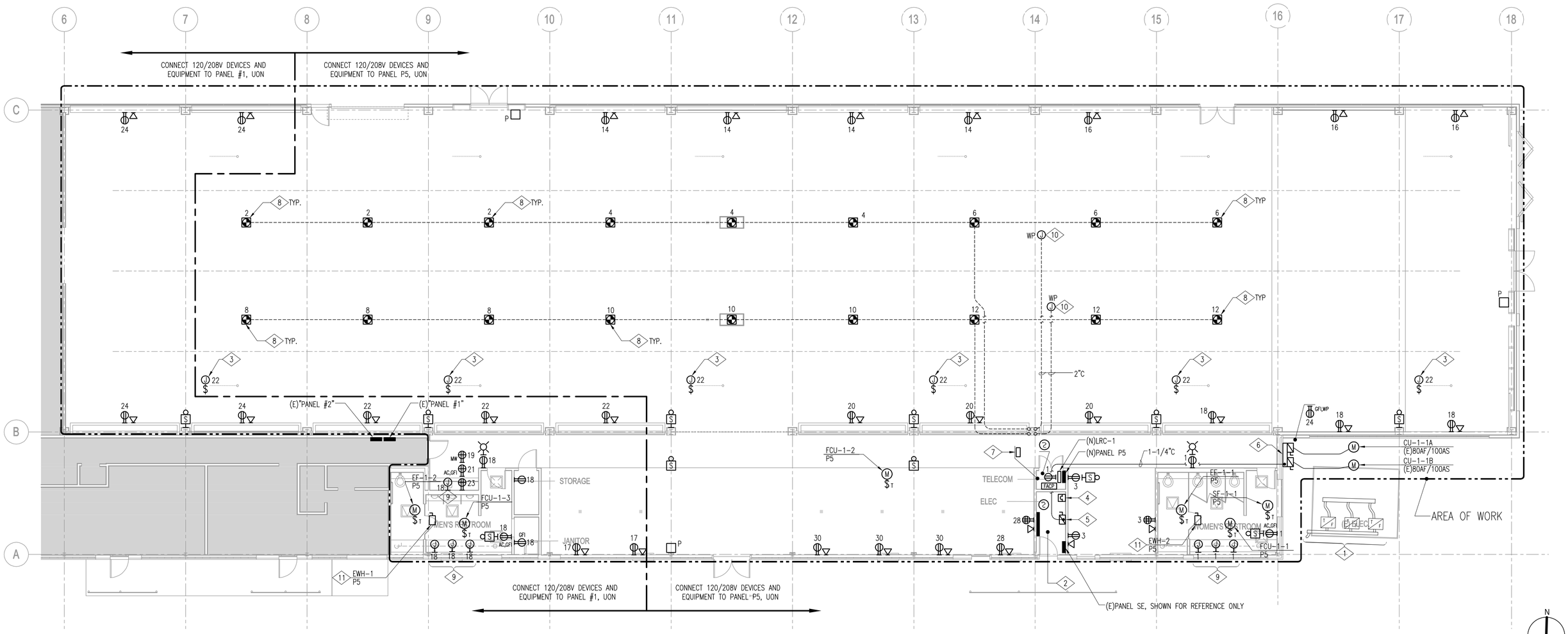

1 CONSTRUCTION FLOOR PLAN
1/8"=1'-0"

3/27/2013 8:47:46 PM

SAN FRANCISCO OAKLAND BAY BRIDGE EAST SPAN SEISMIC SAFETY PROJECT

IERBYS TEMPORARY IMPROVEMENTS - BUILDING

ELECTRICAL CONSTRUCTION FLOOR PLAN - POWER

SHEET E201

Jaswinder Gill — DESIGN OVERSIGHT
03/27/13 — SIGN OFF DATE

	BY	CHECKED
DESIGN	ANDREW HARRINGTON	ROBERT C. NIXDORF
DETAILS	BY	CHECKED
QUANTITIES	BY	CHECKED

PREPARED FOR THE STATE OF CALIFORNIA DEPARTMENT OF TRANSPORTATION

KAREN Y. WANG — PROJECT ENGINEER

BRIDGE NO

POST MILES 2.0

DESIGN DETAIL SHEET (ENGLISH) (REV. 03/14/12)

ORIGINAL SCALE IN INCHES FOR REDUCED PLANS 0 1 2 3

UNIT: 04
PROJECT NUMBER AND PHASE:
CONTRACT NO.: 0120F4

DISREGARD PRINTS BEARING EARLIER REVISION DATES

REVISION DATES

SHEET 55 OF 66

C:\Users\cschurr\Documents\56185_Gateway Park - Central_cschurr.rvt

DIST	COUNTY	ROUTE	POST MILES TOTAL PROJECT	SHEET No	TOTAL SHEETS
04	ALA	80	2.0	1204bi	1204

REGISTERED ENGINEER — DATE 03/27/13

PLANS APPROVAL DATE

REGISTERED PROFESSIONAL ENGINEER ANDREW HARRINGTON No. E19367 ELECTRICAL STATE OF CALIFORNIA

The state of California or its officers or agents shall not be responsible for the accuracy or completeness of scanned copies of this plan sheet.

WSP • FLACK + KURTZ
405 HOWARD ST. #500
SAN FRANCISCO, CA 94106

SHEET NOTES

A. VERIFY EXACT LOCATION AND MOUNTING HEIGHTS FOR ALL LUMINAIRES AND CONTROLS WITH ARCHITECT PRIOR TO INSTALLATION.

B. PROVIDE A COMPLETE CONDUIT AND CONDUCTOR SYSTEM FOR THE COMPLETE POWER AND LIGHTING CONTROL SYSTEM SHOWN.

C. CONNECT ALL 120/208V LIGHTING TO NEW PANEL P5, VIA CONTROLS INDICATED.

D. DOUBLE LETTER CONTROL ZONE ("xx") INDICATES CONTROL VIA PROGRAMMABLE LIGHTING CONTROL RELAY.

E. SINGLE LETTER CONTROL ZONE ("x") INDICATES LOCAL/LINE VOLTAGE CONTROL.

F. PROVIDE LOW VOLTAGE SWITCHES WITH A SEPARATE ON/OFF BUTTON FOR EACH CONTROL ZONE SHOWN, PLUS A MASTER ON/OFF BUTTON.

NUMBERED NOTES

1. PROVIDE POWER CONNECTION TO EXTERIOR ILLUMINATED SIGNAGE. CONFIRM EXACT MOUNTING AND INSTALLATION REQUIREMENTS WITH ARCHITECT PRIOR TO INSTALLATION.
2. PROVIDE A DIMMER FOR EACH OF THE FOLLOWING CONTROL ZONES: a, b, c, d, e, f, g, h, j. FOR EACH DIMMER, PROVIDE A POWER MODULE INTERFACE AS REQUIRED TO EXPAND THE ELV TYPE DIMMING CAPACITY OF EACH CIRCUIT TO 16 AMPS OF CONNECTED LOAD. USE 3-WIRE TYPE DIMMERS AND LUTRON PHPM-WBX INTERFACE MODULES, OR APPROVED EQUAL. LOCATE INTERFACE MODULES AT A CONCEALED AND ACCESSIBLE LOCATION INSIDE FRAMED ARCHITECTURAL ELEMENTS.
3. PHOTOCELL SHALL TURN OFF SOME OR ALL OF ZONES INDICATED, PER TITLE 24, WHEN SUFFICIENT AMBIENT NATURAL LIGHT IS AVAILABLE. COORDINATE OPTIMAL LOCATION, CALIBRATION, AND PROGRAMMING OF PHOTOCELL WITH ARCHITECT AND VENDOR.
4. PROVIDE LOW VOLTAGE OVERRIDE SWITCH FOR EXTERIOR LIGHTING.
5. CONNECT EMERGENCY EGRESS EXTERIOR FIXTURE VIA LIGHTING INVERTER IN ELECTRICAL CLOSET. WIRE FIXTURE TO INVERTER AS AN "EXTERNALLY SWITCHED LOAD." UNDER NORMAL CONDITIONS, FIXTURE SHALL TURN ON AND OFF WITH PROGRAMMABLE RELAY. UPON UTILITY POWER LOSS, FIXTURE SHALL AUTOMATICALLY ILLUMINATE TO FULL BRIGHTNESS.
6. PROVIDE BATTERY BACKUP BALLAST FOR THIS FIXTURE, BODINE MODEL B75C OR APPROVED EQUAL. COORDINATE EXACT MOUNTING LOCATION OF BALLAST WITH ARCHITECT PRIOR TO INSTALLATION.

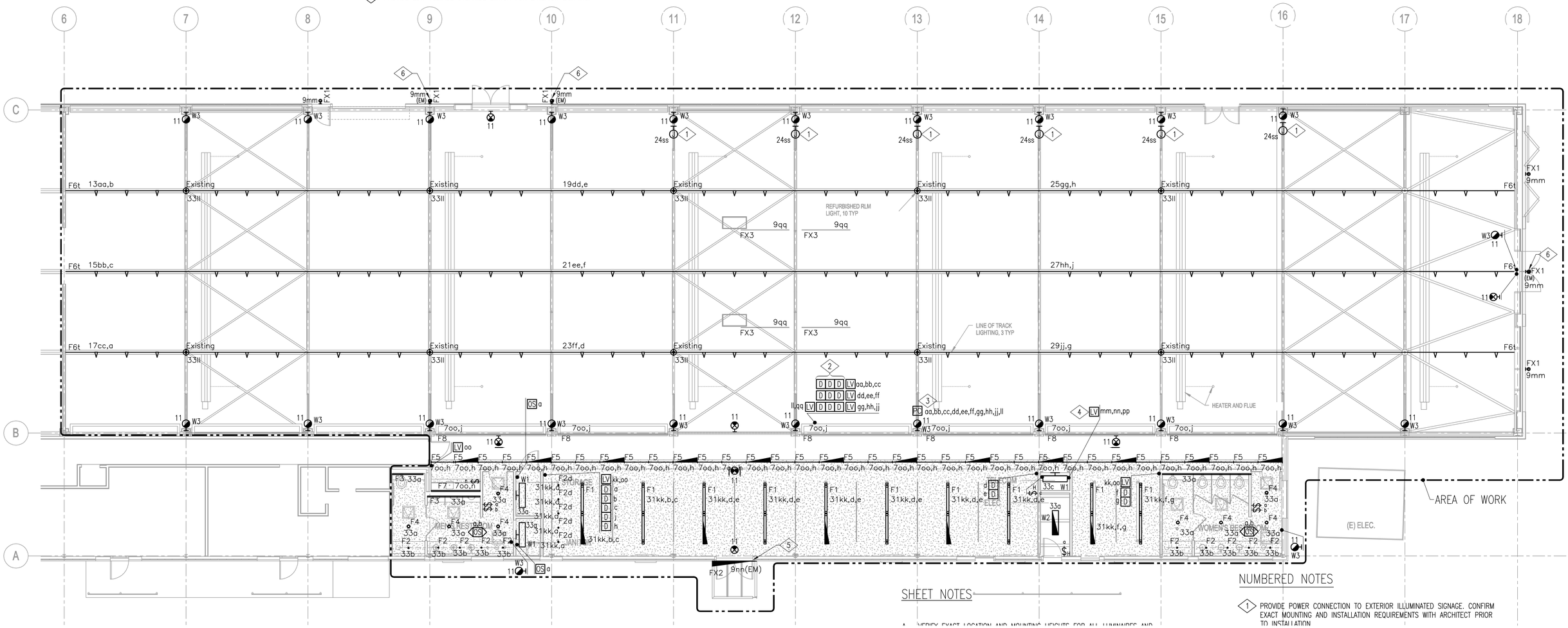

SHEET NOTES

A. VERIFY EXACT LOCATION AND MOUNTING HEIGHTS FOR ALL LUMINAIRES AND

NUMBERED NOTES

1. PROVIDE POWER CONNECTION TO EXTERIOR ILLUMINATED SIGNAGE. CONFIRM EXACT MOUNTING AND INSTALLATION REQUIREMENTS WITH ARCHITECT PRIOR TO INSTALLATION.

1 CONSTRUCTION FLOOR PLAN
1/8"=1'-0"

3/27/2013 8:47:51 PM

SAN FRANCISCO OAKLAND BAY BRIDGE
EAST SPAN SEISMIC SAFETY PROJECT

IERBYS TEMPORARY IMPROVEMENTS - BUILDING

ELECTRICAL CONSTRUCTION FLOOR PLAN - LIGHTING

SHEET E301

Jaswinder Gill
DESIGN OVERSIGHT

03/27/13
SIGN OFF DATE

	BY	CHECKED
DESIGN	ANDREW HARRINGTON	ROBERT C. NIXDORF
DETAILS	BY	CHECKED
QUANTITIES	BY	CHECKED

PREPARED FOR THE STATE OF CALIFORNIA DEPARTMENT OF TRANSPORTATION

KAREN Y. WANG
PROJECT ENGINEER

BRIDGE NO
POST MILES 2.0

DESIGN DETAIL SHEET (ENGLISH) (REV. 03/14/12)

ORIGINAL SCALE IN INCHES FOR REDUCED PLANS 0 1 2 3

UNIT: 04
PROJECT NUMBER AND PHASE:
CONTRACT NO.: 0120F4

DISREGARD PRINTS BEARING EARLIER REVISION DATES

REVISION DATES

SHEET 56 OF 66

C:\Users\cschurr\Documents\56185_Gateway Park - Central_cschurr.rvt

DIST	COUNTY	ROUTE	POST MILES TOTAL PROJECT	SHEET No	TOTAL SHEETS
04	ALA	80	2.0	1204bj	1204

REGISTERED ENGINEER — DATE 03/27/13

PLANS APPROVAL DATE

REGISTERED PROFESSIONAL ENGINEER ANDREW HARRINGTON No. E19367 ELECTRICAL STATE OF CALIFORNIA

The state of California or its officers or agents shall not be responsible for the accuracy or completeness of scanned copies of this plan sheet.

WSP • FLACK + KURTZ
405 HOWARD ST. #500
SAN FRANCISCO, CA 94106

WIRING SCHEDULE – COPPER CONDUCTORS (0–600V)

CIRCUIT RATING	CONDUIT SIZE (INCHES)							CONDUCTOR SIZE	
	NONE	G	N	NG	NGI	NNG	NNGI	PHASE/ NEUTRAL	GND/* IG
15	0.5	0.5	0.5	0.5	0.5	0.5	0.5	12	12
20	0.5	0.5	0.5	0.5	0.5	0.5	0.5	12	12
30	0.5	0.5	0.5	0.5	0.75	0.75	0.75	10	10
40	0.75	0.75	0.75	1	1	1	1	8	10
50	1	1	1	1.25	1.25	1.25	1.25	6	10
60	1	1.25	1.25	1.25	1.5	1.5	1.5	4	10
70	1	1.25	1.25	1.25	1.5	1.5	1.5	4	8
80	1.25	1.25	1.25	1.5	2	2	2	2	8
90	1.25	1.25	1.25	1.5	2	2	2	2	88
100	1.25	1.5	1.5	2	2	2	2.5	1	8
110	1.25	1.5	1.5	2	2	2	2.5	1	6
125	1.25	1.5	1.5	2	2	2	2.5	1	6
150	1.5	2	2	2	2.5	2.5	2.5	1/0	6
175	1.5	2	2	2	2.5	2.5	2.5	2/0	6
200	2	2	2	2.5	2.5	2.5	3	3/0	6
225	2	2.5	2.5	2.5	3	3	3	4/0	4

SUBSCRIPT KEY

SUBSCRIPT	CONDUCTORS PER CONDUIT
NONE	3 PHASE CONDUCTORS, CONDUIT GROUND
G	3 PHASE CONDUCTORS, 1 GROUNDING CONDUCTOR
N	3 PHASE CONDUCTORS, 1 NEUTRAL CONDUCTOR, CONDUIT GROUND
NG	3 PHASE CONDUCTORS, 1 NEUTRAL CONDUCTOR, 1 GROUNDING CONDUCTOR
NGI	3 PHASE CONDUCTORS, 1 NEUTRAL CONDUCTOR, 1 GROUNDING CONDUCTOR, 1 ISOLATED GROUNDING CONDUCTOR
NNG	3 PHASE CONDUCTORS, 2 NEUTRAL CONDUCTORS*, 1 GROUNDING CONDUCTOR
NNGI	3 PHASE CONDUCTORS, 2 NEUTRAL CONDUCTORS*, 1 GROUNDING CONDUCTOR, 1 ISOLATED GROUNDING CONDUCTOR

* SINGLE NEUTRAL CONDUCTOR SIZES FOR CIRCUIT RATING 125 AND LESS

PARALLEL CONDUCTORS ARE NOT PERMITTED UNDER 1/0. WHERE DOUBLE NEUTRAL CONDUCTORS ARE INDICATED, PROVIDE AN OVERSIZED NEUTRAL CONDUCTOR IN ACCORDANCE WITH THE FOLLOWING TABLE:

CIRCUIT RATING	15	20	30	40	50	60
SINGLE NEUTRAL CONDUCOTR SIZE	10	8	4	2	1	1/0
CIRCUIT RATING	70	80	90	100	125	
SINGLE NEUTRAL CONDUCTOR SIZE	2/0	3/0	4/0	250	250	

EXAMPLES

SOURCE — 225NG — LOAD

CIRCUIT RATING — 225 NG — SUBSCRIPT

NOTES

1. SCHEDULE IS BASED ON 3 CURRENT CARRYING CONDUCTORS IN RACEWAY, CABLE OR EARTH, AT AMBIENT AIR TEMPERATURE OF 30°C (86°F).
2. MODIFY IF USE OF 600MCM CONDUCTORS ARE DESIRED CONFIRM LUG SIZES ARE AVAILABLE.

EQUIPMENT CONNECTION SCHEDULE

DESIG-NATION	HP	FLA	KVA	VOLT-AGE	PH	POWER SOURCE	CONNEC-TION TYPE	BR. CKT. WIRING	REMARKS
CU-1-1A		28.9		208	3	80AF/100AS	SPC	80G TO TAP, 50G TO UNIT	SEE PARTIAL RISER DIAGRAM
CU-1-1B		28.9		208	3	80AF/100AS	SPC	80G TO TAP, 50G TO UNIT	SEE PARTIAL RISER DIAGRAM
EF-1-1			0.217	120	1	P5	FR	(2)#12+(1)#12G, 1/2"C	
EF-1-2			0.217	120	1	P5	FR	(2)#12+(1)#12G, 1/2"C	
EWH-1			4.5	208	3	P5	SPC	20G	NON-FUSED DISCONNECT
EWH-2			4.5	208	3	P5	SPC	20G	NON-FUSED DISCONNECT
FCU-1-1		2.72		208	1	P5	FR	(2)#12+(1)#12G, 1/2"C	
FCU-1-2		2.72		208	1	P5	FR	(2)#12+(1)#12G, 1/2"C	
FCU-1-3		2.72		208	1	P5	FR	(2)#12+(1)#12G, 1/2"C	
SF-1-1			0.305	120	1	P5	FR	(2)#12+(1)#12G, 1/2"C	

EQUIPMENT CONNECTION DESIGNATIONS LEGEND

DESIGNATION	DESCRIPTION	DESIGNATION	DESCRIPTION	DESIGNATION	DESCRIPTION
CU	CONDENSING UNIT	PS	PROJECTION SCREEN	VM	VENDING MACHINE
EF	EXHAUST FAN	REF	REFRIGERATOR	VFD	VARIABLE FREQUENCY DRIVE
EWH	ELECTRIC WATER HEATER	SD	SMOKE DAMPER	TYPE FR	FRACTIONAL HP MOTOR
FCU	FAN COIL UNIT	SE	SEWAGE EJECTOR	TYPE FWS	FURNISHED WITH STARTER
FSD	FIRE/SMOKE DAMPER	SF	SUPPLY FAN	TYPE M	MOTOR WITH STARTER
GD	GARBAGE DISPOSAL	SP	SUMP PUMP	TYPE SPC	SINGLE POINT CONNECTION
MW	MICROWAVE OVEN	UH	UNIT HEATER	TYPE VFD	VARIABLE FREQUENCY DRIVE

NUMBERED NOTES

1. TO EXISTING EQUIPMENT TO REMAIN. NOT AFFECTED UNDER SCOPE OF WORK.
2. EXISTING DEVICE SERVES EQUIPMENT TO BE REMOVED UNDER DEMOLITION SCOPE OF WORK. REMOVE EXISTING CONDUCTORS AND CONDUIT BACK TO DEVICE, TURN OFF, AND LABEL AS A "SPARE."
3. EXISTING DEVICE SERVES EQUIPMENT TO BE REMOVED UNDER DEMOLITION SCOPE OF WORK. REMOVE EXISTING CONDUCTORS AND CONDUIT BACK TO DEVICE, AND PROVIDE NEW FEEDER TO CONNECT TO NEW EQUIPMENT.
4. EXISTING SPARE 100AF DISCONNECT SWITCH WITH NO FUSE. PROVIDE NEW 80 AMP FUSE AND CONNECT TO NEW EQUIPMENT.
5. PROVIDE NEW 80G TAP FEEDER, OR CONFIRM THAT EXISTING TAP FEEDER TO DISCONNECT SWITCH IS MINIMUM (3)#2+(1)#8G IN 1-1/4"C, COPPER CONDUCTORS.
6. PROVIDE NEW 120V, 250VA, SINGLE-PHASE EMERGENCY LIGHTING INVERTER. REFER TO NUMBERED NOTE 7 ON E201 FOR SPECIFICATION INFORMATION.

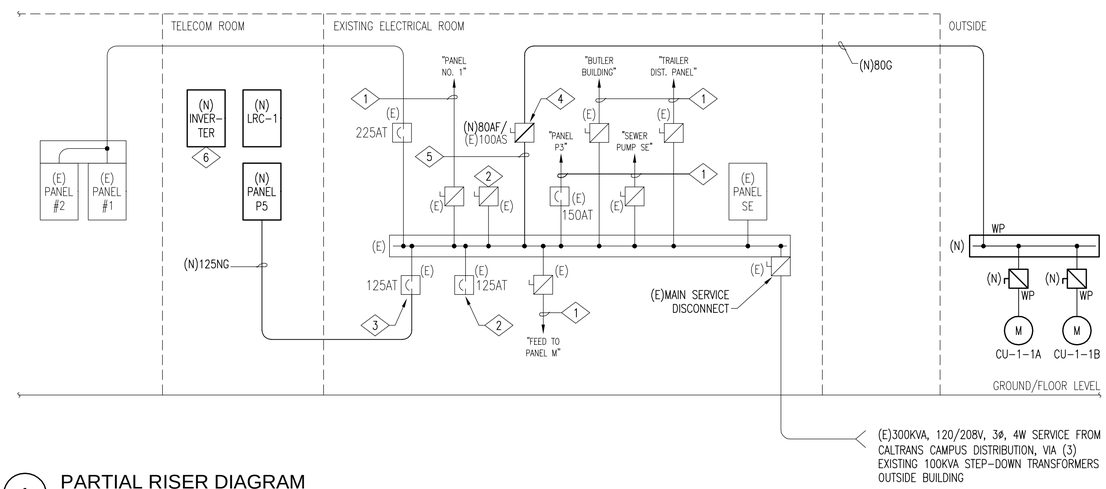

1 PARTIAL RISER DIAGRAM
NOT TO SCALE

3/27/2013 8:47:57 PM

Jaswinder Gill
DESIGN OVERSIGHT

03/27/13
SIGN OFF DATE

DESIGN DETAIL SHEET (ENGLISH) (REV. 03/14/12)

	BY	CHECKED
DESIGN	ANDREW HARRINGTON	ROBERT C. NIXDORF
DETAILS	BY	CHECKED
QUANTITIES	BY	CHECKED

ORIGINAL SCALE IN INCHES FOR REDUCED PLANS 0 1 2 3

PREPARED FOR THE
STATE OF CALIFORNIA
DEPARTMENT OF TRANSPORTATION

KAREN Y. WANG
PROJECT ENGINEER

BRIDGE NO
POST MILES 2.0

SAN FRANCISCO OAKLAND BAY BRIDGE EAST SPAN SEISMIC SAFETY PROJECT

IERBYS TEMPORARY IMPROVEMENTS - BUILDING

ELECTRICAL SCHEDULES AND PARTIAL RISER DIAGRAM

SHEET E601

UNIT: 04
PROJECT NUMBER AND PHASE: CONTRACT NO.: 0120F4

DISREGARD PRINTS BEARING EARLIER REVISION DATES

REVISION DATES

SHEET 57 OF 66

C:\Users\cschurr\Documents\56185_Gateway Park - Central_cschurr.rvt

DIST	COUNTY	ROUTE	POST MILES TOTAL PROJECT	SHEET No	TOTAL SHEETS
04	ALA	80	2.0	1204bk	1204

REGISTERED ENGINEER 03/27/13 DATE

REGISTERED PROFESSIONAL ENGINEER ANDREW HARRINGTON No. E19367 ELECTRICAL STATE OF CALIFORNIA

PLANS APPROVAL DATE

The state of California or its officers or agents shall not be responsible for the accuracy or completeness of scanned copies of this plan sheet.

WSP • FLACK + KURTZ
405 HOWARD ST. #500
SAN FRANCISCO, CA 94106

(N) LIGHTING RELAY CABINET SCHEDULE: LRC-1

RELAY NUMBER	LIGHTING ZONE DESCRIPTION	BRANCH CIRCUIT	CONTROL ON	CONTROL OFF
1	HIGH BAY TRACK LIGHTING	P5/13aa	TS, LV	TS, SR, LV, PC
2	HIGH BAY TRACK LIGHTING	P5/15bb	TS, LV	TS, SR, LV, PC
3	HIGH BAY TRACK LIGHTING	P5/17cc	TS, LV	TS, SR, LV, PC
4	HIGH BAY TRACK LIGHTING	P5/19dd	TS, LV	TS, SR, LV, PC
5	HIGH BAY TRACK LIGHTING	P5/21ee	TS, LV	TS, SR, LV, PC
6	HIGH BAY TRACK LIGHTING	P5/23ff	TS, LV	TS, SR, LV, PC
7	HIGH BAY TRACK LIGHTING	P5/25gg	TS, LV	TS, SR, LV, PC
8	HIGH BAY TRACK LIGHTING	P5/27hh	TS, LV	TS, SR, LV, PC
9	HIGH BAY TRACK LIGHTING	P5/29jj	TS, LV	TS, SR, LV, PC
10	LOW BAY OPEN AREA LIGHTING	P5/31kk	TS, LV	TS, SR, LV
11	HIGH BAY EXISTING PENDANT LIGHTS	P5/33ll	TS, LV	TS, SR, LV, PC
12	EXTERIOR WALL MOUNTED LIGHTING	P5/9mm	TS, LV	TS, LV
13	EXTERIOR CANOPY LIGHTING (VIA INVERTER)	P5/9nn VIA INVERTER	TS, LV	TS, LV
14	LOW BAY CORRIDOR LIGHTING	P5/7oo	TS, LV	TS, SR, LV
15	EXTERIOR SITE LIGHTING	P5/5pp	TS, LV	TS, LV
16	HIGH BAY UNDERFLOOR LIGHTS	P5/9qq	TS, LV	TS, SR, LV
17	EXTERIOR SIGNAGE	P5/24ss	TS, LV	TS, LV
18	SPARE			

CONTROL TYPES: TS = TIME SCHEDULE, SR = SWEEP REPEAT, LI = LINE INTERRUPT SWITCH; LV = LOW VOLTAGE SWITCH, OS = OCCUPANCY SENSOR, PC = PHOTOCELL

SHEET NOTES

A. PROVIDE MULTIPLE POLE CIRCUIT BREAKERS OR APPROVED HANDLE TIE DEVICES FOR ALL MULTIWIRE BRANCH CIRCUITS TO SIMULTANEOUSLY DISCONNECT ALL UNGROUNDED CONDUCTORS, IN ACCORDANCE WITH THE CEC.

B. ALL NEW CIRCUIT BREAKERS, LOAD DESCRIPTIONS, AND ADDED LOAD VALUES ARE SHOWN IN REGULAR BLACK TEXT. EXISTING BRANCH CIRCUIT BREAKERS AND LOAD DESCRIPTIONS ARE SHOWN IN LIGHT GRAY TEXT.

C. REPLACE OR ADD BRANCH CIRCUIT BREAKERS AS SHOWN ON THIS DRAWING AND AS REQUIRED TO SERVE THE ELECTRICAL LOADS ADDED IN THIS SCOPE OF WORK.

D. THE EXISTING ELECTRICAL DEMAND LOADS ON PANELBOARDS IN THIS BUILDING ARE UNKNOWN. IN ACCORDANCE WITH THE CEC, CONTRACTOR SHALL VERIFY THAT EXISTING EQUIPMENT HAS SUFFICIENT CAPACITY TO SERVE THE NEW DEVICES AND EQUIPMENT. PANELBOARD LOAD TOTALS ON THIS DRAWING SHOW ONLY NEW ELECTRICAL LOADS ADDED AS PART OF THIS SCOPE OF WORK.

E. PROVIDE ACCURATE TYPEWRITTEN UPDATED PANELBOARD DIRECTORIES FOR ALL AFFECTED PANELS. INDICATE NEW AND EXISTING CIRCUITS, AS WELL AS SPARE CIRCUITS AND BREAKER SPACES. TURN "OFF" ALL SPARE BREAKERS.

PANEL: (E) PANEL #1 — 120/208V, 3 PHASE-4 WIRE — SURFACE MOUNTED
MAIN: (E)100A/3P — BUS AMPACITY: 225A — 10,000 AIC SYMMETRICAL

TYPE	DESCRIPTION	DEVICE	CKT	LOAD/PHASE (VA) A	B	C	A	B	C	CKT	DEVICE	DESCRIPTION	TYPE
	EXISTING LOAD	(E)20/1	1							2	(E)20/1	EXISTING LOAD	
	EXISTING LOAD	(E)20/1	3							4	(E)20/1	EXISTING LOAD	
	EXISTING LOAD	(E)20/1	5							6	(E)20/1	EXISTING LOAD	
	EXISTING LOAD	(E)20/1	7							8	(E)20/1	EXISTING LOAD	
	EXISTING LOAD	(E)20/1	9							10	(E)20/1	EXISTING LOAD	
	EXISTING LOAD	(E)20/1	11							12	(E)20/1	EXISTING LOAD	
	EXISTING LOAD	(E)20/2	13							14	(E)20/2	EXISTING LOAD	
	*	*	15							16	*	*	
R	LOW BAY PERIMETER CONV	(E)20/1	17			360			720	18	(E)20/1	CORR, RESTRM, & STRGE OUTLETS	R
E	MICROWAVE	(E)20/1	19	1,500						20	(E)20/1	SPARE	
R	AC CONV	(E)20/1	21		180			540		22	(E)20/1	HIGHBAY PERIMETER CONV	R
E	UC REFRIGERATOR	(E)20/1	23			500			720	24	(E)20/1	HIGHBAY PERIMETER CONV	R
SUBTOTAL (VA)				1,500	180	860	0	540	1,440	SUBTOTAL (VA)			
TOTAL ALL PHASES (VA)				PHASE A		PHASE B		PHASE C		TOTAL ALL PHASES (AMPS)			
4,520				1,500		720		2,300		13			

LOAD SUMMARY BY TYPE	CONNECTED LOAD	DEMAND FACTOR	NEC LOAD
E = EQUIPMENT	2,000 VA	1.00	2,000 VA
H = ELECTRIC HEAT	0 VA	1.00	0 VA
K = KITCHEN EQUIPMENT	0 VA	1.00	0 VA
L = LIGHTING	0 VA	1.25	0 VA
M = MOTOR	0 VA	1.00	0 VA
M = LARGEST MOTOR	0 VA	1.25	0 VA
R = RECEPTACLE	2,520 VA	1.00	2,520 VA

CONNECTED LOAD SUMMARY
4,520 VA
13 AMPS

NEC LOAD SUMMARY
4,520 VA
13 AMPS

PANEL: (N) PANEL P5 — 120/208V, 3 PHASE-4 WIRE — SURFACE MOUNTED
MAIN: 125A/3P — BUS AMPACITY: 225A — 10,000 AIC SYMMETRICAL

TYPE	DESCRIPTION	DEVICE	CKT	LOAD/PHASE (VA) A	B	C	A	B	C	CKT	DEVICE	DESCRIPTION	TYPE
R	ELEC CLST, RR, & CORR OUTLETS	20/1	1	720			540			2	20/1	HIGH BAY FLOOR BOX CONV	R
R	LOW BAY CONV	20/1	3		720			540		4	20/1	HIGH BAY FLOOR BOX CONV	R
L	SITE LIGHTING	20/1	5			1,200			540	6	20/1	HIGH BAY FLOOR BOX CONV	R
L	LOW BAY LIGHTING	20/1	7	1,394			540			8	20/1	HIGH BAY FLOOR BOX CONV	R
L	EXT BLDG MTD & UNDRFLR LIGHTS	20/1	9		916			540		10	20/1	HIGH BAY FLOOR BOX CONV	R
L	W3 EM LIGHTING & EXIT SIGNS	20/1	11			67			540	12	20/1	HIGH BAY FLOOR BOX CONV	R
L	TRACK LIGHTING	20/1	13	540			720			14	20/1	HIGH BAY PERIMETER CONV	R
L	TRACK LIGHTING	20/1	15		540			540		16	20/1	HIGH BAY PERIMETER CONV	R
L	TRACK LIGHTING	20/1	17			540			540	18	20/1	HIGH BAY PERIMETER CONV	R
L	TRACK LIGHTING	20/1	19	540			540			20	20/1	HIGH BAY PERIMETER CONV	R
L	TRACK LIGHTING	20/1	21		540			300		22	20/1	UH-1-1, -2, -3, -4, -5, -6	E
L	TRACK LIGHTING	20/1	23			540			480	24	20/1	EXTERIOR RECEPTACLE & SIGNAGE	L
L	TRACK LIGHTING	20/1	25	540						26	20/1	SPARE	
L	TRACK LIGHTING	20/1	27		540			540		28	20/1	LOW BAY PERIMETER CONV	R
L	TRACK LIGHTING	20/1	29			540			540	30	20/1	LOW BAY PERIMETER CONV	R
L	LOW BAY LIGHTING	20/1	31	1,720			739			32	15/1	EF-1-1, EF-1-2, SF-1-1	M
L	LOW & HIGH BAY LIGHTING	20/1	33		1,210			849		34	15/2	FCU-1-1, FCU-1-2, FCU-1-3	M
E	FACP CONTROL POWER	20/1	35			500			849	36	*	*	M
H	EWH-1	20/3	37	1,500			1,500			38	20/3	EWH-2	H
H	*	*	39		1,500			1,500		40	*	*	H
H	*	*	41			1,500			1,500	42	*	*	H
SUBTOTAL (VA)				6,954	5,966	4,887	4,579	4,809	4,989	SUBTOTAL (VA)			
TOTAL ALL PHASES (VA)				PHASE A		PHASE B		PHASE C		TOTAL ALL PHASES (AMPS)			
32,183				11,533		10,775		9,875		89			

LOAD SUMMARY BY TYPE	CONNECTED LOAD	DEMAND FACTOR	NEC LOAD
E = EQUIPMENT	800 VA	1.00	800 VA
H = ELECTRIC HEAT	9,000 VA	1.00	9,000 VA
K = KITCHEN EQUIPMENT	0 VA	1.00	0 VA
L = LIGHTING	11,847 VA	1.25	14809 VA
M = MOTOR	1,871 VA	1.00	1,871 VA
M = LARGEST MOTOR	566 VA	1.25	707 VA
R = RECEPTACLE	8,100 VA	1.00	8,100 VA

CONNECTED LOAD SUMMARY
32,183 VA
89 AMPS

NEC LOAD SUMMARY
35,286 VA
98 AMPS

3/27/2013 8:48:16 PM

SAN FRANCISCO OAKLAND BAY BRIDGE
EAST SPAN SEISMIC SAFETY PROJECT

Jaswinder Gill
DESIGN OVERSIGHT
03/27/13
SIGN OFF DATE

	BY	CHECKED
DESIGN	ANDREW HARRINGTON	ROBERT C. NIXDORF
DETAILS	BY	CHECKED
QUANTITIES	BY	CHECKED

PREPARED FOR THE STATE OF CALIFORNIA DEPARTMENT OF TRANSPORTATION

KAREN Y. WANG
PROJECT ENGINEER

BRIDGE NO
POST MILES 2.0

IERBYS TEMPORARY IMPROVEMENTS - BUILDING

ELECTRICAL SCHEDULES

SHEET E602

DESIGN DETAIL SHEET (ENGLISH) (REV. 03/14/12)

ORIGINAL SCALE IN INCHES FOR REDUCED PLANS 0 1 2 3

UNIT: 04
PROJECT NUMBER AND PHASE:
CONTRACT NO.: 0120F4

DISREGARD PRINTS BEARING EARLIER REVISION DATES

REVISION DATES ___ ___ ___ ___

SHEET 58 OF 66

C:\Users\cschurr\Documents\56185_Gateway Park - Central_cschurr.rvt

DIST	COUNTY	ROUTE	POST MILES TOTAL PROJECT	SHEET No	TOTAL SHEETS
04	ALA	80	2.0	1204bl	1204

JRGK
REGISTERED ENGINEER — 03/27/13 DATE

PLANS APPROVAL DATE

REGISTERED PROFESSIONAL ENGINEER — JAMES R. GROVEK — No. M 34898 — MECHANICAL — STATE OF CALIFORNIA

The state of California or its officers or agents shall not be responsible for the accuracy or completeness of scanned copies of this plan sheet.

WSP • FLACK + KURTZ
405 HOWARD ST. #500
SAN FRANCISCO, CA 94106

PLUMBING AND FIRE PROTECTION LEGEND AND ABBREVIATIONS

ABBREVIATIONS

AFF	ABOVE FINISHED FLOOR
AP	ACCESS PANEL
BLDG	BUILDING
BOB	BOTTOM OF THE BEAM
BOP	BOTTOM OF PIPE
CD	CONDENSATE DRAIN
CLG	CEILING
CO	CLEANOUT
CONN	CONNECTION
CONT	CONTINUATION
CW	COLD WATER
DF	DRINKING FOUNTAIN
DIA	DIAMETER
DN	DOWN
DR	DRAIN
DROP	DROP (WITHIN FLOOR)
DWG	DRAWING
(E)	EXISTING
EL	ELEVATION
ET	EXPANSION TANK
EWC	ELECTRIC WATER COOLER
EWH	ELECTRIC WATER HEATER
FCO	FLOOR CLEANOUT
FCU	FAN COIL UNIT
FD	FLOOR DRAIN
FHV	FIRE HOSE VALVE
FL	FLOOR
FSK	FLOOR SINK
FT	FEET
FU	FIXTURE UNIT
G	NATURAL GAS– LOW PRESSURE
GAL	GALLONS
GPM	GALLONS PER MINUTE
HW	HOT WATER
ID	INSIDE DIAMETER
IE	INVERT ELEVATION
IN	INCH
IW	INDIRECT WASTE
MAX	MAXIMUM
MIN	MINIMUM
(N)	NEW
OD	OUTSIDE DIAMETER
POC	POINT OF CONNECTION
PSI	POUNDS PER SQUARE INCH
RISE	RISE (WITH IN FLOOR)
SAN	SANITARY
SF	SQUARE FEET
SK	SINK
SPKR	SPRINKLER
TP	TRAP PRIMER
TPV	TRAP PRIMER VALVE
TYP	TYPICAL
UH	UNIT HEATER
UP	UP (PENETRATES FLOOR SLAB)
V	VENT
VB	VACUUM BREAKER
VR	VENT RISE
WF	WATER FILTER

LEGEND

	VACUUM BREAKER
	PRESSURE GAUGE AND COCK
	THERMOMETER
	WATER FLOW SWITCH
	VALVE (SPECIFICATION FOR TYPE)
	CHECK VALVE
	OS&Y (OUTSIDE SCREW & YOKE) VALVE
	VALVE WITH TAMPER SWITCH
	RELIEF VALVE
	ANGLE RELIEF VALVE
	UNION
	REDUCER
	ECCENTRIC REDUCER (E.R.)
	SLEEVE
	FLOOR DRAIN, AREA DRAIN, PLANT DRAIN, GARAGE DRAIN
	FLOOR SINK
	POINT OF CONNECTION (NEW TO EXISTING)
	FIRE HOSE VALVE
	SPRINKLER FLOOR CONTROL VALVE ASSEMBLY
	TAMPER SWITCH
# #	HYDRAULIC REF. POINTS # ELEMENT # NODE
	BOTTOM PIPE CONNECTION
	TOP PIPE CONNECTION
	VALVE IN VERTICAL
	P–TRAP
	CLEANOUT/PLUG
	PIPE DOWN
	PIPE UP
	CAP
	CHANGE IN PIPE ELEVATION
	ARROW INDICATES DIRECTION OF FLOW
	PITCH PIPE DOWN IN DIRECTION OF ARROW

PIPING LEGEND

POTABLE WATER	
	DOMESTIC COLD WATER PIPING
	DOMESTIC HOT WATER PIPING
	DOMESTIC HOT WATER RETURN PIPING

MISCELLANEOUS

P / 1	P = SAN, VENT STACK OR DOMESTIC WATER RISER F = FIRE STANDPIPE RISER — RISER / RISER NO.
CP / 1	EQUIPMENT DESIGNATION — EQUIPMENT / EQUIPMENT NO.
1 / P2.1	DETAIL DESIGNATION — DETAIL NUMBER / DWG. SHEET NO.
1	SHEET NOTE NUMBER
1	REVISION NUMBER

PIPING LEGEND (CONTINUED)

WASTE / VENT / STORM	
SAN	SANITARY (ABOVE FLOOR)
SAN	SANITARY (BELOW FLOOR)
V	VENT PIPING
IW	INDIRECT WASTE PIPING
G	LOW PRESSURE GAS PIPING
CD	CONDENSATE DRAIN PIPING
	EXISTING PIPING
	EXISTING PIPING TO BE REMOVED

PIPING LEGEND (CONTINUED)

FIRE PROTECTION	
(E)SP	EXISTING SPRINKLER PIPING
SP	SPRINKLER PIPING
FSP	FIRE STANDPIPE
DR	SPRINKLER DRAIN PIPING

APPLICABLE CODES AND STANDARDS

A. 2009 INTERNATIONAL BUILDING CODE.
B. 2009 INTERNATIONAL FIRE CODE.
C. 2010 CALIFORNIA BUILDING CODE.
D. 2010 CALIFORNIA FIRE CODE.
E. 2010 NFPA 13 "INSTALLATION OF SPRINKLER SYSTEMS".
F. 2007 NFPA 14 "INSTALLATION OF STANDPIPE AND HOSE SYSTEMS".
G. NFPA 25, 2006 CALIFORNIA EDITION BASED ON NFPA 25, 2002 EDITION "INSPECTION, TESTING AND MAINTENANCE OF WATER–BASED FIRE PROTECTION SYSTEMS".
H. 2008 NFPA 70 "NATIONAL ELECTRIC CODE".
I. 2010 NFPA 72 "NATIONAL FIRE ALARM CODE".
J. SAN FRANCISCO FIRE DEPARTMENT 2010 ADMINISTRATIVE BULLETINS.
K. CITY OF COUNTY OF SAN FRANCISCO MUNICIPAL CODE 2010 FIRE CODE.
L. FM GLOBAL PROPERTY LOSS PREVENTION DATA SHEETS: TO MEET INCREASED DENSITY BY FACTOR MUTUAL GLOBAL STANDARDS IS NOT REQUIRED FOR THIS PROJECT AT THIS TIME.
M. 2010 SAN FRANCISCO AMENDMENTS AND ORDINANCES.
N. 2010 CALIFORNIA PLUMBING CODE.
O. 2010 CALIFORNIA BUILDING STANDARDS CODE – TITLE 24, PART II CALIFORNIA GREEN BUILDING STANDARDS CODE (CALGREEN).
P. CALIFORNIA HEALTH AND SAFETY CODE, SECTION 116875(b)–CALIFORNIA LEAD–FREE PLUMBING LAW AB. 1953.
Q. STATE OF CALIFORNIA ENERGY CONSERVATION STANDARDS, TITLE 24.
R. CALIFORNIA HANDICAPPED CODE, ARTICLE 3 AND ADA REQUIREMENTS.

GENERAL NOTES

A. NO REVISIONS OR CHANGES OF ANY KIND MAY BE MADE TO THE CONSTRUCTION PLANS WITHOUT THE CONSENT OF OWNER AND ITS MANAGER. ANY PROPOSED REVISIONS OR CHANGES MUST BE SUBMITTED TO OWNER AND ITS MANAGER, FOR THEIR REVIEW AND APPROVAL PRIOR TO COMMENCEMENT OF SUCH CHANGES.

B. ALL TENANT'S CONTRACTOR'S WORK MUST BE SCHEDULED SO THAT IT IN NO WAY CONFLICTS WITH, INTERFERES WITH, OR IMPEDES THE QUIET AND PEACEFUL ENJOYMENT OF OTHER TENANTS, OR THE PROGRESS OF OWNER'S AND ITS MANAGER'S WORK OR OPERATIONS.

PLUMBING GENERAL NOTES

A. THE CONTRACTOR FOR THIS DIVISION OF WORKS IS REQUIRED TO READ THE SPECIFICATIONS AND REVIEW DRAWINGS FOR ALL DIVISIONS OF WORK AND IS RESPONSIBLE FOR THE COORDINATION OF THIS WORK AND THE WORK ALL SUBCONTRACTORS WITH ALL DIVISIONS OF WORK. IT IS CONTRACTOR'S RESPONSIBILITY TO PROVIDE ALL SUBCONTRACTOR'S WITH A COMPLETE SET OF BID DRAWINGS.

B. ALL PLUMBING WORK SHALL COMPLY WITH THE CURRENT APPROVED 2010 EDITION OF THE CALIFORNIA PLUMBING CODE .

C. THE CONTRACTOR, PRIOR TO BIDDING SHALL VISIT THE JOB SITE TO BE FAMILIARIZED WITH THE EXISTING PLUMBING INSTALLATIONS CONDITIONS, AND SYSTEMS RELATED TO THE SCOPE OF WORK.

D. ANY WORK INSTALLED INCORRECTLY, OR BEFORE APPROVAL HAS BEEN OFFICIALLY GRANTED FOR THOSE ITEMS AT ISSUE, SHALL BE CORRECTED BY THE PLUMBING CONTRACTOR AT NO CHARGE TO CLIENT.

E. ANY WORK SHOWN ON DRAWINGS IS IN PART SCHEMATIC, INTENDED TO CONVEY SCOPE OF WORK AND GENERAL LAYOUT. PIPING WORK SHOWN IS ESSENTIALLY DIAGRAMMATIC. CONTRACTOR SHALL INSTALL PLUMBING WORK TO SUIT FIELD CONDITIONS AND THE COORDINATION REQUIREMENTS OF OTHER TRADES.

F. ALL MATERIALS AND EQUIPMENT FURNISHED BY THE CONTRACTOR SHALL BE NEW AND COMPLETELY SERVICEABLE.

G. CONTRACTOR TO VERIFY EXACT LOCATION OF UTILITIES IN THE FIELD.

H. REFER TO ARCHITECTURAL DRAWINGS FOR EXACT LOCATIONS OF ALL PLUMBING FIXTURES.

I. DRAWINGS ARE DIAGRAMMATIC AND DO NOT NECESSARILY SHOW ALL OFFSETS OR FITTINGS REQUIRED. PLUMBING CONTRACTOR IS TO COORDINATE WITH ALL OTHER TRADES TO AVOID CONFLICTS.

J. OFFSETS IN VERTICAL DRAINAGE SHALL BE MADE AT 45 WHEREVER POSSIBLE.

K. IT IS THE CONTRACTOR'S RESPONSIBILITY TO INSTALL ALL WORK TO MEET OR EXCEED MINIMUM REQUIREMENTS STIPULATED IN CURRENT ISSUE OF APPLICABLE STANDARDS. CODES, OR REGULATIONS.

L. ALL FLOOR SINKS AND FLOOR DRAINS WILL HAVE TRAP PRIMERS AND VENT PIPE CONNECTION. CONTRACTOR TO PROVIDE 1/2" TRAP PRIMER LINE.

M. ABSOLUTE ACCURACY OF DRAWINGS AND SPECIFICATIONS CANNOT BE GUARANTEED. THE DRAWINGS ARE SCHEMATIC IN NATURE AND WHILE EVERY EFFORT HAS BEEN MADE TO COORDINATE THE LOCATIONS OF EQUIPMENT PIPING, DUCT, AND ETC. WITH OTHER TRADES IT IS THE RESPONSIBILITY OF THE CONTRACTOR TO COORDINATE EXACT REQUIREMENTS GOVERNED BY ACTUAL JOB CONDITION.

N. THE SANITARY DRAINAGE SYSTEMS SHALL BE TESTED IN ACCORDANCE WITH 2010 CALIFORNIA PLUMBING CODE, SECTION 712.0 "TESTING".

O. CLEANOUTS SHALL BE INSTALLED IN ACCORDANCE WITH 2010 CALIFORNIA PLUMBING CODE, SECTION 707.0 "CLEANOUTS".

FIRE PROTECTION GENERAL NOTES

A. THE CONTRACTOR FOR THIS DIVISION OF WORKS IS REQUIRED TO READ THE REPORTS, SPECIFICATIONS AND REVIEW DRAWINGS FOR ALL DIVISIONS OF WORK AND IS RESPONSIBLE FOR THE COORDINATION OF THIS WORK AND THE WORK ALL SUBCONTRACTORS WITH ALL DIVISIONS OF WORK. IT IS CONTRACTOR'S RESPONSIBILITY TO PROVIDE ALL SUBCONTRACTOR'S WITH A COMPLETE SET OF BID DRAWINGS.

B. THE INFORMATION ON THESE PLANS IS SHOWN TO PROVIDE SCOPE FOR THE DESIGN BUILD FIRE PROTECTION CONTRACTOR. FIRE PROTECTION CONTRACTOR IS TO PROVIDE HYDRAULICALLY CALCULATED DESIGN.

C. SPRINKLER HEADS SHALL BE COORDINATED WITH THE LIGHTING FIXTURES AND MECHANICAL DIFFUSERS. SPRINKLER HEAD AND FRAME ALIGNMENT IS REQUIRED IN ALL AREAS. ALL SPRINKLER HEADS ARE TO BE LOCATED AT THE CENTER OF THE CEILING TILE. PRIOR TO INSTALLATION SPRINKLER FINAL FINISH IS SUBJECT TO ARCHITECT'S APPROVAL. MISMATCHED POSITIONING OF SPRINKLER HEADS WILL NOT BE AN ACCEPTABLE STANDARD TO THE BUILDING.

D. SPRINKLERS SHALL ONLY BE PAINTED BY THE SPRINKLER MANUFACTURER.

E. WHERE SPRINKLERS HAVE HAD PAINT APPLIED BY OTHER THAN THE SPRINKLER MANUFACTURER, THEY SHALL BE REPLACED WITH NEW LISTED SPRINKLERS OF THE SAME CHARACTERISTICS, INCLUDING ORIFICE SIZE, THERMAL RESPONSE, AND WATER DISTRIBUTION.

F. ESCUTCHEONS SHALL BE PART OF A LISTED SPRINKLER ASSEMBLY.

G. COVER PLATES USED WITH CONCEALED SPRINKLERS SHALL BE PART OF THE LISTED SPRINKLER ASSEMBLY.

H. DURING CONSTRUCTION FOR THE TEMPORARY CONDITION OF PROTECTING NEWLY INSTALLED SPRINKLERS IN AREAS WHERE THE CEILINGS, ROOMS OR FIXTURES WILL BE PAINTED AN ORANGE PROTECTIVE CUP THAT PROTECTS THE GLASS BULB FROM DAMAGE FOR ALL SPRINKLERS SHALL COME FROM THE FACTORY.

I. THE CONDITION OF ALL SPRINKLERS MUST BE CONFIRMED AFTER CEILINGS ARE INSTALLED AND ROOMS AND CEILINGS ARE PAINTED. ALSO REMOVE PLASTIC PROTECTIVE COVERS PROVIDED BY THE MANUFACTURERS TO PROTECT SPRINKLER HEADS DURING CONSTRUCTION. USE OF ANY PROTECTIVE COVERING IS EXPRESSLY PROHIBITED.

J. AUTOMATIC SPRINKLER SYSTEMS WILL BE PROVIDED THROUGHOUT ALL PORTIONS OF THE PROJECTS DESIGNED IN ACCORDANCE WITH THE NFPA 13, 2010.

K. CONCEALED SPACES OF EXPOSED COMBUSTIBLE CONSTRUCTION SHALL BE PROTECTED BY SPRINKLERS EXCEPT IN CONCEALED SPACES WHERE SPRINKLERS ARE NOT REQUIRED TO BE INSTALLED BY SECTIONS 8.15.1.2.1 THROUGH 8.15.1.2.16 AND 8.15.6 OF THE NFPA 13, 2010.

L. WET–PIPE HYDRAULICALLY CALCULATED AUTOMATIC SPRINKLER SYSTEM WLL BE PROVIDED THROUGHOUT ENTIRE FLOOR. NEW HYDRAULIC CALCULATIONS SHALL BE SUBMITTED TO OWNER AND ITS MANAGER BEFORE COMMENCEMENT OF THE WORK WHEN SPRINKLER SYSTEM CHANGES ARE MADE THAT AFFECT PARTIAL OR ENTIRE SYSTEM HYDRAULIC CALCULATION

M. HANGERS, BRACING, AND RESTRAINT OF SYSTEM PIPING SHALL BE INSTALLED PER 2010 NFPA 13 CHAPTER 9 AND "PROTECTION OF PIPING AGAINST DAMAGE WHERE SUBJECT TO EARTHQUAKE" (2010 NFPA 13, SECTION 9.3).

3/27/2013 8:49:26 PM

SAN FRANCISCO OAKLAND BAY BRIDGE
EAST SPAN SEISMIC SAFETY PROJECT

Jaswinder Gill
DESIGN OVERSIGHT
03/27/13
SIGN OFF DATE

	BY	CHECKED
DESIGN	JOJI THOMAS	ROBERT C. NIXDORF
DETAILS	BY	CHECKED
QUANTITIES	BY	CHECKED

PREPARED FOR THE
STATE OF CALIFORNIA
DEPARTMENT OF TRANSPORTATION

KAREN Y. WANG
PROJECT ENGINEER

BRIDGE NO
POST MILES 2.0

IERBYS TEMPORARY IMPROVEMENTS - BUILDING
PLUMBING & FIRE PROTECTION LEGEND AND ABBREVIATIONS

SHEET P000

DESIGN DETAIL SHEET (ENGLISH) (REV. 03/14/12)

ORIGINAL SCALE IN INCHES FOR REDUCED PLANS 0 1 2 3

UNIT: 04
PROJECT NUMBER AND PHASE:
CONTRACT NO.: 0120F4

DISREGARD PRINTS BEARING EARLIER REVISION DATES

REVISION DATES

SHEET 59 OF 66

C:\Users\cschurr\Documents\56185_Gateway Park - Central_cschurr.rvt

DIST	COUNTY	ROUTE	POST MILES TOTAL PROJECT	SHEET No	TOTAL SHEETS
04	ALA	80	2.0	1204bm	1204

JRGK
REGISTERED ENGINEER
03/27/13
DATE

REGISTERED PROFESSIONAL ENGINEER
JAMES R. GROVEK
No. M 34898
MECHANICAL
STATE OF CALIFORNIA

PLANS APPROVAL DATE

The state of California or its officers or agents shall not be responsible for the accuracy or completeness of scanned copies of this plan sheet.

WSP • FLACK + KURTZ
405 HOWARD ST. #500
SAN FRANCISCO, CA 94106

PLUMBING FIXTURE SCHEDULE

ITEM	DESCRIPTION	CONNECTIONS				REMARKS
		S	V	CW	HW	
WC-1	WATER CLOSET	3"	2"	1-1/4"	–	VITREOUS CHINA WALL HUNG, SIPHON JET, 1.28GPF
HWC-1	WATER CLOSET	3"	2"	1-1/4"	–	ADA COMPLAINT, VITREOUS CHINA WALL HUNG, SIPHON JET, 1.28GPF
UR-1	URINAL	2"	1-1/2"	3/4"	–	VITREOUS CHINA WALL HUNG, SIPHON JET, 0.125 GPF
UR-2	URINAL	2"	1-1/2"	3/4"	–	ADA COMPLAINT, VITREOUS CHINA WALL HUNG, SIPHON JET, 0.125 GPF
L-1	LAVATORY	2"	1-1/2"	1/2"	1/2"	ADA COMPLAINT, UNDER COUNTER MOUNT, 0.5GPM SENSOR OPERATED FAUCET.
SK-1	SINK	2"	1-1/2"	1/2"	1/2"	NO GARBAGE DISPOSER, 0.5 GPM FAUCET
MS-1	MOP SINK	2"	1-1/2"	1/2"	1/2"	–

PLUMBING DRAIN AND CLEANOUT SCHEDULE

ITEM	DESCRIPTION	MANUFACTURER	MODEL NUMBER	STRAINER TYPE	REMARKS
FD-1	FLOOR DRAIN	JR SMITH	2005Y-B-U-HP-NB	5" SQUARE TOP, ADJUSTABLE STRAINER HEAD, WIDE FLANGED STRAINER.	TRAP PRIMER, NICKEL BRONZE, VANDAL PROOF SCREWS,HEELPROOF GRATE.
WCO	WALL CLEAN OUT	JR SMITH	4532S	ROUND COVER PLATE	STAINLESS STEEL ACCESS COVER,TAPERED THREAD BRONZE PLUG.

PLUMBING WATER HEATER SCHEDULE

ITEM	LOCATION/ SERVICE	TANK CAPACITY	MINIMUM FLOW TO ACTIVATE	KW	VOLTS	APPLICATION	REMARKS
EWH-1	MEN'S RESTROOM	15 GALLON	–	4.5	208	STORAGE TYPE	A.O.SMITH / MODEL DEL-15S-4.5, DUAL ELEMENT MODEL WIRED FOR 3 PH/ 208 V
EWH-2	WOMEN'S RESTROOM	15 GALLON	–	4.5	208	STORAGE TYPE	A.O.SMITH / MODEL DEL-15S-4.5, DUAL ELEMENT MODEL WIRED FOR 3 PH/ 208 V

PLUMBING EXPANSION TANK SCHEDULE

ITEM	LOCATION/ SERVICE	DESCRIPTION	REMARKS
ET-1	MEN'S RESTROOM	EXPANSION TANK – AMTROL THERM-X-TROL MODEL A-ST-12 OR EQUAL	–
ET-2	WOMEN'S RESTROOM	EXPANSION TANK – AMTROL THERM-X-TROL MODEL A-ST-12 OR EQUAL	–

3/27/2013 8:49:32 PM

SAN FRANCISCO OAKLAND BAY BRIDGE
EAST SPAN SEISMIC SAFETY PROJECT

Jaswinder Gill
DESIGN OVERSIGHT
03/27/13
SIGN OFF DATE

	BY	CHECKED
DESIGN	JOJI THOMAS	ROBERT C. NIXDORF
DETAILS		
QUANTITIES		

PREPARED FOR THE
STATE OF CALIFORNIA
DEPARTMENT OF TRANSPORTATION

KAREN Y. WANG
PROJECT ENGINEER

BRIDGE NO
POST MILES 2.0

IERBYS TEMPORARY IMPROVEMENTS - BUILDING

PLUMBING & FIRE PROTECTION SCHEDULES

SHEET P001

DESIGN DETAIL SHEET (ENGLISH) (REV. 03/14/12)

ORIGINAL SCALE IN INCHES FOR REDUCED PLANS 0 1 2 3

UNIT: 04
PROJECT NUMBER AND PHASE:
CONTRACT NO.: 0120F4

DISREGARD PRINTS BEARING EARLIER REVISION DATES

REVISION DATES ___ ___ ___ ___

SHEET 60 OF 66

C:\Users\cschurr\Documents\56185_Gateway Park - Central_cschurr.rvt

DIST	COUNTY	ROUTE	POST MILES TOTAL PROJECT	SHEET No	TOTAL SHEETS
04	ALA	80	2.0	1204bn	1204

JRGK
REGISTERED ENGINEER
03/27/13
DATE

REGISTERED PROFESSIONAL ENGINEER JAMES R. GROVEK No. M 34898 MECHANICAL STATE OF CALIFORNIA

PLANS APPROVAL DATE

The state of California or its officers or agents shall not be responsible for the accuracy or completeness of scanned copies of this plan sheet.

WSP • FLACK + KURTZ
405 HOWARD ST. #500
SAN FRANCISCO, CA 94106

SHEET NOTES

A. ALL SANITARY DRAIN LOCATIONS, TYPE OF PIPE & CONDITION SHOULD BE CHECKED.

NUMBERED NOTES

1. RELOCATE OR DEMOLISH EXISTING PIPE (AS APPROPRIATE) CROSSING THE DOORS OR OPERABLE WINDOWS ON EXTERIOR OF THE BUILDING TO ALLOW FULL RANGE OF WINDOW OR DOOR OPERATION. CONFIRM EAXCT LOCATION WITH ARCHITECT.

1 DEMOLITION FLOOR PLAN
1/8"=1'-0"

N

3/27/2013 8:49:46 PM

SAN FRANCISCO OAKLAND BAY BRIDGE
EAST SPAN SEISMIC SAFETY PROJECT

Jaswinder Gill
DESIGN OVERSIGHT
03/27/13
SIGN OFF DATE

	BY	CHECKED
DESIGN	JOJI THOMAS	ROBERT C. NIXDORF
DETAILS	BY	CHECKED
QUANTITIES	BY	CHECKED

PREPARED FOR THE
STATE OF CALIFORNIA
DEPARTMENT OF TRANSPORTATION

KAREN Y. WANG
PROJECT ENGINEER

BRIDGE NO
POST MILES 2.0

IERBYS TEMPORARY IMPROVEMENTS - BUILDING
PLUMBING & FIRE PROTECTION DEMOLITION FLOOR PLAN

SHEET P101

DESIGN DETAIL SHEET (ENGLISH) (REV. 03/14/12)

ORIGINAL SCALE IN INCHES FOR REDUCED PLANS 0 1 2 3

UNIT: 04
PROJECT NUMBER AND PHASE:
CONTRACT NO.: 0120F4

DISREGARD PRINTS BEARING EARLIER REVISION DATES

REVISION DATES				SHEET	OF
				61	66

C:\Users\cschurr\Documents\56185_Gateway Park - Central_cschurr.rvt

DIST	COUNTY	ROUTE	POST MILES TOTAL PROJECT	SHEET No	TOTAL SHEETS
04	ALA	80	2.0	1204bo	1204

JRGK
REGISTERED ENGINEER 03/27/13 DATE

REGISTERED PROFESSIONAL ENGINEER JAMES R. GROVEK No. M 34898 MECHANICAL STATE OF CALIFORNIA

PLANS APPROVAL DATE

The state of California or its officers or agents shall not be responsible for the accuracy or completeness of scanned copies of this plan sheet.

WSP • FLACK + KURTZ
405 HOWARD ST. #500
SAN FRANCISCO, CA 94106

SHEET NOTES

A. ALL SANITARY DRAIN LOCATIONS, TYPE OF PIPE & CONDITION SHOULD BE CHECKED.

NUMBERED NOTES

1. 3/4"CD & PROVIDE 3/4" SECONDARY DRAIN.
2. 1"CD & PROVIDE 1" SECONDARY DRAIN.
3. VERIFY LOCATION IN FIELD.

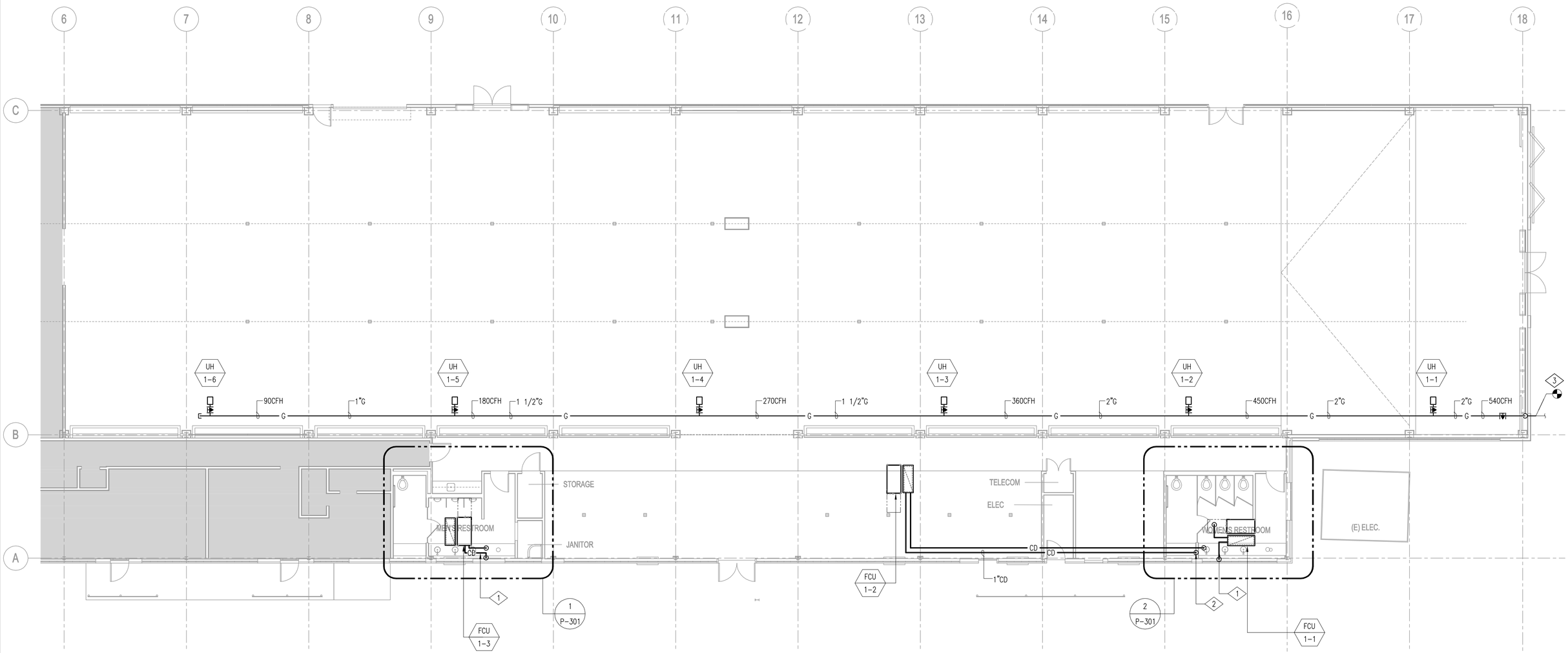

1 CONSTRUCTION FLOOR PLAN
1/8"=1'-0"

N

3/27/2013 8:49:51 PM

SAN FRANCISCO OAKLAND BAY BRIDGE
EAST SPAN SEISMIC SAFETY PROJECT

Jaswinder Gill
DESIGN OVERSIGHT
03/27/13
SIGN OFF DATE

	BY	CHECKED
DESIGN	JOJI THOMAS	ROBERT C. NIXDORF
DETAILS	BY	CHECKED
QUANTITIES	BY	CHECKED

PREPARED FOR THE
STATE OF CALIFORNIA
DEPARTMENT OF TRANSPORTATION

KAREN Y. WANG
PROJECT ENGINEER

BRIDGE NO
POST MILES 2.0

IERBYS TEMPORARY IMPROVEMENTS - BUILDING
PLUMBING & FIRE PROTECTION CONSTRUCTION FLOOR PLAN

SHEET P201

DESIGN DETAIL SHEET (ENGLISH) (REV. 03/14/12)

ORIGINAL SCALE IN INCHES FOR REDUCED PLANS 0 1 2 3

UNIT: 04
PROJECT NUMBER AND PHASE: CONTRACT NO.: 0120F4

DISREGARD PRINTS BEARING EARLIER REVISION DATES

REVISION DATES ___ ___ ___ ___

SHEET 62 OF 66

C:\Users\cschurr\Documents\56185_Gateway Park - Central_cschurr.rvt

DIST	COUNTY	ROUTE	POST MILES TOTAL PROJECT	SHEET No	TOTAL SHEETS
04	ALA	80	2.0	1204bp	1204

JRGK
REGISTERED ENGINEER

03/27/13
DATE

REGISTERED PROFESSIONAL ENGINEER
JAMES R. GROVEK
No. M 34898
MECHANICAL
STATE OF CALIFORNIA

PLANS APPROVAL DATE

The state of California or its officers or agents shall not be responsible for the accuracy or completeness of scanned copies of this plan sheet.

WSP • FLACK + KURTZ
405 HOWARD ST. #500
SAN FRANCISCO, CA 94106

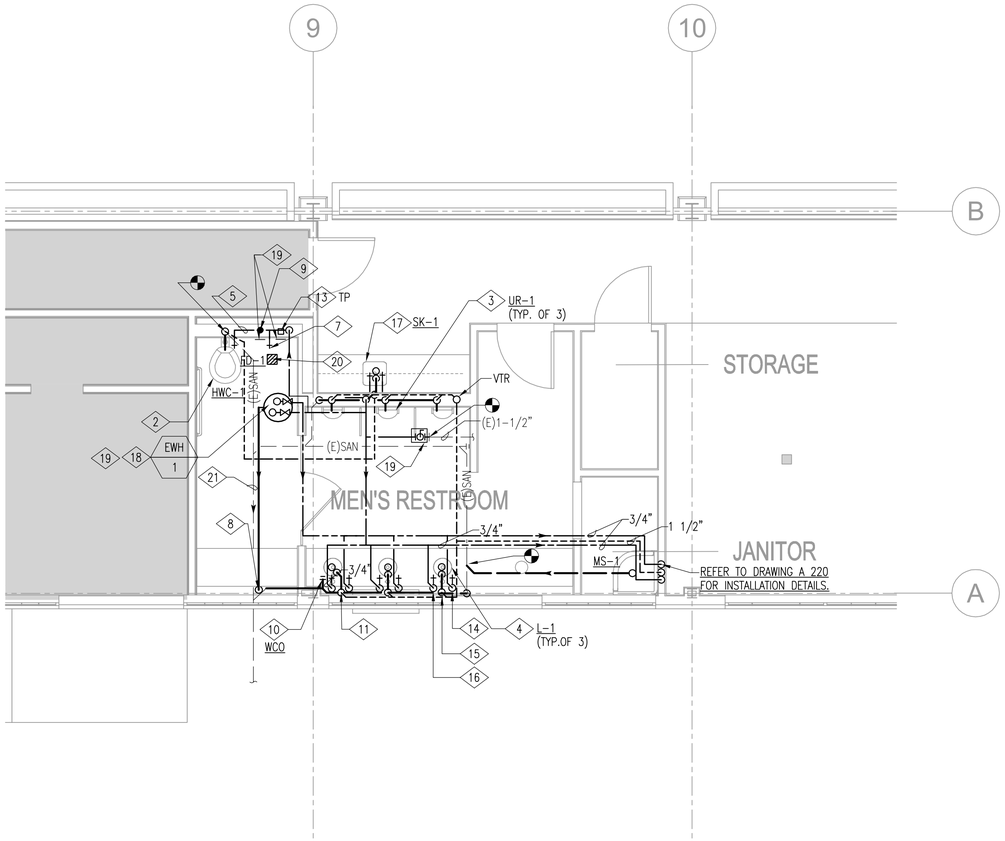

1 ENLARGED PLAN
1/4"=1'-0"

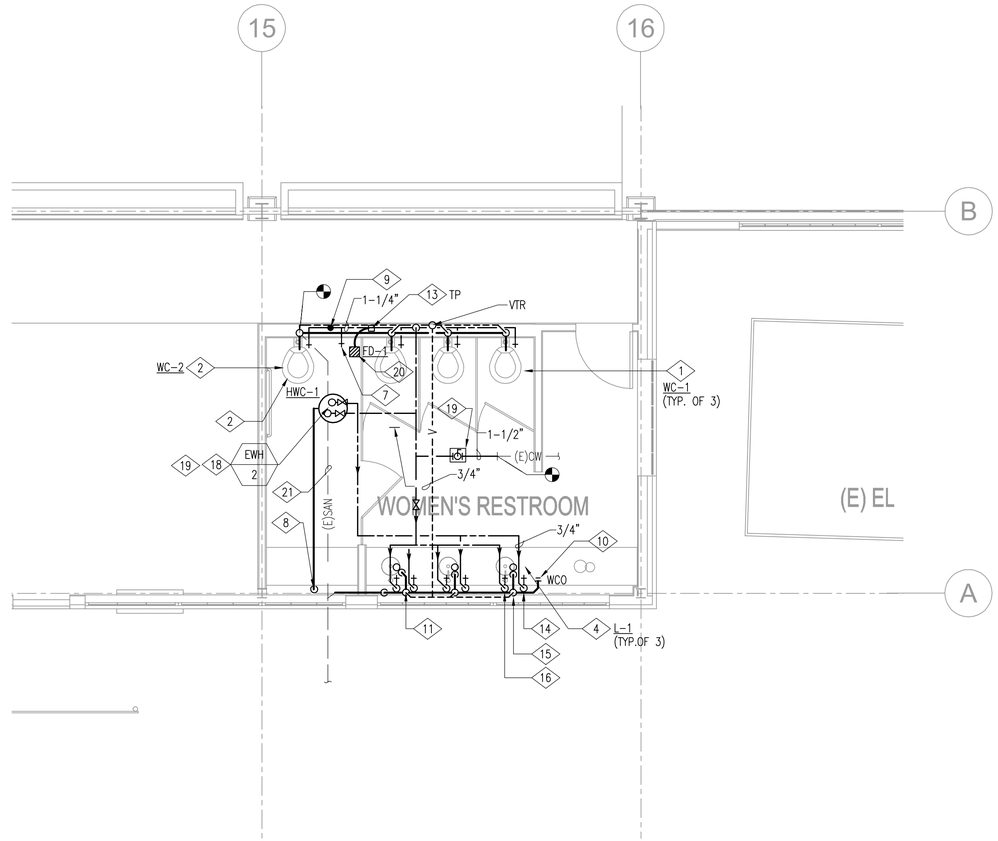

2 ENLARGED PLAN
1/4"=1'-0"

SHEET NOTES

A. ALL SANITARY DRAIN LOCATIONS, TYPE OF PIPE & CONDITION SHOULD BE CHECKED.

NUMBERED NOTES

1. (WC-1) WATER CLOSET. 3"SAN DN, 2"V UP, 1-1/4"CW.
2. (HWC-1) WATER CLOSET (ADA). 3"SAN DN, 2"V UP, 1-1/4"CW.
3. (UR-1) URINAL. 2"SAN DN, 1-1/2"V UP, 3/4"CW.
4. (L-1) LAVATORY. 2"SAN DN, 1-1/2"V UP, 1/2"TW.
5. 1-1/4"CW TO FLUSH VALVE.
6. NOT USED.
7. (HB-1) 3/4"CW.
8. REFER TO P601 DETAIL 11 & 12 FOR DRAIN DETAILS
9. SHOCK ABSORBER.
10. WALL CLEANOUT.
11. 2"V DROP.
12. RUN PIPING BELOW FLOOR.
13. TRAP PRIMER VALVE BEHIND ACCESS PANEL. COORDINATE ACCESS PANEL LOCATION WITH ARCHITECTURAL DRAWINGS.
14. 1/2"HW DROP DN.
15. 1-1/2" VENT DROP TO FIXTURES INDICATED.
16. 1/2"CW DROP DN.
17. (SK-1) SINK. 2"SAN DN, 1-1/2"V UP, 1/2"CW, 1/2"HW.
18. ELECTRIC WATER HEATER ABOVE CEILING LEVEL.FOR INSTALLATION DETAILS,REFER TO DETAIL10 ON DWG P601 & FOR DRAIN DETAILS, REFER TO DETAIL 11 & 12, DWG P601
19. ACCESS PANEL. COORDINATE WITH ARCHITECTUAL DRAWINGS.
20. LOCATE FD-1 PER ARCHITECTURAL DRAWINGS.
21. EXISTING DRAIN LINE BELOW SLAB - TO REMAIN.

N

3/27/2013 8:49:56 PM

SAN FRANCISCO OAKLAND BAY BRIDGE
EAST SPAN SEISMIC SAFETY PROJECT

Jaswinder Gill
DESIGN OVERSIGHT
03/27/13
SIGN OFF DATE

	BY	CHECKED
DESIGN	JOJI THOMAS	ROBERT C. NIXDORF
DETAILS	BY	CHECKED
QUANTITIES	BY	CHECKED

PREPARED FOR THE
STATE OF CALIFORNIA
DEPARTMENT OF TRANSPORTATION

KAREN Y. WANG
PROJECT ENGINEER

BRIDGE NO
POST MILES 2.0

IERBYS TEMPORARY IMPROVEMENTS - BUILDING
PLUMBING & FIRE PROTECTION ENLARGED PLANS

SHEET P301

DESIGN DETAIL SHEET (ENGLISH) (REV. 03/14/12)

ORIGINAL SCALE IN INCHES FOR REDUCED PLANS 0 1 2 3

UNIT: 04
PROJECT NUMBER AND PHASE: CONTRACT NO.: 0120F4

DISREGARD PRINTS BEARING EARLIER REVISION DATES

REVISION DATES				SHEET	OF
				63	66

C:\Users\cschurr\Documents\56185_Gateway Park - Central_cschurr.rvt

DIST	COUNTY	ROUTE	POST MILES TOTAL PROJECT	SHEET No	TOTAL SHEETS
04	ALA	80	2.0	1204bq	1204

JRGK
REGISTERED ENGINEER — DATE 03/27/13

PLANS APPROVAL DATE

REGISTERED PROFESSIONAL ENGINEER — JAMES R. GROVEK — No. M 34898 — MECHANICAL — STATE OF CALIFORNIA

The state of California or its officers or agents shall not be responsible for the accuracy or completeness of scanned copies of this plan sheet.

WSP • FLACK + KURTZ
405 HOWARD ST. #500
SAN FRANCISCO, CA 94106

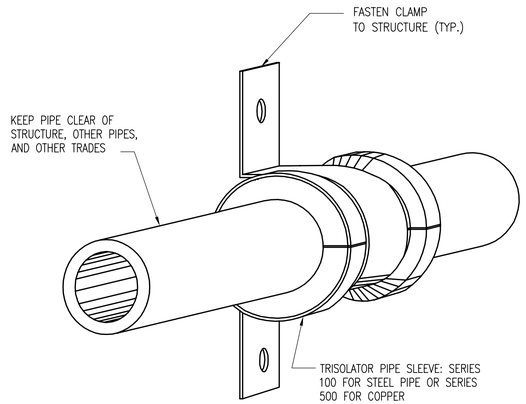

5 ATTACHMENT OF PLUMBING PIPES GREATER THAN 1¼" DIAMETER — NO SCALE

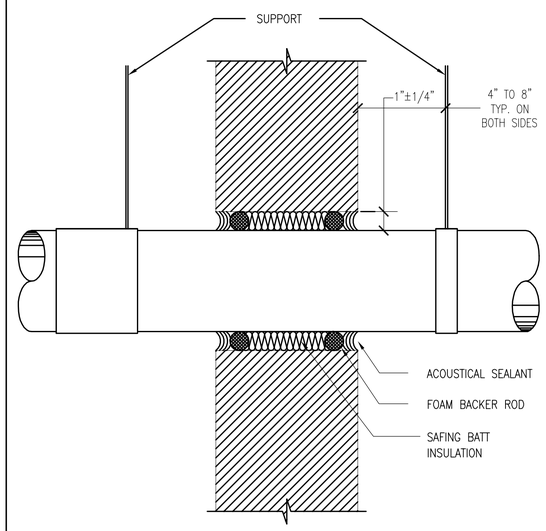

(PIPE 3" DIAMETER. OR GREATER)

6 TYPICAL PIPE PENETRATION THROUGH SOUND–RATED CONSTRUCTION — NO SCALE

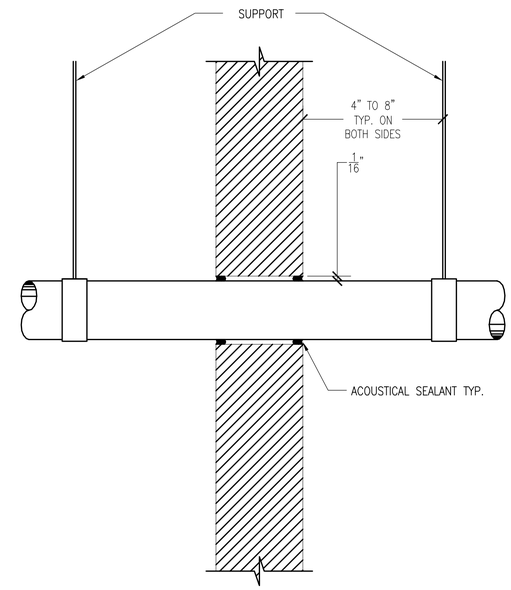

(PIPE 3" DIAMETER OR LESS)

7 TYPICAL PIPE PENETRATION THROUGH SOUND–RATED CONSTRUCTION — NO SCALE

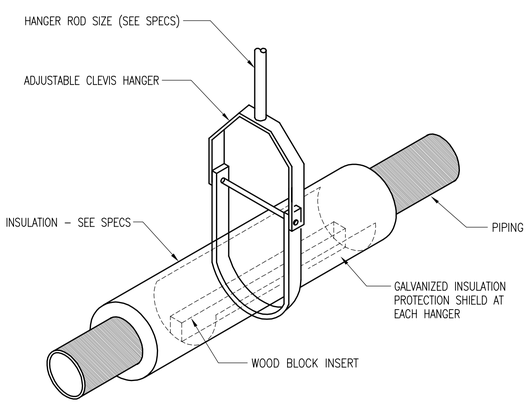

NOTE:

1. SEE STRUCTURAL DRAWINGS FOR HANGER ROD CONNECTION TO STRUCTURE

9 PIPE HANGER AND INSULATION DETAIL — NO SCALE

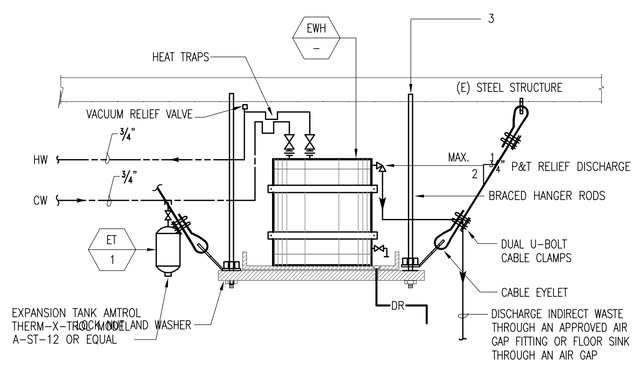

NOTE:

1. USE 3/8" DIA. GALVANIZED THREADED ROADS, UNISTRUT P 5000 OR EQUAL FOR TRAPEZE.
2. ATTACH TO (E) STRUCTURE.

10 ELECTRIC WATER HEATER EWH–1 ABOVE CEILING — NO SCALE

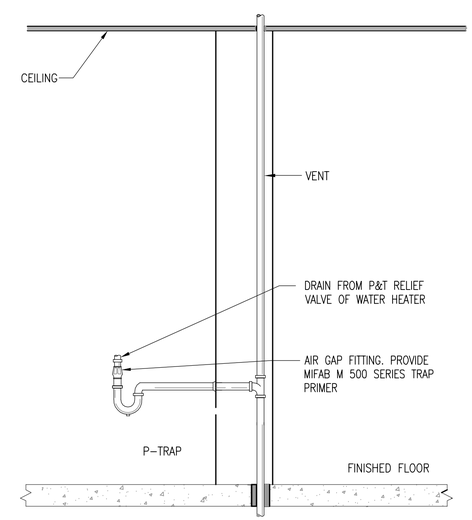

11 INDIRECT DRAIN DETAIL– WATER HEATER — NO SCALE

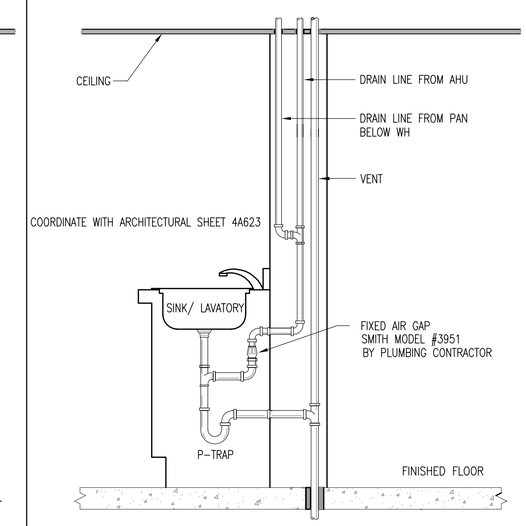

12 INDIRECT DRAIN DETAIL — NO SCALE

3/27/2013 8:50:02 PM

SAN FRANCISCO OAKLAND BAY BRIDGE EAST SPAN SEISMIC SAFETY PROJECT

Jaswinder Gill
DESIGN OVERSIGHT
03/27/13
SIGN OFF DATE

	BY	CHECKED
DESIGN	JOJI THOMAS	ROBERT C. NIXDORF
DETAILS	BY	CHECKED
QUANTITIES	BY	CHECKED

PREPARED FOR THE STATE OF CALIFORNIA DEPARTMENT OF TRANSPORTATION

KAREN Y. WANG
PROJECT ENGINEER

BRIDGE NO
POST MILES 2.0

IERBYS TEMPORARY IMPROVEMENTS - BUILDING

PLUMBING & FIRE PROTECTION DETAILS

SHEET P601

DESIGN DETAIL SHEET (ENGLISH) (REV. 03/14/12)

ORIGINAL SCALE IN INCHES FOR REDUCED PLANS 0 1 2 3

UNIT: 04
PROJECT NUMBER AND PHASE: CONTRACT NO.: 0120F4

DISREGARD PRINTS BEARING EARLIER REVISION DATES

REVISION DATES — SHEET 64 OF 66

C:\Users\cschurr\Documents\56185_Gateway Park - Central_cschurr.rvt

DIST	COUNTY	ROUTE	POST MILES TOTAL PROJECT	SHEET No	TOTAL SHEETS
04	ALA	80	2.0	1204br	1204

JRGK
REGISTERED ENGINEER

03/27/13
DATE

REGISTERED PROFESSIONAL ENGINEER
JAMES R. GROVEK
No. M 34898
MECHANICAL
STATE OF CALIFORNIA

PLANS APPROVAL DATE

The state of California or its officers or agents shall not be responsible for the accuracy or completeness of scanned copies of this plan sheet.

WSP • FLACK + KURTZ
405 HOWARD ST. #500
SAN FRANCISCO, CA 94106

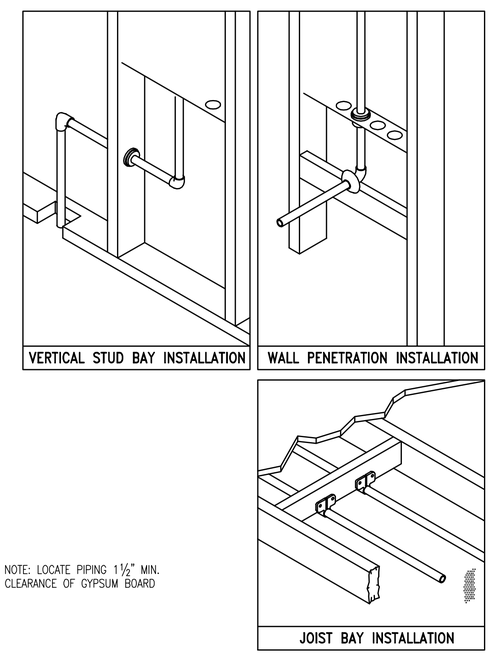

NOTE: LOCATE PIPING 1½" MIN. CLEARANCE OF GYPSUM BOARD

4 ACOUSTO – PLUMBING SYSTEM INSTALLATION — NO SCALE

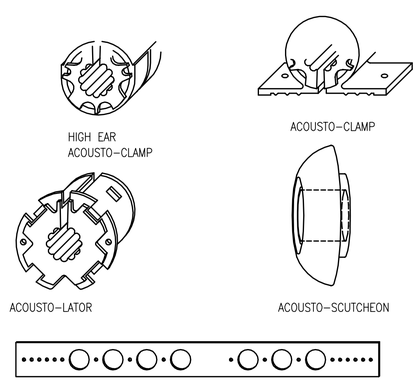

3 ACOUSTO – PLUMBING SYSTEM COMPONENTS — NO SCALE

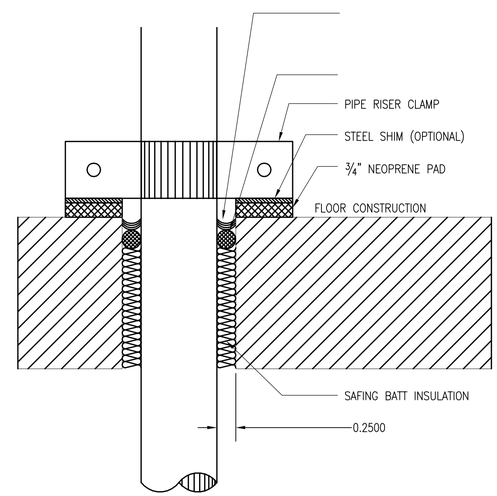

NOTE: LOCATE PIPING 1½" MIN. CLEARANCE OF GYPSUM BOARD

2 PIPE ISOLATION AT FLOOR FOR WASTE PIPES AND RAIN LEADERS — NO SCALE

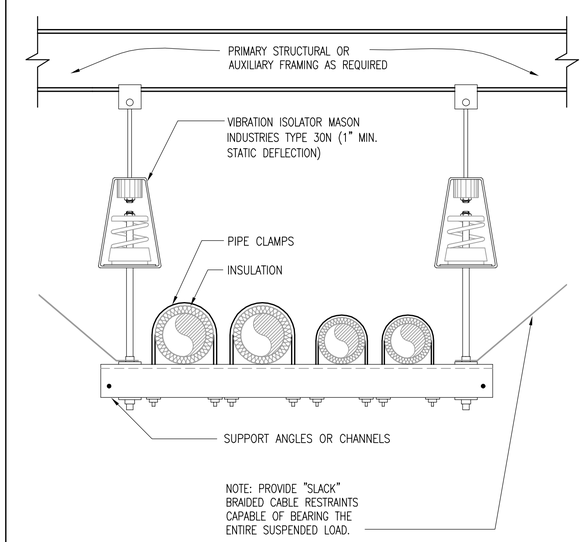

1 TRAPEZE PIPING OR EQUIPMENT SUPPORT — NO SCALE

SAN FRANCISCO OAKLAND BAY BRIDGE
EAST SPAN SEISMIC SAFETY PROJECT

Jaswinder Gill
DESIGN OVERSIGHT

03/27/13
SIGN OFF DATE

	BY	CHECKED
DESIGN	JOJI THOMAS	ROBERT C. NIXDORF
DETAILS	BY	CHECKED
QUANTITIES	BY	CHECKED

PREPARED FOR THE
STATE OF CALIFORNIA
DEPARTMENT OF TRANSPORTATION

KAREN Y. WANG
PROJECT ENGINEER

BRIDGE NO
POST MILES 2.0

IERBYS TEMPORARY IMPROVEMENTS - BUILDING

PLUMBING & FIRE PROTECTION DETAILS

SHEET P602

DESIGN DETAIL SHEET (ENGLISH) (REV. 03/14/12)

ORIGINAL SCALE IN INCHES FOR REDUCED PLANS 0 1 2 3

UNIT: 04
PROJECT NUMBER AND PHASE:
CONTRACT NO.: 0120F4

DISREGARD PRINTS BEARING EARLIER REVISION DATES

REVISION DATES ___ ___ ___ ___

SHEET 65 OF 66

C:\Users\cschurr\Documents\56185_Gateway Park - Central_cschurr.rvt

3/27/2013 8:50:07 PM

DIST	COUNTY	ROUTE	POST MILES TOTAL PROJECT	SHEET No	TOTAL SHEETS
04	ALA	80	2.0	1204bs	1204

JRGK
REGISTERED ENGINEER

03/27/13
DATE

REGISTERED PROFESSIONAL ENGINEER
JAMES R. GROVEK
No. M 34898
MECHANICAL
STATE OF CALIFORNIA

PLANS APPROVAL DATE

The state of California or its officers or agents shall not be responsible for the accuracy or completeness of scanned copies of this plan sheet.

WSP • FLACK + KURTZ
405 HOWARD ST. #500
SAN FRANCISCO, CA 94106

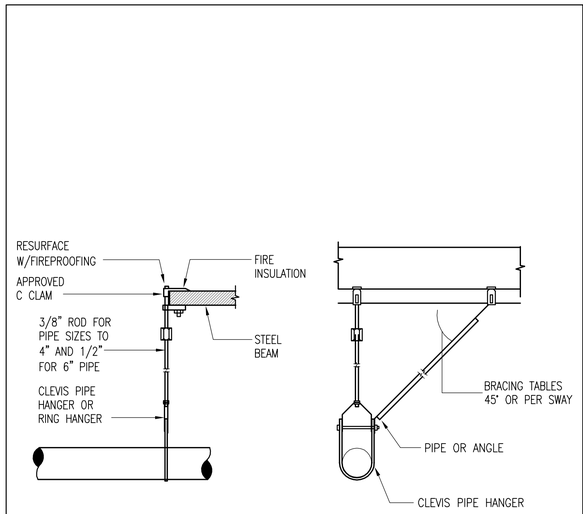

3 SWAY BRACING DETAIL — NO SCALE

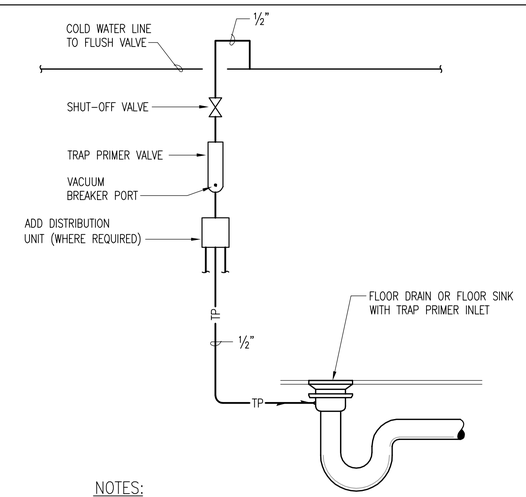

NOTES:

1. PROVIDE ACCESS PANEL IN WALLS AT TRAP PRIMER UNIT LOCATIONS.
2. TRAP PRIMER VALVE SHALL BE MOUNTED ONE FOOT ABOVE THE FINISHED FLOOR FOR EVERY 20 FEET OF PRIMER LINE.
3. INSTALL TRAP PRIMER PIPING AND UNIT PER MANUFACTURER'S RECOMMENDATIONS. PIPING MUST SLOPE TO POINT OF CONNECTION TO DRAIN WITHOUT TRAPS IN PIPING

2 TRAP PRIMER PIPING DETAILS — NO SCALE

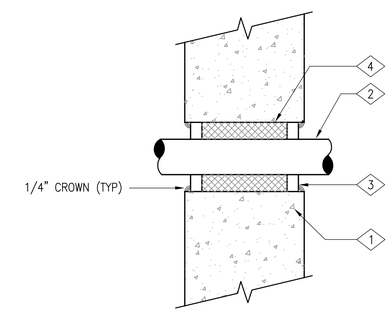

NUMBERED NOTES

1. CONCRETE OR CONCRETE BLOCK WALL
2. STEEL, IRON OR COPPER PIPE (UNINSULATED)
3. SPEC SEAL OR EQUAL PUTTY INSTALLED TO A DEPTH OF 3/4"
4. FIBERGLASS FORMING MATERIAL PACKED INTO WALL CAVITY

SHEET NOTE

1. SYSTEM SHALL MEET REQUIREMENTS OF ASTM E814 (UL1479) AND UL SYSTEM WJ 1020

1 — NO SCALE

3/27/2013 8:50:13 PM

SAN FRANCISCO OAKLAND BAY BRIDGE
EAST SPAN SEISMIC SAFETY PROJECT

Jaswinder Gill
DESIGN OVERSIGHT
03/27/13
SIGN OFF DATE

	BY	CHECKED
DESIGN	JOJI THOMAS	ROBERT C. NIXDORF
DETAILS	BY	CHECKED
QUANTITIES	BY	CHECKED

PREPARED FOR THE
STATE OF CALIFORNIA
DEPARTMENT OF TRANSPORTATION

KAREN Y. WANG
PROJECT ENGINEER

BRIDGE NO
POST MILES 2.0

IERBYS TEMPORARY IMPROVEMENTS - BUILDING
PLUMBING & FIRE PROTECTION DETAILS

SHEET P603

DESIGN DETAIL SHEET (ENGLISH) (REV. 03/14/12)

ORIGINAL SCALE IN INCHES FOR REDUCED PLANS 0 1 2 3

UNIT: 04
PROJECT NUMBER AND PHASE:
CONTRACT NO.: 0120F4

DISREGARD PRINTS BEARING EARLIER REVISION DATES

REVISION DATES				SHEET	OF
				66	66

C:\Users\cschurr\Documents\56185_Gateway Park - Central_cschurr.rvt