DIST.	COUNTY	ROUTE	KILOMETER POST TOTAL PROJECT	SHEET NO.	TOTAL SHEETS
04	SF	80	13.2/13.9	920R7	1204

REGISTERED ENGINEER - CIVIL

12-6-04
PLANS APPROVAL DATE

REGISTERED PROFESSIONAL ENGINEER Marwan N. Nader No. C 054426 Exp. 12/31/13 CIVIL STATE OF CALIFORNIA

The State of California or its officers or agents shall not be responsible for the accuracy or completeness of electronic copies of this plan sheet.

T.Y. LIN / MOFFATT & NICHOL
825 BATTERY STREET
SAN FRANCISCO, CA 94111

Caltrans now has a web site! To get to the web site, go to: http://www.dot.ca.gov

Caltrans Metric

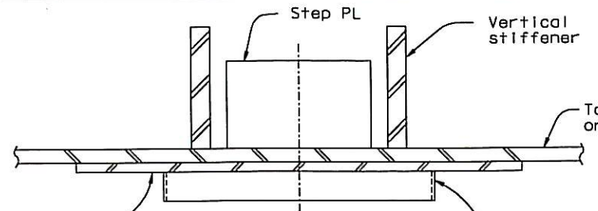

SECTION B-B
1:10

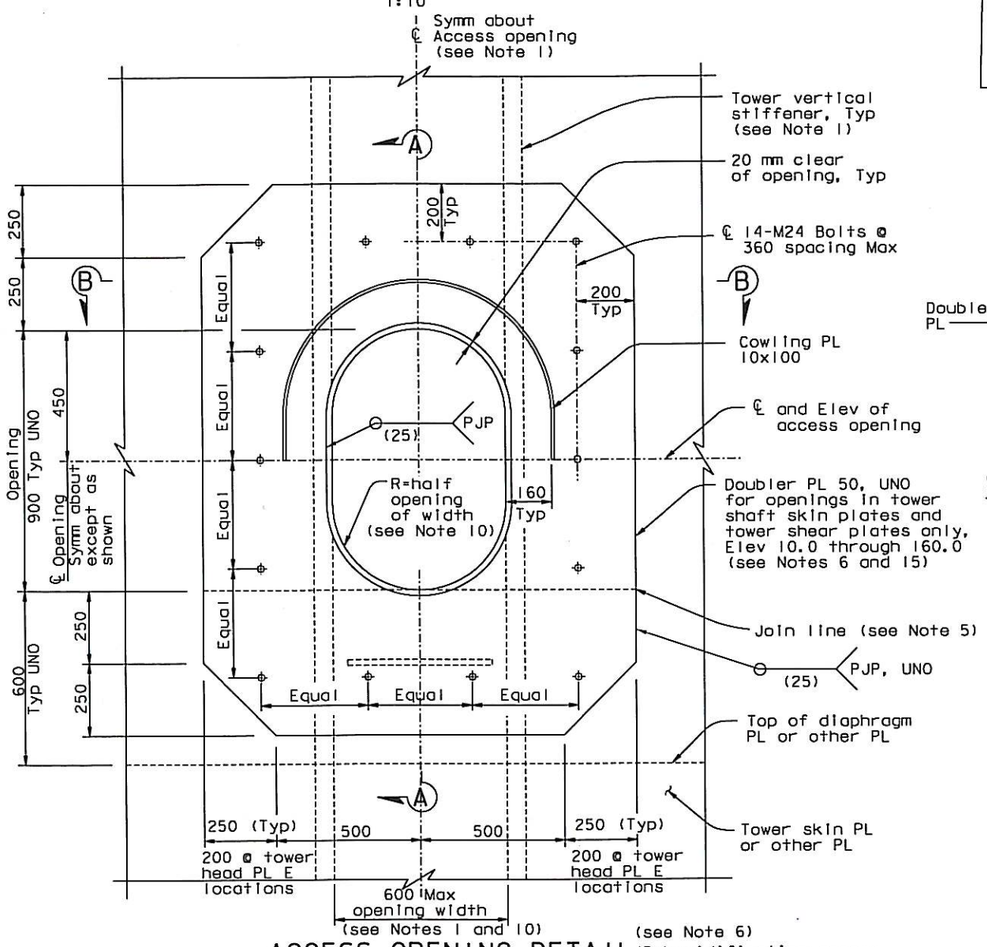

ACCESS OPENING DETAIL
1:10

(see Note 6)
(Dehumidification access opening similar)

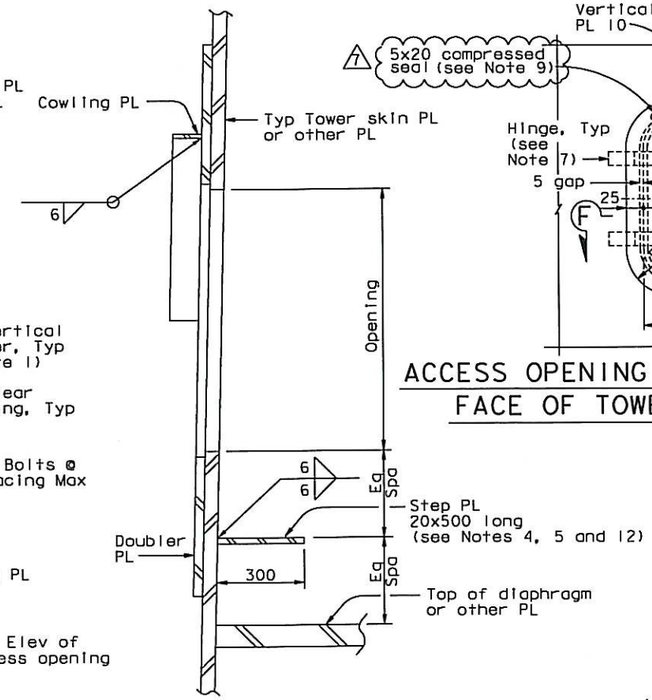

SECTION A-A
1:10

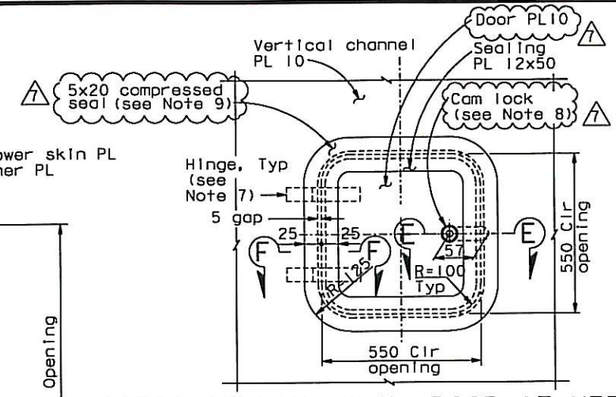

ACCESS OPENING WITH DOOR AT VERTICAL FACE OF TOWER STRUT FACADE
(See Note 14)

NTS

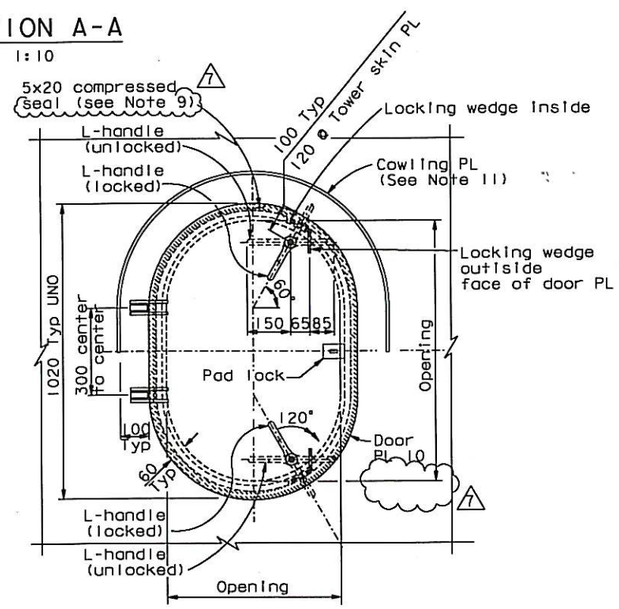

ACCESS OPENING DOOR DETAIL
(See Note 13)

1:10
(Dehumidification access opening door similar)

ALL DIMENSIONS ARE IN MILLIMETERS UNLESS OTHERWISE SHOWN

NOTES:

1. Width of opening is limited to clear distance between stiffeners. For location of access opening and stiffener spacing in tower, see "Tower Shaft Details" sheets.
2. Doors shall be secured by cam locks with locking L-handles and interior release.
3. Door hinges shall be stainless lift-off type with 16 mm pin size 150 kg rated capacity per hinge.
4. Use step PL where door sill is greater than 500 above landing.
5. For access openings at elevations 54.550, 90.55 and 140.550 omit doubler PL below join line. Connect upper portion to strut doubler PL using PJP(25) welds at join line. For strut doubler PL, see "Tower Strut Details" sheets. Location of step plate may be adjusted to clear doubler plate bolts.
6. Access opening shown is for openings in tower shaft skin plates and shear plates. Access openin in tower skirt and tower head are similar. The doubler PL shall match the thickness of the penetrated skirt or tower head PL and shall be connected with a PJP weld 8 mm.
7. Contractor shall provide internally mounted pivot hinges. No part of hinge shall protrude beyond the outside surface of door or facade when door is closed. Hinges shall permit door to swing outwards at least 120°. Each hinge shall be rated to resist 900 N in any direction.
8. Contractor shall provide through-hole mounted thumb turn cam lock.
9. Edges of door shall be sealed with soft urethane foam or equivalent, subject to review and approval of the Engineer. The seal material shall be UV and ozone resistant.
10. Dehumidification access openings shall have R=50 mm typical. Dehumidification access openings at tower head only shall be 680 mm x 900 mm.
11. At interior access opening doors, cowling plates may be omitted, subject to review and approval of the Engineer.
12. Step plate shall be 20x400 mm where tower vertical stiffener spacing is 500 mm.
13. For additional details, see "Tower Access Details No. 4A and No. 4B" sheets.
14. For Section E-E and F-F, see "Tower Access Details No. 4B" sheet.
15. Doubler PL 50 on Tower Head Face F may be clipped to clear Tower Head Diaphragm PL. Minimum edge distance of 50 mm for M24 bolt shall be maintained.

REQUESTS FOR INFORMATION NOT ADDRESSED IN THIS CCO REMAIN IN FORCE

MARK	DATE	DESCRIPTIONS	BY	CH'D	CCO#
7	01/23/13	TOWER ACCESS DOOR	MN	CC	286
6	10/29/10	DOORS AND LADDER CAGES	MN	NV	118
5	10/22/10	TOWER HEAD DETAILS	NV	MN	93
4	05/07/09	DOORS AND LADDER CAGES	MN	NV	118
3	10/31/08	TOWER HEAD DETAILS	MN	NV	93
2	08/15/06	TOWER ACCESS	MN	NV	65
1	07/11/08	TOWER STRUT FACADES AND CROSS BRACING	MN	NV	64

REVISIONS

CONTRACT CHANGE ORDER NO. 286
SHEET 2 OF 6

R. Vaziazadeh/V. Toan/Y.L./W.L./F.C.
DESIGN OVERSIGHT
SIGN OFF DATE 01/23/13

Rev. Date: 5-15-98

DESIGN	BY M. Nader	CHECKED M. Gulyas	
DETAILS	BY G. Baker	CHECKED L. Rus	
QUANTITIES	BY D. Turner	CHECKED J. Leventini	

ORIGINAL SCALE IN MILLIMETERS FOR REDUCED PLANS 0 10 20 30 40 50 60 70 80 90 100

PREPARED FOR THE STATE OF CALIFORNIA DEPARTMENT OF TRANSPORTATION

R. Manzanarez
PROJECT ENGINEER

CU 04
EA 0120F1

BRIDGE NO. 34-0006L/R
KILOMETER POST 13.2/13.9

DISREGARD PRINTS BEARING EARLIER REVISION DATES

REVISION DATES (PRELIMINARY STAGE ONLY)

SAN FRANCISCO OAKLAND BAY BRIDGE
EAST SPAN SEISMIC SAFETY PROJECT
SELF-ANCHORED SUSPENSION BRIDGE
(SUPERSTRUCTURE & TOWER)

TOWER ACCESS DETAILS NO. 4

SHEET 503R7 OF

100 % PS&E

USERNAME => DMinrow DATE PLOTTED => 23 JAN 2013 TIME PLOTTED => 13:25:53

FILE => I:\bb\04-012001\sas\contract plans and cco\cco\cco#286\1-original 01-23-13\dgn\akacc05a.dgn

DIST.	COUNTY	ROUTE	KILOMETER POST TOTAL PROJECT	SHEET NO.	TOTAL SHEETS
04	SF	80	13.2/13.9	920S1R1	1204

REGISTERED ENGINEER - CIVIL

05-07-09
PLANS APPROVAL DATE

REGISTERED PROFESSIONAL ENGINEER Marwan N. Nader No. C 054426 Exp. 12/31/13 CIVIL STATE OF CALIFORNIA

The State of California or its officers or agents shall not be responsible for the accuracy or completeness of electronic copies of this plan sheet.

T.Y. LIN / MOFFATT & NICHOL
825 BATTERY STREET
SAN FRANCISCO, CA 94111

Caltrans now has a web site! To get to the web site, go to: http://www.dot.ca.gov

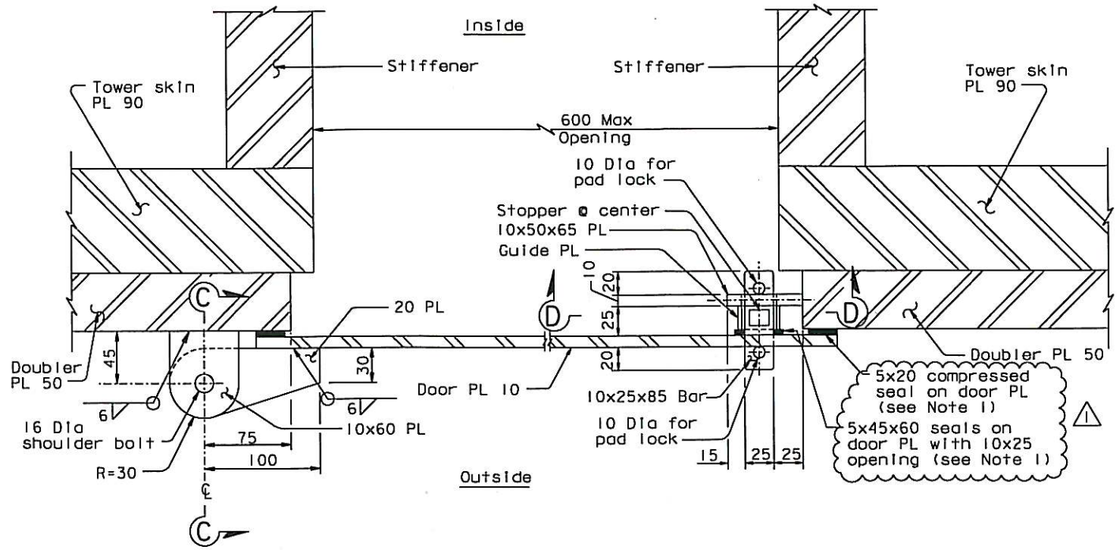

ACCESS OPENING DOOR HINGE AND LOCK DETAIL
1:2.5

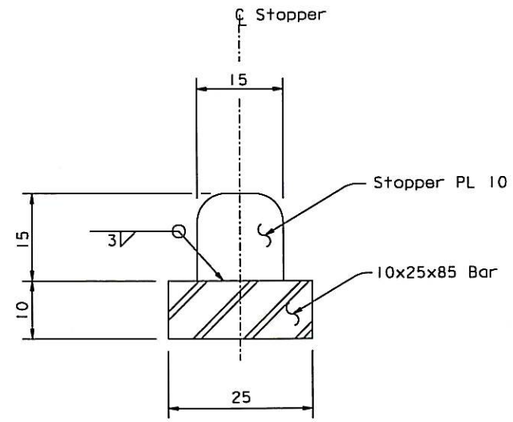

STOPPER DETAIL
2:1

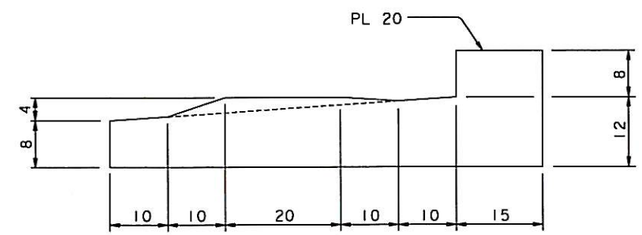

LOCKING WEDGE PROFILE
2:1

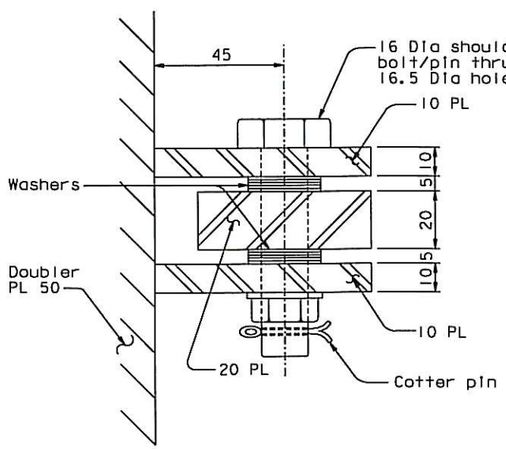

SECTION C-C
1:1

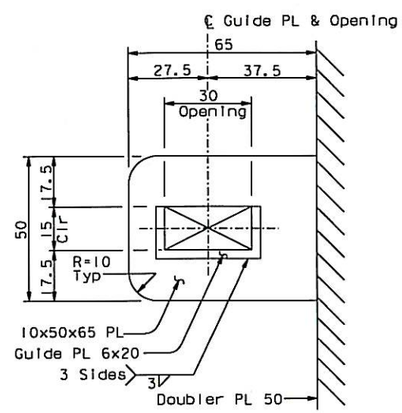

SECTION D-D
1:1

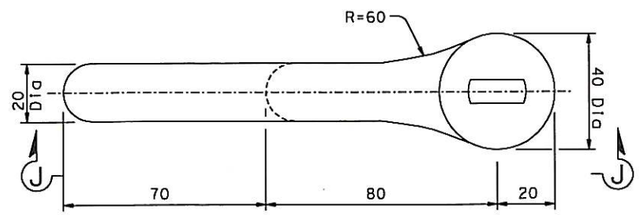

L-HANDLE DETAIL (A709 M GR 345)
1:1

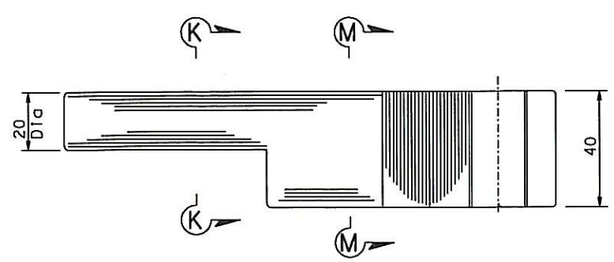

SECTION J-J
1:1

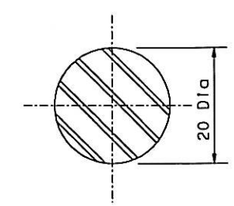

SECTION K-K
2:1

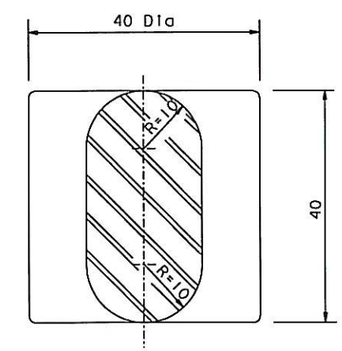

SECTION M-M
2:1

NOTES:

1. Edges of door shall be sealed with soft urethane foam or equivalent, subject to review and approval by the Engineer. The seal material shall be UV and ozone resistant.

CONTRACT CHANGE ORDER NO. 286
SHEET 3 OF 6

REQUESTS FOR INFORMATION NOT ADDRESSED IN THIS CCO REMAIN IN FORCE

ALL DIMENSIONS ARE IN MILLIMETERS UNLESS OTHERWISE SHOWN

MARK	DATE	DESCRIPTIONS	BY	CH'D	CCO#
1	01/23/13	TOWER ACCESS DOOR	MN	CC	286
0	05/01/09	DOORS AND LADDER CAGES	MN	NV	118

REVISIONS

R. Vallizadeh/V. Toan/Y.L./W.L./F.C.
DESIGN OVERSIGHT
SIGN OFF DATE 01/23/13

Rev. Date: 5-18-98

	BY	CHECKED
DESIGN	M. Nader	N. Vo
DETAILS	M. Nader	N. Vo
QUANTITIES	M. Nader	N. Vo

PREPARED FOR THE STATE OF CALIFORNIA DEPARTMENT OF TRANSPORTATION

R. Manzanarez
PROJECT ENGINEER

BRIDGE NO. 34-0006L/R
KILOMETER POST 13.2/13.9

SAN FRANCISCO OAKLAND BAY BRIDGE
EAST SPAN SEISMIC SAFETY PROJECT
SELF-ANCHORED SUSPENSION BRIDGE
(SUPERSTRUCTURE & TOWER)

TOWER ACCESS DETAILS NO. 4A

ORIGINAL SCALE IN MILLIMETERS FOR REDUCED PLANS 0 10 20 30 40 50 60 70 80 90 100

CU 04
EA 0120F1

DISREGARD PRINTS BEARING EARLIER REVISION DATES 05/01/09

REVISION DATES (PRELIMINARY STAGE ONLY)

SHEET 503S1R1 OF

FILE => I:\bb\04-012001\sas\contract plans and cco\cco\cco#286\1-original 01-23-13\dgn\akacc05c.dgn

100 % PS&E

USERNAME => DWinrow DATE PLOTTED => 23 JAN 2013 TIME PLOTTED => 13:27:37

DIST.	COUNTY	ROUTE	KILOMETER POST TOTAL PROJECT	SHEET NO.	TOTAL SHEETS
04	SF	80	13.2/13.9	92052R2	1204

REGISTERED ENGINEER - CIVIL

05-07-09
PLANS APPROVAL DATE

REGISTERED PROFESSIONAL ENGINEER Marwan N. Nader No. C 054426 Exp. 12/31/13 CIVIL STATE OF CALIFORNIA

The State of California or its officers or agents shall not be responsible for the accuracy or completeness of electronic copies of this plan sheet.

T.Y. LIN / MOFFATT & NICHOL
825 BATTERY STREET
SAN FRANCISCO, CA 94111

Caltrans now has a web site! To get to the web site, go to: http://www.dot.ca.gov

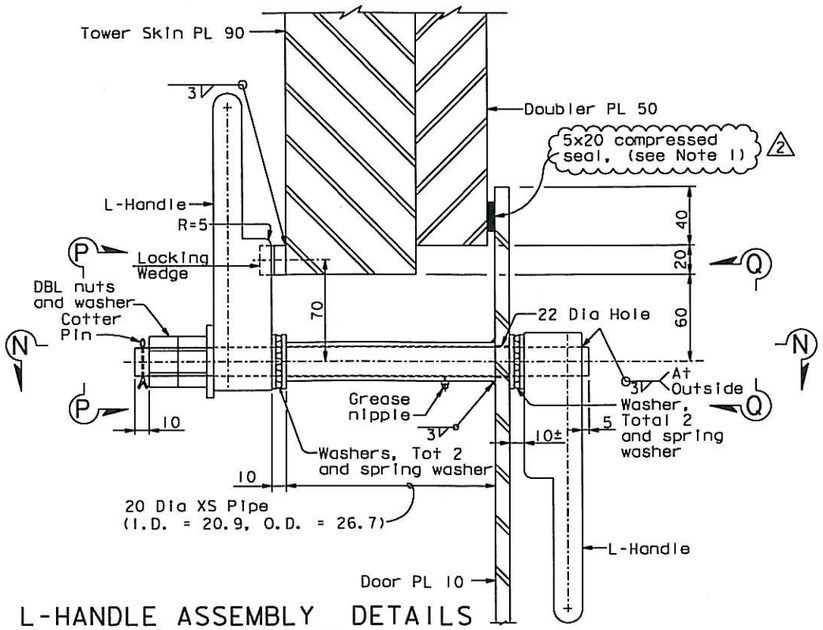

L-HANDLE ASSEMBLY DETAILS

1:2
(For Tower Skin PL)

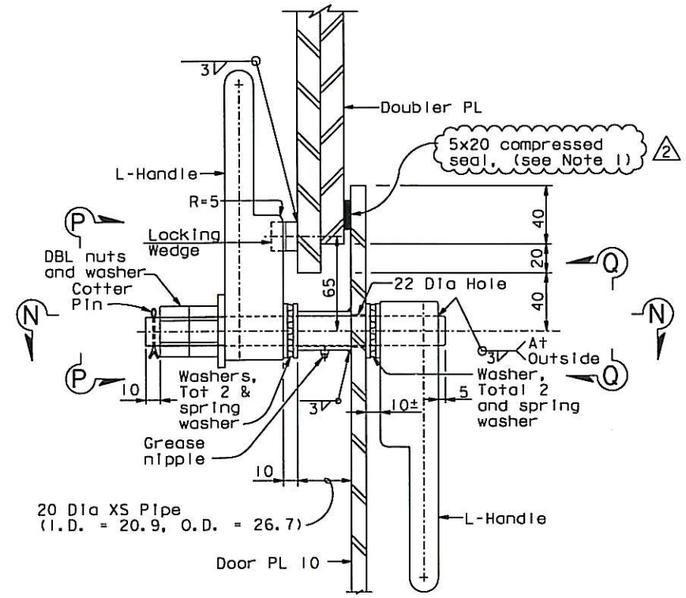

L-HANDLE ASSEMBLY DETAILS

1:2
(Typical)

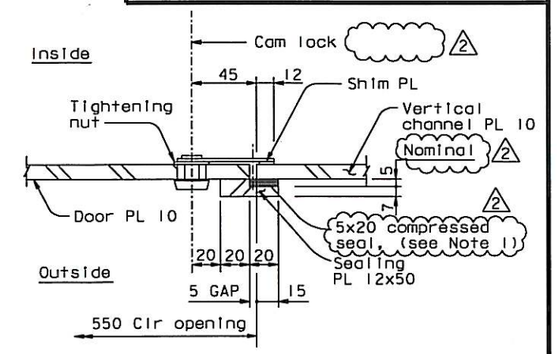

SECTION E-E

1:2

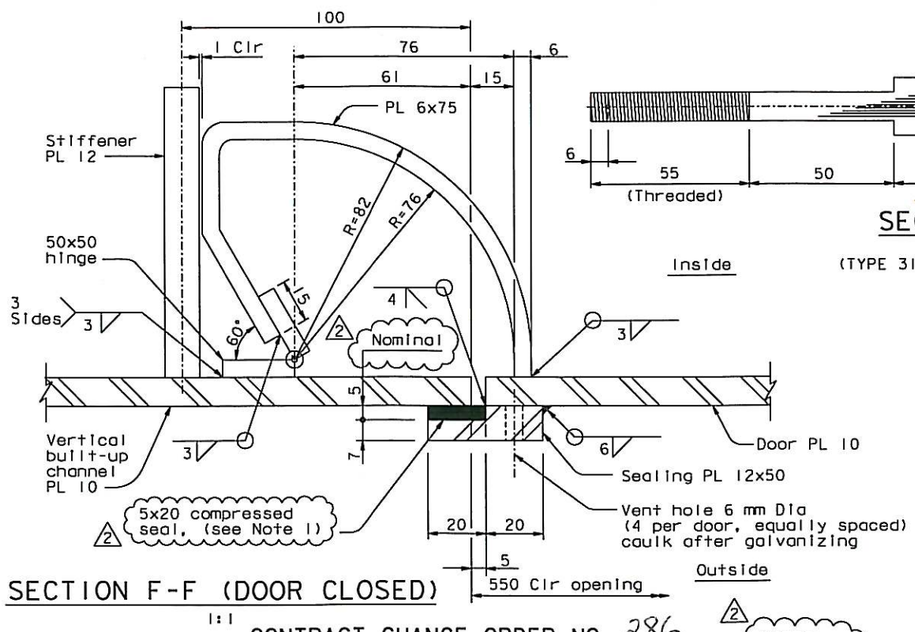

SECTION F-F (DOOR CLOSED)

1:1

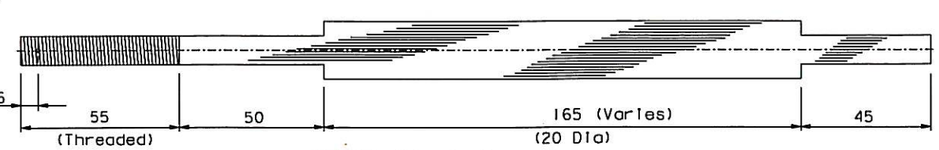

SECTION N-N (Show shaft only)

1:1
(TYPE 316 STAINLESS STEEL ROD)

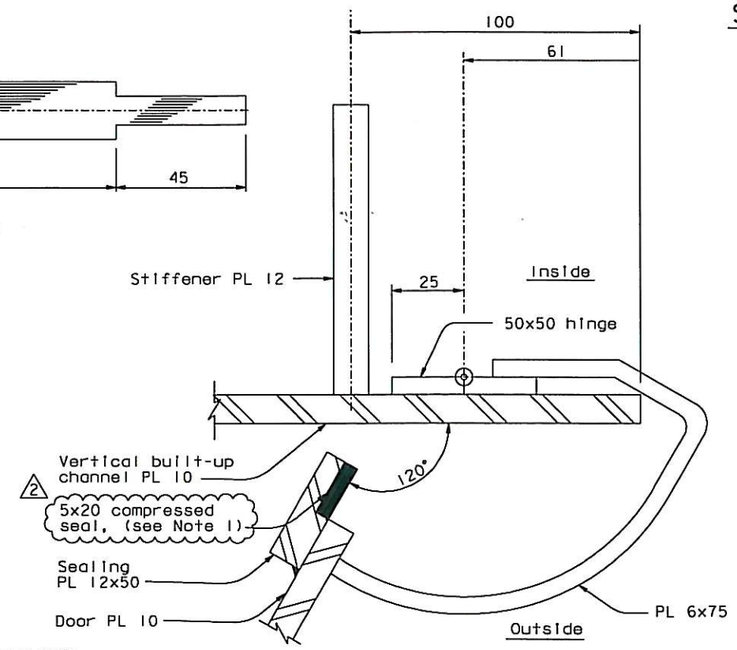

SECTION F-F (DOOR OPEN)

1:1

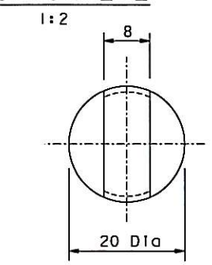

SECTION P-P

1:4

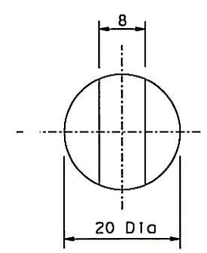

SECTION Q-Q

1:4

ALL DIMENSIONS ARE IN MILLIMETERS UNLESS OTHERWISE SHOWN

CONTRACT CHANGE ORDER NO. 286
SHEET 4 OF 6

REQUESTS FOR INFORMATION NOT ADDRESSED IN THIS CCO REMAIN IN FORCE

NOTES:
1. Edges of door shall be sealed with soft urethane foam or equivalent, subject to review and approval by the Engineer. The seal material shall be UV and ozone resistant.

MARK	DATE	DESCRIPTIONS	BY	CH'D	CCO#
2	01/23/13	TOWER ACCESS DOOR	MN	CC	286
1	10/29/10	DOORS AND LADDER CAGES	MN	NV	118
0	05/07/09	DOORS AND LADDER CAGES	MN	NV	118

REVISIONS

R. Vallzadeh/V. Toan/Y.L./W.L./F.C.
DESIGN OVERSIGHT
Roya Vallzadeh / Vong P. Toan / Y. Liu
SIGN OFF DATE 01/23/13

Rev. Date: 5-18-98

	BY	CHECKED
DESIGN	M. Nader	N. Vo
DETAILS	M. Nader	N. Vo
QUANTITIES	M. Nader	N. Vo

PREPARED FOR THE STATE OF CALIFORNIA DEPARTMENT OF TRANSPORTATION

R. Manzanarez
PROJECT ENGINEER

BRIDGE NO. 34-0006L/R
KILOMETER POST 13.2/13.9

SAN FRANCISCO OAKLAND BAY BRIDGE
EAST SPAN SEISMIC SAFETY PROJECT
SELF-ANCHORED SUSPENSION BRIDGE
(SUPERSTRUCTURE & TOWER)

TOWER ACCESS DETAILS NO. 4B

ORIGINAL SCALE IN MILLIMETERS FOR REDUCED PLANS 0 10 20 30 40 50 60 70 80 90 100

CU 04
EA 0120F1

DISREGARD PRINTS BEARING EARLIER REVISION DATES

REVISION DATES (PRELIMINARY STAGE ONLY) 05/07/09

SHEET 503S2R2 OF

FILE => I:\bb\04-0120F1\sas\contract plans and cco\cco\cco#286\1-original 01-23-13\dgn\akacc05d.dgn

100 % PS&E

USERNAME => DWinrow DATE PLOTTED => 23 JAN 2013 TIME PLOTTED => 13:28:23

DIST.	COUNTY	ROUTE	KILOMETER POST TOTAL PROJECT	SHEET NO.	TOTAL SHEETS
04	SF	80	13.2/13.9	920S3R2	1204

REGISTERED ENGINEER - CIVIL

05-07-09
PLANS APPROVAL DATE

REGISTERED PROFESSIONAL ENGINEER Marwan N. Nader No. C 054426 Exp. 12/31/13 CIVIL STATE OF CALIFORNIA

The State of California or its officers or agents shall not be responsible for the accuracy or completeness of electronic copies of this plan sheet.

T.Y. LIN / MOFFATT & NICHOL
825 BATTERY STREET
SAN FRANCISCO, CA 94111

Caltrans now has a web site! To get to the web site, go to: http://www.dot.ca.gov

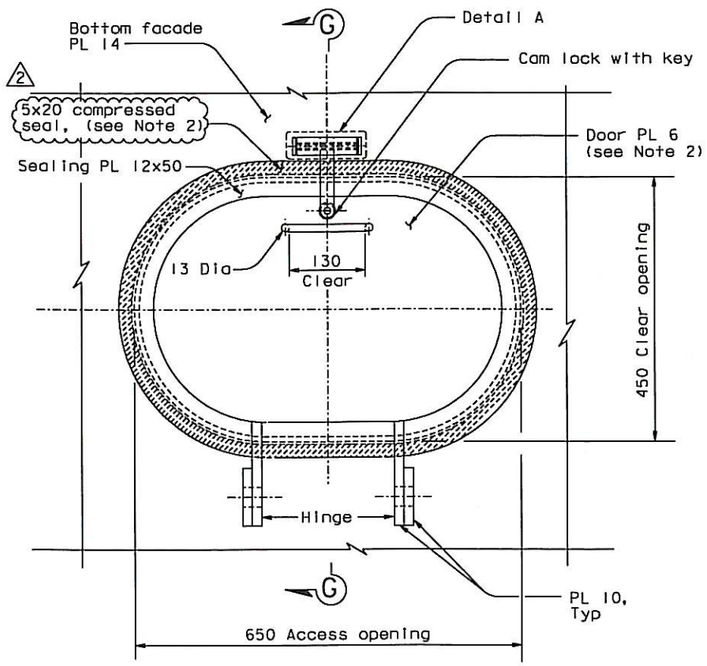

PLAN
BOTTOM FACADE ACCESS OPENING
1:20

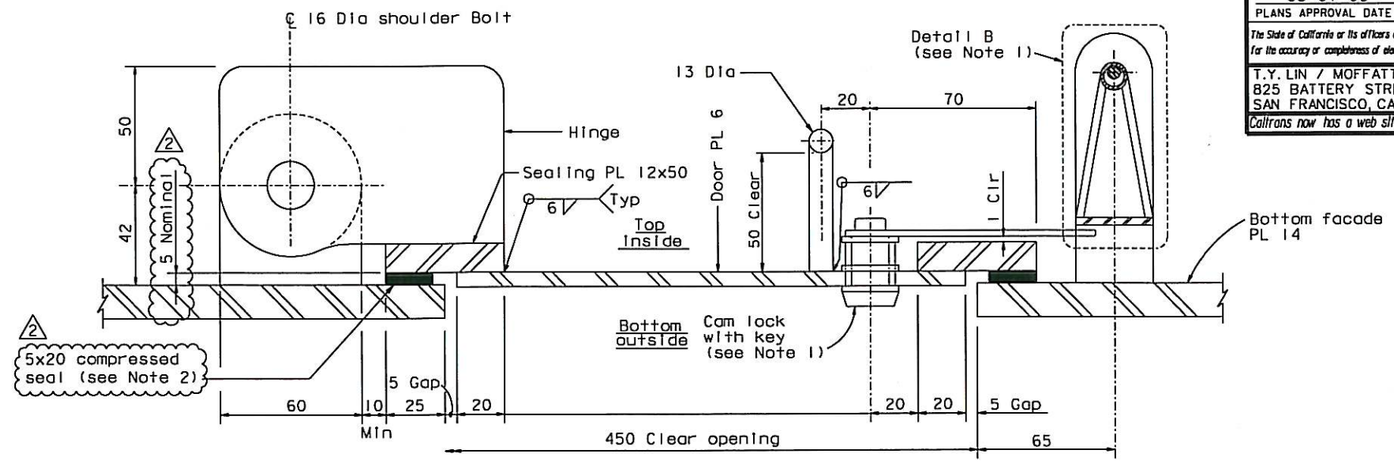

SECTION G-G
1:5

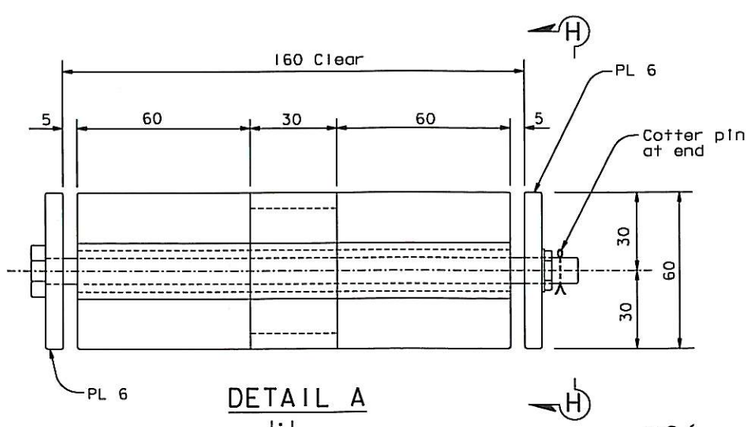

DETAIL A
1:1

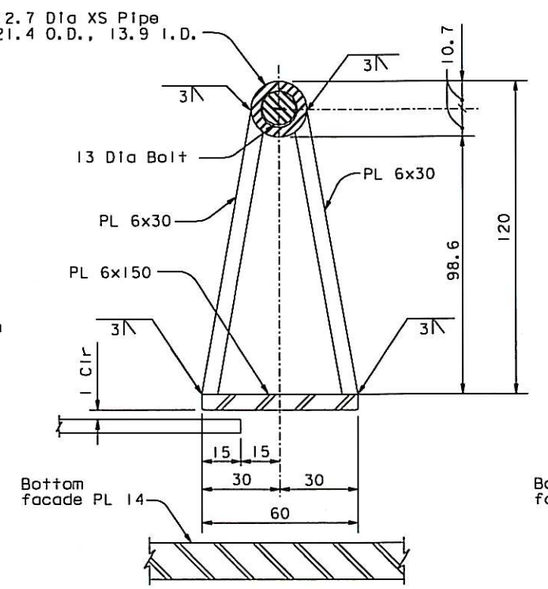

DETAIL B
NTS

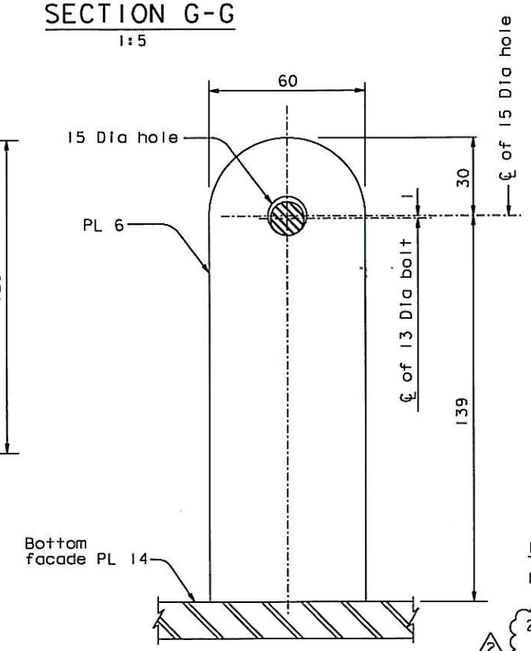

SECTION H-H
NTS

NOTES:

1. Provide through-hole mounted cam lock with key at bottom facade Elev 18 and 65 m only.
2. Edges of door shall be sealed with soft urethane foam or equivalent, subject to review and approval by the Engineer. The seal material shall be UV and ozone resistant.

CONTRACT CHANGE ORDER NO. 286
SHEET 5 OF 6

REQUESTS FOR INFORMATION NOT ADDRESSED IN THIS CCO REMAIN IN FORCE

MARK	DATE	DESCRIPTIONS	BY	CH'D	CCO#
2	01/23/13	TOWER ACCESS DOOR	MN	CC	286
1	10/29/10	DOORS AND LADDER CAGES	MN	NV	118
0	05/07/09	DOORS AND LADDER CAGES	MN	NV	118

REVISIONS

R. Vallizadeh/V. Toan/Y.L./N.L./F.C.
DESIGN OVERSIGHT
SIGN OFF DATE 01/23/13

Rev. Date: 5-18-98

DESIGN	BY M. Nader	CHECKED N. Vo	
DETAILS	BY M. Nader	CHECKED N. Vo	
QUANTITIES	BY M. Nader	CHECKED N. Vo	

ORIGINAL SCALE IN MILLIMETERS FOR REDUCED PLANS 0 10 20 30 40 50 60 70 80 90 100

PREPARED FOR THE STATE OF CALIFORNIA DEPARTMENT OF TRANSPORTATION

ALL DIMENSIONS ARE IN MILLIMETERS UNLESS OTHERWISE SHOWN

R. Manzanarez
PROJECT ENGINEER

BRIDGE NO. 34-0006L/R
KILOMETER POST 13.2/13.9

CU 04
EA 0120F1

DISREGARD PRINTS BEARING EARLIER REVISION DATES 05/07/09

SAN FRANCISCO OAKLAND BAY BRIDGE
EAST SPAN SEISMIC SAFETY PROJECT
SELF-ANCHORED SUSPENSION BRIDGE
(SUPERSTRUCTURE & TOWER)

TOWER ACCESS DETAILS NO. 4C

REVISION DATES (PRELIMINARY STAGE ONLY)

SHEET 503S3R2 OF

FILE => I:\bb\04-012001\sas\contract plans and cco\cco\cco#286\1-original 01-23-13\dgn\akacc05a.dgn

100 % PS&E

USERNAME => DWinrow DATE PLOTTED => 23 JAN 2013 TIME PLOTTED => 13:29:04

DIST.	COUNTY	ROUTE	KILOMETER POST TOTAL PROJECT	SHEET NO.	TOTAL SHEETS
04	SF	80	13.2/13.9	920S4R1	1204

REGISTERED ENGINEER - CIVIL

10-29-10

PLANS APPROVAL DATE

REGISTERED PROFESSIONAL ENGINEER Marwan N. Nader No. C 054426 Exp. 12/31/13 CIVIL STATE OF CALIFORNIA

The State of California or its officers or agents shall not be responsible for the accuracy or completeness of electronic copies of this plan sheet.

T.Y. LIN / MOFFATT & NICHOL
825 BATTERY STREET
SAN FRANCISCO, CA 94111

Caltrans now has a web site! To get to the web site, go to: http://www.dot.ca.gov

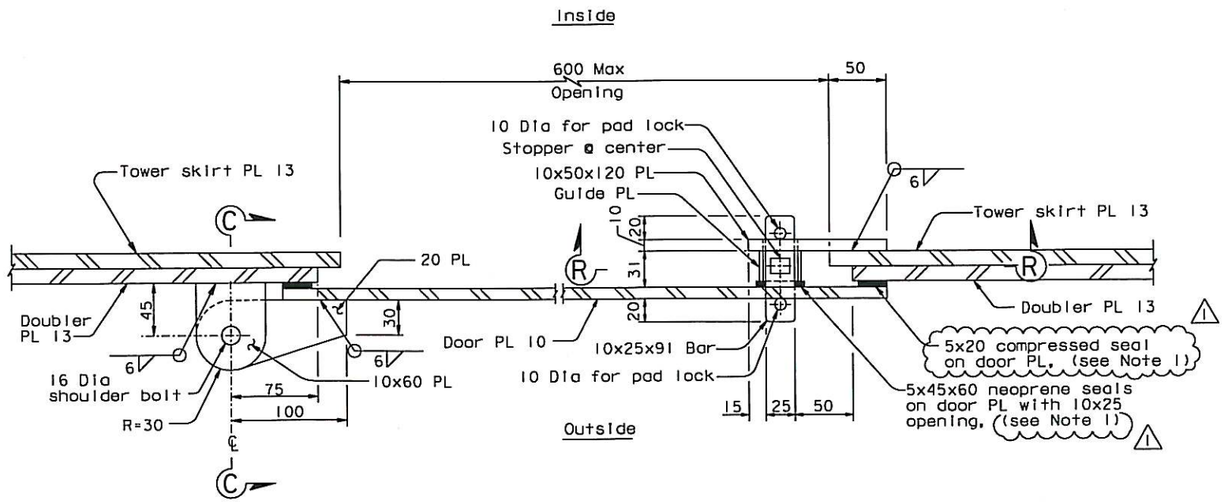

ACCESS OPENING DOOR HINGE AND LOCK DETAIL (FOR TOWER SKIRT PL)

1:2.5

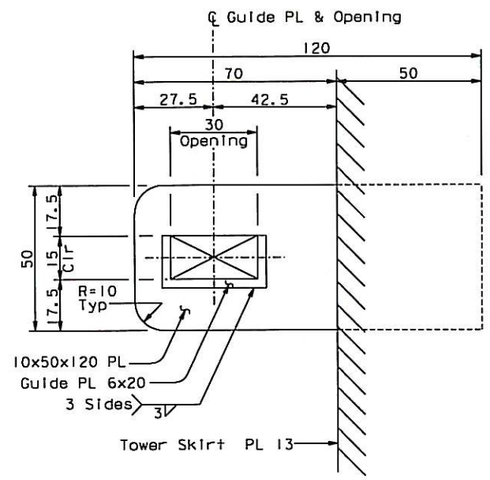

SECTION R-R

1:10

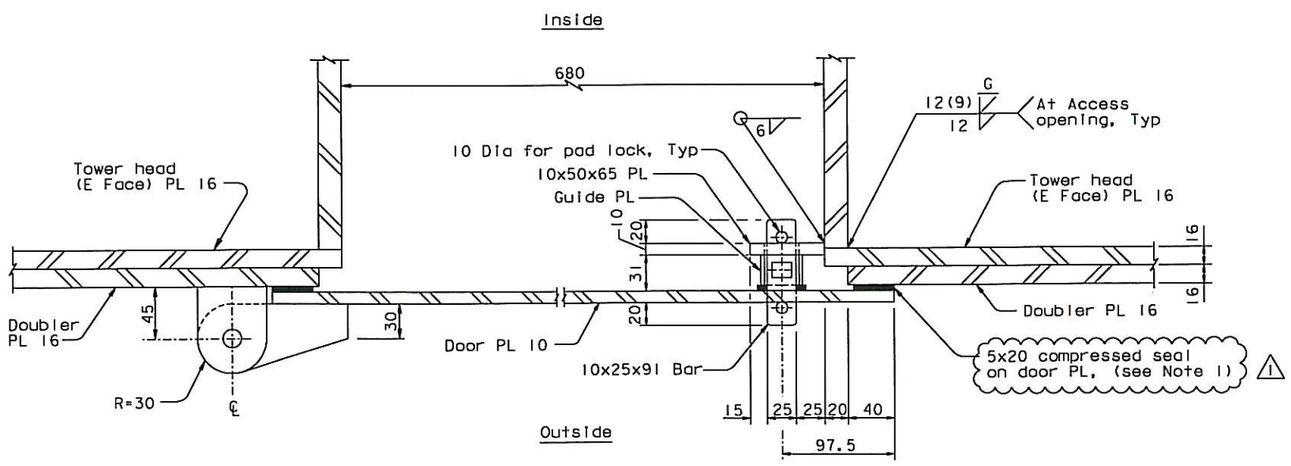

ACCESS OPENING DOOR HINGE AND LOCK DETAIL (FOR TOWER HEAD PL)

1:2.5

NOTES:

1. Edges of door shall be sealed with soft urethane foam or equivalent, subject to review and approval by the Engineer. The seal material shall be UV and ozone resistant.

CONTRACT CHANGE ORDER NO. 286
SHEET 6 OF 6

REQUESTS FOR INFORMATION NOT ADDRESSED IN THIS CCO REMAIN IN FORCE

ALL DIMENSIONS ARE IN MILLIMETERS UNLESS OTHERWISE SHOWN

R. Vallizadeh/V. Toan/Y.L./W.L./F.C.
DESIGN OVERSIGHT
SIGN OFF DATE 01/23/13

MARK	DATE	DESCRIPTIONS	BY	CH'D	CCO#
1	01/23/13	TOWER ACCESS DOOR	MN	CC	286
0	10/29/10	DOORS AND LADDER CAGES	MN	NV	118

REVISIONS

Rev. Date: 5-18-98

	BY	CHECKED
DESIGN	M. Nader	N. Vo
DETAILS	M. Nader	N. Vo
QUANTITIES	M. Nader	N. Vo

ORIGINAL SCALE IN MILLIMETERS FOR REDUCED PLANS 0 10 20 30 40 50 60 70 80 90 100

PREPARED FOR THE STATE OF CALIFORNIA DEPARTMENT OF TRANSPORTATION

R. Manzanarez
PROJECT ENGINEER

BRIDGE NO. 34-0006L/R
KILOMETER POST 13.2/13.9

CU 04
EA 0120F1

DISREGARD PRINTS BEARING EARLIER REVISION DATES → 10/29/10

REVISION DATES (PRELIMINARY STAGE ONLY)

SAN FRANCISCO OAKLAND BAY BRIDGE
EAST SPAN SEISMIC SAFETY PROJECT
SELF-ANCHORED SUSPENSION BRIDGE
(SUPERSTRUCTURE & TOWER)

TOWER ACCESS DETAILS NO. 4D

SHEET 503S4R1 OF

100 % PS&E

USERNAME => DWinrow DATE PLOTTED => 23 JAN 2013 TIME PLOTTED => 13:29:55

FILE => I:\bb\04-012001\sas\contract plans and cco\cco\cco#286\1-original 01-23-13\dgn\akacc05f.dgn