DIST.	COUNTY	ROUTE	KILOMETER POST TOTAL PROJECT	SHEET NO.	TOTAL SHEETS
04	SF	80	13.2/13.9	854R2	1204

REGISTERED ENGINEER - CIVIL

12-6-04
PLANS APPROVAL DATE

REGISTERED PROFESSIONAL ENGINEER Marwan N. Nader No. C 054426 Exp. 12/31/11 CIVIL STATE OF CALIFORNIA

The State of California or its officers or agents shall not be responsible for the accuracy or completeness of electronic copies of this plan sheet.

T.Y. LIN / MOFFATT & NICHOL
825 BATTERY STREET
SAN FRANCISCO, CA 94111

Caltrans now has a web site! To get to the web site, go to: http://www.dot.ca.gov

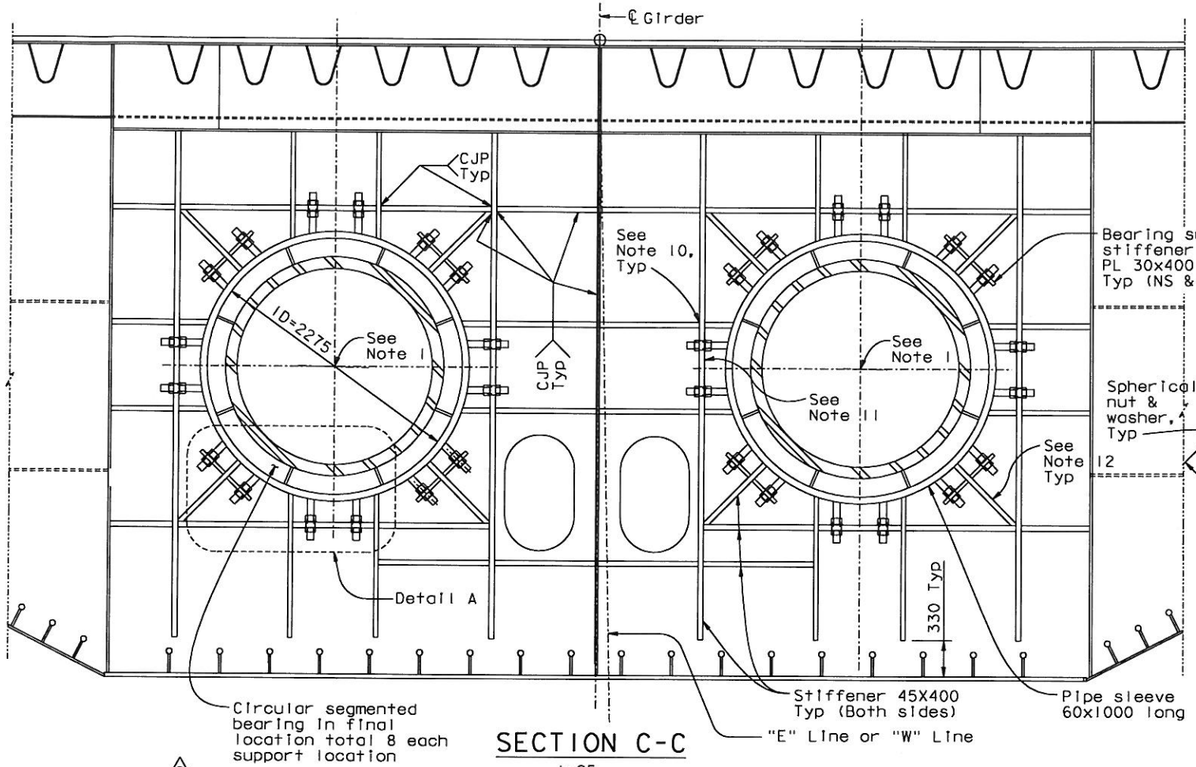

SECTION C-C
1:25

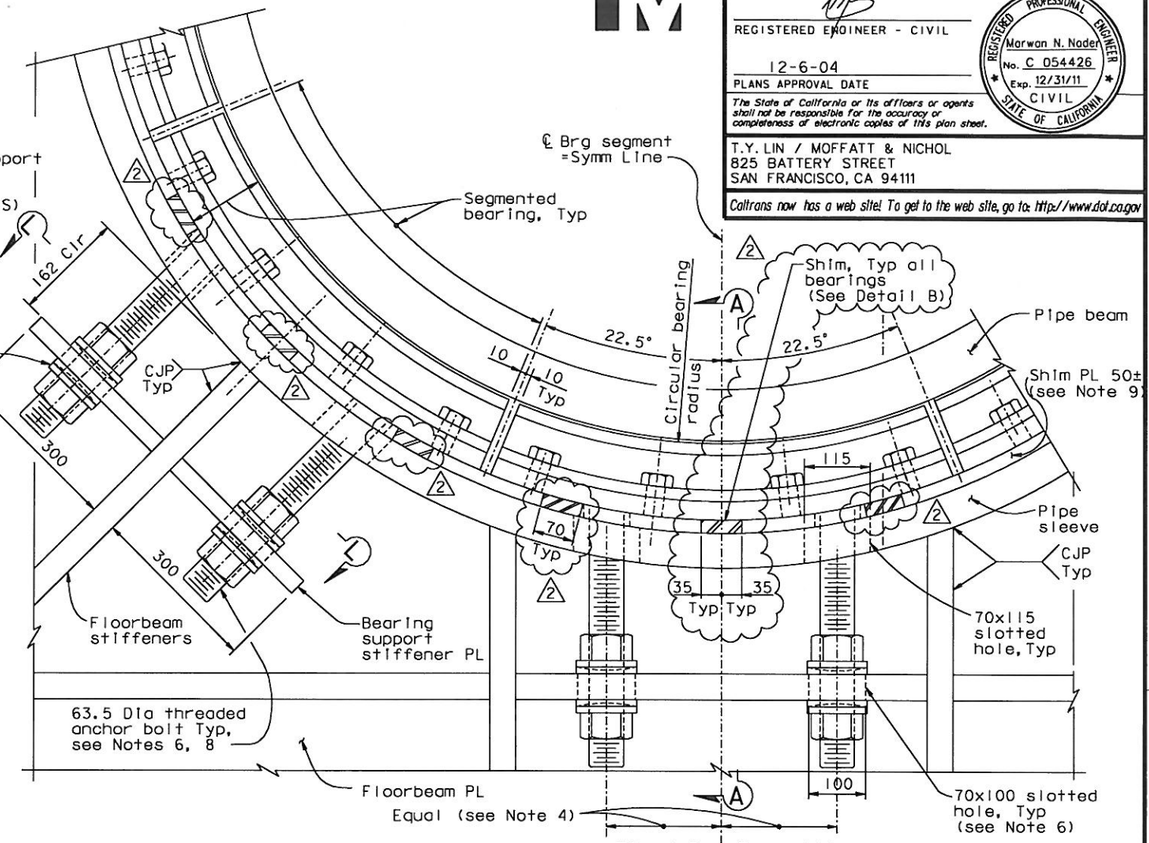

DETAIL A
NTS

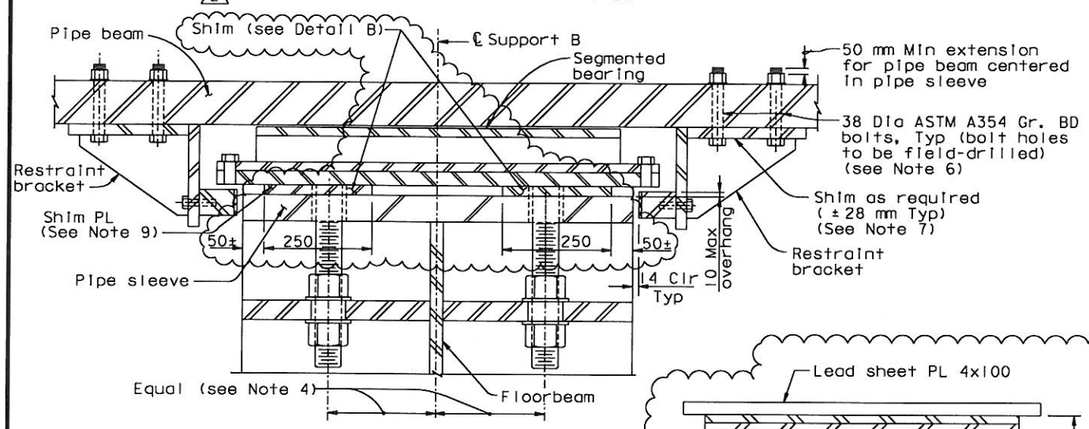

SECTION A-A
NTS

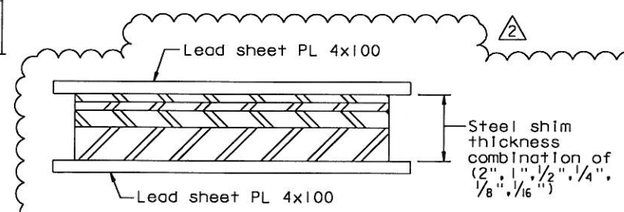

DETAIL B (See Shim Notes)
NTS

10. At the Contractor's option, the horizontal stiffener may be made continuous and the vertical stiffener discontinuous.
11. At the Contractor's option, a CJP with backing to remain may be used in lieu of a CJP to connect the floorbeam web and vertical stiffener between the horizontal stiffeners.
12. At the Contractor's option, a 32 mm double fillet weld may be used in lieu of a CJP on diagonal stiffeners to floorbeam web between hinge pipe sleeves and vertical/horizontal stiffeners.

SHIM NOTES:

1. Steel shims shall be ungalvanized A36 or A709.
2. Lead sheeting shall be placed between steel shims and the permanent pipe sleeves and bearing anchor plates.
3. Steel shims shall be installed tight during bearing pad gap adjustment and shall remain in the permanent grout.
4. Steel shims shall not support the Skyway span in lieu of the temporary strongback system.

NOTES:

1. For locations of BBIW, BBOE, BBOW and BBIE, see "Hinge A Geometry Layout" sheets.
2. For details not shown, see "Floorbeam at East Transition No. 10" sheet.
3. For fixed bearing Type III, see "Hinge A Details No. 7" sheet.
4. Verify bearing anchor bolt spacing before drilling oversize bolt holes.
5. For Section L-L, see "Hinge A Details No. 6" sheet.
6. The bolt sizes shown correspond to US Standard bolt sizes.
7. Shim as required to align restrainer bracket bearing pad with pipe sleeve.
8. The Contractor shall furnish new 63.5x530 long ASTM A449 galvanized threaded rods for fixed fixed bearing Type III, and shall verify fit into drilled and tapped holes in existing anchor plates.
9. At the Contractor's option, the shim PL may be replaced with high strength non-shrink grout, subject to review and approval of the Engineer.

CONTRACT CHANGE ORDER NO. 276
SHEET 2 OF 3

REQUESTS FOR INFORMATION NOT ADDRESSED IN THIS CCO REMAIN IN FORCE

ALL DIMENSIONS ARE IN MILLIMETERS UNLESS OTHERWISE SHOWN

R. Vallzadeh/V. Toan/Y.L./W.L./F.C.
DESIGN OVERSIGHT
Roy Vallzadeh / Vong Toan / Y. Liu
SIGN OFF DATE 12/06/12

MARK	DATE	DESCRIPTIONS	BY	CH'D	CCO#
2	12/06/12	HINGE A PIPE BEAM SHIMS	NV	MN	276
1	07/30/10	HINGE A MODIFICATIONS	MN	NV	120

REVISIONS

	BY	CHECKED
DESIGN	M. Nader	N. Vo
DETAILS	G. Baker	N. Vo
QUANTITIES	G. Baker	N. Vo

PREPARED FOR THE STATE OF CALIFORNIA DEPARTMENT OF TRANSPORTATION

R. Manzanarez
PROJECT ENGINEER

BRIDGE NO. 34-0006L/R
KILOMETER POST 13.2/13.9

SAN FRANCISCO OAKLAND BAY BRIDGE
EAST SPAN SEISMIC SAFETY PROJECT
SELF-ANCHORED SUSPENSION BRIDGE
(SUPERSTRUCTURE & TOWER)

HINGE A DETAILS NO. 3

Rev. Date: 5-18-98

ORIGINAL SCALE IN MILLIMETERS FOR REDUCED PLANS 0 10 20 30 40 50 60 70 80 90 100

CU 04
EA 0120F1

DISREGARD PRINTS BEARING EARLIER REVISION DATES → 04/05/12 07/07/12 12/19/12

SHEET 437R2 OF

FILE => I:\bb\04-012001\sas\contract plans and cco\cco\cco#276\1-original 12-06-12\dgn\ahhng03.dgn

USERNAME => PHUA DATE PLOTTED => 05 DEC 2012 TIME PLOTTED => 10:18:47

100 % PS&E

DIST.	COUNTY	ROUTE	KILOMETER POST TOTAL PROJECT	SHEET NO.	TOTAL SHEETS
04	SF	80	13.2/13.9	855R2	1204

REGISTERED ENGINEER - CIVIL

12-6-04
PLANS APPROVAL DATE

The State of California or its officers or agents shall not be responsible for the accuracy or completeness of electronic copies of this plan sheet.

REGISTERED PROFESSIONAL ENGINEER Marwan N. Nader No. C 054426 Exp. 12/31/11 CIVIL STATE OF CALIFORNIA

T.Y. LIN / MOFFATT & NICHOL
825 BATTERY STREET
SAN FRANCISCO, CA 94111

Caltrans now has a web site! To get to the web site, go to: http://www.dot.ca.gov

Caltrans Metric

SHIM NOTES: 2

1. Steel shims shall be ungalvanized A36 or A709.
2. Lead sheeting shall be placed between steel shims and the permanent pipe sleeves and bearing anchor plates.
3. Steel shims shall be installed tight during bearing pad gap adjustment and shall remain in the permanent grout.
4. Steel shims shall not support the Skyway span in lieu of the temporary strongback system.

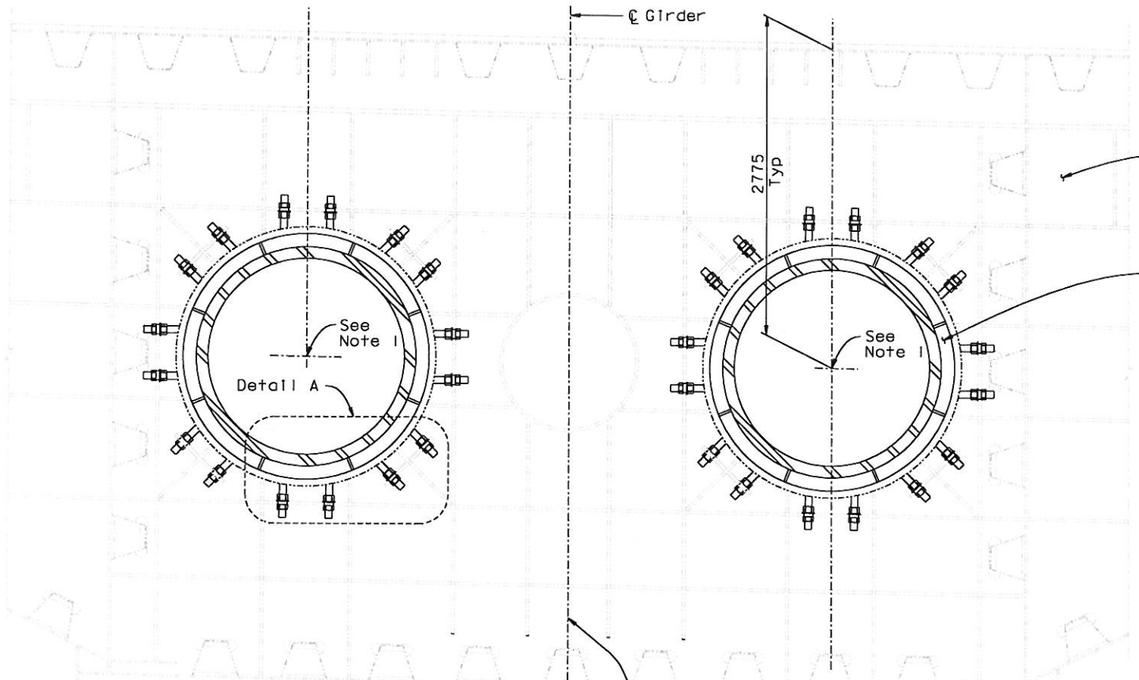

SECTION D-D (Section E-E similar)
1:25

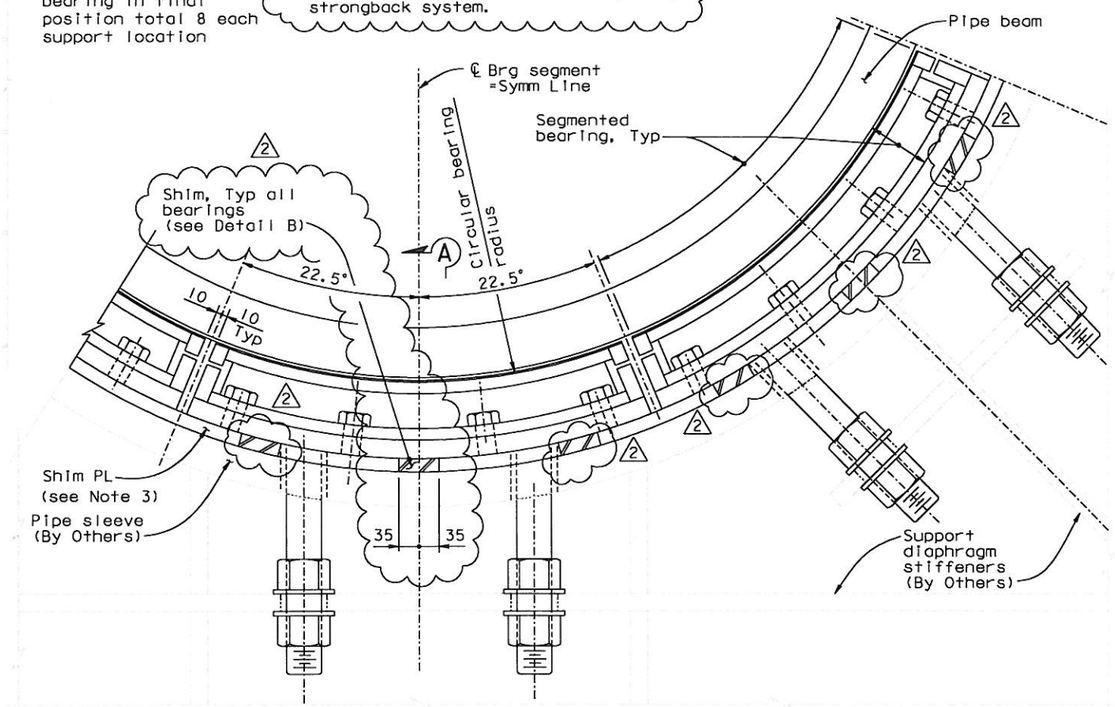

Sliding Brg Type I and II (see Note 2)
(Type IV Similar) 2
DETAIL A
NTS

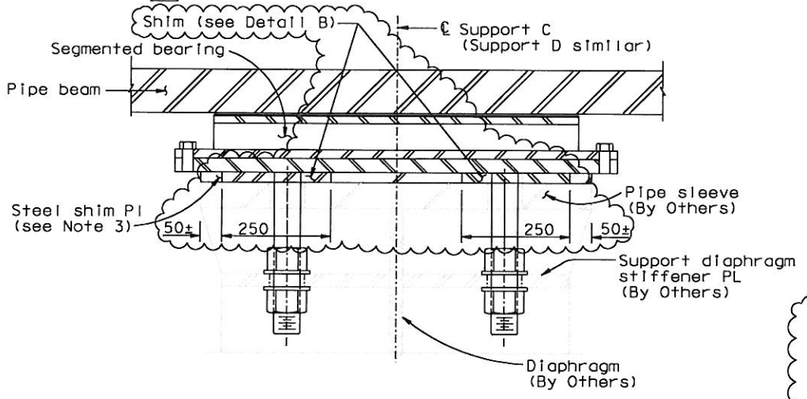

Sliding Brg Type I and II
SECTION A-A
NTS

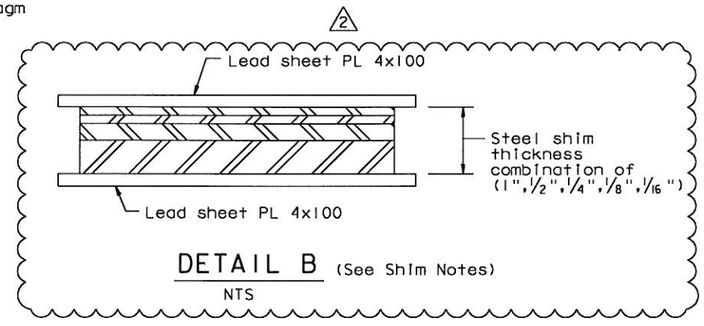

DETAIL B (See Shim Notes)
NTS

NOTES:

1. For locations of BCIW, BCOE, BDIW, BDOE, BCOW, BCIE, BDOW and BDIE, see "Hinge A Geometry Layout" sheets.
2. For sliding bearing Types I and II, see "Hinge A Details No.7" sheet.
3. At the Contractor's option, the shim PL may be replaced with high strength non-shrink grout, subject to review and approval of the Engineer.

CONTRACT CHANGE ORDER NO. 276
SHEET 3 OF 3

REQUESTS FOR INFORMATION NOT ADDRESSED IN THIS CCO REMAIN IN FORCE

ALL DIMENSIONS ARE IN MILLIMETERS UNLESS OTHERWISE SHOWN

R. Vallizadeh/V. Toan/Y.L./W.L./F.C.
DESIGN OVERSIGHT
SIGN OFF DATE 12/06/12

MARK	DATE	DESCRIPTIONS	BY	CH'D	CCO#
2	12/06/12	HINGE A PIPE BEAM SHIMS	NV	MN	276
1	07/30/10	HINGE A MODIFICATIONS	MN	NV	120

REVISIONS

	BY	CHECKED
DESIGN	M. Nader	N. Vo
DETAILS	G. Baker	N. Vo
QUANTITIES	G. Baker	N. Vo

PREPARED FOR THE STATE OF CALIFORNIA DEPARTMENT OF TRANSPORTATION

R. Manzanarez
PROJECT ENGINEER

BRIDGE NO. 34-0006L/R
KILOMETER POST 13.2/13.9

SAN FRANCISCO OAKLAND BAY BRIDGE
EAST SPAN SEISMIC SAFETY PROJECT
SELF-ANCHORED SUSPENSION BRIDGE
(SUPERSTRUCTURE & TOWER)

HINGE A DETAILS NO. 4

Rev. Date: 5-18-98

ORIGINAL SCALE IN MILLIMETERS FOR REDUCED PLANS 0 10 20 30 40 50 60 70 80 90 100

CU 04
EA 0120F1

DISREGARD PRINTS BEARING EARLIER REVISION DATES → REVISION DATES (PRELIMINARY STAGE ONLY) 04/26/12 07/09/12 12/15/12

SHEET 438R2 OF

FILE => I:\bb\04-01200I\sas\contract plans and cco\cco\cco#276\I-original 12-06-12\dgn\ahhng04.dgn

100 % PS&E

DATE PLOTTED => 05 DEC 2012 TIME PLOTTED => 10:31:19

USERNAME => PHUO