DIST.	COUNTY	ROUTE	KILOMETER POST TOTAL PROJECT	SHEET NO.	TOTAL SHEETS
04	SF	80	13.2/13.9	938SIRI	1204

REGISTERED ENGINEER - CIVIL

10-31-08

PLANS APPROVAL DATE

REGISTERED PROFESSIONAL ENGINEER Marwan N. Nader No. C 054426 Exp. 12/31/13 CIVIL STATE OF CALIFORNIA

The State of California or its officers or agents shall not be responsible for the accuracy or completeness of electronic copies of this plan sheet.

T.Y. LIN / MOFFATT & NICHOL
825 BATTERY STREET
SAN FRANCISCO, CA 94111

Caltrans now has a web site! To get to the web site, go to: http://www.dot.ca.gov

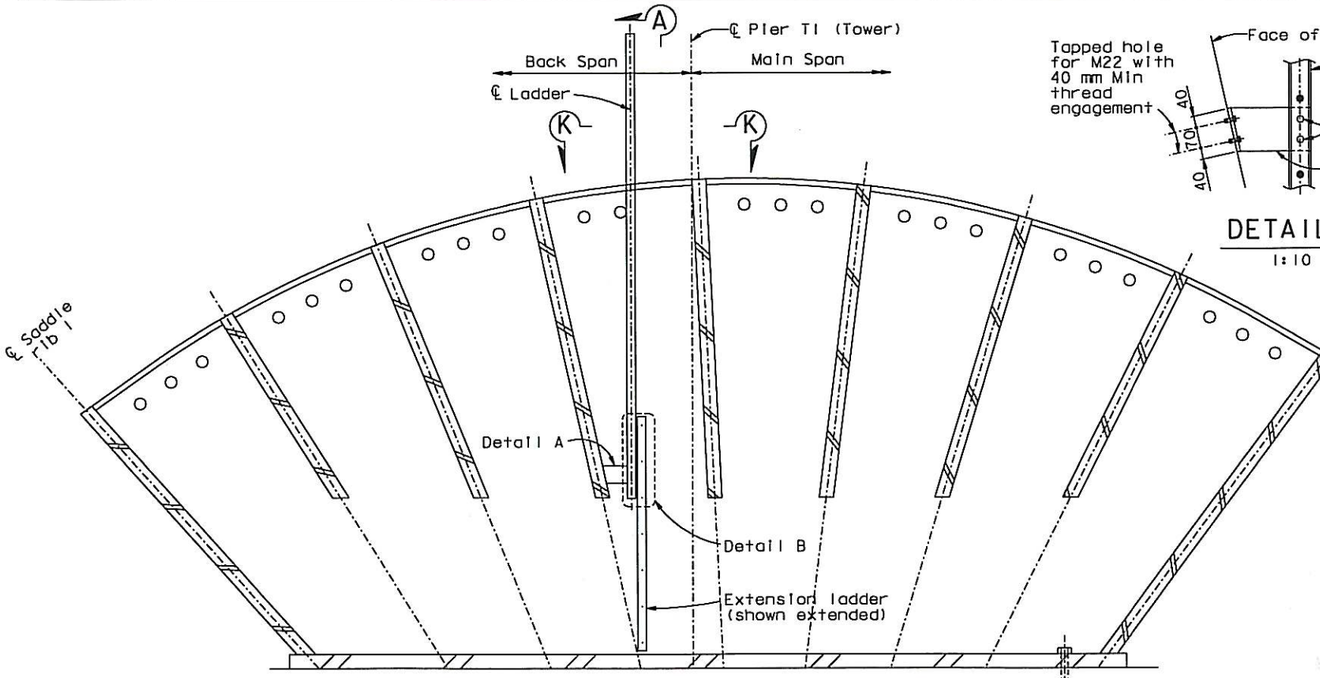

SECTION G-G (See Note 7) ⚠1
1:25

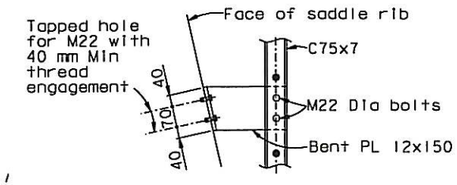

DETAIL A (Ladder Support)
1:10

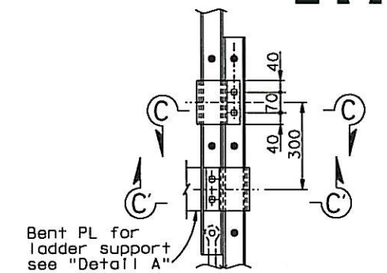

DETAIL B
1:10

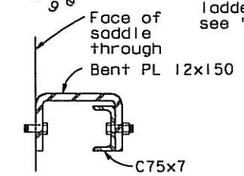

SECTION B-B (Ladder Support) (For details not shown, see Detail A)
1:5

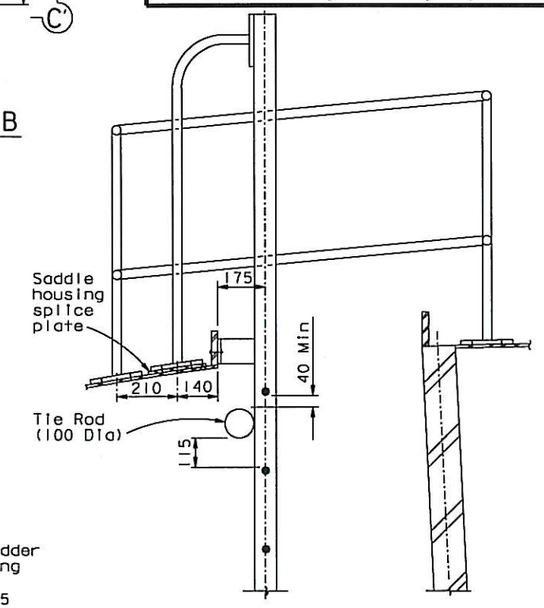

SECTION L-L
1:10

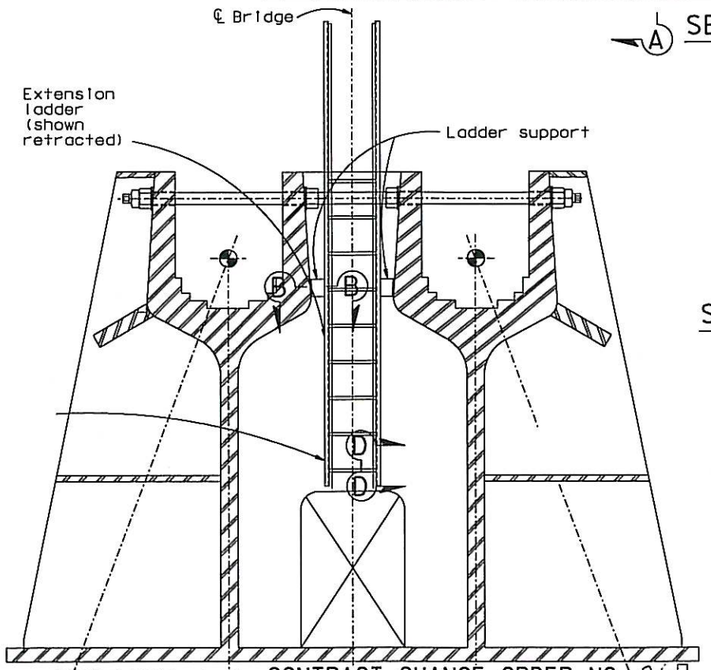

SECTION A-A
1:25

CONTRACT CHANGE ORDER NO. 267
SHEET 2 OF 4

REQUESTS FOR INFORMATION NOT ADDRESSED IN THIS CCO REMAIN IN FORCE

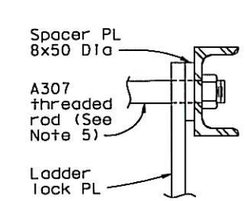

SECTION E-E
1:2.5

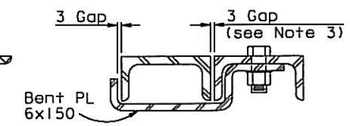

SECTION C-C
1:2.5
Shown, Section C'-C' Similar

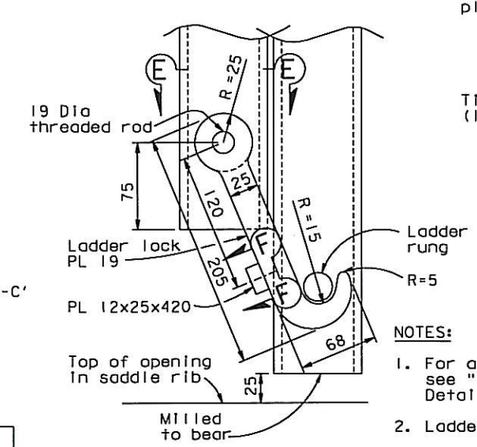

SECTION D-D
1:2.5

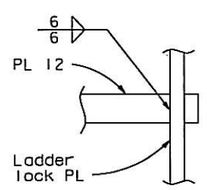

SECTION F-F
1:2.5

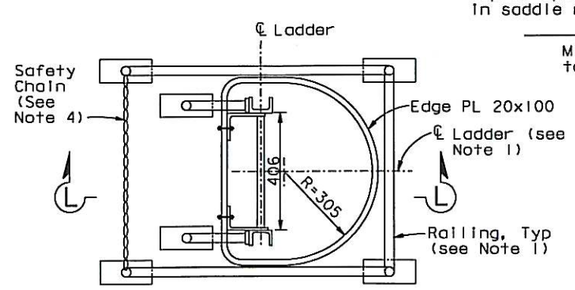

VIEW K-K
1:10

NOTES:

1. For access opening, ladder and railing details, see "Tower Access Details No.7" and "Tower Access Details No.8" sheets.
2. Ladder rails shall be vertical.
3. Elevation ladder shall slide freely without binding.
4. Safety chain shall be galvanized chain with spring clip end fasteners. Chain and fasteners to be rated at 5 kN (1000 lb) breaking load.
5. At the Contractor's option galvanized A709M GR345 T2 may be used for threaded rods and in lieu of A307 bolts, subject to review and approval of the Engineer.
6. At the Contractor's option ladder may be spliced. For ladder splice details, see "Tower Access Details No.7" sheet.
7. ⚠1 At the direction of the Engineer, alternative ladder details may be used. For alternate ladder details, see "Tower Access Details No.34" sheet.

ALL DIMENSIONS ARE IN MILLIMETERS UNLESS OTHERWISE SHOWN

MARK	DATE	DESCRIPTIONS	BY	CH'D	CCO#
1	12/12/12	TOWER STRUT ACCESS	NV	MN	267
0	10/31/08	TOWER HEAD DETAILS	NV	MN	93

REVISIONS

R. Vallizadeh/V. Toan/Y.L./N.L./F.C.
DESIGN OVERSIGHT
SIGN OFF DATE 12/12/12

Rev. Date: 5-18-98

	BY	CHECKED
DESIGN	N. Vo	M. Nader
DETAILS	N. Vo	M. Nader
QUANTITIES	N. Vo	M. Nader

PREPARED FOR THE STATE OF CALIFORNIA DEPARTMENT OF TRANSPORTATION

R. Manzanarez
PROJECT ENGINEER

BRIDGE NO. 34-0006L/R
KILOMETER POST 13.2/13.9

SAN FRANCISCO OAKLAND BAY BRIDGE
EAST SPAN SEISMIC SAFETY PROJECT
SELF-ANCHORED SUSPENSION BRIDGE
(SUPERSTRUCTURE & TOWER)

TOWER ACCESS DETAILS NO. 23

ORIGINAL SCALE IN MILLIMETERS FOR REDUCED PLANS 0 10 20 30 40 50 60 70 80 90 100

CU 04
EA 0120F1

DISREGARD PRINTS BEARING EARLIER REVISION DATES 10/31/08

REVISION DATES (PRELIMINARY STAGE ONLY)

SHEET 521SIRI OF

FILE => I:\bb\04-012001\sas\contract plans and cco\cco\cco#267\1-original 12-12-12\dgn\akacc22a.dgn

USERNAME => DMinrow DATE PLOTTED => 12 DEC 2012 TIME PLOTTED => 14:04:13

100 % PS&E

DIST.	COUNTY	ROUTE	KILOMETER POST TOTAL PROJECT	SHEET NO.	TOTAL SHEETS
04	SF	80	13.2/13.9	938512	1204

REGISTERED ENGINEER - CIVIL

12-12-12
PLANS APPROVAL DATE

Marwan N. Nader
No. C 054426
Exp. 12/31/13
CIVIL
STATE OF CALIFORNIA

The State of California or its officers or agents shall not be responsible for the accuracy or completeness of electronic copies of this plan sheet.

T.Y. LIN / MOFFATT & NICHOL
825 BATTERY STREET
SAN FRANCISCO, CA 94111

Caltrans now has a web site! To get to the web site, go to: http://www.dot.ca.gov

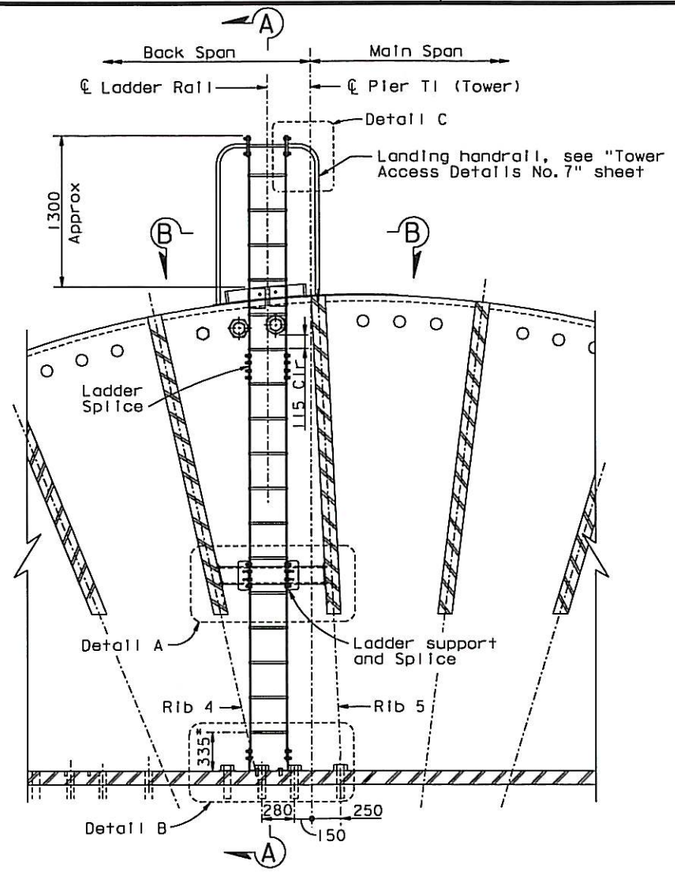

PARTIAL SECTION THRU SADDLE

1:25

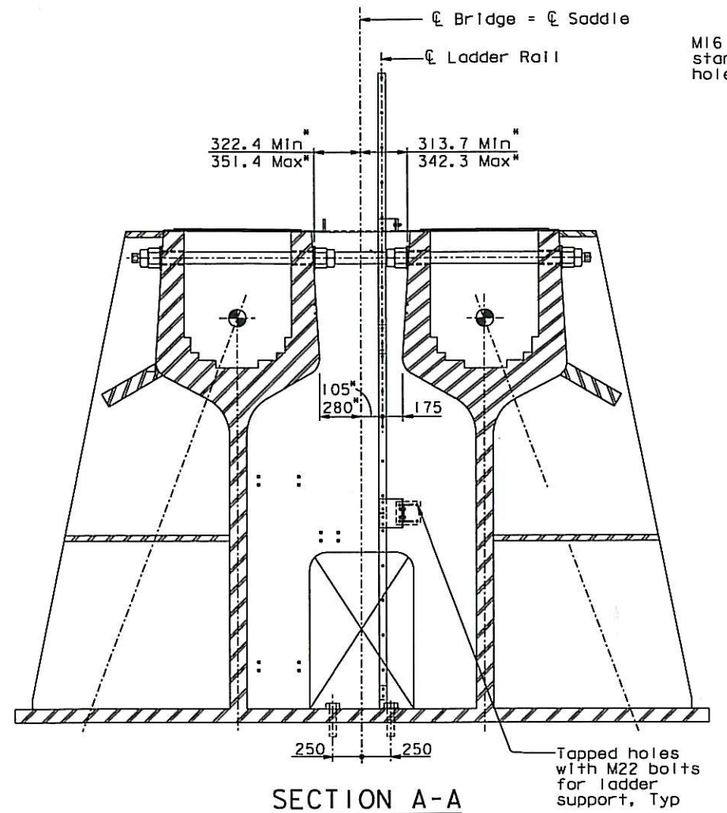

SECTION A-A

1:25

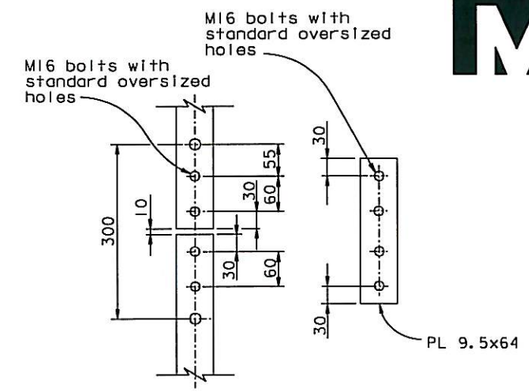

LADDER SPLICE

1:5

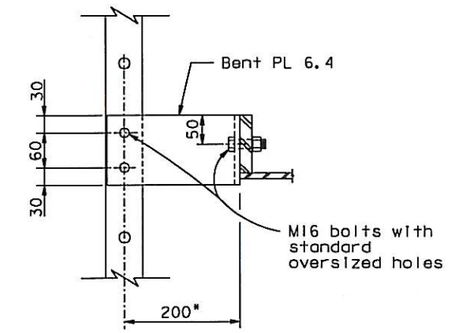

SECTION C-C

1:5

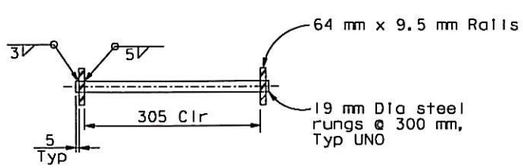

LADDER DETAILS

1:5

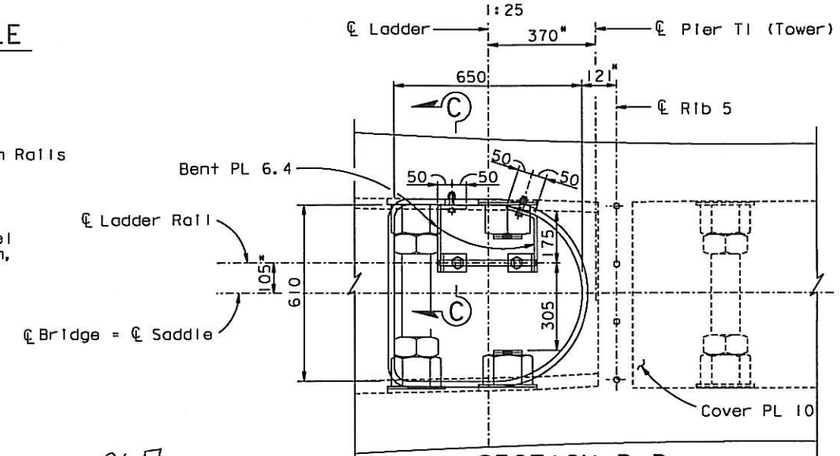

SECTION B-B

1:10

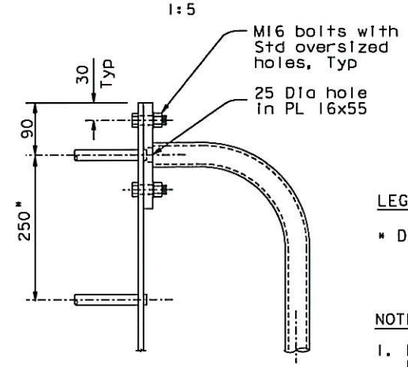

DETAIL C

1:5

LEGEND:

* Dimensions to be field verified.

NOTES:

1. For details A and B, see "Tower Access Details No. 35" sheet.

CONTRACT CHANGE ORDER NO. 267
SHEET 3 OF 4

REQUESTS FOR INFORMATION NOT ADDRESSED IN THIS CCO REMAIN IN FORCE

ALTERNATIVE LADDER DETAILS

ALL DIMENSIONS ARE IN MILLIMETERS UNLESS OTHERWISE SHOWN

R. Valizadeh/V. Toan/Y. L./W. L./F. C.
DESIGN OVERSIGHT
SIGN OFF DATE 12/12/12

MARK	DATE	DESCRIPTIONS	BY	CH'D	CCO#
0	12/12/12	TOWER STRUT ACCESS	NV	MN	267

REVISIONS

DESIGN	BY N. Vo	CHECKED	M. Nader
DETAILS	BY N. Vo	CHECKED	M. Nader
QUANTITIES	BY N. Vo	CHECKED	M. Nader

PREPARED FOR THE STATE OF CALIFORNIA DEPARTMENT OF TRANSPORTATION

M. Nader
PROJECT ENGINEER

BRIDGE NO. 34-0006L/R
KILOMETER POST 13.2/13.9

SAN FRANCISCO OAKLAND BAY BRIDGE
EAST SPAN SEISMIC SAFETY PROJECT
SELF-ANCHORED SUSPENSION BRIDGE
(SUPERSTRUCTURE & TOWER)

TOWER ACCESS DETAILS NO. 34

Rev. Date: 5-18-98

ORIGINAL SCALE IN MILLIMETERS FOR REDUCED PLANS 0 10 20 30 40 50 60 70 80 90 100

CU 04
EA 0120F1

DISREGARD PRINTS BEARING EARLIER REVISION DATES 12/12/12

REVISION DATES (PRELIMINARY STAGE ONLY)

SHEET 521512 OF

FILE => I:\bb\04-012001\sas\contract plans and cco\cco\cco#267\1-original 12-12-12\dgn\akacc22n.dgn

100 % PS&E

USERNAME => DMIrow DATE PLOTTED => 12 DEC 2012 TIME PLOTTED => 14:06:20

DIST.	COUNTY	ROUTE	KILOMETER POST TOTAL PROJECT	SHEET NO.	TOTAL SHEETS
04	SF	80	13.2/13.9	938513	1204

REGISTERED ENGINEER - CIVIL

12-12-12
PLANS APPROVAL DATE

REGISTERED PROFESSIONAL ENGINEER Marwan N. Nader No. C 054426 Exp. 12/31/13 CIVIL STATE OF CALIFORNIA

The State of California or its officers or agents shall not be responsible for the accuracy or completeness of electronic copies of this plan sheet.

T.Y. LIN / MOFFATT & NICHOL
825 BATTERY STREET
SAN FRANCISCO, CA 94111

Caltrans now has a web site! To get to the web site, go to: http://www.dot.ca.gov

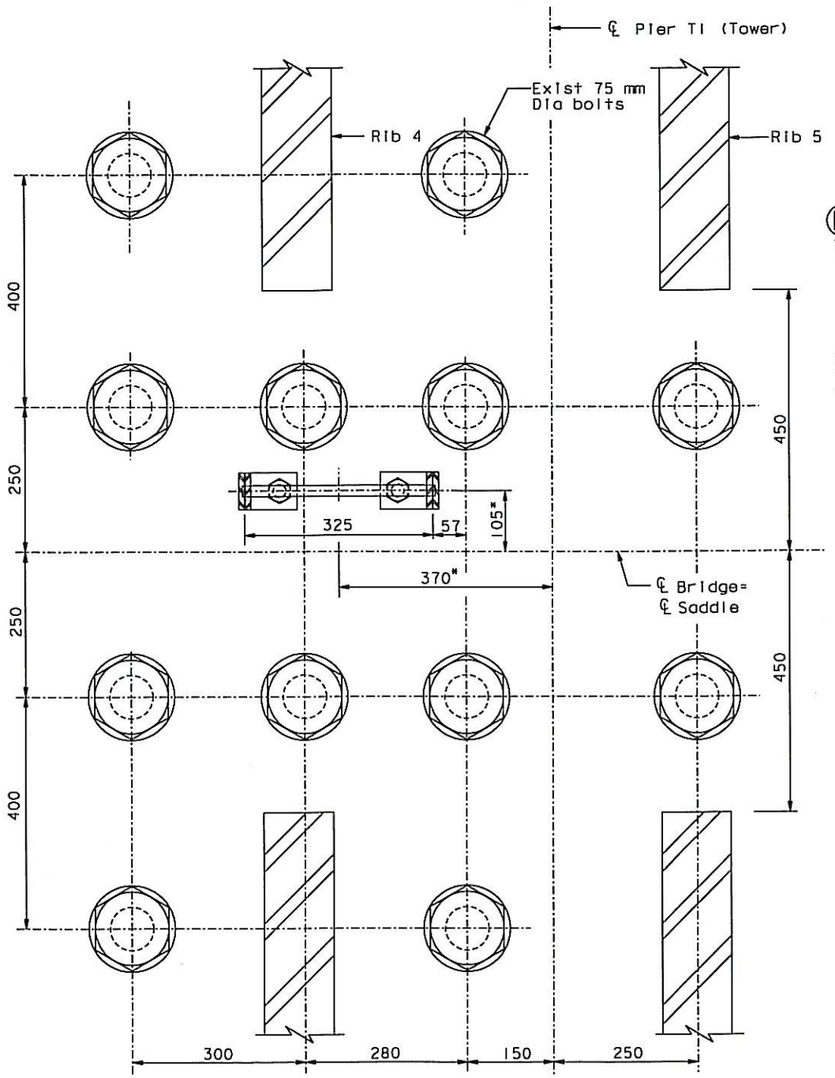

SECTION S-S
1:5

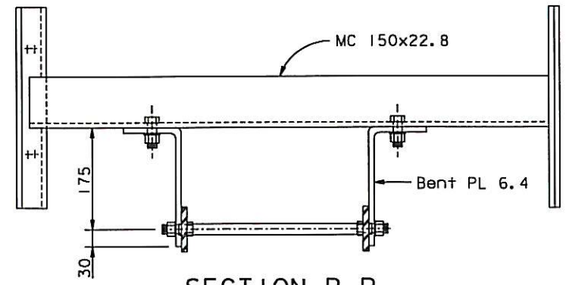

SECTION P-P
1:5

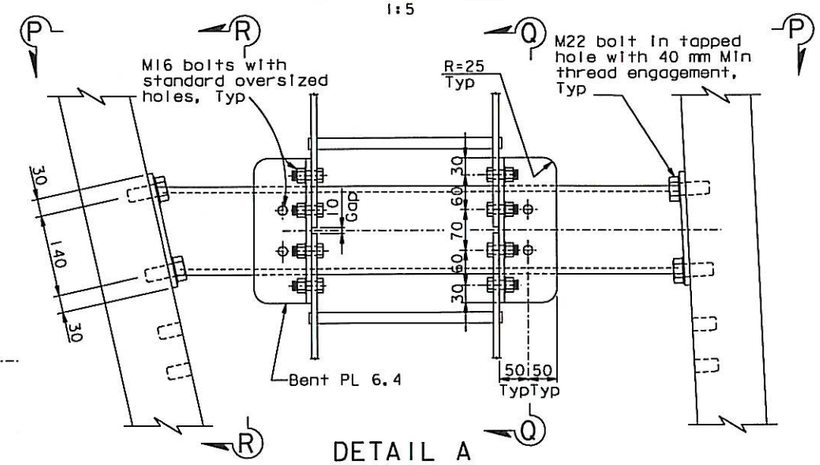

DETAIL A
1:5

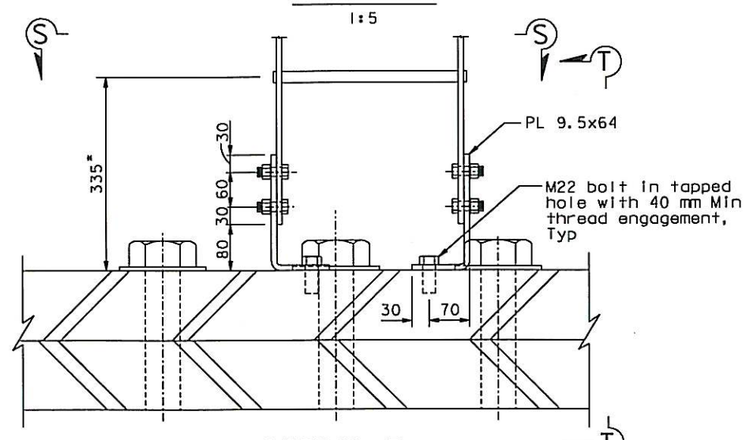

DETAIL B
1:5

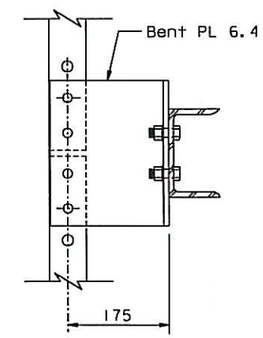

SECTION Q-Q
1:5

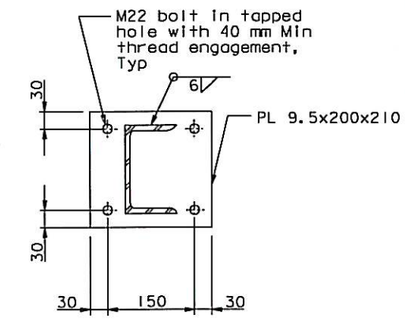

SECTION R-R
1:5

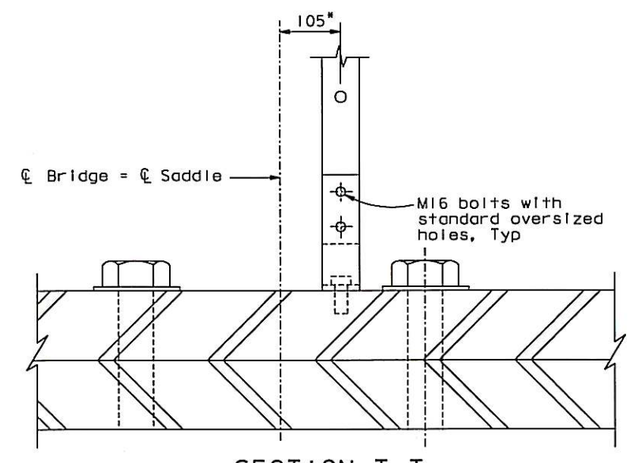

SECTION T-T
1:5

LEGEND:
* Dimension to be field verified.

CONTRACT CHANGE ORDER NO. 267
SHEET 4 OF 4

REQUESTS FOR INFORMATION NOT ADDRESSED IN THIS CCO REMAIN IN FORCE

ALTERNATIVE LADDER DETAILS

ALL DIMENSIONS ARE IN MILLIMETERS UNLESS OTHERWISE SHOWN

MARK	DATE	DESCRIPTIONS	BY	CH'D	CCO#
0	12/12/12	TOWER STRUT ACCESS	NV	MN	267

REVISIONS

R. Valizadeh/V. Toon/Y.L./W.L./F.C.
DESIGN OVERSIGHT
SIGN OFF DATE 12/12/12

	BY	CHECKED
DESIGN	N. Vo	M. Nader
DETAILS	N. Vo	M. Nader
QUANTITIES	N. Vo	M. Nader

PREPARED FOR THE STATE OF CALIFORNIA DEPARTMENT OF TRANSPORTATION

M. Nader
PROJECT ENGINEER

BRIDGE NO. 34-0006L/R
KILOMETER POST 13.2/13.9

SAN FRANCISCO OAKLAND BAY BRIDGE
EAST SPAN SEISMIC SAFETY PROJECT
SELF-ANCHORED SUSPENSION BRIDGE
(SUPERSTRUCTURE & TOWER)

TOWER ACCES DETAILS NO. 35

Rev. Date: 5-18-98

ORIGINAL SCALE IN MILLIMETERS FOR REDUCED PLANS 0 10 20 30 40 50 60 70 80 90 100

CU 04
EA 0120F1

DISREGARD PRINTS BEARING EARLIER REVISION DATES 12/12/12

REVISION DATES (PRELIMINARY STAGE ONLY)

SHEET 521S13 OF

FILE => I:\bb\04-0120F1\sas\contract plans and cco\cco\cco#267\1-original 12-12-12\dgn\akacc22p.dgn

100 % PS&E

USERNAME => DWinrow DATE PLOTTED => 12 DEC 2012 TIME PLOTTED => 14:07:38