DIST.	COUNTY	ROUTE	KILOMETER POST TOTAL PROJECT	SHEET NO.	TOTAL SHEETS
04	SF	80	13.2/13.9	792S1	1204

REGISTERED ENGINEER - CIVIL

01-28-13

PLANS APPROVAL DATE

REGISTERED PROFESSIONAL ENGINEER Marwan N. Nader No. C 054426 Exp. 12/31/13 CIVIL STATE OF CALIFORNIA

The State of California or its officers or agents shall not be responsible for the accuracy or completeness of electronic copies of this plan sheet.

T.Y. LIN / MOFFATT & NICHOL
825 BATTERY STREET
SAN FRANCISCO, CA 94111

Caltrans now has a web site! To get to the web site, go to: http://www.dot.ca.gov

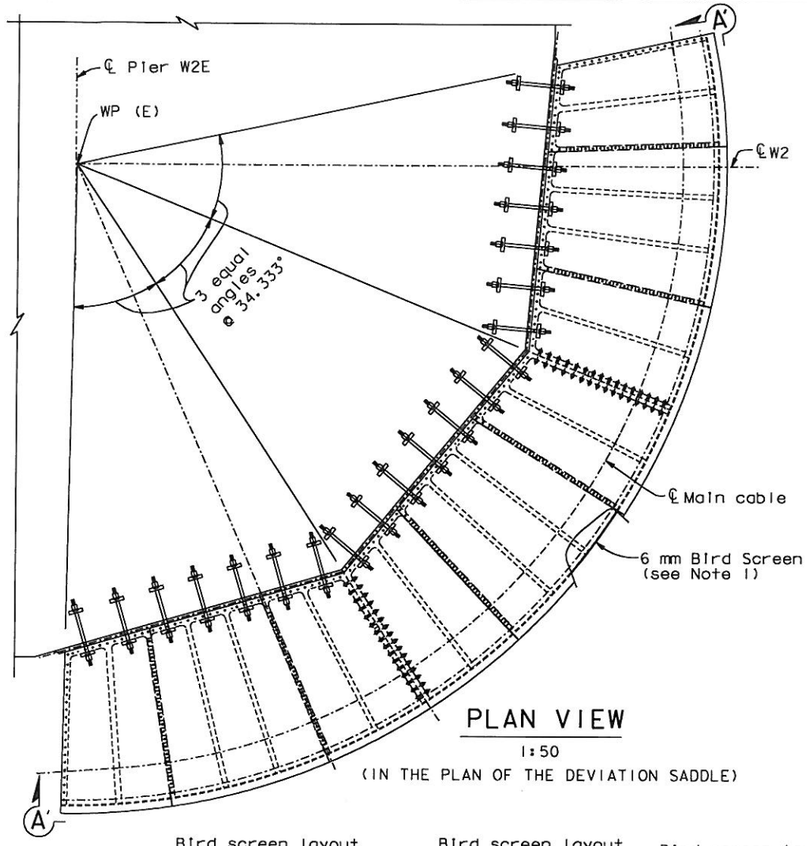

PLAN VIEW
1:50
(IN THE PLAN OF THE DEVIATION SADDLE)

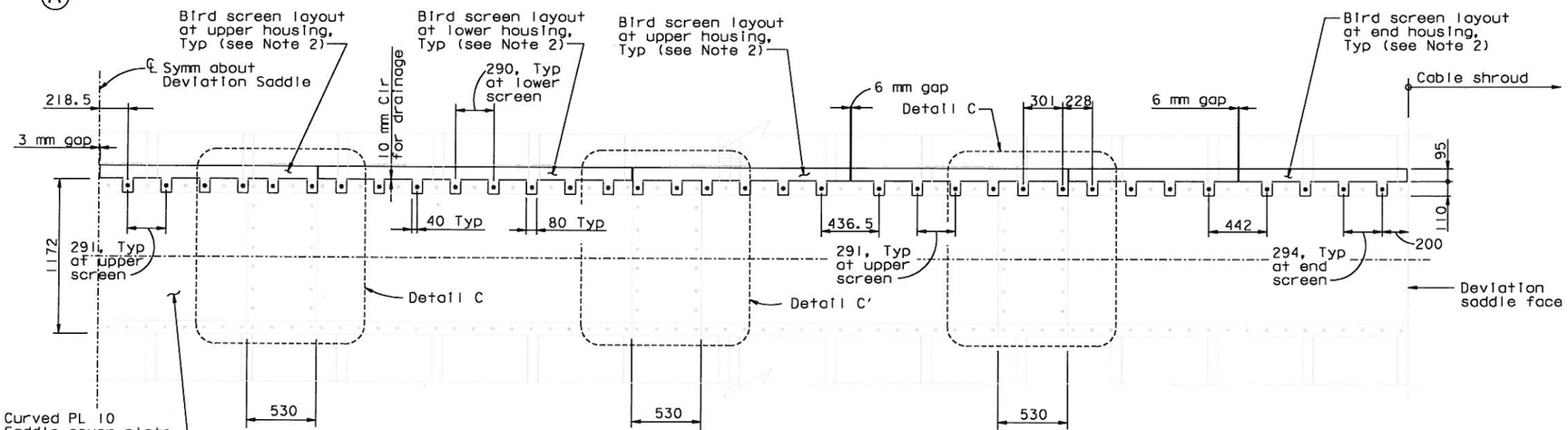

SECTION A'-A'
1:20

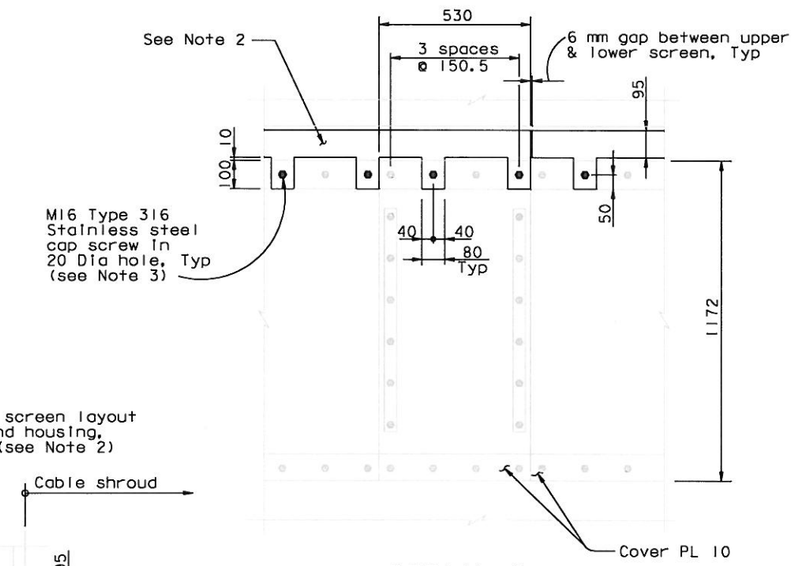

DETAIL C (Detail C' opposite hand)
1:10

NOTES:

1. The bird screen shall be ASTM A36 and painted. The plate shall be bolted to the trough housing plates as detailed. The Contractor shall provide new M16 cap screws to secure the bird screen.
2. Plate lengths and dimensions shall be field verified prior to fabrication.
3. The holes in 6 mm plates shall be standard oversize to allow fit-up. The Contractor shall use oversized washers.
4. At the Contractor's option, 0-6 mm radius may be provided at corners of the bird screen.

CONTRACT CHANGE ORDER NO. 258
SHEET 2 OF 3

REQUESTS FOR INFORMATION NOT ADDRESSED IN THIS CCO REMAIN IN FORCE

ALL DIMENSIONS ARE IN MILLIMETERS UNLESS OTHERWISE SHOWN

R. Vallzadeh/V. Toan/Y. L./W. L./F. C.
DESIGN OVERSIGHT
SIGN OFF DATE 01-28-13

MARK	DATE	DESCRIPTIONS	BY	CH'D	CCO#
0	01/28/13	BIRD BARRIER AT WEST SADDLES	GB	MN	258

REVISIONS

DESIGN	BY G. Baker	CHECKED	M. Nader
DETAILS	BY G. Baker	CHECKED	M. Nader
QUANTITIES	BY G. Baker	CHECKED	M. Nader

PREPARED FOR THE STATE OF CALIFORNIA DEPARTMENT OF TRANSPORTATION

M. Nader
PROJECT ENGINEER

BRIDGE NO. 34-0006L/R
KILOMETER POST 13.2/13.9

SAN FRANCISCO OAKLAND BAY BRIDGE
EAST SPAN SEISMIC SAFETY PROJECT
SELF-ANCHORED SUSPENSION BRIDGE
(SUPERSTRUCTURE & TOWER)

WEST DEVIATION SADDLE BIRD SCREEN DETAILS NO. 1

Rev. Date: 5-18-98

ORIGINAL SCALE IN MILLIMETERS FOR REDUCED PLANS 0 10 20 30 40 50 60 70 80 90 100

CU 04
EA 0120F1

DISREGARD PRINTS BEARING EARLIER REVISION DATES → 01/28/13

REVISION DATES (PRELIMINARY STAGE ONLY)

SHEET 375S1 OF

FILE => I:\bb\04-0120F1\sas\contract plans and cco\cco\cco#258\4-update 01-28-13\agshd02b.dgn

100 % PS&E

USERNAME => ALisnansk DATE PLOTTED => 28 JAN 2013 TIME PLOTTED => 13:57:00

DIST.	COUNTY	ROUTE	KILOMETER POST TOTAL PROJECT	SHEET NO.	TOTAL SHEETS
04	SF	80	13.2/13.9	793S1	1204

REGISTERED ENGINEER - CIVIL

01-28-13
PLANS APPROVAL DATE

REGISTERED PROFESSIONAL ENGINEER Marwan N. Nader No. C 054426 Exp. 12/31/13 CIVIL STATE OF CALIFORNIA

The State of California or its officers or agents shall not be responsible for the accuracy or completeness of electronic copies of this plan sheet.

T.Y. LIN / MOFFATT & NICHOL
825 BATTERY STREET
SAN FRANCISCO, CA 94111

Caltrans now has a web site! To get to the web site, go to: http://www.dot.ca.gov

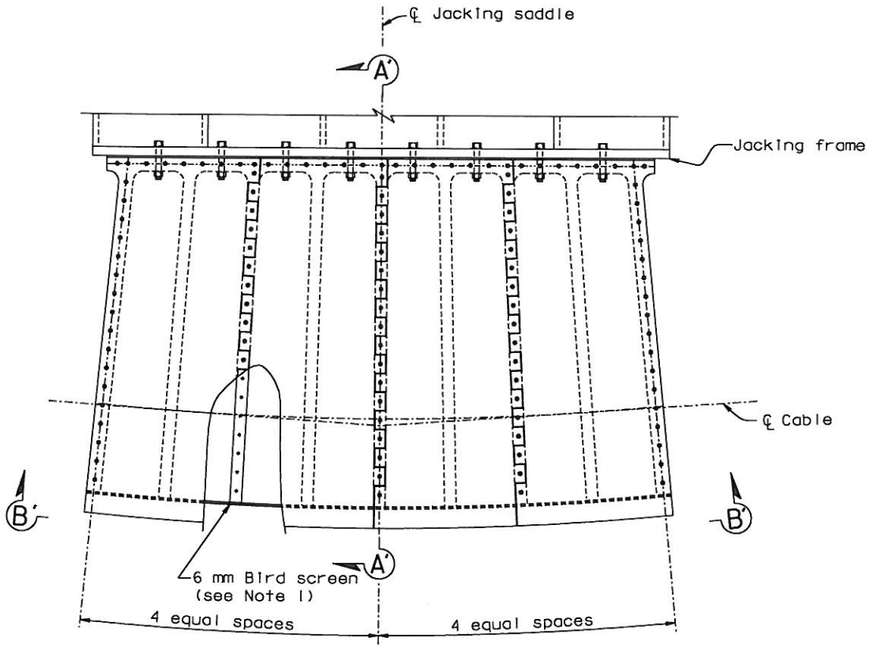

PLAN VIEW
1:20
(IN THE PLAN OF THE JACKING SADDLE)

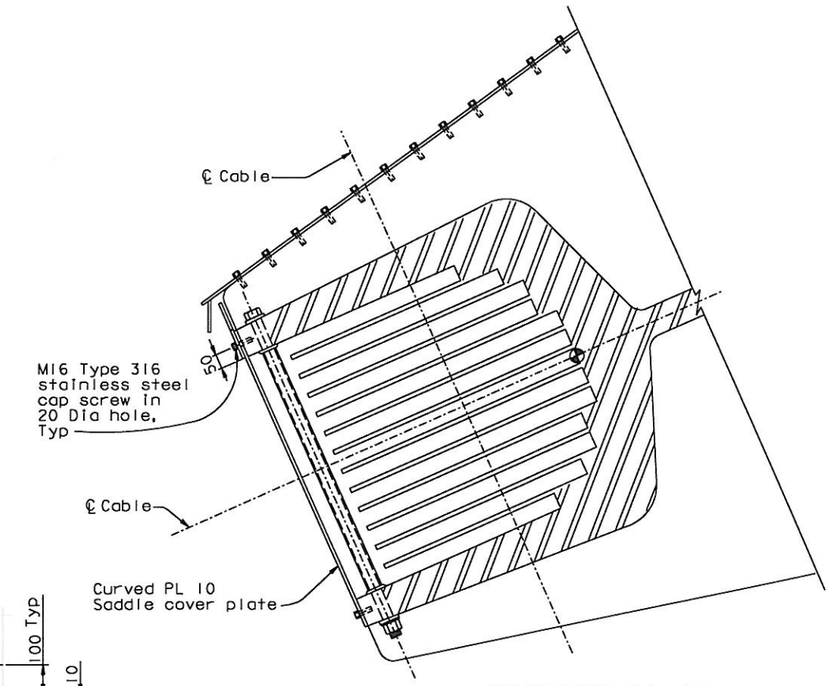

SECTION A'-A'
1:10

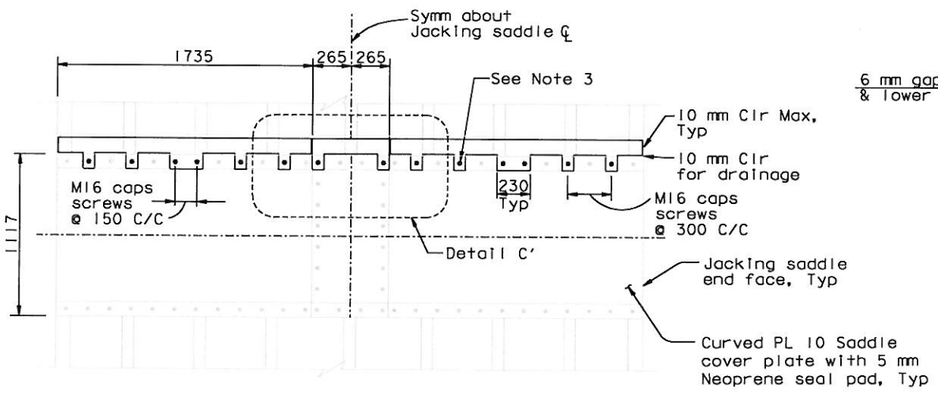

ELEVATION B'-B'
1:20

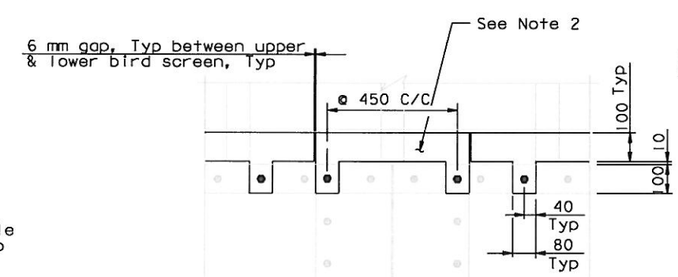

DETAIL C'
1:10

NOTES:

1. The bird screen shall be ASTM A36 steel and painted. The plate shall be bolted to the trough housing plates as detailed. The Contractor shall provide new M16 cap screws to secure the bird screen.
2. Plate lengths and dimensions shall be field verified prior to fabrication.
3. The holes in 6 mm plates shall be standard oversize to allow fit-up. The Contractor shall use oversized washers.
4. At the Contractor's option, 0-6 mm radius may be provided at the corners of the bird screen.

CONTRACT CHANGE ORDER NO. 258
SHEET 3 OF 3

REQUESTS FOR INFORMATION NOT ADDRESSED IN THIS CCO REMAIN IN FORCE

ALL DIMENSIONS ARE IN MILLIMETERS UNLESS OTHERWISE SHOWN

MARK	DATE	DESCRIPTIONS	BY	CH'D	CCO#
0	01/28/13	BIRD BARRIER AT WEST SADDLES	GB	MN	258

REVISIONS

R. Valizadeh/V. Toan/Y.L./W.L./F.C.
DESIGN OVERSIGHT
SIGN OFF DATE 01/28/13

	BY	CHECKED
DESIGN	G. Baker	M. Nader
DETAILS	G. Baker	M. Nader
QUANTITIES	G. Baker	M. Nader

PREPARED FOR THE STATE OF CALIFORNIA DEPARTMENT OF TRANSPORTATION

M. Nader
PROJECT ENGINEER

BRIDGE NO. 34-0006L/R
KILOMETER POST 13.2/13.9

SAN FRANCISCO OAKLAND BAY BRIDGE
EAST SPAN SEISMIC SAFETY PROJECT
SELF-ANCHORED SUSPENSION BRIDGE
(SUPERSTRUCTURE & TOWER)

WEST JACKING SADDLE BIRD SCREEN DETAILS NO. 1

Rev. Date: 5-18-98

ORIGINAL SCALE IN MILLIMETERS FOR REDUCED PLANS 0 10 20 30 40 50 60 70 80 90 100

CU 04
EA 0120F1

DISREGARD PRINTS BEARING EARLIER REVISION DATES

REVISION DATES (PRELIMINARY STAGE ONLY) 01/28/13

SHEET 376S1 OF

100 % PS&E

USERNAME => ALtsnansk DATE PLOTTED => 28 JAN 2013 TIME PLOTTED => 14:06:38

FILE => I:\bb\04-0120F1\sas\contract plans and cco\cco\cco#258\4-update 01-28-13\agshd02c.dgn