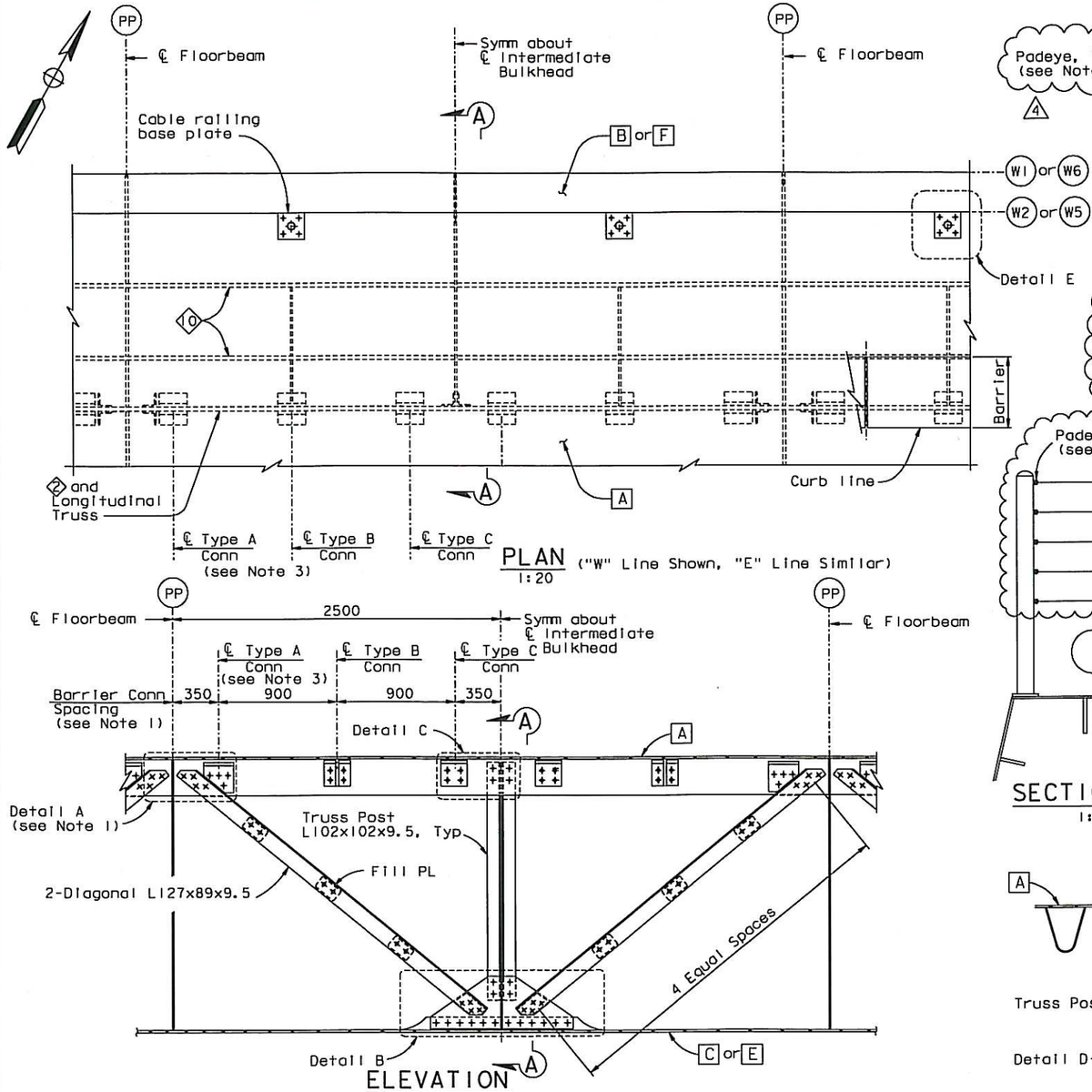

PLAN ("W" Line Shown, "E" Line Similar)
1:20

ELEVATION
LONGITUDINAL TRUSS ("W" Line Shown, "E" Line Similar)
1:20

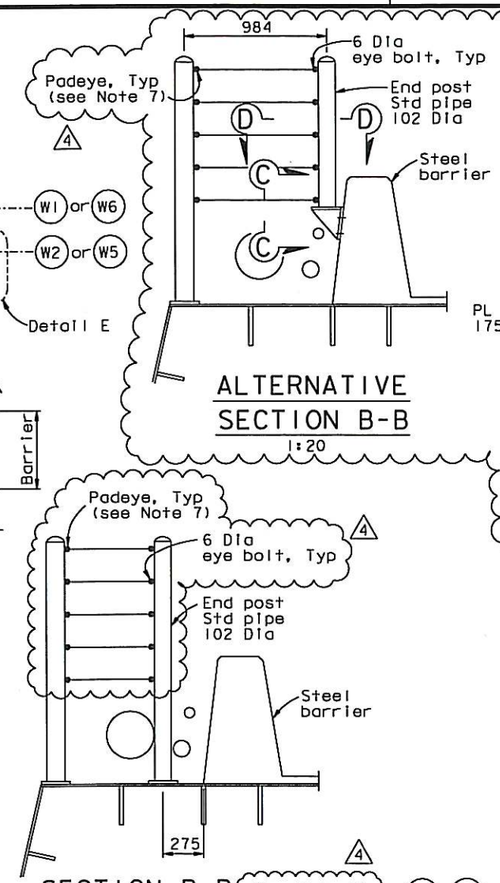

ALTERNATIVE
SECTION B-B
1:20

SECTION B-B (See Note 8)
1:20

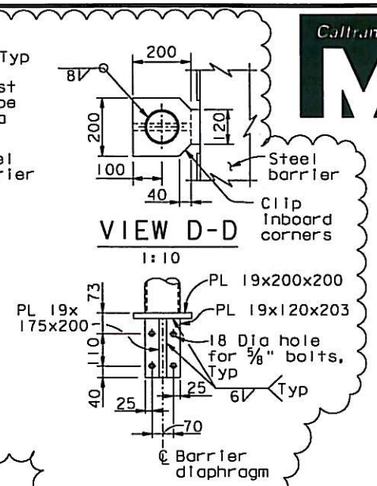

VIEW D-D
1:10

VIEW C-C
1:10

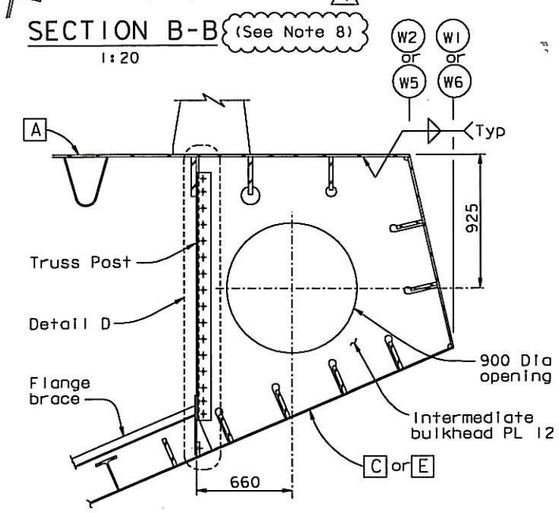

SECTION A-A
1:20

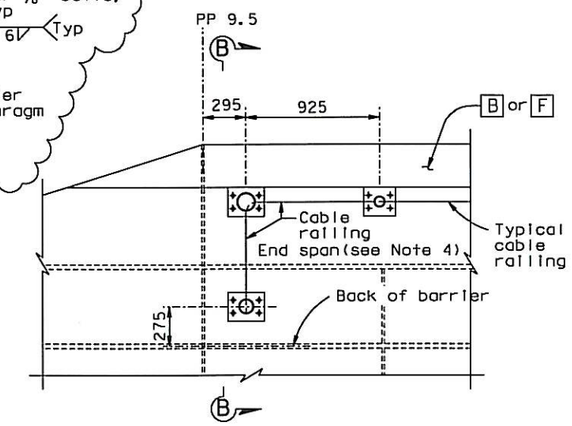

PLAN OF CABLE RAILING TERMINATION
1:20
(PP 9.5 shown, PP127 similar, PP40&44 W5 Line similar, "W" Line shown, "E" Line similar)

NOTES:

1. For barrier connection details, see "Typical Girder Details No. 14" sheet.
2. For Details A, B, C, and D, see "Typical Girder Details No. 13" sheet.
3. For locations without a longitudinal truss, barrier connection Type C shall be used in lieu of connection Type A.
4. For details not shown, see "Typical Girder Details No. 17A, 17B and 17C" sheets.
5. For Detail E, see "Typical Girder Details No. 12A" sheet.
6. At the Contractor's option, a 8 mm fillet weld around the perimeter of the PL 20 may be used in lieu of 4 M20 bolts, subject to review and approval of the Engineer.
7. Padeyes shall be Crosby size 1-1/2 or equivalent. (4)
8. At the Contractor's option, Alternative Section B-B may be used.

ALL DIMENSIONS ARE IN MILLIMETERS UNLESS OTHERWISE SHOWN

Caltrans Metric

DIST.	COUNTY	ROUTE	KILOMETER POST TOTAL PROJECT	SHEET NO.	TOTAL SHEETS
04	SF	80	13.2/13.9	636R4	1204

George Baker
REGISTERED ENGINEER - CIVIL
12-6-04
PLANS APPROVAL DATE

REGISTERED PROFESSIONAL ENGINEER George S. Baker No. C57112 Exp. 12/31/05 CIVIL STATE OF CALIFORNIA

The State of California or its officers or agents shall not be responsible for the accuracy or completeness of electronic copies of this plan sheet.

T.Y. LIN / MOFFATT & NICHOL
825 BATTERY STREET
SAN FRANCISCO, CA 94111

Caltrans now has a web site! To get to the web site, go to: http://www.dot.ca.gov

Daniel J. Turner
REGISTERED PROFESSIONAL ENGINEER Daniel J. Turner No. C 65033 Exp. 06/30/13 CIVIL STATE OF CALIFORNIA
FOR REVISIONS ONLY

CONTRACT CHANGE ORDER NO. 257
SHEET 3 OF 4

REQUESTS FOR INFORMATION NOT ADDRESSED IN THIS CCO REMAIN IN FORCE

MARK	DATE	DESCRIPTIONS	BY	CH'D	CCO#
4	04/17/13	CABLE RAILING INSTALL	AB	DT	257
3	11/16/11	CABLE RAILING	GB	DT	188
2	05/15/09	HANDRAIL	GB	DT	114
1	08/24/07	BARRIER MODIFICATIONS	GB	DT	44

REVISIONS

R. Valizadeh/V. Toan/Y. L./W. L./F. C.
DESIGN OVERSIGHT
Roya Valizadeh / Vang Toan / Y. Liu
SIGN OFF DATE 04/17/13

DESIGN	BY G. Baker	CHECKED P. Ritchie	
DETAILS	BY C. Mauch	CHECKED T. McMeans	
QUANTITIES	BY G. Baker	CHECKED M. Roberts	

PREPARED FOR THE STATE OF CALIFORNIA DEPARTMENT OF TRANSPORTATION

R. Manzanarez
PROJECT ENGINEER

BRIDGE NO. 34-0006L/R
KILOMETER POST 13.2/13.9

SAN FRANCISCO OAKLAND BAY BRIDGE
EAST SPAN SEISMIC SAFETY PROJECT
SELF-ANCHORED SUSPENSION BRIDGE
(SUPERSTRUCTURE & TOWER)

TYPICAL GIRDER DETAILS NO. 12

Rev. Date: 5-18-98

ORIGINAL SCALE IN MILLIMETERS FOR REDUCED PLANS 0 10 20 30 40 50 60 70 80 90 100

CU 04
EA 0120F1

DISREGARD PRINTS BEARING EARLIER REVISION DATES

REVISION DATES (PRELIMINARY STAGE ONLY) 05/25/99 08/02/99 05/31/01 01/30/02 07/09/02 12/13/02

SHEET 219R4 OF

FILE => I:\bb\04-0120I\sas\contract plans and cco\cco\cco#257\I-original 04-17-13\dgn\ggdkd06b.dgn

100% PS&E

USERNAME => crivera DATE PLOTTED => 17 APR 2013 TIME PLOTTED => 13:59:16

DIST.	COUNTY	ROUTE	KILOMETER POST TOTAL PROJECT	SHEET NO.	TOTAL SHEETS
04	SF	80	13.2/13.9	641SIR2	1204

REGISTERED ENGINEER - CIVIL

05-15-09
PLANS APPROVAL DATE

REGISTERED PROFESSIONAL ENGINEER Tien Hung Ho No. C 43990 Exp. 06/30/09 CIVIL STATE OF CALIFORNIA

The State of California or its officers or agents shall not be responsible for the accuracy or completeness of electronic copies of this plan sheet.

T.Y. LIN / MOFFATT & NICHOL
825 BATTERY STREET
SAN FRANCISCO, CA 94111

Caltrans now has a web site! To get to the web site, go to: http://www.dot.ca.gov

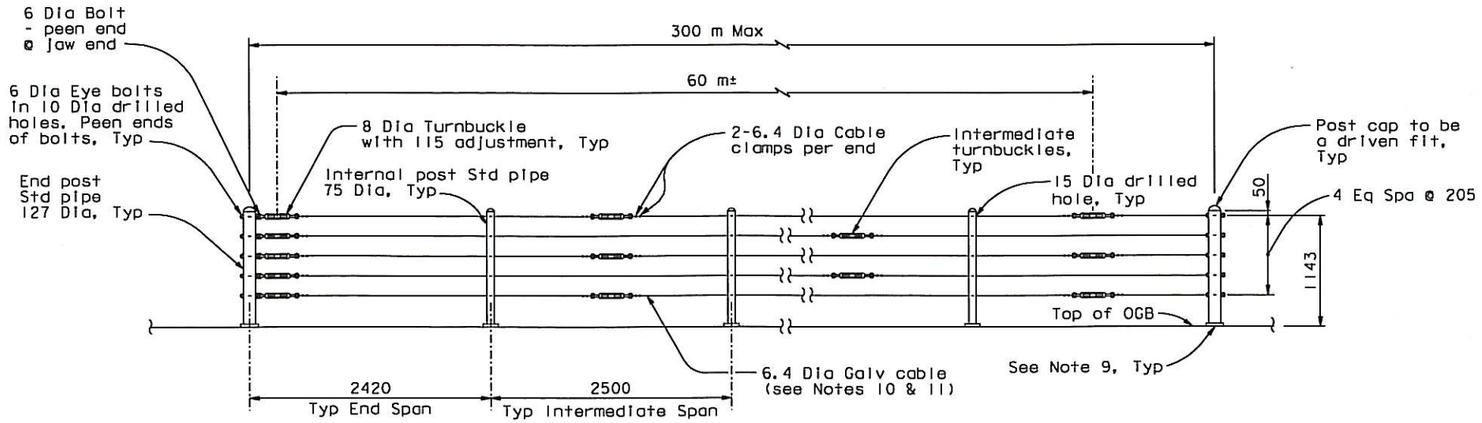

ELEVATION - TYPICAL

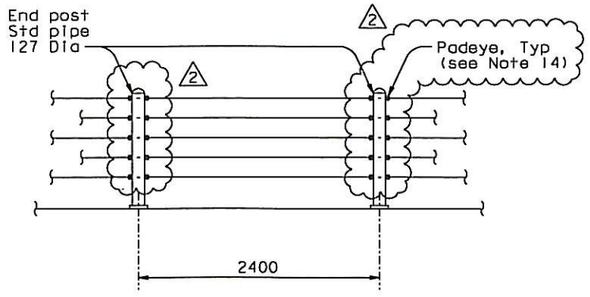

MID-SPAN CABLE BRACING DETAIL

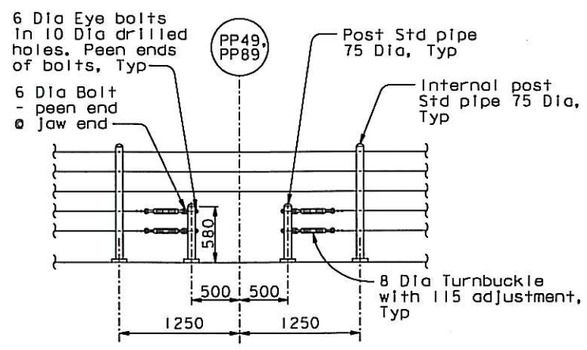

ELEVATION AT UTILITY EXPANSION LOOPS - W2 LINE

CABLE RAILING - W2 LINE (E2 Similar) (See Note 12)

1:30

NOTES:

1. Maximum distance between turnbuckles shall be 60 m ±.
2. Intermediate turnbuckles to be placed in adjacent spans.
3. Cable shall not be spliced between intermediate turnbuckles and end posts.
4. All posts, cable and hardware to be galvanized.
5. Posts to be vertical in the transverse direction and normal to the deck in the longitudinal direction.
6. Alternative details may be submitted by the Contractor for approval by the Engineer.
7. Typical end spans, braced in both directions, shall be constructed at changes in line where the angle of deflection is 15° or more.
8. Provide thimbles at all cable loops.
9. For post base details, see "Typical Girder Details No. 12A" sheet.
10. The bottom cable shall terminate at the vertical posts on either side of the utility pipe expansion loops on the E2 Line.
11. At the Engineer's direction, plastic-coated galvanized cable shall be used.
12. Post spacings are for information only and shall be consistent with existing holes in the deck plates.
13. A plastic boot or tape of the heat-shrink type shall be applied to the cable where it connects with fittings. The boot or tape shall extend over the fitting at least 25 mm.
14. Padeyes shall be Crosby 1-1/2 or equivalent. (2)

100 % PS&E

USERNAME => arivera DATE PLOTTED => 17 APR 2013 TIME PLOTTED => 11:09:53

REGISTERED PROFESSIONAL ENGINEER Daniel J. Turner No. C 65033 Exp. 06/30/13 CIVIL STATE OF CALIFORNIA

FOR REVISIONS ONLY

CONTRACT CHANGE ORDER NO. 257
SHEET 4 OF 4

REQUESTS FOR INFORMATION NOT ADDRESSED IN THIS CCO REMAIN IN FORCE

MARK	DATE	DESCRIPTIONS	BY	CH'D	CCO#
2	04/17/13	CABLE RAILING INSTALL	AB	DT	257
1	05/11/12	CABLE RAILING	DT	HT	188
0	05/15/09	HANDRAIL	GB	TH	114

REVISIONS

R. Vallizadeh/V. Toan/Y. L./W. L./F. C.
DESIGN OVERSIGHT
SIGN OFF DATE 04/17/13

Rev. Date: 5-18-98

	BY	CHECKED
DESIGN	G. Baker	T. Ho
DETAILS	G. Baker	T. Ho
QUANTITIES	G. Baker	T. Ho

PREPARED FOR THE STATE OF CALIFORNIA DEPARTMENT OF TRANSPORTATION

ORIGINAL SCALE IN MILLIMETERS FOR REDUCED PLANS 0 10 20 30 40 50 60 70 80 90 100

ALL DIMENSIONS ARE IN MILLIMETERS UNLESS OTHERWISE SHOWN

R. Manzanarez
PROJECT ENGINEER

CU 04
EA 0120F1

BRIDGE NO. 34-0006L/R
KILOMETER POST 13.2/13.9

SAN FRANCISCO OAKLAND BAY BRIDGE
EAST SPAN SEISMIC SAFETY PROJECT
SELF-ANCHORED SUSPENSION BRIDGE
(SUPERSTRUCTURE & TOWER)

TYPICAL GIRDER DETAILS NO. 17A

DISREGARD PRINTS BEARING EARLIER REVISION DATES 05/15/09

REVISION DATES (PRELIMINARY STAGE ONLY)

SHEET 224SIR2 OF

FILE => I:\bb\04-012001\sas\contract plans and cco\cco\cco#257\1-original 04-17-13\dgn\agdkd06a.dgn