DIST.	COUNTY	ROUTE	KILOMETER POST TOTAL PROJECT	SHEET NO.	TOTAL SHEETS
04	SF	80	13.2/13.9	542R3	1204

REGISTERED ENGINEER - CIVIL

12-6-04
PLANS APPROVAL DATE

REGISTERED PROFESSIONAL ENGINEER Marwan N. Nader No. C 054426 Exp. 12/31/13 CIVIL STATE OF CALIFORNIA

The State of California or its officers or agents shall not be responsible for the accuracy or completeness of electronic copies of this plan sheet.

T.Y. LIN / MOFFATT & NICHOL
825 BATTERY STREET
SAN FRANCISCO, CA 94111

Caltrans now has a web site! To get to the web site, go to: http://www.dot.ca.gov

Caltrans Metric

TABLE 1

Optional Tower Bolted Splice Locations	
Splice	Elevation (m)
1	50.300
2	83.000
3	114.000
4	146.280

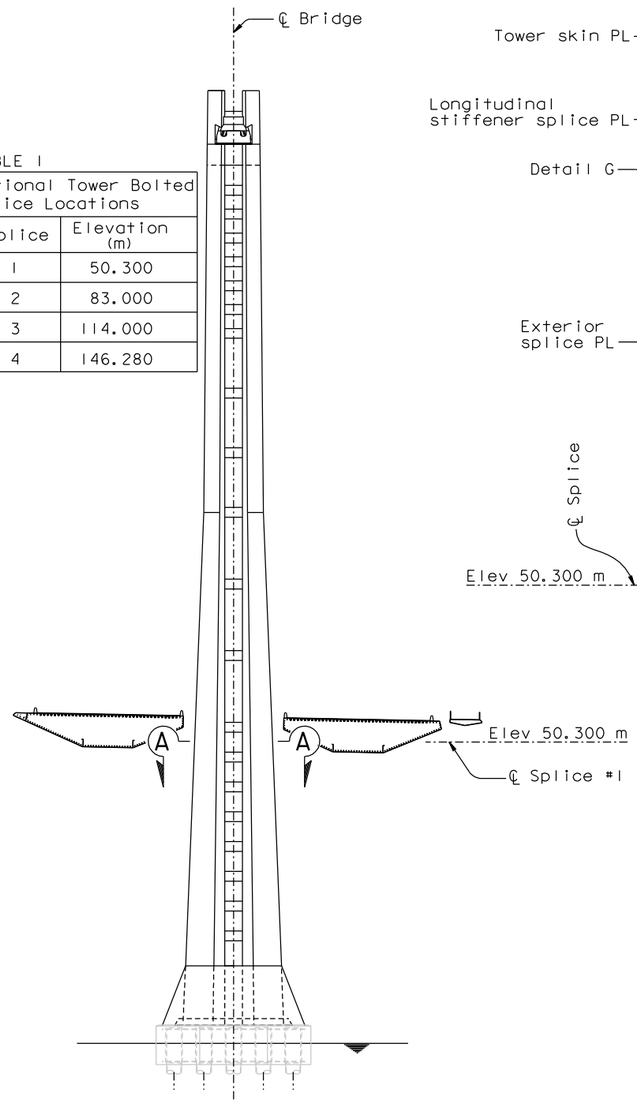

TOWER SPLICE LOCATION
1:500

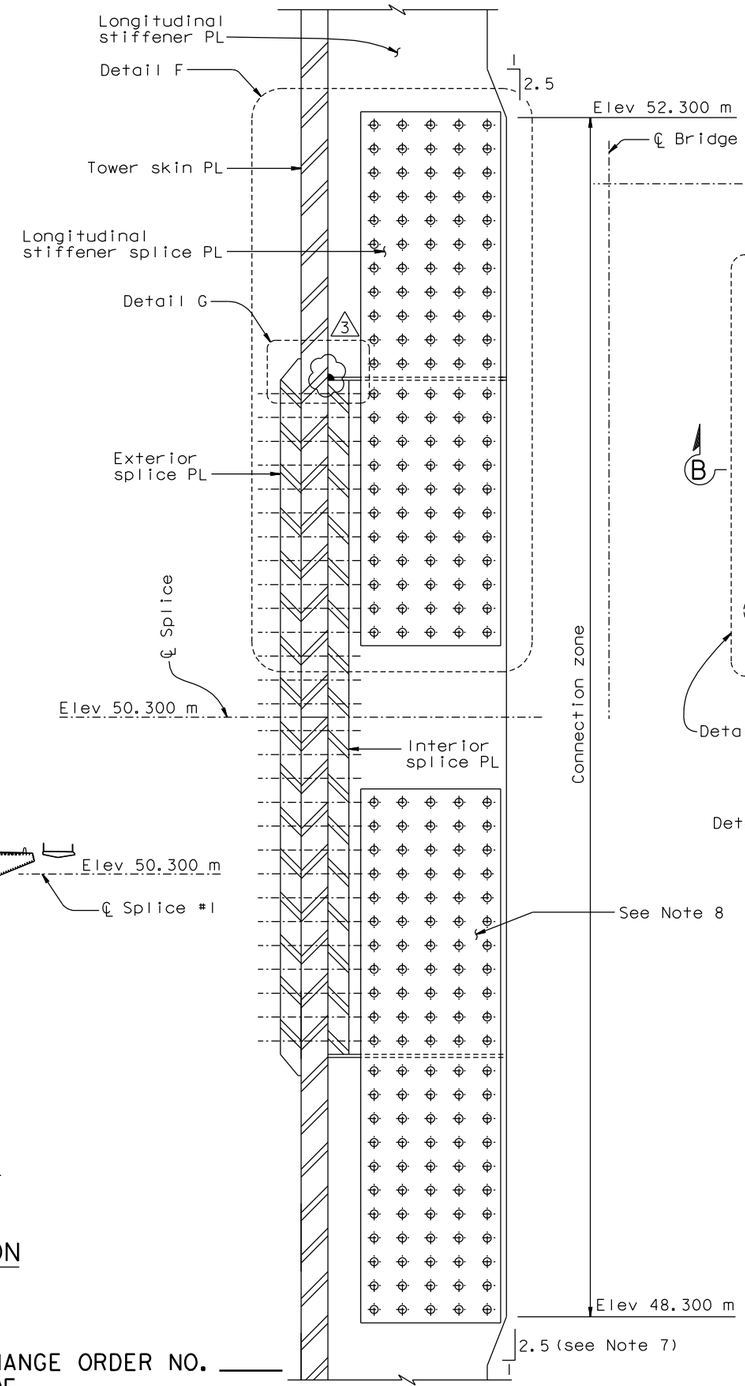

SECTION B-B
1:10

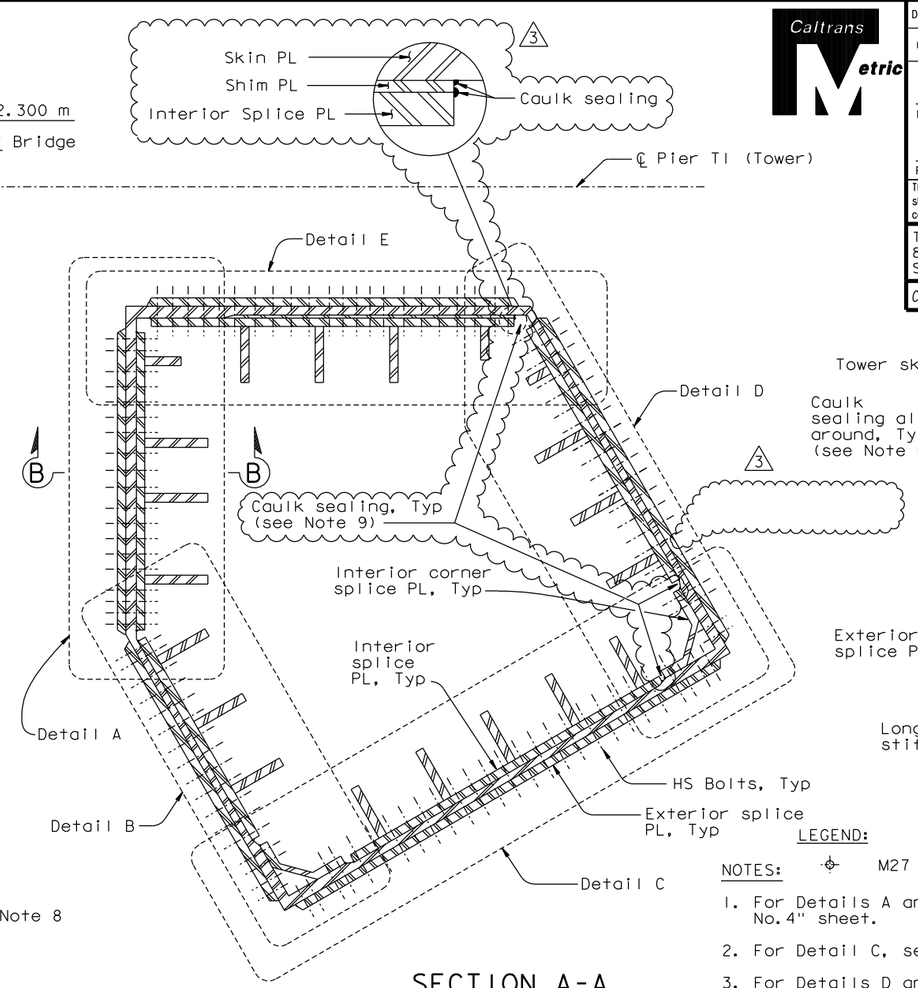

SECTION A-A
1:25

TYPICAL TOWER SHAFT SPLICE #1

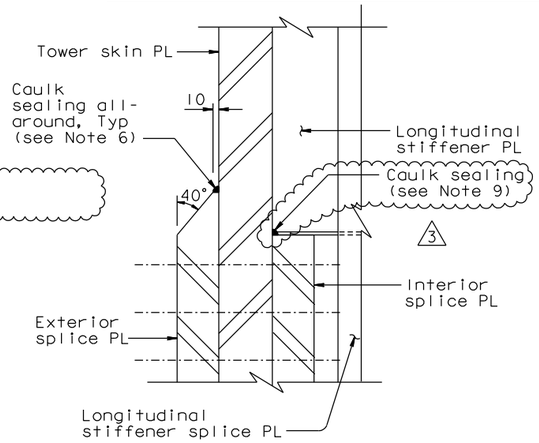

DETAIL G
1:5

LEGEND:

⊕ M27 A490-X HS Bolt

NOTES:

1. For Details A and B, see "Tower Splice Details No.4" sheet.
2. For Detail C, see "Tower Splice Details No.5" sheet.
3. For Details D and E, see "Tower Splice Details No. 6" sheet.
4. For Detail F, see "Tower Splice Details No.7" sheet.
5. The tower splice connections are designed as slip critical connections with class B contact surface (slip coefficient 0.5). The Contractor shall ensure that the flatness requirements are met at the faying surfaces.
6. Caulk sealing shall be applied around the perimeter (horizontal and vertical edges) of all exterior splice plates.
7. Stiffeners A1, E7, and D4 shall not be tapered.
8. For stiffeners A1, B4, E4, E7, and D4, see "Tower Splice Details No.7" sheet.
9. (3) Caulk sealing shall be applied along the exposed upper horizontal edge and exposed vertical edges of all interior splice plates, interior corner splice plates, and shim plates. For upper horizontal edges, caulk sealing shall be continuous through the longitudinal stiffener plates by filling the gap between longitudinal stiffener plates and interior splice plates.

CONTRACT CHANGE ORDER NO. ____
SHEET ____ OF ____

REQUESTS FOR INFORMATION NOT ADDRESSED IN THIS CCO REMAIN IN FORCE

ALL DIMENSIONS ARE IN MILLIMETERS UNLESS OTHERWISE SHOWN

MARK	DATE	DESCRIPTIONS	BY	CH'D	CCO#
3	08/10/12	TOWER CAULKING	NV	MN	256
2	07/07/08	CAULKING	MN	NV	66
1	06/23/06	SPLICE PLATES PER ISM	MN	NV	21

REVISIONS

R. Valizadeh/V. Toan/Y.L./W.L./F.C.
DESIGN OVERSIGHT
SIGN OFF DATE 08/10/12

	BY	CHECKED
DESIGN	M. Nader	M. Gulyas
DETAILS	J. Lopez	N. Vo
QUANTITIES	L. Rus	Y. Zhang

PREPARED FOR THE STATE OF CALIFORNIA DEPARTMENT OF TRANSPORTATION

R. Manzanarez
PROJECT ENGINEER

BRIDGE NO. 34-0006L/R
KILOMETER POST 13.2/13.9

SAN FRANCISCO OAKLAND BAY BRIDGE
EAST SPAN SEISMIC SAFETY PROJECT
SELF-ANCHORED SUSPENSION BRIDGE
(SUPERSTRUCTURE & TOWER)

TOWER SPLICE DETAILS NO. 3

Rev. Date: 5-18-98

ORIGINAL SCALE IN MILLIMETERS FOR REDUCED PLANS 0 10 20 30 40 50 60 70 80 90 100

CU 04
EA 0120F1

DISREGARD PRINTS BEARING EARLIER REVISION DATES

REVISION DATES (PRELIMINARY STAGE ONLY): 05/17/01 04/08/02 07/01/02 12/19/02 10/13/05 11/13/05 12/07/05

SHEET 125R3 OF

FILE => I:\bb\04-012001\sas\contract plans and cco\cco\cco#256\1-original 08-10-12\dgn\aetsp03.dgn

USERNAME => DWinrow DATE PLOTTED => 10 AUG 2012 TIME PLOTTED => 14:16:01

100% PS&E

DIST.	COUNTY	ROUTE	KILOMETER POST TOTAL PROJECT	SHEET NO.	TOTAL SHEETS
04	SF	80	13.2/13.9	547R3	1204

REGISTERED ENGINEER - CIVIL

12-6-04
PLANS APPROVAL DATE

REGISTERED PROFESSIONAL ENGINEER Marwan N. Nader No. C 054426 Exp. 12/31/13 CIVIL STATE OF CALIFORNIA

The State of California or its officers or agents shall not be responsible for the accuracy or completeness of electronic copies of this plan sheet.

T.Y. LIN / MOFFATT & NICHOL
825 BATTERY STREET
SAN FRANCISCO, CA 94111

Caltrans now has a web site! To get to the web site, go to: http://www.dot.ca.gov

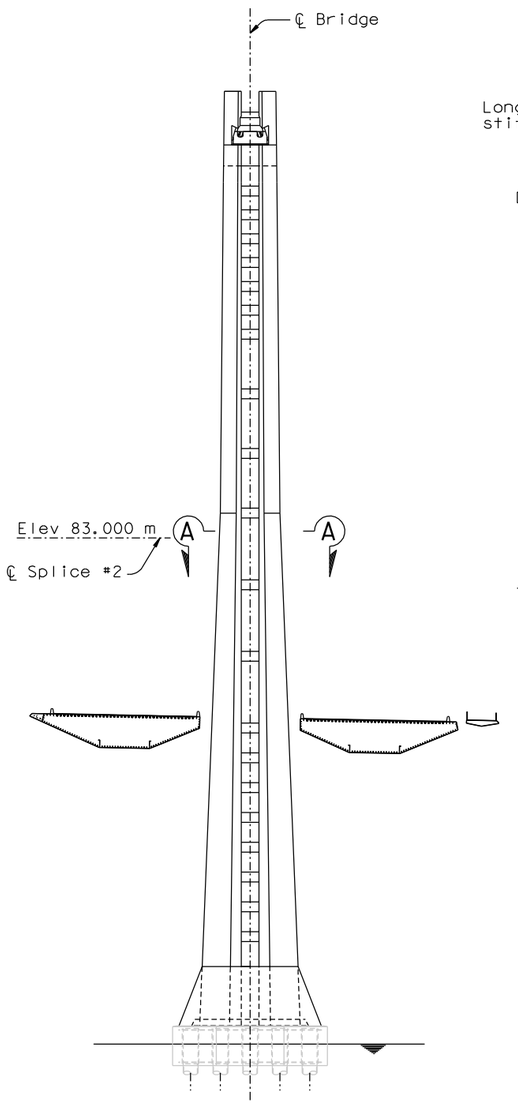

TOWER SPLICE LOCATION
1:500

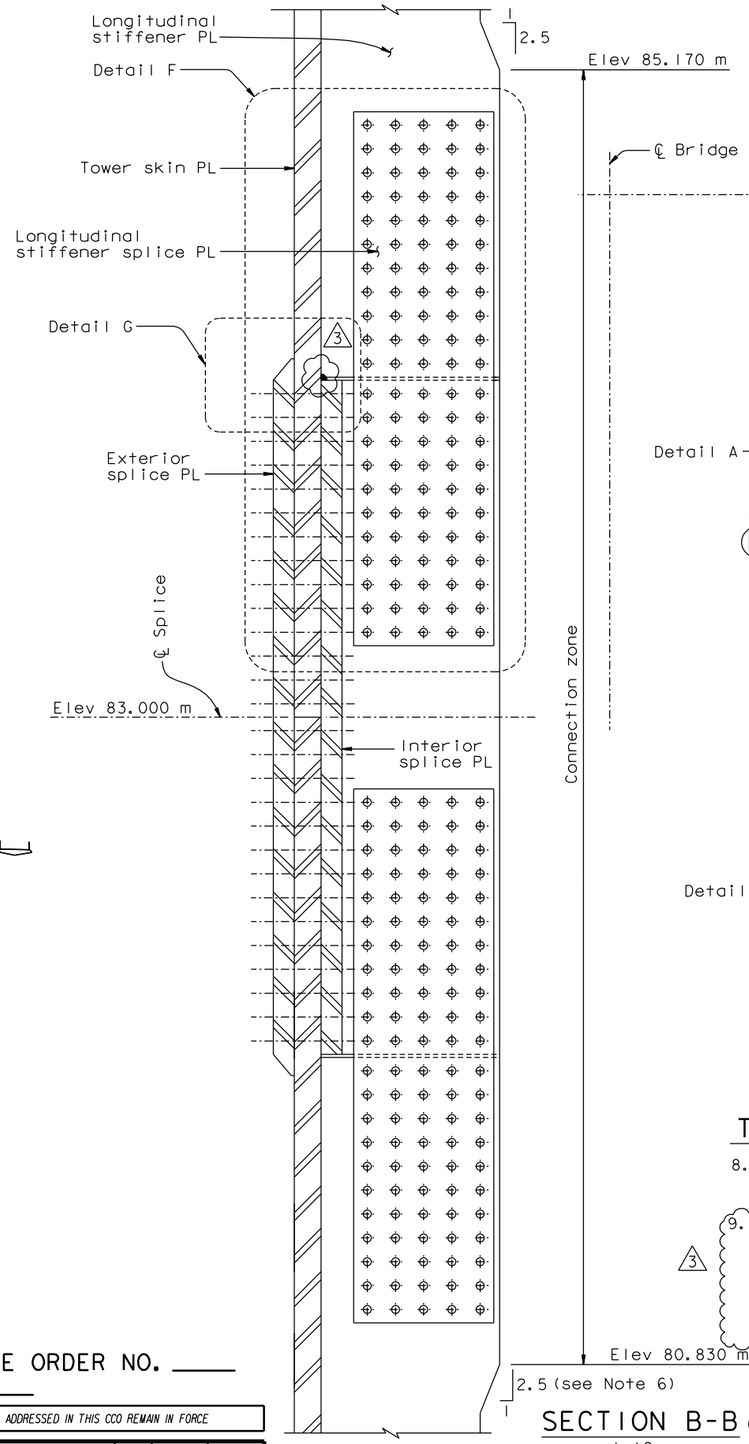

SECTION B-B (see Notes 6 and 7)
1:10

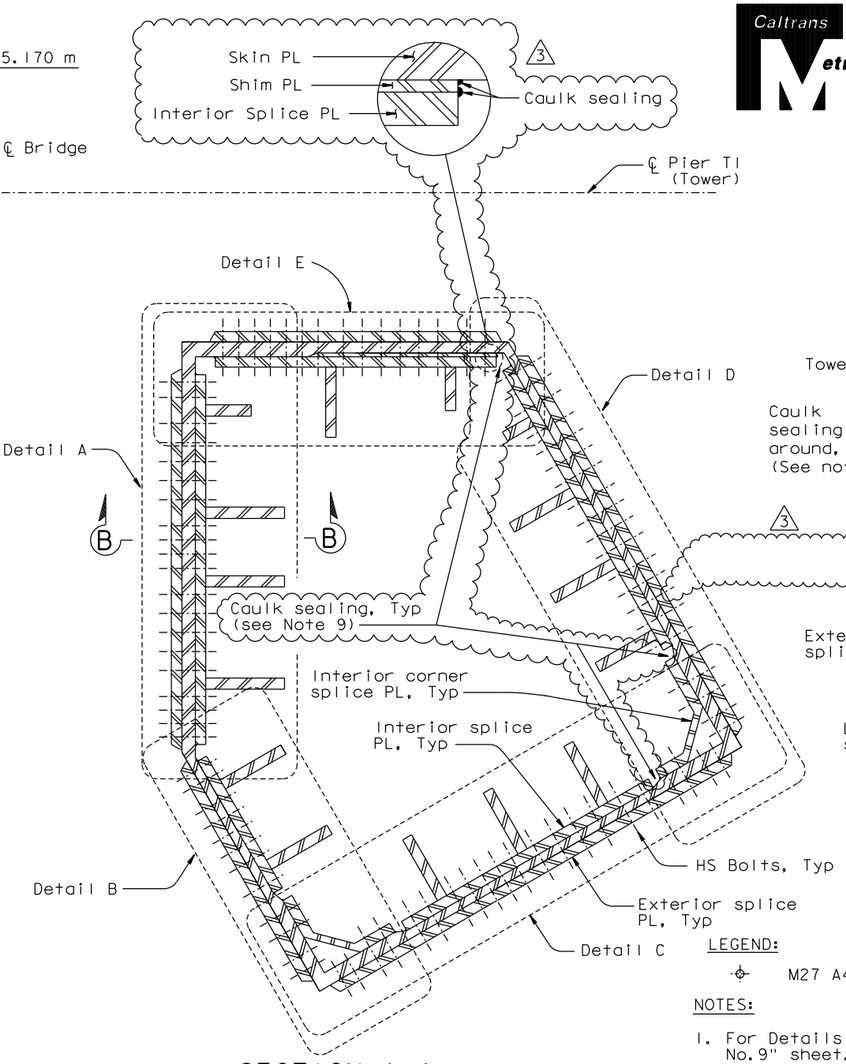

SECTION A-A
1:20

TYPICAL TOWER SHAFT SPLICE #2

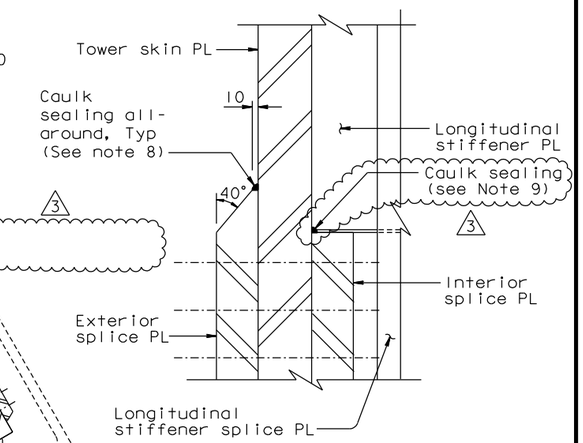

DETAIL G
1:5

LEGEND:

M27 A490-X HS Bolt

NOTES:

1. For Details A and B, see "Tower Splice Details No.9" sheet.
2. For Detail C, see "Tower Splice Details No.10" sheet.
3. For Details D and E, see "Tower Splice Details No.11" sheet.
4. For Detail F, see "Tower Splice Details No.12" sheet.
5. The tower splice connections are designed as slip critical connections with class B contact surface (slip coefficient 0.5). The Contractor shall ensure that the flatness requirements are met at the faying surfaces.
6. Stiffeners A1, E7, and D4 shall not be tapered.
7. For stiffeners A1, E2, E7, and D4, see"Tower Splice Details No.12" sheet.
8. Caulk sealing shall be applied around the perimeter (horizontal and vertical edges) of all exterior splice plates.
9. Caulk sealing shall be applied along the exposed upper horizontal edge and exposed vertical edges of all interior splice plates, interior corner splice plates, and shim plates. For upper horizontal edges, caulk sealing shall be continuous through the longitudinal stiffener plates by filling the gap between longitudinal stiffener plates and interior splice plates.

3

CONTRACT CHANGE ORDER NO. ____
SHEET ____ OF ____

REQUESTS FOR INFORMATION NOT ADDRESSED IN THIS CCO REMAIN IN FORCE

MARK	DATE	DESCRIPTIONS	BY	CH'D	CCO#
3	08/10/12	TOWER CAULKING	NV	MN	256
2	07/07/08	CAULKING	MN	NV	66
1	06/23/06	SPLICE PLATES PER ISM	MN	NV	21

REVISIONS

R. Valizadeh/V. Toan/Y.L./W.L./F.C.
DESIGN OVERSIGHT
SIGN OFF DATE 08/10/12

DESIGN	BY M. Nader	CHECKED	N. Vo
DETAILS	BY J. Lopez	CHECKED	N. Vo
QUANTITIES	BY J. Lopez	CHECKED	N. Vo

PREPARED FOR THE STATE OF CALIFORNIA DEPARTMENT OF TRANSPORTATION

ALL DIMENSIONS ARE IN MILLIMETERS UNLESS OTHERWISE SHOWN

R. Manzanarez
PROJECT ENGINEER

BRIDGE NO. 34-0006L/R
KILOMETER POST 13.2/13.9

SAN FRANCISCO OAKLAND BAY BRIDGE
EAST SPAN SEISMIC SAFETY PROJECT
SELF-ANCHORED SUSPENSION BRIDGE
(SUPERSTRUCTURE & TOWER)

TOWER SPLICE DETAILS NO. 8

Rev. Date: 5-18-98

ORIGINAL SCALE IN MILLIMETERS FOR REDUCED PLANS 0 10 20 30 40 50 60 70 80 90 100

CU 04
EA 0120F1

DISREGARD PRINTS BEARING EARLIER REVISION DATES

REVISION DATES (PRELIMINARY STAGE ONLY) 05/17/01 04/08/02 07/01/02 12/18/02 11/13/05

SHEET 130R3 OF

FILE => I:\bb\04-012001\sas\contract plans and cco\cco\cco*256\1-original 08-10-12\dgn\aetsp08.dgn

USERNAME => DWinrow DATE PLOTTED => 10 AUG 2012 TIME PLOTTED => 14:17:16

100% PS&E

DIST.	COUNTY	ROUTE	KILOMETER POST TOTAL PROJECT	SHEET NO.	TOTAL SHEETS
04	SF	80	13.2/13.9	552R3	1204

REGISTERED ENGINEER - CIVIL

12-6-04
PLANS APPROVAL DATE

REGISTERED PROFESSIONAL ENGINEER Marwan N. Nader No. C 054426 Exp. 12/31/13 CIVIL STATE OF CALIFORNIA

The State of California or its officers or agents shall not be responsible for the accuracy or completeness of electronic copies of this plan sheet.

T.Y. LIN / MOFFATT & NICHOL
825 BATTERY STREET
SAN FRANCISCO, CA 94111

Caltrans now has a web site! To get to the web site, go to: http://www.dot.ca.gov

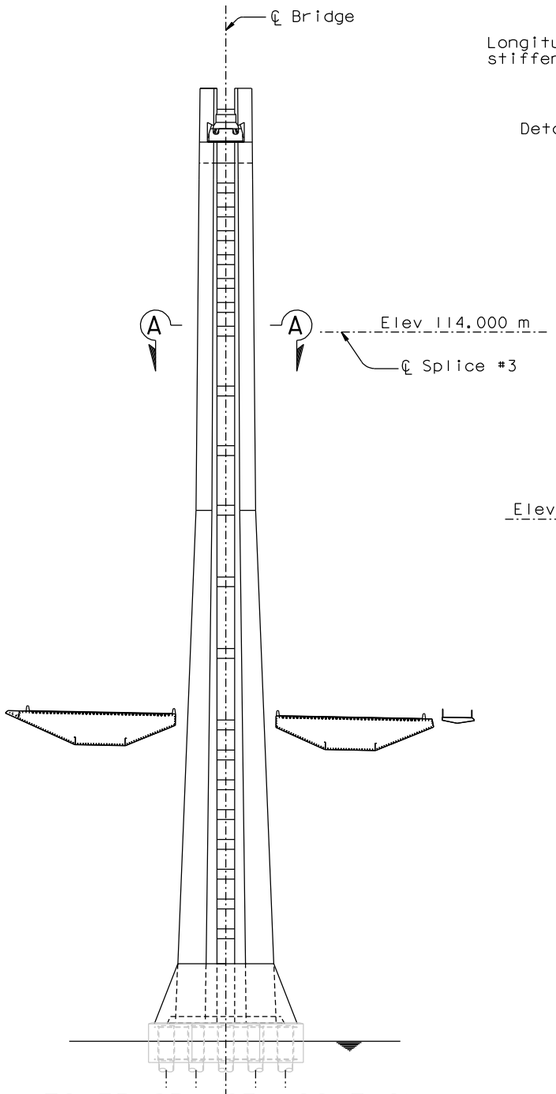

TOWER SPLICE LOCATION
1:500

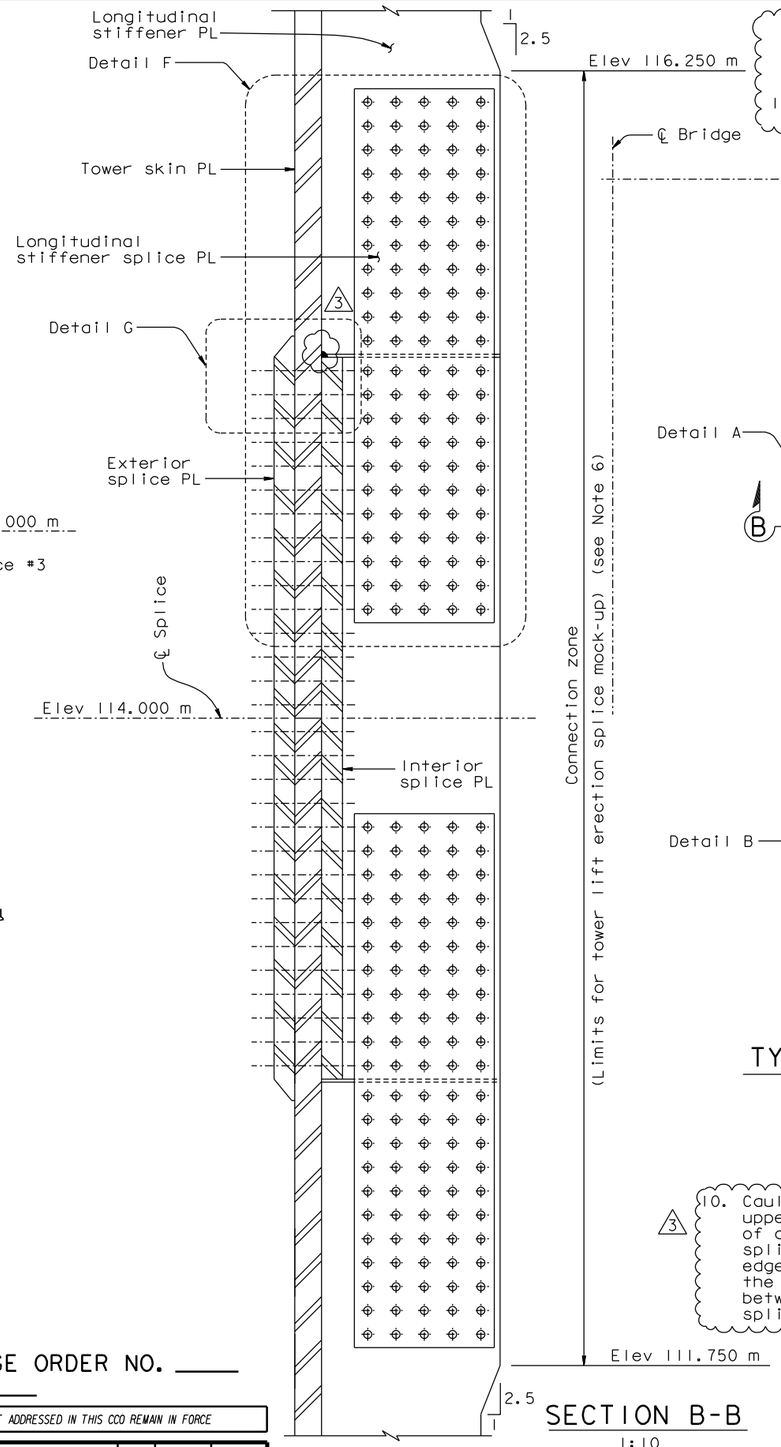

SECTION B-B
1:10

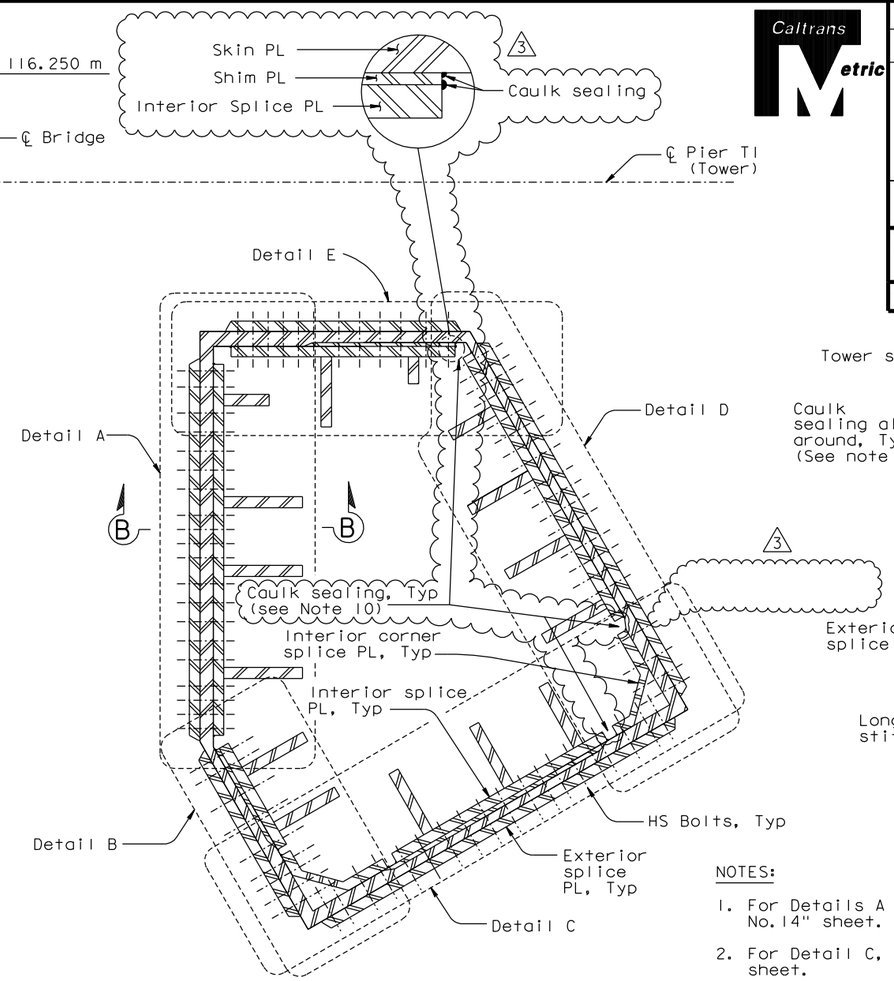

SECTION A-A
1:20

TYPICAL TOWER SHAFT SPLICE #3

(Limits for mock-up)
(see Note 6)

LEGEND:

M27 A490-X HS Bolt

3 10. Caulk sealing shall be applied along the exposed upper horizontal edge and exposed vertical edges of all interior splice plates, interior corner splice plates, and shim plates. For upper horizontal edges, caulk sealing shall be continuous through the longitudinal stiffener plates by filling the gap between longitudinal stiffener plates and interior splice plates.

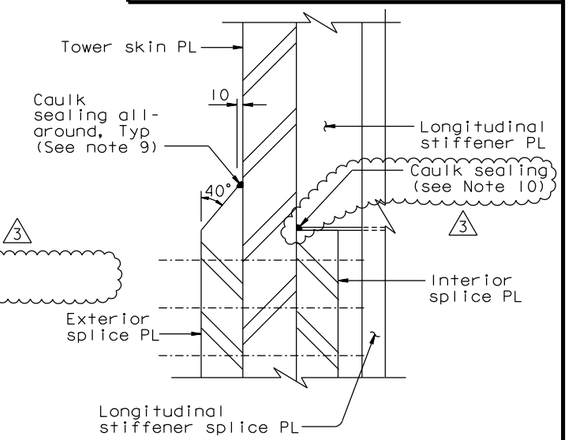

DETAIL G
1:5

NOTES:

1. For Details A and B, see "Tower Splice Details No.14" sheet.
2. For Detail C, see "Tower Splice Details No.15" sheet.
3. For Details D and E, see "Tower Splice Details No.16" sheet.
4. For Detail F, see "Tower Splice Details No.17" sheet.
5. The tower splice connections are designed as slip critical connections with class B contact surface (slip coefficient 0.5). The Contractor shall ensure that the flatness requirements are met at the faying surfaces.
6. Mock-up for tower lift erection splice shall be made for one shaft only. Limits shown apply to either all bolted, combined bolted and welded, or all welded splice.
7. Stiffeners A1, E7, and D4 shall not be tapered.
8. For stiffeners A1, E7, and D4 see "Tower Splice Details No.17" sheet.
9. Caulk sealing shall be applied around the perimeter (horizontal and vertical edges) of all exterior splice plates.

CONTRACT CHANGE ORDER NO. ____
SHEET ____ OF ____

REQUESTS FOR INFORMATION NOT ADDRESSED IN THIS CCO REMAIN IN FORCE

MARK	DATE	DESCRIPTIONS	BY	CH'D	CCO#
3	08/10/12	TOWER CAULKING	NV	MN	256
2	07/07/08	CAULKING	MN	NV	66
1	06/23/06	SPLICE PLATES PER ISM	MN	NV	21

REVISIONS

ALL DIMENSIONS ARE IN MILLIMETERS UNLESS OTHERWISE SHOWN

R. Valizadeh/V. Toan/Y.L./W.L./F.C.
DESIGN OVERSIGHT
Rezan Valizadeh / Vong Toan / Y. Liu
SIGN OFF DATE 08/10/12

DESIGN	BY M. Nader	CHECKED N. Vo	
DETAILS	BY J. Lopez	CHECKED N. Vo	
QUANTITIES	BY J. Lopez	CHECKED N. Vo	

PREPARED FOR THE STATE OF CALIFORNIA DEPARTMENT OF TRANSPORTATION

R. Manzanarez
PROJECT ENGINEER

BRIDGE NO. 34-0006L/R
KILOMETER POST 13.2/13.9

SAN FRANCISCO OAKLAND BAY BRIDGE
EAST SPAN SEISMIC SAFETY PROJECT
SELF-ANCHORED SUSPENSION BRIDGE
(SUPERSTRUCTURE & TOWER)

TOWER SPLICE DETAILS NO.13

Rev. Date: 5-18-98

ORIGINAL SCALE IN MILLIMETERS FOR REDUCED PLANS 0 10 20 30 40 50 60 70 80 90 100

CU 04
EA 0120F1

DISREGARD PRINTS BEARING EARLIER REVISION DATES

REVISION DATES (PRELIMINARY STAGE ONLY) 05/31/01 04/08/02 07/01/02 12/18/02 11/13/05

SHEET 135R3 OF

FILE => I:\bb\04-012001\sas\contract plans and cco\cco\cco*256\1-original 08-10-12\dgn\aetspl3.dgn

USERNAME => DWinrow DATE PLOTTED => 10 AUG 2012 TIME PLOTTED => 14:18:05

100 % PS&E

DIST.	COUNTY	ROUTE	KILOMETER POST TOTAL PROJECT	SHEET NO.	TOTAL SHEETS
04	SF	80	13.2/13.9	557R2	1204

REGISTERED ENGINEER - CIVIL

12-6-04

PLANS APPROVAL DATE

REGISTERED PROFESSIONAL ENGINEER Marwan N. Nader No. C 054426 Exp. 12/31/13 CIVIL STATE OF CALIFORNIA

The State of California or its officers or agents shall not be responsible for the accuracy or completeness of electronic copies of this plan sheet.

T.Y. LIN / MOFFATT & NICHOL
825 BATTERY STREET
SAN FRANCISCO, CA 94111

Caltrans now has a web site! To get to the web site, go to: http://www.dot.ca.gov

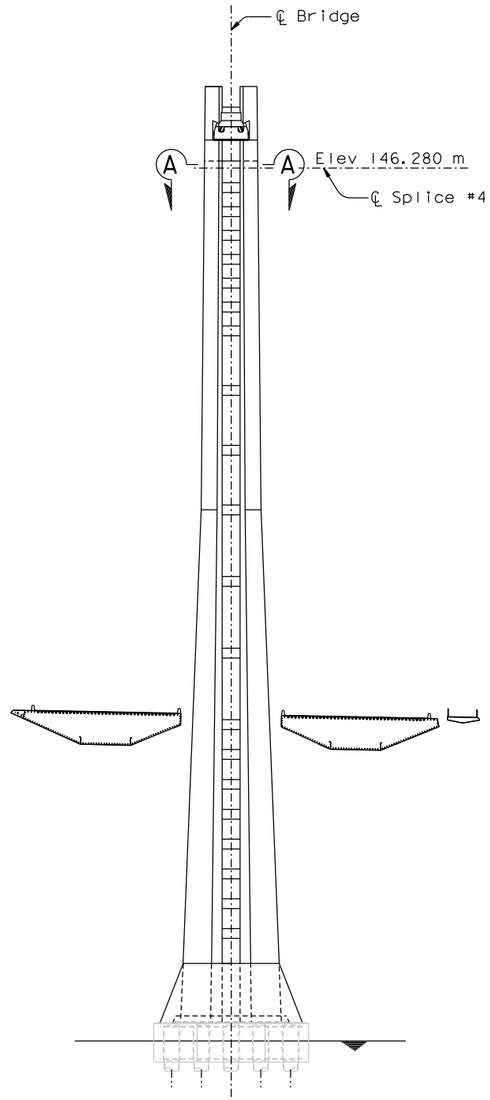

TOWER SPLICE LOCATION
1:500

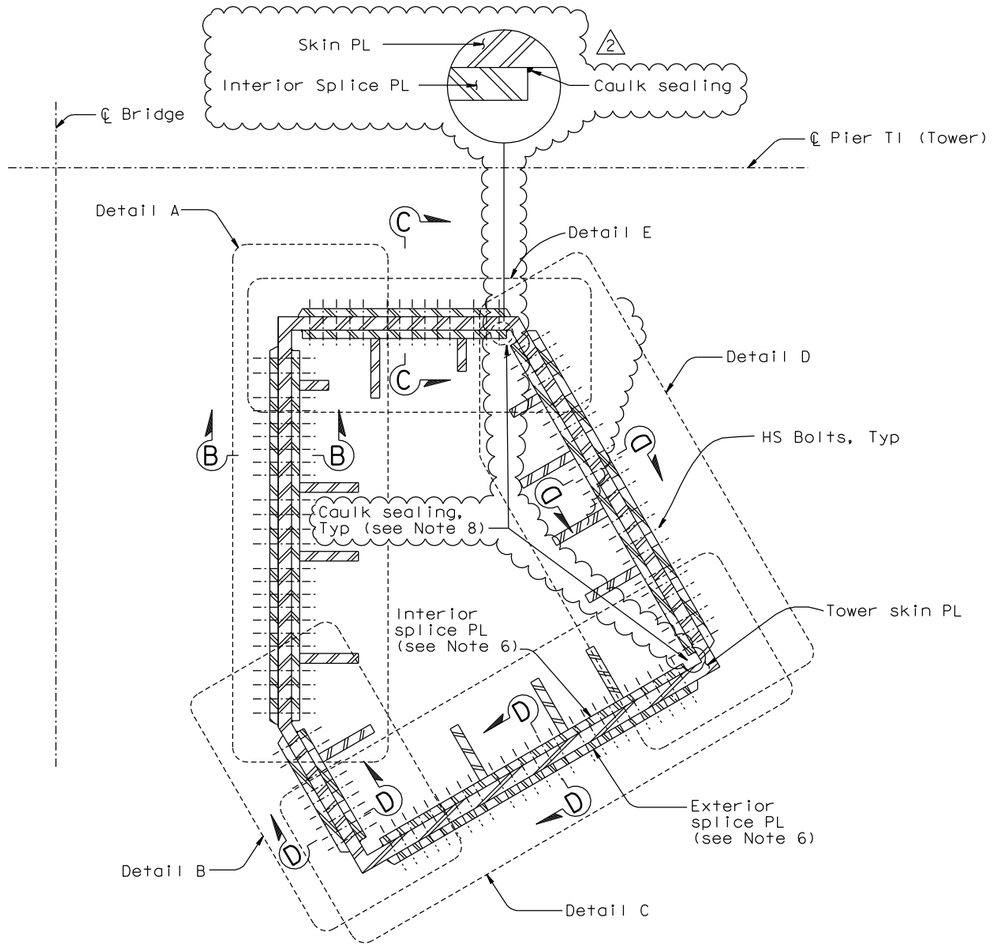

4 SECTION A-A
1:20

TOWER SHAFT SPLICE #4
(Tower Grillage to Tower Shaft Splice)

NOTES:

1. For Sections B-B, C-C and D-D, see "Tower Splice Details No.19" sheet.
2. For Details A and B, see "Tower Splice Details No.20" sheet.
3. For Details C and D, see "Tower Splice Details No.21" sheet.
4. For Detail E, see "Tower Splice Details No.22" sheet.
5. For tower grillage details, see "Tower Saddle Grillage Details" sheets.
6. For splice #4, splice plates shall be A709M HPS 485W steel. For limits of steel type, see "Tower Splice Details No.19" sheet.
7. The tower splice connections are designed as slip critical connections with class B contact surface (slip coefficient 0.5). The Contractor shall ensure that the flatness requirements are met at the faying surfaces.
8. Caulk sealing shall be applied along the exposed upper horizontal edge and exposed vertical edges of all interior splice plates, interior corner splice plates, and shim plates. For upper horizontal edges, caulk sealing shall be continuous through the longitudinal stiffener plates by filling the gap between longitudinal stiffener plates and interior splice plates. (2)

4 REVISED PER ADDENDUM NO. 4 DATED DECEMBER 9, 2005

CONTRACT CHANGE ORDER NO. _____
SHEET ____ OF ____

REQUESTS FOR INFORMATION NOT ADDRESSED IN THIS CCO REMAIN IN FORCE

ALL DIMENSIONS ARE IN MILLIMETERS UNLESS OTHERWISE SHOWN

R. Valizadeh/V. Toan/Y.L./W.L./F.C.
DESIGN OVERSIGHT
Roya Valizadeh / Vong Toan / Y. Liu
SIGN OFF DATE 08/10/12

MARK	DATE	DESCRIPTIONS	BY	CH'D	CCO#
2	08/10/12	TOWER CAULKING	NV	MN	256
1	06/23/06	SPLICE PLATES PER ISM	MN	NV	21

REVISIONS

	BY	CHECKED
DESIGN	M. Nader	M. Gulyas
DETAILS	C. Choi	N. Vo
QUANTITIES	R. Kanitkar	Y. Zhang

PREPARED FOR THE STATE OF CALIFORNIA DEPARTMENT OF TRANSPORTATION

R. Manzanarez
PROJECT ENGINEER

BRIDGE NO. 34-0006L/R
KILOMETER POST 13.2/13.9

SAN FRANCISCO OAKLAND BAY BRIDGE
EAST SPAN SEISMIC SAFETY PROJECT
SELF-ANCHORED SUSPENSION BRIDGE
(SUPERSTRUCTURE & TOWER)

TOWER SPLICE DETAILS NO.18

Rev. Date: 5-18-98

ORIGINAL SCALE IN MILLIMETERS FOR REDUCED PLANS 0 10 20 30 40 50 60 70 80 90 100

CU 04
EA 0120F1

DISREGARD PRINTS BEARING EARLIER REVISION DATES

REVISION DATES (PRELIMINARY STAGE ONLY): 05/17/01 04/08/02 07/01/02 12/18/02 11/13/05

SHEET 140R2 OF

FILE => I:\bb\04-01200I\sas\contract plans and cco\cco\cco#256\1-original 08-10-12\dgn\aetspl8.dgn

USERNAME => DWinrow DATE PLOTTED => 10 AUG 2012 TIME PLOTTED => 14:19:23

100 % PS&E

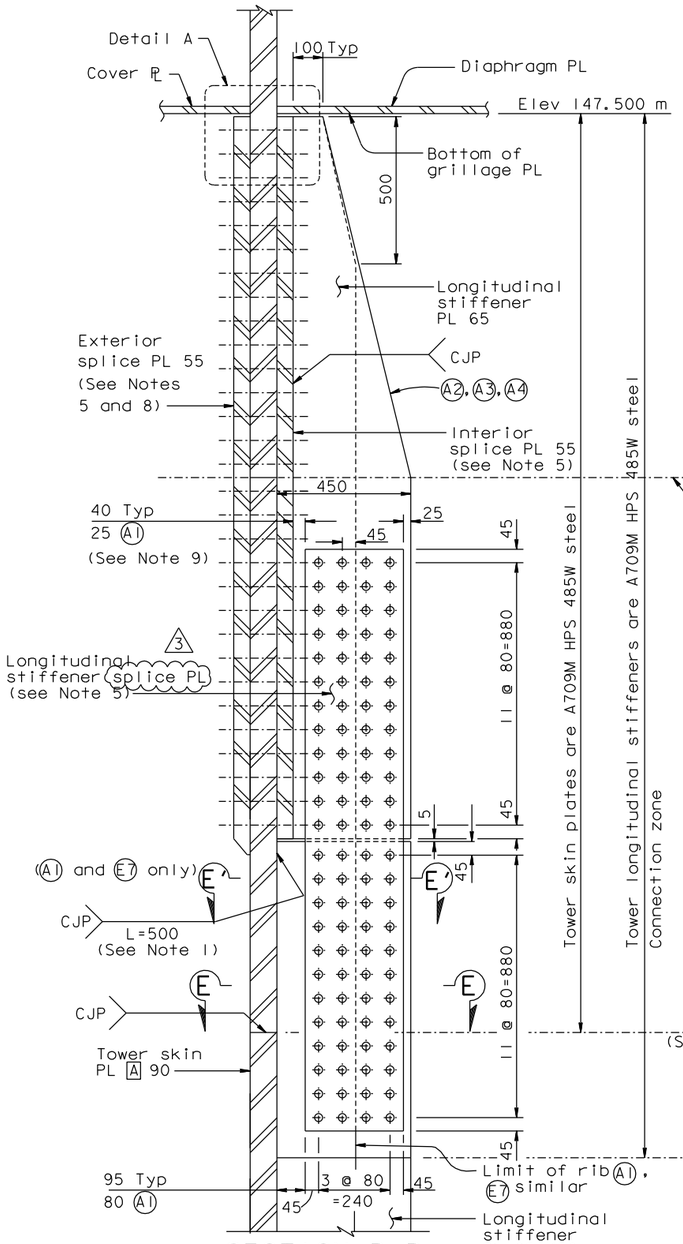

SECTION B-B

1:10

TOWER SKIN PLATE A

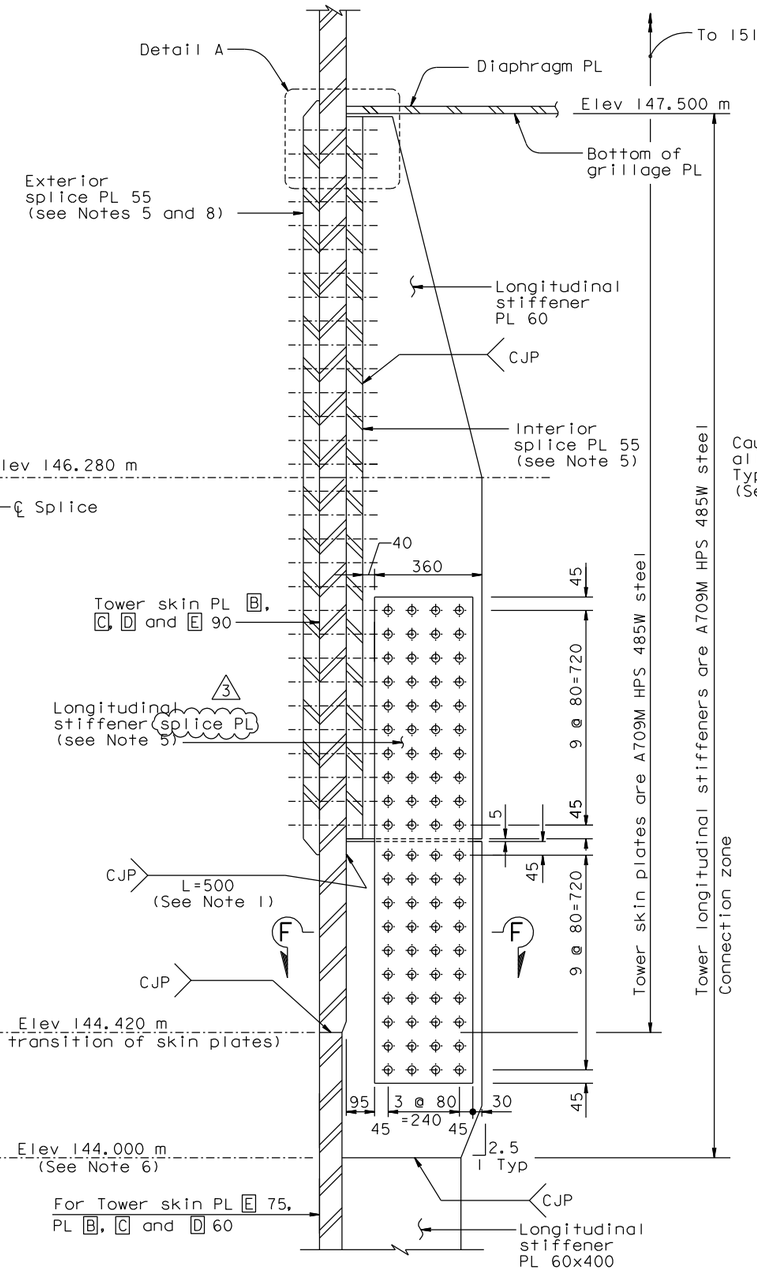

SECTION C-C (Section D-D similar)

1:10

TOWER SKIN PLATE B TO E

(Except E7)

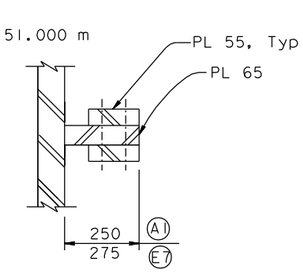

SECTION E'-E' (A1 and E7 only)

1:10

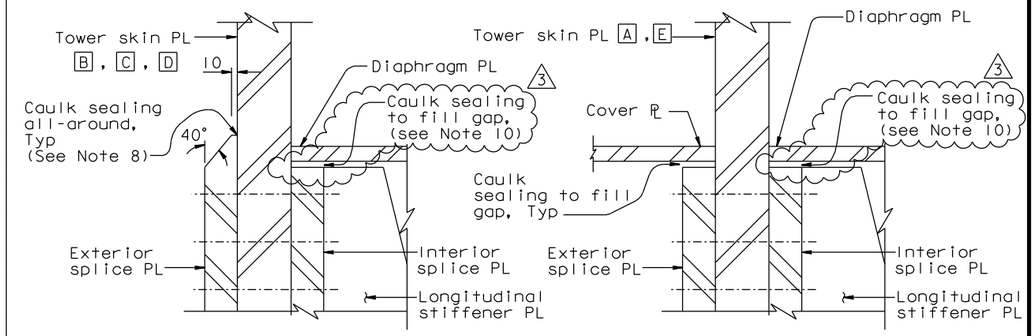

DETAIL A (see Note 7)

1:5

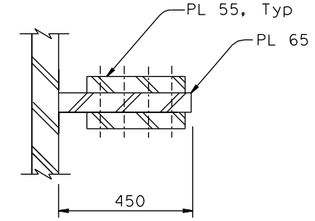

SECTION E-E (A2, A3, A4)

1:10

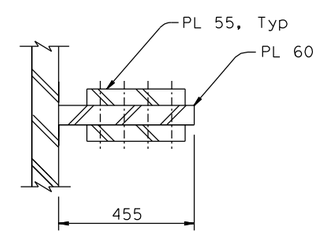

SECTION F-F

1:10

LEGEND:

M27 A490-X HS Bolt

ALL DIMENSIONS ARE IN MILLIMETERS UNLESS OTHERWISE SHOWN

NOTES:

1. Weld of longitudinal stiffener to the tower shaft skin plates beyond the length indicated shall be in accordance with Table 1 in "Tower Splice Details No.2" sheet.
2. Longitudinal stiffeners for skin plate "A" are 450 deep UNO. Longitudinal stiffeners for skin plates "B" through "E" are 455 deep UNO.
3. For tower grillage details, see "Tower Saddle Grillage Details" sheets.
4. For tower plate and stiffener sizes above elevation 144.000 m, see "Tower Saddle Grillage Details" sheets.
5. For splice #4, splice plates shall be A709M HPS 485W steel.
6. Elevation 144 corresponds to the change of stiffener size, see "Tower Shaft Details" sheets.
7. Longitudinal stiffeners B1 and D4 shall be coped at the top as shown on "Tower Saddle Grillage Details No.7" sheet.
8. Caulk sealing shall be applied around the perimeter (horizontal and vertical edges) of all exterior splice plates.
9. To facilitate installation of the bolted splice for longitudinal stiffener A1, the Contractor may use counterbore for the bolt head in the interior splice plate for the first bolt row on each side of the longitudinal stiffener. Each counterbore shall be 60 mm Dia and 10 mm deep. See Detail A on "Tower Splice Details No.16" sheet.
10. Caulk sealing shall be applied along the exposed upper horizontal edge and exposed vertical edges of all interior splice plates. For upper horizontal edges, caulk sealing shall fill the gap between the diaphragm plates and interior splice plates.

CONTRACT CHANGE ORDER NO. ____
SHEET ___ OF ___

REQUESTS FOR INFORMATION NOT ADDRESSED IN THIS CCO REMAIN IN FORCE

MARK	DATE	DESCRIPTIONS	BY	CH'D	CCO#
3	08/10/12	TOWER CAULKING	NV	MN	256
2	07/07/08	CAULKING	MN	NV	66
1	06/23/06	LONG. STIFFENER GAP & MISC.	MN	NV	21

REVISIONS

R. Valizadeh/V. Toan/Y.L./W.L./F.C.
DESIGN OVERSIGHT
Y. Liu
SIGN OFF DATE 08/10/12

	BY	CHECKED
DESIGN	M. Nader	M. Gulyas
DETAILS	R. Kanitkar	M. Gulyas
QUANTITIES	R. Kanitkar	Y. Zhang

PREPARED FOR THE STATE OF CALIFORNIA DEPARTMENT OF TRANSPORTATION

R. Manzanarez
PROJECT ENGINEER

BRIDGE NO. 34-0006L/R
KILOMETER POST 13.2/13.9

SAN FRANCISCO OAKLAND BAY BRIDGE
EAST SPAN SEISMIC SAFETY PROJECT
SELF-ANCHORED SUSPENSION BRIDGE
(SUPERSTRUCTURE & TOWER)

TOWER SPLICE DETAILS NO. 19

Caltrans Metric

DIST.	COUNTY	ROUTE	KILOMETER POST TOTAL PROJECT	SHEET NO.	TOTAL SHEETS
04	SF	80	13.2/13.9	558R3	1204

REGISTERED ENGINEER - CIVIL
1-27-03
PLANS APPROVAL DATE

REGISTERED PROFESSIONAL ENGINEER Marwan N. Nader No. C 054426 Exp. 12/31/13 CIVIL STATE OF CALIFORNIA

The State of California or its officers or agents shall not be responsible for the accuracy or completeness of electronic copies of this plan sheet.

T.Y. LIN / MOFFATT & NICHOL
825 BATTERY STREET
SAN FRANCISCO, CA 94111

Caltrans now has a web site! To get to the web site, go to: http://www.dot.ca.gov

Rev. Date: 5-18-98

ORIGINAL SCALE IN MILLIMETERS FOR REDUCED PLANS 0 10 20 30 40 50 60 70 80 90 100

CU 04
EA 0120F1

DISREGARD PRINTS BEARING EARLIER REVISION DATES

REVISION DATES (PRELIMINARY STAGE ONLY) 05/31/01 04/08/02 07/01/02 12/18/02 11/13/05

SHEET 141R3 OF

FILE => I:\bb\04-012001\sas\contract plans and cco\cco\cco#256\1-original 08-10-12\dgn\aetsp19.dgn

USERNAME => DWinrow DATE PLOTTED => 10 AUG 2012 TIME PLOTTED => 14:20:19

100% PS&E