DIST.	COUNTY	ROUTE	KILOMETER POST TOTAL PROJECT	SHEET NO.	TOTAL SHEETS
04	SF	80	13.2/13.9	542R3	1204

REGISTERED ENGINEER - CIVIL

12-6-04
PLANS APPROVAL DATE

REGISTERED PROFESSIONAL ENGINEER Marwan N. Nader No. C 054426 Exp. 12/31/13 CIVIL STATE OF CALIFORNIA

The State of California or its officers or agents shall not be responsible for the accuracy or completeness of electronic copies of this plan sheet.

T.Y. LIN / MOFFATT & NICHOL
825 BATTERY STREET
SAN FRANCISCO, CA 94111

Caltrans now has a web site! To get to the web site, go to: http://www.dot.ca.gov

Caltrans Metric

TABLE 1

Optional Tower Bolted Splice Locations	
Splice	Elevation (m)
1	50.300
2	83.000
3	114.000
4	146.280

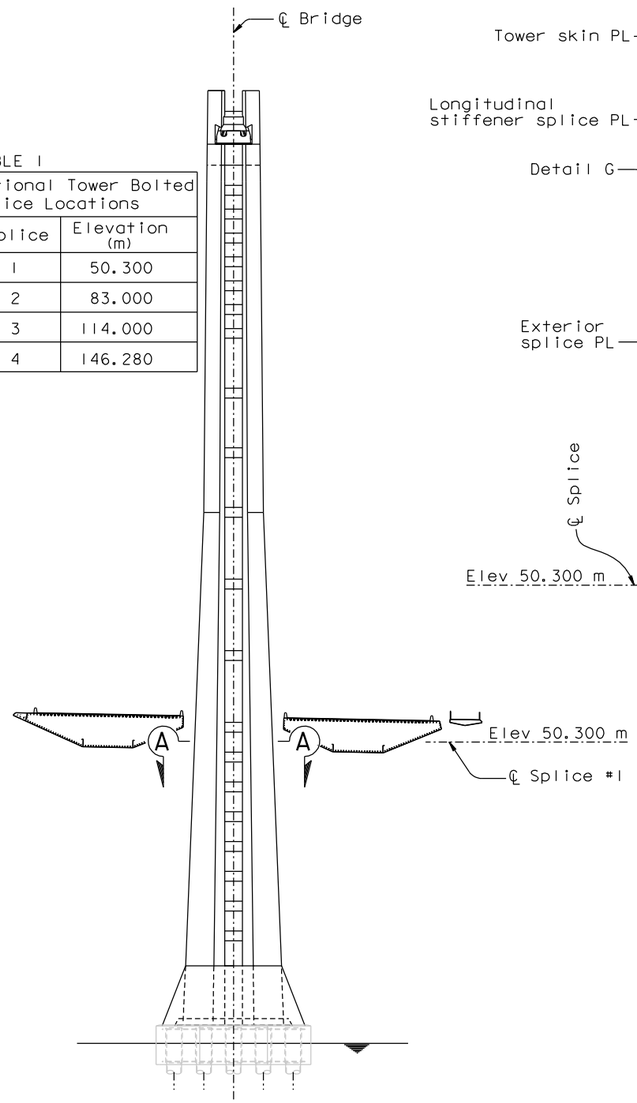

TOWER SPLICE LOCATION
1:500

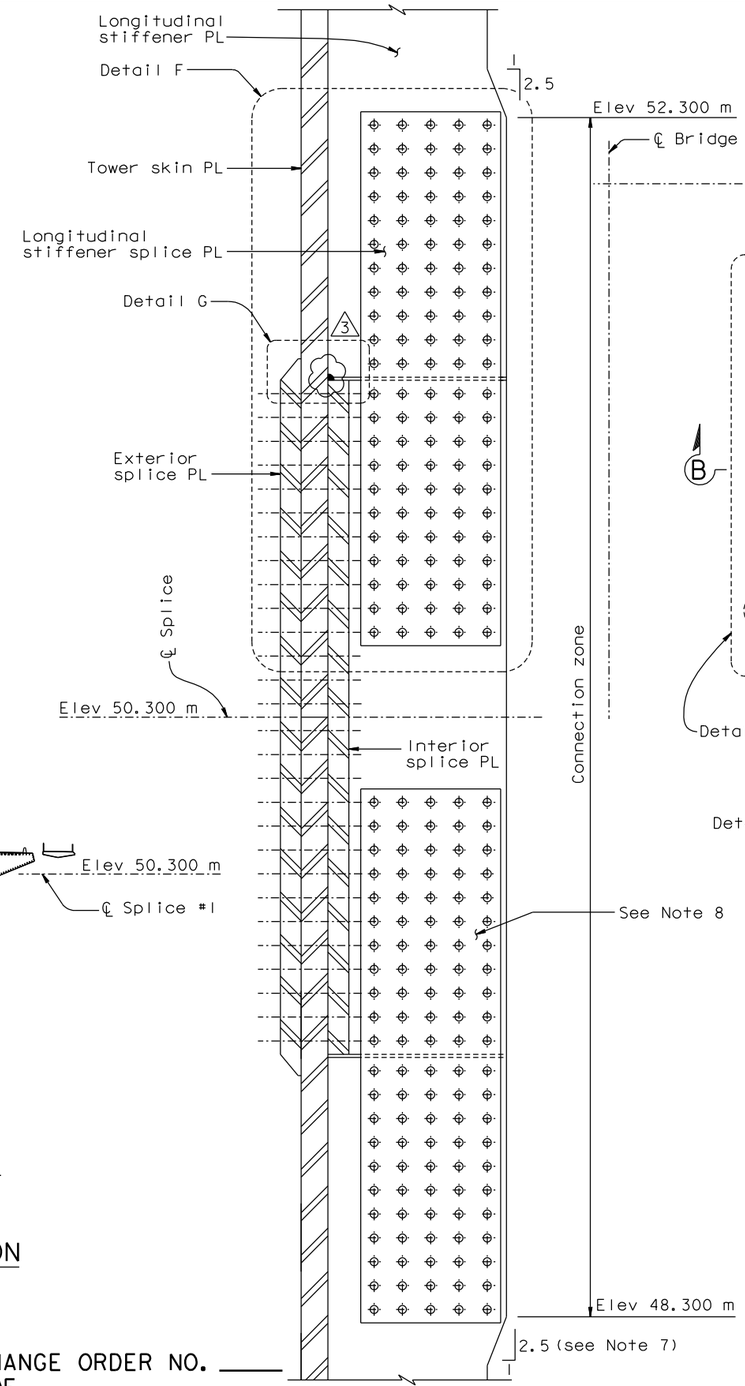

SECTION B-B
1:10

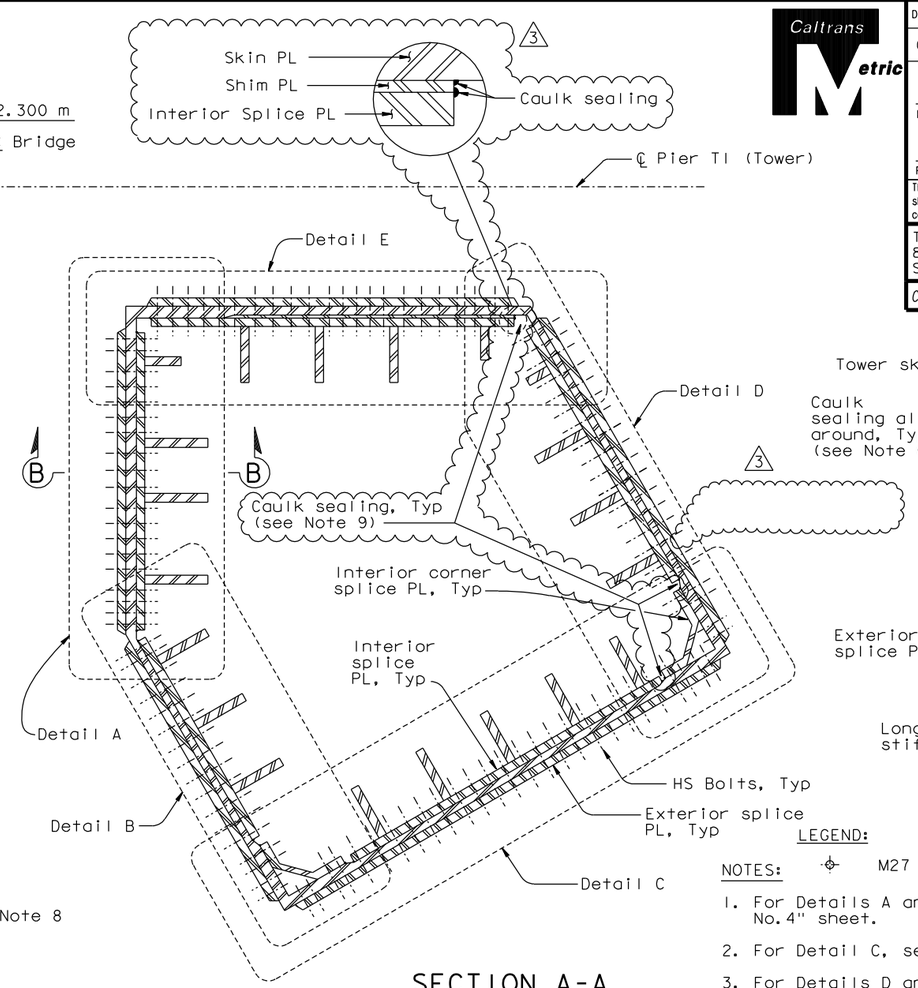

SECTION A-A
1:25

TYPICAL TOWER SHAFT SPLICE #1

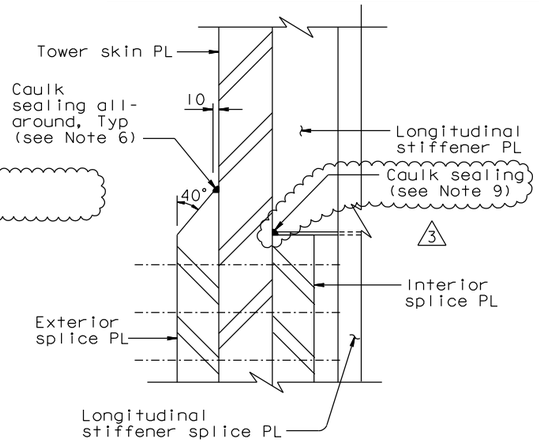

DETAIL G
1:5

LEGEND:

⊕ M27 A490-X HS Bolt

NOTES:

1. For Details A and B, see "Tower Splice Details No.4" sheet.
2. For Detail C, see "Tower Splice Details No.5" sheet.
3. For Details D and E, see "Tower Splice Details No. 6" sheet.
4. For Detail F, see "Tower Splice Details No.7" sheet.
5. The tower splice connections are designed as slip critical connections with class B contact surface (slip coefficient 0.5). The Contractor shall ensure that the flatness requirements are met at the faying surfaces.
6. Caulk sealing shall be applied around the perimeter (horizontal and vertical edges) of all exterior splice plates.
7. Stiffeners A1, E7, and D4 shall not be tapered.
8. For stiffeners A1, B4, E4, E7, and D4, see "Tower Splice Details No.7" sheet.
9. (3) Caulk sealing shall be applied along the exposed upper horizontal edge and exposed vertical edges of all interior splice plates, interior corner splice plates, and shim plates. For upper horizontal edges, caulk sealing shall be continuous through the longitudinal stiffener plates by filling the gap between longitudinal stiffener plates and interior splice plates.

CONTRACT CHANGE ORDER NO. ____
SHEET ____ OF ____

REQUESTS FOR INFORMATION NOT ADDRESSED IN THIS CCO REMAIN IN FORCE

ALL DIMENSIONS ARE IN MILLIMETERS UNLESS OTHERWISE SHOWN

MARK	DATE	DESCRIPTIONS	BY	CH'D	CCO#
3	08/10/12	TOWER CAULKING	NV	MN	256
2	07/07/08	CAULKING	MN	NV	66
1	06/23/06	SPLICE PLATES PER ISM	MN	NV	21

REVISIONS

R. Valizadeh/V. Toan/Y.L./W.L./F.C.
DESIGN OVERSIGHT
SIGN OFF DATE 08/10/12

	BY	CHECKED
DESIGN	M. Nader	M. Gulyas
DETAILS	J. Lopez	N. Vo
QUANTITIES	L. Rus	Y. Zhang

PREPARED FOR THE STATE OF CALIFORNIA DEPARTMENT OF TRANSPORTATION

R. Manzanarez
PROJECT ENGINEER

BRIDGE NO. 34-0006L/R
KILOMETER POST 13.2/13.9

SAN FRANCISCO OAKLAND BAY BRIDGE
EAST SPAN SEISMIC SAFETY PROJECT
SELF-ANCHORED SUSPENSION BRIDGE
(SUPERSTRUCTURE & TOWER)

TOWER SPLICE DETAILS NO. 3

Rev. Date: 5-18-98

ORIGINAL SCALE IN MILLIMETERS FOR REDUCED PLANS 0 10 20 30 40 50 60 70 80 90 100

CU 04
EA 0120F1

DISREGARD PRINTS BEARING EARLIER REVISION DATES

REVISION DATES (PRELIMINARY STAGE ONLY): 05/17/01 04/08/02 07/01/02 12/19/02 10/13/05 11/13/05 12/07/05

SHEET 125R3 OF

FILE => I:\bb\04-012001\sas\contract plans and cco\cco\cco#256\1-original 08-10-12\dgn\aetsp03.dgn

USERNAME => DWinrow DATE PLOTTED => 10 AUG 2012 TIME PLOTTED => 14:16:01

100% PS&E