DIST	COUNTY	ROUTE	KILOMETER POST TOTAL PROJECT	SHEET No	TOTAL SHEETS
04	SF	80	13.2/13.9	118 R5	1204

REGISTERED ELECTRICAL ENGINEER 12/19/02 DATE

12-6-04
PLANS APPROVAL DATE

REGISTERED PROFESSIONAL ENGINEER JENS ERLINGSSON No. 8249 Exp. 9/30/06 ELECTRICAL STATE OF CALIFORNIA

PB POWER, Inc.
A Parsons Brinckerhoff Company
303 Second St., Suite 700N
San Francisco, CA 94107-1317

The State of California or its officers or agents shall not be responsible for the accuracy or completeness of electronic copies of this plan sheet.

Caltrans now has a web site! To get to the web site, go to http://www.dot.ca.gov

Caltrans Metric

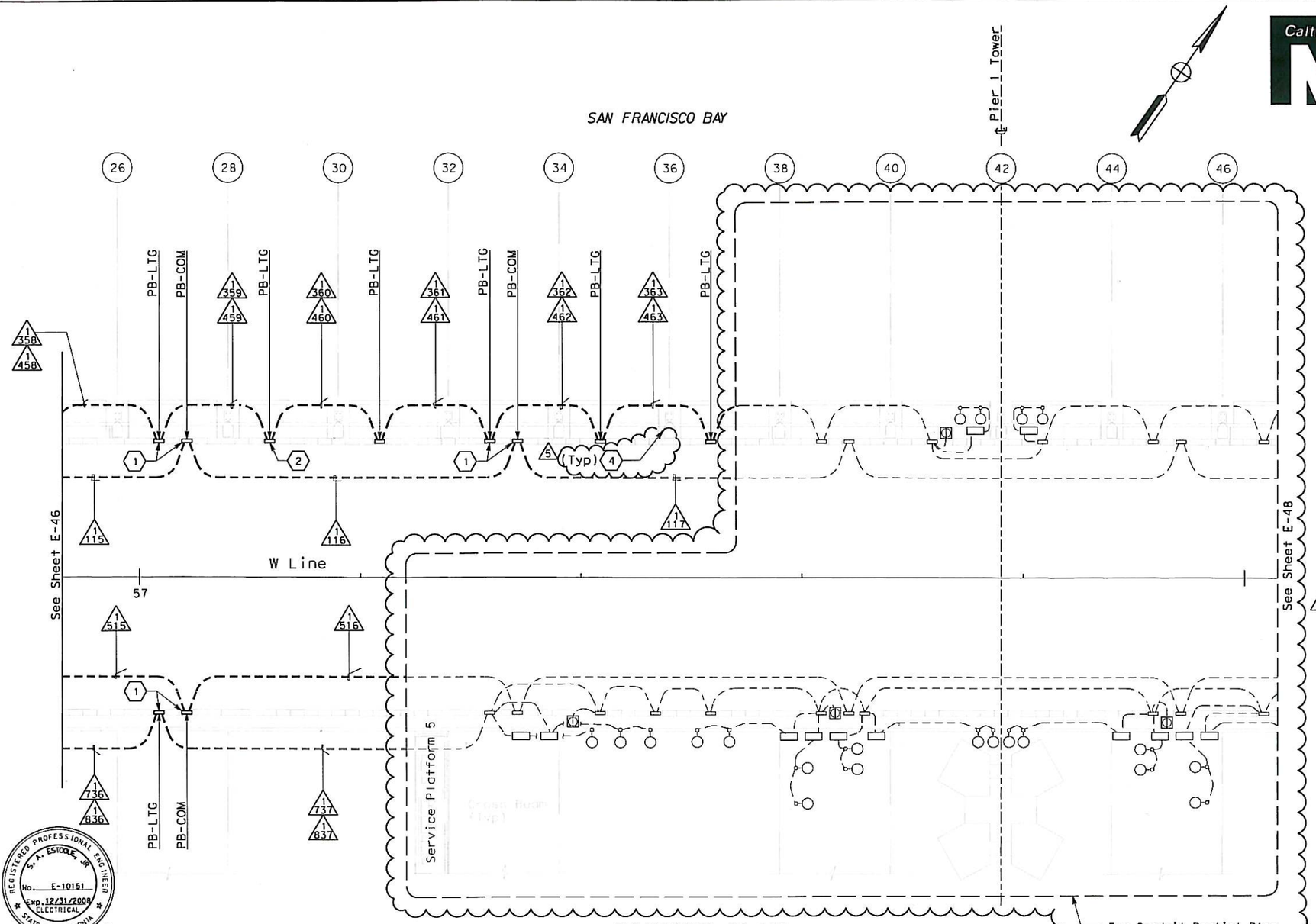

CONDUIT PLAN

SHEET NOTES:

1. Conduit from barrier pullbox or other equipment down into Girder, See sheet E-97.
2. For conduit to Suspend Lighting, See sheet E-227. Typ for all PB-LTG located on the north side of the roadway.
3. DELETED
4. See sheet E-67B for Suspender Uplight conduit location.
5. DELETED
6. DELETED

NOTES:

1. References:
   - For typical details and locations of conduit connections to light poles, barrier outlet boxes, call boxes, overhead sign lighting, CCTV and MVDS, see sheets E-67, E-68 and E-68.
   - TOS equipment is shown for conduit routing only. For typical details of TOS controller and devices, see sheets E-344 through E-357.
   - For types of pullboxes, splice boxes and enclosures, see sheet E-83.
   - For circuit and conduit/cable tray schedules, see sheets starting at E-401.
2. For Roadway Call Boxes, refer to sheet E-396.
3. For Roadway Level Lighting Pole Schedule, see sheet E-82.
4. For Roadway Level Call Box Schedule, see sheet E-397.
5. For number of lighting fixtures (main tower lights), see lighting schedule sheets E-271 and E-272.

REGISTERED PROFESSIONAL ENGINEER S. A. ESTOQUE, JR. No. E-10151 Exp. 12/31/2008 ELECTRICAL STATE OF CALIFORNIA

FOR REVISION ONLY 2

REGISTERED PROFESSIONAL ENGINEER MARVELL FUMIO TAKAKI No. E 8651 Exp. 9/30/2010 ELECTRICAL STATE OF CALIFORNIA

FOR REVISION ONLY 1

REQUEST FOR INFORMATION NOT ADDRESSED IN THIS CCO REMAIN IN FORCE

MARK	DATE	DESCRIPTIONS	BY	CH'D	CCO#
5	11/16/12	ROADWAY LEVEL LED FIXTURE DETAILS	RR	RG	252
4	05/25/12	SAS/SKYWAY MISCELLANEOUS ELECTRICAL CHANGES	TW	RG	191
3	10/10/08	LIGHTING REVISIONS	RY AG	RG FW	43
2	03/04/08	BARRIER MODIFICATIONS	JS BM	RG SE	44
1	02/19/08	ELECTRICAL MODIFICATIONS	MP EL	RR	42

REVISIONS

CONTRACT CHANGE ORDER NO. 252
SHEET 2 OF 44

REGISTERED PROFESSIONAL ENGINEER FADI WALIEDDINE No. 11465 Exp. 12/31/2009 ELECTRICAL STATE OF CALIFORNIA

FOR REVISION ONLY 3

REGISTERED PROFESSIONAL ENGINEER SYN YEE CHIN No. 18186 Exp. 09/30/2013 ELECTRICAL STATE OF CALIFORNIA

FOR REVISION ONLY 4

REGISTERED PROFESSIONAL ENGINEER DAVID H. OTO No. 10699 Exp. 06/30/2013 ELECTRICAL STATE OF CALIFORNIA

FOR REVISION ONLY 5

THIS PLAN IS ACCURATE FOR ELECTRICAL WORK ONLY.

SAS SUPERSTRUCTURE ROADWAY WESTBOUND
LIGHTING AND ELECTRICAL SYSTEMS

SCALE 1:200

E-47

	DATE	REVISED BY	DATE	REVISED
CALCULATED/DESIGNED BY	FK	8/02		
CHECKED BY	IAH	8/02		

DESIGN OVERSIGHT
BEHZAD GOLEMOHAMMADI

STATE OF CALIFORNIA - DEPARTMENT OF TRANSPORTATION
Caltrans

LAST REVISION 11-16-12
DATE PLOTTED => 6/26/2013
TIME PLOTTED => 9:58:47 AM

FOR REDUCED PLANS ORIGINAL SCALE IS IN MILLIMETERS 0 20 40 60 80

DGN FILE =>04-0120f1_0118R05.dgn
USERNAME =>Welsheimer

CU 04251

EA 0120F1

DIST	COUNTY	ROUTE	KILOMETER POST TOTAL PROJECT	SHEET No	TOTAL SHEETS
04	SF	80	13.2/13.9	118 S1	1204

REGISTERED ELECTRICAL ENGINEER 11/16/12 DATE

PLANS APPROVAL DATE

REGISTERED PROFESSIONAL ENGINEER DAVID H. OTO No. 10699 Exp. 06/30/2013 ELECTRICAL STATE OF CALIFORNIA

PB AMERICAS, Inc.
A Parsons Brinckerhoff Company
303 Second St., Suite 700N
San Francisco, CA 94107-1317

The State of California or its officers or agents shall not be responsible for the accuracy or completeness of electronic copies of this plan sheet.

Caltrans now has a web site! To get to the web site, go to http://www.dot.ca.gov

Caltrans Metric

SHEET NOTES:

1. See sheet E-67A for conduit details common to deck, crossbeam and counterweight mounted light fixtures.
2. See sheet E-161A for conduit details common to barrier and bike path mounted fixtures.
3. Contractor shall furnish and install UP-105 per sheet E-72. For complete scope of work on platform and other related work not shown on this sheet, see Electrical Special Provisions.
4. Contractor shall furnish and install UP-106 per sheet E-73. For complete scope of work on platform and other related work not shown on this sheet, see Electrical Special Provisions.
5. LED Driver Box.
6. See sheet E-82 for Fixture Schedule.

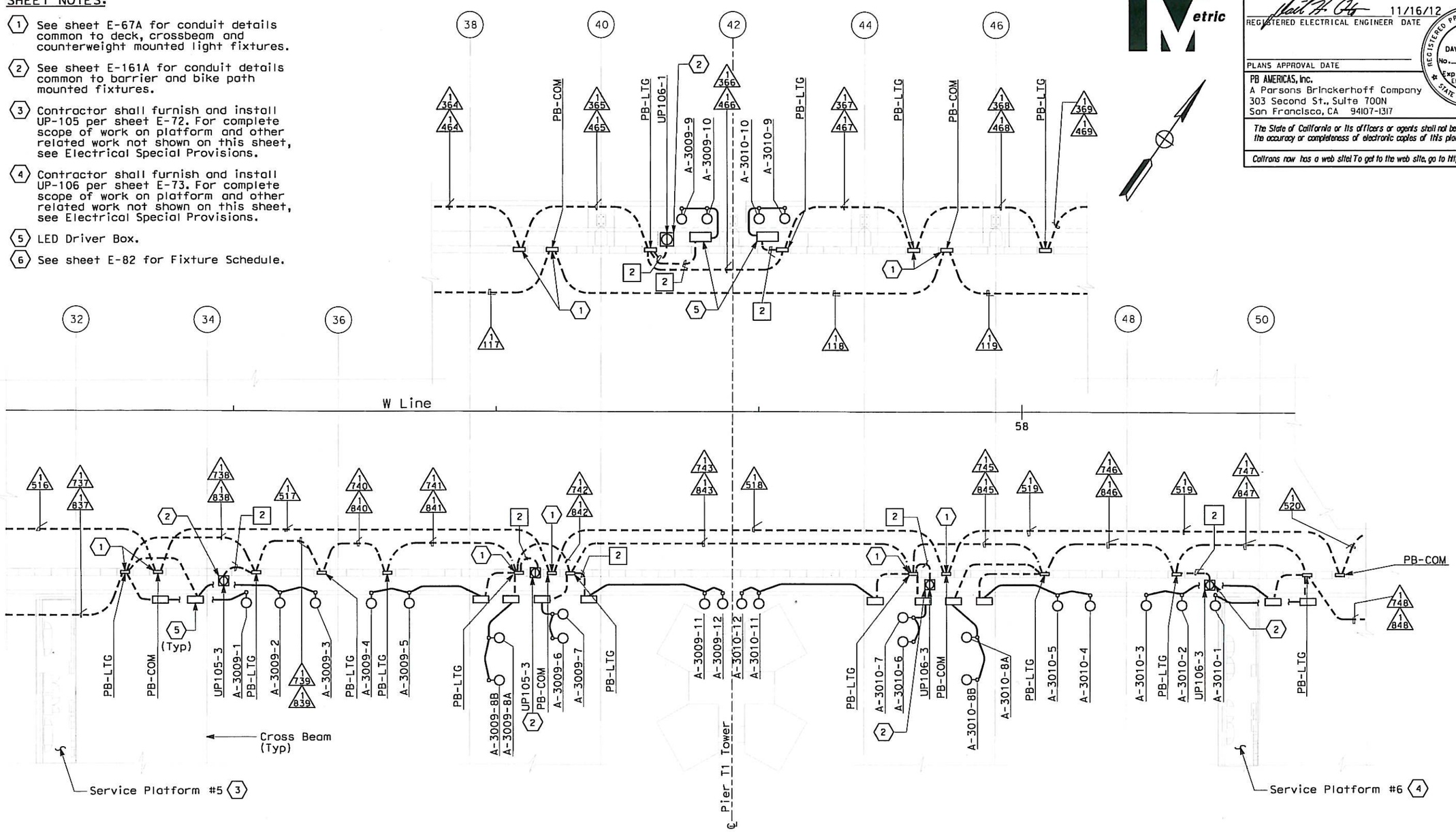

REQUEST FOR INFORMATION NOT ADDRESSED IN THIS CCO REMAIN IN FORCE					
0	11/16/12	ROADWAY LEVEL LED FIXTURE DETAILS	RR	RG	252
MARK	DATE	DESCRIPTIONS	BY	CH'D	CCO#
REVISIONS					

CONTRACT CHANGE ORDER NO. 252
SHEET 3 OF 44

CONDUIT PARTIAL PLAN

SAS SUPERSTRUCTURE ROADWAY WESTBOUND
LIGHTING AND ELECTRICAL SYSTEMS

SCALE 1:150

E-47A

THIS PLAN ACCURATE FOR ELECTRICAL WORK ONLY.

ALL DIMENSIONS ARE IN METERS UNLESS OTHERWISE SHOWN

DATE	REVISED BY	DATE	REVISED
XX/12	XX	XX/12	XX

CALCULATED/DESIGNED BY
CHECKED BY

DESIGN OVERSIGHT
BEHZAD GOLEMOHAMMADI

STATE OF CALIFORNIA - DEPARTMENT OF TRANSPORTATION
Caltrans

LAST REVISION 00-00-00
DATE PLOTTED => 6/26/2013
TIME PLOTTED => 10:00:26 AM

FOR REDUCED PLANS ORIGINAL SCALE IS IN MILLIMETERS 0 20 40 60 80

DGN FILE =>04-0120f1_0118S01.dgn
USERNAME =>Weisheimer

CU 04251

EA 0120F1

DIST	COUNTY	ROUTE	KILOMETER POST TOTAL PROJECT	SHEET No	TOTAL SHEETS
04	SF	80	13.2/13.9	119 R3	1204

REGISTERED ELECTRICAL ENGINEER 12/19/02 DATE

12-6-04
PLANS APPROVAL DATE

REGISTERED PROFESSIONAL ENGINEER JENS ERLINGSSON No. 8249 Exp. 9/30/06 ELECTRICAL STATE OF CALIFORNIA

PB POWER, Inc.
A Parsons Brinckerhoff Company
303 Second St., Suite 700N
San Francisco, CA 94107-1317

The State of California or its officers or agents shall not be responsible for the accuracy or completeness of electronic copies of this plan sheet.

Caltrans now has a web site! To get to the web site, go to http://www.dot.ca.gov

Caltrans Metric

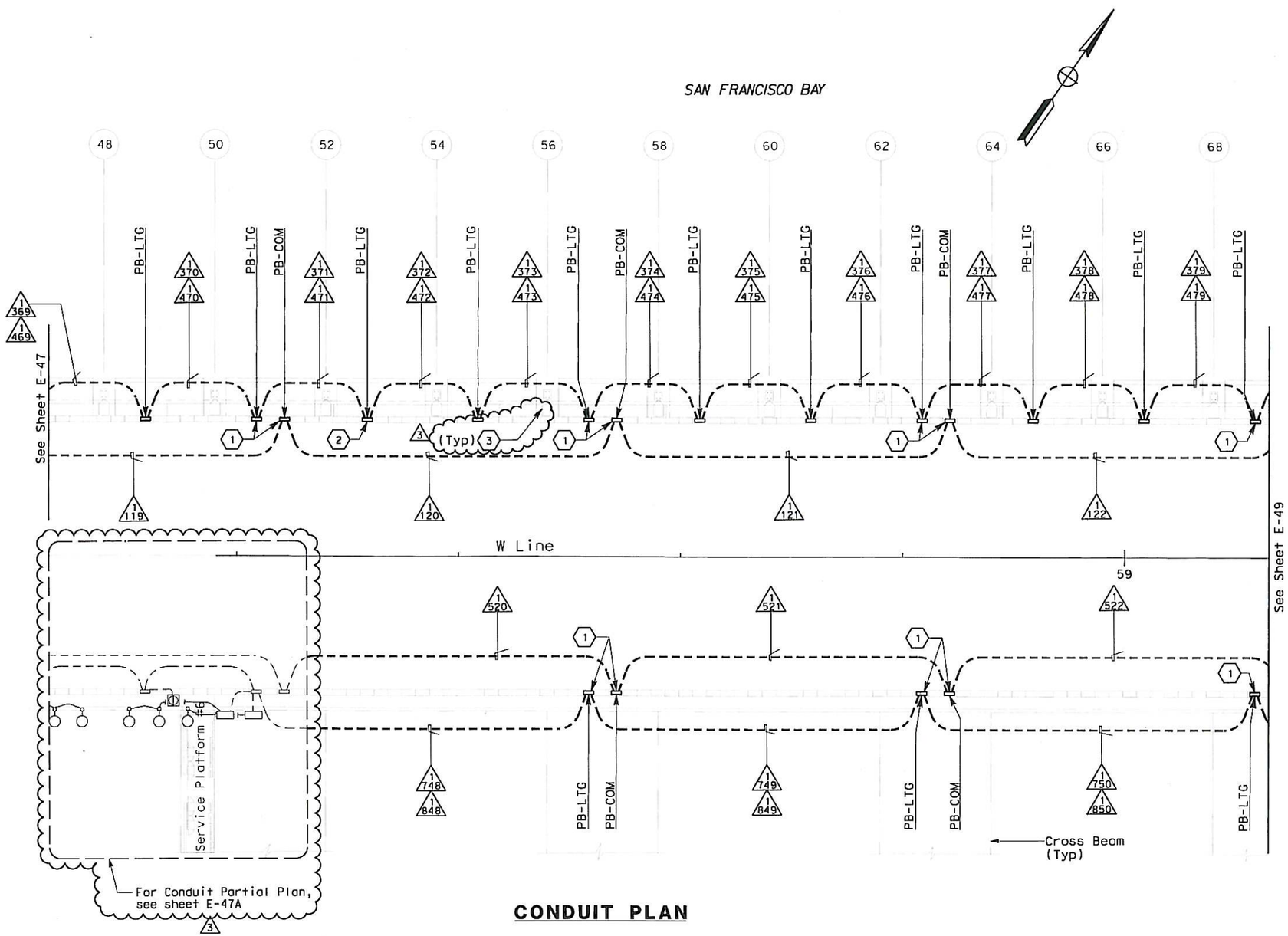

CONDUIT PLAN

SHEET NOTES:

(1) Conduit from barrier pullbox or other equipment down into Girder, See sheet E-98.

(2) For conduit to Suspend Lighting, see sheet E-228. Typ for all PB-LTG located on the north side of the roadway.

(3) See sheet E-67B for Suspender Uplight conduit location.

(4) DELETED

(5) DELETED

NOTES:

1. References:
   - For typical details and locations of conduit connections to light poles, barrier outlet boxes, call boxes, overhead sign lighting, CCTV and MVDS, see sheets E-66, E-67 and E-68.
   - TOS equipment is shown for conduit routing only. For typical details of TOS controller and devices, see sheets E-344 through E-357.
   - For types of pullboxes, splice boxes and enclosures, see sheet E-83.
   - For circuit and conduit/cable tray schedules, see sheets starting at E-401.
2. For Roadway Level Light Pole Schedule, see sheet E-82.
3. For number of lighting fixtures (main tower lights), see lighting schedule sheets E-271 and E-272.

REGISTERED PROFESSIONAL ENGINEER MAXWELL FUNTO TAKAKI No. E 8651 Exp. 9/30/2008 ELECTRICAL STATE OF CALIFORNIA

FOR REVISION ONLY (1)

REGISTERED PROFESSIONAL ENGINEER FADI WALIEDDINE No. 11465 Exp. 12/31/2009 ELECTRICAL STATE OF CALIFORNIA

FOR REVISION ONLY (2)

REGISTERED PROFESSIONAL ENGINEER DAVID H. OTO No. 10699 Exp. 06/30/2013 ELECTRICAL STATE OF CALIFORNIA

FOR REVISION ONLY

REQUEST FOR INFORMATION NOT ADDRESSED IN THIS CCO REMAIN IN FORCE

MARK	DATE	DESCRIPTIONS	BY	CH'D	CCO#
3	11/16/12	ROADWAY LEVEL LED FIXTURE DETAILS	RR	RG	252
2	10/10/08	LIGHTING REVISIONS	RY AG	RG FW	43
1	02/19/08	ELECTRICAL MODIFICATIONS	MP EL	RR	42

REVISIONS

CONTRACT CHANGE ORDER NO. 252
SHEET 4 OF 44

SAS SUPERSTRUCTURE ROADWAY WESTBOUND
LIGHTING AND ELECTRICAL SYSTEMS
SCALE 1:200

E-48

THIS PLAN IS ACCURATE FOR ELECTRICAL WORK ONLY.

STATE OF CALIFORNIA - DEPARTMENT OF TRANSPORTATION
Caltrans

DESIGN OVERSIGHT: BEHZAD GOLEMOHAMMADI

CALCULATED/DESIGNED BY: FK — DATE 8/02 — REVISED BY
CHECKED BY: IAH — 8/02 — DATE REVISED

LAST REVISION 00-00-00 — DATE PLOTTED => 6/26/2013 TIME PLOTTED => 10:01:07 AM

FOR REDUCED PLANS ORIGINAL SCALE IS IN MILLIMETERS 0 20 40 60 80

DGN FILE =>04-0120f1_0119R03.dgn
USERNAME =>Melsheimer

CU 04251 | EA 0120F1

DIST	COUNTY	ROUTE	KILOMETER POST TOTAL PROJECT	SHEET No	TOTAL SHEETS
04	SF	80	13.2/13.9	121 R3	1204

REGISTERED ELECTRICAL ENGINEER 12/19/02 DATE

12-6-04
PLANS APPROVAL DATE

REGISTERED PROFESSIONAL ENGINEER JENS ERLINGSSON No. 8249 Exp. 9/30/06 ELECTRICAL STATE OF CALIFORNIA

PB POWER, Inc.
A Parsons Brinckerhoff Company
303 Second St., Suite 700N
San Francisco, CA 94107-1317

The State of California or its officers or agents shall not be responsible for the accuracy or completeness of electronic copies of this plan sheet.

Caltrans now has a web site! To get to the web site, go to http://www.dot.ca.gov

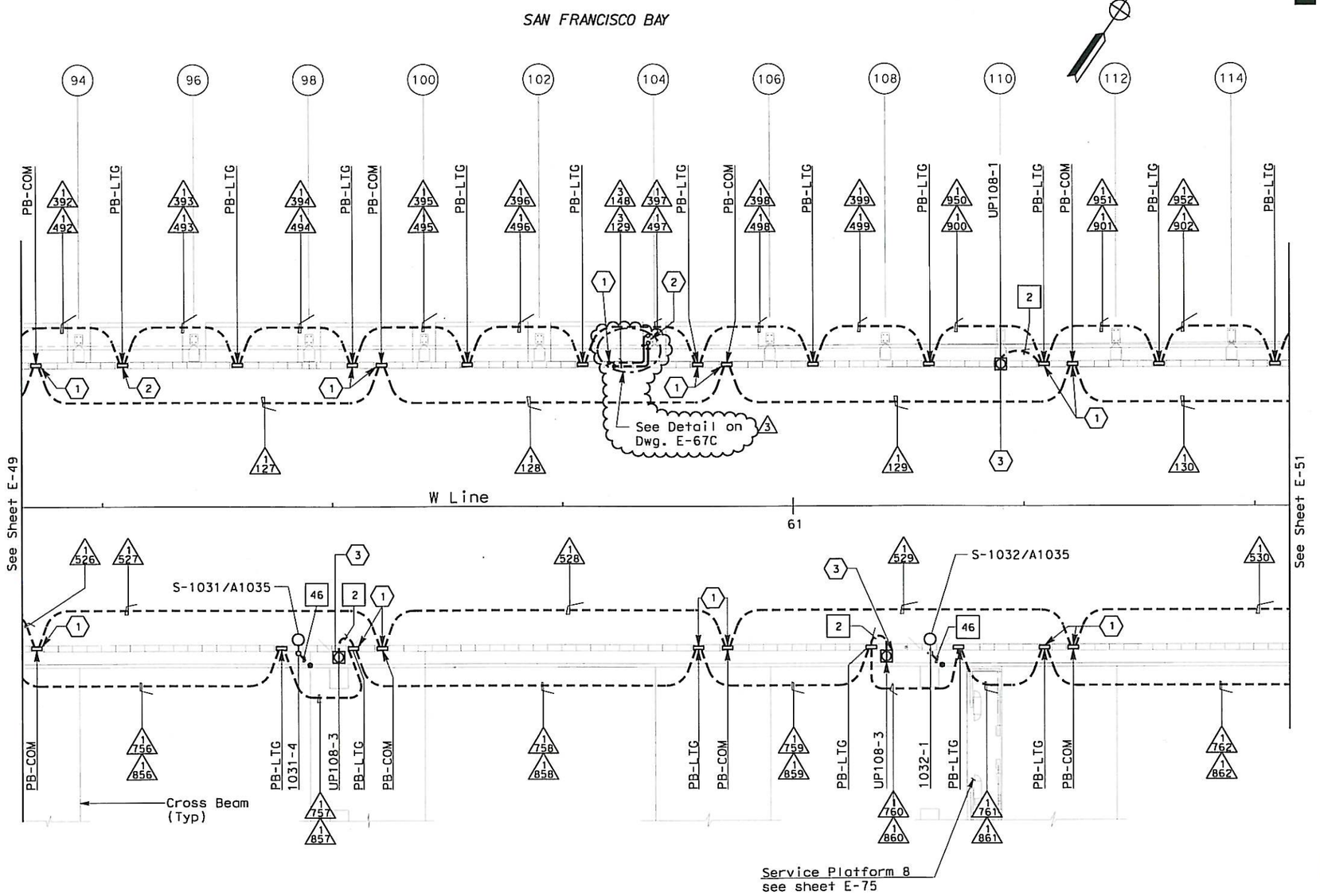

SHEET NOTES:

1. Conduit from barrier pullbox or other equipment down into Girder, See sheet E-100.
2. For conduit to Suspend Lighting, See sheet E-230.
3. Roadway Barrier Receptacle, see Detail 1, sheet E-68.

NOTES:

1. References:
   - For typical details and locations of conduit connections to light poles, barrier outlet boxes, call boxes, overhead sign lighting, CCTV and MVDS, see sheets E-66, E-67 and E-68.
   - TOS equipment is shown for conduit routing only. For typical details of TOS controller and devices, see sheets E-344 through E-357.
   - For types of pullboxes, splice boxes and enclosures, see sheet E-83.
   - For circuit and conduit/cable tray schedules, see sheets starting at E-401.
2. For Roadway Call Boxes refer to sheet E-396.
3. For Roadway Level Lighting Pole Schedules, see sheet E-82.
4. For Roadway Level Call Box Schedule, see sheet E-397.
5. For number of lighting fixtures (main tower lights), see lighting schedule sheets E-271 and E-272.

REQUEST FOR INFORMATION NOT ADDRESSED IN THIS CCO REMAIN IN FORCE

MARK	DATE	DESCRIPTIONS	BY	CH'D	CCO#
3	11/16/12	ROADWAY LEVEL LED FIXTURE DETAILS	RR	RG	252
2	03/04/08	BARRIER MODIFICATIONS	JS BM	RG SE	44
1	02/19/08	ELECTRICAL MODIFICATIONS	MP EL	RR	42

REVISIONS

CONTRACT CHANGE ORDER NO. 252
SHEET 5 OF 44

CONDUIT PLAN

REGISTERED PROFESSIONAL ENGINEER DAVID H. OTO No. 10699 Exp. 06/30/2013 ELECTRICAL STATE OF CALIFORNIA 3
FOR REVISION ONLY

REGISTERED PROFESSIONAL ENGINEER S. A. ESTOQUE, JR. No. E-10151 Exp. 12/31/2008 ELECTRICAL STATE OF CALIFORNIA 3
FOR REVISION ONLY

SAS SUPERSTRUCTURE ROADWAY WESTBOUND
LIGHTING AND ELECTRICAL SYSTEMS
SCALE 1:200

E-50

THIS PLAN IS ACCURATE FOR ELECTRICAL WORK ONLY.

STATE OF CALIFORNIA - DEPARTMENT OF TRANSPORTATION
Caltrans

DESIGN OVERSIGHT: BEHZAD GOLEMOHAMMADI
CALCULATED/DESIGNED BY: FK DATE 8/02 REVISED BY
CHECKED BY: IAH 8/02 DATE REVISED

LAST REVISION 11-16-12
DATE PLOTTED => 6/26/2013
TIME PLOTTED => 10:02:00 AM

FOR REDUCED PLANS ORIGINAL SCALE IS IN MILLIMETERS 0 20 40 60 80
DGN FILE =>04-0120f1_0121R03.dgn
USERNAME =>Melsheimer
CU 04251
EA 0120F1

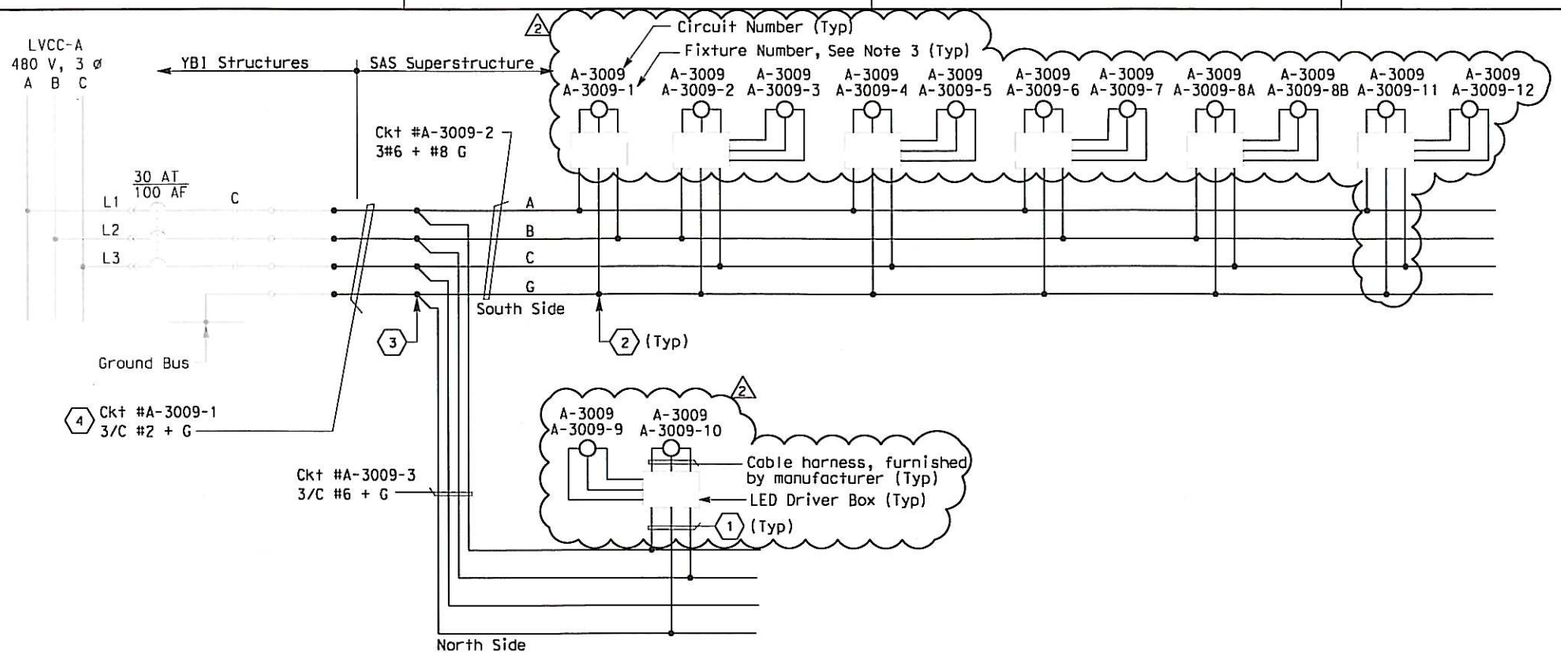

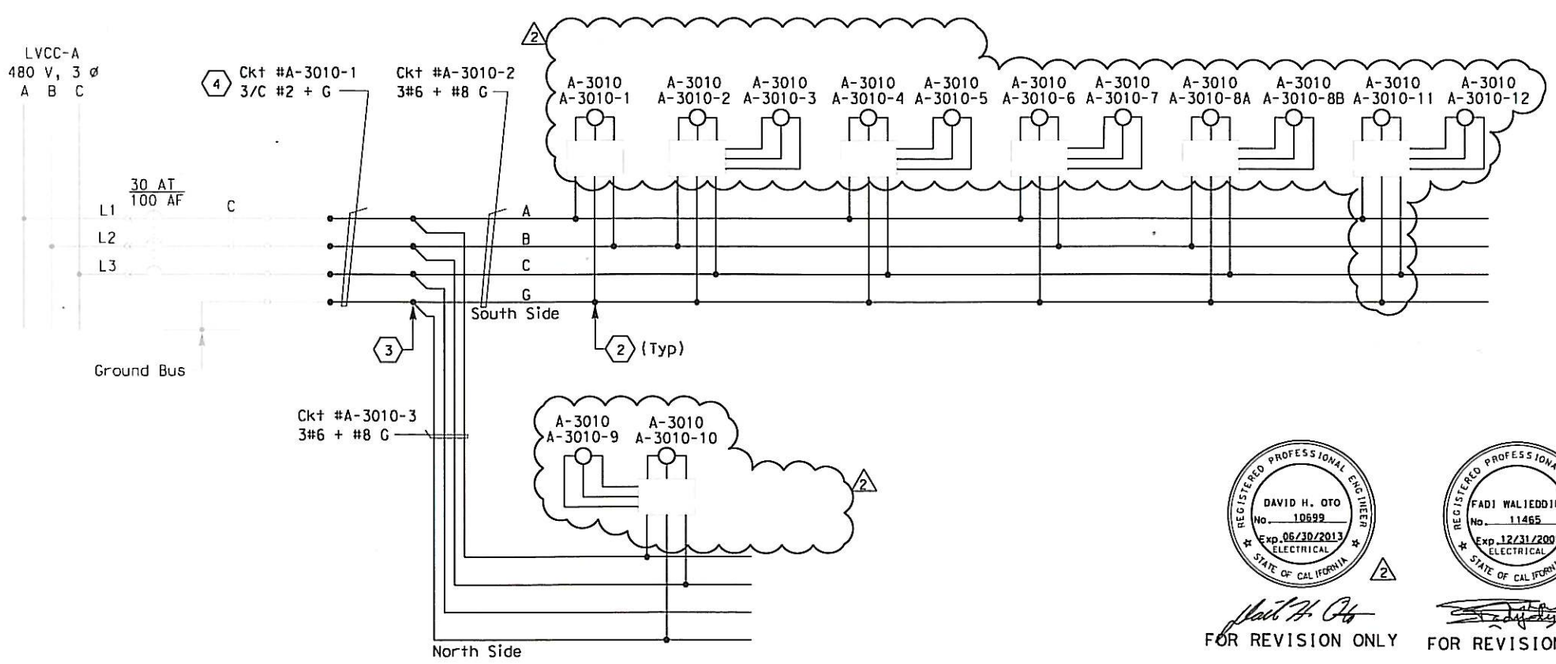

480 V MAIN TOWER LIGHTING

DIST	COUNTY	ROUTE	KILOMETER POST TOTAL PROJECT	SHEET No	TOTAL SHEETS
04	SF	80	13.2/13.9	125 R2	1204

REGISTERED ELECTRICAL ENGINEER 12/19/02 DATE

12-6-04
PLANS APPROVAL DATE

REGISTERED PROFESSIONAL ENGINEER JENS ERLINGSSON No. 8249 Exp. 9/30/06 ELECTRICAL STATE OF CALIFORNIA

PB POWER, Inc.
A Parsons Brinckerhoff Company
303 Second St., Suite 700N
San Francisco, CA 94107-1317

The State of California or its officers or agents shall not be responsible for the accuracy or completeness of electronic copies of this plan sheet.

Caltrans now has a web site! To get to the web site, go to http://www.dot.ca.gov

SHEET NOTES:

1. 2#10 + #10 G single conductors
2. Conductors spliced inside pull box PB-1 TG.
3. Conductors spliced inside junction box PB-2A located inside girder.
4. The Contractor shall extend and coil 5 meters of cable in manhole 25. All cables shall be tagged with circuit numbers as shown. For location of manhole 25, see sheet E-11.
5. Deleted.

NOTES:

1. Use multi-conductor cable if circuit is routed via trays.
2. References:
   - For typical pull box schedule, see sheet E-83.
   - For circuit and conduit/cable tray schedules, see sheets starting at E-401.
3. For lighting fixtures schedule see sheet E-82.

REGISTERED PROFESSIONAL ENGINEER DAVID H. OTO No. 10699 Exp. 06/30/2013 ELECTRICAL STATE OF CALIFORNIA

FOR REVISION ONLY

REGISTERED PROFESSIONAL ENGINEER FADI WALIEDDINE No. 11465 Exp. 12/31/2009 ELECTRICAL STATE OF CALIFORNIA

FOR REVISION ONLY

REQUEST FOR INFORMATION NOT ADDRESSED IN THIS CCO REMAIN IN FORCE

MARK	DATE	DESCRIPTIONS	BY	CH'D	CCO#
2	11/16/12	ROADWAY LEVEL LED FIXTURE DETAILS	RSB	RG	252
1	10/10/08	LIGHTING REVISIONS	RY AG	RG FW	43

REVISIONS

CONTRACT CHANGE ORDER NO. 252
SHEET 6 OF 44

DETAILS
SAS SUPERSTRUCTURE ROADWAY WESTBOUND
480 V ROADWAY LIGHTING WIRING DIAGRAM
NO SCALE

E-56

DATE	REVISED BY	DATE REVISED
8/01	JP	11/01 JE

CALCULATED/DESIGNED BY JP
CHECKED BY JE

DESIGN OVERSIGHT
BEHZAD GOLEMOHAMMADI

STATE OF CALIFORNIA - DEPARTMENT OF TRANSPORTATION
Caltrans

LAST REVISION 11-16-12
DATE PLOTTED => 11/16/2012
TIME PLOTTED => 5:46:36 PM

FOR REDUCED PLANS ORIGINAL SCALE IS IN MILLIMETERS 0 20 40 60 80
DGN FILE =>04-0120f1_0125R02.dgn
USERNAME =>Melsheimer
CU 04251
EA 0120F1

DIST	COUNTY	ROUTE	KILOMETER POST TOTAL PROJECT	SHEET No	TOTAL SHEETS
04	SF	80	13.2/13.9	131 S1R2	1208

REGISTERED ELECTRICAL ENGINEER 9/18/07 DATE

PLANS APPROVAL DATE

REGISTERED PROFESSIONAL ENGINEER MARCELL FLAVIO TARAZI No. E 8651 Exp. 9/30/2008 ELECTRICAL STATE OF CALIFORNIA

PB AMERICAS, Inc.
A Parsons Brinckerhoff Company
303 Second St., Suite 700N
San Francisco, CA 94107-1317

The State of California or its officers or agents shall not be responsible for the accuracy or completeness of electronic copies of this plan sheet.

Caltrans now has a web site! To get to the web site, go to http://www.dot.ca.gov

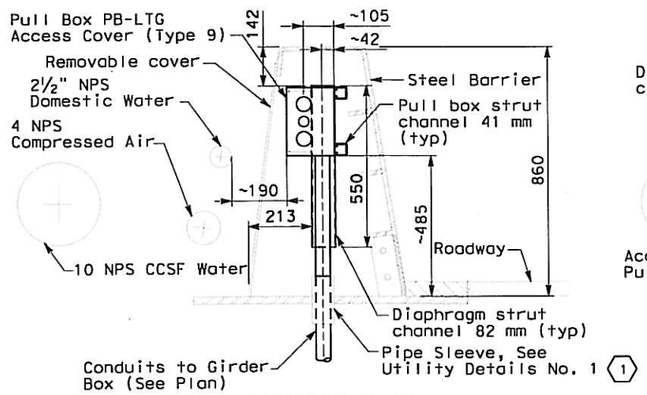

SECTION B-B

TYPICAL PULL BOX PB-LTG AND CONDUIT LOCATION (W5) (W2) (SIMILAR)
SCALE 1:10

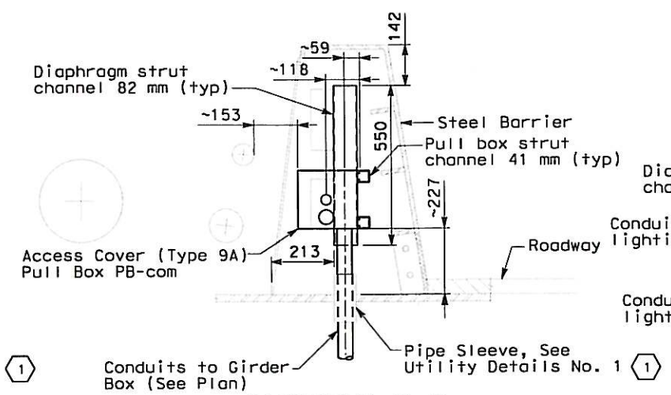

SECTION C-C

TYPICAL PULL BOX PB-COM AND CONDUIT LOCATION (W5) (W2) (SIMILAR)
SCALE 1:10

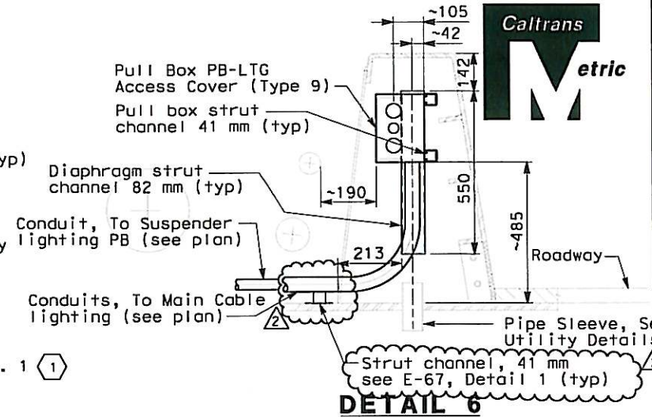

DETAIL 6

TYPICAL CONDUIT LOCATION FROM PULL BOX PB-LTG TO SUSPENDER AND MAIN CABLE LIGHTING (W5) (W2) (SIMILAR)
SCALE 1:10

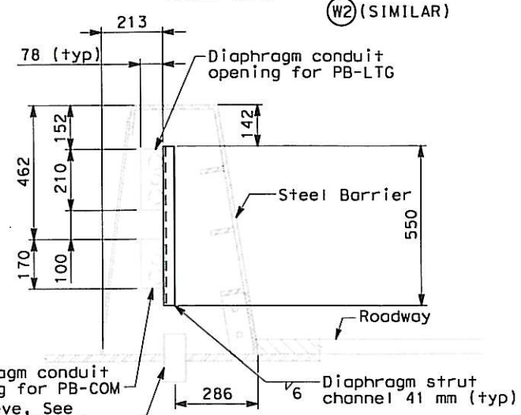

DETAIL 1

TYPICAL CONDUIT SUPPORT THROUGH DIAPHRAGM (W5)
SCALE 1:10

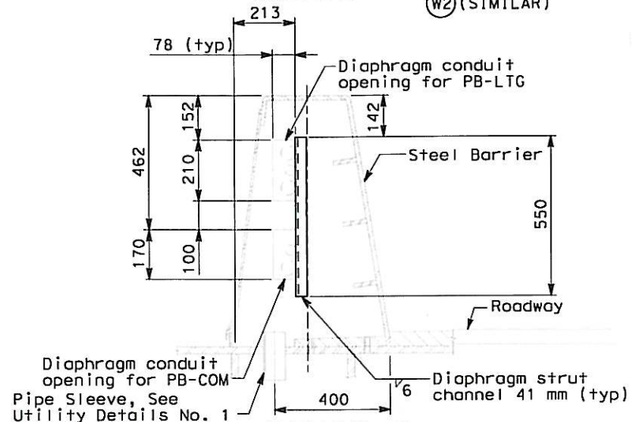

DETAIL 2

TYPICAL CONDUIT SUPPORT THROUGH DIAPHRAGM (W2)
SCALE 1:10

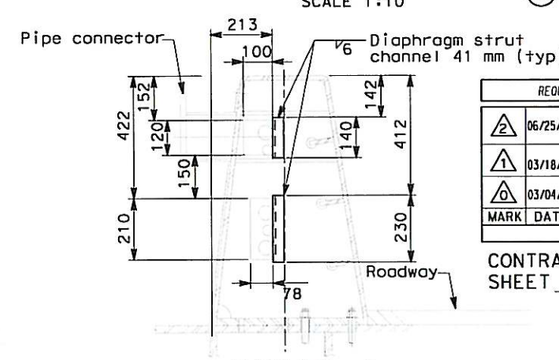

DETAIL 3

AT BARRIER WITH MOUNTED SIGNS
CONDUIT SUPPORT DIAPHRAGM W2 (PP44 + 2.150)
CONDUIT SUPPORT DIAPHRAGM W5 (PP44 + 2.150)
SCALE 1:10

REQUEST FOR INFORMATION NOT ADDRESSED IN THIS CCO REMAIN IN FORCE					
2	06/25/13	ROADWAY LEVEL LED FIXTURE DETAILS	TH	AM	252
1	03/18/10	WEST END BARRIER CONDUIT	TW	RG DO	44S1
0	03/04/08	BARRIER MODIFICATIONS	EL	RG SE	44
MARK	DATE	DESCRIPTIONS	BY	CH'D	CCO#
		REVISIONS			

CONTRACT CHANGE ORDER NO. 252
SHEET 7 OF 44

REGISTERED PROFESSIONAL ENGINEER (1) DAVID H. OTO No. 10699 Exp. 06/30/2011 ELECTRICAL STATE OF CALIFORNIA
FOR REVISION ONLY

REGISTERED PROFESSIONAL ENGINEER (2) SAFIUDDIN A. MOHAMMED No. 71894 CIVIL STATE OF CALIFORNIA
FOR REVISION ONLY

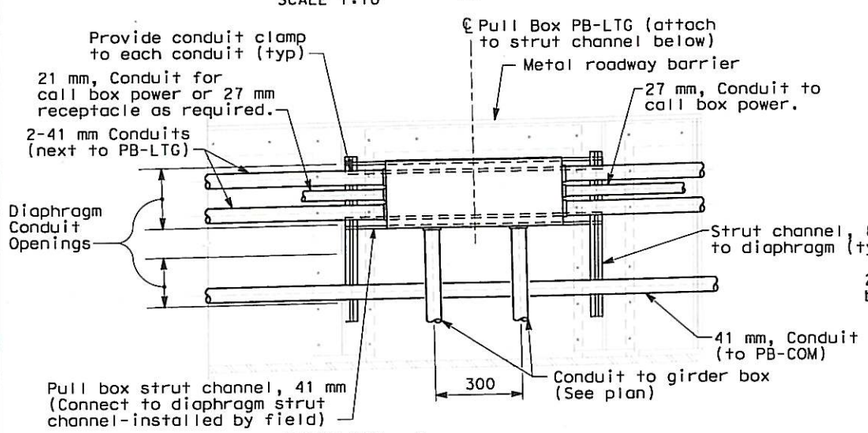

DETAIL 4

TYPICAL CONDUIT SUPPORT PULL BOX PB-LTG MOUNTING
SCALE 1:10

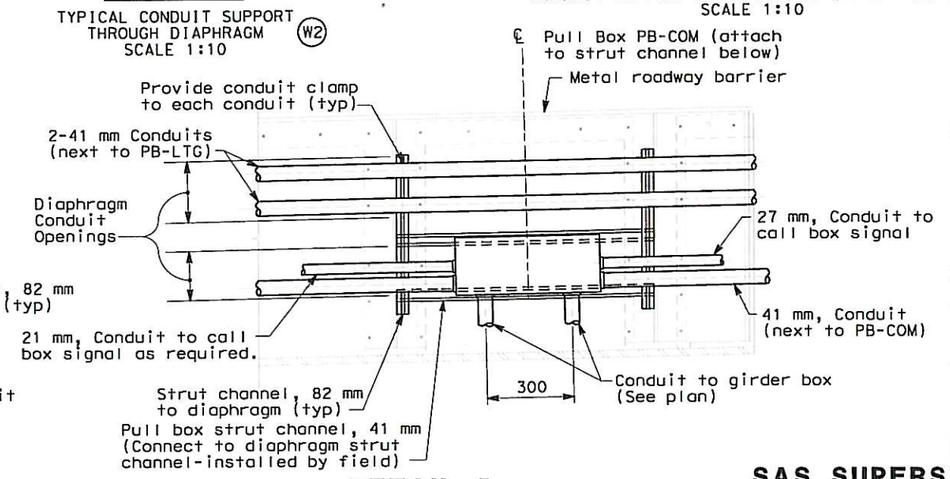

DETAIL 5

TYPICAL CONDUIT SUPPORT PULL BOX PB-COM MOUNTING
SCALE 1:10

NOTES:

1. References:
   - For pull box schedule, see Sheet E-83.
   - For barrier details, see structural drawings.
2. For location of pull boxes inside girder, see Sheet E-96 through E-101.

SHEET NOTES:

(1) To prevent moisture from passing inside the sleeve, the Contractor shall install sealant between the sleeve and conduit.

(2) Spare pipe sleeves shall be capped on both ends.

DETAILS
SAS SUPERSTRUCTURE ROADWAY CONDUIT AND PULL BOX LOCATIONS

SCALE AS NOTED

E-66A

THIS PLAN IS ACCURATE FOR ELECTRICAL WORK ONLY.

ALL DIMENSIONS ARE IN MILLIMETERS UNLESS OTHERWISE SHOWN.

FOR REDUCED PLANS ORIGINAL SCALE IS IN MILLIMETERS 0 20 40 60 80

DGN FILE =>04-0120f1_0131S01R02.dgn
USERNAME =>Welsheimer

CU 04251 | EA 0120F1

LAST REVISION 06-25-13 | DATE PLOTTED => 6/26/2013 | TIME PLOTTED => 10:05:49 AM

REVISED BY	DATE REVISED		
DATE 11/02	DATE 11/02		
CALCULATED/DESIGNED BY FK	CHECKED BY IAH		
DESIGN OVERSIGHT BEHZAD GOLEMOHAMMADI			

STATE OF CALIFORNIA - DEPARTMENT OF TRANSPORTATION
Caltrans

DIST	COUNTY	ROUTE	KILOMETER POST TOTAL PROJECT	SHEET No	TOTAL SHEETS
04	SF	80	13.2/13.9	131 S2R2	1204

REGISTERED ELECTRICAL ENGINEER DATE 06/25/09

PLANS APPROVAL DATE

REGISTERED PROFESSIONAL ENGINEER FADI WALIEDDINE No. 11465 Exp. 12/31/2009 ELECTRICAL STATE OF CALIFORNIA

PB AMERICAS, Inc.
A Parsons Brinckerhoff Company
303 Second St., Suite 700N
San Francisco, CA 94107-1317

The State of California or its officers or agents shall not be responsible for the accuracy or completeness of electronic copies of this plan sheet.

Caltrans now has a web site! To get to the web site, go to http://www.dot.ca.gov

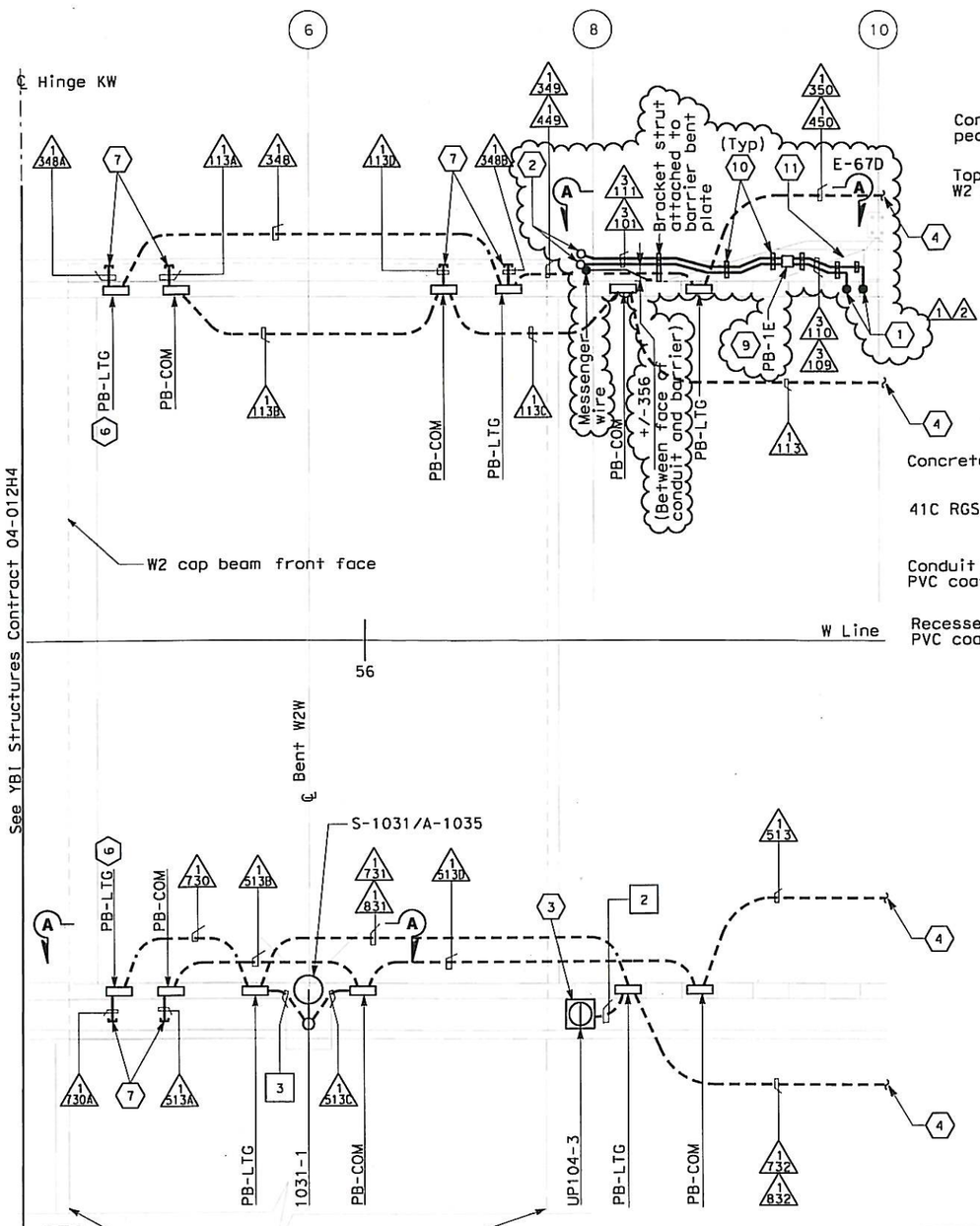

CONDUIT PLAN
SCALE: 1:100

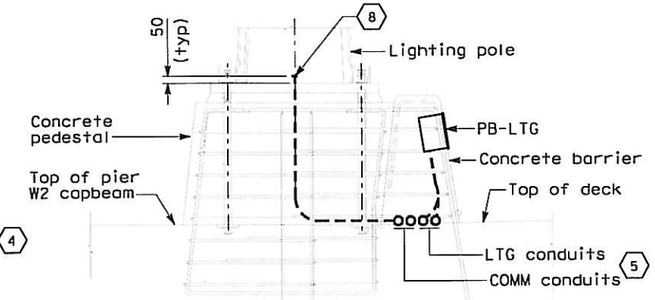

SECTION D-D
NO SCALE

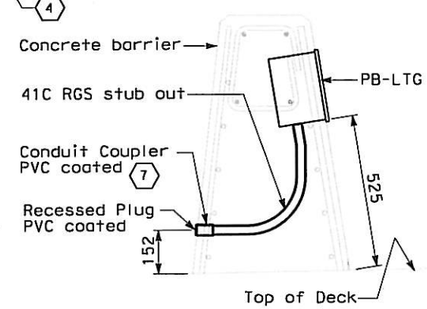

SECTION B-B
NO SCALE
Typical for PB-LTG in concrete barrier.

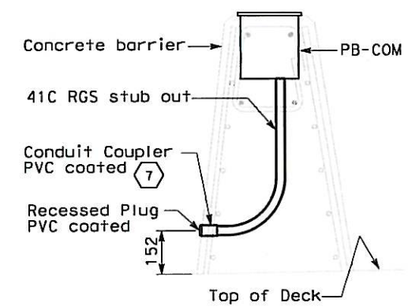

SECTION C-C
NO SCALE
Typical for PB-COM in concrete barrier.

SHEET NOTES:

1. Conduit from barrier pullbox or other equipment down into Girder, see sheet E-96.
2. For conduit to Suspend Lighting, see sheet E-226. Typ for all PB-LTG located on the north side of the roadway.
3. Roadway Barrier Receptacle, see Detail 1, sheet E-68.
4. See drawing E-46 for continuation of conduits.
5. Conduit arrangement may be adjusted to suit field condition.
6. Contractor shall verify dimension and locate PB-LTG with sufficient distance to accommodate required clearance for the expansion joint.
7. Stub-out conduits are furnished and installed by Contractor. Conduit shall stub-out at the non-roadway side of the barrier with the coupler flushed to the barrier face wall and provided with plug.
8. Capped end of conduit stub-ups.
9. Locate pull box clear of all mechanical piping and any other obstructions. Contractor to maintain 51 mm clearance between conduits and cable railing post base.
10. Attach conduit support to OBG deck, see Detail 1 sheet E-67.
11. Route conduit over diverter plate. Conduit shall be suported to allow 13mm minimum clearance between conduits and top of diverter plate.

NOTES:

1. For general notes, see E-46.

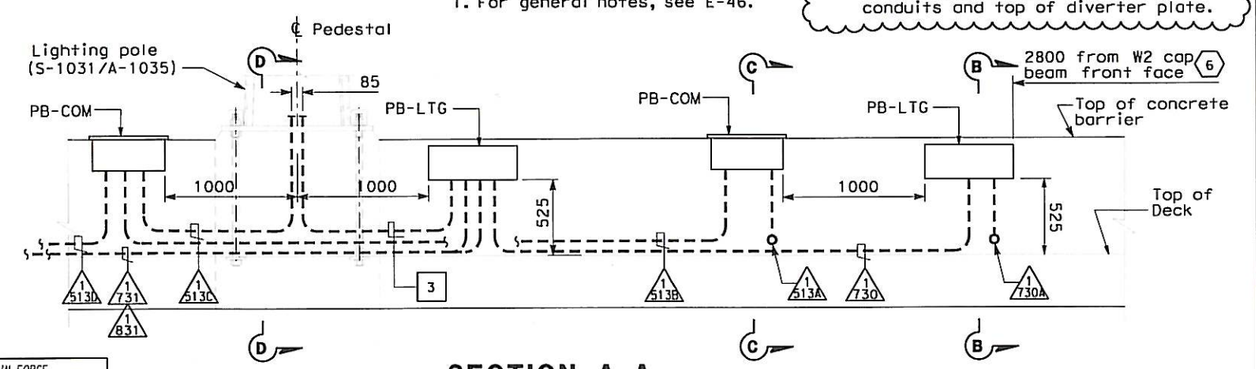

SECTION A-A
NO SCALE
Similar for installation of PB-LTG and PB-COM on north side concrete barrier.
Conduit routing varies, see conduit plan.

REQUEST FOR INFORMATION NOT ADDRESSED IN THIS CCO REMAIN IN FORCE					
2	06/25/13	ROADWAY LEVEL LED FIXTURE DETAILS	RR	RG	252
1	11/16/12	ROADWAY LEVEL LED FIXTURE DETAILS	RR	RG	252
0	06/25/09	WEST END BARRIER CONDUIT	RG	FW	44S1
MARK	DATE	DESCRIPTIONS	BY	CH'D	CCO#
		REVISIONS			

CONTRACT CHANGE ORDER NO. 252
SHEET 8 OF 44

FOR REVISION ONLY

DETAILS
SAS SUPERSTRUCTURE ROADWAY WESTBOUND CONDUIT AND PULL BOX LOCATIONS
SCALE AS NOTED

E-66B

STATE OF CALIFORNIA - DEPARTMENT OF TRANSPORTATION
Caltrans

DESIGN OVERSIGHT: BEHZAD GOLEMOHAMMADI
CALCULATED/DESIGNED BY: RG DATE 6-09 REVISED BY
CHECKED BY: FW 6-09 DATE REVISED

LAST REVISION 06-25-13
DATE PLOTTED => 6/26/2013
TIME PLOTTED => 10:06:29 AM

FOR REDUCED PLANS ORIGINAL SCALE IS IN MILLIMETERS 0 20 40 60 80

DGN FILE =>04-0120f1_0131S02R02.dgn
USERNAME =>Melsheimer

CU 04251 EA 0120F1

DIST	COUNTY	ROUTE	KILOMETER POST TOTAL PROJECT	SHEET No	TOTAL SHEETS
04	SF	80	13.2/13.9	132 R6	1208

REGISTERED ELECTRICAL ENGINEER 12/19/02 DATE

12-6-04
PLANS APPROVAL DATE

REGISTERED PROFESSIONAL ENGINEER JENS ERLINGSSON No. 8249 Exp. 9/30/06 ELECTRICAL STATE OF CALIFORNIA

PB POWER, Inc.
A Parsons Brinckerhoff Company
303 Second St., Suite 700N
San Francisco, CA 94107-1317

The State of California or its officers or agents shall not be responsible for the accuracy or completeness of electronic copies of this plan sheet.

Caltrans now has a web site! To get to the web site, go to http://www.dot.ca.gov

Caltrans Metric

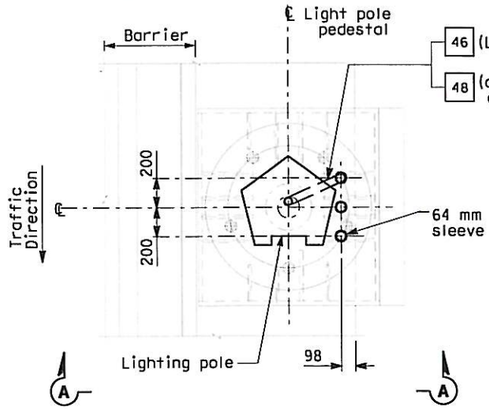

PLAN

CONDUIT STUB-UP PLAN FOR ROADWAY LIGHTING ON A METAL BASE
(SIMILAR FOR OVERHEAD SIGN ON A METAL BASE EXCEPT AS NOTED)
SCALE 1:20

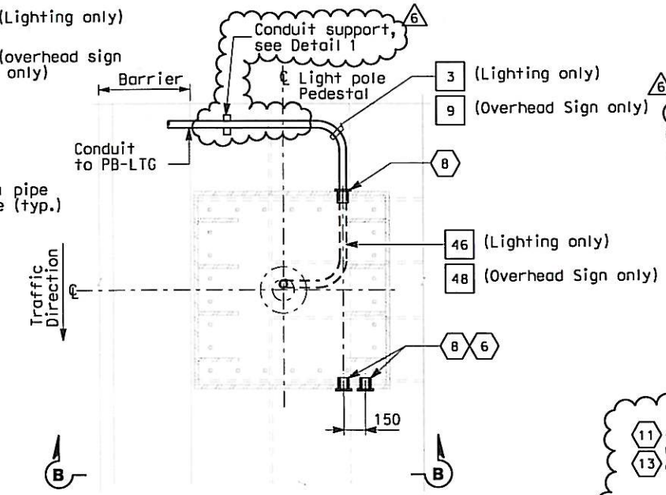

PLAN

CONDUIT STUB-UP PLAN FOR ROADWAY LIGHTING ON A METAL BASE AT PIER E2 ONLY
(SIMILAR FOR OVERHEAD SIGN ON METAL BASE LOCATED AT PP121)
SCALE 1:20

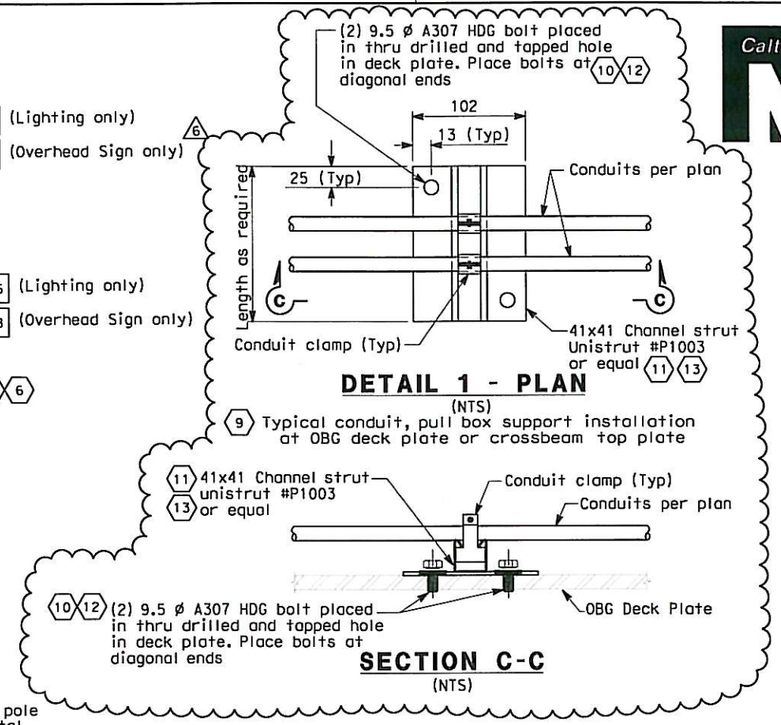

DETAIL 1 - PLAN

(NTS)

9 Typical conduit, pull box support installation at OBG deck plate or crossbeam top plate

SECTION C-C

(NTS)

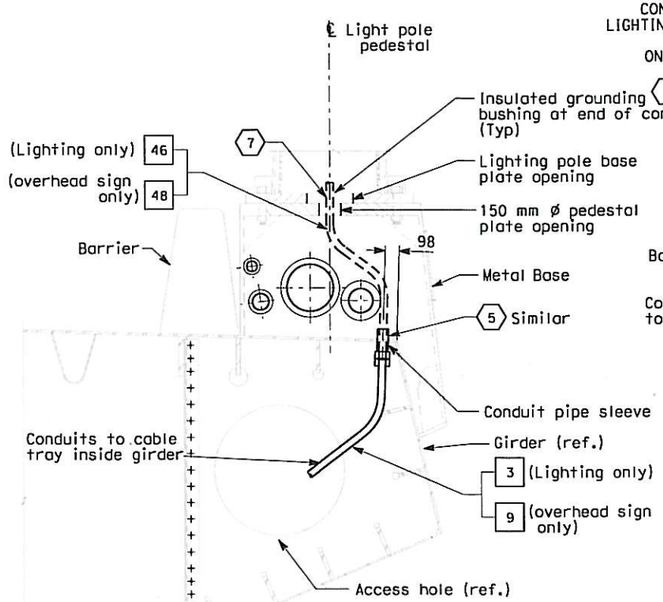

SECTION A-A

LIGHT POLE METAL PEDESTAL
CONDUIT TYPICAL INSTALLATION
SCALE 1:20

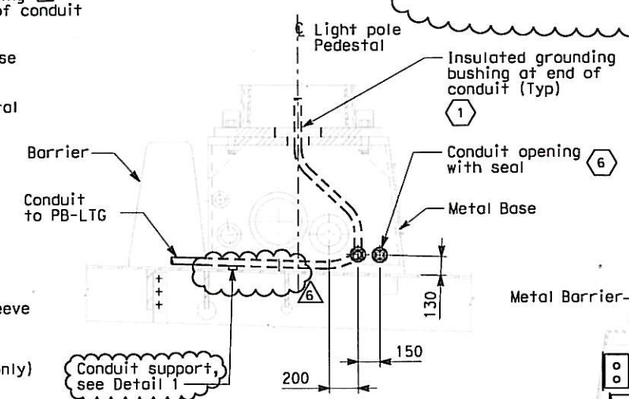

SECTION B-B

SCALE 1:20

NOTES:

1. References:
   - For lighting pole schedule, see sheet E-82.
   - For location of pull boxes inside girder, see sheets E-96 thru E-101.
   - For luminaire support details, see structural sheets.
   - For pull box schedule, see sheet E-83.
2. Roadway Barrier Receptacle, see Detail 1, sheet E-68.
3. For conduit and pull box details in steel barrier, see drawings E-66 and E-66A.
4. 6 Conduit support spacing shall be as noted in the contract plan sheets.

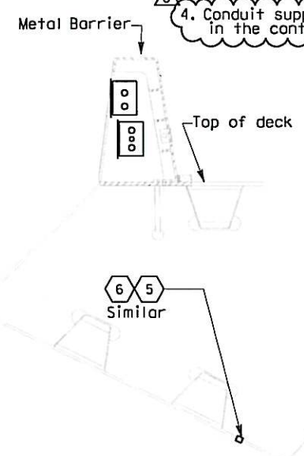

DETAIL 3

CONDUIT FOR FUTURE LIGHTPIPE CONNECTIONS ON A STEEL STRUCTURE
SCALE: 1:20

REGISTERED PROFESSIONAL ENGINEER SAFIUDDIN A. MOHAMMED No. 71694 CIVIL STATE OF CALIFORNIA 6

FOR REVISION ONLY

SHEET NOTES:

1. Bond grounding bushing to ground lug of lighting pole with #6 bare copper wire.
2. Conduits for future light pipe shall continue from this pull box.
3. Deleted.
4. Deleted.
5. See Utility Detail No. 1 (Sheet No. 965 of 1204) for conduit penetration through girder plate and lighting pole metal base. The Contractor shall install sealant between the sleeve and conduit to prevent water or moisture from passing inside the sleeve.
6. Plug spare penetrations for future use where noted. Contractor shall use Roxtec Seal #HO-(60/66)/0/60 AISI 316 (Part #5H0000007383) or equal.
7. Ensure that the maximum of three conduits passing through the 150 mm ø pedestal plate opening are separated as much as possible from each other.
8. Contractor to use appropriate conduit opening to suit field condition for conduit routing purposes. Contractor shall use Roxtec RS Seals or equal to seal conduit opn.
9. 6 Channel Struts supporting pull boxes at OBG deck plate/crossbeam top plate shall be attached similar to conduit support channel strut as shown in Detail 1. All channel struts shall be 12Ga nominal thickness.
10. Contractor shall caulk around the perimeter of the channel strut bottom plate and around the bolt heads.
11. All channel struts attached to OBG deck plate/crossbeam top plate shall be hot-dipped galvanized and painted to match the "bridge color".
12. Bolts installed in the OBG deck plate/crossbeam top plate shall clear internal members/stiffners by a minimum distance of 50mm. Bolts shall not be placed within 50mm of the edge of the OBG deck plate/crossbeam top plate.
13. 6 In lieu of Unistrut #P1003 type channel strut, Contractor has an option to use 41x41 channel strut (#P1000, 12 Ga or equal) spot welded to 6.4mm thick x 102 wide plate. Welds shall be located at each end and at 76mm max. on center. The assembly shall be hot-dipped galvanized after fabrication.

REGISTERED PROFESSIONAL ENGINEER DAVID H. OTO No. 10699 Exp. 06/30/2013 ELECTRICAL STATE OF CALIFORNIA 5

FOR REVISION ONLY

REGISTERED PROFESSIONAL ENGINEER FADI WALIEDDINE No. 11465 Exp. 12/31/2009 ELECTRICAL STATE OF CALIFORNIA 4

FOR REVISION ONLY

REGISTERED PROFESSIONAL ENGINEER MANUEL FUNTO TAGAT No. E 8651 Exp. 9/30/2008 ELECTRICAL STATE OF CALIFORNIA 1 2

FOR REVISION ONLY

REGISTERED PROFESSIONAL ENGINEER S. A. ESTOQUE, JR. No. E-10151 Exp. 12/31/2008 ELECTRICAL STATE OF CALIFORNIA 3

FOR REVISION ONLY

THIS PLAN IS ACCURATE FOR ELECTRICAL WORK ONLY.

REQUEST FOR INFORMATION NOT ADDRESSED IN THIS CCO REMAIN IN FORCE

MARK	DATE	DESCRIPTIONS	BY	CH'D	CCO#
6	08/05/13	ROADWAY LEVEL LED FIXTURE DETAILS	TH RR	AM RG	252
5	02/08/13	ADDITIONAL SAS/SKYWAY MISCELLANEOUS ELECTRICAL CHANGES	RR RSB	RG	191S1
4	03/21/08	LIGHTING REVISIONS	RY AG	RG FW	43
3	03/04/08	BARRIER MODIFICATIONS	JS BM	SE RG	44
2	02/19/08	ELECTRICAL MODIFICATIONS	MP EL RG	RR	42
1	10/16/06	REVISED SHEET NOTES	LR	MG	11

REVISIONS

CONTRACT CHANGE ORDER NO. 252
SHEET 9 OF 44

ALL DIMENSIONS ARE IN MILLIMETERS UNLESS OTHERWISE SHOWN.

DETAILS

SAS SUPERSTRUCTURE ROADWAY WESTBOUND CONDUIT LOCATIONS

SCALE AS NOTED

E-67

DATE	REVISED BY	DATE REVISED
10/01	KG	AB 11/01

CALCULATED/DESIGNED BY
CHECKED BY

DESIGN OVERSIGHT
BEHZAD GOLEMOHAMMADI

STATE OF CALIFORNIA - DEPARTMENT OF TRANSPORTATION
Caltrans

LAST REVISION 08-02-13
DATE PLOTTED => 8/5/2013
TIME PLOTTED => 11:44:39 AM

FOR REDUCED PLANS ORIGINAL SCALE IS IN MILLIMETERS 0 20 40 60 80

DGN FILE =>04-0120f1_0132R06.dgn
USERNAME =>Melsheimer

CU 04251 EA 0120F1

DIST	COUNTY	ROUTE	KILOMETER POST TOTAL PROJECT	SHEET No	TOTAL SHEETS
04	SF	80	13.2/13.9	132 S1R2	1208

REGISTERED ELECTRICAL ENGINEER 10/10/08 DATE

PLANS APPROVAL DATE

REGISTERED PROFESSIONAL ENGINEER FADI WALIEDDINE No. 11465 Exp. 12/31/2009 ELECTRICAL STATE OF CALIFORNIA

PB AMERICAS, Inc.
A Parsons Brinckerhoff Company
303 Second St., Suite 700N
San Francisco, CA 94107-1317

The State of California or its officers or agents shall not be responsible for the accuracy or completeness of electronic copies of this plan sheet.

Caltrans now has a web site! To get to the web site, go to http://www.dot.ca.gov

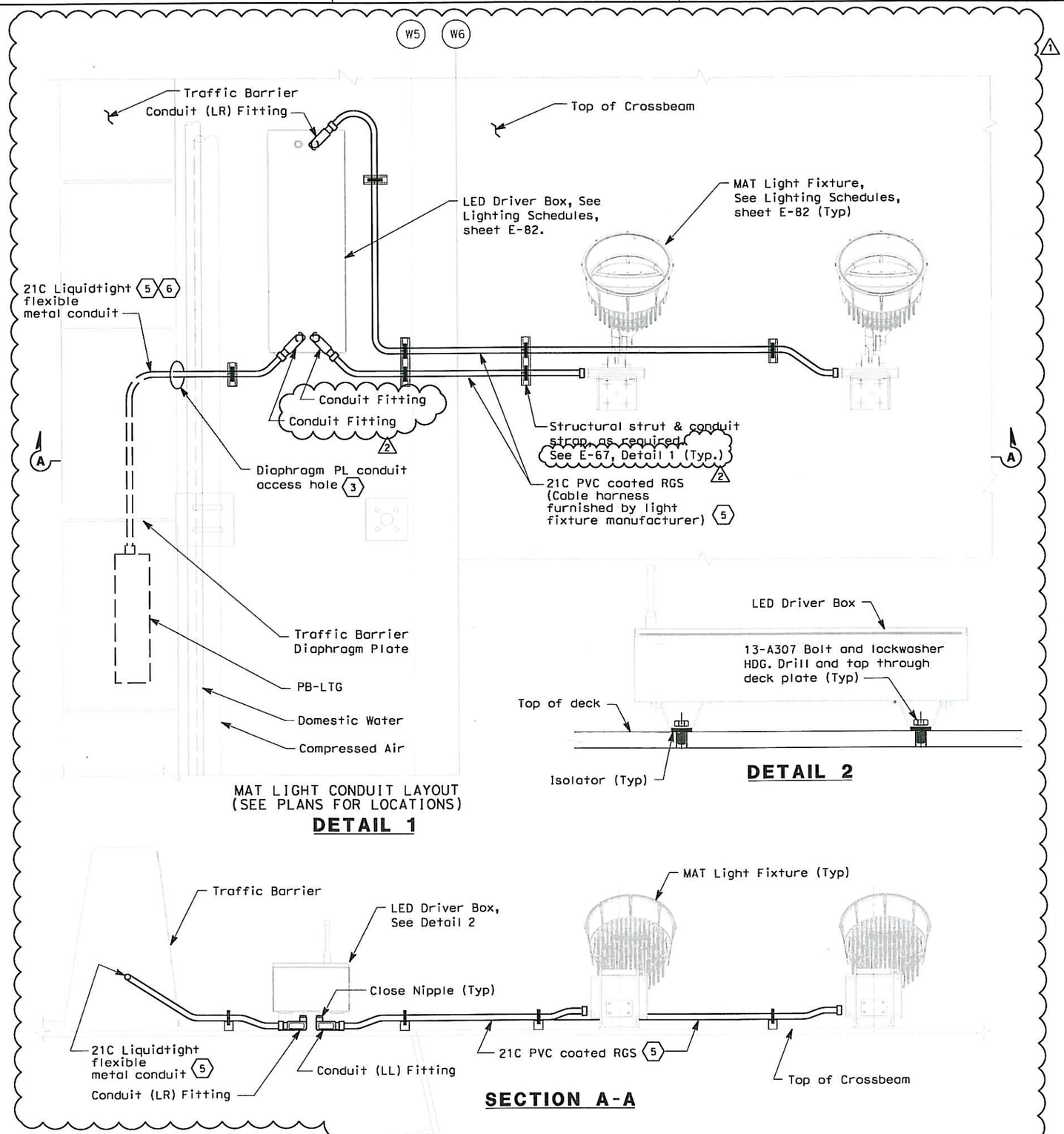

THIS PLAN ACCURATE FOR ELECTRICAL WORK ONLY.

SHEET NOTES:

1. Deleted. 1 2
2. Deleted. 1
3. Conduit access hole per Sheet 472R2, Section A-A, Note 8.
4. Deleted.
5. Routing of conductors and conduits between PB-LTG enclosures, MAT fixtures, and LED driver boxes servicing MAT fixtures shall be determined by Contractor. At Contractor's option, conductors between LED driver boxes and MAT fixtures may be routed through PB-LTG conduits. If this option is exercised, Contractor shall inform Engineer's Field Representative of the as-built routing of these conductors. 1
6. 2#10 + 10G and #10 bare copper wire.

REQUEST FOR INFORMATION NOT ADDRESSED IN THIS CCO REMAIN IN FORCE					
2	08/05/13	ROADWAY LEVEL LED FIXTURE DETAILS	TH	AM	252
1	11/16/12	ROADWAY LEVEL LED FIXTURE DETAILS	RR	RG	252
0	10/10/08	LIGHTING REVISIONS	RY AG	RG FW	43
MARK	DATE	DESCRIPTIONS	BY	CH'D	CCO#
		REVISIONS			

CONTRACT CHANGE ORDER NO. 252
SHEET 10 OF 44

REGISTERED PROFESSIONAL ENGINEER DAVID H. OTO No. 10699 Exp. 06/30/2013 ELECTRICAL STATE OF CALIFORNIA 1
FOR REVISION ONLY

REGISTERED PROFESSIONAL ENGINEER SAFIUDDIN A. MOHAMED No. 71694 CIVIL STATE OF CALIFORNIA 2
FOR REVISION ONLY

DETAILS
SAS SUPERSTRUCTURE ROADWAY WESTBOUND CONDUIT LOCATIONS
SCALE: NONE

E-67A

STATE OF CALIFORNIA - DEPARTMENT OF TRANSPORTATION
Caltrans

DESIGN OVERSIGHT: BEHZAD GOLEMOHAMMADI

CALCULATED/DESIGNED BY | CHECKED BY | DATE REVISED BY | DATE REVISED

LAST REVISION 08-02-13 | DATE PLOTTED => 8/5/2013 | TIME PLOTTED => 11:47:10 AM

FOR REDUCED PLANS ORIGINAL SCALE IS IN MILLIMETERS 0 20 40 60 80

DGN FILE =>04-0120f1_0132S01R02.dgn
USERNAME =>Weisheimer

CU 04251 | EA 0120F1

DIST	COUNTY	ROUTE	KILOMETER POST TOTAL PROJECT	SHEET No	TOTAL SHEETS
04	SF	80	13.2/13.9	132 S2R2	1208

REGISTERED ELECTRICAL ENGINEER DATE 10/10/08

PLANS APPROVAL DATE

REGISTERED PROFESSIONAL ENGINEER FADI WALIEDDINE No. 11465 Exp. 12/31/2009 ELECTRICAL STATE OF CALIFORNIA

PB AMERICAS, Inc.
A Parsons Brinckerhoff Company
303 Second St., Suite 700N
San Francisco, CA 94107-1317

The State of California or its officers or agents shall not be responsible for the accuracy or completeness of electronic copies of this plan sheet.

Caltrans now has a web site! To get to the web site, go to http://www.dot.ca.gov

Caltrans Metric

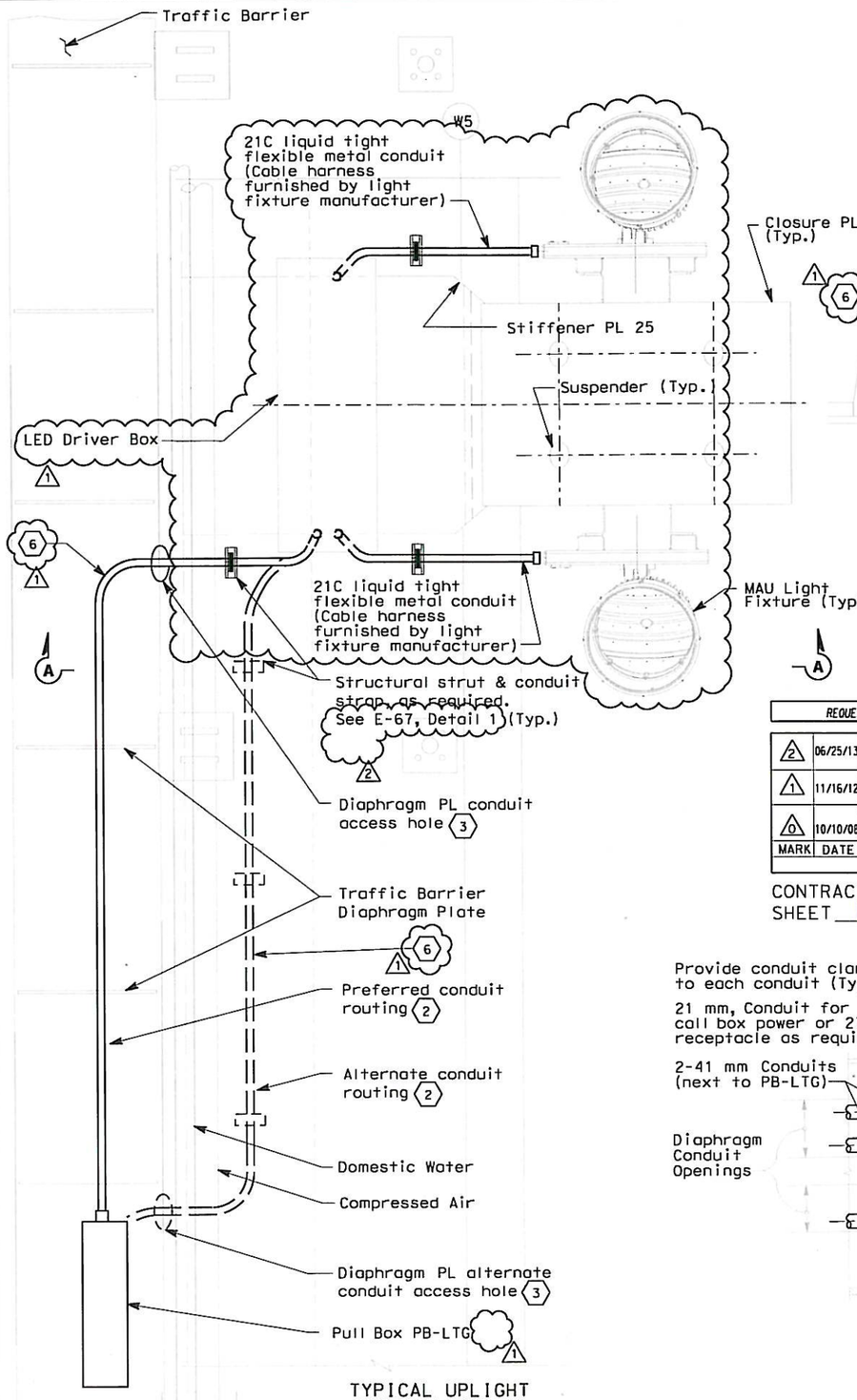

TYPICAL UPLIGHT CONDUIT LAYOUT

DETAIL 1

SCALE 1:20

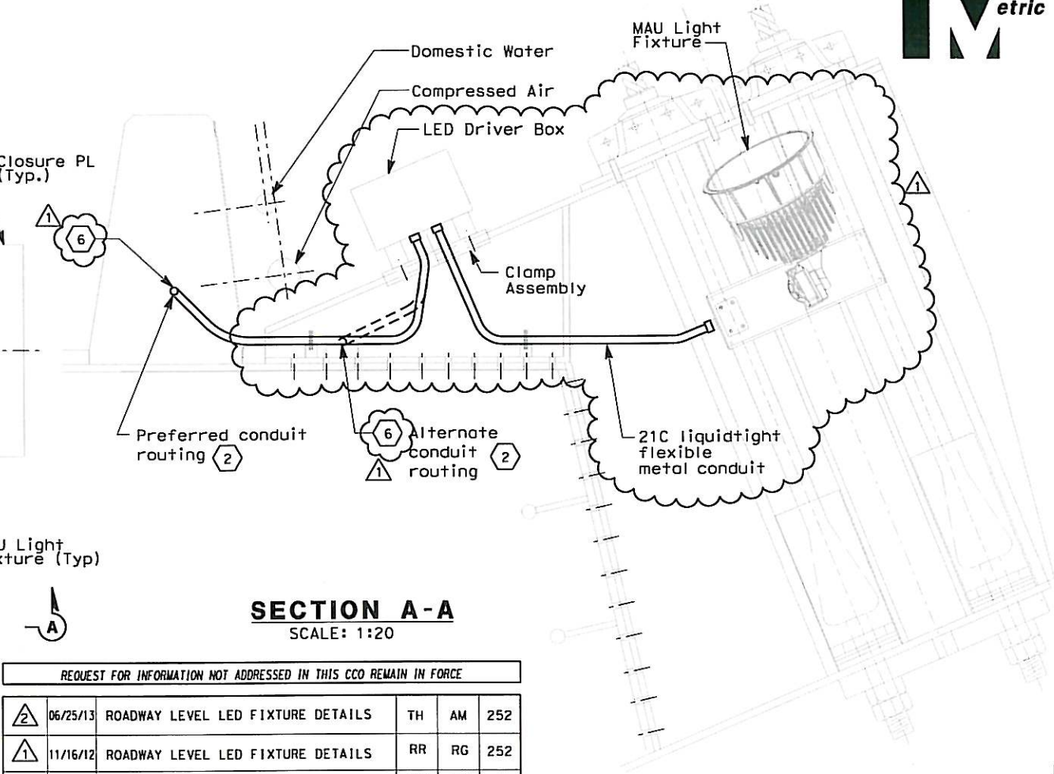

SECTION A-A

SCALE: 1:20

REQUEST FOR INFORMATION NOT ADDRESSED IN THIS CCO REMAIN IN FORCE

MARK	DATE	DESCRIPTIONS	BY	CH'D	CCO#
2	06/25/13	ROADWAY LEVEL LED FIXTURE DETAILS	TH	AM	252
1	11/16/12	ROADWAY LEVEL LED FIXTURE DETAILS	RR	RG	252
0	10/10/08	LIGHTING REVISIONS	RY AG	RG FW	43

REVISIONS

CONTRACT CHANGE ORDER NO. 252 .
SHEET 11 OF 44

REGISTERED PROFESSIONAL ENGINEER DAVID H. OTO No. 10699 Exp. 06/30/2013 ELECTRICAL STATE OF CALIFORNIA 1
FOR REVISION ONLY

REGISTERED PROFESSIONAL ENGINEER SAFIUDDIN A. MOHAMMED No. 71894 CIVIL STATE OF CALIFORNIA 2
FOR REVISION ONLY

SHEET NOTES:

2 1 Deleted.

2 The preferred conduit routing shall be utilized where possible. At locations where there is no space through the barrier diaphragm plate route conduit to PB-LTG pull box outside the barrier using the alternate path.

3 Conduit access hole per Sheet 472R2, Section A-A, Note 8.

4 Deleted.

5 Deleted.

1 6 21C liquidtight flexible metal conduit with 2#10 + #10 G and #10 bare copper wire.

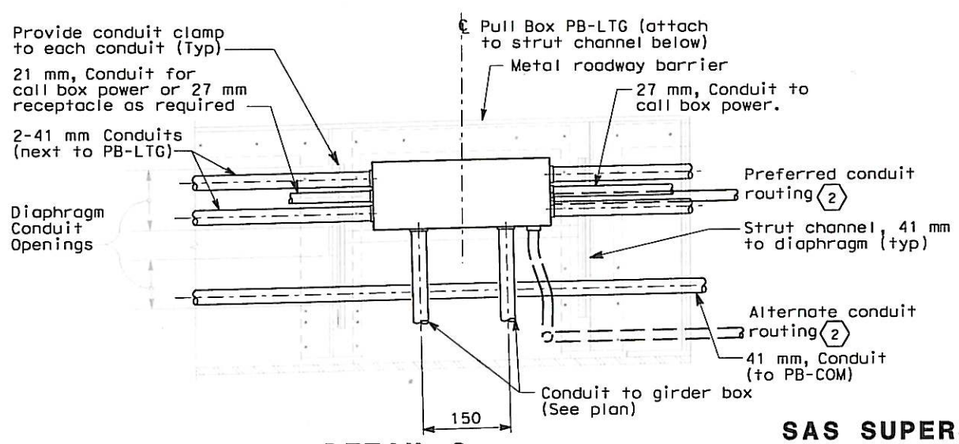

DETAIL 2

TYPICAL CONDUIT SUPPORT
PULL BOX PB-LTG MOUNTING
SCALE 1:10

DETAILS

SAS SUPERSTRUCTURE ROADWAY WESTBOUND CONDUIT LOCATIONS

SCALE AS NOTED

E-67B

THIS PLAN ACCURATE FOR ELECTRICAL WORK ONLY.

ALL DIMENSIONS ARE IN MILLIMETERS UNLESS OTHERWISE SHOWN

FOR REDUCED PLANS ORIGINAL SCALE IS IN MILLIMETERS 0 20 40 60 80

DGN FILE =>04-0120f1_0132S02R02.dgn
USERNAME =>Welsheimer

CU 04251

EA 0120F1

LAST REVISION 06-25-13

DATE PLOTTED => 6/26/2013
TIME PLOTTED => 10:09:05 AM

STATE OF CALIFORNIA - DEPARTMENT OF TRANSPORTATION

Caltrans

DESIGN OVERSIGHT
BEHZAD GOLEMOHAMMADI

CALCULATED/DESIGNED BY
CHECKED BY

DATE REVISED BY
DATE REVISED

DIST	COUNTY	ROUTE	KILOMETER POST TOTAL PROJECT	SHEET No	TOTAL SHEETS
04	SF	80	13.2/13.9	132 S3R1	1204

REGISTERED ELECTRICAL ENGINEER 11/16/12 DATE

PLANS APPROVAL DATE

REGISTERED PROFESSIONAL ENGINEER DAVID H. OTO No. 10699 Exp. 06/30/2013 ELECTRICAL STATE OF CALIFORNIA

PB AMERICAS, Inc.
A Parsons Brinckerhoff Company
303 Second St., Suite 700N
San Francisco, CA 94107-1317

The State of California or its officers or agents shall not be responsible for the accuracy or completeness of electronic copies of this plan sheet.

Caltrans now has a web site! To get to the web site, go to http://www.dot.ca.gov

Caltrans Metric

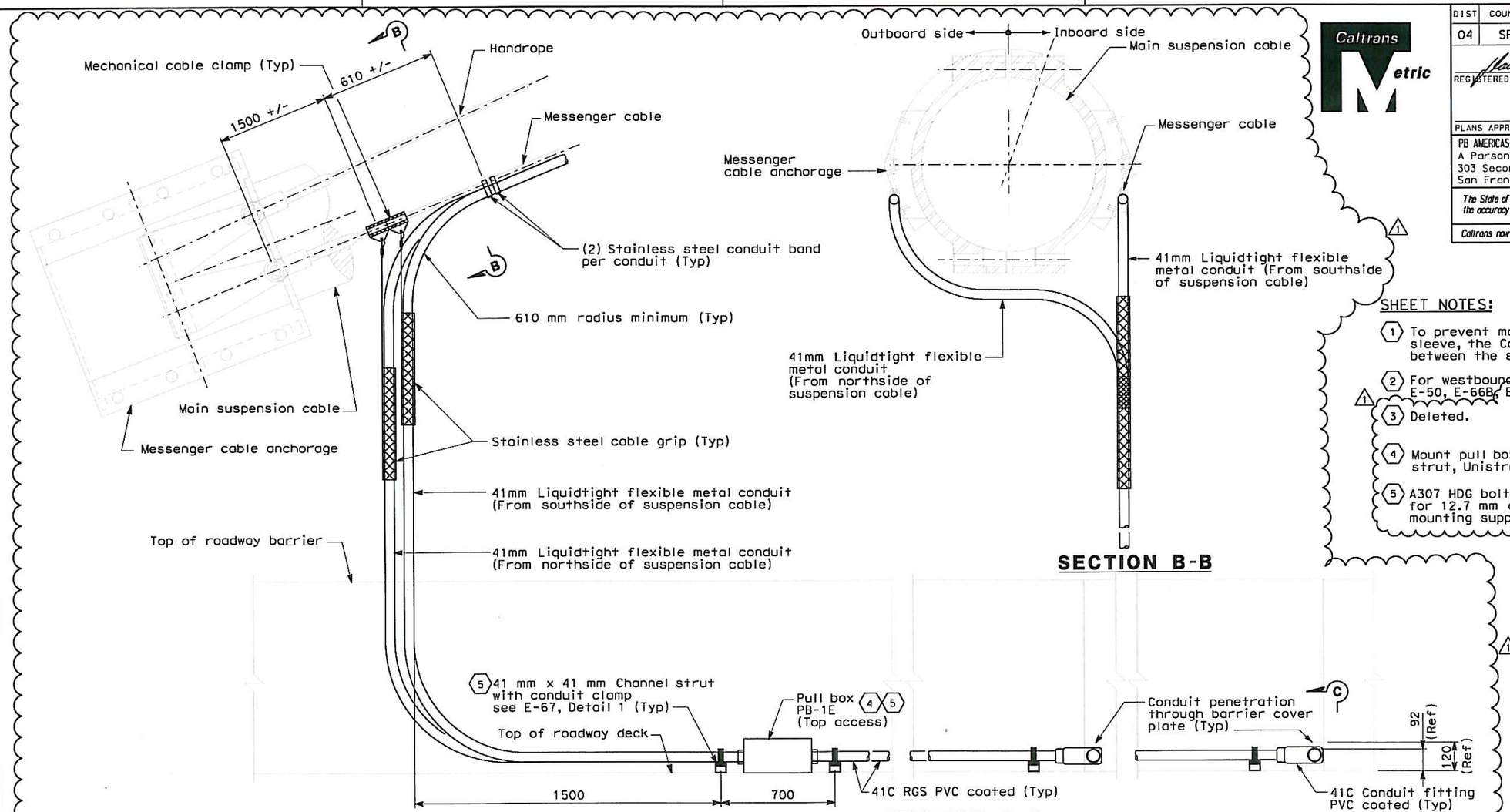

SHEET NOTES:

1. To prevent moisture from passing inside the sleeve, the Contractor shall install sealant between the sleeve and conduit.
2. For westbound conduit drop see plan sheets E-50, E-66B, E-67D, E-226 and E-230.
3. Deleted.
4. Mount pull box PB-1E on 41mm x 41mm channel strut, Unistrut #P1003 or equal.
5. A307 HDG bolts may be used in lieu of HSB for 12.7 mm or smaller diameter bolts for mounting supports.

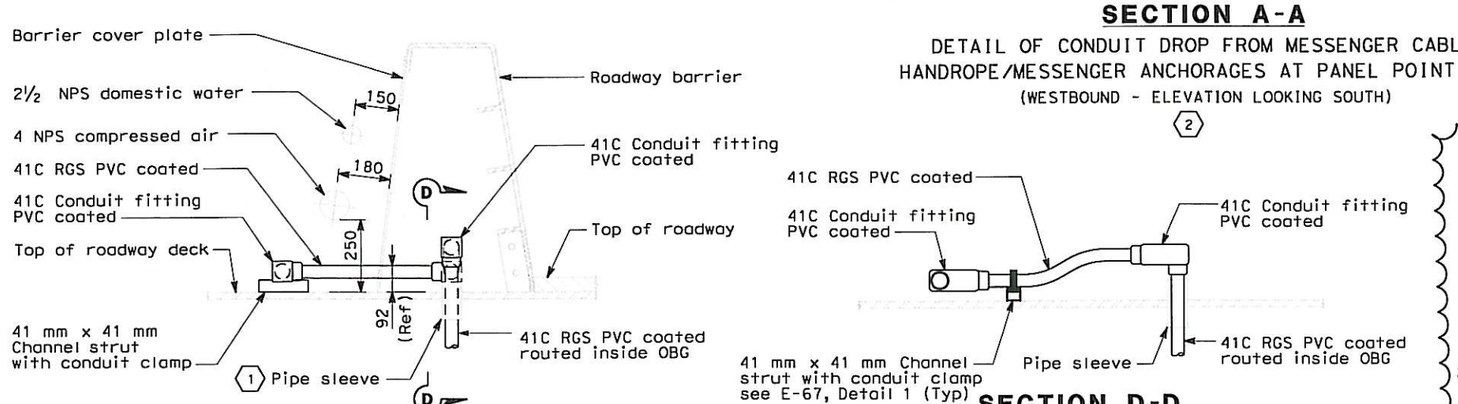

REGISTERED PROFESSIONAL ENGINEER DAVID H. OTO No. 10699 Exp. 06/30/2015 ELECTRICAL STATE OF CALIFORNIA

FOR REVISION ONLY

MARK	DATE	DESCRIPTIONS	BY	CH'D	CCO#
		REQUEST FOR INFORMATION NOT ADDRESSED IN THIS CCO REMAIN IN FORCE			
1	06/25/13	ROADWAY LEVEL LED FIXTURE DETAILS	RR	RG	252
0	11/16/12	ROADWAY LEVEL LED FIXTURE DETAILS	RR	RG	252

REVISIONS

CONTRACT CHANGE ORDER NO. 252
SHEET 12 OF 44

DETAILS
SAS SUPERSTRUCTURE ROADWAY WESTBOUND CONDUIT LOCATIONS
NO SCALE

E-67C

DATE XX/12	REVISED BY	DATE XX/12	DATE REVISED
XX	CALCULATED/DESIGNED BY	XX	CHECKED BY

DESIGN OVERSIGHT
BEHZAD GOLEMOHAMMADI

STATE OF CALIFORNIA - DEPARTMENT OF TRANSPORTATION
Caltrans

LAST REVISION 06-25-13
DATE PLOTTED => 6/26/2013
TIME PLOTTED => 10:09:40 AM

THIS PLAN ACCURATE FOR ELECTRICAL WORK ONLY.

ALL DIMENSIONS ARE IN MILLIMETERS UNLESS OTHERWISE SHOWN

FOR REDUCED PLANS ORIGINAL SCALE IS IN MILLIMETERS 0 20 40 60 80

DGN FILE =>04-0120F1_0132S03R01.dgn
USERNAME =>Melsheimer

CU 04251

EA 0120F1

DIST	COUNTY	ROUTE	KILOMETER POST TOTAL PROJECT	SHEET No	TOTAL SHEETS
04	SF	80	13.2/13.9	132 54	1204

REGISTERED ELECTRICAL ENGINEER 6/25/13 DATE

PLANS APPROVAL DATE

REGISTERED PROFESSIONAL ENGINEER DAVID H. OTO No. 10699 Exp. 06/30/2015 ELECTRICAL STATE OF CALIFORNIA

PB AMERICAS, Inc.
A Parsons Brinckerhoff Company
303 Second St., Suite 700N
San Francisco, CA 94107-1317

The State of California or its officers or agents shall not be responsible for the accuracy or completeness of electronic copies of this plan sheet.

Caltrans now has a web site! To get to the web site, go to http://www.dot.ca.gov

Caltrans Metric

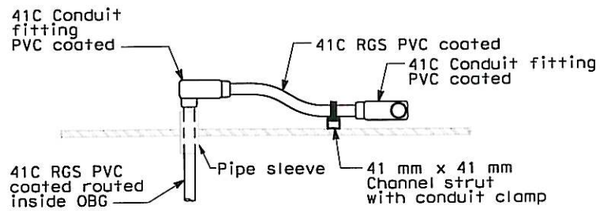

SECTION D-D

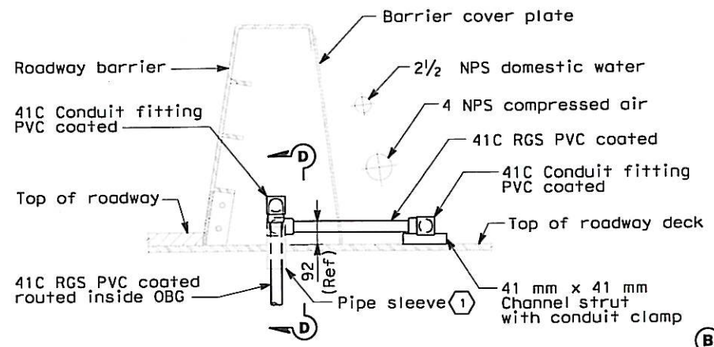

SECTION C-C

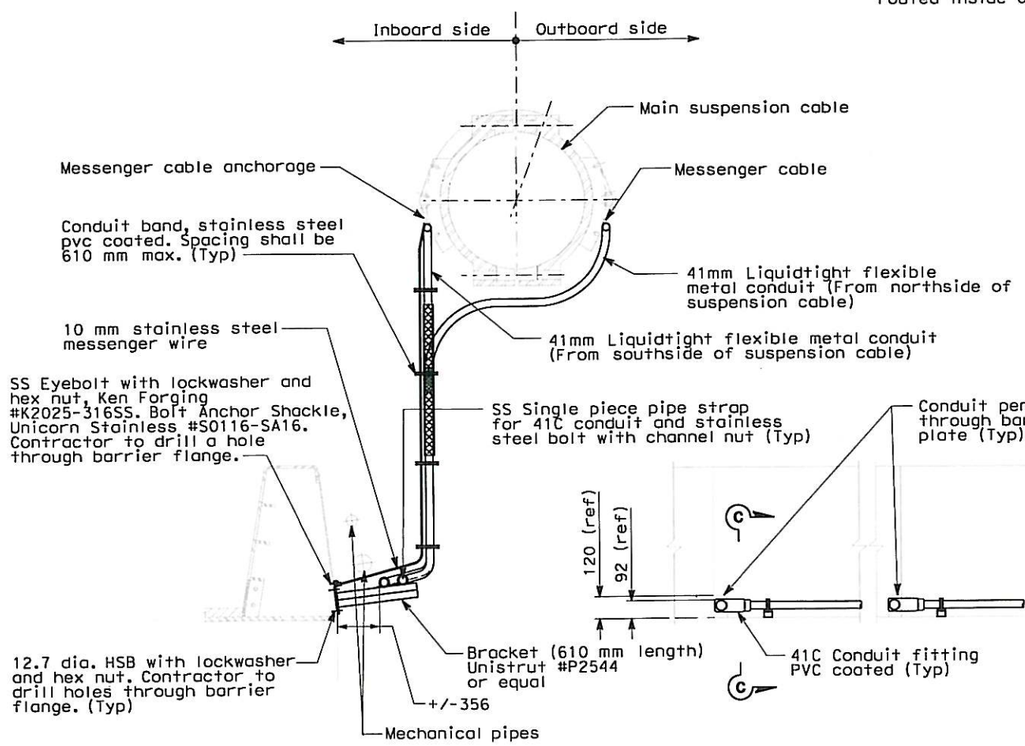

SECTION B-B

NO SCALE

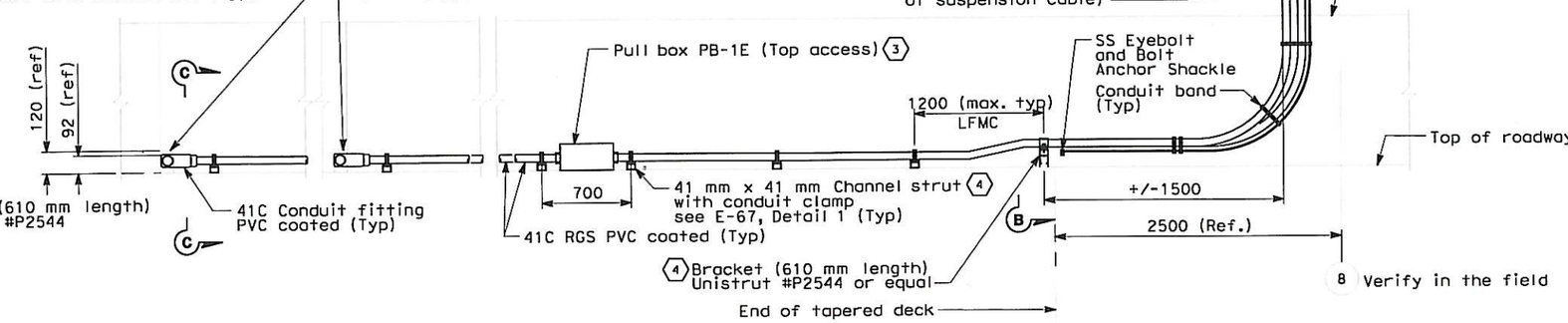

SECTION A-A

DETAIL OF CONDUIT DROP FROM MESSENGER CABLE
HANDROPE/MESSENGER ANCHORAGES AT PANEL POINT 8
WESTBOUND - ELEVATION LOOKING SOUTH

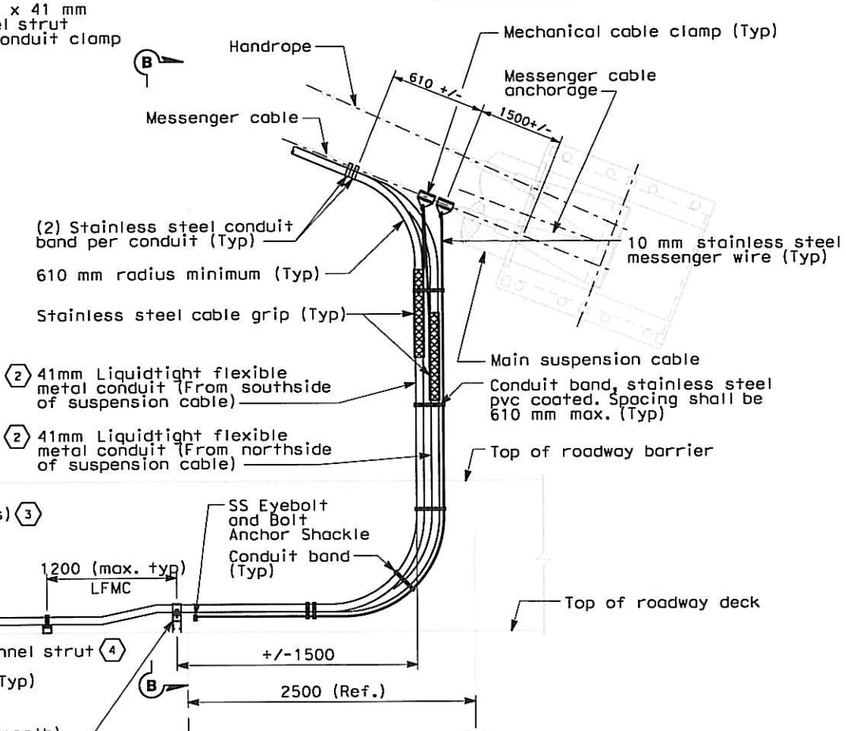

SHEET NOTES:

(1) To prevent moisture from passing inside the sleeve, the Contractor shall install sealant between the sleeve and conduit.

(2) For westbound conduit drop see plan sheets E-50, E-66B, E-67C, E-226 and E-230.

(3) Mount pull box PB-1E on 41mm x 41mm channel strut, Unistrut #P1003 or equal.

(4) A307 HDG bolts may be used in lieu of HSB for 12.7 mm or smaller diameter bolts for mounting supports.

REQUEST FOR INFORMATION NOT ADDRESSED IN THIS CCO REMAIN IN FORCE					
0	06/25/13	ROADWAY LEVEL LED FIXTURE DETAILS	TH RR	RG	252
MARK	DATE	DESCRIPTIONS	BY	CH'D	CCO#
REVISIONS					

CONTRACT CHANGE ORDER NO. 252
SHEET 13 OF 44

DETAILS
SAS SUPERSTRUCTURE ROADWAY WESTBOUND CONDUIT LOCATIONS

NO SCALE

E-67D

DATE	REVISED BY	DATE REVISED
CALCULATED/ DESIGNED BY	CHECKED BY	
DESIGN OVERSIGHT	BEHZAD GOLEMOHAMMADI	

STATE OF CALIFORNIA - DEPARTMENT OF TRANSPORTATION

Caltrans

THIS PLAN ACCURATE FOR ELECTRICAL WORK ONLY.

ALL DIMENSIONS ARE IN MILLIMETERS UNLESS OTHERWISE SHOWN

FOR REDUCED PLANS ORIGINAL SCALE IS IN MILLIMETERS 0 20 40 60 80

DGN FILE =>04-0120f1_0132S04.dgn
USERNAME =>Melsheimer

CU 04251

EA 0120F1

LAST REVISION 00-00-00

DATE PLOTTED => 6/26/2013
TIME PLOTTED => 10:18:35 AM

DIST	COUNTY	ROUTE	KILOMETER POST TOTAL PROJECT	SHEET No	TOTAL SHEETS
04	SF	80	13.2/13.9	141 R4	1204

REGISTERED ELECTRICAL ENGINEER 12/19/02 DATE

12-6-04
PLANS APPROVAL DATE

REGISTERED PROFESSIONAL ENGINEER JENS ERLINGSSON No. 8249 Exp. 9/30/06 ELECTRICAL STATE OF CALIFORNIA

PB POWER, Inc.
A Parsons Brinckerhoff Company
303 Second St., Suite 700N
San Francisco, CA 94107-1317

The State of California or its officers or agents shall not be responsible for the accuracy or completeness of electronic copies of this plan sheet.

Caltrans now has a web site! To get to the web site, go to http://www.dot.ca.gov

Caltrans Metric

TOWER LIGHTING FIXTURE SCHEDULE (ROADWAY LEVEL) WESTBOUND

Fixture Number	Fixture Type	Quantity and Max VA	Fixture Location to Center of Bolt Pattern: Panel Point	Fixture Location to Center of Bolt Pattern: Offset (Looking East)	Fixture Mount Type *	Fixture Mounting Method	Driver Box Size	Driver Box Location to Center of Bolt Pattern: Panel Point	Driver Box Location to Center of Bolt Pattern: Offset (Looking East)	Driver Box Mounting Method
A-3009-1	MAT	1-378	PP35-1000	185 Left of W5	Type 3A	Bolts through deck plate	675x360x229	PP34-2060	340 Right of W5	Drill and tap through deck plate
A-3009-2	MAT	1-378	PP35+1000	185 Left of W5	Type 3A	Bolts through deck plate	1061x360x229	PP34-620	340 Right of W5	Drill and tap through deck plate
A-3009-3	MAT	1-378	PP35+2000	185 Left of W5	Type 3A	Bolts through deck plate				
A-3009-4	MAT	1-378	PP37-3000	185 Left of W5	Type 3A	Bolts through deck plate	1061x360x229	PP38+620	340 Right of W5	Drill and tap through deck plate
A-3009-5	MAT	1-378	PP37-2000	185 Left of W5	Type 3A	Bolts through deck plate				
A-3009-6	MAT	1-187	PP39-1085	400 Right of W5	Type 2	Bolts through deck plate	1061x360x229	PP38+3125 (4)	340 Right of W5	Drill and tap through deck plate
A-3009-7	MAT	1-187	PP38+3125	1800 Right of W5	Type 2	Drill and tap through deck plate				
A-3009-8A	MAT	1-187	PP38+1875	2880 Right of W5	Type 2	Drill and tap through deck plate	1061x360x229	PP38+1875	340 Right of W5	Drill and tap through deck plate
A-3009-8B	MAT	1-187	PP38+1875	5360 Right of W5	Type 2	Drill and tap through deck plate				
A-3009-9	MAT	1-378	PP42-3300	180 Right of W2	Type 2	Studs on sole plate	1061x360x229	PP42-2500	550 Right of W2	Drill and tap through deck plate
A-3009-10	MAT	1-378	PP42-1700	180 Right of W2	Type 2	Studs on sole plate				
A-3009-11	MAT	1-187	PP42-1200	1100 Left of W5	Type 4	Bolts to back of barrier	1061x360x229	PP40-620	340 Right of W5	Drill and tap through deck plate
A-3009-12	MAT	1-187	PP42-300	1100 Left of W5	Type 4	Bolts to back of barrier				
A-3010-1	MAT	1-378	PP49+1000	185 Left of W5	Type 3A	Bolts through deck plate	675x360x229	PP50+2060	340 Right of W5	Drill and tap through deck plate
A-3010-2	MAT	1-378	PP49-1000	185 Left of W5	Type 3A	Bolts through deck plate	1061x360x229	PP50+620	340 Right of W5	Drill and tap through deck plate
A-3010-3	MAT	1-378	PP49-2000	185 Left of W5	Type 3A	Bolts through deck plate				
A-3010-4	MAT	1-378	PP47+3000	185 Left of W5	Type 3A	Bolts through deck plate	1061x360x229	PP46-620	340 Right of W5	Drill and tap through deck plate
A-3010-5	MAT	1-378	PP47+2000	185 Left of W5	Type 3A	Bolts through deck plate				
A-3010-6	MAT	1-187	PP45-1085	400 Right of W5	Type 2	Bolts through deck plate	1061x360x229	PP44+1875 (4)	340 Right of W5	Drill and tap through deck plate
A-3010-7	MAT	1-187	PP46-5625	1800 Right of W5	Type 2	Drill and tap through deck plate				
A-3010-8A	MAT	1-187	PP46-1875	2880 Right of W5	Type 2	Drill and tap through deck plate	1061x360x229	PP46-1875	340 Right of W5	Drill and tap through deck plate
A-3010-8B	MAT	1-187	PP46-1875	5360 Right of W5	Type 2	Drill and tap through deck plate				
A-3010-9	MAT	1-378	PP42+1700	180 Right of W2	Type 2	Studs on sole plate	1061x360x229	PP42+2150	550 Right of W2	Drill and tap through deck plate
A-3010-10	MAT	1-378	PP42+2600	180 Right of W2	Type 2	Studs on sole plate				
A-3010-11	MAT	1-187	PP42+1200	1100 Left of W5	Type 4	Bolts to back of barrier	1061x360x229	PP44+620	340 Right of W5	Drill and tap through deck plate
A-3010-12	MAT	1-187	PP42+300	1100 Left of W5	Type 4	Bolts to back of barrier				

* See Structural Plans For Information On Mount Types

(3)

SHEET NOTE:

(1) Deleted. (3)

NOTES:

1. For Roadway Level Lighting Wiring Diagrams see sheets E-54 thru E-55.
2. For Roadway Level Lighting Conduit Plan see sheets E-46 thru E-51.
3. For type of Roadway poles. Refer to Sheets E-85 thru E-89.

LIGHTING POLE AND FIXTURE SCHEDULE

Circuit Number	Pole Number	Station	Location: Roadway side	Mounting Height (m)	Lighting Fixture Type	Luminaire Type and Quantity: Roadway Flood	Luminaire Type and Quantity: Marker Light	Power Consumption @25C, 480 V, 60 Hz: Roadway Avg Watts	Roadway Max VA	Marker Max Watts	Marker Max VA
S-1031	1031-1	55+98	South	20	MSR	7		778	1309		
A-1035					MAM		1			57	65
S-1031	1031-2	56+36.18	South	20	MSR	7		778	1309		
A-1035					MAM		1			57	65
S-1031	1031-3	60+09.82	South	20	MSR	7		778	1309		
A-1035					MAM		1			57	65
S-1031	1031-4	60+56.18	South	20	MSR	7		778	1309		
A-1035					MAM		1			57	65
S-1032	1032-1	61+10	South	20	MSR	7		778	1309		
A-1035					MAM		1			57	65
S-1032	1032-2	61+63	South	20	MSR	7		778	1309		
A-1035					MAM		1			57	65

(3)

REGISTERED PROFESSIONAL ENGINEER DAVID H. OTO No. 10699 Exp. 06/30/2013 ELECTRICAL STATE OF CALIFORNIA (3)(4)

FOR REVISION ONLY

REGISTERED PROFESSIONAL ENGINEER FADI WALIEDDINE No. 11465 Exp. 12/31/2009 ELECTRICAL STATE OF CALIFORNIA (1)(2)

FOR REVISION ONLY

REQUEST FOR INFORMATION NOT ADDRESSED IN THIS CCO REMAIN IN FORCE

MARK	DATE	DESCRIPTIONS	BY	CH'D	CCO#
(4)	02/13/13	ROADWAY LEVEL LED FIXTURE DETAILS	RSB	RG	252
(3)	11/16/12	ROADWAY LEVEL LED FIXTURE DETAILS	RSB	RG	252
(2)	10/10/08	LIGHTING REVISIONS.	SPO MP	RG ES	43
(1)	02/19/08	ELECTRICAL MODIFICATIONS.	MP EL	RR	42

REVISIONS

CONTRACT CHANGE ORDER NO. 252
SHEET 14 OF 44

LIGHTING FIXTURE TYPE DESIGNATION

Example: MSR = SAS Safety Roadway light (3)

Location (Letter)		Function (Letter)		Application (Letter)	
M	SAS	A	Aesthetic	D	Downward floodlight
		S	Safety	U	Upward floodlight
				R	Roadway light
				T	Pylon floodlight
				M	Marker light
				P	Pylon marker light
				B	Bike path light
				V	Belvedere light
				L	Light pipe

(3)

DETAILS
SAS SUPERSTRUCTURE ROADWAY WESTBOUND LIGHTING SCHEDULES

E-82

STATE OF CALIFORNIA - DEPARTMENT OF TRANSPORTATION
Caltrans

DESIGN OVERSIGHT: BEHZAD GOLEMOHAMMADI

CALCULATED/DESIGNED BY: JP | DATE 8/01 | REVISED BY
CHECKED BY: BL | 12/01 | DATE REVISED

FOR REDUCED PLANS ORIGINAL SCALE IS IN MILLIMETERS 0 20 40 60 80

DGN FILE =>I:\13103\MS\pse\SAS Struc\CCO\SAS CCO252\CCO Draft Submittals\CCO 252 Draft 2\04-0120f1_0141R04.dgn
USERNAME =>GarciaR

CU 04251 | EA 0120F1

LAST REVISION 00-00-00 | DATE PLOTTED => 2/13/2013 TIME PLOTTED => 10:07:48 AM

DIST	COUNTY	ROUTE	KILOMETER POST TOTAL PROJECT	SHEET No	TOTAL SHEETS
04	SF	80	13.2/13.9	188 R7	1204

REGISTERED ELECTRICAL ENGINEER 12/19/02 DATE

12-6-04
PLANS APPROVAL DATE

REGISTERED PROFESSIONAL ENGINEER JENS ERLINGSSON No. 8249 Exp. 9/30/06 ELECTRICAL STATE OF CALIFORNIA

PB POWER, Inc.
A Parsons Brinckerhoff Company
303 Second St., Suite 700N
San Francisco, CA 94107-1317

The State of California or its officers or agents shall not be responsible for the accuracy or completeness of electronic copies of this plan sheet.

Caltrans now has a web site! To get to the web site, go to: http://www.dot.ca.gov

Caltrans Metric

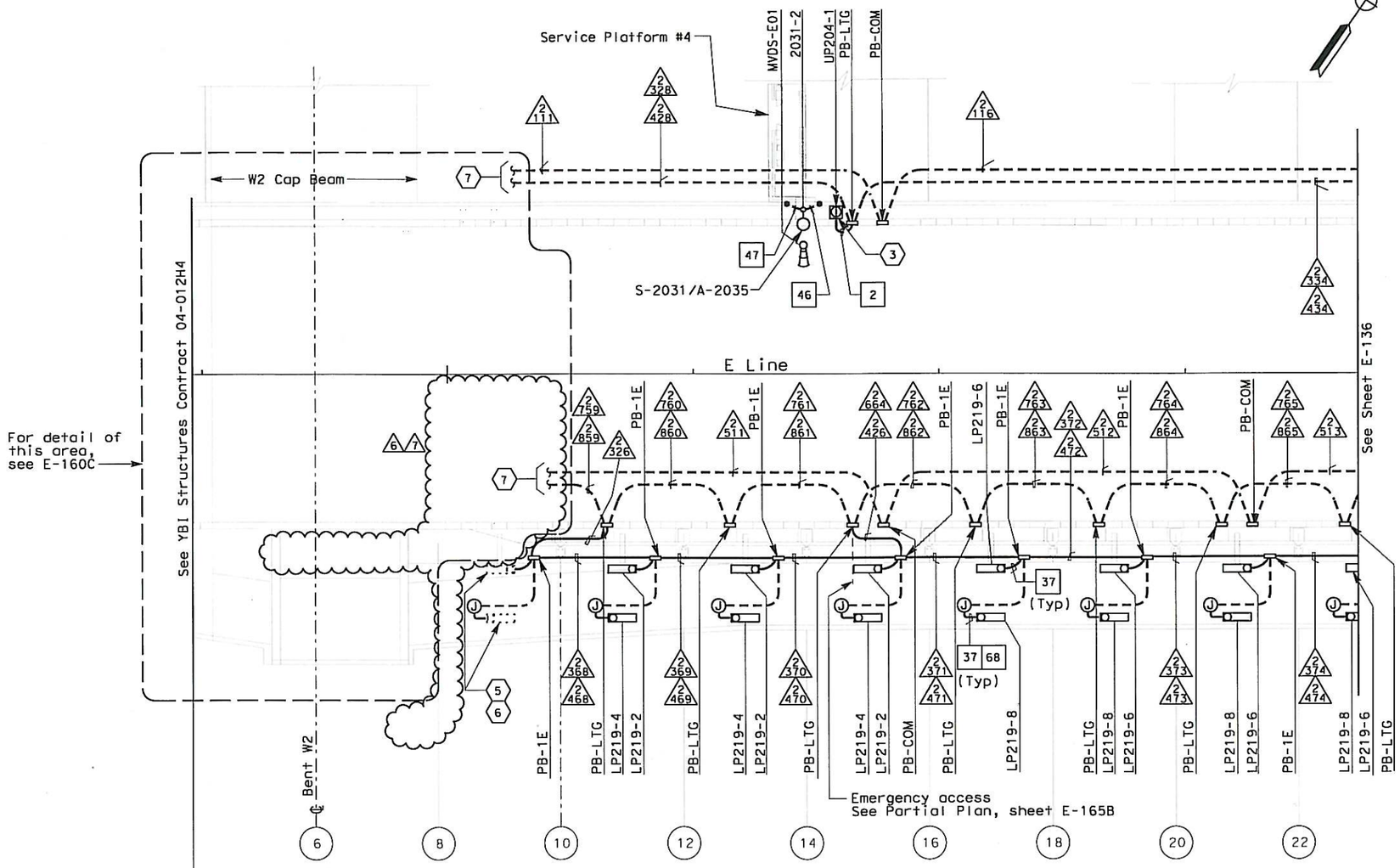

SAS SUPERSTRUCTURE - CONDUIT PLAN

SHEET NOTES:

1. Conduit from barrier pull box or other equipment down into Girder Box, see sheet E-181.
2. For conduit to suspension cable lighting, see sheet E-226.
3. Roadway Barrier Receptacle, see Detail 1, sheet E-162.
4. Deleted.
5. Railing lights are contractor furnished and installed by others.
6. Bike path electrical components west of PP-9 are furnished by contractor and installed by others.
7. See drawing E-160C for continuation of conduits.

NOTES:

1. References:
   - For typical details and locations of conduit connections to light poles, barrier outlet boxes, call boxes, overhead sign lighting, CMS, CCTV and MVDS, see sheets E-160 thru E-162 and E-169.
   - TOS equipment is shown for conduit routing only. For typical details of TOS controller and devices, see sheets E-344 through E-357.
   - For types of pull boxes, splice boxes and enclosures, see sheet E-169.
   - For circuit and conduit/cable tray schedules, see sheets starting at E-401.
2. For Roadway level, Bike Path and Belvedere Lighting Fixture Schedules and wiring diagrams see sheets E-146, E-147 and E-165.
3. For Roadway level and Bike Path Call Box Schedule, see sheet E-397.
4. For number of lighting fixtures (main tower lights) see lighting schedule sheets E-271 and E-272.
5. All conduits and fittings routed exposed between the Bike Path and the roadway shall be galvanized rigid steel, PVC coated.
6. See sheets E-160 thru E-165 for conduit locations.
7. For Belvedere Lighting Fixture installation, see sheet E-173.

REGISTERED PROFESSIONAL ENGINEER DAVID H. OTO No. 10699 Exp. 06/30/2015 ELECTRICAL STATE OF CALIFORNIA

FOR REVISION ONLY 6 7

REQUEST FOR INFORMATION NOT ADDRESSED IN THIS CCO REMAIN IN FORCE

MARK	DATE	DESCRIPTIONS	BY	CH'D	CCO#
7	06/25/13	ROADWAY LEVEL LED FIXTURE DETAILS	RR	RG	252
6	11/16/12	ROADWAY LEVEL LED FIXTURE DETAILS	RR	RG	252
5	04/15/11	BIKE PATH CONDUIT	TW	RG	73
4	06/11/10	BIKE PATH CONDUIT	TW	RG	73
3	06/25/09	WEST END BARRIER CONDUIT	RG	FW	44S1
2	12/15/08	BIKE PATH DETAILS	TW	RG FW	99
1	02/19/08	ELECTRICAL MODIFICATIONS	MP EL	RR	42

REVISIONS

CONTRACT CHANGE ORDER NO. 252
SHEET 15 OF 44

REGISTERED PROFESSIONAL ENGINEER MARCELL FUNIO TAGAL No. E 8651 Exp. 9/30/2008 ELECTRICAL STATE OF CALIFORNIA

FOR REVISION ONLY 1

REGISTERED PROFESSIONAL ENGINEER FADI WALIEDDINE No. 11465 Exp. 12/31/2009 ELECTRICAL STATE OF CALIFORNIA

FOR REVISION ONLY 2 3

REGISTERED PROFESSIONAL ENGINEER SYN YEE CHIN No. 18186 Exp. 09/30/2011 ELECTRICAL STATE OF CALIFORNIA

FOR REVISION ONLY 4 5

REVISIONS SUPERCEDED

SAS SUPERSTRUCTURE ROADWAY EASTBOUND
LIGHTING AND ELECTRICAL SYSTEMS

SCALE 1:200

E-135

THIS PLAN ACCURATE FOR ELECTRICAL WORK ONLY.

ALL DIMENSIONS ARE IN METERS UNLESS OTHERWISE SHOWN.

FOR REDUCED PLANS ORIGINAL SCALE IS IN MILLIMETERS 0 20 40 60 80

DGN FILE =>04-0120f1_0188R07.dgn
USERNAME =>Welsheimer

CU 04251 | EA 0120F1

DATE PLOTTED => 6/26/2013
TIME PLOTTED => 10:19:19 AM
LAST REVISION 06-25-13

STATE OF CALIFORNIA - DEPARTMENT OF TRANSPORTATION
Caltrans

DESIGN OVERSIGHT
BEHZAD GOLEMOHAMMADI

CALCULATED/DESIGNED BY EDC DATE 08/02 REVISED BY
CHECKED BY CYF 08/02 DATE REVISED

DIST	COUNTY	ROUTE	KILOMETER POST TOTAL PROJECT	SHEET No	TOTAL SHEETS
04	SF	80	13.2/13.9	189 R7	1204

REGISTERED ELECTRICAL ENGINEER 12/19/02 DATE

12-6-04
PLANS APPROVAL DATE

REGISTERED PROFESSIONAL ENGINEER JENS ERLINGSSON No. 8249 Exp. 9/30/06 ELECTRICAL STATE OF CALIFORNIA

PB POWER, Inc.
A Parsons Brinckerhoff Company
303 Second St., Suite 700N
San Francisco, CA 94107-1317

The State of California or its officers or agents shall not be responsible for the accuracy or completeness of electronic copies of this plan sheet.

Caltrans now has a web site! To get to the web site, go to: http://www.dot.ca.gov

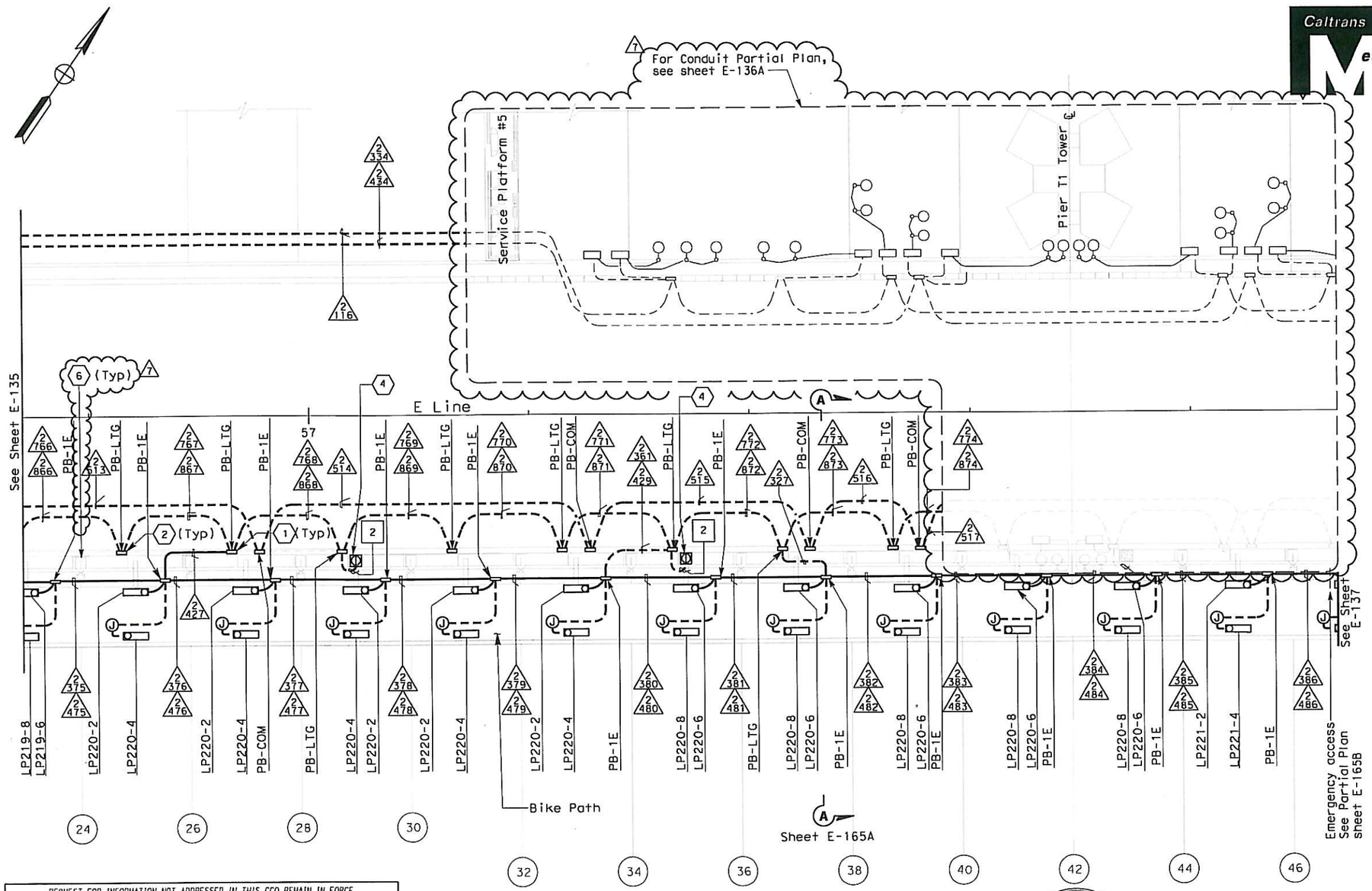

SAS SUPERSTRUCTURE CONDUIT - PLAN

SHEET NOTES:

1. Conduit from barrier pullbox or other equipment down into Girder Box,
2. For conduit to tower and suspension cable lighting see sheet E-227.
3. DELETED
4. Roadway Barrier Receptacle, see Detail 1, sheet E-162.
5. DELETED
6. See sheet E-161B for Suspender Uplight conduit location.

NOTES:

1. References:
   - For typical details and locations of conduit connections to light poles, barrier outlet boxes, call boxes, overhead sign lighting, CMS, CCTV and MVDS, see sheets E-160 thru E-162 and E-169.
   - TOS equipment is shown for conduit routing only. For typical details of TOS controller and devices, see sheets E-344 through E-357.
   - For types of pull boxes, splice boxes and enclosures, see sheet E-169.
   - For circuit and conduit/cable tray schedules, see sheets starting at E-401.
2. For Roadway Level Call Boxes, refer to sheet E-396.
3. For Roadway level, Bike Path and Belvedere Lighting Fixture Schedules, see sheets E-146, E-147 and E-165.
4. For Roadway level and Bike Path Call Box Schedule, see sheet E-397.
5. For number of lighting fixtures (main tower lights) see lighting schedule sheets E-271 and E-272.
6. All conduits and fittings routed exposed between the Bike Path and the roadway shall be galvanized rigid steel, PVC coated.
7. See sheets E-160 thru E-165 for conduit locations.

REQUEST FOR INFORMATION NOT ADDRESSED IN THIS CCO REMAIN IN FORCE

MARK	DATE	DESCRIPTIONS	BY	CH'D	CCO#
		REVISIONS			
7	11/16/12	ROADWAY LEVEL LED FIXTURE DETAILS	RR	RG	252
6	04/15/11	BIKE PATH CONDUIT	TW	RG	73
5	06/11/10	BIKE PATH CONDUIT	TW	RG	73
4	10/01/08	LIGHTING REVISIONS	RY AG	RG FW	43
3	12/15/08	BIKE PATH PLATFORM EMERGENCY ACCESS	TW	RG FW	99
2	03/04/08	BARRIER MODIFICATIONS	JS BM	RG SE	44
1	02/19/08	ELECTRICAL MODIFICATIONS	MP EL	RR	42

REGISTERED PROFESSIONAL ENGINEER MAXWELL FUNIO TAKAKI No. E 8651 Exp. 9/30/2008 ELECTRICAL STATE OF CALIFORNIA
FOR REVISION ONLY 1

REGISTERED PROFESSIONAL ENGINEER S. A. ESTOQUE, JR. No. E-10151 Exp. 12/31/2008 ELECTRICAL STATE OF CALIFORNIA
FOR REVISION ONLY 2

REGISTERED PROFESSIONAL ENGINEER FADI WALIEDDINE No. 11465 Exp. 12/31/2009 ELECTRICAL STATE OF CALIFORNIA
FOR REVISION ONLY 3 4

REGISTERED PROFESSIONAL ENGINEER SYN YEE CHIN No. 18186 Exp. 09/30/2011 ELECTRICAL STATE OF CALIFORNIA
FOR REVISION ONLY 5

REGISTERED PROFESSIONAL ENGINEER DAVID H. OTO No. 10699 Exp. 06/30/2013 ELECTRICAL STATE OF CALIFORNIA
FOR REVISION ONLY 6 7

REVISIONS SUPERCEDED

SAS SUPERSTRUCTURE ROADWAY EASTBOUND
LIGHTING AND ELECTRICAL SYSTEMS

SCALE 1:200

CONTRACT CHANGE ORDER NO. 252
SHEET 16 OF 44

THIS PLAN ACCURATE FOR ELECTRICAL WORK ONLY

ALL DIMENSIONS ARE IN METERS UNLESS OTHERWISE SHOWN

FOR REDUCED PLANS ORIGINAL SCALE IS IN MILLIMETERS 0 20 40 60 80

DGN FILE =>04-0120F1_0189R07.dgn
USERNAME =>Melsheimer

CU 04251 | EA 0120F1

E-136

DATE PLOTTED => 11/16/2012
TIME PLOTTED => 5:50:19 PM
LAST REVISION 11-16-12

STATE OF CALIFORNIA - DEPARTMENT OF TRANSPORTATION
Caltrans

DESIGN OVERSIGHT: BEHZAD GOLEMOHAMMADI

CALCULATED/DESIGNED BY: EDC — DATE 08/02 — REVISED BY
CHECKED BY: CYF — 08/02 — DATE REVISED

DIST	COUNTY	ROUTE	KILOMETER POST TOTAL PROJECT	SHEET No	TOTAL SHEETS
04	SF	80	13.2/13.9	189 S1	1204

Caltrans Metric

11/16/12
REGISTERED ELECTRICAL ENGINEER DATE

PLANS APPROVAL DATE

REGISTERED PROFESSIONAL ENGINEER DAVID H. OTO No. 10699 Exp. 06/30/2013 ELECTRICAL STATE OF CALIFORNIA

PB AMERICAS, Inc.
A Parsons Brinckerhoff Company
303 Second St., Suite 700N
San Francisco, CA 94107-1317

The State of California or its officers or agents shall not be responsible for the accuracy or completeness of electronic copies of this plan sheet.

Caltrans now has a web site! To get to the web site, go to http://www.dot.ca.gov

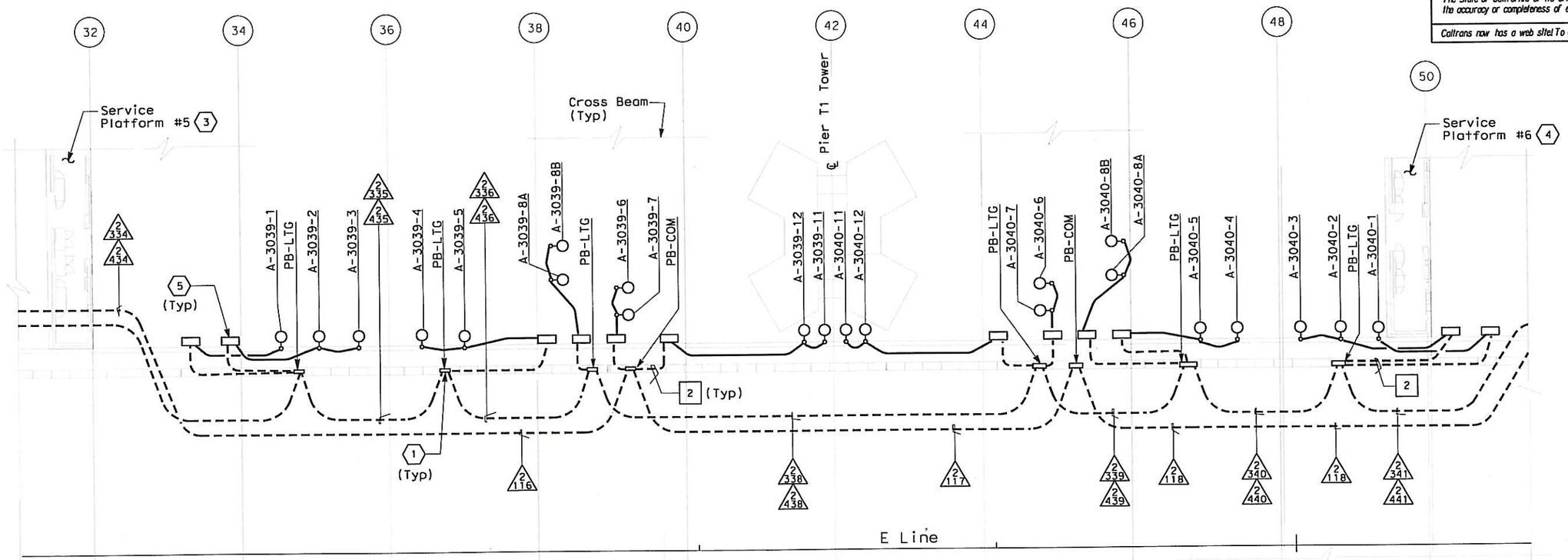

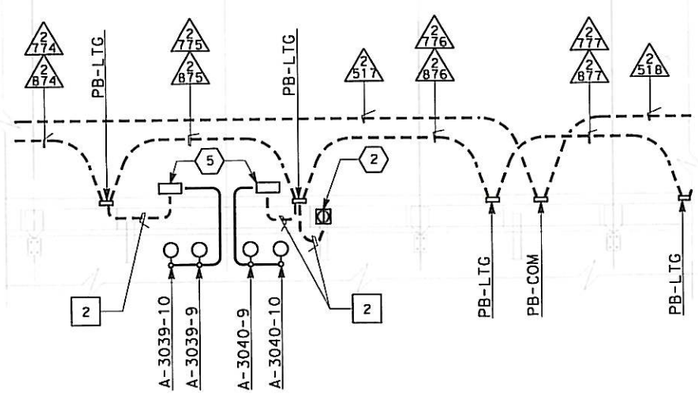

CONDUIT PARTIAL PLAN

SHEET NOTES:

1. See sheet E-67A for conduit details common to deck, crossbeam and counterweight mounted light fixtures.
2. See sheet E-161A for conduit details common to barrier and bike path mounted fixtures.
3. Contractor shall furnish and install UP-205 and LP-220 per sheet E-72. For complete scope of work on platform and other related work not shown on this sheet, see Electrical Special provisions.
4. Contractor shall furnish and install UP-206 and LP-221 per sheet E-72. For complete scope of work on platform and other related work not shown on this sheet, see Electrical Special Provisions.
5. LED Driver Box.
6. See sheet E-168 for Fixture Schedule.

REQUEST FOR INFORMATION NOT ADDRESSED IN THIS CCO REMAIN IN FORCE

MARK	DATE	DESCRIPTIONS	BY	CH'D	CCO#
0	11/16/12	ROADWAY LEVEL LED FIXTURE DETAILS	RR	RG	252

REVISIONS

CONTRACT CHANGE ORDER NO. 252
SHEET 17 OF 44

SAS SUPERSTRUCTURE ROADWAY EASTBOUND
LIGHTING AND ELECTRICAL SYSTEMS
SCALE 1:150

E-136A

THIS PLAN ACCURATE FOR ELECTRICAL WORK ONLY.

ALL DIMENSIONS ARE IN METERS UNLESS OTHERWISE SHOWN

FOR REDUCED PLANS ORIGINAL SCALE IS IN MILLIMETERS 0 20 40 60 80

DGN FILE =>04-0120f1_0189S01.dgn
USERNAME =>Melsheimer

CU 04251

EA 0120F1

STATE OF CALIFORNIA - DEPARTMENT OF TRANSPORTATION
Caltrans

DESIGN OVERSIGHT: BEHZAD GOLEMOHAMMADI

CALCULATED/DESIGNED BY: XX DATE XX/12 REVISED BY
CHECKED BY: XX XX/12 DATE REVISED

LAST REVISION 00-00-00
DATE PLOTTED => 6/26/2013
TIME PLOTTED => 10:20:03 AM

DIST	COUNTY	ROUTE	KILOMETER POST TOTAL PROJECT	SHEET No	TOTAL SHEETS
04	SF	80	13.2/13.9	190 R5	1204

190
R5

Caltrans Metric

REGISTERED ELECTRICAL ENGINEER 12/19/02 DATE

12-6-04
PLANS APPROVAL DATE

REGISTERED PROFESSIONAL ENGINEER JENS ERLINGSSON No. 8249 Exp. 9/30/06 ELECTRICAL STATE OF CALIFORNIA

PB POWER, Inc.
A Parsons Brinckerhoff Company
303 Second St., Suite 700N
San Francisco, CA 94107-1317

The State of California or its officers or agents shall not be responsible for the accuracy or completeness of electronic copies of this plan sheet.

Caltrans now has a web site! To get to the web site, go to: Http://www.dot.ca.gov

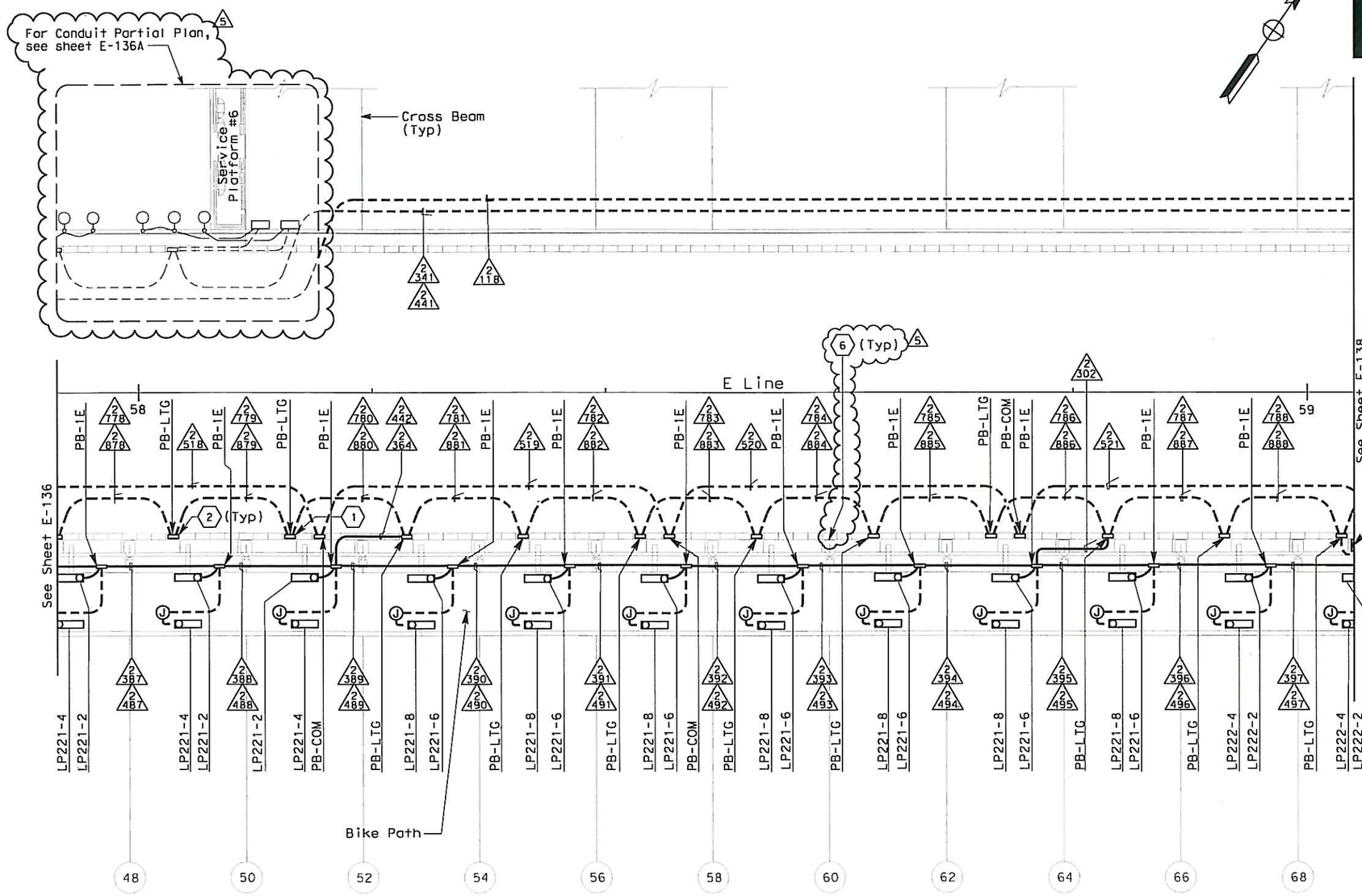

SHEET NOTES:

1. Conduit from barrier pullbox or other equipment down into Girder Box, see sheet E-183.
2. For conduit to tower and suspension cable lighting see sheet E-228.
3. DELETED
4. DELETED
5. DELETED
6. See sheet E-161B for Suspender Uplight conduit location.

NOTES:

1. References:
   - For typical details and locations of conduit connections to light poles, barrier outlet boxes, call boxes, overhead sign lighting, CMS, CCTV and MVDS, see sheets E-160 thru E-162 and E-169.
   - TOS equipment is shown for conduit routing only. For typical details of TOS controller and devices, see sheets E-344 through E-357.
   - For types of pull boxes, splice boxes and enclosures, see sheet E-169.
   - For circuit and conduit/cable tray schedules, see sheets starting at E-401.
2. For Roadway Level Call Boxes, refer to sheet E-396.
3. For Roadway level, Bike Path and Belvedere Lighting Fixture Schedules, see sheets E-146, E-147 and E-165.
4. For Roadway level and Bike Path Call Box Schedule, see sheet E-397.
5. For number of lighting fixtures (main tower lights) see lighting schedule sheets E-271 and E-272.
6. All conduits and fittings routed exposed between the Bike Path and the roadway shall be galvanized rigid steel, PVC coated.
7. See sheets E-160 thru E-165 for conduit locations.

△3 REVISIONS SUPERCEDED

SAS SUPERSTRUCTURE - CONDUIT PLAN

REGISTERED PROFESSIONAL ENGINEER DAVID H. OTO No. 10699 Exp. 06/30/2013 ELECTRICAL STATE OF CALIFORNIA

△4 △5 FOR REVISION ONLY

REGISTERED PROFESSIONAL ENGINEER MAXWELL FUNIO TAKAKI No. E 8651 Exp. 9/30/2008 ELECTRICAL STATE OF CALIFORNIA

FOR REVISION ONLY △1

REGISTERED PROFESSIONAL ENGINEER FADI WALIEDDINE No. 11465 Exp. 12/31/2009 ELECTRICAL STATE OF CALIFORNIA

FOR REVISION ONLY △2

REGISTERED PROFESSIONAL ENGINEER SYN YEE CHIN No. 18186 Exp. 09/30/2011 ELECTRICAL STATE OF CALIFORNIA

FOR REVISION ONLY △3

REQUEST FOR INFORMATION NOT ADDRESSED IN THIS CCO REMAIN IN FORCE					
5	11/16/12	ROADWAY LEVEL LED FIXTURE DETAILS	RR	RG	252
4	04/15/11	BIKE PATH CONDUIT	TW	RG	73
3	06/11/10	BIKE PATH CONDUIT	TW	RG	73
2	03/04/08	BARRIER MODIFICATIONS	TW	RG	44
1	02/19/08	ELECTRICAL MODIFICATIONS	MP EL	RR	42
MARK	DATE	DESCRIPTIONS	BY	CH'D	CCO#
		REVISIONS			

CONTRACT CHANGE ORDER NO. 252
SHEET 18 OF 44

THIS PLAN ACCURATE FOR ELECTRICAL WORK ONLY.

SAS SUPERSTRUCTURE ROADWAY EASTBOUND
LIGHTING AND ELECTRICAL SYSTEMS
SCALE 1:200

E-137

ALL DIMENSIONS ARE IN METERS UNLESS OTHERWISE SHOWN

FOR REDUCED PLANS ORIGINAL SCALE IS IN MILLIMETERS 0 20 40 60 80

DGN FILE =>04-0120f1_0190R05.dgn
USERNAME =>Melsheimer

CU 04251 | EA 0120F1

STATE OF CALIFORNIA - DEPARTMENT OF TRANSPORTATION
Caltrans

DESIGN OVERSIGHT: BEHZAD GOLEMOHAMMADI

CALCULATED/DESIGNED BY: EDC | CHECKED BY: CYF

DATE	REVISED BY	DATE	REVISED
08/02		08/02	

LAST REVISION 11-16-12 | DATE PLOTTED => 11/16/2012 | TIME PLOTTED => 5:49:17 PM

DIST	COUNTY	ROUTE	KILOMETER POST TOTAL PROJECT	SHEET No	TOTAL SHEETS
04	SF	80	13.2/13.9	192 R7	1204

REGISTERED ELECTRICAL ENGINEER 12/19/02 DATE

12-6-04
PLANS APPROVAL DATE

PB POWER, Inc.
A Parsons Brinckerhoff Company
303 Second St., Suite 700N
San Francisco, CA 94107-1317

REGISTERED PROFESSIONAL ENGINEER JENS ERLINGSSON No. 8249 Exp. 9/30/06 ELECTRICAL STATE OF CALIFORNIA

The State of California or its officers or agents shall not be responsible for the accuracy or completeness of electronic copies of this plan sheet.

Caltrans now has a web site! To get to the web site, go to http://www.dot.ca.gov

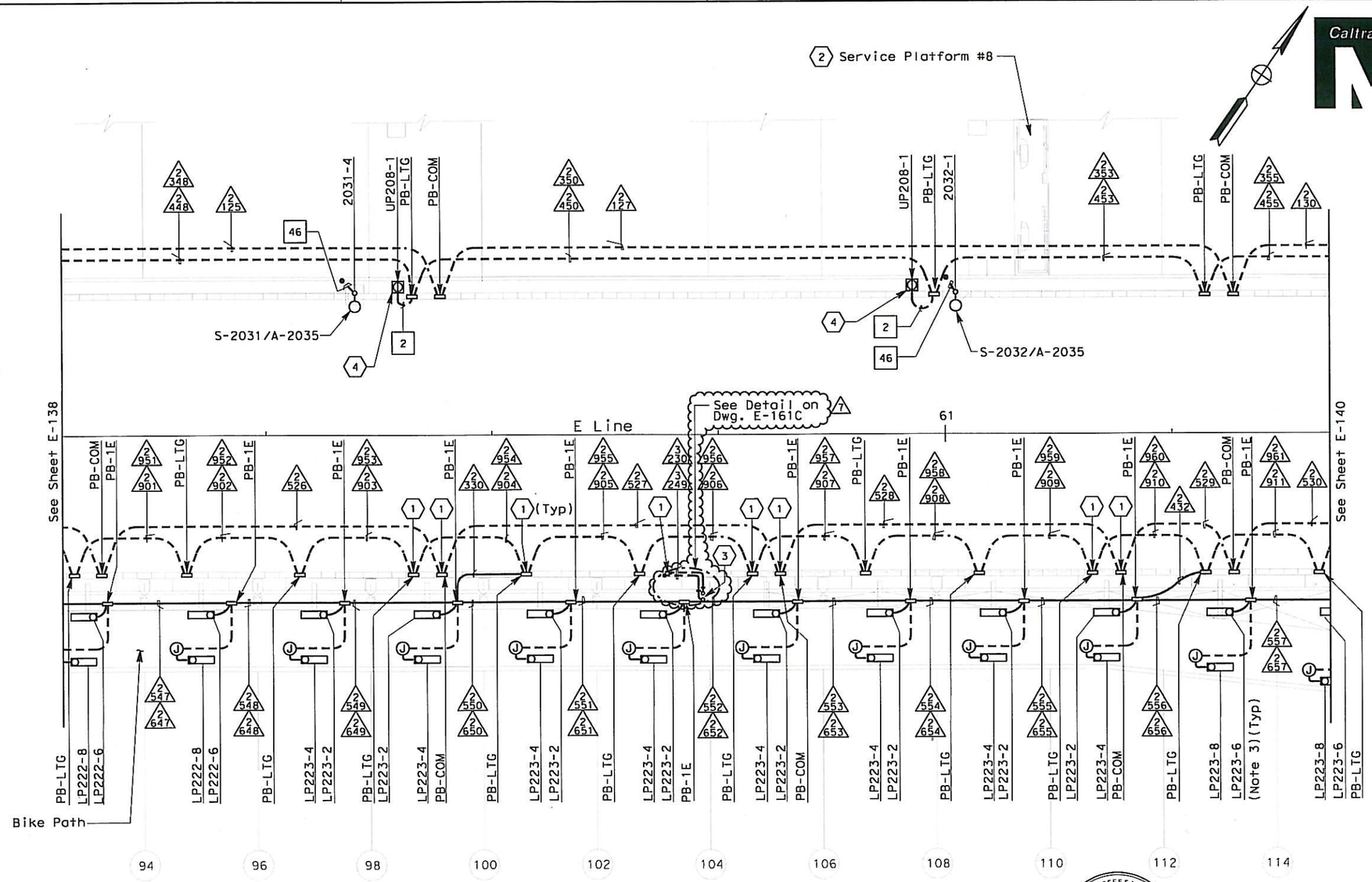

SHEET NOTES:

1. Conduit from barrier pullbox or other equipment down into Girder Box, see sheet E-185.
2. Contractor shall furnish and install UP-208 and LP-223 per sheet E-75. For complete scope of work on platform and other related work not shown on this sheet, see Electrical Special Provisions.
3. For conduit to tower and suspension cable lighting, see sheet E-230.
4. Roadway Barrier Receptacle, see Detail 1, sheet E-162.

NOTES:

1. References:
   - For typical details and locations of conduit connections to light poles, barrier outlet boxes, call boxes, overhead sign lighting, CMS, CCTV and MVDS, see sheets E-160 thru E-162 and E-169.
   - TOS equipment is shown for conduit routing only. For typical details of TOS controller and devices, see sheets E-344 through E-357.
   - For types of pull boxes, splice boxes and enclosures, see sheet E-169.
   - For circuit and conduit/cable tray schedules, see sheets starting at E-401.
2. For Roadway Level Call Boxes, refer to sheet E-396.
3. For Roadway level, Bike Path and Belvedere Lighting Fixture Schedules, see sheets E-146, E-147 and E-165.
4. For Roadway level and Bike Path Call Box Schedule, see sheet E-397.
5. For number of lighting fixtures (main tower lights) see lighting schedule sheets E-271 and E-272.
6. All conduits and fittings routed exposed between the Bike Path and the roadway shall be rigid galvanized steel, PVC coated.
7. See sheets E-160 thru E-165 for conduit locations.

REQUEST FOR INFORMATION NOT ADDRESSED IN THIS CCO REMAIN IN FORCE

MARK	DATE	DESCRIPTIONS	BY	CH'D	CCO#
7	11/16/12	ROADWAY LEVEL LED FIXTURE DETAILS	RR	RG	252
6	04/15/11	BIKE PATH CONDUIT	TW	RG	73
5	06/11/10	BIKE PATH CONDUIT	TW	RG	73
4	01/08/09	BIKE PATH DETAILS	TW	RG FW	99
3	12/15/08	BIKE PATH DETAILS	TW	RG FW	99
2	03/04/08	BARRIER MODIFICATIONS	JS BM	RG SE	44
1	02/19/08	ELECTRICAL MODIFICATIONS	MP EL	RR	42

REVISIONS

CONTRACT CHANGE ORDER NO. 252
SHEET 19 OF 44

THIS PLAN ACCURATE FOR ELECTRICAL WORK ONLY.

SAS SUPERSTRUCTURE - CONDUIT PLAN

REGISTERED PROFESSIONAL ENGINEER DAVID H. OTO No. 10699 Exp. 06/30/2013 ELECTRICAL STATE OF CALIFORNIA 7

FOR REVISION ONLY

REGISTERED PROFESSIONAL ENGINEER MARSELL FUMIO TAKAKI No. E 8651 Exp. 9/30/2008 ELECTRICAL STATE OF CALIFORNIA

FOR REVISION ONLY 1

REGISTERED PROFESSIONAL ENGINEER S. A. ESTOQUE, JR. No. E-10151 Exp. 12/31/2008 ELECTRICAL STATE OF CALIFORNIA

FOR REVISION ONLY 2

REGISTERED PROFESSIONAL ENGINEER FADI WALIEDDINE No. 11465 Exp. 12/31/2009 ELECTRICAL STATE OF CALIFORNIA

FOR REVISION ONLY 3 4

REGISTERED PROFESSIONAL ENGINEER SYN YEE CHIN No. 18186 Exp. 09/30/2011 ELECTRICAL STATE OF CALIFORNIA

FOR REVISION ONLY 5 6

REVISIONS SUPERCEDED

SAS SUPERSTRUCTURE ROADWAY EASTBOUND
LIGHTING AND ELECTRICAL SYSTEMS

SCALE 1:200

E-139

STATE OF CALIFORNIA - DEPARTMENT OF TRANSPORTATION
Caltrans

DESIGN OVERSIGHT: BEHZAD GOLEMOHAMMADI
CALCULATED/DESIGNED BY: EDC DATE 08/02 REVISED BY
CHECKED BY: CYF 08/02 DATE REVISED

FOR REDUCED PLANS ORIGINAL SCALE IS IN MILLIMETERS 0 20 40 60 80

DGN FILE =>04-0120f1_0192R07.dgn
USERNAME =>Melsheimer

CU 04251 EA 0120F1

LAST REVISION 11-16-12 DATE PLOTTED => 6/26/2013 TIME PLOTTED => 10:20:35 AM

DIST	COUNTY	ROUTE	KILOMETER POST TOTAL PROJECT	SHEET No.	TOTAL SHEETS
04	SF	80	13.2/13.9	196 R2	1204

12/19/02
REGISTERED ELECTRICAL ENGINEER DATE

12-6-04
PLANS APPROVAL DATE

REGISTERED PROFESSIONAL ENGINEER JENS ERLINGSSON No. 8249 Exp. 9/30/06 ELECTRICAL STATE OF CALIFORNIA

PB POWER, Inc.
A Parsons Brinckerhoff Company
303 Second St., Suite 700N
San Francisco, CA 94107-1317

The State of California or its officers or agents shall not be responsible for the accuracy or completeness of electronic copies of this plan sheet.

Caltrans now has a web site! To get to the web site, go to http://www.dot.ca.gov

Caltrans Metric

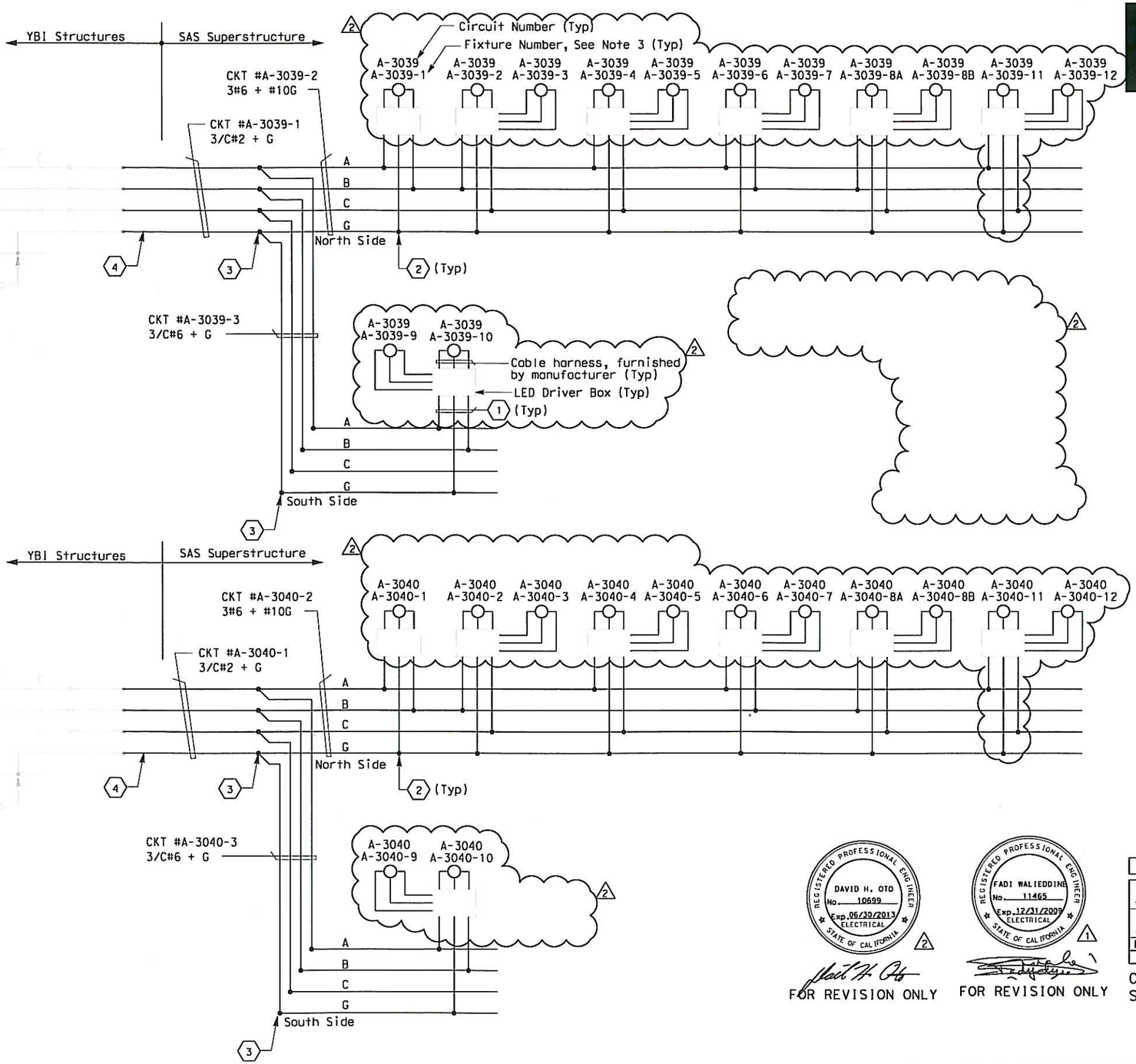

480 V MAIN TOWER LIGHTING

SHEET NOTES:

1. 2#10 + #10 G single conductors.
2. Conductors spliced inside pull box PB-LTG.
3. Conductors spliced inside junction box located inside girder.
4. The Contractor shall extend and coil 5 meters of cable in manhole 25. All cables shall be tagged with circuit numbers as shown.
5. Deleted.

NOTES:

1. Use multi-conductor cable if circuit is routed via cable trays.
2. References:
   - For LVCC-B single line diagrams, see sheets E-32 to E-34.
   - For pull box schedules, see sheet E-169.
   - For circuit and conduit/cable tray schedules, see sheets starting at E-401.
3. For lighting schedule see sheet E-168.

REGISTERED PROFESSIONAL ENGINEER DAVID H. OTO No. 10699 Exp. 06/30/2013 ELECTRICAL STATE OF CALIFORNIA

FOR REVISION ONLY

REGISTERED PROFESSIONAL ENGINEER FADI WALIEDDINE No. 11465 Exp. 12/31/2009 ELECTRICAL STATE OF CALIFORNIA

FOR REVISION ONLY

REQUEST FOR INFORMATION NOT ADDRESSED IN THIS CCO REMAIN IN FORCE

MARK	DATE	DESCRIPTIONS	BY	CH'D	CCO#
2	11/16/12	ROADWAY LEVEL LED FIXTURE DETAILS	RSB	RG	252
1	10/10/08	LIGHTING REVISIONS	RY AG	RG FW	43

REVISIONS

CONTRACT CHANGE ORDER NO. 252
SHEET 20 OF 44

DETAILS
SAS SUPERSTRUCTURE ROADWAY EASTBOUND
480 V ROADWAY LIGHTING WIRING DIAGRAM
NO SCALE

E-145

	DATE	REVISED BY	DATE	REVISED
CALCULATED/DESIGNED BY	JP	09/01		
CHECKED BY	BL	11/01		

DESIGN OVERSIGHT
BEHZAD GOLEMOHAMMADI

STATE OF CALIFORNIA - DEPARTMENT OF TRANSPORTATION
Caltrans

LAST REVISION 11-16-12
DATE PLOTTED => 6/26/2013
TIME PLOTTED => 10:21:09 AM

FOR REDUCED PLANS ORIGINAL SCALE IS IN MILLIMETERS 0 20 40 60 80

DGN FILE =>04-0120f1_0196R02.dgn
USERNAME =>Melsheimer

CU 04251 | EA 0120F1

DIST	COUNTY	ROUTE	KILOMETER POST TOTAL PROJECT	SHEET No	TOTAL SHEETS
04	SF	80	13.2/13.9	207 S1R1	1208

REGISTERED ELECTRICAL ENGINEER 9/18/2007 DATE

PLANS APPROVAL DATE

REGISTERED PROFESSIONAL ENGINEER MARCELL FUNTO TAKAKI No. E 8651 Exp. 9/30/2008 ELECTRICAL STATE OF CALIFORNIA

PB AMERICAS, Inc.
A Parsons Brinckerhoff Company
303 Second St., Suite 700N
San Francisco, CA 94107-1317

The State of California or its officers or agents shall not be responsible for the accuracy or completeness of electronic copies of this plan sheet.

Caltrans now has a web site! To get to the web site, go to http://www.dot.ca.gov

Caltrans Metric

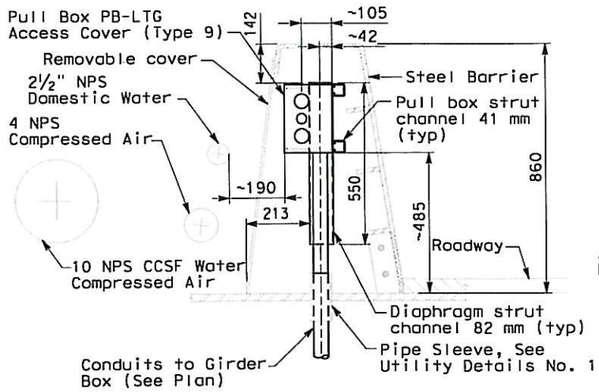

SECTION B-B

TYPICAL PULL BOX PB-LTG AND CONDUIT LOCATION (E5)
(E2) (SIMILAR)
SCALE 1:10

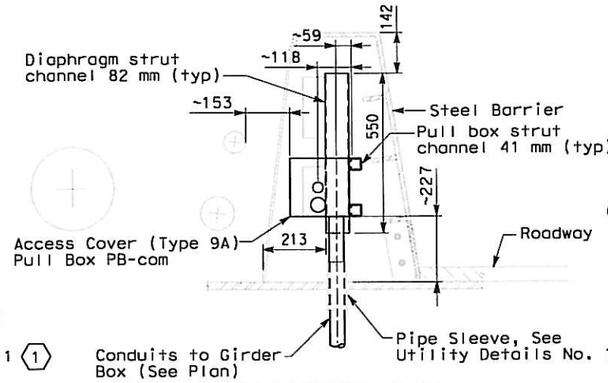

SECTION C-C

TYPICAL PULL BOX PB-COM AND CONDUIT LOCATION (E5)
(E2) (SIMILAR)
SCALE 1:10

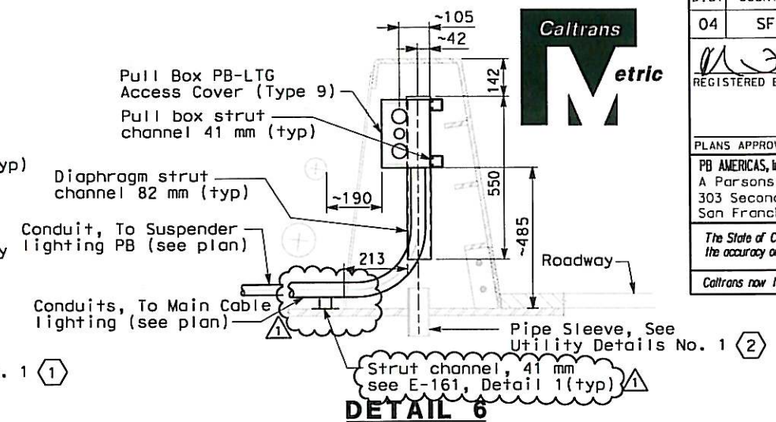

DETAIL 6

TYPICAL CONDUIT LOCATION FROM PULL BOX PB-LTG TO SUSPENDER AND MAIN CABLE LIGHTING (E5)
(E2) (SIMILAR)
SCALE 1:10

REGISTERED PROFESSIONAL ENGINEER SAFIUDDIN A. MOHAMMED No. 71694 CIVIL STATE OF CALIFORNIA

FOR REVISION ONLY

REQUEST FOR INFORMATION NOT ADDRESSED IN THIS CCO REMAIN IN FORCE					
1	06/25/13	ROADWAY LEVEL LED FIXTURE DETAILS	TH	AM	252
0	03/04/08	BARRIER MODIFICATIONS	JS BM	RG SE	44
MARK	DATE	DESCRIPTIONS	BY	CH'D	CCO#
		REVISIONS			

CONTRACT CHANGE ORDER NO. 252
SHEET 21 OF 44

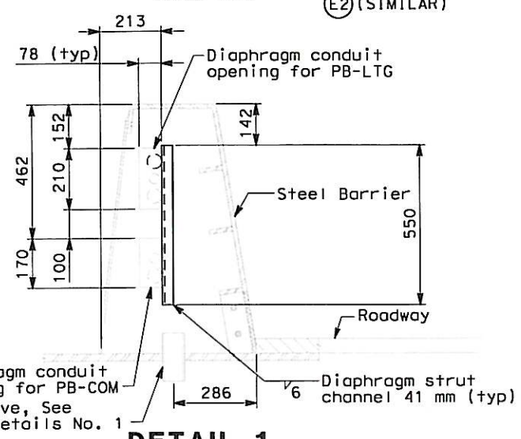

DETAIL 1

TYPICAL CONDUIT SUPPORT THROUGH DIAPHRAGM (E2)
SCALE 1:10

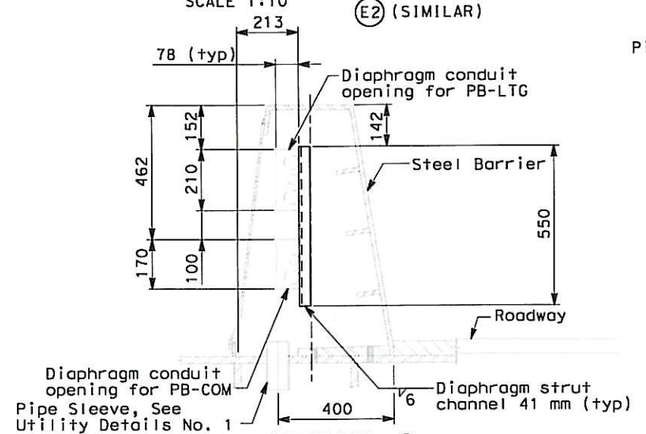

DETAIL 2

TYPICAL CONDUIT SUPPORT THROUGH DIAPHRAGM (E5)
SCALE 1:10

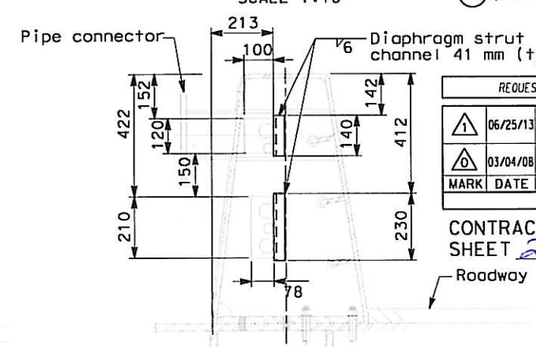

DETAIL 3

AT BARRIER WITH MOUNTED SIGNS
CONDUIT SUPPORT DIAPHRAGM E5 (PP38 + 1.250)
CONDUIT SUPPORT DIAPHRAGM E2 (PP38 + 1.250)
SCALE 1:10

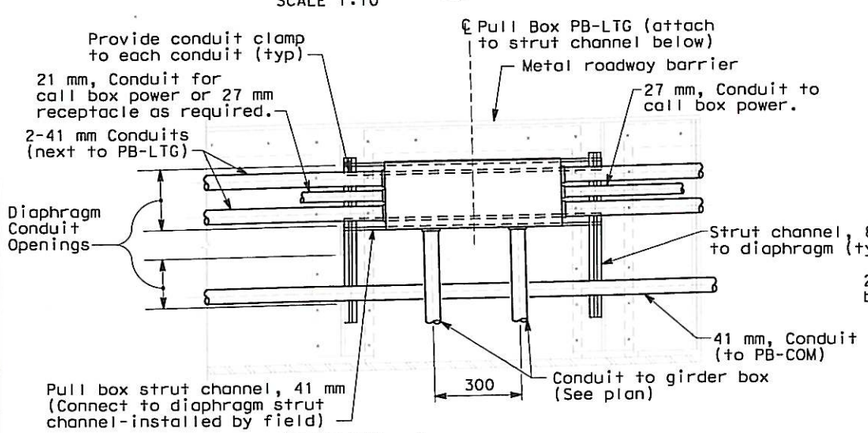

DETAIL 4

TYPICAL CONDUIT SUPPORT PULL BOX PB-LTG MOUNTING
SCALE 1:10

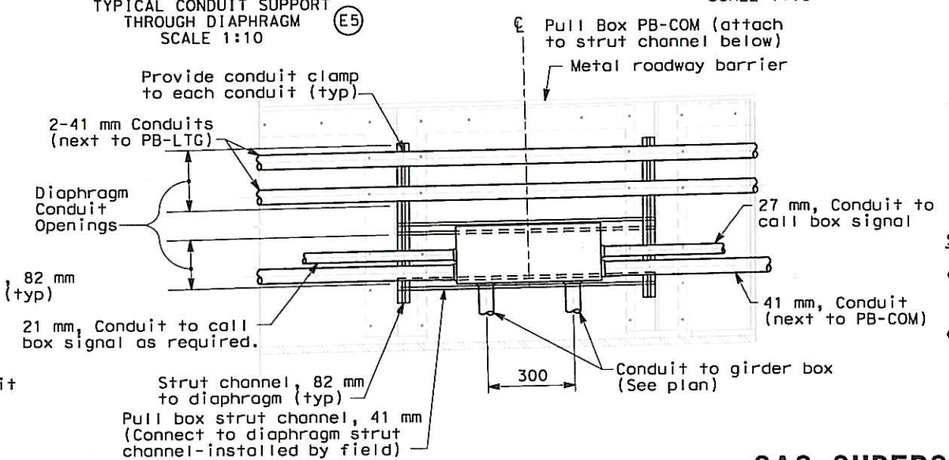

DETAIL 5

TYPICAL CONDUIT SUPPORT PULL BOX PB-COM MOUNTING
SCALE 1:10

NOTES:

1. References:
   - For pull box schedule, see Sheet E-169.
   - For barrier details, see structural drawings.
2. For location of pull boxes inside girder, see Sheet E-135 through E-140.

SHEET NOTES:

(1) To prevent moisture from passing inside the sleeve, the Contractor shall install sealant between the sleeve and conduit.

(2) Spare pipe sleeves shall be capped on both ends.

DETAILS
SAS SUPERSTRUCTURE ROADWAY CONDUIT AND PULL BOX LOCATIONS

SCALE AS NOTED

E-160A

THIS PLAN IS ACCURATE FOR ELECTRICAL WORK ONLY.

ALL DIMENSIONS ARE IN MILLIMETERS UNLESS OTHERWISE SHOWN.

FOR REDUCED PLANS ORIGINAL SCALE IS IN MILLIMETERS 0 20 40 60 80

DGN FILE =>04-0120f1_0207S01R01.dgn
USERNAME =>Melsheimer

CU 04251 | EA 0120F1

LAST REVISION 06-25-13 | DATE PLOTTED => 6/26/2013 TIME PLOTTED => 10:21:53 AM

REVISED BY	DATE REVISED
JS	09/07

CALCULATED/DESIGNED BY	DATE 09/07
CHECKED BY	RG 09/07

DESIGN OVERSIGHT
BEHZAD GOLEMOHAMMADI

STATE OF CALIFORNIA - DEPARTMENT OF TRANSPORTATION
Caltrans

DIST	COUNTY	ROUTE	KILOMETER POST TOTAL PROJECT	SHEET No	TOTAL SHEETS
04	SF	80	13.2/13.9	207 S3R3	1204

REGISTERED ELECTRICAL ENGINEER 02/11/10 DATE

PLANS APPROVAL DATE

REGISTERED PROFESSIONAL ENGINEER DAVID H. OTO No. 10699 Exp. 06/30/2011 ELECTRICAL STATE OF CALIFORNIA

PB AMERICAS, Inc.
A Parsons Brinckerhoff Company
303 Second St., Suite 700N
San Francisco, CA 94107-1317

The State of California or its officers or agents shall not be responsible for the accuracy or completeness of electronic copies of this plan sheet.

Caltrans now has a web site! To get to the web site, go to http://www.dot.ca.gov

Caltrans Metric

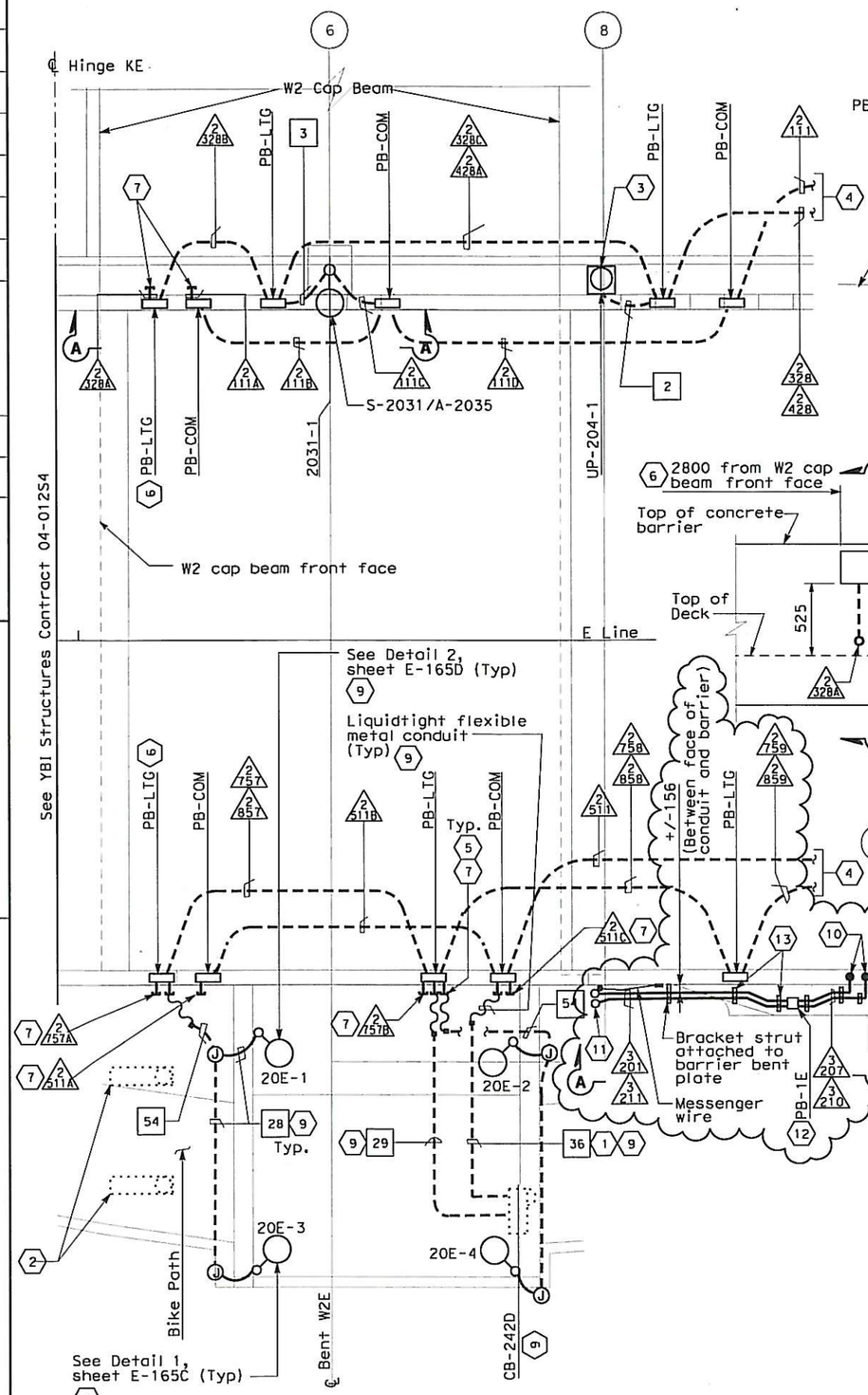

CONDUIT PLAN
SCALE: 1:100

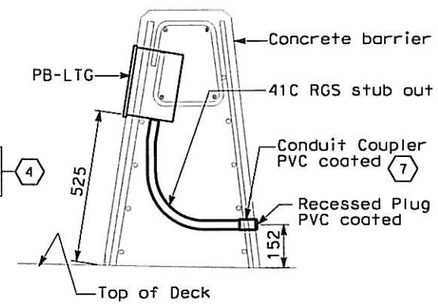

SECTION B-B
NO SCALE
Typical for PB-LTG in concrete barrier.

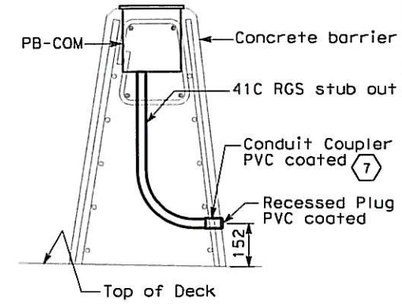

SECTION C-C
NO SCALE
Typical for PB-COM in concrete barrier.

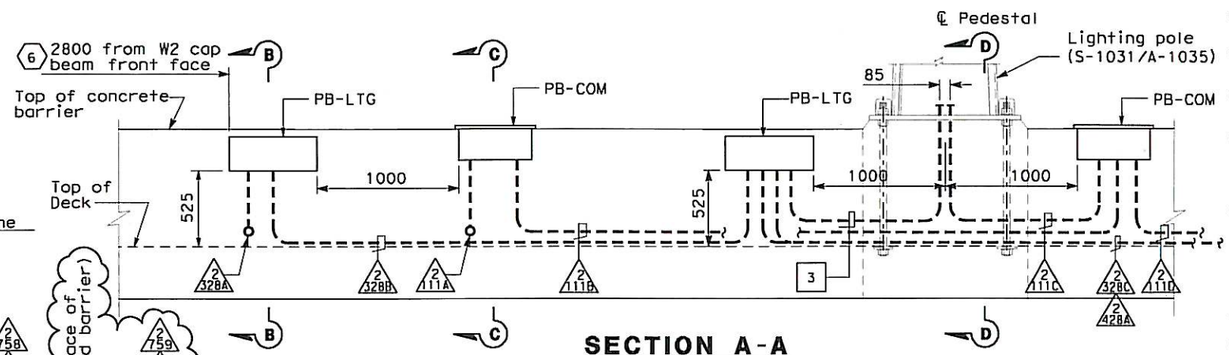

SECTION A-A
NO SCALE
Similar for installation of PB-LTG and PB-COM on south side concrete barrier.
Conduit routing varies, see conduit plan.

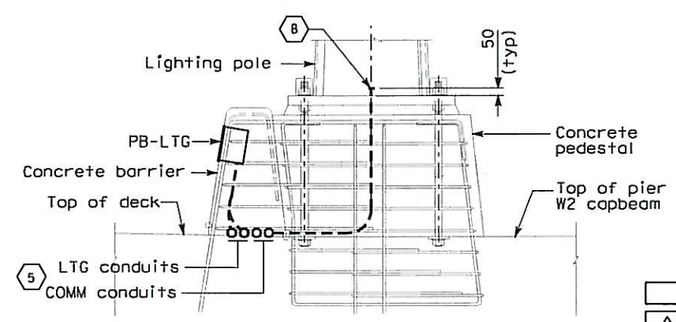

SECTION D-D
NO SCALE

SHEET NOTES:

1. Contractor shall coil 70 meters inside cable tray at PP15 for feed into PB-COM by others.
2. Railing lights are conrtractor furnished and installed by others.
3. Roadway Barrier Receptacle, see Detail 1, sheet E-68.
4. See drawing E-135 for continuation of conduits.
5. Conduit arrangement may be adjusted to suit field condition.
6. Contractor shall verify dimension and locate PB-LTG with sufficient distance to accommodate required clearance for the expansion joint.
7. Stub-out conduits are furnished and installed by Contractor. Conduit shall stub-out at the non-roadway side of the barrier with the coupler flushed to the barrier face wall and provided with plug.
8. Capped end of conduit stub-ups.
9. Bike path electrical components west of PP-9 are furnished by Contractor and installed by others.
10. Conduit from barrier pullbox or other equipment down into Girder, see sheet E-181.
11. For conduit to Suspend Lighting, see sheet E-226.
12. Locate pull box clear of all mechanical piping and any other obstructions. Contractor to maintain 51 mm clearance between conduits and cable railing post base.
13. Attach conduit support to OBG deck, see Detail 1 sheet E-161.

NOTES:

1. For additional general notes, see E135.

REGISTERED PROFESSIONAL ENGINEER DAVID H. OTO No. 10699 Exp. 06/30/2015 ELECTRICAL STATE OF CALIFORNIA 2 3
FOR REVISION ONLY

REGISTERED PROFESSIONAL ENGINEER SYH YEE CHIN No. 18186 Exp. 09/30/2011 ELECTRICAL STATE OF CALIFORNIA 1
FOR REVISION ONLY

REQUEST FOR INFORMATION NOT ADDRESSED IN THIS CCO REMAIN IN FORCE

MARK	DATE	DESCRIPTIONS	BY	CH'D	CCO#
3	06/25/13	ROADWAY LEVEL LED FIXTURE DETAILS	RR	RG	252
2	05/10/13	ELECTRICAL MOUNT AT BELVEDERE AND TOWER BASE	RR RSB	RG	270
1	06/11/10	BIKE PATH CONDUIT	TW	RG	73
0	02/19/10	WEST END BARRIER CONDUIT	TW	RG DO	44S1

REVISIONS

CONTRACT CHANGE ORDER NO. 252
SHEET 22 OF 44

DETAILS
SAS SUPERSTRUCTURE ROADWAY EASTBOUND CONDUIT AND PULL BOX LOCATIONS
SCALE AS NOTED

E-160C

CALCULATED/ DESIGNED BY	RG	DATE 6-09	REVISED BY
CHECKED BY	FW	6-09	DATE REVISED

DESIGN OVERSIGHT: BEHZAD GOLEMOHAMMADI

STATE OF CALIFORNIA - DEPARTMENT OF TRANSPORTATION

Caltrans

LAST REVISION 06-25-13 | DATE PLOTTED => 6/26/2013 TIME PLOTTED => 2:30:39 PM

THIS PLAN ACCURATE FOR ELECTRICAL WORK ONLY

ALL DIMENSIONS ARE IN MILLIMETERS UNLESS OTHERWISE SHOWN

FOR REDUCED PLANS ORIGINAL SCALE IS IN MILLIMETERS 0 20 40 60 80

DGN FILE =>04-0120F1_0207S03R03
USERNAME =>Llorico

CU 04251 | EA 0120F1

DIST	COUNTY	ROUTE	KILOMETER POST TOTAL PROJECT	SHEET No	TOTAL SHEETS
04	SF	80	13.2/13.9	207 S5	1204

REGISTERED ELECTRICAL ENGINEER 06/25/13 DATE

PLANS APPROVAL DATE

REGISTERED PROFESSIONAL ENGINEER DAVID H. OTO No. 10699 Exp. 06/30/2015 ELECTRICAL STATE OF CALIFORNIA

PB AMERICAS, Inc.
A Parsons Brinckerhoff Company
303 Second St., Suite 700N
San Francisco, CA 94107-1317

The State of California or its officers or agents shall not be responsible for the accuracy or completeness of electronic copies of this plan sheet.

Caltrans now has a web site! To get to the web site, go to http://www.dot.ca.gov

Caltrans Metric

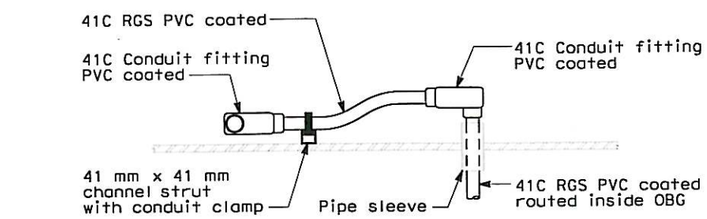

SECTION D-D

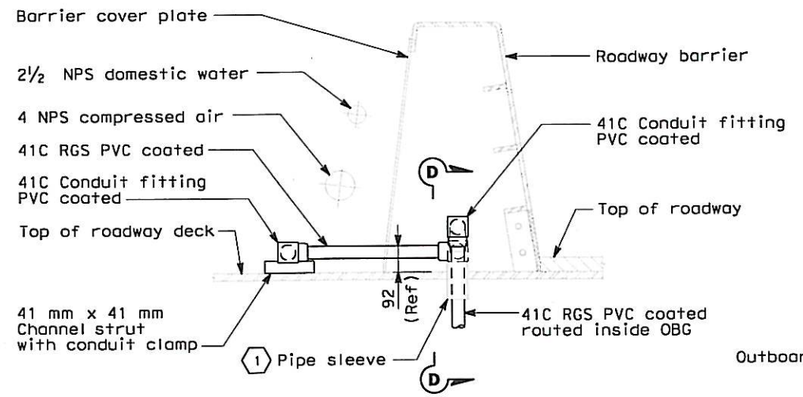

SECTION C-C

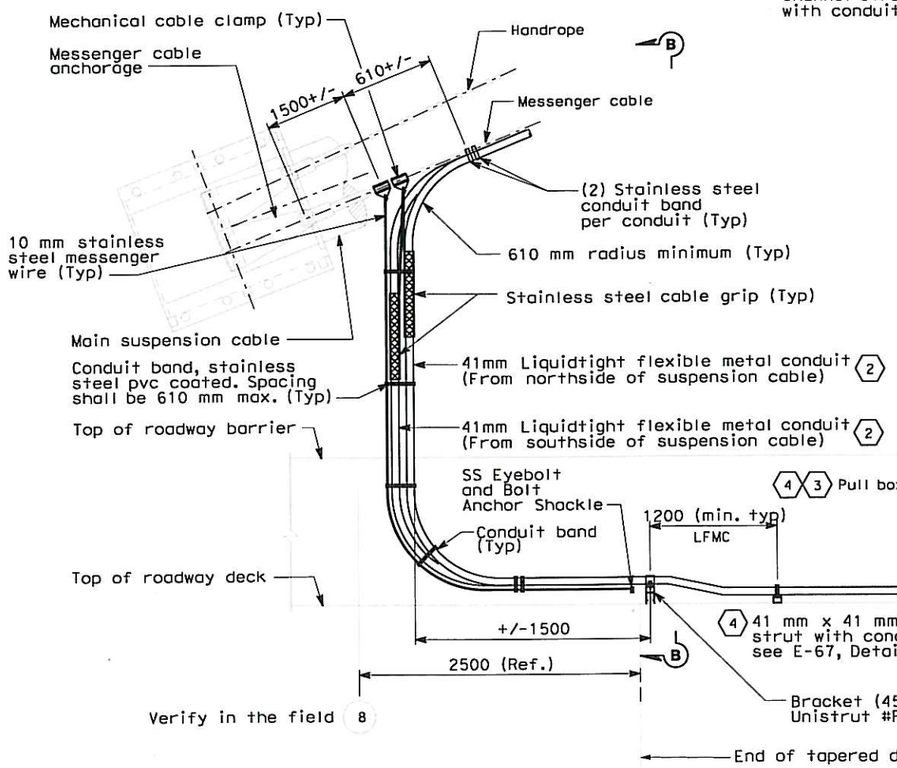

SECTION A-A

DETAIL OF CONDUIT DROP FROM MESSENGER CABLE
HANDROPE/MESSENGER ANCHORAGES AT PANEL POINT 8
WESTBOUND - ELEVATION LOOKING SOUTH

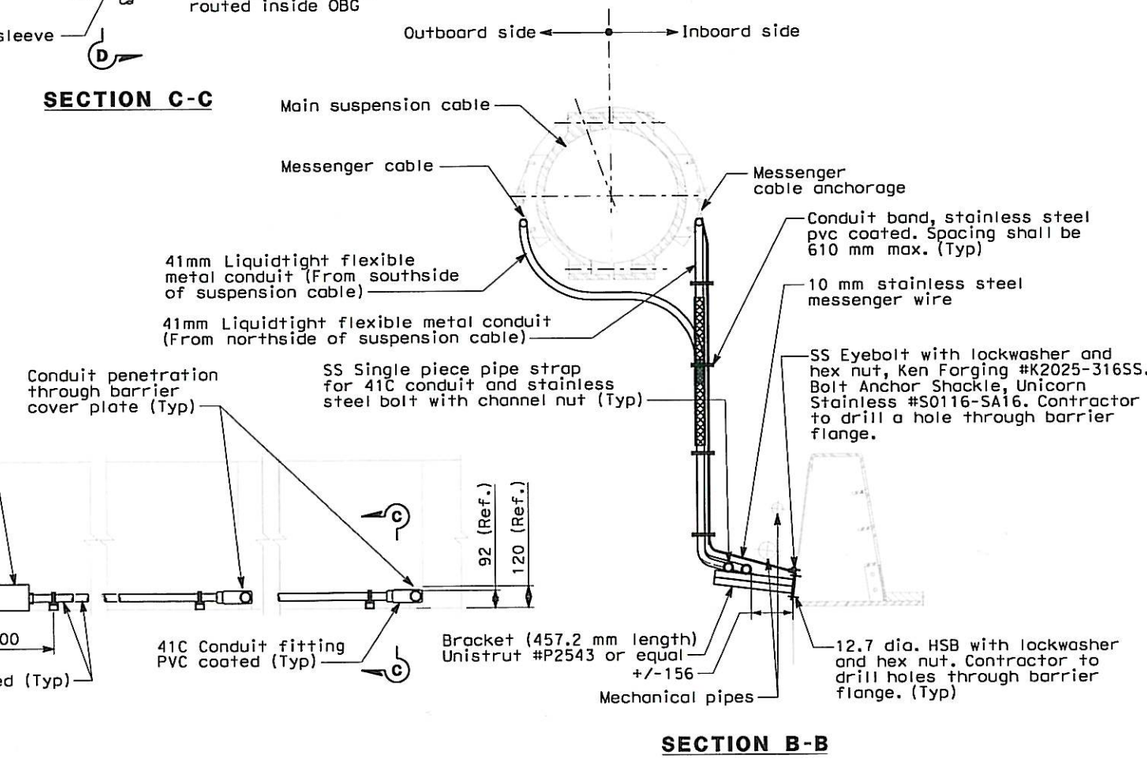

SECTION B-B

SHEET NOTES:

1. To prevent moisture from passing inside the sleeve, the Contractor shall install sealant between the sleeve and conduit.
2. For eastbound conduit drop see plan sheets E-135, E-139, E-161C, E-226 and E-230.
3. Mount pull box PB-1E on 41mm x 41mm channel strut, Unistrut #P1003 or equal.
4. A307 HDG bolts may be used in lieu of HSB for 12.7 mm or smaller diameter bolts for mounting supports.

REQUEST FOR INFORMATION NOT ADDRESSED IN THIS CCO REMAIN IN FORCE					
0	06/21/13	ROADWAY LEVEL LED FIXTURE DETAILS	TH RR	RG	252
MARK	DATE	DESCRIPTIONS	BY	CH'D	CCO#
REVISIONS					

CONTRACT CHANGE ORDER NO. 252
SHEET 23 OF 44

DETAILS
SAS SUPERSTRUCTURE ROADWAY EASTBOUND CONDUIT LOCATIONS
NO SCALE

E-160E

DATE	REVISED BY	DATE REVISED

CALCULATED/DESIGNED BY | CHECKED BY

DESIGN OVERSIGHT: BEHZAD GOLEMOHAMMADI

STATE OF CALIFORNIA - DEPARTMENT OF TRANSPORTATION

Caltrans

THIS PLAN ACCURATE FOR ELECTRICAL WORK ONLY.

ALL DIMENSIONS ARE IN MILLIMETERS UNLESS OTHERWISE SHOWN

FOR REDUCED PLANS ORIGINAL SCALE IS IN MILLIMETERS 0 20 40 60 80

DGN FILE =>04-0120F1_0207S05.dgn
USERNAME =>Meisheimer

CU 04251 | EA 0120F1

LAST REVISION 00-00-00 | DATE PLOTTED => 6/26/2013 TIME PLOTTED => 10:23:03 AM

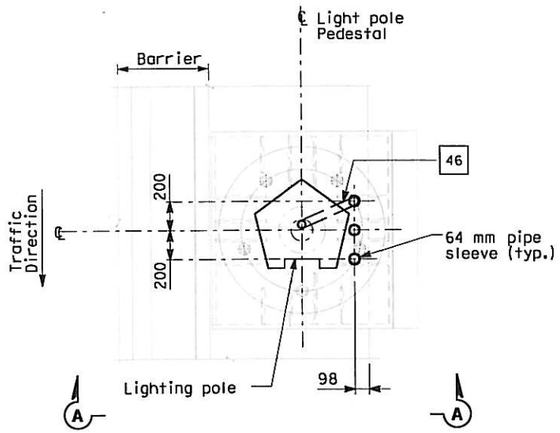

PLAN

CONDUIT STUB-UP PLAN FOR ROADWAY LIGHTING ON A METAL BASE
SCALE 1:20

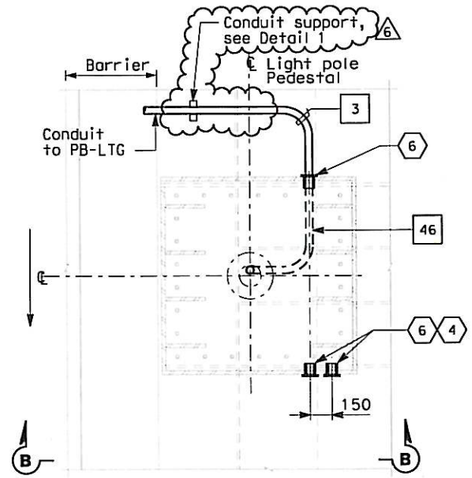

PLAN

CONDUIT STUB-UP PLAN FOR ROADWAY LIGHTING ON A METAL BASE AT PIER E2 ONLY
SCALE 1:20

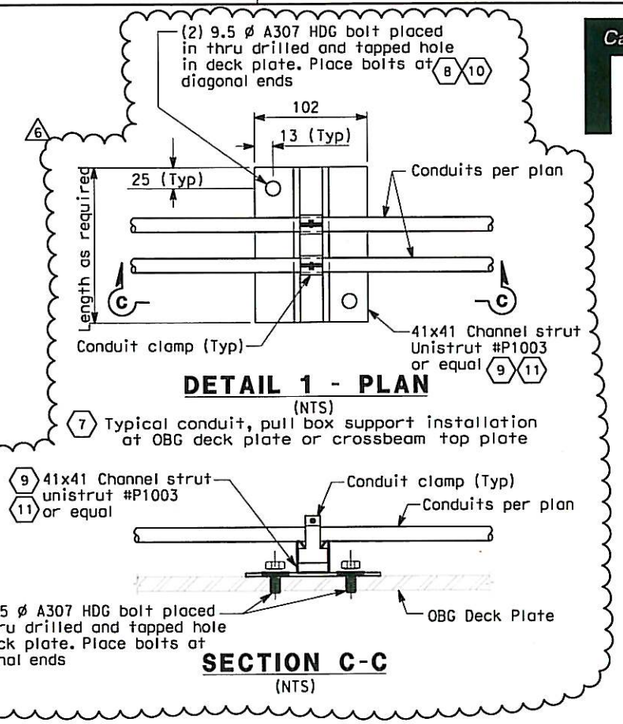

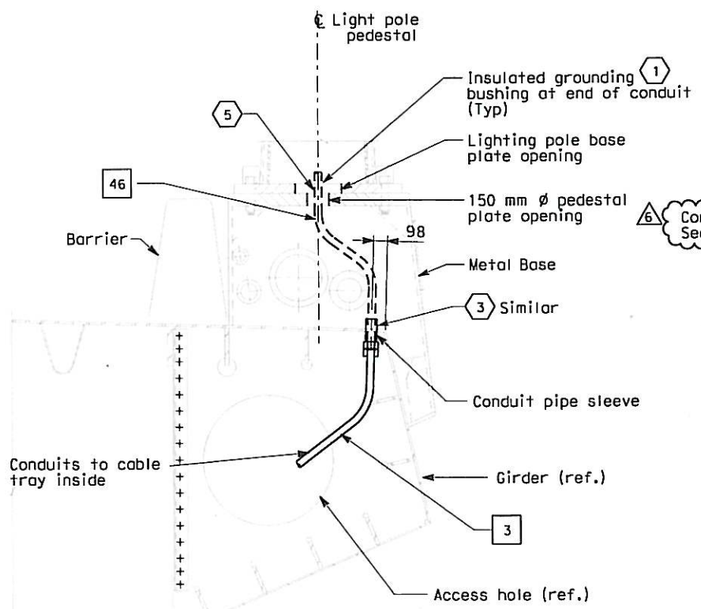

SECTION A-A

LIGHT POLE METAL PEDESTAL
CONDUIT TYPICAL INSTALLATION
SCALE 1:20

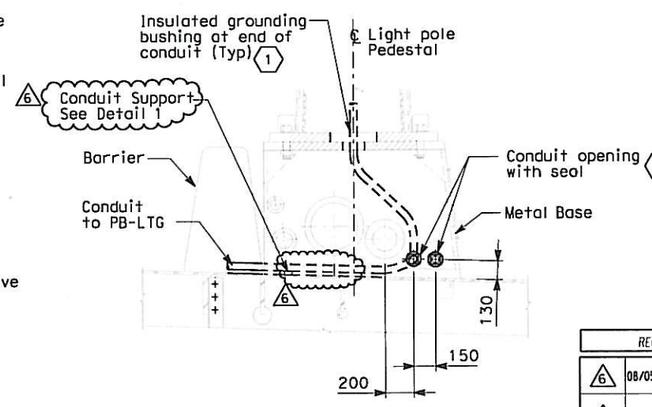

SECTION B-B

SCALE 1:20

NOTES:

1. References:
   - For lighting pole schedule, see sheet E-82.
   - For location of pull boxes inside girder, see sheets E-96 thru E-101.
   - For luminaire support details, see structural sheets.
2. Roadway Barrier Receptacle, see Detail 1, sheet E-68.
3. For conduit and pull box details in steel barrier, see drawings E-160 and E-160A.
4. Conduit support spacing shall be as noted in the contract plan sheets. (6)

SHEET NOTES:

1. Bond grounding bushing to ground lug of lighting pole with #6 bare copper wire.
2. Deleted.
3. See Utility Detail No. 1 (Sheet No. 965 of 1204) for conduit penetration through girder plate and lighting pole metal base. The Contractor shall install sealant between the sleeve and conduit to prevent water or moisture from passing inside the sleeve.
4. Plug spare penetrations for future use where noted. Contractor shall use Roxtec Seal #HO-(60/66)/0/60 AISI 316 (Part #5H0000007383) or equal.
5. Ensure that the maximum of three conduits passing through the 150 mm ø pedestal plate opening are separated as much as possible from each other.
6. Contractor to use appropriate conduit opening to suit field condition for conduit routing purposes. Contractor shall use Roxtec RS Seals or equal to seal conduit gap.
7. (6) Channel Struts supporting pull boxes at OBG deck plate/crossbeam top plate shall be attached similar to conduit support channel strut as shown in Detail 1. All channel struts shall be 12Ga nominal thickness.
8. Contractor shall caulk around the perimeter of the channel strut bottom plate and around the bolt heads.
9. All channel struts attached to OBG deck plate/crossbeam top plate shall be hot-dipped galvanized and painted to match the "bridge color".
10. Bolts installed in the OBG deck plate/crossbeam top plate shall clear internal members/stiffners by a minimum distance of 50mm. Bolts shall not be placed within 50mm of the edge of the OBG deck plate/crossbeam top plate.
11. (6) In lieu of Unistrut #P1003 type channel strut, Contractor has an option to use 41x41 channel strut (#P1000, 12 Ga or equal) spot welded to 6.4mm thick x 102 wide plate. Welds shall be located at each end and at 76mm max. on center. The assembly shall be hot-dipped galvanized after fabrication.

REQUEST FOR INFORMATION NOT ADDRESSED IN THIS CCO REMAIN IN FORCE					
6	08/05/13	ROADWAY LEVEL LED FIXTURE DETAILS	TH	AM	252
5	02/08/13	ADDITIONAL SAS/SKYWAY MISCELLANEOUS ELECTRICAL CHANGES	RSB	RG	191S1
4	10/10/08	LIGHTING REVISIONS	RY AG	RG FW	43
3	03/04/08	BARRIER MODIFICATIONS	JS BM	SE RG	44
2	02/19/08	ELECTRICAL MODIFICATIONS	MP EL RG	RR	42
1	10/16/06	REVISED SHEET NOTES	LR	MG	11
MARK	DATE	DESCRIPTIONS	BY	CH'D	CCO#

REVISIONS

CONTRACT CHANGE ORDER NO. 252
SHEET 24 OF 44

REGISTERED PROFESSIONAL ENGINEER MARCELL FUMIO TAKAI No. E 8651 Exp. 9/30/2008 ELECTRICAL STATE OF CALIFORNIA — 1 2 — FOR REVISION ONLY

REGISTERED PROFESSIONAL ENGINEER S. A. ESTOOLE, JR. No. E-10151 Exp. 12/31/2008 ELECTRICAL STATE OF CALIFORNIA — 3 — FOR REVISION ONLY

REGISTERED PROFESSIONAL ENGINEER FADI WALIEDDINE No. 11465 Exp. 12/31/2009 ELECTRICAL STATE OF CALIFORNIA — 4 — FOR REVISION ONLY

REGISTERED PROFESSIONAL ENGINEER DAVID H. OTO No. 10699 Exp. 06/30/2013 ELECTRICAL STATE OF CALIFORNIA — 5 — FOR REVISION ONLY

REGISTERED PROFESSIONAL ENGINEER SAFIUDDIN A. MOHAMMED No. 71694 CIVIL STATE OF CALIFORNIA — 6 — FOR REVISION ONLY

Caltrans Metric

DIST	COUNTY	ROUTE	KILOMETER POST TOTAL PROJECT	SHEET No	TOTAL SHEETS
04	SF	80	13.2/13.9	208 R6	1208

REGISTERED ELECTRICAL ENGINEER 12/19/02 DATE
12-6-04
PLANS APPROVAL DATE

REGISTERED PROFESSIONAL ENGINEER JENS ERLINGSSON No. 8249 Exp. 9/30/06 ELECTRICAL STATE OF CALIFORNIA

PB POWER, Inc.
A Parsons Brinckerhoff Company
303 Second St., Suite 700N
San Francisco, CA 94107-1317

The State of California or its officers or agents shall not be responsible for the accuracy or completeness of electronic copies of this plan sheet.

Caltrans now has a web site! To get to the web site, go to http://www.dot.ca.gov

DETAILS

SAS SUPERSTRUCTURE ROADWAY EASTBOUND CONDUIT LOCATIONS

SCALE AS NOTED

E-161

STATE OF CALIFORNIA - DEPARTMENT OF TRANSPORTATION
Caltrans

DESIGN OVERSIGHT: BEHZAD GOLEMOHAMMADI

CALCULATED/DESIGNED BY	KG	DATE 10/01	REVISED BY
CHECKED BY	AB	11/01	DATE REVISED

THIS PLAN IS ACCURATE FOR ELECTRICAL WORK ONLY.

ALL DIMENSIONS ARE IN MILLIMETERS UNLESS OTHERWISE SHOWN.

FOR REDUCED PLANS ORIGINAL SCALE IS IN MILLIMETERS 0 20 40 60 80

DGN FILE =>04-0120F1_0208R06.dgn
USERNAME =>Melsheimer

CU 04251 | EA 0120F1

LAST REVISION 08-02-13
DATE PLOTTED => 8/5/2013
TIME PLOTTED => 11:57:33 AM

DIST	COUNTY	ROUTE	KILOMETER POST TOTAL PROJECT	SHEET No	TOTAL SHEETS
04	SF	80	13.2/13.9	208 S1R2	1208

REGISTERED ELECTRICAL ENGINEER 10/10/08 DATE

PLANS APPROVAL DATE

REGISTERED PROFESSIONAL ENGINEER FADI WALIEDDINE No. 11465 Exp. 12/31/2009 ELECTRICAL STATE OF CALIFORNIA

PB AMERICAS, Inc.
A Parsons Brinckerhoff Company
303 Second St., Suite 700N
San Francisco, CA 94107-1317

The State of California or its officers or agents shall not be responsible for the accuracy or completeness of electronic copies of this plan sheet.

Caltrans now has a web site! To get to the web site, go to http://www.dot.ca.gov

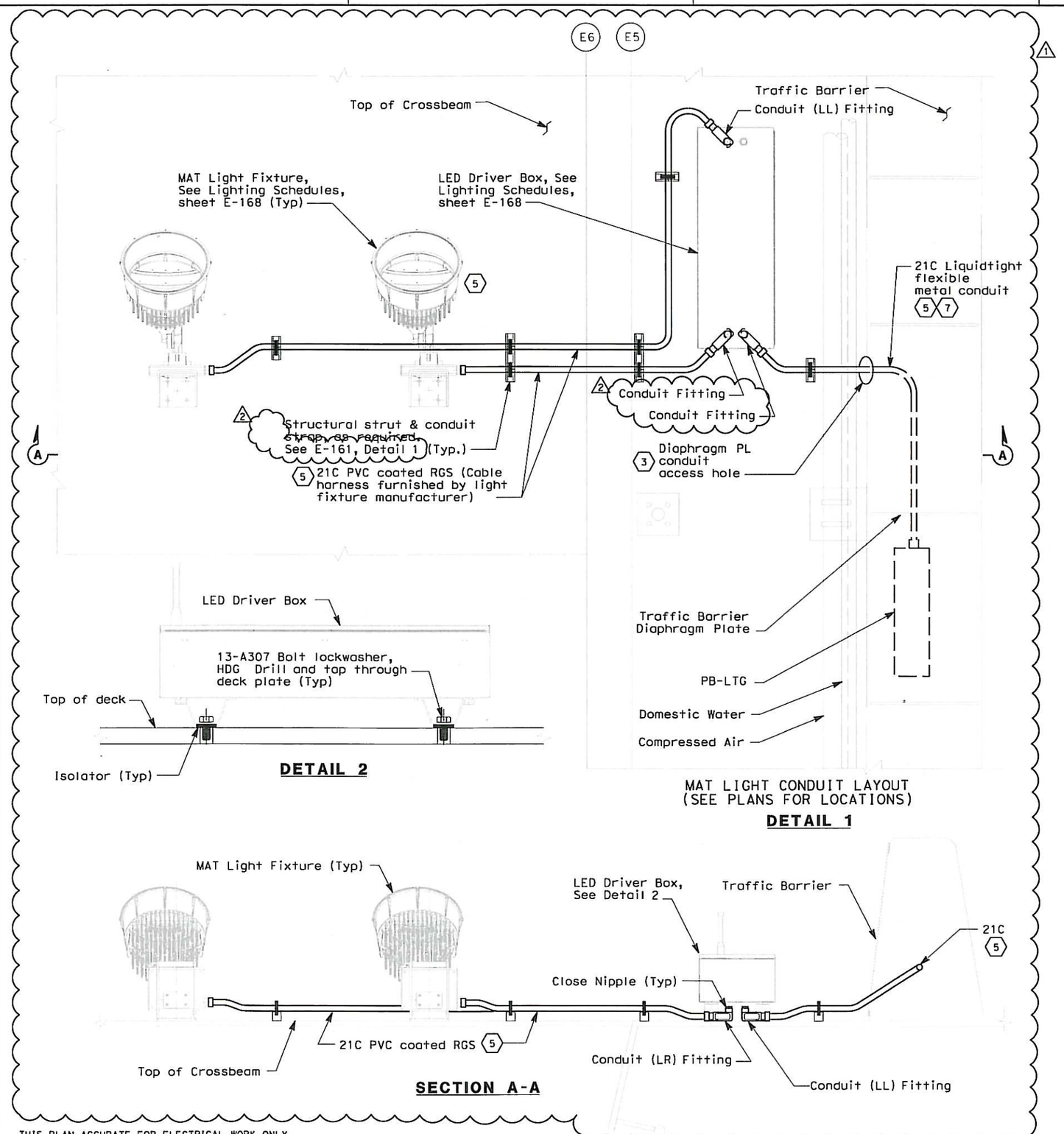

THIS PLAN ACCURATE FOR ELECTRICAL WORK ONLY.

SHEET NOTES:

1 2 (1) Deleted.

(2) Deleted.

1

(3) Conduit access hole per Sheet 472R2, Section A-A, Note 8.

(4) Deleted.

(5) Routing of conductors and conduits between PB-LTG enclosures, MAT fixtures, and LED driver boxes servicing MAT fixtures shall be determined by Contractor. At Contractor's option, conductors between LED driver boxes and MAT fixtures may be routed through PB-LTG conduits. If this option is exercised, Contractor shall inform Engineer's Field Representative of the as-built routing of these conductors.

(6) Deleted.

1

(7) 2#10 + #10G and #10 bare copper wire.

REGISTERED PROFESSIONAL ENGINEER DAVID H. OTO No. 10699 Exp. 06/30/2013 ELECTRICAL STATE OF CALIFORNIA 1

FOR REVISION ONLY

REGISTERED PROFESSIONAL ENGINEER SAFIUDDIN A. MOHAMED No. 71894 CIVIL STATE OF CALIFORNIA 2

FOR REVISION ONLY

REQUEST FOR INFORMATION NOT ADDRESSED IN THIS CCO REMAIN IN FORCE

MARK	DATE	DESCRIPTIONS	BY	CH'D	CCO#
2	08/05/13	ROADWAY LEVEL LED FIXTURE DETAILS	TH	AM	252
1	11/16/12	ROADWAY LEVEL LED FIXTURE DETAILS	RR	RG	252
0	10/10/08	LIGHTING REVISIONS	RY AG	RG FW	43

REVISIONS

CONTRACT CHANGE ORDER NO. 252
SHEET 25 OF 44

DETAILS
SAS SUPERSTRUCTURE ROADWAY EASTBOUND CONDUIT LOCATIONS

SCALE: NONE

E-161A

STATE OF CALIFORNIA - DEPARTMENT OF TRANSPORTATION
Caltrans

DESIGN OVERSIGHT BEHZAD GOLEMOHAMMADI

CALCULATED/DESIGNED BY | CHECKED BY | DATE | REVISED BY | DATE REVISED

LAST REVISION 08-02-13 | DATE PLOTTED => 8/5/2013 TIME PLOTTED => 11:52:08 AM

FOR REDUCED PLANS ORIGINAL SCALE IS IN MILLIMETERS 0 20 40 60 80

DGN FILE =>04-0120f1_0208S01R02.dgn
USERNAME =>Melsheimer

CU 04251 | EA 0120F1

DIST	COUNTY	ROUTE	KILOMETER POST TOTAL PROJECT	SHEET No	TOTAL SHEETS
04	SF	80	13.2/13.9	208 S2R2	1208

REGISTERED ELECTRICAL ENGINEER 10/10/08 DATE

PLANS APPROVAL DATE

REGISTERED PROFESSIONAL ENGINEER FADI WALIEDDINE No. 11465 Exp. 12/31/2009 ELECTRICAL STATE OF CALIFORNIA

PB AMERICAS, Inc.
A Parsons Brinckerhoff Company
303 Second St., Suite 700N
San Francisco, CA 94107-1317

The State of California or its officers or agents shall not be responsible for the accuracy or completeness of electronic copies of this plan sheet.

Caltrans now has a web site! To get to the web site, go to http://www.dot.ca.gov

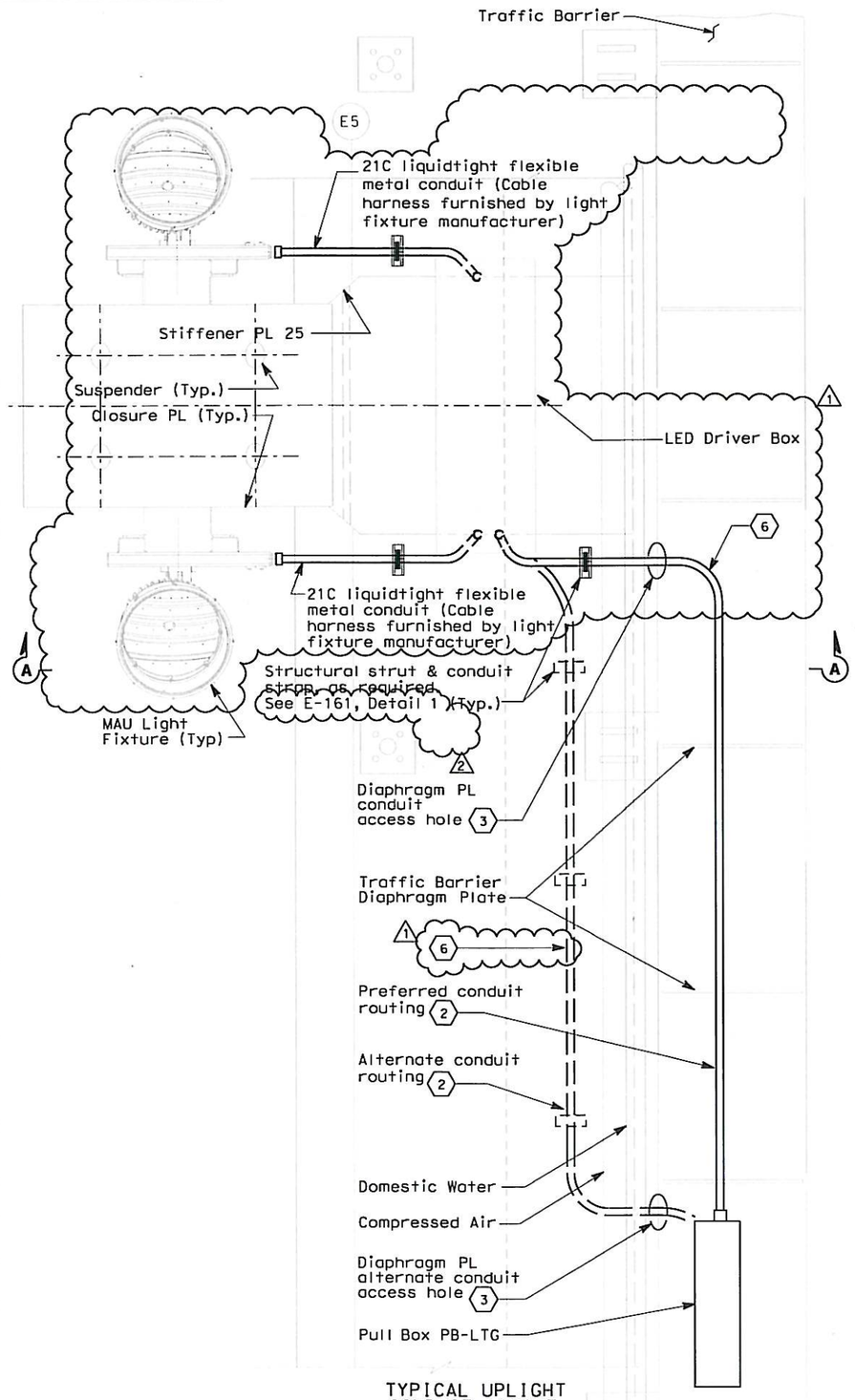

TYPICAL UPLIGHT CONDUIT LAYOUT

DETAIL 1

SCALE 1:20

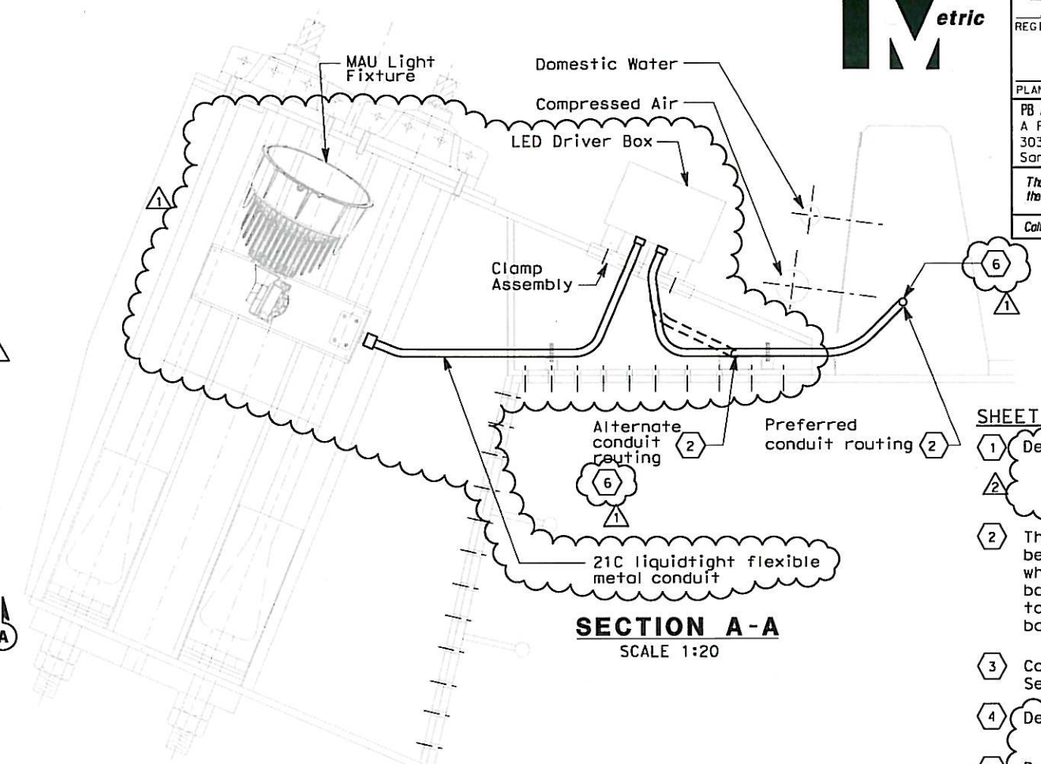

SECTION A-A

SCALE 1:20

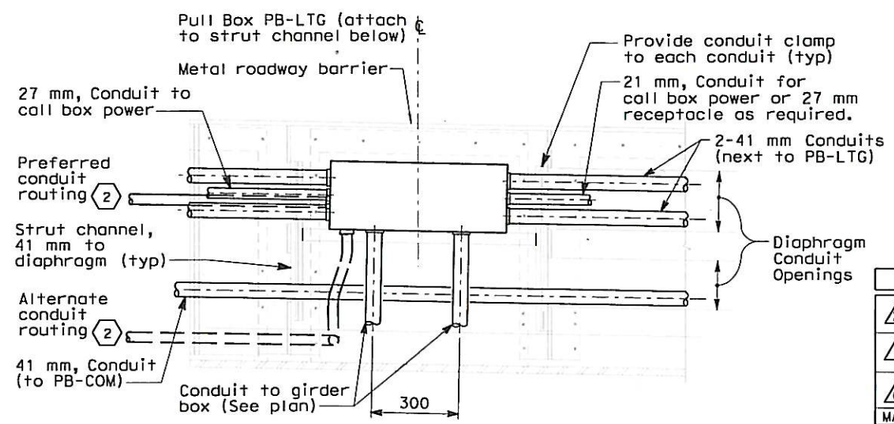

DETAIL 2

TYPICAL CONDUIT SUPPORT
PULL BOX PB-LTG MOUNTING
SCALE 1:10

SHEET NOTES:

1. Deleted.
2. The preferred conduit routing shall be utilized where possible. At locations where there is no space through the barrier diaphragm plate route conduit to PB-LTG pull box outside the barrier using the alternate path.
3. Conduit access hole per Sheet 472R2, Section A-A, Note 8.
4. Deleted.
5. Deleted.
6. 21C liquidtight flexible metal conduit with 2#10 + #10 G and #10 bare copper wire.

REGISTERED PROFESSIONAL ENGINEER DAVID H. OTO No. 10699 Exp. 06/30/2013 ELECTRICAL STATE OF CALIFORNIA

FOR REVISION ONLY

REGISTERED PROFESSIONAL ENGINEER SAFIUDDIN A. MOHAMMED No. 71894 CIVIL STATE OF CALIFORNIA

FOR REVISION ONLY

REQUEST FOR INFORMATION NOT ADDRESSED IN THIS CCO REMAIN IN FORCE

MARK	DATE	DESCRIPTIONS	BY	CH'D	CCO#
2	06/25/13	ROADWAY LEVEL LED FIXTURE DETAILS	TH	AM	252
1	11/16/12	ROADWAY LEVEL LED FIXTURE DETAILS	RR	RG	252
0	10/10/08	LIGHTING REVISIONS	RY AG	RG FW	43

REVISIONS

CONTRACT CHANGE ORDER NO. 252
SHEET 26 OF 44

DETAILS
SAS SUPERSTRUCTURE ROADWAY EASTBOUND CONDUIT LOCATIONS

SCALE AS NOTED

E-161B

STATE OF CALIFORNIA - DEPARTMENT OF TRANSPORTATION

Caltrans

DESIGN OVERSIGHT: BEHZAD GOLEMOHAMMADI

CALCULATED/DESIGNED BY | CHECKED BY | DATE REVISED BY | DATE REVISED

THIS PLAN ACCURATE FOR ELECTRICAL WORK ONLY.

ALL DIMENSIONS ARE IN MILLIMETERS UNLESS OTHERWISE SHOWN

FOR REDUCED PLANS ORIGINAL SCALE IS IN MILLIMETERS 0 20 40 60 80

DGN FILE =>04-0120F1_0208S02R02.dgn
USERNAME =>Meisheimer

CU 04251 | EA 0120F1

LAST REVISION 06-25-13 | DATE PLOTTED => 6/26/2013 TIME PLOTTED => 10:25:32 AM

DIST	COUNTY	ROUTE	KILOMETER POST TOTAL PROJECT	SHEET No	TOTAL SHEETS
04	SF	80	13.2/13.9	208 S3R1	1204

Caltrans Metric

REGISTERED ELECTRICAL ENGINEER 11/16/12 DATE

PLANS APPROVAL DATE

REGISTERED PROFESSIONAL ENGINEER DAVID H. OTO No. 10699 Exp. 06/30/2013 ELECTRICAL STATE OF CALIFORNIA

PB AMERICAS, Inc.
A Parsons Brinckerhoff Company
303 Second St., Suite 700N
San Francisco, CA 94107-1317

The State of California or its officers or agents shall not be responsible for the accuracy or completeness of electronic copies of this plan sheet.

Caltrans now has a web site! To get to the web site, go to http://www.dot.ca.gov

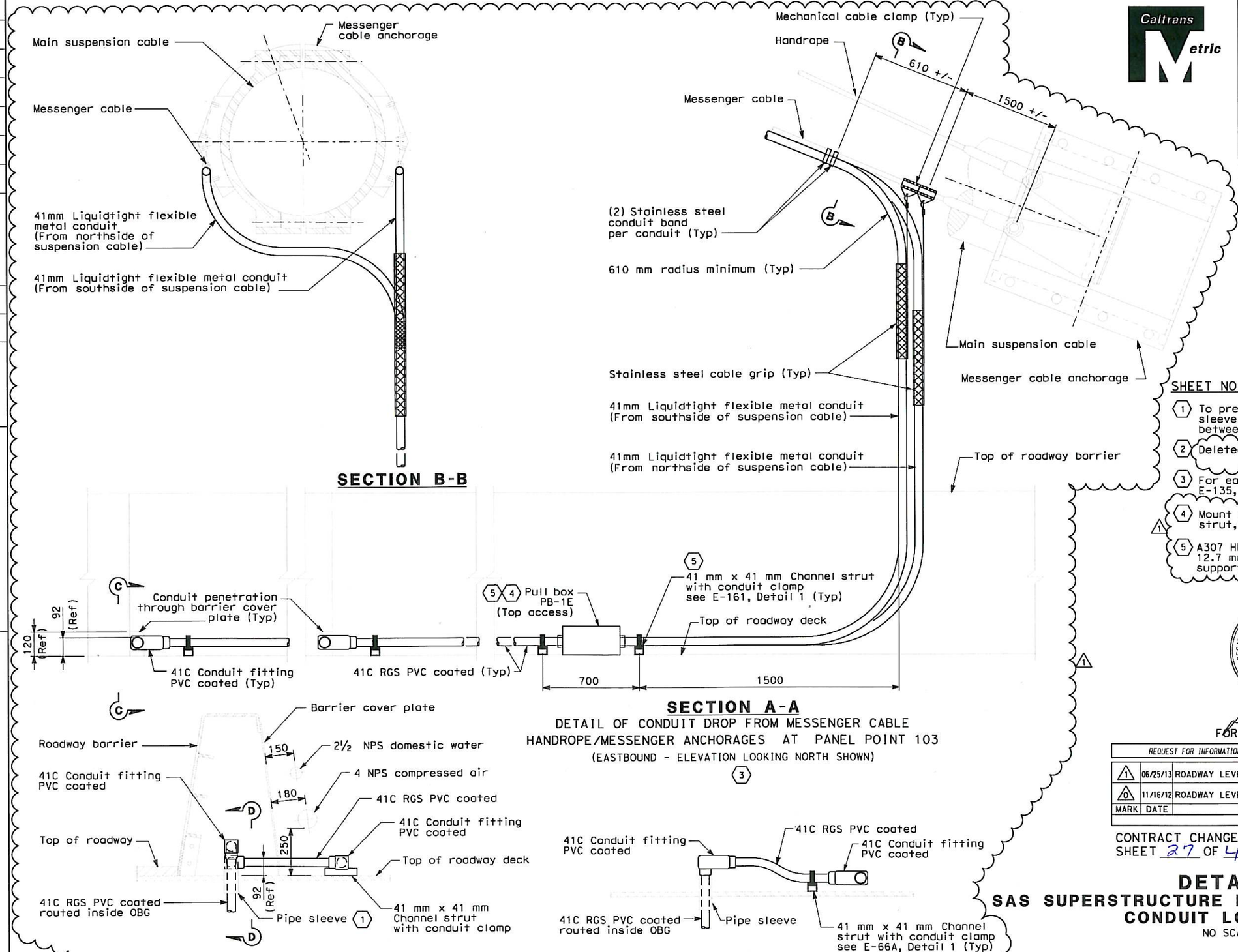

SHEET NOTES:

1. To prevent moisture from passing inside the sleeve, the Contractor shall install sealant between the sleeve and conduit.
2. Deleted.
3. For eastbound conduit drop see plan sheets E-135, E-139, E-160E, E-226 and E-230.
4. Mount pull box PB-1E on 41mm x 41mm channel strut, Unistrut #P1003 or equal.
5. A307 HDG bolts may be used in lieu of HSB for 12.7 mm or smaller diameter bolts for mounting supports.

REGISTERED PROFESSIONAL ENGINEER DAVID H. OTO No. 10699 Exp. 06/30/2015 ELECTRICAL STATE OF CALIFORNIA

FOR REVISION ONLY

REQUEST FOR INFORMATION NOT ADDRESSED IN THIS CCO REMAIN IN FORCE

MARK	DATE	DESCRIPTIONS	BY	CH'D	CCO#
1	06/25/13	ROADWAY LEVEL LED FIXTURE DETAILS	RR	RG	252
0	11/16/12	ROADWAY LEVEL LED FIXTURE DETAILS	RR	RG	252

REVISIONS

CONTRACT CHANGE ORDER NO. 252
SHEET 27 OF 44

DETAILS
SAS SUPERSTRUCTURE ROADWAY EASTBOUND CONDUIT LOCATIONS
NO SCALE

E-161C

THIS PLAN ACCURATE FOR ELECTRICAL WORK ONLY.

ALL DIMENSIONS ARE IN MILLIMETERS UNLESS OTHERWISE SHOWN

FOR REDUCED PLANS ORIGINAL SCALE IS IN MILLIMETERS 0 20 40 60 80

DGN FILE =>04-0120f1_0208S03R01.dgn
USERNAME =>Melsheimer

CU 04251 | EA 0120F1

STATE OF CALIFORNIA - DEPARTMENT OF TRANSPORTATION
Caltrans

DESIGN OVERSIGHT: BEHZAD GOLEMOHAMMADI
CALCULATED/DESIGNED BY: XX | DATE: XX/12 | REVISED BY
CHECKED BY: XX | XX/12 | DATE REVISED

LAST REVISION 06-25-13
DATE PLOTTED => 6/26/2013
TIME PLOTTED => 10:26:16 AM

DIST	COUNTY	ROUTE	KILOMETER POST TOTAL PROJECT	SHEET No	TOTAL SHEETS
04	SF	80	13.2/13.9	211 R4	1204

REGISTERED ELECTRICAL ENGINEER 12/19/02 DATE

12-6-04
PLANS APPROVAL DATE

REGISTERED PROFESSIONAL ENGINEER JENS ERLINGSSON No. 8249 Exp. 9/30/06 ELECTRICAL STATE OF CALIFORNIA

PB POWER, Inc.
A Parsons Brinckerhoff Company
303 Second St., Suite 700N
San Francisco, CA 94107-1317

The State of California or its officers or agents shall not be responsible for the accuracy or completeness of electronic copies of this plan sheet.

Caltrans now has a web site! To get to the web site, go to http://www.dot.ca.gov

Caltrans Metric

TOWER LIGHTING FIXTURE SCHEDULE (ROADWAY LEVEL) EASTBOUND

Fixture Number	Fixture Type	Quantity and Max VA	Fixture Location to Center of Bolt Pattern: Panel Point	Fixture Location to Center of Bolt Pattern: Offset (Looking East)	Fixture Mount Type *	Fixture Mounting Method	Driver Box Size	Driver Box Location to Center of Bolt Pattern: Panel Point	Driver Box Location to Center of Bolt Pattern: Offset (Looking East)	Driver Box Mounting Method
A-3039-1	MAT	1-378	PP35-1000	185 Right of E5	Type 3A	Bolts through deck plate	675x360x229	PP34-2060	340 Left of E5	Drill and tap through deck plate
A-3039-2	MAT	1-378	PP35+1000	185 Right of E5	Type 3A	Bolts through deck plate	1061x360x229	PP34-620	340 Left of E5	Drill and tap through deck plate
A-3039-3	MAT	1-378	PP35+2000	185 Right of E5	Type 3A	Bolts through deck plate				
A-3039-4	MAT	1-378	PP37-3000	185 Right of E5	Type 3A	Bolts through deck plate	1061x360x229	PP38+620	340 Left of E5	Drill and tap through deck plate
A-3039-5	MAT	1-378	PP37-2000	185 Right of E5	Type 3A	Bolts through deck plate				
A-3039-6	MAT	1-187	PP39-1085	400 Left of E5	Type 2	Bolts through deck plate	1061x360x229	PP38+3125 (4)	340 Left of E5	Drill and tap through deck plate
A-3039-7	MAT	1-187	PP38+3125	1800 Left of E5	Type 2	Bolts through deck plate				
A-3039-8A	MAT	1-187	PP38+1875	2880 Left of E5	Type 2	Bolts through deck plate	1061x360x229	PP38+1875	340 Left of E5	Drill and tap through deck plate
A-3039-8B	MAT	1-187	PP38+1875	5360 Left of E5	Type 2	Bolts through deck plate				
A-3039-9	MAT	1-378	PP42-2700	1275 Right of E2	Type 5	Bolts to cantilevered bracket	1061x360x229	PP42-1250	550 Left of E2	Drill and tap through deck plate
A-3039-10	MAT	1-378	PP42-1000	1275 Right of E2	Type 5	Bolts to cantilevered bracket				
A-3039-11	MAT	1-187	PP42-300	1100 Right of E5	Type 4	Bolts to back of barrier	1061x360x229	PP40-620	340 Left of E5	Drill and tap through deck plate
A-3039-12	MAT	1-187	PP42-1200	1100 Right of E5	Type 4	Bolts to back of barrier				
A-3040-1	MAT	1-378	PP49+1000	185 Right of E5	Type 3A	Bolts through deck plate	675x360x229	PP50+2060	340 Left of E5	Drill and tap through deck plate
A-3040-2	MAT	1-378	PP49-1000	185 Right of E5	Type 3A	Bolts through deck plate	1061x360x229	PP50+620	340 Left of E5	Drill and tap through deck plate
A-3040-3	MAT	1-378	PP49-2000	185 Right of E5	Type 3A	Bolts through deck plate				
A-3040-4	MAT	1-378	PP47+3000	185 Right of E5	Type 3A	Bolts through deck plate	1061x360x229	PP46-620	340 Left of E5	Drill and tap through deck plate
A-3040-5	MAT	1-378	PP47+2000	185 Right of E5	Type 3A	Bolts through deck plate				
A-3040-6	MAT	1-187	PP45-1085	400 Left of E5	Type 2	Bolts through deck plate	1061x360x229	PP44+1875 (4)	340 Left of E5	Drill and tap through deck plate
A-3040-7	MAT	1-187	PP46-5625	1800 Left of E5	Type 2	Bolts through deck plate				
A-3040-8A	MAT	1-187	PP46-1875	2880 Left of E5	Type 2	Bolts through deck plate	1061x360x229	PP46-1875	340 Left of E5	Drill and tap through deck plate
A-3040-8B	MAT	1-187	PP46-1875	5360 Left of E5	Type 2	Bolts through deck plate				
A-3040-9	MAT	1-378	PP42+1700	1275 Right of E2	Type 5	Bolts to cantilevered bracket	1061x360x229	PP42+1250	550 Left of E2	Drill and tap through deck plate
A-3040-10	MAT	1-378	PP42+2600	1275 Right of E2	Type 5	Bolts to cantilevered bracket				
A-3040-11	MAT	1-187	PP42+300	1100 Right of E5	Type 4	Bolts to back of barrier	1061x360x229	PP44+620	340 Left of E5	Drill and tap through deck plate
A-3040-12	MAT	1-187	PP42+1200	1100 Right of E5	Type 4	Bolts to back of barrier				

* See Structural Plans For Information On Mount Types

(3)

LIGHTING POLE AND FIXTURE SCHEDULE

Circuit Number	Pole Number	Station	Location: Roadway side	Mounting Height (m)	Lighting Fixture Type	Luminaire Type and Quantity: Roadway Flood	Luminaire Type and Quantity: Marker Light	Power Consumption @25C, 480 V, 60 Hz: Roadway Avg Watts	Roadway Max VA	Marker Max Watts	Marker Max VA
S-2031	2031-1	55+98	North	20	MSR	7		778	1309		
A-2035					MAM		1			57	65
S-2031	2031-2	56+27.18	North	20	MSR	7		778	1309		
A-2035					MAM		1			57	65
S-2031	2031-3	60+00.82	North	20	MSR	7		778	1309		
A-2035					MAM		1			57	65
S-2031	2031-4	60+47.18	North	20	MSR	7		778	1309		
A-2035					MAM		1			57	65
S-2032	2032-1	61+01	North	20	MSR	7		778	1309		
A-2035					MAM		1			57	65
S-2032	2032-2	61+54	North	20	MSR	7		778	1309		
A-2035					MAM		1			57	65

(3)

BELVEDERE LIGHTING POLE AND FIXTURE SCHEDULE

Circuit Number	Pole Number	Location	Mounting Height (M)	Ltg. Fixture Type	Number/ Wattage
LP219-2	20E-1	Belvedere 20E	4.3	MSV	2-35 W
LP219-2	20E-2		4.3	MSV	2-35 W
LP219-4	20E-3		4.3	MSV	2-35 W
LP219-4	20E-4		4.3	MSV	2-35 W
LP223-6	22E-1	Belvedere 22E	4.3	MSV	2-35 W
LP223-6	22E-2		4.3	MSV	2-35 W
LP223-8	22E-3		4.3	MSV	2-35 W
LP223-8	22E-4		4.3	MSV	2-35 W

NOTES:

1. References:
   - For roadway level lighting wiring diagram, see sheets E-143 thru E-145.
   - For roadway level lighting conduit diagram, see sheets E-135 thru E-140.

REGISTERED PROFESSIONAL ENGINEER DAVID H. OTO No. 10699 Exp. 06/30/2013 ELECTRICAL STATE OF CALIFORNIA (3)(4)

FOR REVISION ONLY

REGISTERED PROFESSIONAL ENGINEER FADI WALIEDDINE No. 11465 Exp. 12/31/2009 ELECTRICAL STATE OF CALIFORNIA (1)(2)

FOR REVISION ONLY

LIGHTING FIXTURE TYPE DESIGNATION

Example: MSR = SAS Safety Roadway Light (3)

Location (Letter)		Function (Letter)		Application (Letter)	
M	SAS	A	Aesthetic	D	Downward floodlight
		S	Safety	U	Upward floodlight
				R	Roadway light
				T	Pylon floodlight
				M	Marker light
				P	Pylon marker light
				B	Bike path light
				V	Belvedere light
				L	Light pipe

(3)

BIKE PATH FIXTURE SCHEDULE

Location	Mounting	Ltg. Fixture Type	Number/ Wattage	Remarks
Bike Path Structure	Bike Path Railway	MSB	1-40 W	Compact Fluorescent

REQUEST FOR INFORMATION NOT ADDRESSED IN THIS CCO REMAIN IN FORCE

MARK	DATE	DESCRIPTIONS	BY	CH'D	CCO#
(4)	02/13/13	ROADWAY LEVEL LED FIXTURE DETAILS	RSB	RG	252
(3)	11/16/12	ROADWAY LEVEL LED FIXTURE DETAILS	RSB	RG	252
(2)	10/10/08	LIGHTING REVISIONS	SPO	RG SE	43
(1)	02/19/08	ELECTRICAL MODIFICATIONS	MP EL	RR	42

REVISIONS

CONTRACT CHANGE ORDER NO. 252
SHEET 28 OF 44

DETAILS
SAS SUPERSTRUCTURE ROADWAY EASTBOUND LIGHTING SCHEDULES
NO SCALE

E-168

DESIGN OVERSIGHT	BEHZAD GOLEMOHAMMADI	CALCULATED/ DESIGNED BY	JP
		CHECKED BY	BL
		DATE	09/01
		REVISED BY	10/01
		DATE REVISED	

STATE OF CALIFORNIA - DEPARTMENT OF TRANSPORTATION
Caltrans

LAST REVISION 11-16-12
DATE PLOTTED => 2/13/2013
TIME PLOTTED => 10:08:47 AM

FOR REDUCED PLANS ORIGINAL SCALE IS IN MILLIMETERS 0 20 40 60 80

DGN FILE =>T:\13103\MS\pse\SAS Struc\CCO\SAS CCO252\CCO Draft Submittals\CCO 252 Draft 2\04-0120f1_0211R04.dgn
USERNAME =>GarciaR

CU 04251 EA 0120F1

DIST	COUNTY	ROUTE	KILOMETER POST TOTAL PROJECT	SHEET No	TOTAL SHEETS
04	SF	80	13.2/13.9	244 R5	1204

REGISTERED ELECTRICAL ENGINEER 12/19/02 DATE

12-6-04
PLANS APPROVAL DATE

REGISTERED PROFESSIONAL ENGINEER JENS ERLINGSSON No. 8249 Exp. 9/30/06 ELECTRICAL STATE OF CALIFORNIA

PB POWER, Inc.
A Parsons Brinckerhoff Company
303 Second St., Suite 700N
San Francisco, CA 94107-1317

The State of California or its officers or agents shall not be responsible for the accuracy or completeness of electronic copies of this plan sheet.

Caltrans now has a web site! To get to the web site, go to http://www.dot.ca.gov

Caltrans Metric

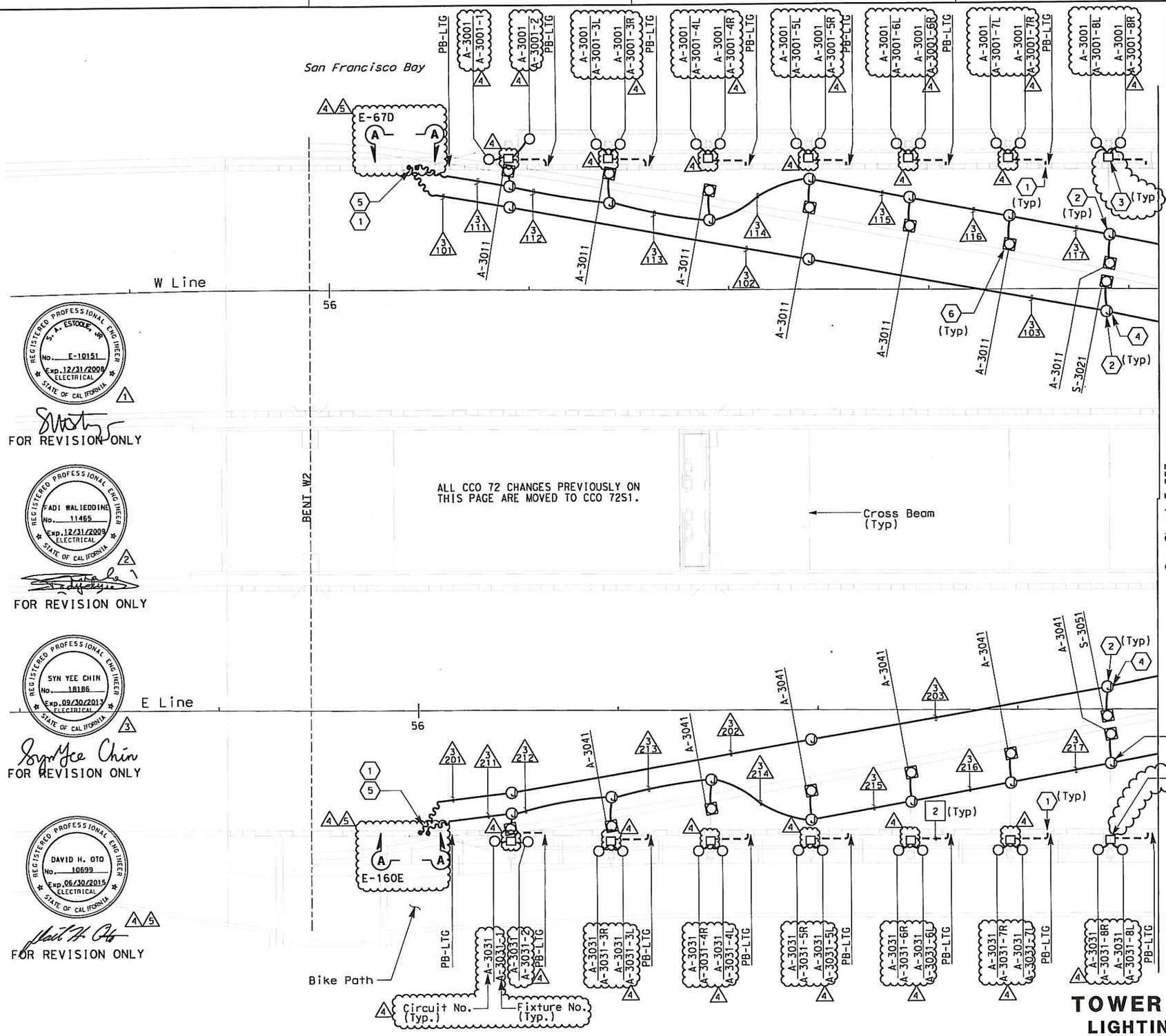

SHEET NOTES:

1. For additional conduits and actual location from PB-LTG, see SAS Superstructure Roadway Plans: E-46 (Westbound) E-135 (Eastbound)
2. Type PB-1F junction box is mounted on main suspension cable.
3. LED Driver Box
4. For additional conduits from noted junction box, see Aviation Lighting Plans sheet E-291.
5. Flexible conduits attached to suspender cables. See SAS Superstructure Roadway Plans for continuation.
6. For tower and suspension cable lighting mounting details, see sheets E-251 and E-257 to E-261.
7. Deleted.

NOTES:

1. For tower and suspension cable lighting schedule see sheets E-271 to E-272.
2. For pull box schedule see sheets E-83 & E-169.
3. For 480 V main suspension cable lighting wiring diagrams, see sheets E-236 through E-240 and E-243 through E-247.
4. For circuit and conduit/cable tray schedules, see sheets starting at E-401.
5. For other related work not shown on this sheet, see Electrical Special Provisions.

REQUEST FOR INFORMATION NOT ADDRESSED IN THIS CCO REMAIN IN FORCE

MARK	DATE	DESCRIPTIONS	BY	CH'D	CCO#
5	06/25/13	ROADWAY LEVEL LED FIXTURE DETAILS	RR	RG	252
4	11/16/12	ROADWAY LEVEL LED FIXTURE DETAILS	RR	RG	252
3	06/01/12	CABLE ELECTRICAL-LED AVIATION LIGHTS	RR	RG	72S1
2	10/10/08	LIGHTING REVISIONS	JH	RG FW	43
1	09/24/08	CABLE ELECTRICAL	RR AG	RG FW	72

REVISIONS

CONTRACT CHANGE ORDER NO. 252
SHEET 29 OF 44

TOWER AND SUSPENSION CABLE LIGHTING AND ELECTRICAL SYSTEMS

SCALE 1:200

E-226

SAS SUPERSTRUCTURE

ALL DIMENSIONS ARE IN MILLIMETERS UNLESS OTHERWISE SHOWN

THIS PLAN IS ACCURATE FOR ELECTRICAL WORK ONLY.

CALCULATED/ DESIGNED BY	JP	DATE 08/01	REVISED BY
CHECKED BY	EDC	09/01	DATE REVISED

REGISTERED PROFESSIONAL ENGINEER S. A. ESTOOLE, JR. No. E-10151 Exp. 12/31/2008 ELECTRICAL STATE OF CALIFORNIA (1)
FOR REVISION ONLY

REGISTERED PROFESSIONAL ENGINEER FADI WALIEDDINE No. 11465 Exp. 12/31/2009 ELECTRICAL STATE OF CALIFORNIA (2)
FOR REVISION ONLY

REGISTERED PROFESSIONAL ENGINEER SYN YEE CHIN No. 18186 Exp. 09/30/2013 ELECTRICAL STATE OF CALIFORNIA (3)
Syn Yee Chin
FOR REVISION ONLY

REGISTERED PROFESSIONAL ENGINEER DAVID H. OTO No. 10699 Exp. 06/30/2015 ELECTRICAL STATE OF CALIFORNIA (4)(5)
FOR REVISION ONLY

DESIGN OVERSIGHT
BEHZAD GOLEMOHAMMADI

STATE OF CALIFORNIA - DEPARTMENT OF TRANSPORTATION
Caltrans

LAST REVISION 06-25-13
DATE PLOTTED => 6/26/2013
TIME PLOTTED => 10:27:17 AM

FOR REDUCED PLANS ORIGINAL SCALE IS IN MILLIMETERS 0 20 40 60 80

DGN FILE =>04-0120f1_0244R05.dgn
USERNAME =>Melsheimer

CU 04251 | EA 0120F1

DIST	COUNTY	ROUTE	KILOMETER POST TOTAL PROJECT	SHEET No	TOTAL SHEETS
04	SF	80	13.2/13.9	245 R3	1204

REGISTERED ELECTRICAL ENGINEER 12/19/02 DATE

12-6-04
PLANS APPROVAL DATE

REGISTERED PROFESSIONAL ENGINEER JENS ERLINGSSON No. 8249 Exp. 9/30/06 ELECTRICAL STATE OF CALIFORNIA

PB POWER, Inc.
A Parsons Brinckerhoff Company
303 Second St., Suite 700N
San Francisco, CA 94107-1317

The State of California or its officers or agents shall not be responsible for the accuracy or completeness of electronic copies of this plan sheet.

Caltrans now has a web site! To get to the web site, go to http://www.dot.ca.gov

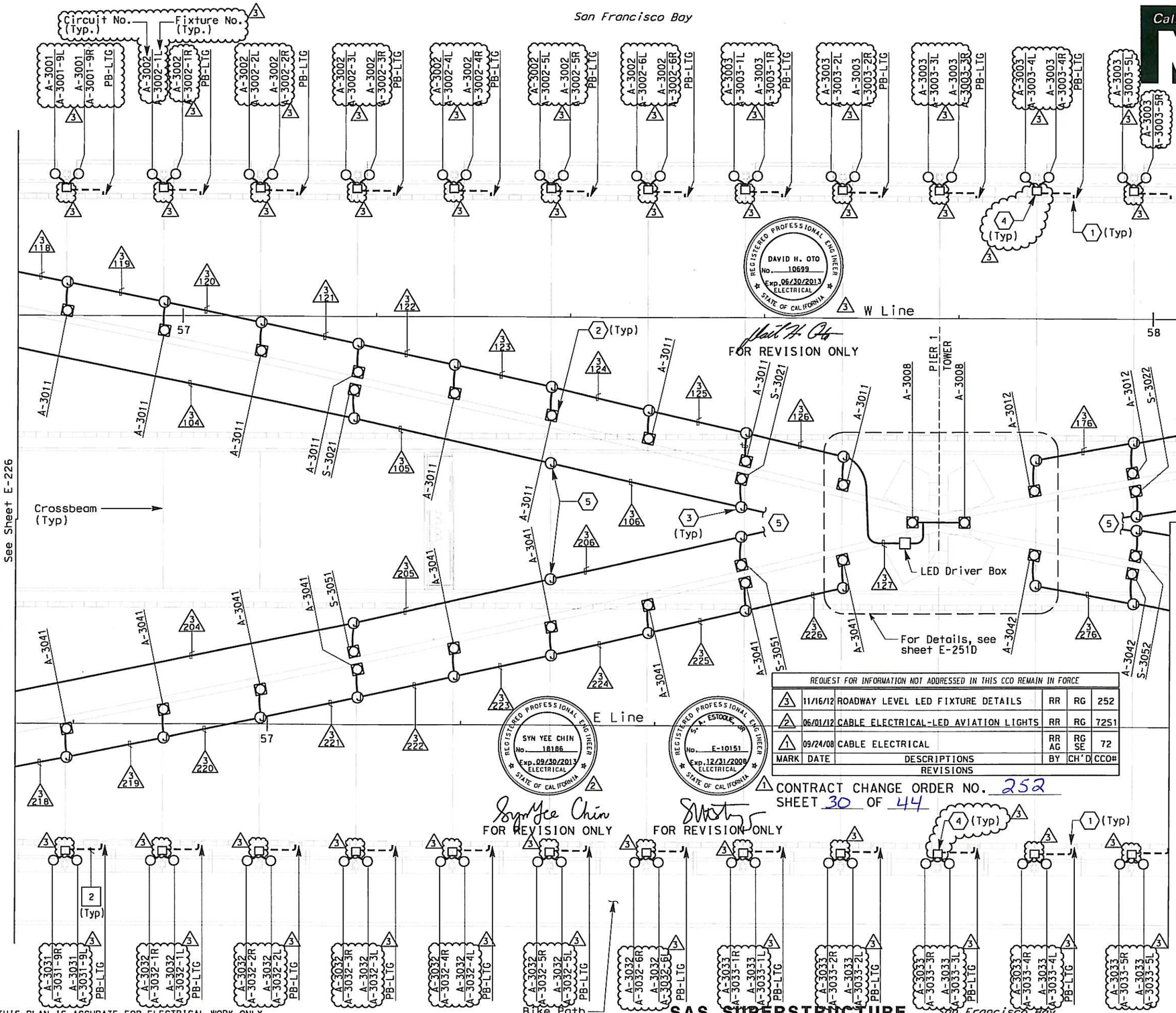

SHEET NOTES:

1. For additional conduits and actual location from PB-LTG, see SAS Superstructure Roadway Plans:
   E-47 (Westbound)
   E-136 (Eastbound)
2. For tower and suspension cable lighting mounting details, see sheets E-251 and E-257 to E-261.
3. Type PB-1F junction box is mounted on main suspension cable.
4. LED Driver Box
5. For additional conduits from noted junction box, See Aviation Lighting Plans sheet E-291.
6. Deleted.

NOTES:

1. For tower and suspension cable lighting schedule see sheets E-271 to E-272. & E-231.
2. For pull box schedule see sheets E-83 & E-169.
3. For 480 V main suspension cable lighting wiring diagrams, see sheets E-236 through E-240, E-243 through E247 and E-250.
4. For circuit and conduit/cable tray schedules, see sheets starting at E-401.
5. For other related work not shown on this sheet, see Electrical Special Provisions.

ALL CCO 72 CHANGES PREVIOUSLY ON THIS PAGE ARE MOVED TO CCO 72S1.

REQUEST FOR INFORMATION NOT ADDRESSED IN THIS CCO REMAIN IN FORCE

MARK	DATE	DESCRIPTIONS	BY	CH'D	CCO#
3	11/16/12	ROADWAY LEVEL LED FIXTURE DETAILS	RR	RG	252
2	06/01/12	CABLE ELECTRICAL-LED AVIATION LIGHTS	RR	RG	72S1
1	09/24/08	CABLE ELECTRICAL	RR AG	RG SE	72

REVISIONS

CONTRACT CHANGE ORDER NO. 252
SHEET 30 OF 44

TOWER AND SUSPENSION CABLE LIGHTING AND ELECTRICAL SYSTEMS

SCALE 1:200

THIS PLAN IS ACCURATE FOR ELECTRICAL WORK ONLY.

SAS SUPERSTRUCTURE

ALL DIMENSIONS ARE IN MILLIMETERS UNLESS OTHERWISE SHOWN

E-227

DATE	REVISED BY	DATE REVISED
08/01	JP	09/01

CALCULATED/DESIGNED BY JP
CHECKED BY EDC

DESIGN OVERSIGHT
BEHZAD GOLEMOHAMMADI

STATE OF CALIFORNIA - DEPARTMENT OF TRANSPORTATION
Caltrans

LAST REVISION 11-16-12
DATE PLOTTED => 6/26/2013
TIME PLOTTED => 10:28:01 AM

FOR REDUCED PLANS ORIGINAL SCALE IS IN MILLIMETERS 0 20 40 60 80

DGN FILE =>04-0120f1_0245R03.dgn
USERNAME =>Melsheimer

CU 04251 EA 0120F1

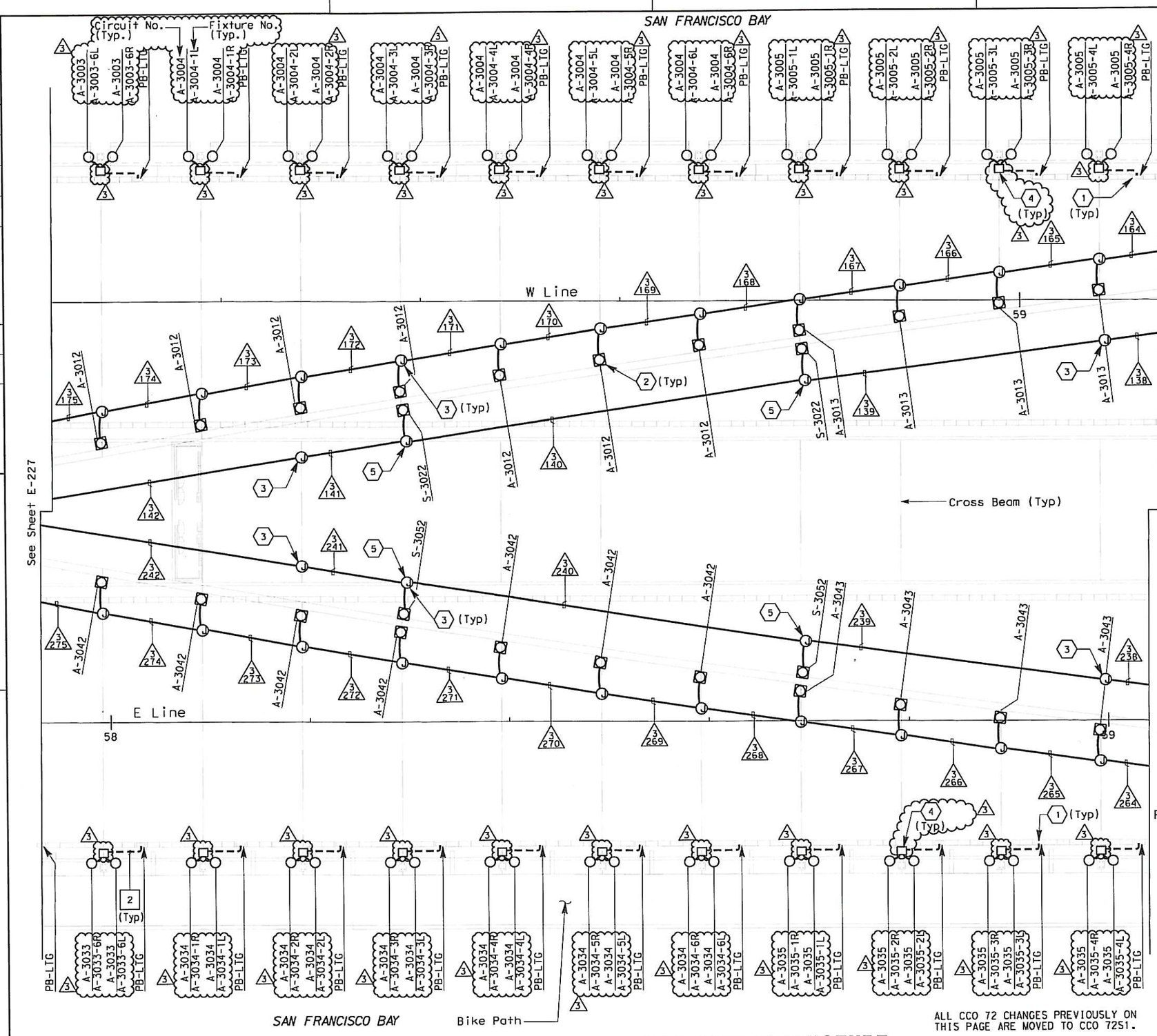

DIST	COUNTY	ROUTE	KILOMETER POST TOTAL PROJECT	SHEET No.	TOTAL SHEETS
04	SF	80	13.2/13.9	246 R3	1204

REGISTERED ELECTRICAL ENGINEER 12/19/02 DATE

12-6-04
PLANS APPROVAL DATE

REGISTERED PROFESSIONAL ENGINEER JENS ERLINGSSON No. 8249 Exp. 9/30/06 ELECTRICAL STATE OF CALIFORNIA

PB POWER, Inc.
A Parsons Brinckerhoff Company
303 Second St., Suite 700N
San Francisco, CA 94107-1317

The State of California or its officers or agents shall not be responsible for the accuracy or completeness of electronic copies of this plan sheet.

Caltrans now has a web site! To get to the web site, go to http://www.dot.ca.gov

Caltrans Metric

SHEET NOTES:

1. For additional conduits and actual location from PB-LTG, see SAS Superstructure Roadway Plans: E-48 (Westbound) E-137 (Eastbound)
2. For tower and suspension cable lighting mounting details, see sheets E-251 and E-257 to E-261.
3. Type PB-1F junction box is mounted on main suspension cable.
4. LED Driver Box
5. For additional conduits from noted junction box, See Aviation Lighting Plans sheet E-291.
6. Deleted.

NOTES:

1. For tower and suspension cable lighting schedule see sheets E-271 to E-272.
2. For pull box schedule see sheets E-83 & E-169.
3. For 480 V main suspension cable lighting wiring diagram. see sheets E-236 through E-240 and E-243 through E-247.
4. For circuit and conduit/cable tray schedules, see sheets starting at E-401.
5. For other related work not shown on this sheet, see Electrical Special Provisions.

REGISTERED PROFESSIONAL ENGINEER S. A. ESTOQUE, JR. No. E-10151 Exp. 12/31/2008 ELECTRICAL STATE OF CALIFORNIA — 1 — FOR REVISION ONLY

REGISTERED PROFESSIONAL ENGINEER SYN YEE CHIN No. 18186 Exp. 09/30/2013 ELECTRICAL STATE OF CALIFORNIA — 2 — FOR REVISION ONLY

REGISTERED PROFESSIONAL ENGINEER DAVID H. OTO No. 10699 Exp. 06/30/2013 ELECTRICAL STATE OF CALIFORNIA — 3 — FOR REVISION ONLY

REQUEST FOR INFORMATION NOT ADDRESSED IN THIS CCO REMAIN IN FORCE

MARK	DATE	DESCRIPTIONS	BY	CH'D	CCO#
3	11/16/12	ROADWAY LEVEL LED FIXTURE DETAILS	RR	RG	252
2	06/01/12	CABLE ELECTRICAL-LED AVIATION LIGHTS	RR	RG	72S1
1	09/24/08	CABLE ELECTRICAL	RR AG	RG SE	72

REVISIONS

CONTRACT CHANGE ORDER NO. 252
SHEET 31 OF 44

TOWER AND SUSPENSION CABLE LIGHTING AND ELECTRICAL SYSTEMS

SCALE 1:200

E-228

SAS SUPERSTRUCTURE

ALL CCO 72 CHANGES PREVIOUSLY ON THIS PAGE ARE MOVED TO CCO 72S1.

THIS PLAN IS ACCURATE FOR ELECTRICAL WORK ONLY.

ALL DIMENSIONS ARE IN MILLIMETERS UNLESS OTHERWISE SHOWN

STATE OF CALIFORNIA - DEPARTMENT OF TRANSPORTATION

Caltrans

DESIGN OVERSIGHT: BEHZAD GOLEMOHAMMADI

CALCULATED/DESIGNED BY: JP — DATE: 08/01 — REVISED BY
CHECKED BY: EDC — DATE: 09/01 — DATE REVISED

LAST REVISION 11-16-12 — DATE PLOTTED => 11/16/2012 — TIME PLOTTED => 5:51:09 PM

FOR REDUCED PLANS ORIGINAL SCALE IS IN MILLIMETERS 0 20 40 60 80

DGN FILE =>04-0120F1_0246R03.dgn
USERNAME =>Melsheimer

CU 04251 — EA 0120F1

DIST	COUNTY	ROUTE	KILOMETER POST TOTAL PROJECT	SHEET No	TOTAL SHEETS
04	SF	80	13.2/13.9	247 R7	1204

REGISTERED ELECTRICAL ENGINEER 12/19/02 DATE

12-6-04
PLANS APPROVAL DATE

REGISTERED PROFESSIONAL ENGINEER JENS ERLINGSSON No. 8249 Exp. 9/30/06 ELECTRICAL STATE OF CALIFORNIA

PB POWER, Inc.
A Parsons Brinckerhoff Company
303 Second St., Suite 700N
San Francisco, CA 94107-1317

The State of California or its officers or agents shall not be responsible for the accuracy or completeness of electronic copies of this plan sheet.

Caltrans now has a web site! To get to the web site, go to http://www.dot.ca.gov

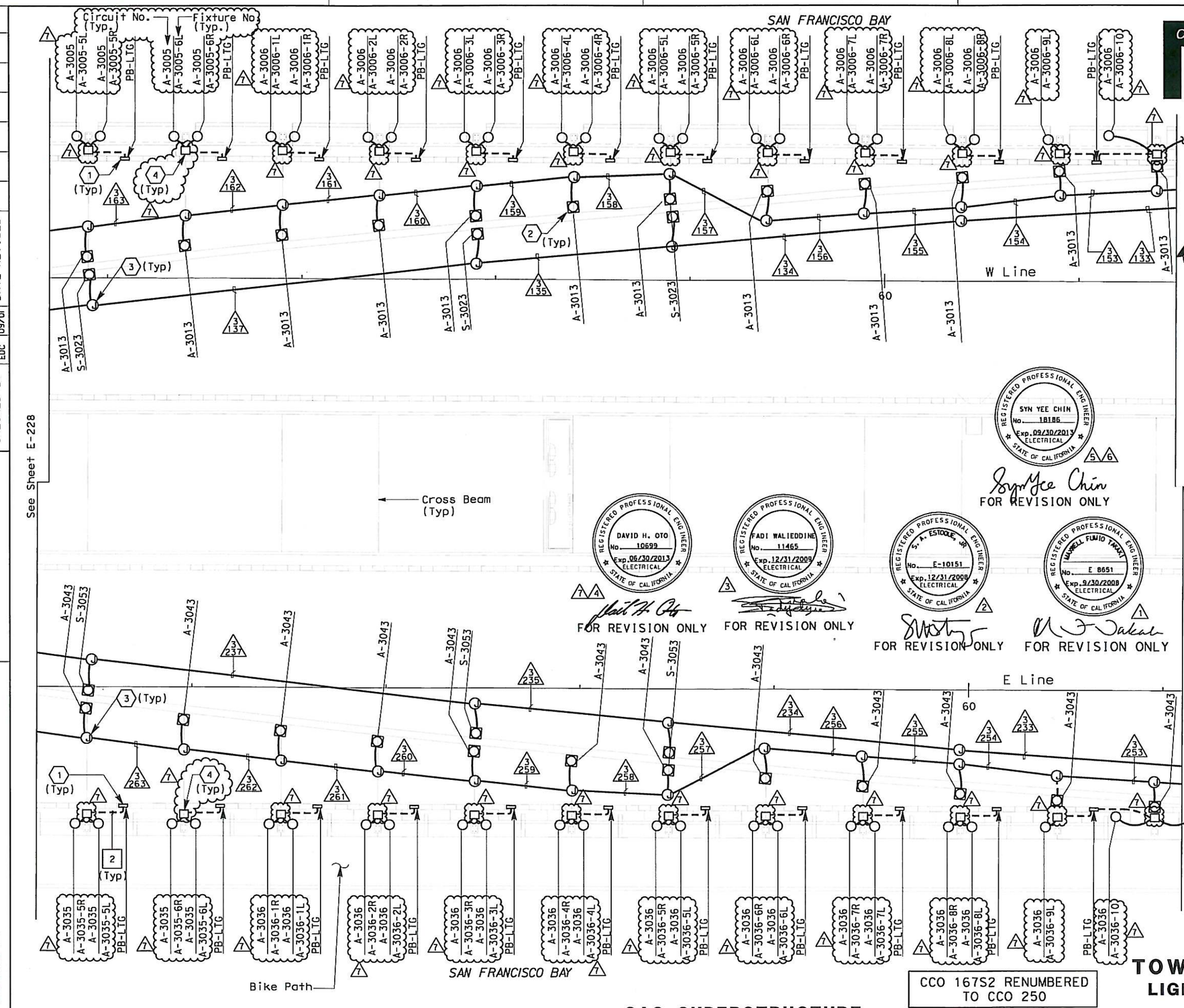

SHEET NOTES:

1. For additional conduits and actual location from PB-LTG, see SAS Superstructure Roadway Plans: E-49 (Westbound) E-138 (Eastbound)
2. For tower and suspension cable lighting mounting details, see sheets E-251 and E-257 to E-261.
3. Type PB-1F junction box is mounted on main suspension cable.
4. LED Driver Box
5. Deleted.

NOTES:

1. For tower and suspension cable lighting schedule see sheets E-271 to E-272.
2. For pull box schedule see sheets E-83 & E-169.
3. For 480 V main suspension cable lighting wiring diagrams, see sheets E-236 through E-240 and E-243 through E-247.
4. For circuit and conduit/cable tray schedules, see sheets starting at E-401.
5. For other related work not shown on this sheet, see Electrical Special Provisions.

REQUEST FOR INFORMATION NOT ADDRESSED IN THIS CCO REMAIN IN FORCE

MARK	DATE	DESCRIPTIONS	BY	CH'D	CCO#
7	11/16/12	ROADWAY LEVEL LED FIXTURE DETAILS	RR	RG	252
6	06/01/12	CABLE ELECTRICAL-LED AVAIATION LIGHTS	RR	RG	72S1
5	05/10/12	ADDITIONAL CABLE LEDs	CK	NK	250
4	03/02/12	ADDITIONAL CABLE LEDs	RR	RG	167S2
3	10/10/08	LIGHTING REVISIONS	JH	RG FW	43
2	09/24/08	CABLE ELECTRICAL	RG	SE	72
1	02/19/08	ELECTRICAL MODIFICATIONS	MP EL	RR	42

REVISIONS

CONTRACT CHANGE ORDER NO. 252
SHEET 32 OF 44

CCO 167S2 RENUMBERED TO CCO 250

TOWER AND SUSPENSION CABLE LIGHTING AND ELECTRICAL SYSTEMS

SCALE 1:200

SAS SUPERSTRUCTURE

E-229

THIS PLAN IS ACCURATE FOR ELECTRICAL WORK ONLY.

ALL DIMENSIONS ARE IN MILLIMETERS UNLESS OTHERWISE SHOWN

FOR REDUCED PLANS ORIGINAL SCALE IS IN MILLIMETERS 0 20 40 60 80

DGN FILE =>04-0120f1_0247R07.dgn
USERNAME =>Weisheimer

CU 04251 | EA 0120F1

DATE PLOTTED => 6/26/2013
TIME PLOTTED => 10:29:34 AM

LAST REVISION 11-16-12

STATE OF CALIFORNIA - DEPARTMENT OF TRANSPORTATION
Caltrans

DESIGN OVERSIGHT: BEHZAD GOLEMOHAMMADI

CALCULATED/DESIGNED BY: JP | DATE: 08/01 | REVISED BY
CHECKED BY: EDC | 09/01 | DATE REVISED

DIST	COUNTY	ROUTE	KILOMETER POST TOTAL PROJECT	SHEET No	TOTAL SHEETS
04	SF	80	13.2/13.9	248 R6	1204

REGISTERED ELECTRICAL ENGINEER 12/19/02 DATE

12-6-04
PLANS APPROVAL DATE

REGISTERED PROFESSIONAL ENGINEER JENS ERLINGSSON No. 8249 Exp. 9/30/06 ELECTRICAL STATE OF CALIFORNIA

PB POWER, Inc.
A Parsons Brinckerhoff Company
303 Second St., Suite 700N
San Francisco, CA 94107-1317

The State of California or its officers or agents shall not be responsible for the accuracy or completeness of electronic copies of this plan sheet.

Caltrans now has a web site! To get to the web site, go to http://www.dot.ca.gov

Caltrans Metric

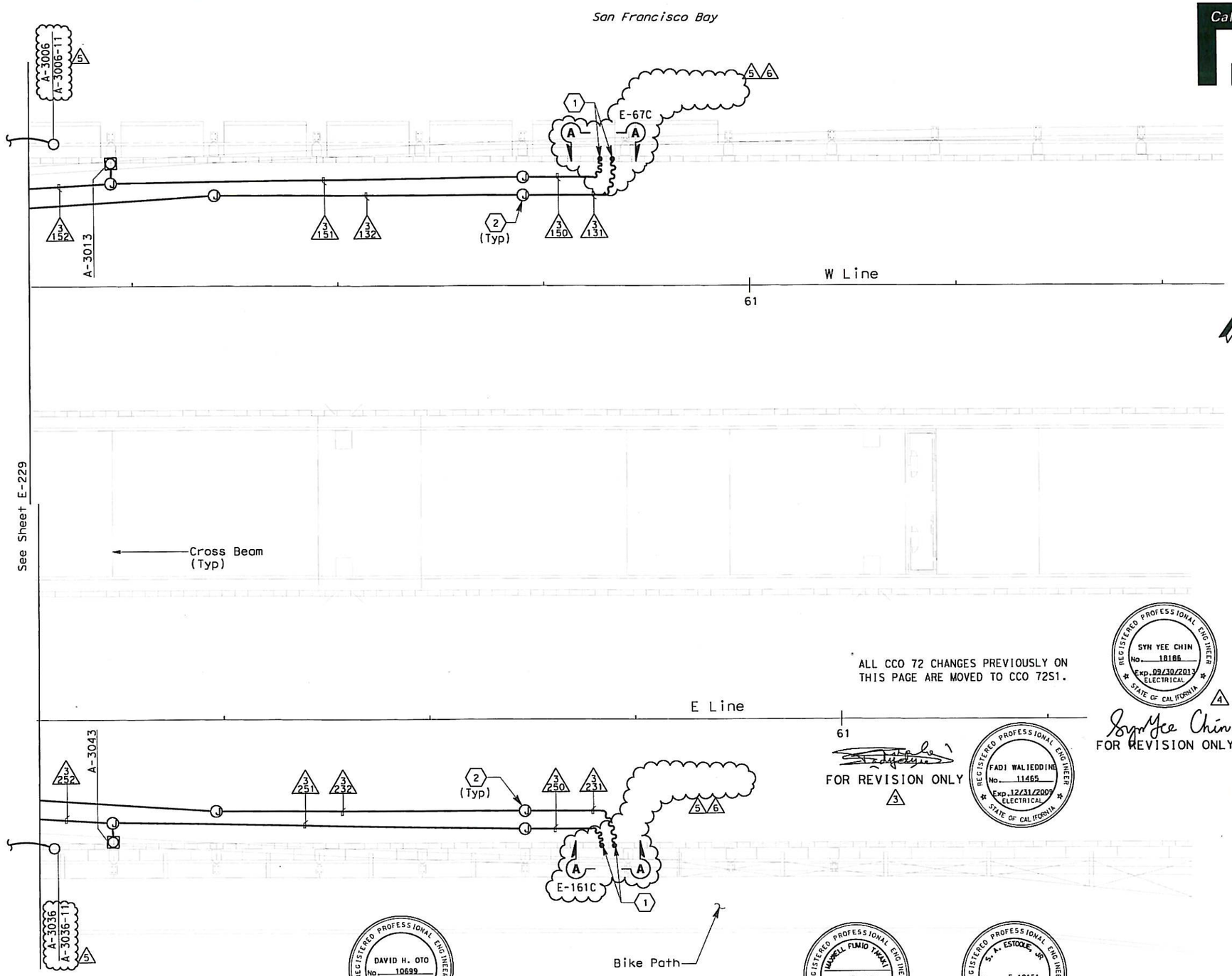

REGISTERED PROFESSIONAL ENGINEER SYN YEE CHIN No. 18186 Exp. 09/30/2013 ELECTRICAL STATE OF CALIFORNIA 4

Syn Yee Chin
FOR REVISION ONLY

FOR REVISION ONLY 3

REGISTERED PROFESSIONAL ENGINEER FADI WALIEDDINE No. 11465 Exp. 12/31/2009 ELECTRICAL STATE OF CALIFORNIA

REGISTERED PROFESSIONAL ENGINEER DAVID H. OTO No. 10699 Exp. 06/30/2015 ELECTRICAL STATE OF CALIFORNIA

FOR REVISION ONLY 5 6

REGISTERED PROFESSIONAL ENGINEER MARCELL FUMIO TAKAKI No. E 8651 Exp. 9/30/2008 ELECTRICAL STATE OF CALIFORNIA 1

FOR REVISION ONLY

REGISTERED PROFESSIONAL ENGINEER S. A. ESTOQUE, JR. No. E-10151 Exp. 12/31/2008 ELECTRICAL STATE OF CALIFORNIA 2

FOR REVISION ONLY

SAS SUPERSTRUCTURE

THIS PLAN IS ACCURATE FOR ELECTRICAL WORK ONLY.

ALL DIMENSIONS ARE IN MILLIMETERS UNLESS OTHERWISE SHOWN

SHEET NOTES:

1. Flexible conduits attached to suspender cables. See SAS Superstructure Roadway Plans: E-50 (Westbound) E-139 (Eastbound)
2. Type PB-1F junction box is mounted on main suspension cable.
3. Deleted.

NOTES:

1. For tower and suspension cable lighting schedule see sheets E-271 to E-272.
2. For pull box schedule see sheets E-83 & E-169.
3. For 480 V main suspension cable lighting wiring diagrams, see sheets E-236 through E-240 and E-243 through E-247.
4. For circuit and conduit/cable tray schedules, see sheets starting at E-401.
5. For other related work not shown on this sheet, see Electrical Special Provisions.

REQUEST FOR INFORMATION NOT ADDRESSED IN THIS CCO REMAIN IN FORCE

MARK	DATE	DESCRIPTIONS	BY	CH'D	CCO#
6	06/25/13	ROADWAY LEVEL LED FIXTURE DETAILS	RR	RG	252
5	11/16/12	ROADWAY LEVEL LED FIXTURE DETAILS	RR	RG	252
4	06/13/12	CABLE ELECTRICAL-LED AVIATION LIGHTS	RR	RG	72S1
3	10/10/08	LIGHTING REVISIONS	JH	RG FW	43
2	09/24/08	CABLE ELECTRICAL	RG	SE	72
1	02/19/08	ELECTRICAL MODIFICATIONS	MP EL	RR	42

REVISIONS

CONTRACT CHANGE ORDER NO. 252
SHEET 33 OF 44

TOWER AND SUSPENSION CABLE LIGHTING AND ELECTRICAL SYSTEMS

SCALE 1:200

E-230

CALCULATED/ DESIGNED BY	JP	DATE 08/01	REVISED BY
CHECKED BY	EDC	09/01	DATE REVISED

DESIGN OVERSIGHT
BEHZAD GOLEMOHAMMADI

STATE OF CALIFORNIA - DEPARTMENT OF TRANSPORTATION
Caltrans

LAST REVISION 06-25-13
DATE PLOTTED => 6/26/2013
TIME PLOTTED => 10:30:00 AM

FOR REDUCED PLANS ORIGINAL SCALE IS IN MILLIMETERS 0 20 40 60 80

DGN FILE =>04-0120F1_024BR06.dgn
USERNAME =>Melsheimer

CU 04251 | EA 0120F1

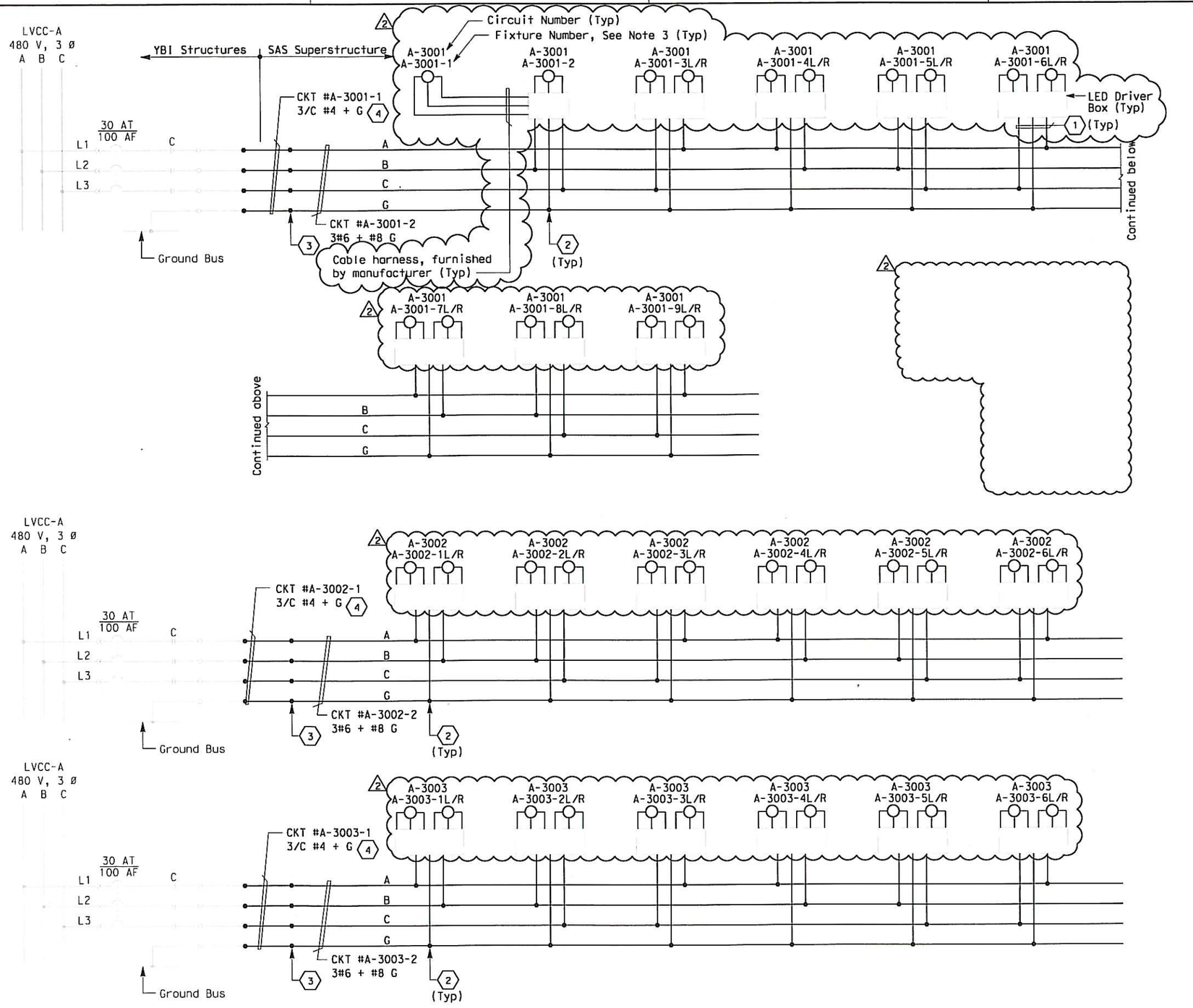

480 V SUSPENDER UPLIGHT LIGHTING

DIST	COUNTY	ROUTE	KILOMETER POST TOTAL PROJECT	SHEET No	TOTAL SHEETS
04	SF	80	13.2/13.9	251 R2	1204

REGISTERED ELECTRICAL ENGINEER 12/19/02 DATE

12-6-04
PLANS APPROVAL DATE

REGISTERED PROFESSIONAL ENGINEER JENS ERLINGSSON No. 8249 Exp. 9/30/06 ELECTRICAL STATE OF CALIFORNIA

PB POWER, Inc.
A Parsons Brinckerhoff Company
303 Second St., Suite 700N
San Francisco, CA 94107-1317

The State of California or its officers or agents shall not be responsible for the accuracy or completeness of electronic copies of this plan sheet.

Caltrans now has a web site! To get to the web site, go to http://www.dot.ca.gov

Caltrans Metric

SHEET NOTES:

1. 2/C #10 + G. △2
2. Conductors spliced inside pull box PB-LTG. △2
3. Conductors spliced inside junction box PB-2A located inside girder.
4. The Contractor shall extend and coil 5 meters of cable in manhole 25. All cables shall be tagged with circuits numbers as shown.
5. △2 Deleted.

NOTES:

1. Use multi-conductor cable if circuit is routed via trays.
2. References:
   - For typical pull box schedule, see sheets E-83 and E-169.
   - For circuit and conduit/cable tray schedules, see sheets starting at E-401.
3. For number of lighting fixtures see Lighting Fixture Schedule sheets E-271 and E-272.

REGISTERED PROFESSIONAL ENGINEER DAVID H. OTO No. 10699 Exp. 06/30/2013 ELECTRICAL STATE OF CALIFORNIA △2

FOR REVISION ONLY

REGISTERED PROFESSIONAL ENGINEER FADI WALIEDDINE No. 11465 Exp. 12/31/2009 ELECTRICAL STATE OF CALIFORNIA △1

FOR REVISION ONLY

REQUEST FOR INFORMATION NOT ADDRESSED IN THIS CCO REMAIN IN FORCE

MARK	DATE	DESCRIPTIONS	BY	CH'D	CCO#
△2	11/16/12	ROADWAY LEVEL LED FIXTURE DETAILS	RSB	RG	252
△1	10/10/08	LIGHTING REVISIONS	RY AG	RG FW	43

REVISIONS

CONTRACT CHANGE ORDER NO. 252
SHEET 34 OF 44

DETAILS
TOWER AND SUSPENSION CABLE
480 V MAIN SUSPENSION CABLE LIGHTING WIRING DIAGRAM

NO SCALE

E-237

STATE OF CALIFORNIA - DEPARTMENT OF TRANSPORTATION
Caltrans

DESIGN OVERSIGHT: BEHZAD GOLEMOHAMMADI

CALCULATED/DESIGNED BY	JP	DATE 8/01	REVISED BY	DATE REVISED
CHECKED BY	EDC	11/01		

LAST REVISION 11-16-12 | DATE PLOTTED => 6/26/2013 TIME PLOTTED => 10:30:30 AM

FOR REDUCED PLANS ORIGINAL SCALE IS IN MILLIMETERS 0 20 40 60 80

DGN FILE =>04-0120f1_0251R02.dgn
USERNAME =>Melsheimer

CU 04251 | EA 0120F1

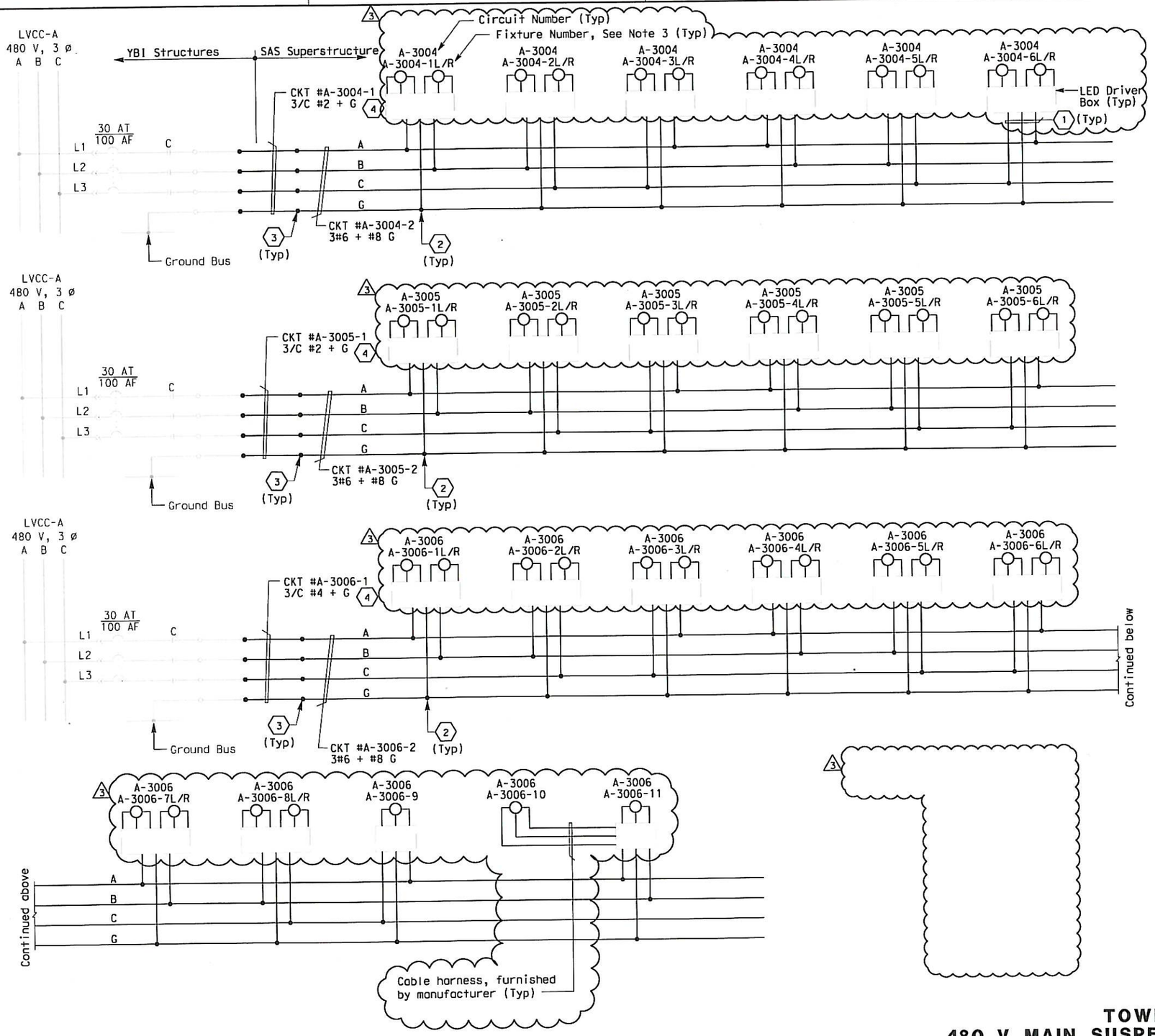

480 V SUSPENDER UPLIGHT LIGHTING

DIST	COUNTY	ROUTE	KILOMETER POST TOTAL PROJECT	SHEET No	TOTAL SHEETS
04	SF	80	13.2/13.9	252 R3	1204

12/19/02
REGISTERED ELECTRICAL ENGINEER DATE

12-6-04
PLANS APPROVAL DATE

REGISTERED PROFESSIONAL ENGINEER JENS ERLINGSSON No. 8249 Exp. 9/30/06 ELECTRICAL STATE OF CALIFORNIA

PB POWER, Inc.
A Parsons Brinckerhoff Company
303 Second St., Suite 700N
San Francisco, CA 94107-1317

The State of California or its officers or agents shall not be responsible for the accuracy or completeness of electronic copies of this plan sheet.

Caltrans now has a web site! To get to the web site, go to http://www.dot.ca.gov

Caltrans Metric

SHEET NOTES:

1. 2/C #10 + G.
2. Conductors spliced inside pull box PB-LTG.
3. Conductors spliced inside junction box PB-2A located inside girder.
4. The Contractor shall extend and coil 5 meters of cable in manhole 25. All cables shall be tagged with circuits numbers as shown.
5. Deleted.

NOTES:

1. Use multi-conductor cable if circuit is routed via trays.
2. References:
   - For typical pull box schedule, see sheets E-83 and E-169.
   - For circuit and conduit/cable tray schedules, see sheets starting at E-401.
3. For number of lighting fixtures see Lighting Fixture Schedule sheets E-271 and E-272.

REGISTERED PROFESSIONAL ENGINEER DAVID H. OTO No. 10699 Exp. 06/30/2013 ELECTRICAL STATE OF CALIFORNIA — FOR REVISION ONLY

REGISTERED PROFESSIONAL ENGINEER FADI WALIEDDINE No. 11465 Exp. 12/31/2008 ELECTRICAL STATE OF CALIFORNIA — FOR REVISION ONLY

REGISTERED PROFESSIONAL ENGINEER MARCELL FUMIO TAKAKI No. E 8651 Exp. 9/30/2008 ELECTRICAL STATE OF CALIFORNIA — FOR REVISION ONLY

REQUEST FOR INFORMATION NOT ADDRESSED IN THIS CCO REMAIN IN FORCE

MARK	DATE	DESCRIPTIONS	BY	CH'D	CCO#
3	11/16/12	ROADWAY LEVEL LED FIXTURE DETAILS	RSB	RG	252
2	10/10/08	LIGHTING REVISIONS	RY AG	RG FW	43
1	12/19/08	CABLE ELECTRICAL	MP EL	RR	42

REVISIONS

CONTRACT CHANGE ORDER NO. 252
SHEET 35 OF 44

DETAILS
TOWER AND SUSPENSION CABLE
480 V MAIN SUSPENSION CABLE LIGHTING WIRING DIAGRAM

NO SCALE

E-238

REVISED BY	DATE REVISED
JP	8/01
EDC	11/01

CALCULATED/DESIGNED BY
CHECKED BY

DESIGN OVERSIGHT
BEHZAD GOLEMOHAMMADI

STATE OF CALIFORNIA - DEPARTMENT OF TRANSPORTATION
Caltrans

LAST REVISION 11-16-12
DATE PLOTTED => 6/26/2013
TIME PLOTTED => 10:31:05 AM

FOR REDUCED PLANS ORIGINAL SCALE IS IN MILLIMETERS 0 20 40 60 80

DGN FILE =>04-0120f1_0252R03.dgn
USERNAME =>Melsheimer

CU 04251 | EA 0120F1

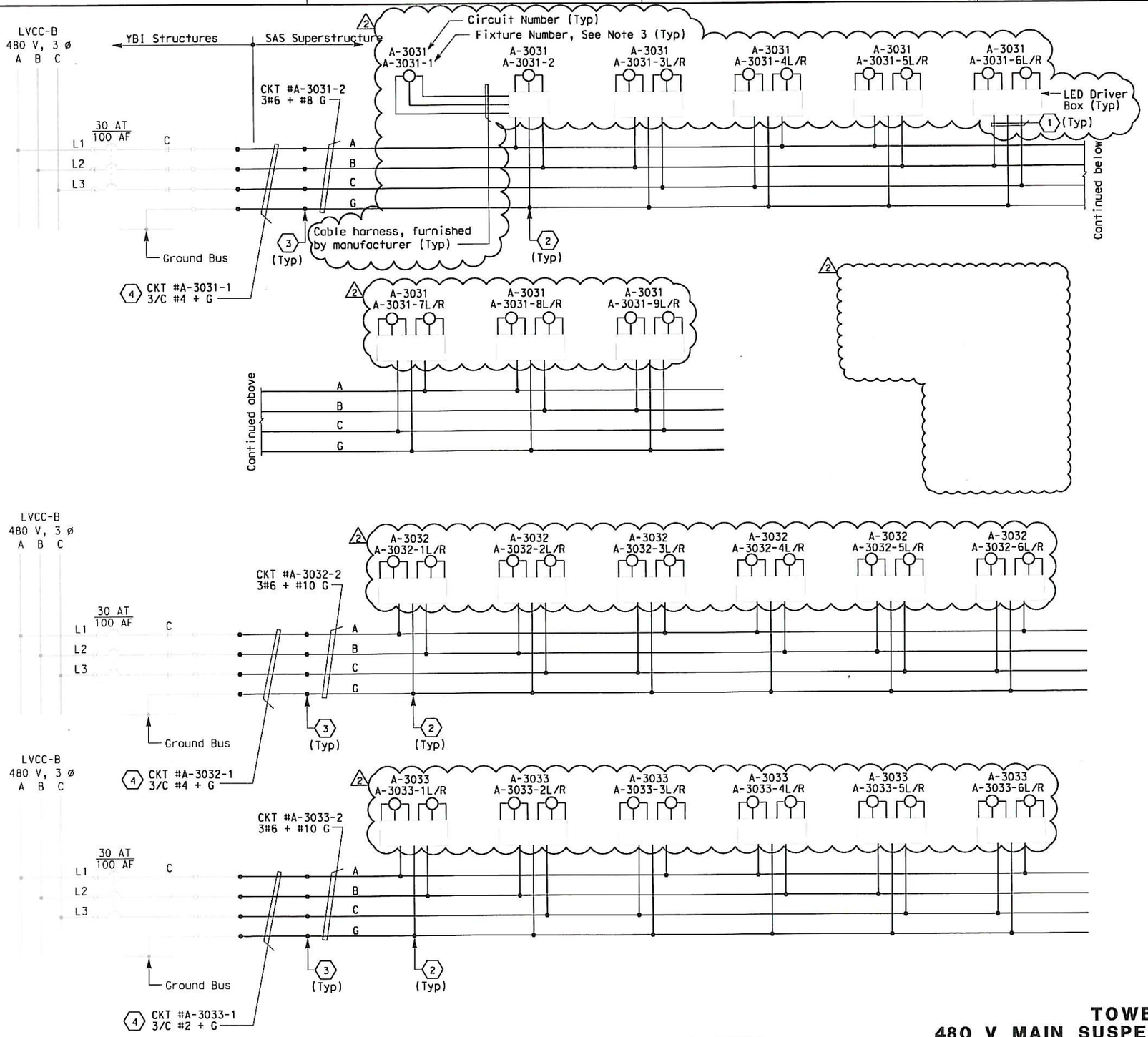

480 V SUSPENDER UPLIGHT LIGHTING

DIST	COUNTY	ROUTE	KILOMETER POST TOTAL PROJECT	SHEET No	TOTAL SHEETS
04	SF	80	13.2/13.9	256 R2	1204

REGISTERED ELECTRICAL ENGINEER 12/19/02 DATE

12-6-04
PLANS APPROVAL DATE

REGISTERED PROFESSIONAL ENGINEER JENS ERLINGSSON No. 8249 Exp. 9/30/06 ELECTRICAL STATE OF CALIFORNIA

PB POWER, Inc.
A Parsons Brinckerhoff Company
303 Second St., Suite 700N
San Francisco, CA 94107-1317

The State of California or its officers or agents shall not be responsible for the accuracy or completeness of electronic copies of this plan sheet.

Caltrans now has a web site! To get to the web site, go to http://www.dot.ca.gov

Caltrans Metric

SHEET NOTES:

1. 2/C #10 + G. △2
2. Conductors spliced inside pull box PB-LTG. △2
3. Conductors spliced inside junction box PB-2A located inside girder.
4. The Contractor shall extend and coil 5 meters of cable in manhole 25. All cables shall be tagged with circuits numbers as shown.
5. △2 Deleted.

NOTES:

1. Use multi-conductor cable if circuit is routed via trays.
2. References:
   - For typical pull box schedule, see sheets E-83 and E-169.
   - For circuit and conduit/cable tray schedules, see sheets starting at E-401.
3. For number of lighting fixtures see Lighting Fixture Schedule sheets E-271 and E272.

REGISTERED PROFESSIONAL ENGINEER FADI WALIEDDINE No. 11465 Exp. 12/31/2009 ELECTRICAL STATE OF CALIFORNIA △1
FOR REVISION ONLY

REGISTERED PROFESSIONAL ENGINEER DAVID H. OTO No. 10699 Exp. 06/30/2013 ELECTRICAL STATE OF CALIFORNIA △2
FOR REVISION ONLY

REQUEST FOR INFORMATION NOT ADDRESSED IN THIS CCO REMAIN IN FORCE

MARK	DATE	DESCRIPTIONS	BY	CH'D	CCO#
△2	11/16/12	ROADWAY LEVEL LED FIXTURE DETAILS	RSB	RG	252
△1	10/10/08	LIGHTING REVISIONS	RY AG	RG FW	43

REVISIONS

CONTRACT CHANGE ORDER NO. 252
SHEET 36 OF 44

DETAILS
TOWER AND SUSPENSION CABLE
480 V MAIN SUSPENSION CABLE LIGHTING WIRING DIAGRAM
NO SCALE

E-244

CALCULATED/ DESIGNED BY	DATE 8/01	REVISED BY	DATE REVISED
JP	11/01		
CHECKED BY	EDC		

DESIGN OVERSIGHT
BEHZAD GOLEMOHAMMADI

STATE OF CALIFORNIA - DEPARTMENT OF TRANSPORTATION
Caltrans

LAST REVISION 11-16-12
DATE PLOTTED => 6/26/2013
TIME PLOTTED => 10:31:38 AM

FOR REDUCED PLANS ORIGINAL SCALE IS IN MILLIMETERS 0 20 40 60 80
DGN FILE =>04-0120F1_0256R02.dgn
USERNAME =>Melsheimer
CU 04251
EA 0120F1

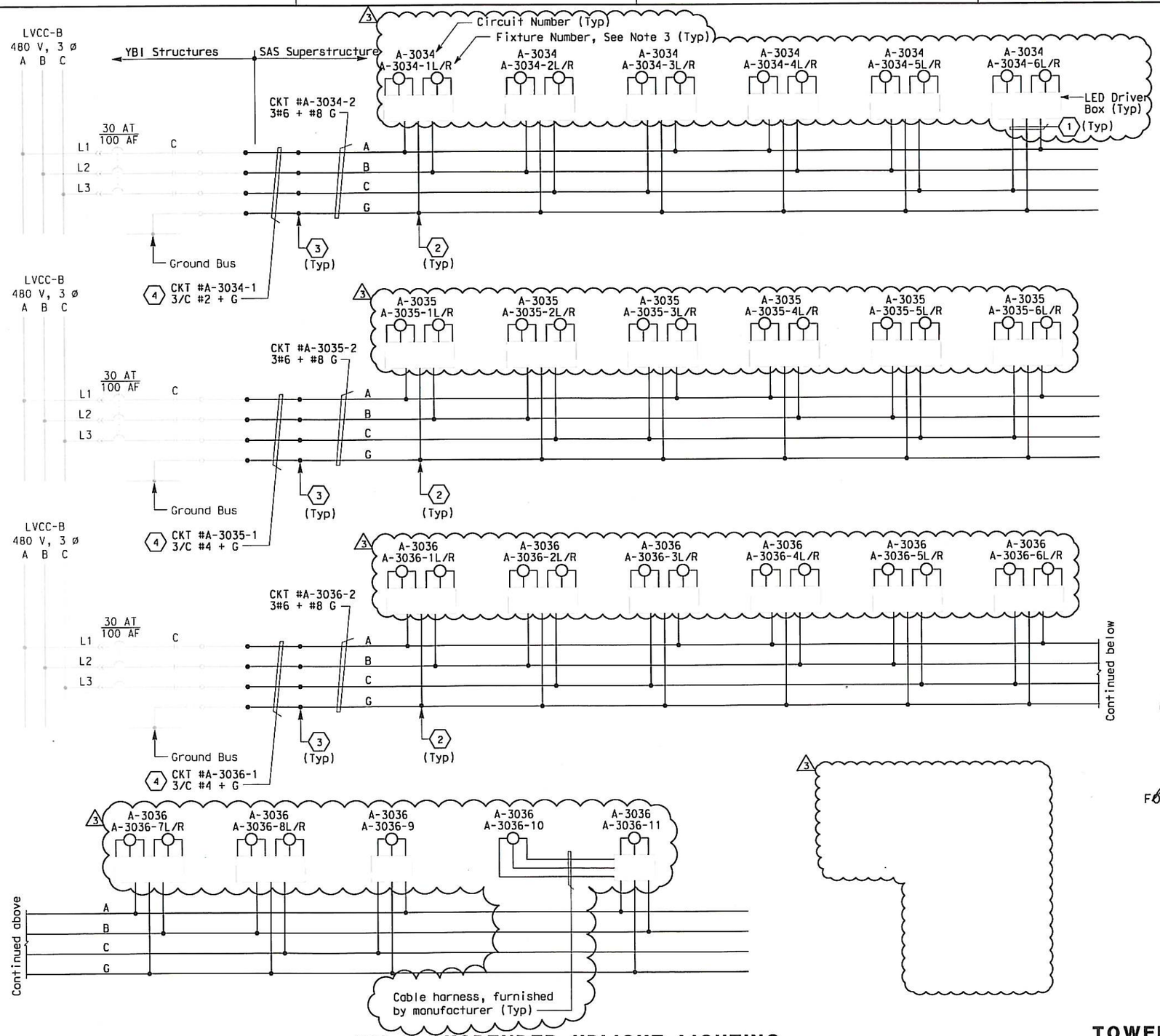

480 V SUSPENDER UPLIGHT LIGHTING

DIST	COUNTY	ROUTE	KILOMETER POST TOTAL PROJECT	SHEET No	TOTAL SHEETS
04	SF	80	13.2/13.9	257 R3	1204

REGISTERED ELECTRICAL ENGINEER 12/19/02 DATE

12-6-04
PLANS APPROVAL DATE

REGISTERED PROFESSIONAL ENGINEER JENS ERLINGSSON No. 8249 Exp. 9/30/06 ELECTRICAL STATE OF CALIFORNIA

PB POWER, Inc.
A Parsons Brinckerhoff Company
303 Second St., Suite 700N
San Francisco, CA 94107-1317

The State of California or its officers or agents shall not be responsible for the accuracy or completeness of electronic copies of this plan sheet.

Caltrans now has a web site! To get to the web site, go to http://www.dot.ca.gov

Caltrans Metric

SHEET NOTES:

(1) 2/C #10 + G. (3)

(2) Conductors spliced inside pull box PB-LTG. (3)

(3) Conductors spliced inside junction box PB-2A located inside girder.

(4) The Contractor shall extend and coil 5 meters of cable in manhole 25. All cables shall be tagged with circuits numbers as shown.

(3) (5) Deleted.

NOTES:

1. Use multi-conductor cable if circuit is routed via trays.
2. References:
   - For typical pull box schedule, see sheets E-83 and E-169.
   - For circuit and conduit/cable tray schedules, see sheets starting at E-401.
3. For number of lighting fixtures see Lighting Fixture Schedule sheets E-271 and E-272.

REGISTERED PROFESSIONAL ENGINEER DAVID H. OTO No. 10699 Exp. 06/30/2013 ELECTRICAL STATE OF CALIFORNIA (3) — FOR REVISION ONLY

REGISTERED PROFESSIONAL ENGINEER FADI WALIEDDINE No. 11465 Exp. 12/31/2009 ELECTRICAL STATE OF CALIFORNIA (2) — FOR REVISION ONLY

REGISTERED PROFESSIONAL ENGINEER MARCELL FUMIO TAKATA No. E 8651 Exp. 9/30/2008 ELECTRICAL STATE OF CALIFORNIA (1) — FOR REVISION ONLY

REQUEST FOR INFORMATION NOT ADDRESSED IN THIS CCO REMAIN IN FORCE

MARK	DATE	DESCRIPTIONS	BY	CH'D	CCO#
(3)	11/16/12	ROADWAY LEVEL LED FIXTURE DETAILS	RSB	RG	252
(2)	10/10/08	LIGHTING REVISIONS	RY AG	RG FW	43
(1)	12/19/08	CABLE ELECTRICAL	MP EL	RR	42

REVISIONS

CONTRACT CHANGE ORDER NO. 252
SHEET 37 OF 44

DETAILS
TOWER AND SUSPENSION CABLE
480 V MAIN SUSPENSION CABLE LIGHTING WIRING DIAGRAM
NO SCALE

E-245

STATE OF CALIFORNIA - DEPARTMENT OF TRANSPORTATION
Caltrans

DESIGN OVERSIGHT: BEHZAD GOLEMOHAMMADI

CALCULATED/DESIGNED BY: JP — CHECKED BY: EDC — DATE: 09/01 — DATE REVISED: 11/01 — REVISED BY:

LAST REVISION 11/16/12 — DATE PLOTTED => 6/26/2013 — TIME PLOTTED => 10:32:07 AM

FOR REDUCED PLANS ORIGINAL SCALE IS IN MILLIMETERS 0 20 40 60 80

DGN FILE =>04-0120f1_0257R03.dgn
USERNAME =>Melsheimer

CU 04251 — EA 0120F1

DIST	COUNTY	ROUTE	KILOMETER POST TOTAL PROJECT	SHEET NO.	TOTAL SHEETS
04	SF	80	13.2/13.9	265R	1204

REGISTERED ENGINEER-CIVIL

12-6-04

PLANS APPROVAL DATE

REGISTERED PROFESSIONAL ENGINEER T. W. SPARKS No. E16039 Exp. 9-30-05 ELECTRICAL STATE OF CALIFORNIA

The State of California or its officers or agents shall not be responsible for the accuracy or completeness of electronic copies of this plan sheet.

T.Y. LIN / MOFFATT & NICHOL
825 BATTERY STREET
SAN FRANCISCO, CA 94111

Caltrans now has a web site! To get to the web site, go to: http://www.dot.ca.gov

Caltrans Metric

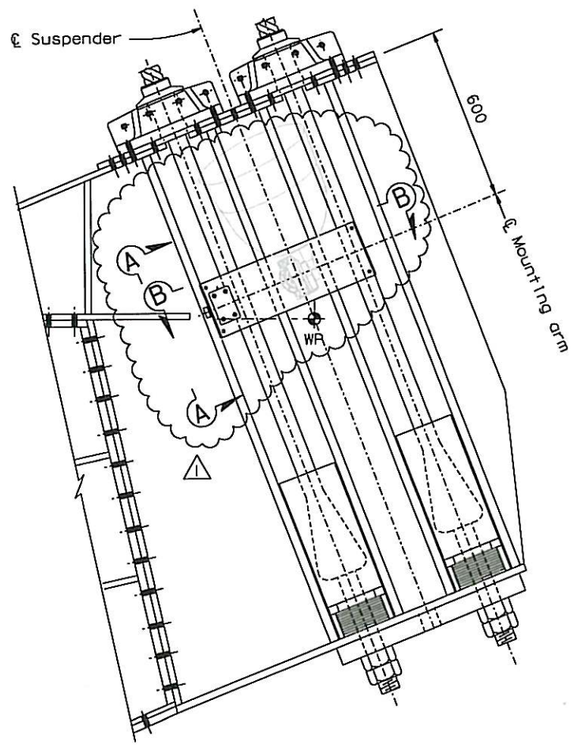

MOUNT TYPE 1
1:10

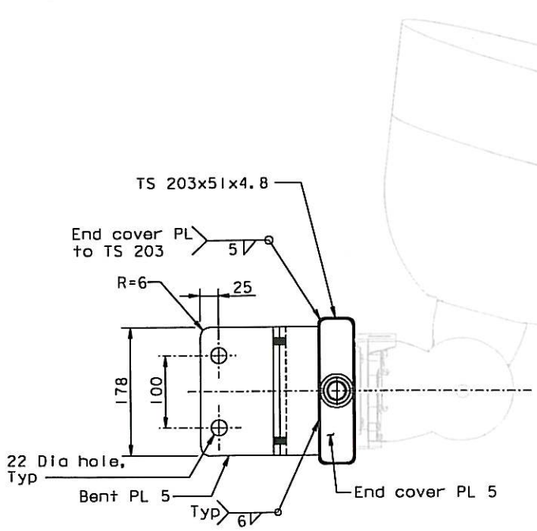

SECTION A-A
Not to scale

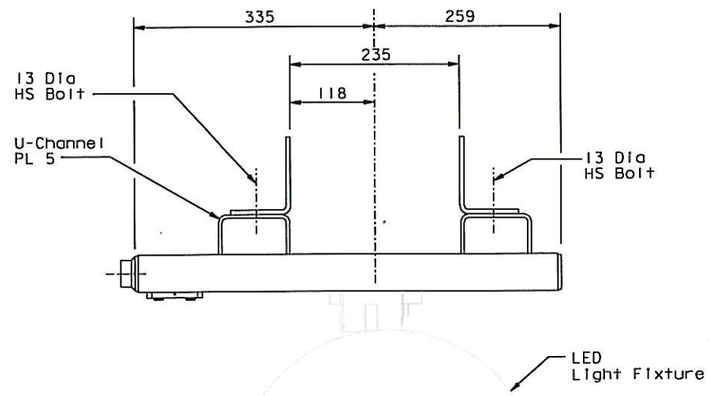

SECTION B-B
Not to scale

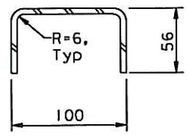

SECTION C-C
1:2.5

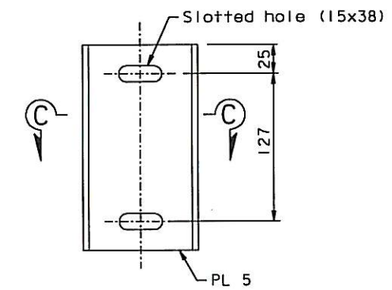

U-CHANNEL FOR MAU
1:2.5

NOTES:

1. The Contractor shall provide holes for light assembly per manufacturer's recommendations, subject to review and approval by the Engineer.
2. Light assembly details and dimensions may be adjusted for fabrication to suit lighting manufacturer's means and methods. Adjusted dimensions shall be subject to review and approval by the Engineer.
3. For bracket details not shown, see "Lighting Details" sheets.
4. Plates for light fixture mount assemblies shall be ASTM A36 steel. TS shapes shall be ASTM A500, Grade B steel.
5. A307 bolts, installed snug tight with a lock nut, may be used in lieu of A325 bolts, subject to review and approval of the Engineer. Lock nut shall be Tri-Loc, manufactured by Lok-Mor, Inc or equivalent. All bolt assemblies shall be galvanized.

DETAILS
TOWER AND SUSPENSION CABLE MAIN SUSPENDER UPLIGHTS

SCALE AS NOTED

E-257

ALL DIMENSIONS ARE IN MILLIMETERS UNLESS OTHERWISE SHOWN.

REVISED BY	DATE REVISED
GAM 10/00	TYL 10/00

CALCULATED/DESIGNED BY — CHECKED BY

DESIGN OVERSIGHT — BOB ZANDIPOUR

STATE OF CALIFORNIA - DEPARTMENT OF TRANSPORTATION

Caltrans

SAS STRUCTURE

CONTRACT CHANGE ORDER NO. 252
SHEET 38 OF 44

REQUESTS FOR INFORMATION NOT ADDRESSED IN THIS CCO REMAIN IN FORCE

MARK	DATE	DESCRIPTIONS	BY	CH'D	CCO#
1	11/20/12	ROADWAY LEVEL LED FIXTURE DETAILS	DT	MN	252

REVISIONS

REGISTERED PROFESSIONAL ENGINEER Marwan N. Nader No. C 054426 Exp. 12/31/13 CIVIL STATE OF CALIFORNIA

FOR REVISIONS ONLY

LAST REVISION 04-19-00 — DATE PLOTTED => 20 NOV 2012 — TIME PLOTTED => 10:05:03

FOR REDUCED PLANS ORIGINAL SCALE IN MILLIMETERS 0 20 40 60 80

FILE => I:\bb\04-01200I\sas\contract plans and cco\cco\cco#252\2-update 11-20-12\dgn\40120fud257.dgn
USERNAME => DWinrow

CU 04251 — EA 01 20F1

DIST	COUNTY	ROUTE	KILOMETER POST TOTAL PROJECT	SHEET NO.	TOTAL SHEETS
04	SF	80	13.2/13.9	267R3	1204

REGISTERED ENGINEER-CIVIL

12-6-04

PLANS APPROVAL DATE

REGISTERED PROFESSIONAL ENGINEER T. W. SPARKS No. E16039 Exp. 9-30-05 ELECTRICAL STATE OF CALIFORNIA

The State of California or its officers or agents shall not be responsible for the accuracy or completeness of electronic copies of this plan sheet.

T.Y. LIN / MOFFATT & NICHOL
825 BATTERY STREET
SAN FRANCISCO, CA 94111

Caltrans now has a web site! To get to the web site, go to: http://www.dot.ca.gov

Caltrans Metric

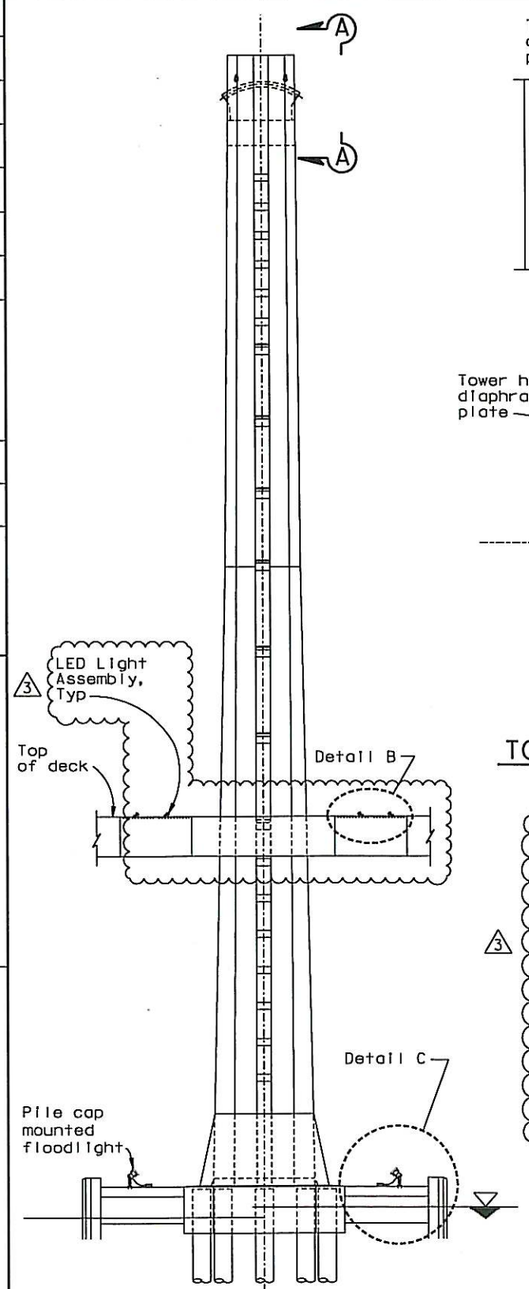

TOWER ELEVATION
1:400

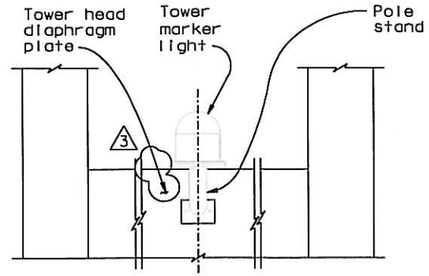

SECTION A-A
Not to scale

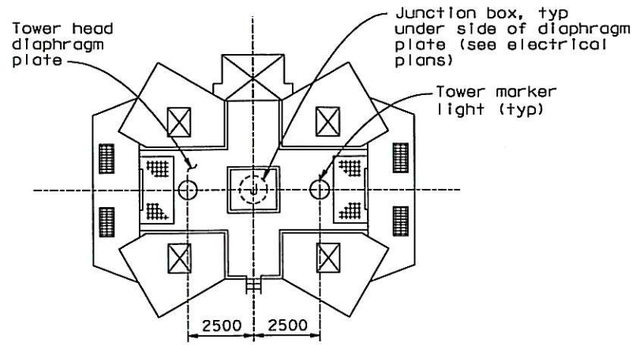

TOWER MARKER LIGHT PLAN
Not to scale

BASE DETAIL
Not to scale

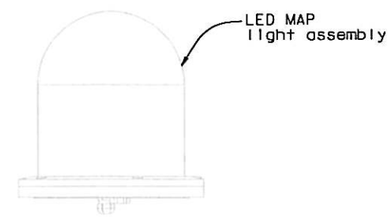

TOWER MARKER LIGHT DETAIL
Not to scale

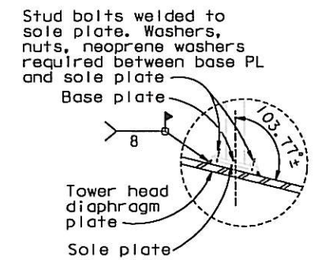

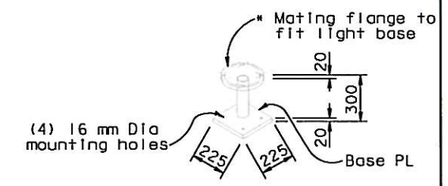

POLE STAND (See Note 5)
Not to scale

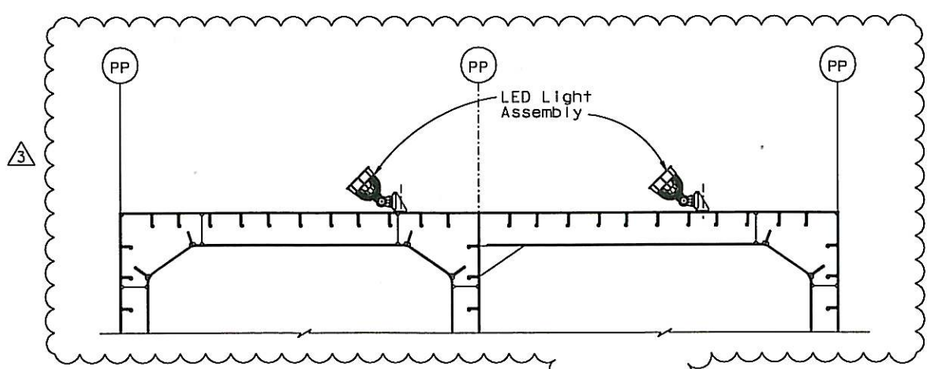

DETAIL B (See Note 4)
Not to scale

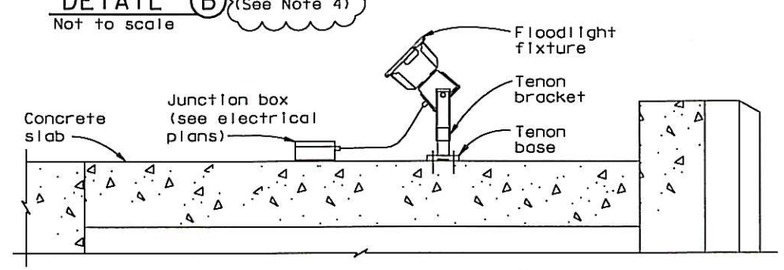

DETAIL C
Not to scale

NOTES:

1. All exposed metal parts of the light fixtures shall be marine grade stainless steel.
2. Provide lantern with appropriate mounting hardware and cable connectors.
3. Light assembly shall be in conformance with the Special Provisions. Light assembly attachments shall be per manufacturer's recommendations.
4. For light assembly mount details, see "SAS Structure Tower Lighting No.2" sheet. For locations of LED Light Assembly, see "Road Plans".
5. Pole stand shown schematically. To be furnished by Others.

CONTRACT CHANGE ORDER NO. 252
SHEET 39 OF 44

REQUESTS FOR INFORMATION NOT ADDRESSED IN THIS CCO REMAIN IN FORCE

MARK	DATE	DESCRIPTIONS	BY	CH'D	CCO#
3	11/20/12	ROADWAY LEVEL LED FIXTURE DETAILS	DT	TH	252
2	07/06/12	CABLE ELECTRICAL	TH	AB	7251
1	08/15/08	CABLE ELECTRICAL	TH	AS	72

REVISIONS

REGISTERED PROFESSIONAL ENGINEER Tien Hung Ho No. C 43990 Exp. 06/30/13 CIVIL STATE OF CALIFORNIA

FOR REVISIONS ONLY

DETAILS
TOWER AND SUSPENSION CABLE
SAS STRUCTURE TOWER LIGHTING NO. 1

SCALE AS NOTED

E-259

DESIGN OVERSIGHT	CALCULATED/DESIGNED BY	CHECKED BY	REVISED BY	DATE REVISED
BOB ZANDIPOUR	GAM 10/00	TYL 10/00		

STATE OF CALIFORNIA - DEPARTMENT OF TRANSPORTATION

SAS STRUCTURE

Caltrans

FOR REDUCED PLANS ORIGINAL SCALE IN MILLIMETERS 0 20 40 60 80

FILE => I:\bb\04-012001\sas\contract plans and cco\cco\cco#252\2-update 11-20-12\dgn\40120fud259.dgn
USERNAME => DWinrow

CU 04251 | EA 0120F1

LAST REVISION 04-19-00 | DATE PLOTTED => 20 NOV 2012 | TIME PLOTTED => 10:05:56

DIST	COUNTY	ROUTE	KILOMETER POST TOTAL PROJECT	SHEET NO.	TOTAL SHEETS
04	SF	80	13.2/13.9	268R2	1204

REGISTERED ENGINEER-CIVIL

12-6-04

PLANS APPROVAL DATE

REGISTERED PROFESSIONAL ENGINEER T. W. SPARKS No. E16039 Exp. 9-30-05 ELECTRICAL STATE OF CALIFORNIA

The State of California or its officers or agents shall not be responsible for the accuracy or completeness of electronic copies of this plan sheet.

T.Y. LIN / MOFFATT & NICHOL
825 BATTERY STREET
SAN FRANCISCO, CA 94111

Caltrans now has a web site! To get to the web site, go to: http://www.dot.ca.gov

Caltrans Metric

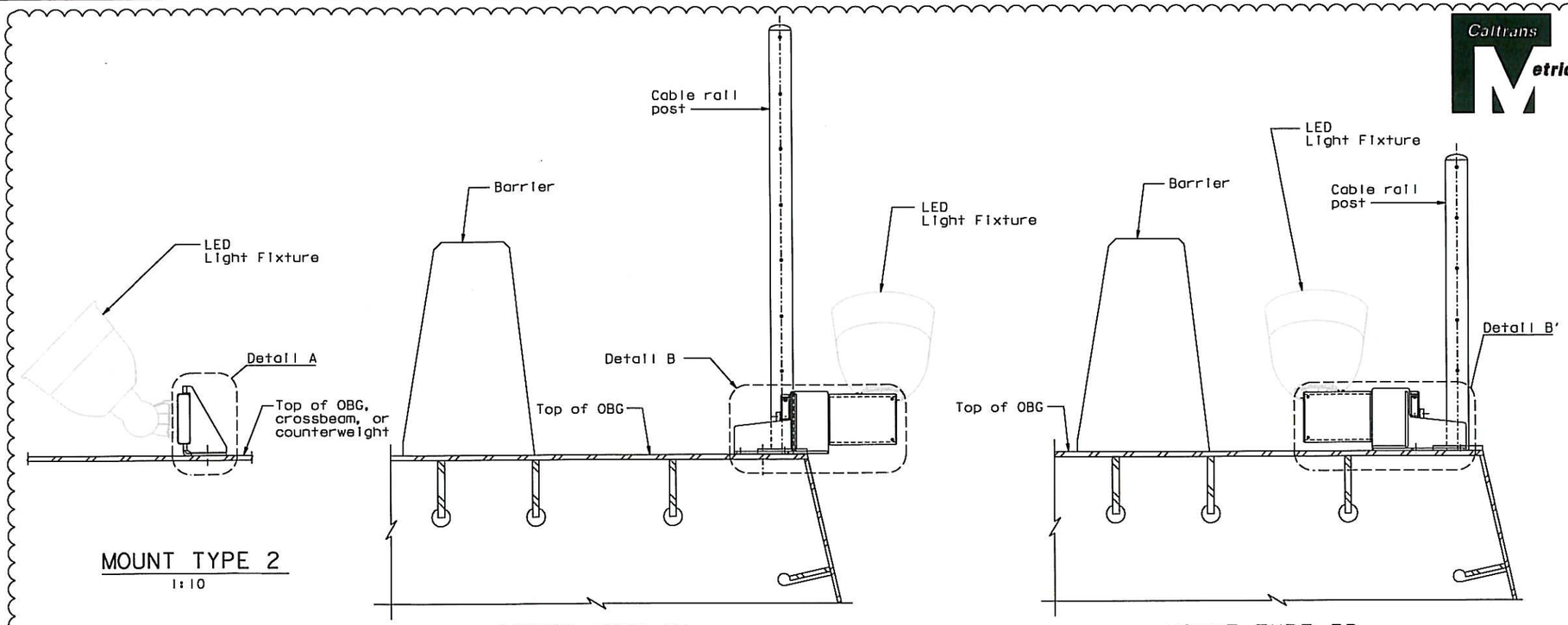

MOUNT TYPE 2
1:10

MOUNT TYPE 3A (See Note 1)
1:10

MOUNT TYPE 3B
1:10

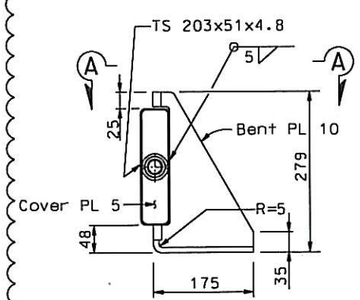

DETAIL A
1:5

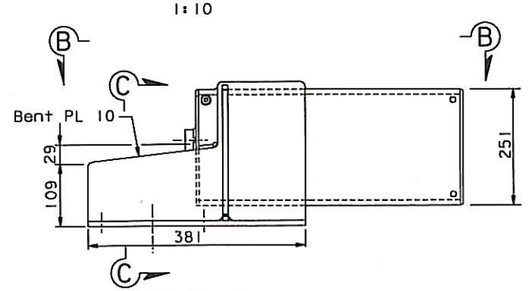

DETAIL B
1:5

Detail B' opposite hand (Cable railing not shown for clarity)

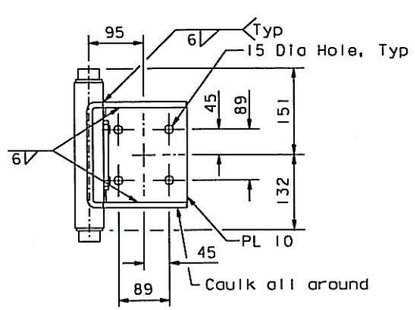

VIEW A-A
1:5

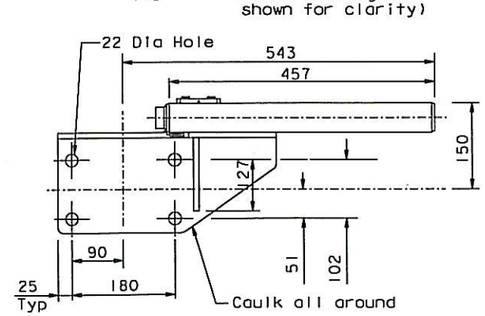

VIEW B-B
1:5

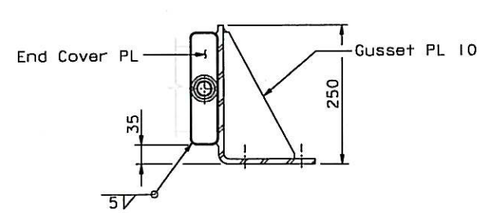

SECTION C-C
1:5

NOTES:

1. For mount type 3A, LED light fixture shall be oriented to overhang the girder.
2. The Contractor shall provide holes for light assembly per manufacturer's recommendations, subject to review and approval of the Engineer.
3. Light assembly details and dimensions may be adjusted for fabrication to suit lighting manufacturer's means and methods. Adjusted dimensions shall be subject to review and approval by the Engineer.
4. Plates for light fixture mount assemblies shall be ASTM A36 steel. TS shapes shall be ASTM A500-Grade B steel.
5. For details of connection of LED light fixture mounts to the OBG, crossbeam, or counterweight, see "Lighting Details No.1" sheet.

REQUESTS FOR INFORMATION NOT ADDRESSED IN THIS CCO REMAIN IN FORCE

MARK	DATE	DESCRIPTIONS	BY	CH'D	CCO#
2	11/20/12	ROADWAY LEVEL LED FIXTURE DETAILS	DT	MN	252
1	08/25/08	LIGHTING REVISIONS	TH	MN	43

REVISIONS

CONTRACT CHANGE ORDER NO. 252
SHEET 40 OF 44

REGISTERED PROFESSIONAL ENGINEER Marwan N. Nader No. C 054426 Exp. 12/31/13 CIVIL STATE OF CALIFORNIA

FOR REVISIONS ONLY

DETAILS
TOWER AND SUSPENSION CABLE
SAS STRUCTURE TOWER LIGHTING NO. 2

SCALE AS NOTED

E-260

DATE	REVISED BY	DATE	REVISED BY
10/00	GAM	10/00	TYL

CALCULATED/DESIGNED BY — CHECKED BY

DESIGN OVERSIGHT — BOB ZANDIPOUR

STATE OF CALIFORNIA - DEPARTMENT OF TRANSPORTATION

Caltrans

SAS STRUCTURE

LAST REVISION 04-19-00 — DATE PLOTTED => 20 NOV 2012 — TIME PLOTTED => 10:07:00

FOR REDUCED PLANS ORIGINAL SCALE IN MILLIMETERS 0 20 40 60 80

FILE => I:\bb\04-012001\sas\contract plans and cco\cco\cco#252\2-update 11-20-12\dgn\40120fud260.dgn
USERNAME => DWinrow

CO 0425I — EA 0120F1

DIST	COUNTY	ROUTE	KILOMETER POST TOTAL PROJECT	SHEET NO.	TOTAL SHEETS
04	SF	80	13.2/13.9	269R	1204

REGISTERED ENGINEER-CIVIL

12-6-04

PLANS APPROVAL DATE

REGISTERED PROFESSIONAL ENGINEER T. W. SPARKS No. E16039 Exp. 9-30-05 ELECTRICAL STATE OF CALIFORNIA

The State of California or its officers or agents shall not be responsible for the accuracy or completeness of electronic copies of this plan sheet.

T.Y. LIN / MOFFATT & NICHOL
825 BATTERY STREET
SAN FRANCISCO, CA 94111

Caltrans now has a web site! To get to the web site, go to: http://www.dot.ca.gov

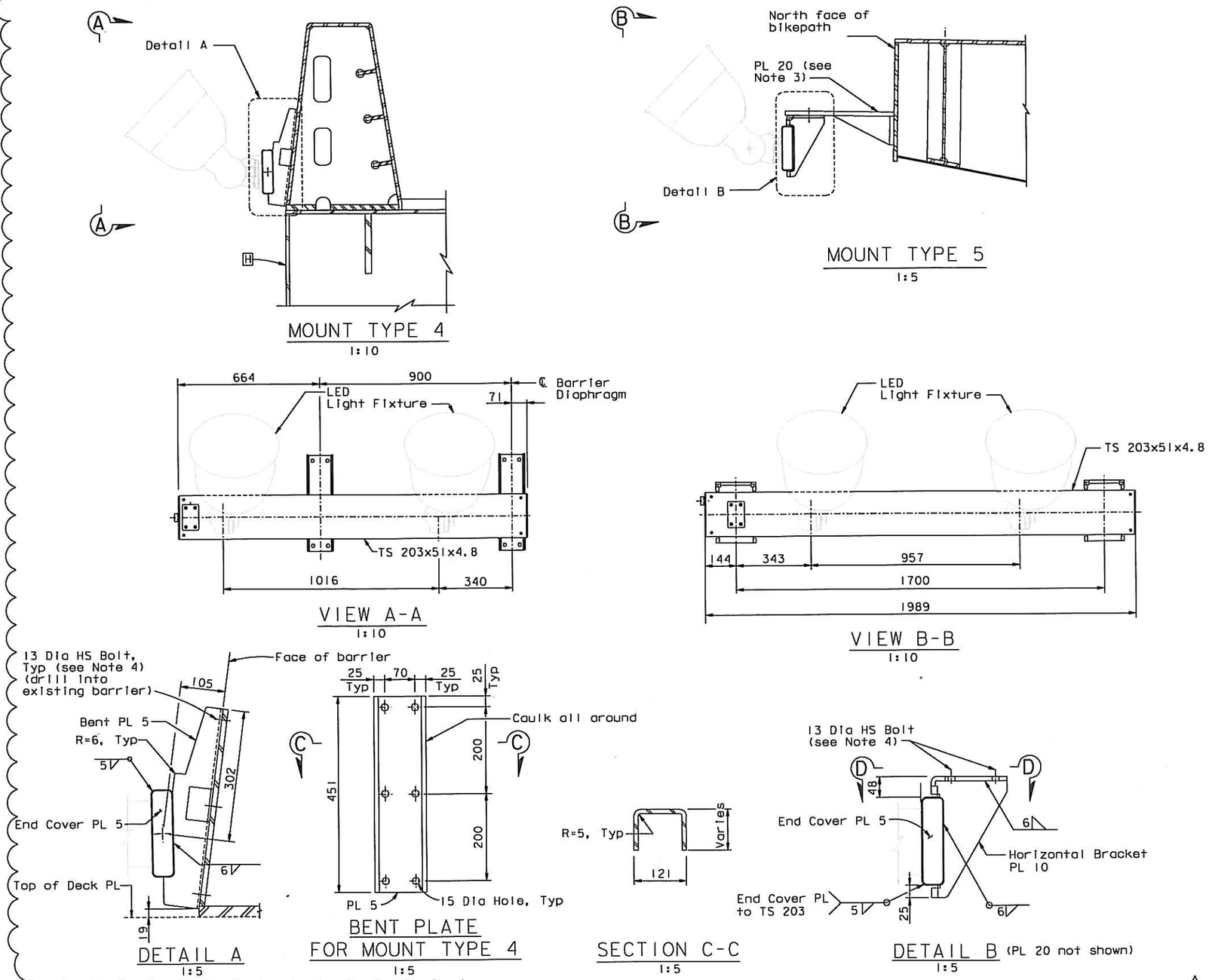

NOTES:

1. The Contractor shall provide holes for light assembly per manufacturer's recommendations, subject to review and approval by the Engineer.
2. Light assembly details and dimensions may be adjusted for fabrication to suit lighting manufacturer's means and methods. Adjusted dimensions shall be subject to review and approval by the Engineer.
3. For details not shown, see "Lighting Details No. 1" sheet.
4. A307 bolts, installed snug tight with a lock nut, may be used in lieu of A325 bolts, subject to review and approval of the Engineer. Lock nut shall be Tri-Loc, manufactured by Lok-Mor, Inc or equivalent. All bolt assemblies shall be galvanized.

CONTRACT CHANGE ORDER NO. 252
SHEET 41 OF 44

REQUESTS FOR INFORMATION NOT ADDRESSED IN THIS CCO REMAIN IN FORCE

MARK	DATE	DESCRIPTIONS	BY	CH'D	CCO#
1	11/20/12	ROADWAY LEVEL LED FIXTURE DETAILS	DT	MN	252

REVISIONS

REGISTERED PROFESSIONAL ENGINEER Marwan N. Nader No. C 054426 Exp. 12/31/13 CIVIL STATE OF CALIFORNIA

FOR REVISIONS ONLY

DETAILS
TOWER AND SUSPENSION CABLE
SAS STRUCTURE TOWER LIGHTING NO. 3

SCALE AS NOTED

E-261

CALCULATED/ DESIGNED BY	GAM	DATE 10/00	REVISED BY
CHECKED BY	TYL	10/00	DATE REVISED

DESIGN OVERSIGHT
BOB ZANDIPOUR

STATE OF CALIFORNIA - DEPARTMENT OF TRANSPORTATION
Caltrans

SAS STRUCTURE

FOR REDUCED PLANS ORIGINAL SCALE IN MILLIMETERS 0 20 40 60 80

FILE => I:\bb\04-012001\sas\contract plans and cco\cco\cco#252\2-update 11-20-12\dgn\40120fud261.dgn
USERNAME => DWinrow

CU 04251 EA 0120F1

LAST REVISION 04-19-00
DATE PLOTTED => 20 NOV 2012
TIME PLOTTED => 10:08:17

DIST	COUNTY	ROUTE	KILOMETER POST TOTAL PROJECT	SHEET No	TOTAL SHEETS
04	SF	80	13.2/13.9	276 R5	1204

REGISTERED ELECTRICAL ENGINEER 12/19/02 DATE

12-6-04
PLANS APPROVAL DATE

REGISTERED PROFESSIONAL ENGINEER JENS ERLINGSSON No. 8249 Exp. 9/30/06 ELECTRICAL STATE OF CALIFORNIA

PB POWER, Inc.
A Parsons Brinckerhoff Company
303 Second St., Suite 700N
San Francisco, CA 94107-1317

The State of California or its officers or agents shall not be responsible for the accuracy or completeness of electronic copies of this plan sheet.

Caltrans now has a web site! To get to the web site, go to http://www.dot.ca.gov

Caltrans Metric

REGISTERED PROFESSIONAL ENGINEER SYN YEE CHIN No. 18186 ELECTRICAL STATE OF CALIFORNIA — 4 — FOR REVISION ONLY

REGISTERED PROFESSIONAL ENGINEER DAVID H. OTO No. 10699 Exp. 06/30/2013 ELECTRICAL STATE OF CALIFORNIA — 5 3 — FOR REVISION ONLY

REGISTERED PROFESSIONAL ENGINEER FADI WALIEDDINE No. 11465 Exp. 12/31/2009 ELECTRICAL STATE OF CALIFORNIA — 2 — FOR REVISION ONLY

REGISTERED PROFESSIONAL ENGINEER MICHELL FUMIO TAKATA No. E 8651 Exp. 9/30/2008 ELECTRICAL STATE OF CALIFORNIA — 1 — FOR REVISION ONLY

REQUEST FOR INFORMATION NOT ADDRESSED IN THIS CCO REMAIN IN FORCE

MARK	DATE	DESCRIPTIONS	BY	CH'D	CCO#
5	11/16/12	ROADWAY LEVEL LED FIXTURE DETAILS	RSB	RG	252
4	05/14/12	ADDITIONAL CABLE LEDs	CK	NK	250
3	03/02/12	ADDITIONAL CABLE LEDs	RR	RG	167S2
2	10/10/08	LIGHTING REVISIONS.	SPO MP	RG ES	43
1	02/19/08	ELECTRICAL MODIFICATIONS.	MP EL	RR	42

REVISIONS

CONTRACT CHANGE ORDER NO. 252
SHEET 42 OF 44

CCO 167S2 RENUMBERED TO CCO 250

MAIN CABLE ROADWAY AND DOWNLIGHT LIGHTING SCHEDULE

Circuit Number	Station	Location: Roadway side	Location: Suspend at Panel Point	Mounting	Lighting Fixture Type		
S-3021	56+78	-	PP-22	Main Cable	MSR		
S-3021	57+18	-	PP-30	Main Cable	MSR		
S-3021	57+58	-	PP-38	Main Cable	MSR		
S-3022	57+98	-	PP-46	Main Cable	MSR		
S-3022	58+38	-	PP-54	Main Cable	MSR		
S-3022	58+78	-	PP-62	Main Cable	MSR		
S-3023	59+18	-	PP-70	Main Cable	MSR		
S-3023	59+58	-	PP-78	Main Cable	MSR		
S-3023	59+78	-	PP-82	Main Cable	MSR		
A-3011	56+18	-	PP-10	Main Cable	MAD		
A-3011	56+28	-	PP-12	Main Cable	MAD		
A-3011	56+38	-	PP-14	Main Cable	MAD		
A-3011	56+48	-	PP-16	Main Cable	MAD		
A-3011	56+58	-	PP-18	Main Cable	MAD		
A-3011	56+68	-	PP-20	Main Cable	MAD		
A-3011	56+78	-	PP-22	Main Cable	MAD		
A-3011	56+88	-	PP-24	Main Cable	MAD		
A-3011	56+98	-	PP-26	Main Cable	MAD		
A-3011	57+08	-	PP-28	Main Cable	MAD		
A-3011	57+18	-	PP-30	Main Cable	MAD		
A-3011	57+28	-	PP-32	Main Cable	MAD		
A-3011	57+38	-	PP-34	Main Cable	MAD		
A-3011	57+48	-	PP-36	Main Cable	MAD		
A-3011	57+58	-	PP-38	Main Cable	MAD		
A-3011	57+68	-	PP-40	Main Cable	MAD		
A-3012	57+88	-	PP-44	Main Cable	MAD		
A-3012	57+98	-	PP-46	Main Cable	MAD		
A-3012	58+08	-	PP-48	Main Cable	MAD		
A-3012	58+18	-	PP-50	Main Cable	MAD		
A-3012	58+28	-	PP-52	Main Cable	MAD		
A-3012	58+38	-	PP-54	Main Cable	MAD		
A-3012	58+48	-	PP-56	Main Cable	MAD		
A-3012	58+58	-	PP-58	Main Cable	MAD		
A-3012	58+68	-	PP-60	Main Cable	MAD		
A-3013	58+78	-	PP-62	Main Cable	MAD		
A-3013	58+88	-	PP-64	Main Cable	MAD		
A-3013	58+98	-	PP-66	Main Cable	MAD		
A-3013	59+08	-	PP-68	Main Cable	MAD		
A-3013	59+18	-	PP-70	Main Cable	MAD		
A-3013	59+28	-	PP-72	Main Cable	MAD		
A-3013	59+38	-	PP-74	Main Cable	MAD		
A-3013	59+48	-	PP-76	Main Cable	MAD		
A-3013	59+58	-	PP-78	Main Cable	MAD		
A-3013	59+68	-	PP-80	Main Cable	MAD		
A-3013	59+78	-	PP-82	Main Cable	MAD		
A-3013	59+88	-	PP-84	Main Cable	MAD		
A-3013	59+98	-	PP-86	Main Cable	MAD		
A-3013	60+08	-	PP-88	Main Cable	MAD		
A-3013	60+18	-	PP-90	Main Cable	MAD		
A-3013	60+28	-	PP-92	Main Cable	MAD		
A-3013	60+38	-	PP-94	Main Cable	MAD		

SUSPENDER UPLIGHT SCHEDULE

Fixture Number	Fixture Type	Quantity and Max VA	Fixture Location: Panel Point	Mount Type *	Fixture Mounting Method	Driver Box Size	Driver Box Location: Panel Point	Driver Box Mounting Method
A-3001-1	MAU	1-72.18	PP10-1700	Type 3B	Bolts through deck plate	1061x360x229	PP10	Clamps to suspender bracket
A-3001-2	MAU	1-72.18	PP10+2600	Type 2	Studs on sole plate			
A-3001-3L/R	MAU	2-126.32	PP12 Left and Right **	Type 1	Bolts to suspender plate	1061x360x229	PP12	Clamps to suspender bracket
A-3001-4L/R	MAU	2-126.32	PP14 Left and Right **	Type 1	Bolts to suspender plate	1061x360x229	PP14	Clamps to suspender bracket
A-3001-5L/R	MAU	2-180.45	PP16 Left and Right **	Type 1	Bolts to suspender plate	1061x360x229	PP16	Clamps to suspender bracket
A-3001-6L/R	MAU	2-180.45	PP18 Left and Right **	Type 1	Bolts to suspender plate	1061x360x229	PP18	Clamps to suspender bracket
A-3001-7L/R	MAU	2-180.45	PP20 Left and Right **	Type 1	Bolts to suspender plate	1061x360x229	PP20	Clamps to suspender bracket
A-3001-8L/R	MAU	2-180.45	PP22 Left and Right **	Type 1	Bolts to suspender plate	1061x360x229	PP22	Clamps to suspender bracket
A-3001-9L/R	MAU	2-288.72	PP24 Left and Right **	Type 1	Bolts to suspender plate	1061x360x229	PP24	Clamps to suspender bracket
A-3002-1L/R	MAU	2-377.76	PP26 Left and Right **	Type 1	Bolts to suspender plate	1061x360x229	PP26	Clamps to suspender bracket
A-3002-2L/R	MAU	2-377.76	PP28 Left and Right **	Type 1	Bolts to suspender plate	1061x360x229	PP28	Clamps to suspender bracket
A-3002-3L/R	MAU	2-377.76	PP30 Left and Right **	Type 1	Bolts to suspender plate	1061x360x229	PP30	Clamps to suspender bracket
A-3002-4L/R	MAU	2-377.76	PP32 Left and Right **	Type 1	Bolts to suspender plate	1061x360x229	PP32	Clamps to suspender bracket
A-3002-5L/R	MAU	2-377.76	PP34 Left and Right **	Type 1	Bolts to suspender plate	1061x360x229	PP34	Clamps to suspender bracket
A-3002-6L/R	MAU	2-377.76	PP36 Left and Right **	Type 1	Bolts to suspender plate	1061x360x229	PP36	Clamps to suspender bracket
A-3003-1L/R	MAU	2-377.76	PP38 Left and Right **	Type 1	Bolts to suspender plate	1061x360x229	PP38	Clamps to suspender bracket
A-3003-2L/R	MAU	2-377.76	PP40 Left and Right **	Type 1	Bolts to suspender plate	1061x360x229	PP40	Clamps to suspender bracket
A-3003-3L/R	MAU	2-377.76	PP42 Left and Right **	Type 1	Bolts to suspender plate	1061x360x229	PP42	Clamps to suspender bracket
A-3003-4L/R	MAU	2-377.76	PP44 Left and Right **	Type 1	Bolts to suspender plate	1061x360x229	PP44	Clamps to suspender bracket
A-3003-5L/R	MAU	2-377.76	PP46 Left and Right **	Type 1	Bolts to suspender plate	1061x360x229	PP46	Clamps to suspender bracket
A-3003-6L/R	MAU	2-377.76	PP48 Left and Right **	Type 1	Bolts to suspender plate	1061x360x229	PP48	Clamps to suspender bracket
A-3004-1L/R	MAU	2-377.76	PP50 Left and Right **	Type 1	Bolts to suspender plate	1061x360x229	PP50	Clamps to suspender bracket
A-3004-2L/R	MAU	2-377.76	PP52 Left and Right **	Type 1	Bolts to suspender plate	1061x360x229	PP52	Clamps to suspender bracket
A-3004-3L/R	MAU	2-377.76	PP54 Left and Right **	Type 1	Bolts to suspender plate	1061x360x229	PP54	Clamps to suspender bracket
A-3004-4L/R	MAU	2-377.76	PP56 Left and Right **	Type 1	Bolts to suspender plate	1061x360x229	PP56	Clamps to suspender bracket
A-3004-5L/R	MAU	2-377.76	PP58 Left and Right **	Type 1	Bolts to suspender plate	1061x360x229	PP58	Clamps to suspender bracket
A-3004-6L/R	MAU	2-377.76	PP60 Left and Right **	Type 1	Bolts to suspender plate	1061x360x229	PP60	Clamps to suspender bracket
A-3005-1L/R	MAU	2-360.68	PP62 Left and Right **	Type 1	Bolts to suspender plate	1061x360x229	PP62	Clamps to suspender bracket
A-3005-2L/R	MAU	2-225.42	PP64 Left and Right **	Type 1	Bolts to suspender plate	1061x360x229	PP64	Clamps to suspender bracket
A-3005-3L/R	MAU	2-225.42	PP66 Left and Right **	Type 1	Bolts to suspender plate	1061x360x229	PP66	Clamps to suspender bracket
A-3005-4L/R	MAU	2-225.42	PP68 Left and Right **	Type 1	Bolts to suspender plate	1061x360x229	PP68	Clamps to suspender bracket
A-3005-5L/R	MAU	2-225.42	PP70 Left and Right **	Type 1	Bolts to suspender plate	1061x360x229	PP70	Clamps to suspender bracket
A-3005-6L/R	MAU	2-225.42	PP72 Left and Right **	Type 1	Bolts to suspender plate	1061x360x229	PP72	Clamps to suspender bracket
A-3006-1L/R	MAU	2-218.73	PP74 Left and Right **	Type 1	Bolts to suspender plate	1061x360x229	PP74	Clamps to suspender bracket
A-3006-2L/R	MAU	2-218.73	PP76 Left and Right **	Type 1	Bolts to suspender plate	1061x360x229	PP76	Clamps to suspender bracket
A-3006-3L/R	MAU	2-218.73	PP78 Left and Right **	Type 1	Bolts to suspender plate	1061x360x229	PP78	Clamps to suspender bracket
A-3006-4L/R	MAU	2-153.11	PP80 Left and Right **	Type 1	Bolts to suspender plate	1061x360x229	PP80	Clamps to suspender bracket
A-3006-5L/R	MAU	2-153.11	PP82 Left and Right **	Type 1	Bolts to suspender plate	1061x360x229	PP82	Clamps to suspender bracket
A-3006-6L/R	MAU	2-153.11	PP84 Left and Right **	Type 1	Bolts to suspender plate	1061x360x229	PP84	Clamps to suspender bracket
A-3006-7L/R	MAU	2-153.11	PP86 Left and Right **	Type 1	Bolts to suspender plate	1061x360x229	PP86	Clamps to suspender bracket
A-3006-8L/R	MAU	2-153.11	PP88 Left and Right **	Type 1	Bolts to suspender plate	1061x360x229	PP88	Clamps to suspender bracket
A-3006-9	MAU	1-153.11	PP90 Left **	Type 1	Bolts to suspender plate	1061x360x229	PP90	Clamps to suspender bracket
A-3006-10	MAU	1-87.49	PP91	Type 2	Studs on sole plate	1061x360x229	PP92	Clamps to suspender bracket
A-3006-11	MAU	1-87.49	PP93	Type 2	Studs on sole plate			

* See Structural Plans For Information On MOunt Types
** As Seen If Standing On OBG At Indicated Panel Point, Facing Suspender Bracket

NOTE:

1. For Roadway and Suspender lighting wiring diagrams, see sheets E-236 to E-240.

SAS SUPERSTRUCTURE - WB

DETAILS
TOWER AND SUSPENSION CABLE LIGHTING SCHEDULES
NO SCALE

E-271

STATE OF CALIFORNIA - DEPARTMENT OF TRANSPORTATION
Caltrans

DESIGN OVERSIGHT
BEHZAD GOLEMOHAMMADI

CALCULATED/ DESIGNED BY	JP	DATE 09/01	REVISED BY
CHECKED BY	EDC	11/01	DATE REVISED

LAST REVISION 11-16-12
DATE PLOTTED => 6/26/2013
TIME PLOTTED => 10:32:53 AM

FOR REDUCED PLANS ORIGINAL SCALE IS IN MILLIMETERS 0 20 40 60 80
DGN FILE =>04-0120F1_0276R05.dgn
USERNAME =>Melsheimer
CU 04251
EA 0120F1

REGISTERED PROFESSIONAL ENGINEER — SYN YEE CHIN — No. 18186 — Exp. 09/30/2013 — ELECTRICAL — STATE OF CALIFORNIA (3)

Syn Yee Chin
FOR REVISION ONLY

REGISTERED PROFESSIONAL ENGINEER — DAVID H. OTO — No. 10699 — Exp. 06/30/2013 — ELECTRICAL — STATE OF CALIFORNIA (2) (4)

David H. Oto
FOR REVISION ONLY

REGISTERED PROFESSIONAL ENGINEER — MARCELL FUMIO TAKATA — No. E 8651 — Exp. 9/30/2008 — ELECTRICAL — STATE OF CALIFORNIA (1)

M F Takata
FOR REVISION ONLY

REQUEST FOR INFORMATION NOT ADDRESSED IN THIS CCO REMAIN IN FORCE

MARK	DATE	DESCRIPTIONS	BY	CH'D	CCO#
4	11/16/12	ROADWAY LEVEL LED FIXTURE DETAILS	RSB	RG	252
3	05/14/12	ADDITIONAL CABLE LEDs	CK	NK	250
2	03/02/12	ADDITIONAL CABLE LEDs	RR	RG	167S2
1	02/19/08	ELECTRICAL MODIFICATIONS	MP EL	RR	42

REVISIONS

CONTRACT CHANGE ORDER NO. 252
SHEET 43 OF 44

CCO 167S2 RENUMBERED
CCO 250

Caltrans Metric

DIST	COUNTY	ROUTE	KILOMETER POST TOTAL PROJECT	SHEET No.	TOTAL SHEETS
04	SF	80	13.2/13.9	277 R4	1204

12/19/02
REGISTERED ELECTRICAL ENGINEER DATE

12-6-04
PLANS APPROVAL DATE

REGISTERED PROFESSIONAL ENGINEER — JENS ERLINGSSON — No. 8249 — Exp. 9/30/06 — ELECTRICAL — STATE OF CALIFORNIA

PB POWER, Inc.
A Parsons Brinckerhoff Company
303 Second St., Suite 700N
San Francisco, CA 94107-1317

The State of California or its officers or agents shall not be responsible for the accuracy or completeness of electronic copies of this plan sheet.

Caltrans now has a web site! To get to the web site, go to http://www.dot.ca.gov

MAIN CABLE ROADWAY AND DOWNLIGHT LIGHTING SCHEDULE

Circuit Number	Station	Location: Roadway side	Location: Suspend at Panel Point	Mounting	Ltg. Fixture Type		
S-3051	56+69		PP-22	Main Cable	MSR		
S-3051	57+09		PP-30	Main Cable	MSR		
S-3051	57+49		PP-38	Main Cable	MSR		
S-3052	57+89		PP-46	Main Cable	MSR		
S-3052	58+29		PP-54	Main Cable	MSR		
S-3052	58+69		PP-62	Main Cable	MSR		
S-3053	59+09		PP-70	Main Cable	MSR		
S-3053	59+49		PP-78	Main Cable	MSR		
S-3053	59+69		PP-82	Main Cable	MSR		
A-3041	56+09		PP-10	Main Cable	MAD		
A-3041	56+19		PP-12	Main Cable	MAD		
A-3041	56+29		PP-14	Main Cable	MAD		
A-3041	56+39		PP-16	Main Cable	MAD		
A-3041	56+49		PP-18	Main Cable	MAD		
A-3041	56+59		PP-20	Main Cable	MAD		
A-3041	56+69		PP-22	Main Cable	MAD		
A-3041	56+79		PP-24	Main Cable	MAD		
A-3041	56+89		PP-26	Main Cable	MAD		
A-3041	56+99		PP-28	Main Cable	MAD		
A-3041	57+09		PP-30	Main Cable	MAD		
A-3041	57+19		PP-32	Main Cable	MAD		
A-3041	57+29		PP-34	Main Cable	MAD		
A-3041	57+39		PP-36	Main Cable	MAD		
A-3041	57+49		PP-38	Main Cable	MAD		
A-3041	57+59		PP-40	Main Cable	MAD		
A-3042	57+79		PP-44	Main Cable	MAD		
A-3042	57+89		PP-46	Main Cable	MAD		
A-3042	57+99		PP-48	Main Cable	MAD		
A-3042	58+09		PP-50	Main Cable	MAD		
A-3042	58+19		PP-52	Main Cable	MAD		
A-3042	58+29		PP-54	Main Cable	MAD		
A-3042	58+39		PP-56	Main Cable	MAD		
A-3042	58+49		PP-58	Main Cable	MAD		
A-3042	58+59		PP-60	Main Cable	MAD		
A-3043	58+69		PP-62	Main Cable	MAD		
A-3043	58+79		PP-64	Main Cable	MAD		
A-3043	58+89		PP-66	Main Cable	MAD		
A-3043	58+99		PP-68	Main Cable	MAD		
A-3043	59+09		PP-70	Main Cable	MAD		
A-3043	59+19		PP-72	Main Cable	MAD		
A-3043	59+29		PP-74	Main Cable	MAD		
A-3043	59+39		PP-76	Main Cable	MAD		
A-3043	59+49		PP-78	Main Cable	MAD		
A-3043	59+59		PP-80	Main Cable	MAD		
A-3043	59+69		PP-82	Main Cable	MAD		
A-3043	59+79		PP-84	Main Cable	MAD		
A-3043	59+89		PP-86	Main Cable	MAD		
A-3043	59+99		PP-88	Main Cable	MAD		
A-3043	60+09		PP-90	Main Cable	MAD		
A-3043	60+19		PP-92	Main Cable	MAD		
A-3043	60+29		PP-94	Main Cable	MAD		

SUSPENDER UPLIGHT SCHEDULE (EASTBOUND)

Fixture Number	Fixture Type	Quantity and Max VA	Fixture Location: Panel Point	Fixture Mount Type *	Fixture Mounting Method	Driver Box Size	Driver Box Location: Panel Point	Driver Box Mounting Method
A-3031-1	MAU	1-72.18	PP10-1700	Type 3B	Bolts through deck plate	1061x360x229	PP10	Clamps to suspender bracket
A-3031-2	MAU	1-72.18	PP10+2600	Type 3B	Bolts through deck plate			
A-3031-3L/R	MAU	2-126.32	PP12 Left and Right **	Type 1	Bolts to suspender plate	1061x360x229	PP12	Clamps to suspender bracket
A-3031-4L/R	MAU	2-126.32	PP14 Left and Right **	Type 1	Bolts to suspender plate	1061x360x229	PP14	Clamps to suspender bracket
A-3031-5L/R	MAU	2-180.45	PP16 Left and Right **	Type 1	Bolts to suspender plate	1061x360x229	PP16	Clamps to suspender bracket
A-3031-6L/R	MAU	2-180.45	PP18 Left and Right **	Type 1	Bolts to suspender plate	1061x360x229	PP18	Clamps to suspender bracket
A-3031-7L/R	MAU	2-180.45	PP20 Left and Right **	Type 1	Bolts to suspender plate	1061x360x229	PP20	Clamps to suspender bracket
A-3031-8L/R	MAU	2-180.45	PP22 Left and Right **	Type 1	Bolts to suspender plate	1061x360x229	PP22	Clamps to suspender bracket
A-3031-9L/R	MAU	2-288.72	PP24 Left and Right **	Type 1	Bolts to suspender plate	1061x360x229	PP24	Clamps to suspender bracket
A-3032-1L/R	MAU	2-377.76	PP26 Left and Right **	Type 1	Bolts to suspender plate	1061x360x229	PP26	Clamps to suspender bracket
A-3032-2L/R	MAU	2-377.76	PP28 Left and Right **	Type 1	Bolts to suspender plate	1061x360x229	PP28	Clamps to suspender bracket
A-3032-3L/R	MAU	2-377.76	PP30 Left and Right **	Type 1	Bolts to suspender plate	1061x360x229	PP30	Clamps to suspender bracket
A-3032-4L/R	MAU	2-377.76	PP32 Left and Right **	Type 1	Bolts to suspender plate	1061x360x229	PP32	Clamps to suspender bracket
A-3032-5L/R	MAU	2-377.76	PP34 Left and Right **	Type 1	Bolts to suspender plate	1061x360x229	PP34	Clamps to suspender bracket
A-3032-6L/R	MAU	2-377.76	PP36 Left and Right **	Type 1	Bolts to suspender plate	1061x360x229	PP36	Clamps to suspender bracket
A-3033-1L/R	MAU	2-377.76	PP38 Left and Right **	Type 1	Bolts to suspender plate	1061x360x229	PP38	Clamps to suspender bracket
A-3033-2L/R	MAU	2-377.76	PP40 Left and Right **	Type 1	Bolts to suspender plate	1061x360x229	PP40	Clamps to suspender bracket
A-3033-3L/R	MAU	2-377.76	PP42 Left and Right **	Type 1	Bolts to suspender plate	1061x360x229	PP42	Clamps to suspender bracket
A-3033-4L/R	MAU	2-377.76	PP44 Left and Right **	Type 1	Bolts to suspender plate	1061x360x229	PP44	Clamps to suspender bracket
A-3033-5L/R	MAU	2-377.76	PP46 Left and Right **	Type 1	Bolts to suspender plate	1061x360x229	PP46	Clamps to suspender bracket
A-3033-6L/R	MAU	2-377.76	PP48 Left and Right **	Type 1	Bolts to suspender plate	1061x360x229	PP48	Clamps to suspender bracket
A-3034-1L/R	MAU	2-377.76	PP50 Left and Right **	Type 1	Bolts to suspender plate	1061x360x229	PP50	Clamps to suspender bracket
A-3034-2L/R	MAU	2-377.76	PP52 Left and Right **	Type 1	Bolts to suspender plate	1061x360x229	PP52	Clamps to suspender bracket
A-3034-3L/R	MAU	2-377.76	PP54 Left and Right **	Type 1	Bolts to suspender plate	1061x360x229	PP54	Clamps to suspender bracket
A-3034-4L/R	MAU	2-377.76	PP56 Left and Right **	Type 1	Bolts to suspender plate	1061x360x229	PP56	Clamps to suspender bracket
A-3034-5L/R	MAU	2-377.76	PP58 Left and Right **	Type 1	Bolts to suspender plate	1061x360x229	PP58	Clamps to suspender bracket
A-3034-6L/R	MAU	2-377.76	PP60 Left and Right **	Type 1	Bolts to suspender plate	1061x360x229	PP60	Clamps to suspender bracket
A-3035-1L/R	MAU	2-360.68	PP62 Left and Right **	Type 1	Bolts to suspender plate	1061x360x229	PP62	Clamps to suspender bracket
A-3035-2L/R	MAU	2-225.42	PP64 Left and Right **	Type 1	Bolts to suspender plate	1061x360x229	PP64	Clamps to suspender bracket
A-3035-3L/R	MAU	2-225.42	PP66 Left and Right **	Type 1	Bolts to suspender plate	1061x360x229	PP66	Clamps to suspender bracket
A-3035-4L/R	MAU	2-225.42	PP68 Left and Right **	Type 1	Bolts to suspender plate	1061x360x229	PP68	Clamps to suspender bracket
A-3035-5L/R	MAU	2-225.42	PP70 Left and Right **	Type 1	Bolts to suspender plate	1061x360x229	PP70	Clamps to suspender bracket
A-3035-6L/R	MAU	2-225.42	PP72 Left and Right **	Type 1	Bolts to suspender plate	1061x360x229	PP72	Clamps to suspender bracket
A-3036-1L/R	MAU	2-218.73	PP74 Left and Right **	Type 1	Bolts to suspender plate	1061x360x229	PP74	Clamps to suspender bracket
A-3036-2L/R	MAU	2-218.73	PP76 Left and Right **	Type 1	Bolts to suspender plate	1061x360x229	PP76	Clamps to suspender bracket
A-3036-3L/R	MAU	2-218.73	PP78 Left and Right **	Type 1	Bolts to suspender plate	1061x360x229	PP78	Clamps to suspender bracket
A-3036-4L/R	MAU	2-153.11	PP80 Left and Right **	Type 1	Bolts to suspender plate	1061x360x229	PP80	Clamps to suspender bracket
A-3036-5L/R	MAU	2-153.11	PP82 Left and Right **	Type 1	Bolts to suspender plate	1061x360x229	PP82	Clamps to suspender bracket
A-3036-6L/R	MAU	2-153.11	PP84 Left and Right **	Type 1	Bolts to suspender plate	1061x360x229	PP84	Clamps to suspender bracket
A-3036-7L/R	MAU	2-153.11	PP86 Left and Right **	Type 1	Bolts to suspender plate	1061x360x229	PP86	Clamps to suspender bracket
A-3036-8L/R	MAU	2-153.11	PP88 Left and Right **	Type 1	Bolts to suspender plate	1061x360x229	PP88	Clamps to suspender bracket
A-3036-9	MAU	1-153.11	PP90 Right **	Type 1	Bolts to suspender plate	1061x360x229	PP90	Clamps to suspender bracket
A-3036-10	MAU	1-87.49	PP91	Type 3B	Bolts through deck plate	1061x360x229	PP92	Clamps to suspender bracket
A-3036-11	MAU	1-87.49	PP93	Type 3B	Bolts through deck plate			

* See Structural Plans For Information On MOunt Types
** As Seen If Standing On OBG At Indicated Panel Point, Facing Suspender Bracket

NOTES:

1. For Roadway and Suspender lighting wiring diagrams, see sheets E-243 to E-247.

SAS SUPERSTRUCTURE - EB

DETAILS
TOWER AND SUSPENSION CABLE LIGHTING SCHEDULES
NO SCALE

E-272

STATE OF CALIFORNIA - DEPARTMENT OF TRANSPORTATION
Caltrans

DESIGN OVERSIGHT: BEHZAD GOLEMOHAMMADI

CALCULATED/DESIGNED BY: JP — CHECKED BY: EDC

DATE REVISED: 8/01 — REVISED BY: 11/01

DATE PLOTTED => 6/26/2013
TIME PLOTTED =>
LAST REVISION 11-16-12

FOR REDUCED PLANS ORIGINAL SCALE IS IN MILLIMETERS 0 20 40 60 80

DGN FILE =>04-0120f1_0277R04.dgn
USERNAME =>Melsheimer

CU 04251 | EA 0120F1

DIST.	COUNTY	ROUTE	KILOMETER POST TOTAL PROJECT	SHEET NO.	TOTAL SHEETS
04	SF	80	13.2/13.9	906R2	1204

George Baker
REGISTERED ENGINEER - CIVIL
12-6-04
PLANS APPROVAL DATE

REGISTERED PROFESSIONAL ENGINEER George S. Baker No. C 57112 Exp. 12/31/09 CIVIL STATE OF CALIFORNIA

The State of California or its officers or agents shall not be responsible for the accuracy or completeness of electronic copies of this plan sheet.

T.Y. LIN / MOFFATT & NICHOL
825 BATTERY STREET
SAN FRANCISCO, CA 94111

Caltrans now has a web site! To get to the web site, go to: http://www.dot.ca.gov

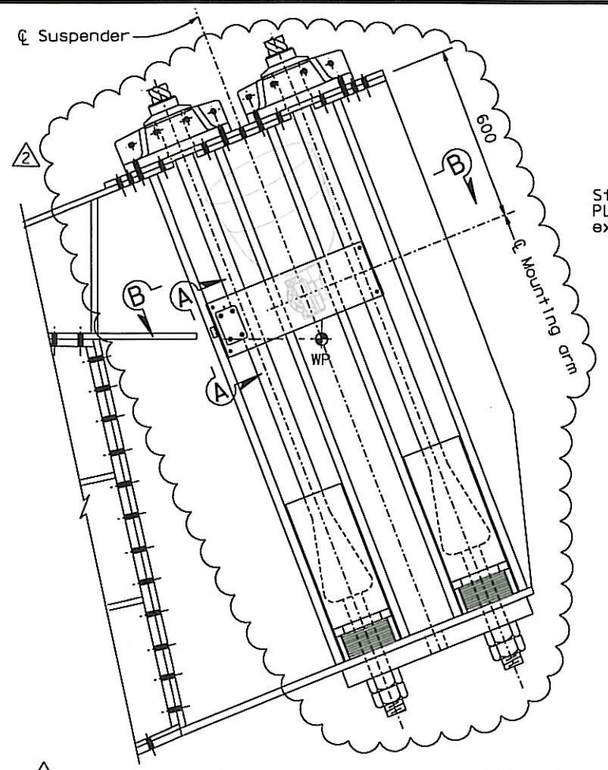

SUSPENDER ROPE LIGHTING DETAIL
1:10

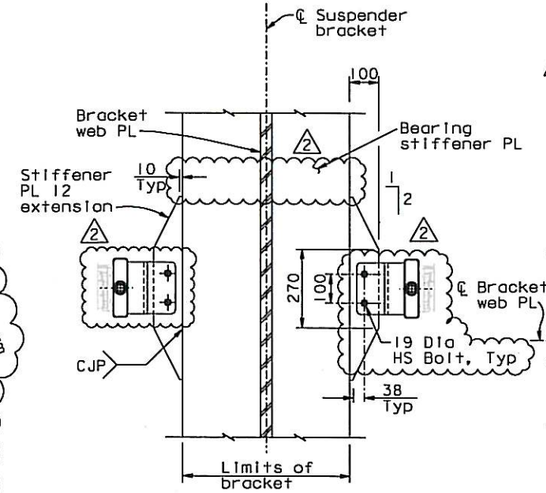

SECTION A-A
1:10

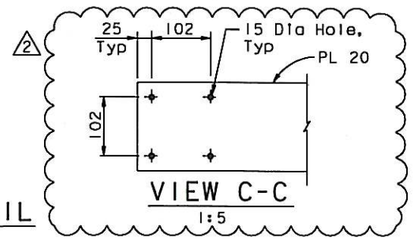

VIEW C-C
1:5

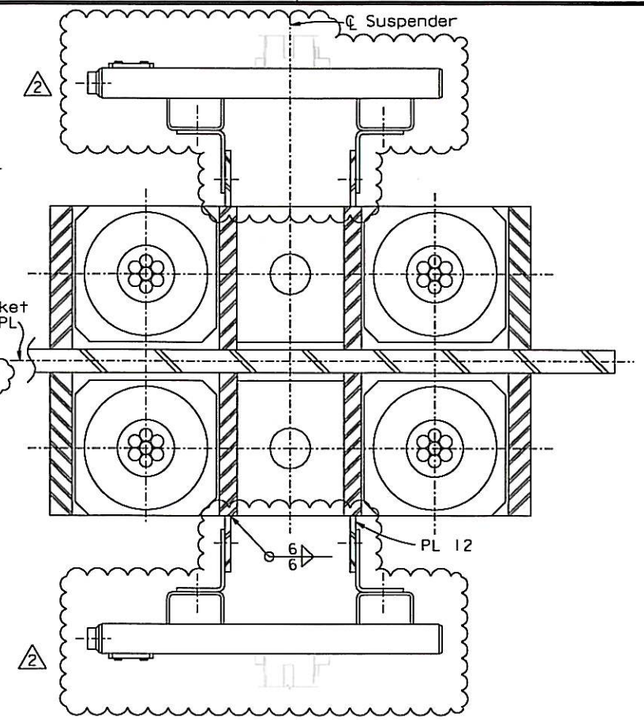

SECTION B-B
1:5

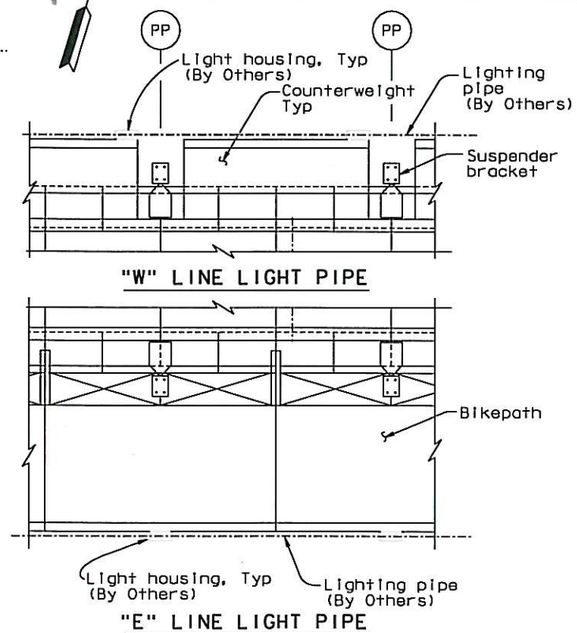

FUTURE LIGHT PIPE PLAN
1:5

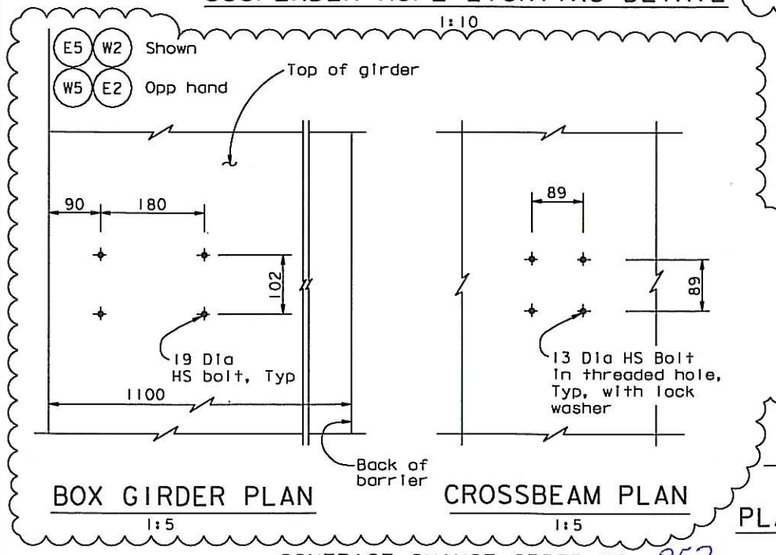

BOX GIRDER PLAN
1:5

CROSSBEAM PLAN
1:5

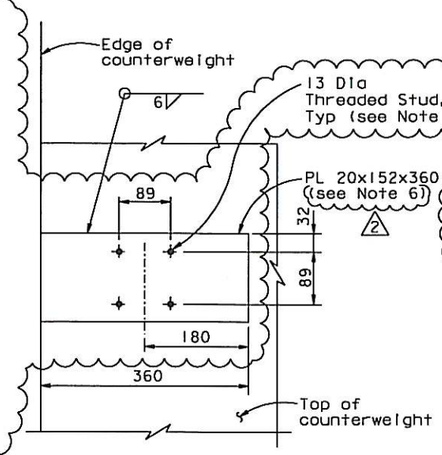

PLAN FOR COUNTERWEIGHT
1:5

DECK MOUNTING BRACKETS (See Note 3)

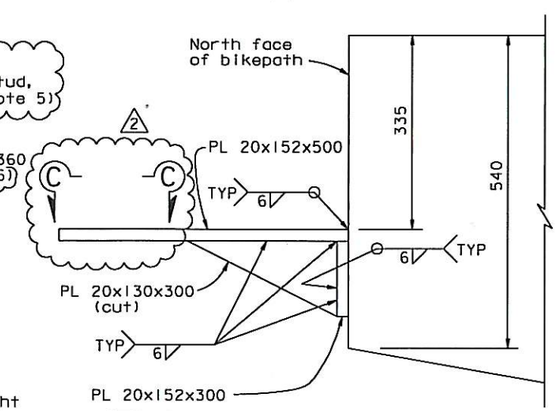

ELEVATION FOR BIKEPATH
1:5

NOTES:

1. For bracket details not shown, see "Suspender Bracket Details" sheets.
2. For details of LED light assemblies and support brackets, see "Road Plans".
3. Deck mounting bracket is to be used to support lamps placed on crossbeam, box girder, or bikepath faces.
4. For future light pipe details, see "Lighting Details No.2" sheet.
5. Stud material shall be ASTM A108 Grade 1018, with mechanical properties conforming to that of Type B studs in AWS D1.1 Table 7.1.
6. A307 bolts, installed snug tight with a lock nut, may be used in lieu of A325 bolts, subject to review and approval of the Engineer. Lock nut shall be Tri-Loc, manufactured by Lok-Mor, Inc or equivalent. All bolt assemblies shall be galvanized.
7. At PP93 on the "W" Line OBG, a PL 20x152x200 sole plate shall be installed, welded all around with a 6 mm fillet weld and centered on the stud pattern, similar to locations with PL 20x152x360.

CONTRACT CHANGE ORDER NO. 252
SHEET 44 OF 44

REQUESTS FOR INFORMATION NOT ADDRESSED IN THIS CCO REMAIN IN FORCE

REGISTERED PROFESSIONAL ENGINEER Marwan N. Nader No. C 054426 Exp. 12/31/13 CIVIL STATE OF CALIFORNIA

FOR REVISIONS ONLY

ALL DIMENSIONS ARE IN MILLIMETERS UNLESS OTHERWISE SHOWN

R. Vallizadeh/V. Toan/Y.L./W.L./F.C.
DESIGN OVERSIGHT
Roya Vallizadeh / Vong Toan / Y. Liu
SIGN OFF DATE 11/20/12

MARK	DATE	DESCRIPTIONS	BY	CH'D	CCO#
2	11/20/12	ROADWAY LEVEL LED FIXTURE DETAILS	DT	MN	252
1	08/25/08	LIGHTING REVISIONS	GB	AS	43

REVISIONS

DESIGN	BY G. Baker	CHECKED T. Ho
DETAILS	BY S. Como	CHECKED T. Ho
QUANTITIES	BY C. Mauch	CHECKED N. Vo

PREPARED FOR THE STATE OF CALIFORNIA DEPARTMENT OF TRANSPORTATION

R. Manzanarez
PROJECT ENGINEER

BRIDGE NO. 34-0006L/R
KILOMETER POST 13.2/13.9

SAN FRANCISCO OAKLAND BAY BRIDGE
EAST SPAN SEISMIC SAFETY PROJECT
SELF-ANCHORED SUSPENSION BRIDGE
(SUPERSTRUCTURE & TOWER)

LIGHTING DETAILS NO. 1

Rev. Date: 5-15-98

ORIGINAL SCALE IN MILLIMETERS FOR REDUCED PLANS 0 10 20 30 40 50 60 70 80 90 100

CU 04
EA 0120F1

DISREGARD PRINTS BEARING EARLIER REVISION DATES

REVISION DATES (PRELIMINARY STAGE ONLY) 05/27/99 05/27/01 01/08/02 07/09/02 12/15/02

SHEET 489R2 OF

FILE => I:\bb\04-012001\sos\contract plans and cco\cco\cco#252\2-update 11-20-12\dgn\aklht06.dgn

USERNAME => DWinrow DATE PLOTTED => 20 NOV 2012 TIME PLOTTED => 10:08:56

100 % PS&E