DIST.	COUNTY	ROUTE	KILOMETER POST TOTAL PROJECT	SHEET NO.	TOTAL SHEETS
04	SF	80	13.2/13.9	813S3R4	1204

REGISTERED ENGINEER - CIVIL

8-15-08
PLANS APPROVAL DATE

REGISTERED PROFESSIONAL ENGINEER Tien Hung Ho No. C 43990 Exp. 06/30/13 CIVIL STATE OF CALIFORNIA

The State of California or its officers or agents shall not be responsible for the accuracy or completeness of electronic copies of this plan sheet.

T.Y. LIN / MOFFATT & NICHOL
825 BATTERY STREET
SAN FRANCISCO, CA 94111

Caltrans now has a web site! To get to the web site, go to: http://www.dot.ca.gov

Utility Support Stanchion Location
PP 22
PP 30
PP 38
PP 46
PP 54
PP 62
PP 70
PP 78
PP 82 (4)

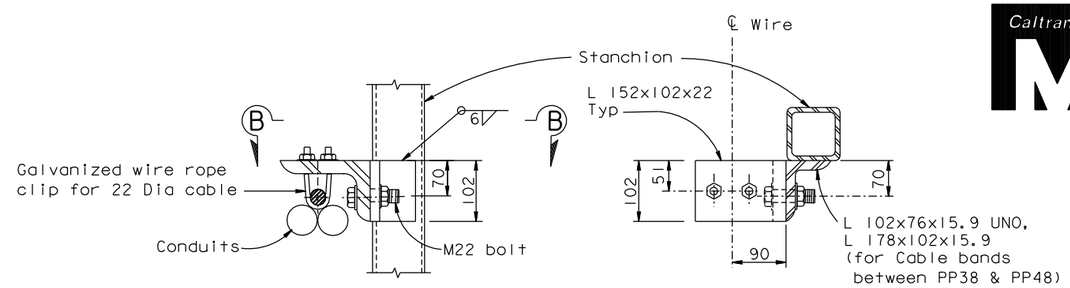

DETAIL A
1:5

SECTION B-B
1:5

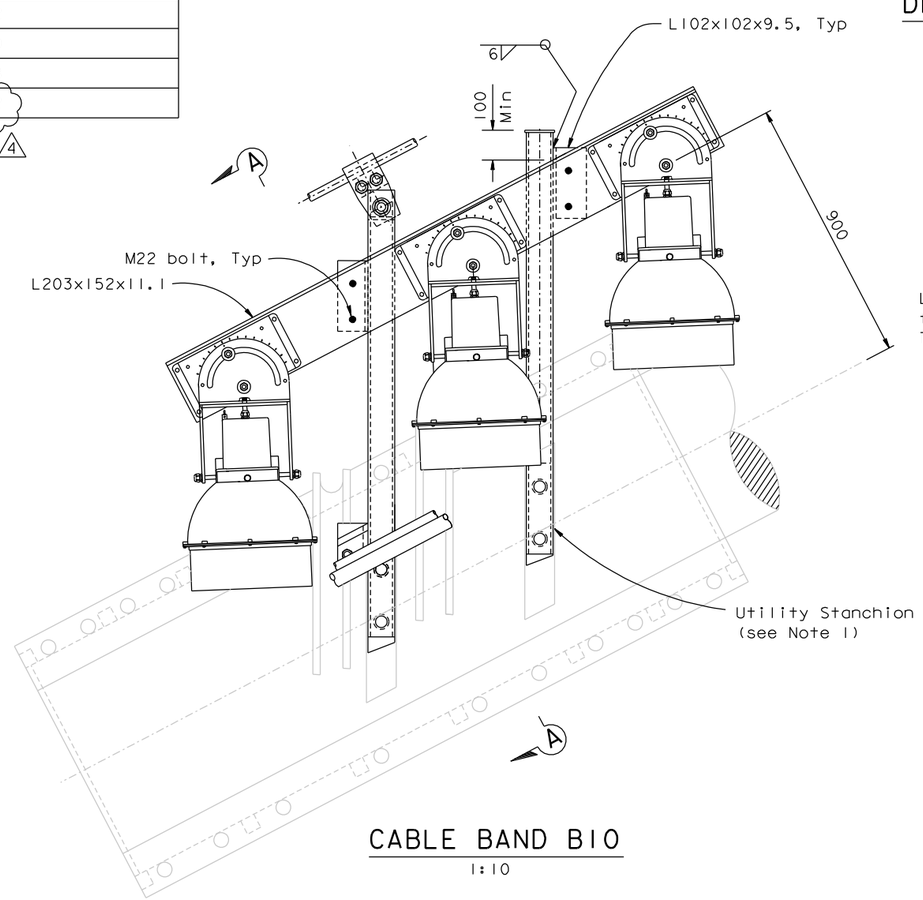

CABLE BAND B10
1:10

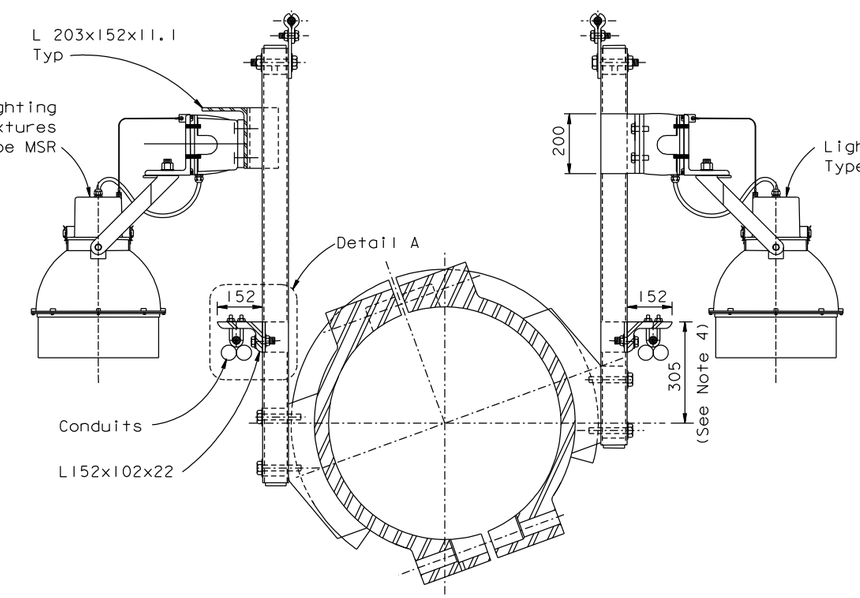

SECTION A-A
1:10

STANCHION DETAIL AT PANEL POINT 38

NOTES:

1. For Stanchion dimensions, see "Cable Handrope Details No.1" sheet.
2. Provide messenger cable support at every handrope stanchion, UNO. Detail A is typical for all handrope stanchion, UNO.
3. Pullbox mounting plates not shown for clarity. For details, see "Tower And Suspension Cable" sheets of the "Road Plans".
4. The dimension shown is perpendicular to the main cable.

(4) REVISION (4) SUPERSEDES REVISION (3)

CONTRACT CHANGE ORDER NO. _____
SHEET ____ OF ____

REQUESTS FOR INFORMATION NOT ADDRESSED IN THIS CCO REMAIN IN FORCE

MARK	DATE	DESCRIPTIONS	BY	CH'D	CCO#
4	05/22/12	ADDITIONAL CABLE LEDS	AB	TH	250
3	03/09/12	ADDITIONAL CABLE LEDS	AB	TH	167S2
2	06/22/11	CABLE ELECTRICAL	TH	AS	72
1	01/30/09	CABLE ELECTRICAL	TH	AS	72
0	10/31/08	CABLE ELECTRICAL	TH	AS	72

REVISIONS

R. Valizadeh/V. Toan/Y.L./W.L./F.C.
DESIGN OVERSIGHT
SIGN OFF DATE 05/22/12

	BY	CHECKED
DESIGN	T. Ho	A. Sanjines
DETAILS	T. Ho	A. Sanjines
QUANTITIES	T. Ho	A. Sanjines

PREPARED FOR THE STATE OF CALIFORNIA DEPARTMENT OF TRANSPORTATION

R. Manzanarez
PROJECT ENGINEER

ALL DIMENSIONS ARE IN MILLIMETERS UNLESS OTHERWISE SHOWN

BRIDGE NO. 34-0006L/R
KILOMETER POST 13.2/13.9

SAN FRANCISCO OAKLAND BAY BRIDGE
EAST SPAN SEISMIC SAFETY PROJECT
SELF-ANCHORED SUSPENSION BRIDGE
(SUPERSTRUCTURE & TOWER)

CABLE HANDROPE DETAILS NO. 2C

Rev. Date: 5-18-98

ORIGINAL SCALE IN MILLIMETERS FOR REDUCED PLANS 0 10 20 30 40 50 60 70 80 90 100

CU 04
EA 0120F1

DISREGARD PRINTS BEARING EARLIER REVISION DATES

REVISION DATES (PRELIMINARY STAGE ONLY) 08/15/08

SHEET 396S3R4 OF

FILE => I:\bb\04-012001\sas\contract plans and cco\cco\cco#250\1-original 05-22-12\dgn\agshr08c.dgn

USERNAME => DWinrow DATE PLOTTED => 22 MAY 2012 TIME PLOTTED => 10:58:18

100 % PS&E