DIST.	COUNTY	ROUTE	KILOMETER POST TOTAL PROJECT	SHEET NO.	TOTAL SHEETS
04	SF	80	13.2/13.9	760S2	1204

REGISTERED ENGINEER - CIVIL

06-29-12
PLANS APPROVAL DATE

REGISTERED PROFESSIONAL ENGINEER Marwan N. Nader No. C 054426 Exp. 12/31/13 CIVIL STATE OF CALIFORNIA

The State of California or its officers or agents shall not be responsible for the accuracy or completeness of electronic copies of this plan sheet.

T.Y. LIN / MOFFATT & NICHOL
825 BATTERY STREET
SAN FRANCISCO, CA 94111

Caltrans now has a web site! To get to the web site, go to: http://www.dot.ca.gov

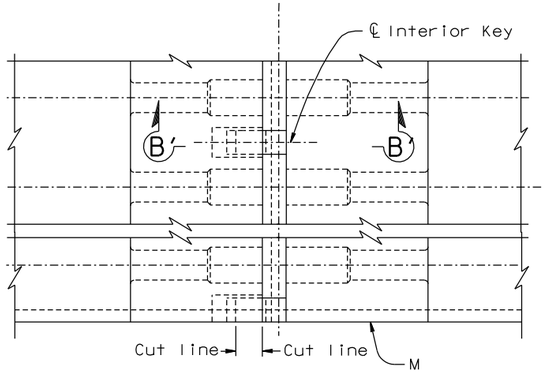

PLAN VIEW
1:5

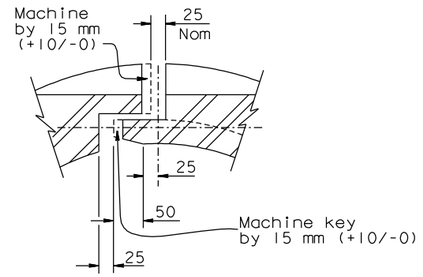

JOINT AT KEY

SECTION B'-B' (See Note 2)
1:5

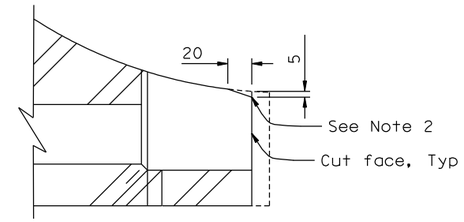

DETAIL A (See Note 1)
1:2.5

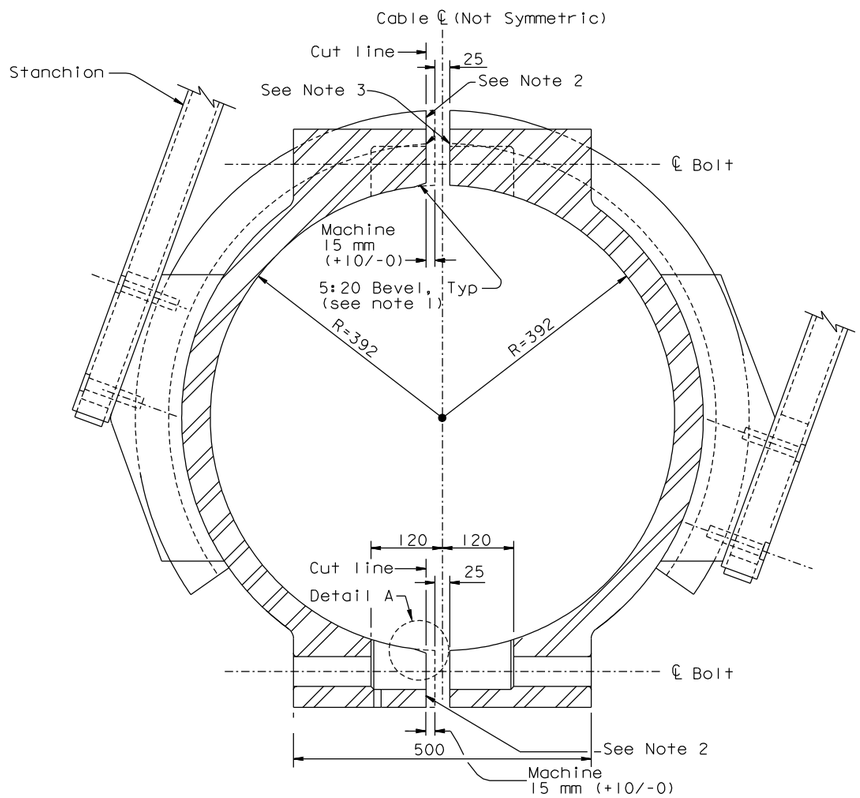

SECTION
1:5

NOTES:

1. Bevel inside corner of cut gap face by 5:20 top and bottom.
2. Dress all cut edges to 2 mm minimum radius.
3. Dress edge of suspender groove to 5 mm minimum radius.
4. For information not shown, see "Cable Band Details No.3" sheet.

ALTERNATE CABLE BAND DETAIL (FIELD ADJUSTMENTS)

(COUNTERMEASURES FOR REDUCED CABLE BAND GAPS)

CONTRACT CHANGE ORDER NO. ____
SHEET ____ OF ____

REQUESTS FOR INFORMATION NOT ADDRESSED IN THIS CCO REMAIN IN FORCE

ALL DIMENSIONS ARE IN MILLIMETERS UNLESS OTHERWISE SHOWN

R. Valizadeh/V. Toan/Y.L./W.L./F.C.
DESIGN OVERSIGHT
Roya Valizadeh / Vong Toan / Y. Liu
SIGN OFF DATE 06/29/12

MARK	DATE	DESCRIPTIONS	BY	CH'D	CCO#
0	06/29/12	CABLE BAND MACHINING	GB	MN	247

REVISIONS

DESIGN	BY G. Baker	CHECKED M. Nader	
DETAILS	BY J. Duxbury	CHECKED M. Nader	
QUANTITIES	BY J. Duxbury	CHECKED M. Nader	

PREPARED FOR THE STATE OF CALIFORNIA DEPARTMENT OF TRANSPORTATION

R. Manzanarez
PROJECT ENGINEER

BRIDGE NO. 34-0006L/R
KILOMETER POST 13.2/13.9

SAN FRANCISCO OAKLAND BAY BRIDGE
EAST SPAN SEISMIC SAFETY PROJECT
SELF-ANCHORED SUSPENSION BRIDGE
(SUPERSTRUCTURE & TOWER)

CABLE BAND DETAILS NO. 3B

Rev. Date: 5-18-98

ORIGINAL SCALE IN MILLIMETERS FOR REDUCED PLANS 0 10 20 30 40 50 60 70 80 90 100

CU 04
EA 0120F1

DISREGARD PRINTS BEARING EARLIER REVISION DATES 06/29/12

REVISION DATES (PRELIMINARY STAGE ONLY)

SHEET 343S2 OF

FILE => L:\BB\04-012001\SAS\Contract Plans and CCO\CCO\CCO#247\1-Original 06-29-12\DGN\agcbd03b.dgn

USERNAME => DWinrow DATE PLOTTED => 29 JUN 2012 TIME PLOTTED => 10:24:49

100 % PS&E