DIST.	COUNTY	ROUTE	KILOMETER POST TOTAL PROJECT	SHEET NO.	TOTAL SHEETS
04	SF	80/SAS	13.2/13.9	1166534R1	1204
		80/YBITS	12.7/13.2	K697BR1	806

Caltrans Metric

REGISTERED ENGINEER - CIVIL

04-19-12
PLANS APPROVAL DATE

REGISTERED PROFESSIONAL ENGINEER A.L. ELY No. 18880 Exp. 6-30-13 CIVIL STATE OF CALIFORNIA

The State of California or its officers or agents shall not be responsible for the accuracy or completeness of electronic copies of this plan sheet.

T.Y. LIN / MOFFATT & NICHOL
TWO HARRISON STREET
SAN FRANCISCO, CA 94105

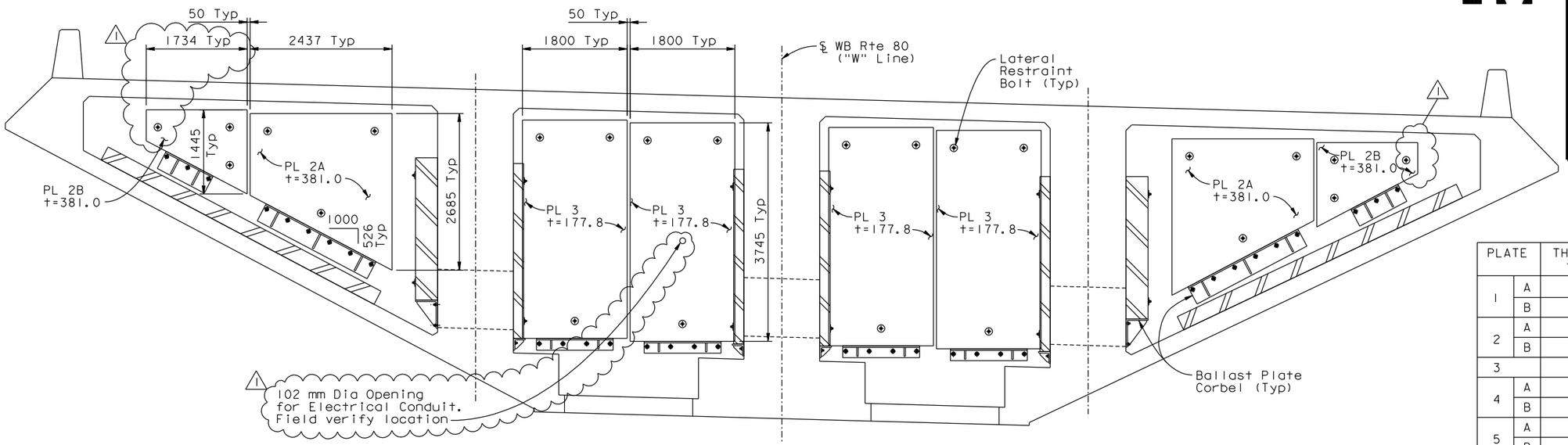

REFLECTED ELEVATION WB HINGE K ANCHORAGE DIAPHRAGM

1:40

PLATE		THICKNESS t (mm)	WT (Kg)	LOCATIONS	TOTAL WT (Kg)
1	A	381.0	12 520	2	25 040
	B	381.0	3 130	2	6 260
2	A	381.0	14 880	2	29 760
	B	381.0	5 490	2	10 980
3		177.8	9 390	4	37 560
4	A	381.0	14 650	2	29 300
	B	381.0	14 560	2	29 120
5	A	177.8	7 350	4	29 400
	B	177.8	7 030	4	28 120
6	A	254.0	25 540	2	51 080
	B	254.0	21 230	2	42 460
					319 080

Note: Thickness (t) shown may be made up of various plate thickness to arrive at the total thickness shown.

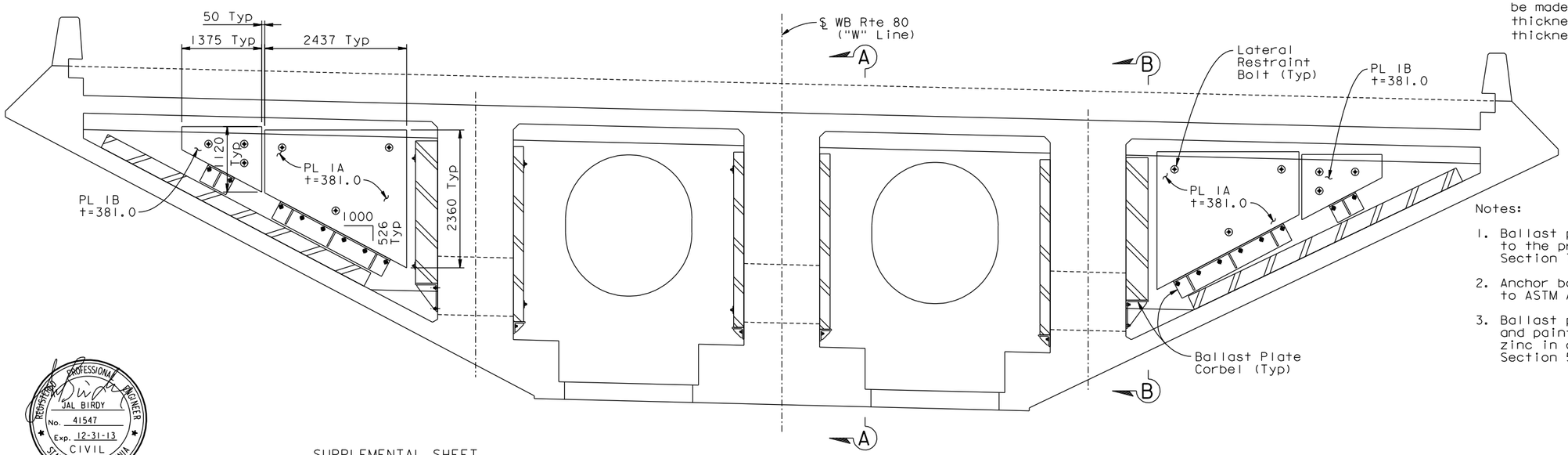

Notes:

1. Ballast plate and corbel steel shall conform to the provisions for miscellaneous metal in Section 75 of the standard specifications.
2. Anchor bolts shall be galv bolts conforming to ASTM A-307.
3. Ballast plates and corbels shall be cleaned and painted with a single coat of inorganic zinc in conformance with the provisions in Section 59 of the standard specifications.

REGISTERED PROFESSIONAL ENGINEER JAL BIRDY No. 41547 Exp. 12-31-13 CIVIL STATE OF CALIFORNIA

SUPPLEMENTAL SHEET
CONTRACT CHANGE ORDER NO. _____
SHEET ____ OF ____

FOR REVISION 1 ONLY

REQUESTS FOR INFORMATION NOT ADDRESSED IN THIS CCO REMAIN IN FORCE

ELEVATION WB HINGE K BEARING DIAPHRAGM

1:40

ALL DIMENSIONS ARE IN MILLIMETERS UNLESS OTHERWISE SHOWN

WB CLOSURE BALLAST PLATES

SAN FRANCISCO OAKLAND BAY BRIDGE
EAST SPAN SEISMIC SAFETY PROJECT

YBI TRANSITION STRUCTURES - HINGE K

HINGE K CLOSURE DETAILS NO. 16

MARK	DATE	DESCRIPTIONS	BY	CH'D	CCO#
1	09/14/12	HINGE K STEEL BALLAST	TL	JB	245S1
0	04/19/12	YBI CLOSURE POUR	TL	JB	245

REVISIONS

DESIGN OVERSIGHT
HASAN EL-NATUR HASAN EL-NATUR
SIGN OFF DATE

	BY	CHECKED
DESIGN	Lee	Birdy
DETAILS	Samson	Lee
QUANTITIES	Lee	Birdy

PREPARED FOR THE STATE OF CALIFORNIA DEPARTMENT OF TRANSPORTATION

Jal Birdy
PROJECT ENGINEER

BRIDGE NO. 34-0006 L/R
KILOMETER POST 12.8

CU 04
EA 0120F1

DISREGARD PRINTS BEARING EARLIER REVISION DATES

REVISION DATES (PRELIMINARY STAGE ONLY)

SHEET K132BR1 OF 209

Rev. Date: 5-18-98

ORIGINAL SCALE IN MILLIMETERS FOR REDUCED PLANS 0 10 20 30 40 50 60 70 80 90 100

FILE => L:\BB\04-012001\SAS\Contract Plans and CCO\CCO\CCO#245S1\1-Original 09-14-12\DGN\ybits-v-hingecldt01.dgn

Sept 6, 2012

USERNAME => ariverg DATE PLOTTED => 14 SEP 2012 TIME PLOTTED => 08:44:59