DIST.	COUNTY	ROUTE	KILOMETER POST TOTAL PROJECT	SHEET NO.	TOTAL SHEETS
04	SF	80	12.7/13.2	K697B	806

Caltrans Metric

REGISTERED ENGINEER - CIVIL
04/13/2012
PLANS APPROVAL DATE

REGISTERED PROFESSIONAL ENGINEER A.L. ELY No. 18880 Exp. 6-30-13 CIVIL STATE OF CALIFORNIA

The State of California or its officers or agents shall not be responsible for the accuracy or completeness of electronic copies of this plan sheet.

T.Y. LIN / MOFFATT & NICHOL
TWO HARRISON STREET
SAN FRANCISCO, CA 94105

Sheet 1166s34 of 1204

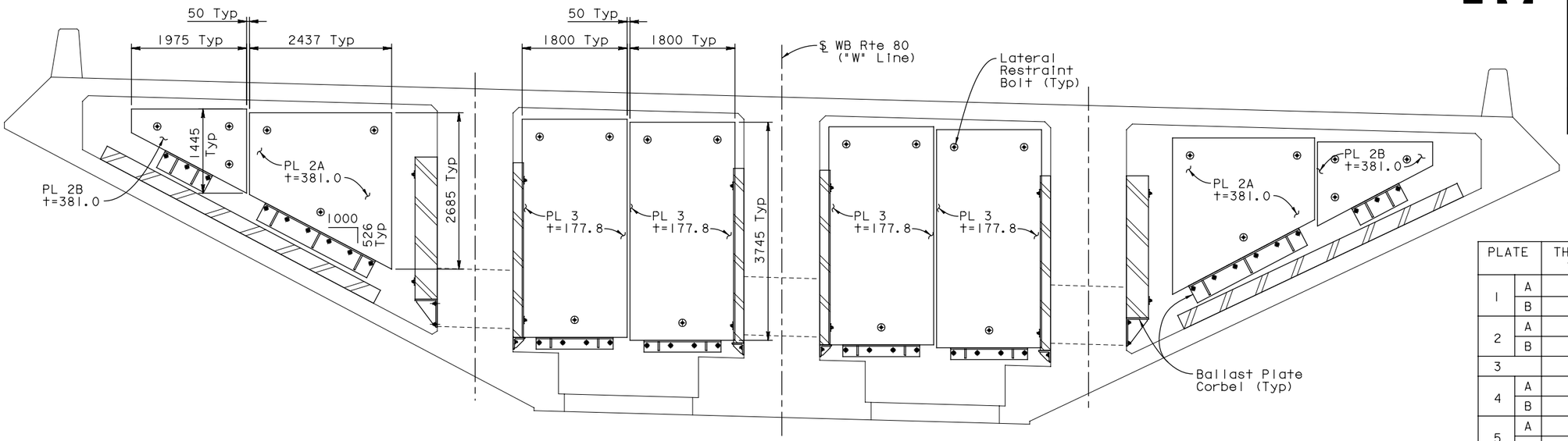

REFLECTED ELEVATION WB HINGE K ANCHORAGE DIAPHRAGM

1:40

PLATE		THICKNESS t (mm)	WT (Kg)	LOCATIONS	TOTAL WT (Kg)
1	A	381.0	12 520	2	25 040
	B	381.0	3 130	2	6 260
2	A	381.0	14 880	2	29 760
	B	381.0	5 490	2	10 980
3		177.8	9 390	4	37 560
4	A	381.0	14 650	2	29 300
	B	381.0	14 560	2	29 120
5	A	177.8	7 350	4	29 400
	B	177.8	7 030	4	28 120
6	A	254.0	25 540	2	51 080
	B	254.0	21 230	2	42 460
					319 080

Note: Thickness (t) shown may be made up of various plate thickness to arrive at the total thickness shown.

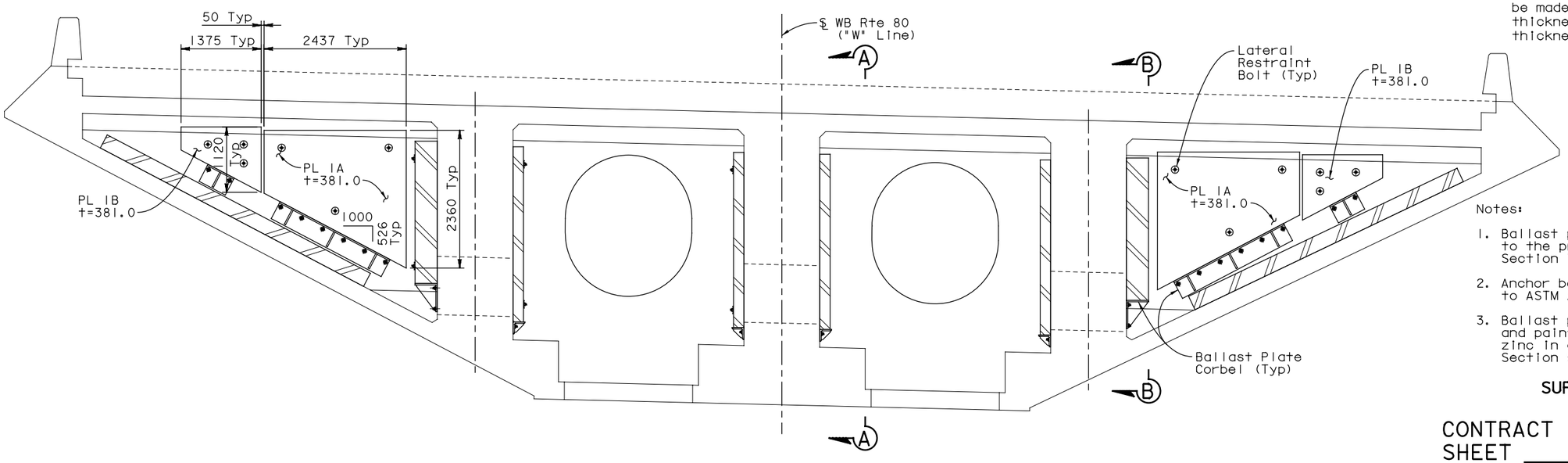

ELEVATION WB HINGE K BEARING DIAPHRAGM

1:40

Notes:

1. Ballast plate and corbel steel shall conform to the provisions for miscellaneous metal in Section 75 of the standard specifications.
2. Anchor bolts shall be galv bolts conforming to ASTM A-307.
3. Ballast plates and corbels shall be cleaned and painted with a single coat of inorganic zinc in conformance with the provisions in Section 59 of the standard specifications.

SUPPLEMENTAL SHEET

CONTRACT CHANGE ORDER NO. _____
SHEET ____ OF ____

WB CLOSURE BALLAST PLATES

ALL DIMENSIONS ARE IN MILLIMETERS UNLESS OTHERWISE SHOWN

SAN FRANCISCO OAKLAND BAY BRIDGE
EAST SPAN SEISMIC SAFETY PROJECT

YBI TRANSITION STRUCTURES - HINGE K

HINGE K CLOSURE DETAILS NO. 16

DESIGN OVERSIGHT		DESIGN	BY Lee	CHECKED Birdy
HASAN EL-NATUR		DETAILS	BY Samson	CHECKED Lee
SIGN OFF DATE		QUANTITIES	BY Lee	CHECKED Birdy

PREPARED FOR THE STATE OF CALIFORNIA DEPARTMENT OF TRANSPORTATION

Jal Birdy
PROJECT ENGINEER

BRIDGE NO. 34-0006 L/R
KILOMETER POST 12.8

CU 04
EA 0120F1

Rev. Date: 5-18-98

ORIGINAL SCALE IN MILLIMETERS FOR REDUCED PLANS 0 10 20 30 40 50 60 70 80 90 100

DISREGARD PRINTS BEARING EARLIER REVISION DATES

REVISION DATES (PRELIMINARY STAGE ONLY)

SHEET K132B OF 209

FILE => P:\4141-06\CADD\TS\Checked Plans\YBITS #1-100% No. 2_03-03-08 (Final Renamed)\011212 Hinge K SAS TXX CCO\MN sheets\Pending\Hinge K Closure Details 16.dgn

April 19, 2012

USERNAME => fsamson DATE PLOTTED => 4/19/2012 TIME PLOTTED => 9:29:34 AM

DIST.	COUNTY	ROUTE	KILOMETER POST TOTAL PROJECT	SHEET NO.	TOTAL SHEETS
04	SF	80	12.7/13.2	K697C	806

Caltrans Metric

REGISTERED ENGINEER - CIVIL
04/13/12
PLANS APPROVAL DATE

REGISTERED PROFESSIONAL ENGINEER A.L. ELY No. 18880 Exp. 6-30-13 CIVIL STATE OF CALIFORNIA

The State of California or its officers or agents shall not be responsible for the accuracy or completeness of electronic copies of this plan sheet.

T.Y. LIN / MOFFATT & NICHOL
TWO HARRISON STREET
SAN FRANCISCO, CA 94105

Sheet 1166s35 of 1204

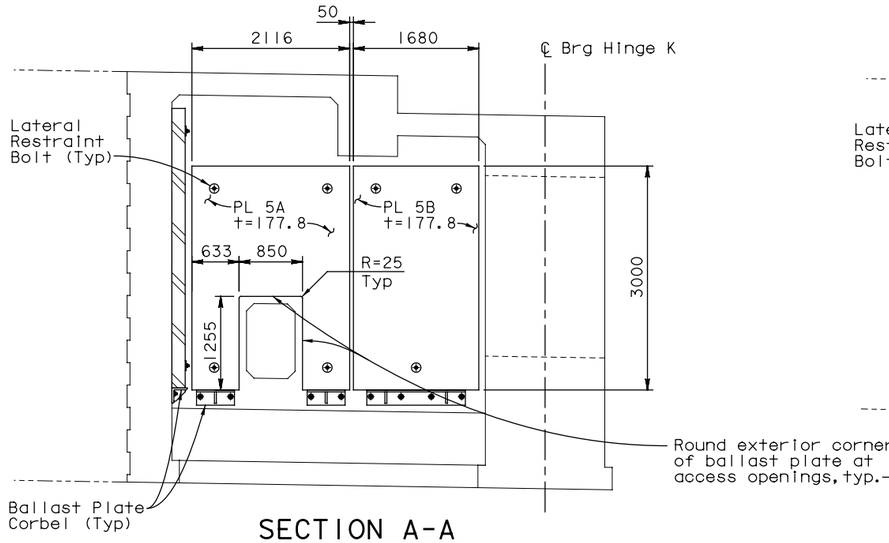

SECTION A-A
1:40

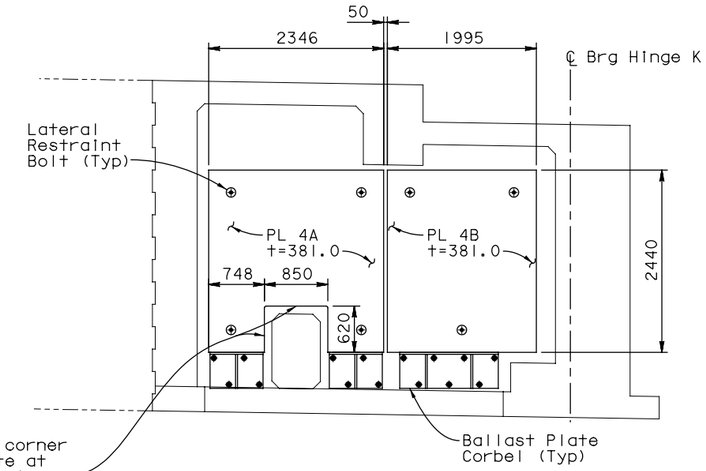

SECTION B-B
1:40

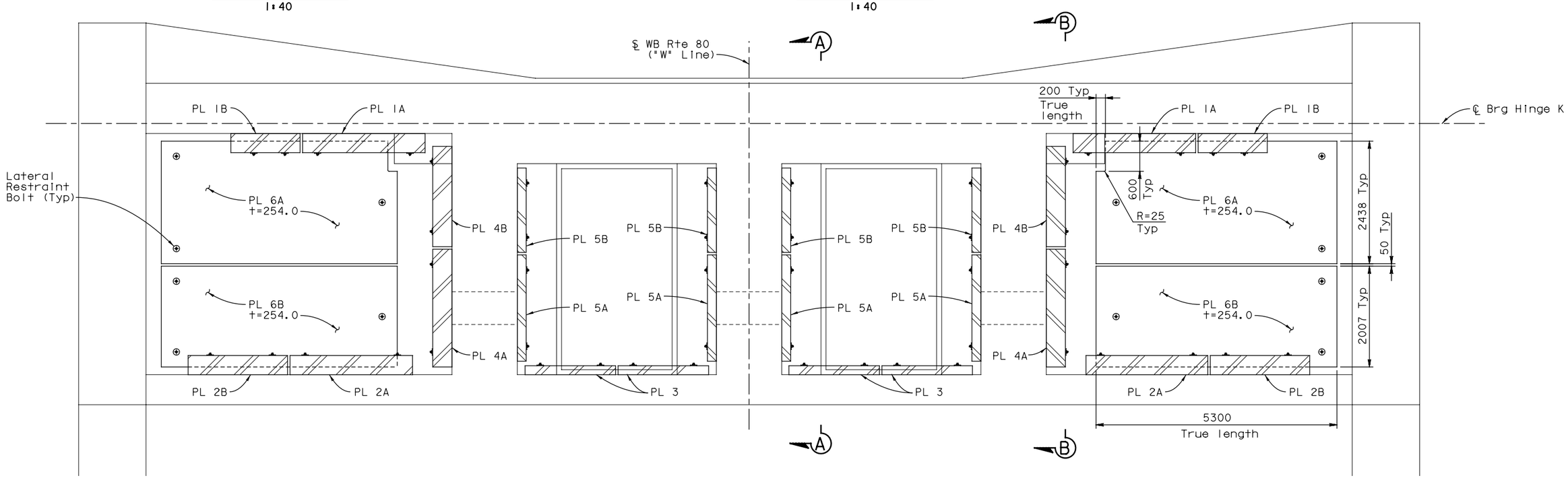

WB CLOSURE - PLAN BELOW DECK
1:40

SUPPLEMENTAL SHEET

CONTRACT CHANGE ORDER NO. _____
SHEET ____ OF ____

WB CLOSURE BALLAST PLATES

ALL DIMENSIONS ARE IN MILLIMETERS UNLESS OTHERWISE SHOWN

SAN FRANCISCO OAKLAND BAY BRIDGE
EAST SPAN SEISMIC SAFETY PROJECT

YBI TRANSITION STRUCTURES - HINGE K

HINGE K CLOSURE DETAILS NO. 17

DESIGN OVERSIGHT			
HASAN EL-NATUR			
SIGN OFF DATE			
Rev. Date: 5-18-98			

	BY	CHECKED
DESIGN	Lee	Birdy
DETAILS	Samson	Lee
QUANTITIES	Lee	Birdy

PREPARED FOR THE STATE OF CALIFORNIA DEPARTMENT OF TRANSPORTATION

Jal Birdy
PROJECT ENGINEER

BRIDGE NO. 34-0006 L/R
KILOMETER POST 12.8

CU 04
EA 0120F1

ORIGINAL SCALE IN MILLIMETERS FOR REDUCED PLANS 0 10 20 30 40 50 60 70 80 90 100

DISREGARD PRINTS BEARING EARLIER REVISION DATES

REVISION DATES (PRELIMINARY STAGE ONLY)

SHEET K132C OF 209

FILE => P:\4141-06\CADD\TS\Checked Plans\YBITS #1-100% No. 2_03-03-08 (Final Renamed)\011212 Hinge K SAS TXX CCO\MN sheets\Pending\Hinge K Closure Details 17.dgn

April 19, 2012

USERNAME => fsamson DATE PLOTTED => 4/19/2012 TIME PLOTTED => 9:29:24 AM

DIST.	COUNTY	ROUTE	KILOMETER POST TOTAL PROJECT	SHEET NO.	TOTAL SHEETS
04	SF	80	12.7/13.2	K697D	806

Caltrans Metric

REGISTERED ENGINEER - CIVIL
04/13/12
PLANS APPROVAL DATE

REGISTERED PROFESSIONAL ENGINEER A.L. ELY No. 18880 Exp. 6-30-13 CIVIL STATE OF CALIFORNIA

The State of California or its officers or agents shall not be responsible for the accuracy or completeness of electronic copies of this plan sheet.

T.Y. LIN / MOFFATT & NICHOL
TWO HARRISON STREET
SAN FRANCISCO, CA 94105

Sheet 1166s36 of 1204

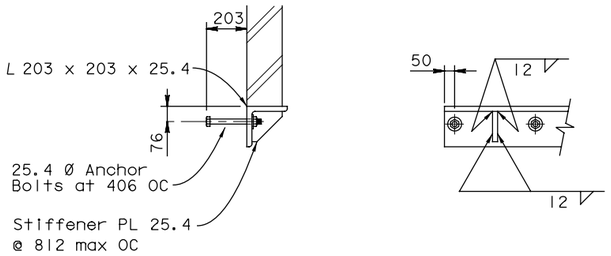

BALLAST PLATE CORBEL FOR PLS 3, 5A & 5B
1:15

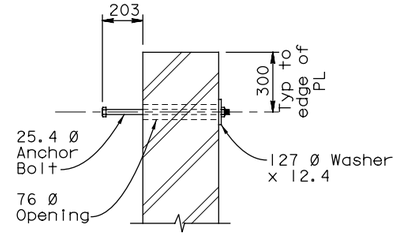

BALLAST PLATE
LATERAL RESTRAINT BOLT
1:15

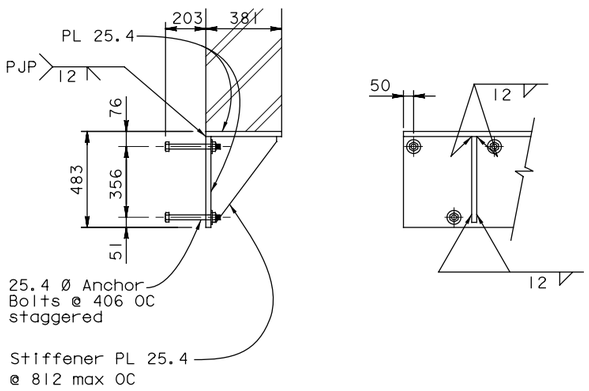

BALLAST PLATE CORBEL FOR PLS 4A & 4B
1:15

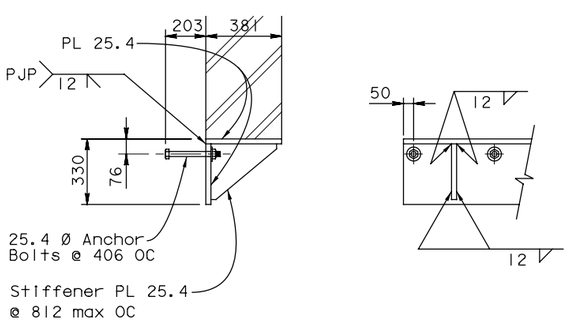

BALLAST PLATE CORBEL FOR PLS 1A, 1B, 2A & 2B
1:15

SUPPLEMENTAL SHEET

CONTRACT CHANGE ORDER NO. _____
SHEET ____ OF ____

WB CLOSURE BALLAST PLATES

ALL DIMENSIONS ARE IN MILLIMETERS UNLESS OTHERWISE SHOWN

SAN FRANCISCO OAKLAND BAY BRIDGE
EAST SPAN SEISMIC SAFETY PROJECT

YBI TRANSITION STRUCTURES - HINGE K

HINGE K CLOSURE DETAILS NO. 18

DESIGN OVERSIGHT				
HASAN EL-NATUR	DESIGN	BY Lee	CHECKED Birdy	
	DETAILS	BY Samson	CHECKED Lee	
SIGN OFF DATE	QUANTITIES	BY Lee	CHECKED Birdy	

PREPARED FOR THE STATE OF CALIFORNIA DEPARTMENT OF TRANSPORTATION

Jal Birdy
PROJECT ENGINEER

BRIDGE NO. 34-0006 L/R
KILOMETER POST 12.8

CU 04
EA 0120F1

Rev. Date: 5-18-98

ORIGINAL SCALE IN MILLIMETERS FOR REDUCED PLANS 0 10 20 30 40 50 60 70 80 90 100

DISREGARD PRINTS BEARING EARLIER REVISION DATES

REVISION DATES (PRELIMINARY STAGE ONLY)

SHEET K132D OF 209

FILE => P:\4141-06\CADD\TS\Checked Plans\YBITS #1-100% No. 2_03-03-08 (Final Renamed)\011212 Hinge K SAS TXX CCO\MN sheets\Pending\Hinge K Closure Details 18.dgn

April 19, 2012

USERNAME => fsamson DATE PLOTTED => 4/19/2012 TIME PLOTTED => 9:29:15 AM