DIST.	COUNTY	ROUTE	KILOMETER POST TOTAL PROJECT	SHEET NO.	TOTAL SHEETS
04	SF	80	12.7/13.2	K697D	806

Caltrans Metric

REGISTERED ENGINEER - CIVIL
04/13/12
PLANS APPROVAL DATE

REGISTERED PROFESSIONAL ENGINEER A.L. ELY No. 18880 Exp. 6-30-13 CIVIL STATE OF CALIFORNIA

The State of California or its officers or agents shall not be responsible for the accuracy or completeness of electronic copies of this plan sheet.

T.Y. LIN / MOFFATT & NICHOL
TWO HARRISON STREET
SAN FRANCISCO, CA 94105

Sheet 1166s36 of 1204

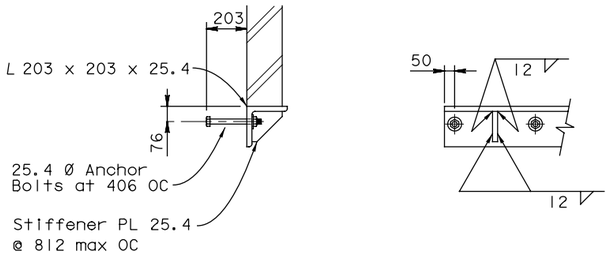

BALLAST PLATE CORBEL FOR PLS 3, 5A & 5B
1:15

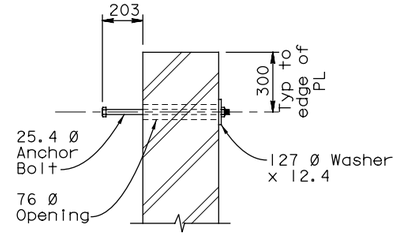

BALLAST PLATE
LATERAL RESTRAINT BOLT
1:15

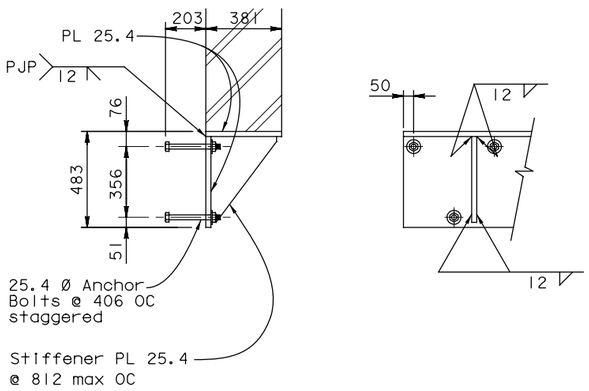

BALLAST PLATE CORBEL FOR PLS 4A & 4B
1:15

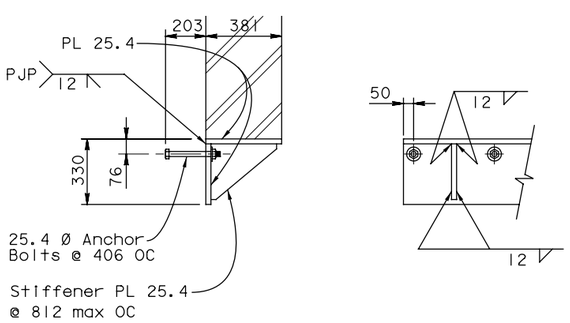

BALLAST PLATE CORBEL FOR PLS 1A, 1B, 2A & 2B
1:15

SUPPLEMENTAL SHEET

CONTRACT CHANGE ORDER NO. _____
SHEET ____ OF ____

WB CLOSURE BALLAST PLATES

ALL DIMENSIONS ARE IN MILLIMETERS UNLESS OTHERWISE SHOWN

SAN FRANCISCO OAKLAND BAY BRIDGE
EAST SPAN SEISMIC SAFETY PROJECT

YBI TRANSITION STRUCTURES - HINGE K

HINGE K CLOSURE DETAILS NO. 18

DESIGN OVERSIGHT				
HASAN EL-NATUR	DESIGN	BY Lee	CHECKED Birdy	
	DETAILS	BY Samson	CHECKED Lee	
SIGN OFF DATE	QUANTITIES	BY Lee	CHECKED Birdy	

PREPARED FOR THE STATE OF CALIFORNIA DEPARTMENT OF TRANSPORTATION

Jal Birdy
PROJECT ENGINEER

BRIDGE NO. 34-0006 L/R
KILOMETER POST 12.8

CU 04
EA 0120F1

Rev. Date: 5-18-98

ORIGINAL SCALE IN MILLIMETERS FOR REDUCED PLANS 0 10 20 30 40 50 60 70 80 90 100

DISREGARD PRINTS BEARING EARLIER REVISION DATES

REVISION DATES (PRELIMINARY STAGE ONLY)

SHEET K132D OF 209

FILE => P:\4141-06\CADD\TS\Checked Plans\YBITS #1-100% No. 2_03-03-08 (Final Renamed)\011212 Hinge K SAS TXX CCO\MN sheets\Pending\Hinge K Closure Details 18.dgn

April 19, 2012

USERNAME => fsamson DATE PLOTTED => 4/19/2012 TIME PLOTTED => 9:29:15 AM