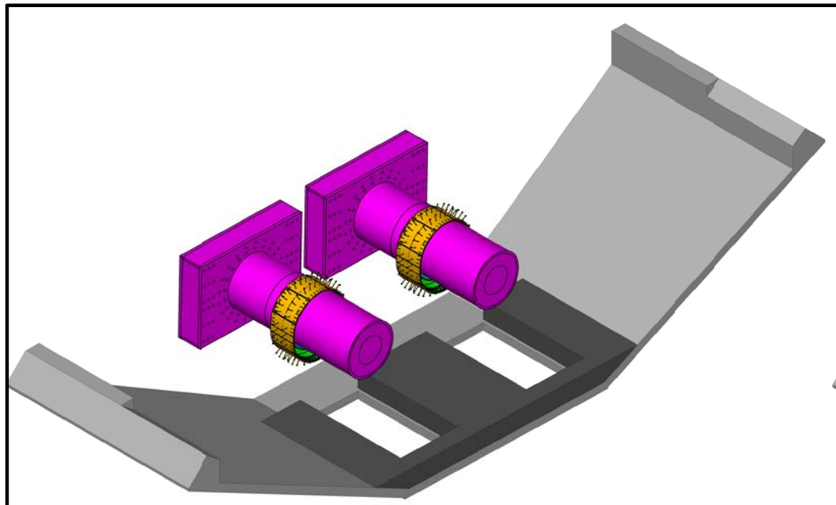

POUR 1 – BOTTOM SOFFIT AND LONGITUDINAL STEM BASE

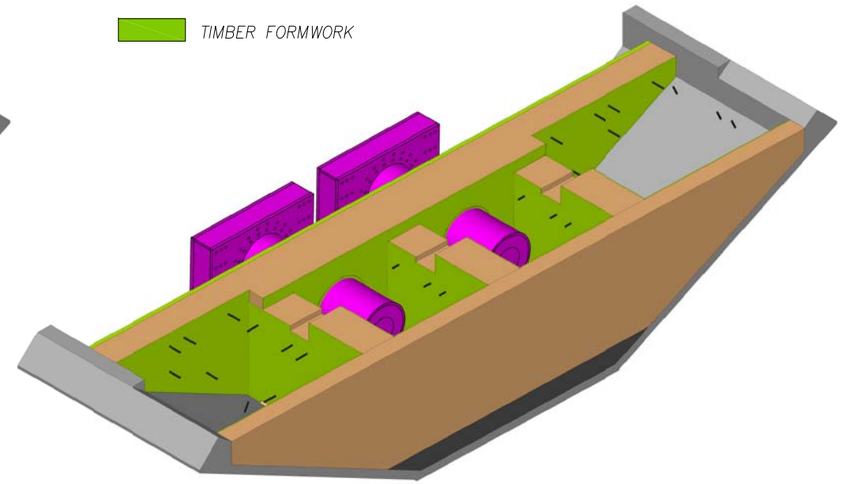

POUR 2 – LONG. AND TRANSVERSE STEM WALLS – WITH TIMBER FORMWORK

NOTES:

1. ABF FALSEWORK TO BE REMOVED PRIOR TO INSTALLING BALLAST PLATES. THIS ASSUMES THAT THE STEM WALL POUR IS CURED AND SUPPORTS THE STRUCTURE AND BALLAST COMPONENTS AT THIS STAGE.
2. ALL EXPOSED STEEL SHALL HAVE A PRIMER COAT APPLIED.
3. ALL STEEL BALLAST PLATES SHALL BE CONSIDERED MISC. STEEL AND FABRICATED PER AWS D1.1.
4. ACCESS CUT–OUTS IN BALLAST PLATES ARE INCLUDED IN WEIGHT TAKE–OFF.
5. ALL BALLAST PLATE FASTENER LOCATIONS EMBEDDED IN STEM WALLS SHALL BE KNOWN PRIOR TO BALLAST PLATE FABRICATON.
6. TOTAL BALLAST PLATE WEIGHTS AT LOCATIONS P13 AND P14 ARE LESS THAN MAX ALLOWABLE WEIGHT AT BOTTOM SOFFIT WINGS.
7. 152mm (6") CLEARANCE IS PROVIDED BETWEEN EDGES OF BALLAST PLATE AND PERMANENT STRUCTURE AT MOST LOCATIONS.
8. VERTICAL PLATE LOAD IS SUPPORTED BY THE CORBEL. DIA. OF FASTENER SHALL BE AS REQUIRED TO FASTEN PLATES TO PERMANENT STRUCTURE AND RESIST SEISMIC LOADS.

TABLE 1.0 – BALLAST PLATE WEIGHTS

MARK	QTY	A WT (KIP)	B WT (KIP)
P1	15	37	17
P2	15	36	17
P3	15	36	17
P4	7	21	21
P5	7	21	21
P6	15	37	17
P7	15	37	39
P8	7	19	15
P9	7	19	15
P10	7	19	15
P11	7	19	15
P12	15	37	39
P13	10	57	47
P14	10	57	47
TOTAL	152	452	342
TOTAL BALLAST PL WT			**794**

TABLE NOTE:
EACH 'P' LOCATION IS SPLIT INTO TWO PLATES A & B WITH A MAXIMUM WIDTH OF 2438mm (8'–0") FOR FABRICATION AVAILIBILITY. TOTAL NUMBER OF INDIVIDUAL PLATES IS TWICE THAT SHOWN IN THE TABLE.

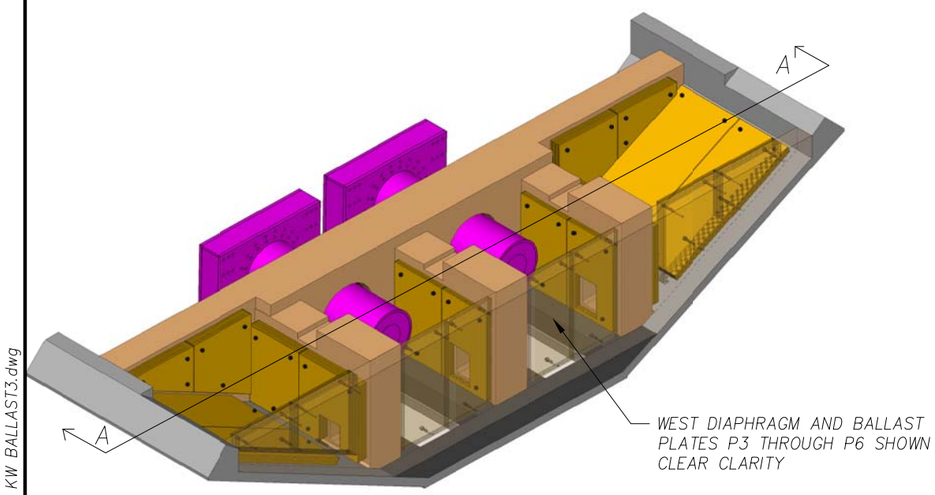

REMOVE ALL FORMWORK AND HANG STEEL PLATES AS BALLAST; 794 KIP AS SHOWN

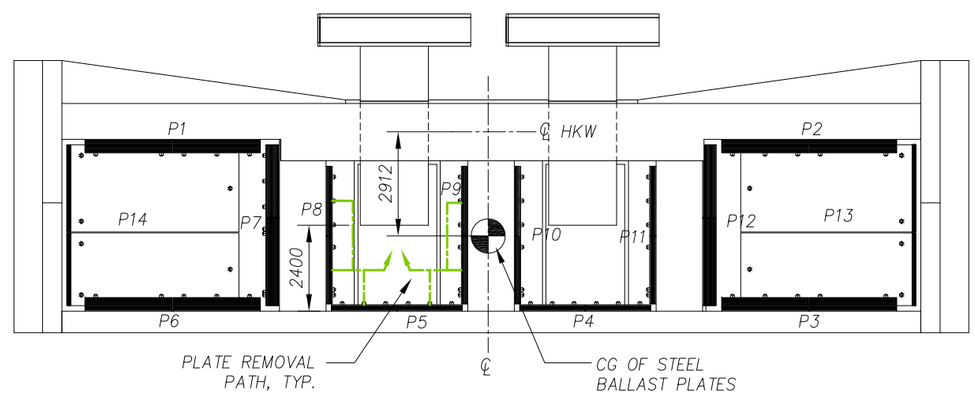

PLAN

PLATE LAYOUT (SEE TABLE 1.0 FOR WEIGHTS)

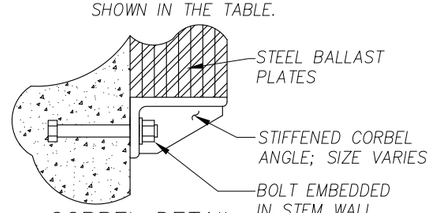

CORBEL DETAIL

(SEE NOTE 8)

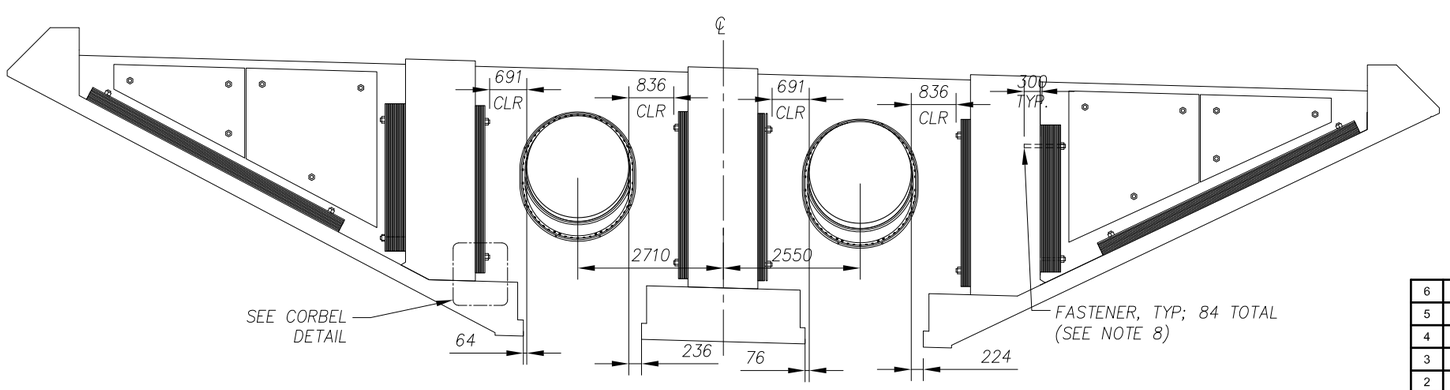

SECTION A–A

DRAFT – FOR INFORMATION ONLY

STATE OF CALIFORNIA
DEPARTMENT OF TRANSPORTATION
CONTRACT NO. 04-0120F4
BRIDGE NO. 34-0006L/R

DISTRICT	COUNTY	ROUTE	KILOMETER POST
04	SF	80	13.2 / 13.9

SAN FRANCISCO OAKLAND BAY BRIDGE
EAST SPAN SEISMIC SAFETY PROJECT
SELF ANCHORED SUSPENSION BRIDGE
(SUPERSTRUCTURE AND TOWER)

HINGE K CLOSURE POUR
HINGE KW STEEL BALLAST OPTION
ISOMETRICS & DETAILS

American Bridge / FLUOR
A JOINT VENTURE

Made By: D. MCNICHOL Date: 03/27/2012
Checked By: Date:
In Charge Of: M. MACDONALD

Job No.	Sheet No.
660110	SK-HKW01
Scale: NTS	Revision: B

REV	DATE	BY	DESCRIPTION
6			
5			
4			
3			
2			
1	3/27/2012	D.M.	DELETE STEEL FORMWORK, REVISE PLATES

Mar 28, 2012 – 11:55am C:\Users\dmcnichol\Desktop\Hinge KW BALLAST3.dwg