| DIST. | COUNTY | ROUTE | KILOMETER POST TOTAL PROJECT | SHEET NO. | TOTAL SHEETS |
|---|---|---|---|---|---|
| 04 | SF | 80/SAS | 13.2/13.9 | 1166S34 | 1204 |
| | | 80/YBITS | 12.7/13.2 | K697B | 806 |

Caltrans Metric

REGISTERED ENGINEER - CIVIL

04-19-12
PLANS APPROVAL DATE

REGISTERED PROFESSIONAL ENGINEER A.L. ELY No. 18880 Exp. 6-30-13 CIVIL STATE OF CALIFORNIA

The State of California or its officers or agents shall not be responsible for the accuracy or completeness of electronic copies of this plan sheet.

T.Y. LIN / MOFFATT & NICHOL
TWO HARRISON STREET
SAN FRANCISCO, CA 94105

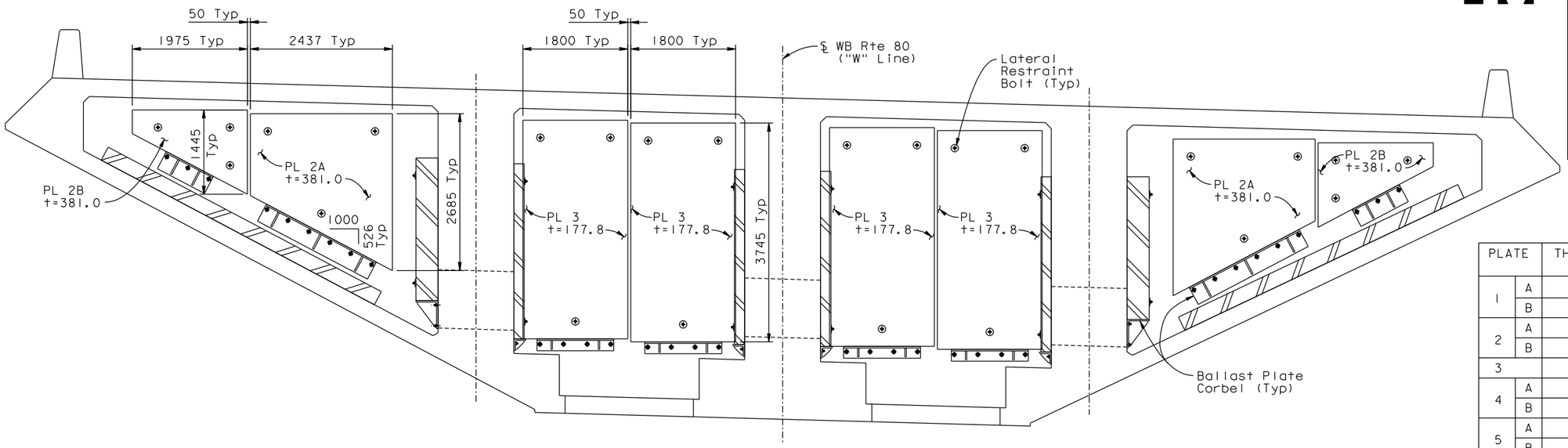


## REFLECTED ELEVATION WB HINGE K ANCHORAGE DIAPHRAGM

1:40

| PLATE | | THICKNESS t (mm) | WT (Kg) | LOCATIONS | TOTAL WT (Kg) |
|---|---|---|---|---|---|
| 1 | A | 381.0 | 12 520 | 2 | 25 040 |
| | B | 381.0 | 3 130 | 2 | 6 260 |
| 2 | A | 381.0 | 14 880 | 2 | 29 760 |
| | B | 381.0 | 5 490 | 2 | 10 980 |
| 3 | | 177.8 | 9 390 | 4 | 37 560 |
| 4 | A | 381.0 | 14 650 | 2 | 29 300 |
| | B | 381.0 | 14 560 | 2 | 29 120 |
| 5 | A | 177.8 | 7 350 | 4 | 29 400 |
| | B | 177.8 | 7 030 | 4 | 28 120 |
| 6 | A | 254.0 | 25 540 | 2 | 51 080 |
| | B | 254.0 | 21 230 | 2 | 42 460 |
| | | | | | 319 080 |

Note: Thickness (t) shown may be made up of various plate thickness to arrive at the total thickness shown.

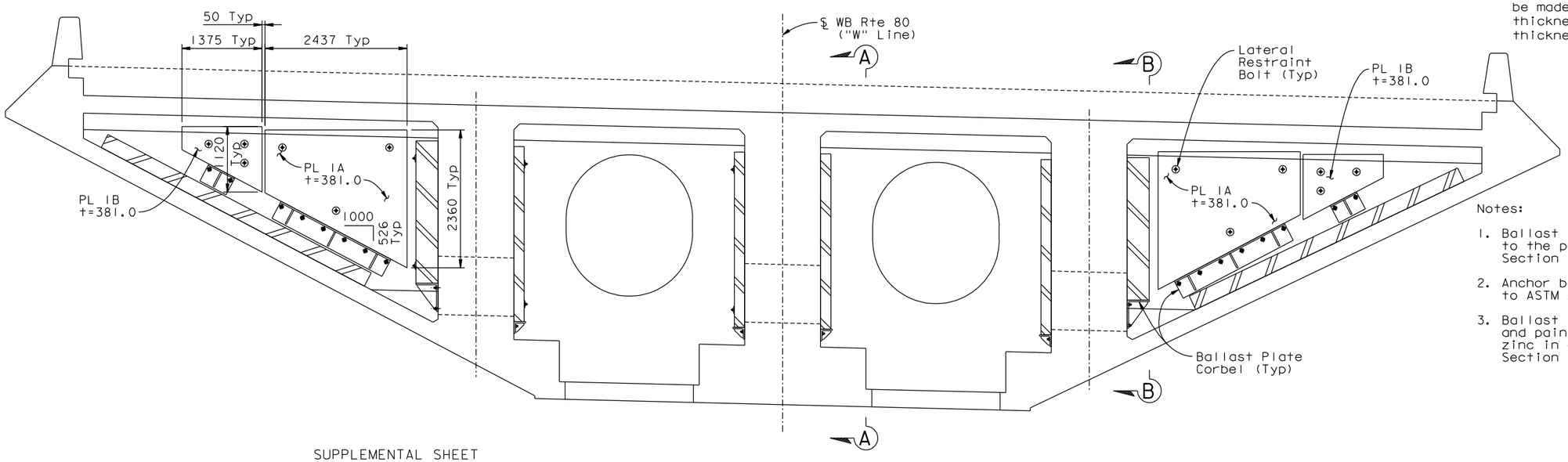


Notes:

1. Ballast plate and corbel steel shall conform to the provisions for miscellaneous metal in Section 75 of the standard specifications.
2. Anchor bolts shall be galv bolts conforming to ASTM A-307.
3. Ballast plates and corbels shall be cleaned and painted with a single coat of inorganic zinc in conformance with the provisions in Section 59 of the standard specifications.

SUPPLEMENTAL SHEET
CONTRACT CHANGE ORDER NO. 245
SHEET 2 OF 4

REQUESTS FOR INFORMATION NOT ADDRESSED IN THIS CCO REMAIN IN FORCE

## ELEVATION WB HINGE K BEARING DIAPHRAGM

1:40

ALL DIMENSIONS ARE IN MILLIMETERS UNLESS OTHERWISE SHOWN

## WB CLOSURE BALLAST PLATES

SAN FRANCISCO OAKLAND BAY BRIDGE
EAST SPAN SEISMIC SAFETY PROJECT

YBI TRANSITION STRUCTURES - HINGE K

HINGE K CLOSURE DETAILS NO. 16

| MARK | DATE | DESCRIPTIONS | BY | CH'D | CCO# |
|---|---|---|---|---|---|
| 0 | 04/19/12 | YBI CLOSURE POUR | TL | JB | 245 |

REVISIONS

DESIGN OVERSIGHT
HASAN EL-NATUR
SIGN OFF DATE

| | BY | CHECKED |
|---|---|---|
| DESIGN | Lee | Birdy |
| DETAILS | Samson | Lee |
| QUANTITIES | Lee | Birdy |

PREPARED FOR THE STATE OF CALIFORNIA DEPARTMENT OF TRANSPORTATION

Jal Birdy
PROJECT ENGINEER

BRIDGE NO. 34-0006 L/R
KILOMETER POST 12.8

CU 04
EA 0120F1

Rev. Date: 5-18-98

ORIGINAL SCALE IN MILLIMETERS FOR REDUCED PLANS 0 10 20 30 40 50 60 70 80 90 100

DISREGARD PRINTS BEARING EARLIER REVISION DATES

REVISION DATES (PRELIMINARY STAGE ONLY)

SHEET K132B OF 209

FILE => L:\BB\04-012001\SAS\Contract Plans and CCO\CCO\CCO#245\DGN\ybits-v-hingecld01.dgn

April 19, 2012

USERNAME => arivera DATE PLOTTED => 30 MAY 2012 TIME PLOTTED => 13:49:06