DIST.	COUNTY	ROUTE	KILOMETER POST TOTAL PROJECT	SHEET NO.	TOTAL SHEETS
04	SF	80	13.2/13.9	890S9	1204

Caltrans Metric

Daniel J. Turner
REGISTERED ENGINEER - CIVIL

06-08-12
PLANS APPROVAL DATE

REGISTERED PROFESSIONAL ENGINEER Daniel J. Turner No. C 65033 Exp. 06/30/13 CIVIL STATE OF CALIFORNIA

The State of California or its officers or agents shall not be responsible for the accuracy or completeness of electronic copies of this plan sheet.

T.Y. LIN / MOFFATT & NICHOL
825 BATTERY STREET
SAN FRANCISCO, CA 94111

Caltrans now has a web site! To get to the web site, go to: http://www.dot.ca.gov

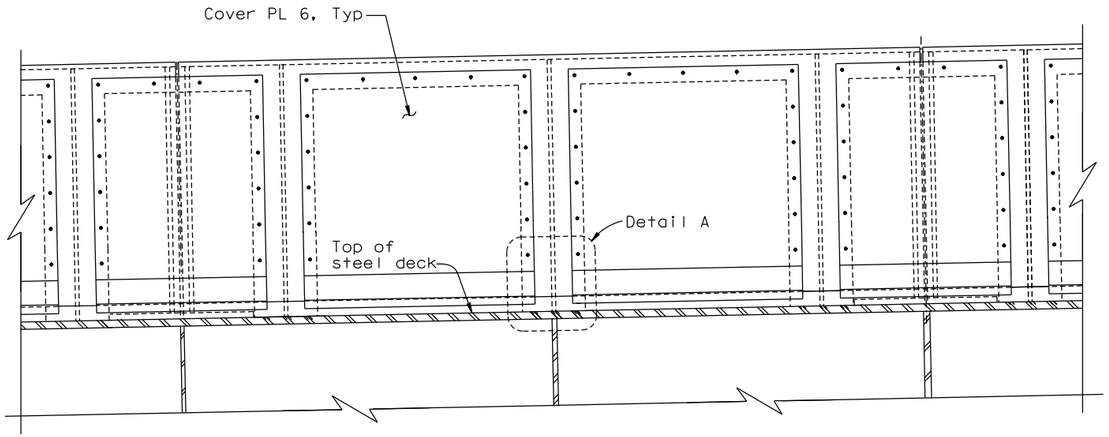

BARRIER AT W2, E5 LINE-ELEVATION (Looking South)
1:10

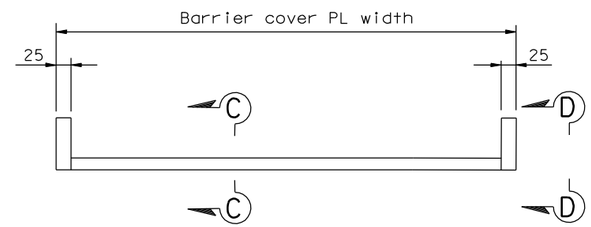

NEOPRENE PLUG DETAIL (See Note 3)
1:5

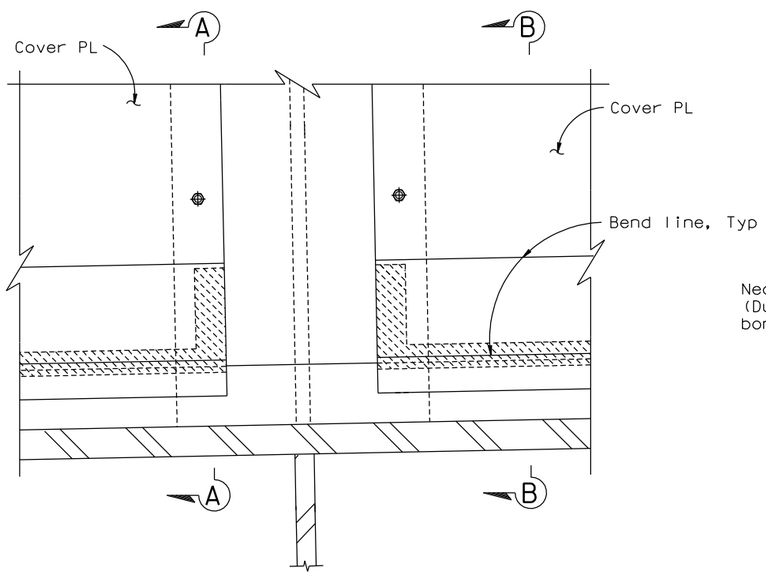

DETAIL A
1:2.5

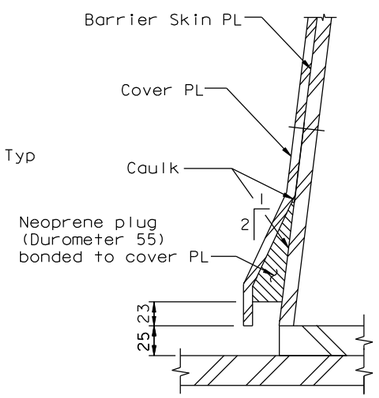

SECTION A-A (Diverter plate & backer rod not shown)
1:2.5

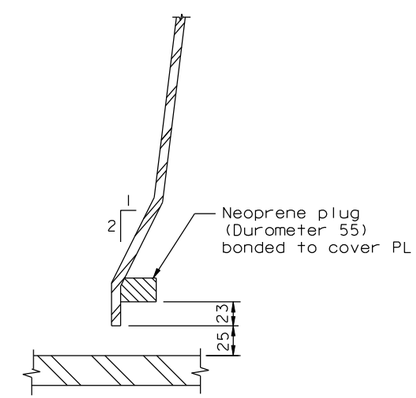

SECTION B-B (Diverter plate not shown)
1:2.5

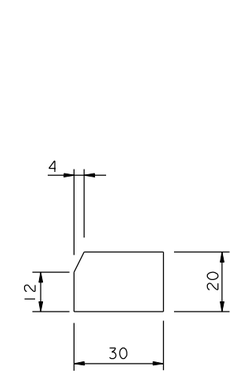

SECTION C-C
1:1

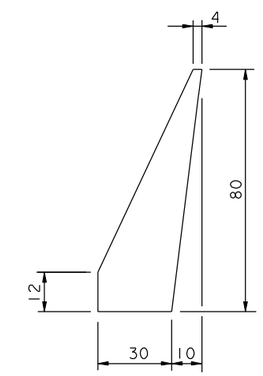

SECTION D-D
1:1

LEGEND:

Neoprene pad (Durometer 55) bonded to cover PL

NOTES:

1. Pipe supports, conduit penetration details and recepticle mountings not shown for clarity.
2. For barrier details not shown, see "Barrier Details No. 2B" sheet.
3. The neoprene plug may be fabricated in one piece.

ADDITIONAL SEALING DETAILS

CONTRACT CHANGE ORDER NO. _____
SHEET ____ OF ____

REQUESTS FOR INFORMATION NOT ADDRESSED IN THIS CCO REMAIN IN FORCE

ALL DIMENSIONS ARE IN MILLIMETERS UNLESS OTHERWISE SHOWN

R. Valizadeh/V. Toan/Y.L./W.L./F.C.
DESIGN OVERSIGHT
Reza Valizadeh / Vong Toan / Y. Liu
SIGN OFF DATE 06/08/12

MARK	DATE	DESCRIPTIONS	BY	CH'D	CCO#
0	06/08/12	OBG & CROSSBEAM SEALING	DT	HT	244

REVISIONS

DESIGN	BY D. Turner	CHECKED H. Tazir	
DETAILS	BY D. Turner	CHECKED H. Tazir	
QUANTITIES	BY D. Turner	CHECKED H. Tazir	

PREPARED FOR THE STATE OF CALIFORNIA DEPARTMENT OF TRANSPORTATION

R. Manzanarez
PROJECT ENGINEER

BRIDGE NO. 34-0006L/R
KILOMETER POST 13.2/13.9

SAN FRANCISCO OAKLAND BAY BRIDGE
EAST SPAN SEISMIC SAFETY PROJECT
SELF-ANCHORED SUSPENSION BRIDGE
(SUPERSTRUCTURE & TOWER)

BARRIER DETAILS NO. 2J

Rev. Date: 5-18-98

ORIGINAL SCALE IN MILLIMETERS FOR REDUCED PLANS 0 10 20 30 40 50 60 70 80 90 100

CU 04
EA 0120F1

DISREGARD PRINTS BEARING EARLIER REVISION DATES 06/08/12

REVISION DATES (PRELIMINARY STAGE ONLY)

SHEET 473S9 OF

FILE => L:\BB\04-012001\SAS\Contract Plans and CCO\CCO\CCO#244\2-Revision 06-08-12\DGN\akbar03J.dgn

100 % PS&E

USERNAME => arivera DATE PLOTTED => 08 JUN 2012 TIME PLOTTED => 11:22:46