DIST.	COUNTY	ROUTE	KILOMETER POST TOTAL PROJECT	SHEET NO.	TOTAL SHEETS
04	SF	80	13.2/13.9	727SIR1	1204

Caltrans Metric

Daniel J. Turner
REGISTERED ENGINEER - CIVIL
09-01-11
PLANS APPROVAL DATE

REGISTERED PROFESSIONAL ENGINEER Daniel J. Turner No. C 65033 Exp. 06/30/13 CIVIL STATE OF CALIFORNIA

The State of California or its officers or agents shall not be responsible for the accuracy or completeness of electronic copies of this plan sheet.

T.Y. LIN / MOFFATT & NICHOL
825 BATTERY STREET
SAN FRANCISCO, CA 94111

Caltrans now has a web site! To get to the web site, go to: http://www.dot.ca.gov

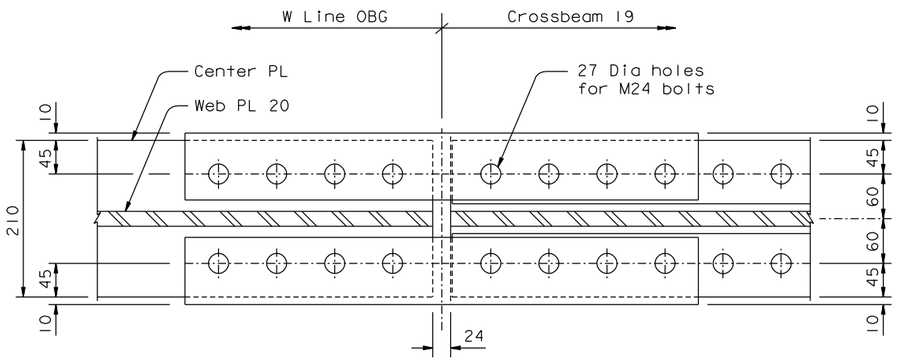

OPTIONAL DETAIL C (See Note 1)
1:4

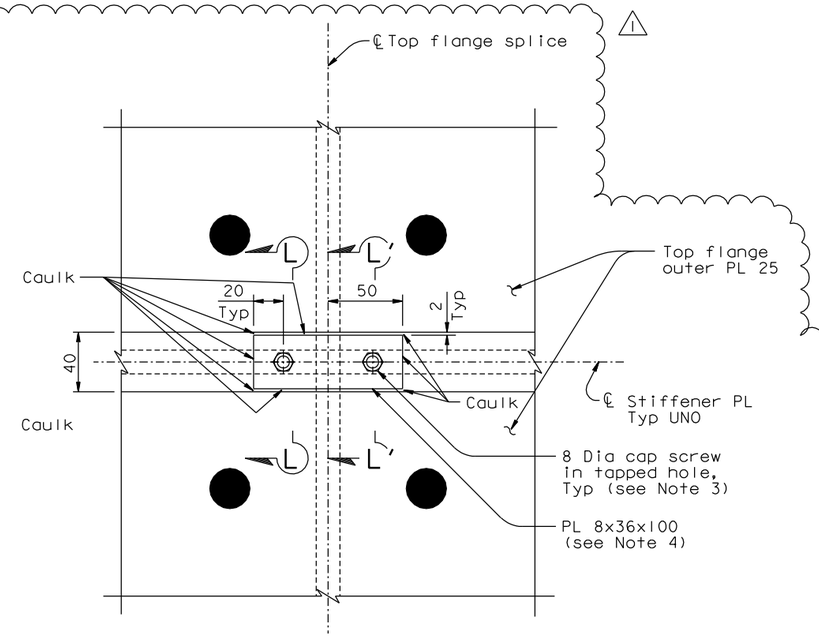

DETAIL H (See Note 2)
1:2

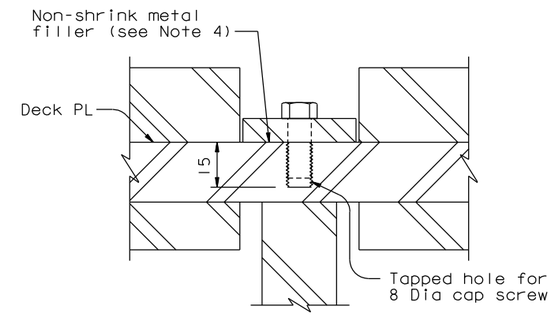

SECTION L-L
1:1
(Section L'-L' Similar)

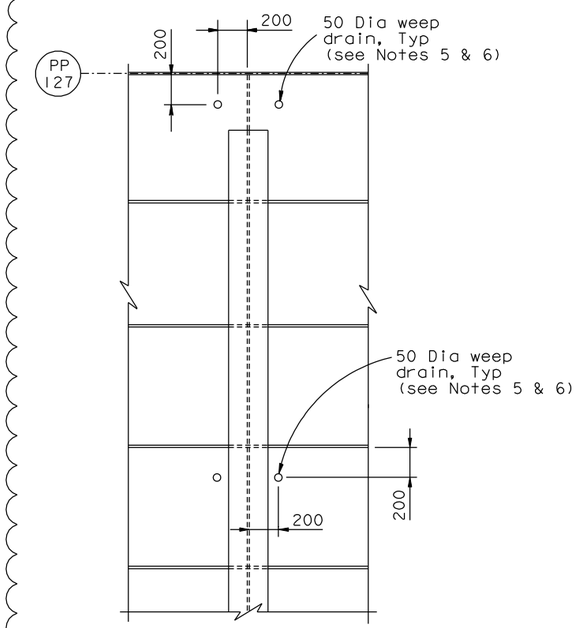

DETAIL J (Detail J' Similar)
1:20

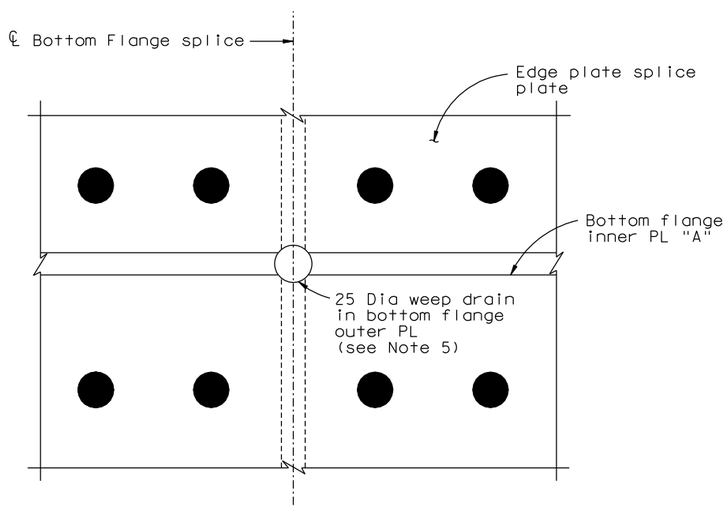

DETAIL K (Detail K' Similar)
1:2

NOTES:

1. At the Contractor's option, optional Detail C may be used to provide additional clearance in the case of Crossbeam to OBG misalignment, subject to review and approval of the Engineer.
2. Detail H is typical for all gaps between top flange exterior splice plates.
3. Cap screws shall have a minimum embedment length of 12 mm in the deck plate and crossbeam top flange plate.
4. Non-shrink metal filler shall be applied to fill gaps and provide a level faying surface for the PL 8.
5. Inside surfaces of weep drains shall be finish painted.
6. 50 Dia weep drains are required at Crossbeam at East Anchorage to "W" Line girder splice only.

100 % PS&E

CONTRACT CHANGE ORDER NO. _____
SHEET ___ OF ___

REQUESTS FOR INFORMATION NOT ADDRESSED IN THIS CCO REMAIN IN FORCE

ALL DIMENSIONS ARE IN MILLIMETERS UNLESS OTHERWISE SHOWN

R. Valizadeh/V. Toan/Y.L./W.L./F.C.
DESIGN OVERSIGHT
Roya Valizadeh / Vong Toan / Y Liu
SIGN OFF DATE 04/30/12

MARK	DATE	DESCRIPTIONS	BY	CH'D	CCO#
1	04/30/12	OBG & CROSSBEAM SEALING	DT	HT	244
0	09/01/11	EAST END OBG	DT	GB	87

REVISIONS

	BY	CHECKED
DESIGN	D. Turner	G. Baker
DETAILS	D. Turner	G. Baker
QUANTITIES	D. Turner	G. Baker

PREPARED FOR THE STATE OF CALIFORNIA DEPARTMENT OF TRANSPORTATION

R. Manzanarez
PROJECT ENGINEER

BRIDGE NO. 34-0006L/R
KILOMETER POST 13.2/13.9

SAN FRANCISCO OAKLAND BAY BRIDGE
EAST SPAN SEISMIC SAFETY PROJECT
SELF-ANCHORED SUSPENSION BRIDGE
(SUPERSTRUCTURE & TOWER)
CROSSBEAM AT EAST ANCHORAGE NO. 4A

Rev. Date: 5-18-98

ORIGINAL SCALE IN MILLIMETERS FOR REDUCED PLANS 0 10 20 30 40 50 60 70 80 90 100

CU 04
EA 0120F1

DISREGARD PRINTS BEARING EARLIER REVISION DATES 09/01/11

REVISION DATES (PRELIMINARY STAGE ONLY)

SHEET 310SIR1 OF

FILE => I:\bb\04-012001\sas\contract plans and cco\cco\cco*244\1-original 04-30-12\dgn\agcrs19a.dgn

USERNAME => DWinrow DATE PLOTTED => 30 APR 2012 TIME PLOTTED => 13:45:01