DIST.	COUNTY	ROUTE	KILOMETER POST TOTAL PROJECT	SHEET NO.	TOTAL SHEETS
04	SF	80	13.2/13.9	722SIR1	1204

REGISTERED ENGINEER - CIVIL

04-18-12
PLANS APPROVAL DATE

REGISTERED PROFESSIONAL ENGINEER Marwan N. Nader No. C 054426 Exp. 12/31/13 CIVIL STATE OF CALIFORNIA

The State of California or its officers or agents shall not be responsible for the accuracy or completeness of electronic copies of this plan sheet.

T.Y. LIN / MOFFATT & NICHOL
825 BATTERY STREET
SAN FRANCISCO, CA 94111

Caltrans now has a web site! To get to the web site, go to: http://www.dot.ca.gov

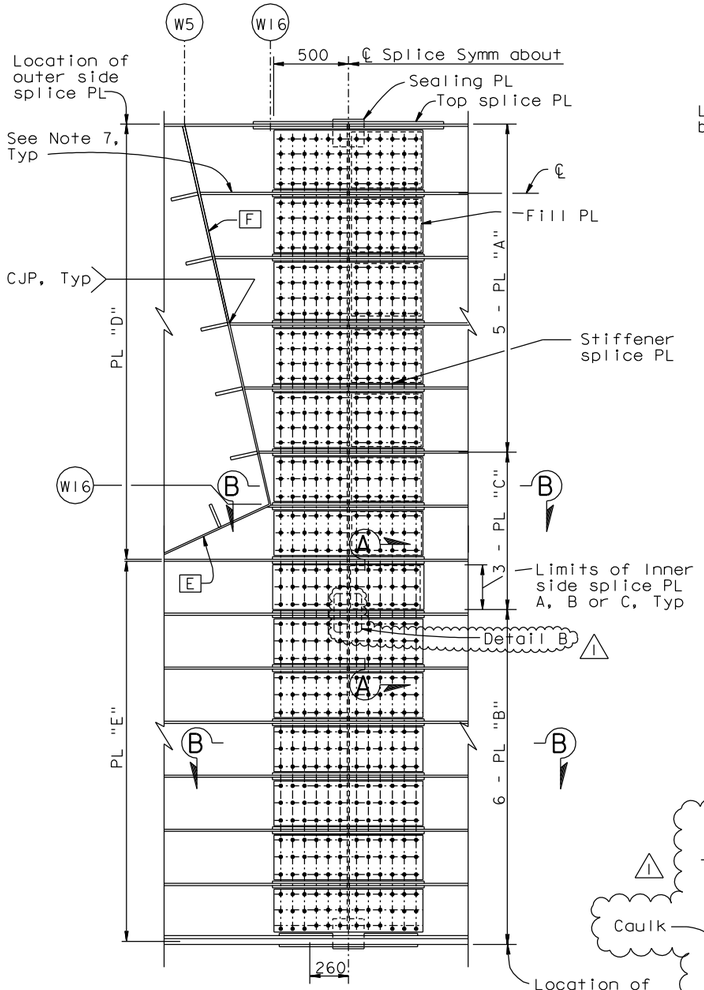

WEB SPLICE DETAIL A
1:20

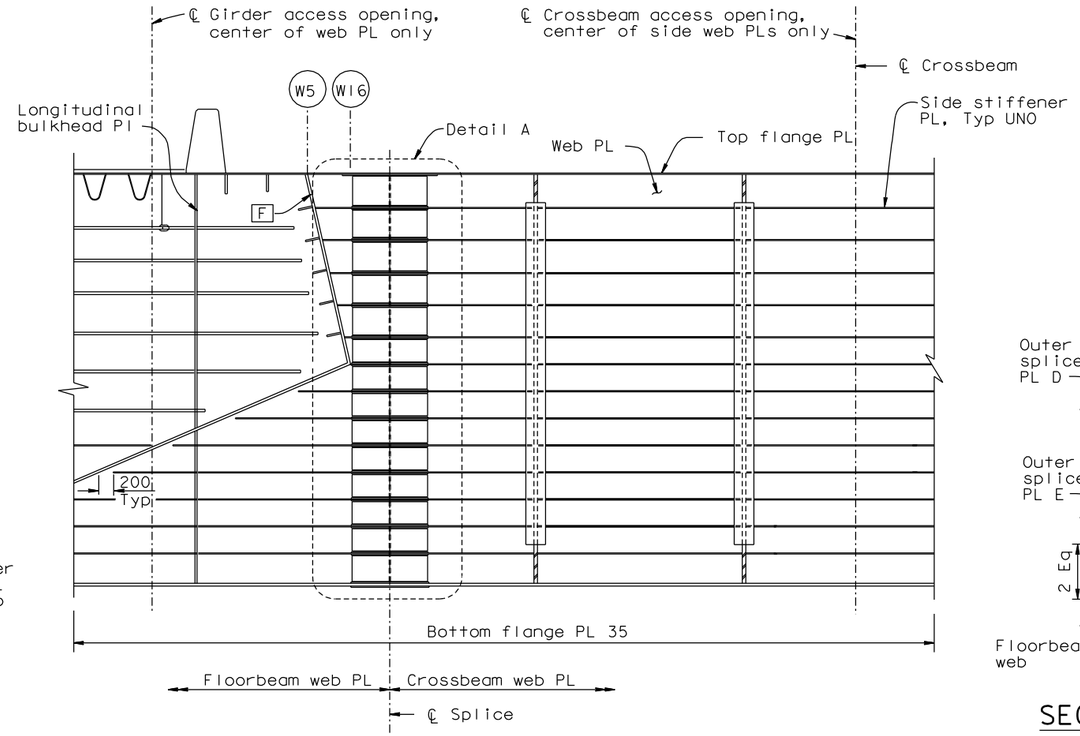

SECTION C'-C'
1:40

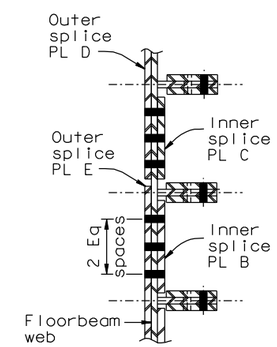

SECTION A-A
1:10

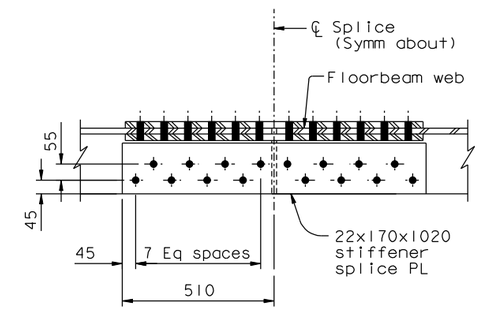

SECTION B-B
1:10

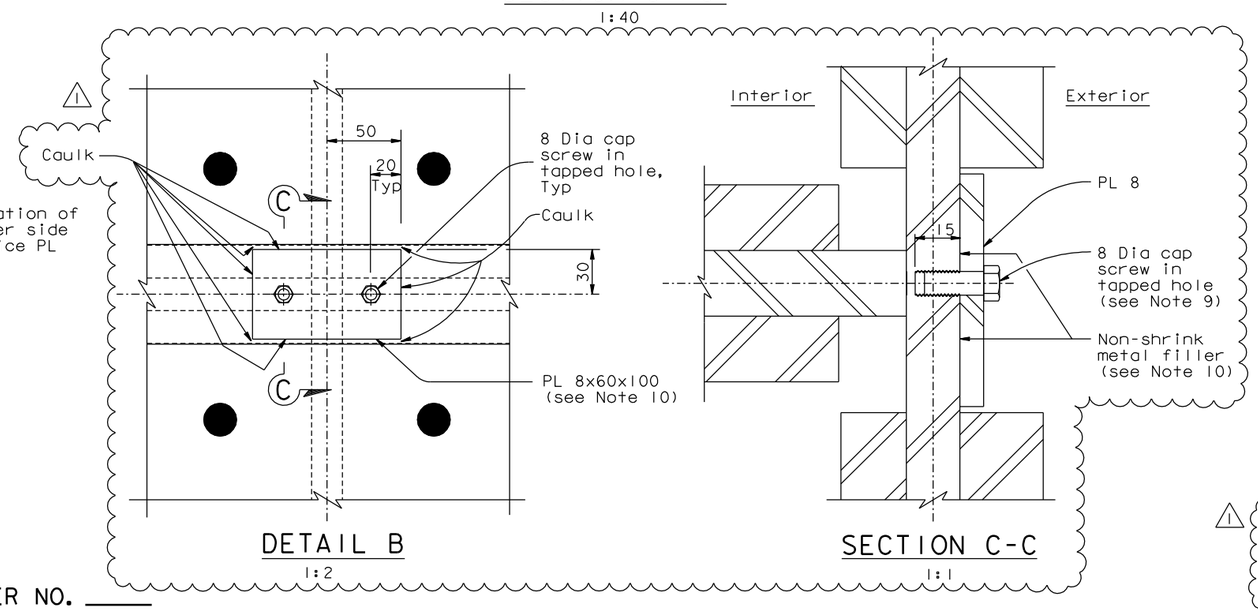

DETAIL B
1:2

SECTION C-C
1:1

SPLICE PLATE TABLE	
Plate Type	Dimensions
Inner Splice PL "A"	PL 22x1000x390
Inner Splice PL "B"	PL 22x1000x310
Outer Splice PL "D"	PL 28x1000x3170
Inner Splice PL "C"	PL 22x1000x310
Outer Splice PL "E"	PL 28x1000x2140

NOTES:

1. For details at girder access opening, see "Typical Girder Details No.15" sheet.
2. For details of crossbeam access opening not shown, see "Typical Crossbeam Details No.6" sheet.
3. For details not shown, see "Typical Crossbeam Details" sheets.
4. For layout of E2 floorbeam web, see "Girder At Pier E2 No.4" sheet.
5. For girder access locations, see "Girder Access Details No.3" sheet.
6. For details not shown, see "Typical Crossbeam Details No.5" sheet.
7. Transitions not required for crossbeam web stiffeners terminating at Face F.
8. For Section D-D, see "Crossbeam At Pier E2 No.5" sheet.
9. Cap screws shall have a minimum embedment length of 12 mm in the crossbeam web plate. (1)
10. Non-shrink metal filler shall be applied to fill gaps and provide a level faying surface for the PL 8.

100% PS&E

CONTRACT CHANGE ORDER NO. _____
SHEET ____ OF ____

REQUESTS FOR INFORMATION NOT ADDRESSED IN THIS CCO REMAIN IN FORCE

ALL DIMENSIONS ARE IN MILLIMETERS UNLESS OTHERWISE SHOWN

R. Valizadeh/V. Toan/Y.L./W.L./F.C.
DESIGN OVERSIGHT
SIGN OFF DATE 04/30/12

MARK	DATE	DESCRIPTIONS	BY	CH'D	CCO#
1	04/30/12	OBG & CROSSBEAM SEALING	DT	HT	244
0	04/18/12	EAST END OBG	GB	MN	87

REVISIONS

	BY	CHECKED
DESIGN	G. Baker	M. Nader
DETAILS	G. Baker	D. Turner
QUANTITIES	G. Baker	D. Turner

PREPARED FOR THE STATE OF CALIFORNIA DEPARTMENT OF TRANSPORTATION

R. Manzanarez
PROJECT ENGINEER

BRIDGE NO. 34-0006L/R
KILOMETER POST 13.2/13.9

SAN FRANCISCO OAKLAND BAY BRIDGE
EAST SPAN SEISMIC SAFETY PROJECT
SELF-ANCHORED SUSPENSION BRIDGE
(SUPERSTRUCTURE & TOWER)

CROSSBEAM AT PIER E2 NO.6A

Rev. Date: 5-18-98

ORIGINAL SCALE IN MILLIMETERS FOR REDUCED PLANS 0 10 20 30 40 50 60 70 80 90 100

CU 04
EA 0120F1

DISREGARD PRINTS BEARING EARLIER REVISION DATES

REVISION DATES (PRELIMINARY STAGE ONLY) 04/18/12

SHEET 305SIR1 OF

FILE => I:\bb\04-012001\sas\contract plans and cco\cco\cco*244\1-original 04-30-12\dgn\agcrsl7a.dgn

USERNAME => DWinrow DATE PLOTTED => 30 APR 2012 TIME PLOTTED => 13:41:21