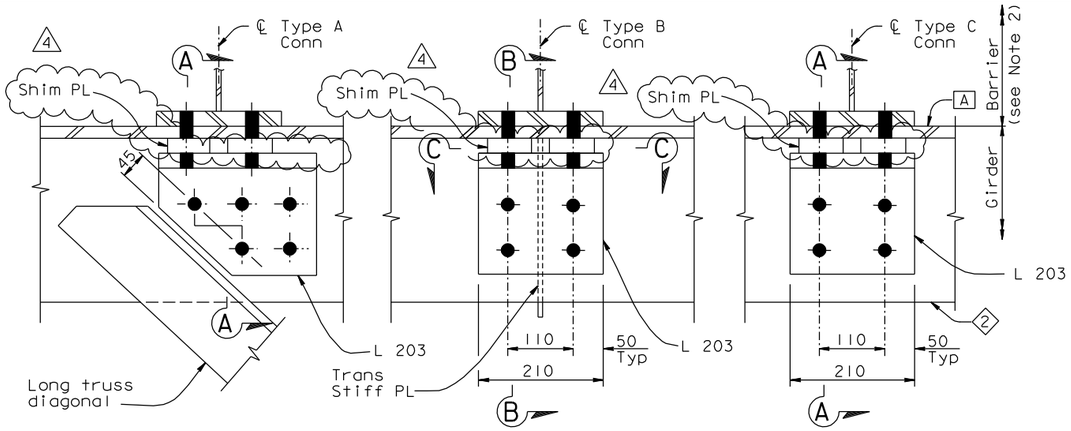

BARRIER CONNECTION DETAILS (See Note 1)

1:5

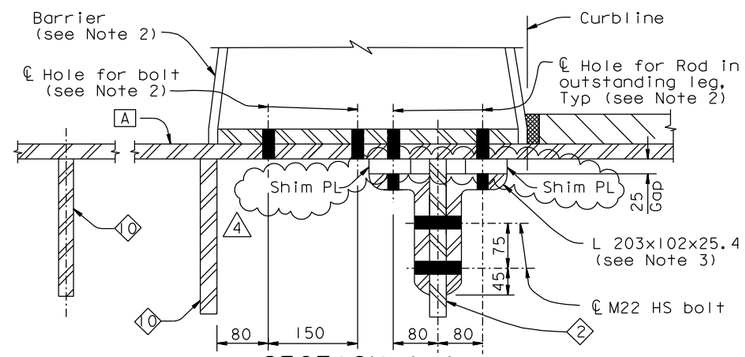

SECTION A-A

1:5

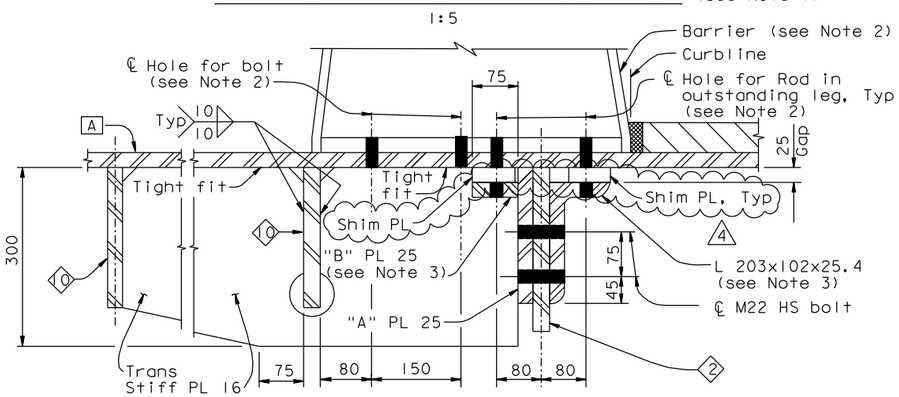

SECTION B-B

1:5

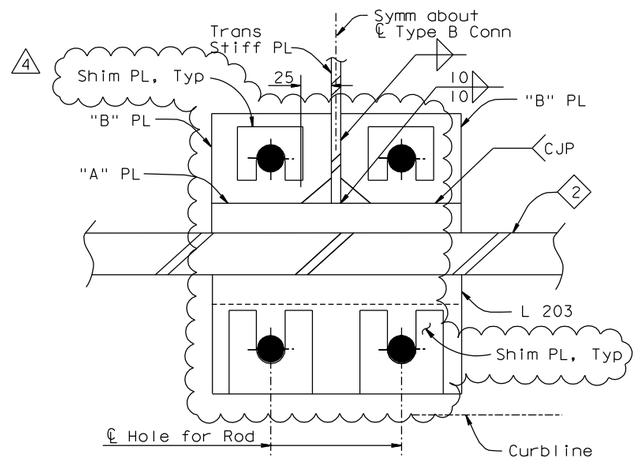

SECTION C-C

1:2.5

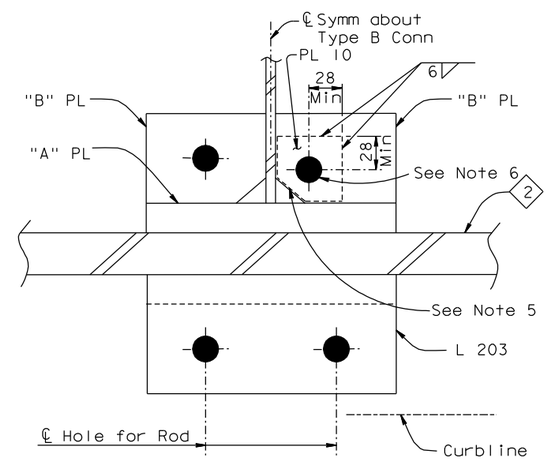

ALTERNATE SECTION C-C (See Note 4)

1:2.5

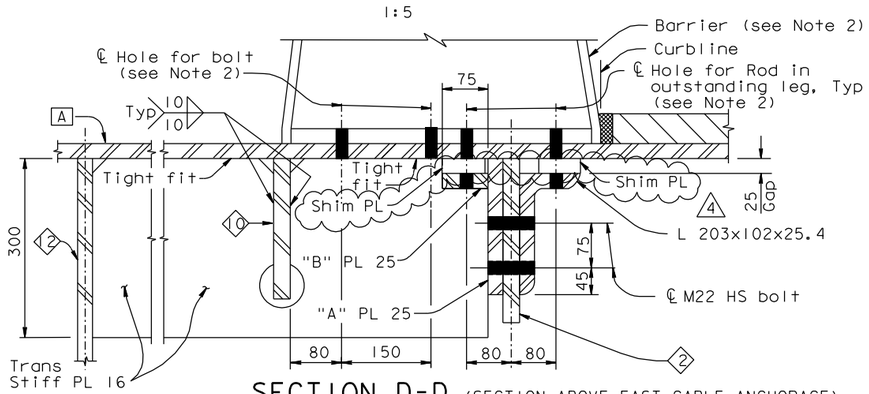

SECTION D-D (SECTION ABOVE EAST CABLE ANCHORAGE)

1:5

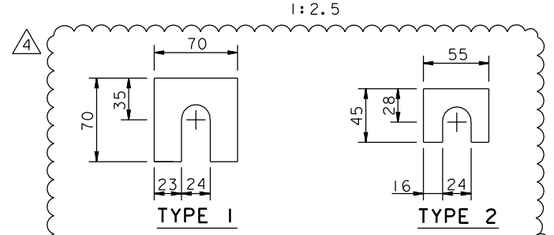

BARRIER SHIMS (See Notes 7 & 8)

1:2.5

SUGGESTED SHIM INSTALLATION PROCEDURE:

1. Loosen bottom anchor rod nuts.
2. Insert two shim plates between the deck plate and the L 203 outstanding leg or "B" PL, such that the gap between the deck plate and shim plate is no more than 1 mm.
3. Tighten the anchor rods snug tight plus one-half turn.

NOTES:

1. For location of typical barrier connection types A, B and C, see "Typical Girder Details No. 12" sheet.
2. For typical barrier details, see "Barrier Details" sheets.
3. For bolt hole deviation due to fit-up tolerance, the minimum acceptable edge distance shall be 28 mm for angles and 32 mm for fabricated plate or cut edges.
4. As a result of mis-drilled holes during fabication, Alternate Section C-C may be used on a Fit-for-purpose basis where edge distance is less than 22 mm. For details not shown, see Section C-C.
5. Snipe PL 10 to clear weld. Grind weld to 10 mm fillet if necessary.
6. Match drill PL 10 bolt hole from deck.
7. Type 1 shims shall be installed to encircle the anchor rod above outstanding legs of L 203x102x25.4. Type 2 shims shall be installed above "B" PL at Type B connections.
8. Shims shall be provided in thicknesses of 10 mm, 11 mm, 12 mm, 13 mm, and 14 mm.

ALL DIMENSIONS ARE IN MILLIMETERS UNLESS OTHERWISE SHOWN

DIST.	COUNTY	ROUTE	KILOMETER POST TOTAL PROJECT	SHEET NO.	TOTAL SHEETS
04	SF	80	13.2/13.9	638R4	1204

Caltrans Metric

George Baker
REGISTERED ENGINEER - CIVIL
12-6-04
PLANS APPROVAL DATE

REGISTERED PROFESSIONAL ENGINEER George S. Baker No. C 57112 Exp. 12/31/05 CIVIL STATE OF CALIFORNIA

The State of California or its officers or agents shall not be responsible for the accuracy or completeness of electronic copies of this plan sheet.

T.Y. LIN / MOFFATT & NICHOL
825 BATTERY STREET
SAN FRANCISCO, CA 94111

Caltrans now has a web site! To get to the web site, go to: http://www.dot.ca.gov

REGISTERED PROFESSIONAL ENGINEER Marwan N. Nader No. C 054426 Exp. 12/31/13 CIVIL STATE OF CALIFORNIA

FOR REVISIONS ONLY

CONTRACT CHANGE ORDER NO. _____
SHEET ____ OF ____

REQUESTS FOR INFORMATION NOT ADDRESSED IN THIS CCO REMAIN IN FORCE

MARK	DATE	DESCRIPTIONS	BY	CH'D	CCO#
4	06/08/12	OBG & CROSSBEAM SEALING	DT	HT	244
3	09/01/11	EAST END OBG	MN	DT	87
2	09/14/10	BARRIER MODIFICATIONS	GB	MN	44
1	04/05/10	BARRIER MODIFICATIONS	GB	MN	44

REVISIONS

R. Valizadeh/V. Toan/Y.L./W.L./F.C.
DESIGN OVERSIGHT
SIGN OFF DATE 06/08/12

	BY	CHECKED
DESIGN	G. Baker	P. Ritchie
DETAILS	C. Mauch	T. McMeans
QUANTITIES	G. Baker	M. Roberts

PREPARED FOR THE STATE OF CALIFORNIA DEPARTMENT OF TRANSPORTATION

R. Manzanarez
PROJECT ENGINEER

BRIDGE NO. 34-0006L/R
KILOMETER POST 13.2/13.9

SAN FRANCISCO OAKLAND BAY BRIDGE
EAST SPAN SEISMIC SAFETY PROJECT
SELF-ANCHORED SUSPENSION BRIDGE
(SUPERSTRUCTURE & TOWER)

TYPICAL GIRDER DETAILS NO. 14

Rev. Date: 5-18-98

ORIGINAL SCALE IN MILLIMETERS FOR REDUCED PLANS 0 10 20 30 40 50 60 70 80 90 100

CU 04
EA 0120F1

DISREGARD PRINTS BEARING EARLIER REVISION DATES

REVISION DATES (PRELIMINARY STAGE ONLY) 05/31/01 04/08/02 07/01/02 12/19/02

SHEET 221R4 OF

FILE => L:\BB\04-012001\SAS\Contract Plans and CCO\CCO\CCO#244\2-Revision 06-08-12\DGN\agdkd09.dgn

USERNAME => arivera DATE PLOTTED => 08 JUN 2012 TIME PLOTTED => 11:20:05

100% PS&E