NOTES:
1. For Details C, D and E, and Section D-D, see "Typical Crossbeam Details No. 6" sheet.
2. For stiffener termination detail, see "Typical Crossbeam Details No. 6" sheet.
3. For Detail J, see "Typical Crossbeam Details No. 10" sheet.
4. In order to accommodate the "W" line and "E" line roadway profiles crossbeams at PP 14 to 28 bend at diaphragms. For roadway profiles see "Road Plans". For details see "Typical Crossbeam Details No. 4" sheet.
5. Detail H shall apply at exterior plates only. See "Typical Crossbeam Details No. 6A" sheet. (3)

LEGEND:
"Indicates SPCM web plate"
"Indicates SPCM & TTP web plate"

Caltrans Metric

DIST.	COUNTY	ROUTE	KILOMETER POST TOTAL PROJECT	SHEET NO.	TOTAL SHEETS
04	SF	80	13.2/13.9	659R3	1204

George Baker
REGISTERED ENGINEER - CIVIL
1-27-03
PLANS APPROVAL DATE
REGISTERED PROFESSIONAL ENGINEER George S. Baker No. C 57112 Exp. 12/31/05 CIVIL STATE OF CALIFORNIA
The State of California or its officers or agents shall not be responsible for the accuracy or completeness of electronic copies of this plan sheet.

T.Y. LIN / MOFFATT & NICHOL
825 BATTERY STREET
SAN FRANCISCO, CA 94111

Caltrans now has a web site! To get to the web site, go to http://www.dot.ca.gov

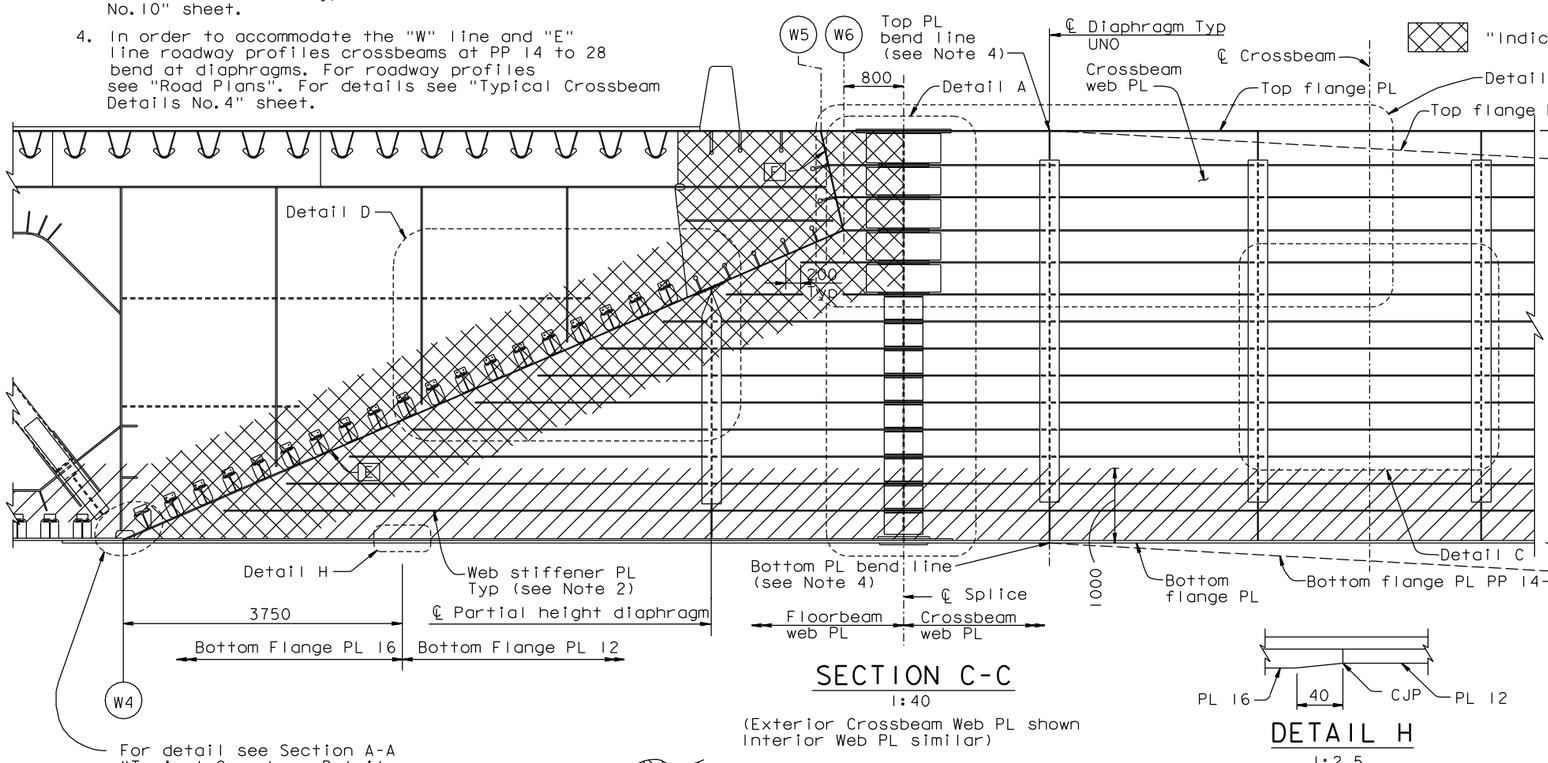

SECTION C-C
1:40
(Exterior Crossbeam Web PL shown Interior Web PL similar)

DETAIL H
1:2.5

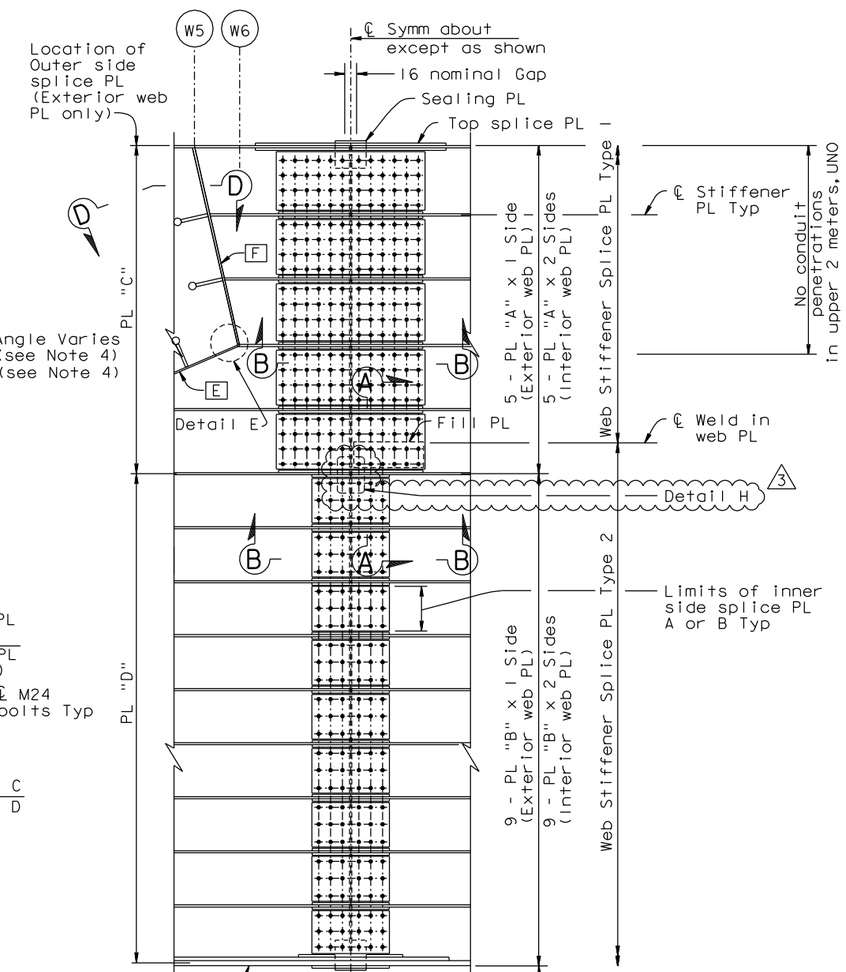

WEB SPLICE
DETAIL A
1:20

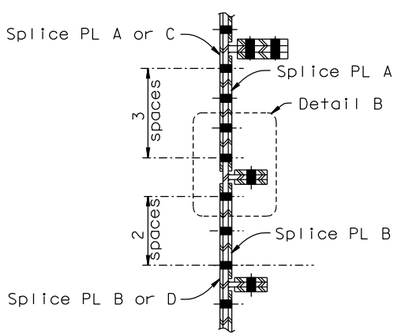

SECTION A-A
1:10

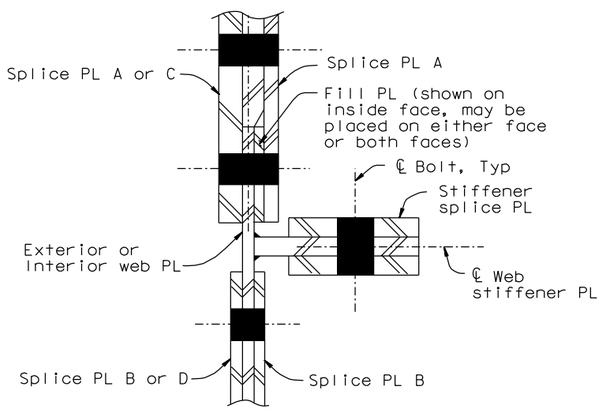

DETAIL B
1:2.5

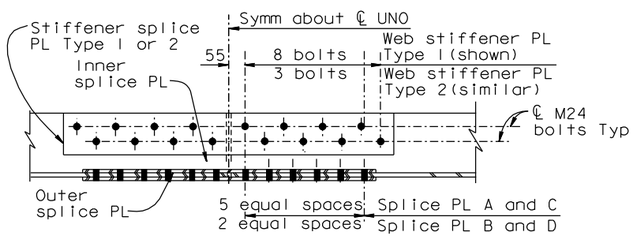

SECTION B-B
1:10

SPLICE PLATE TABLE	
Plate Type	Dimensions
Inner Side PL "A"	PL 14x378x1000
Inner Side PL "B"	PL 10x310x520
Outer Side PL "C"	PL 20x1000x2102
Outer Side PL "D"	PL 14x520x3206
Web Stiff PL Type 1	PL 20x150x970
Web Stiff PL Type 2	PL 14x110x560

CONTRACT CHANGE ORDER NO. ____
SHEET ____ OF ____

REQUESTS FOR INFORMATION NOT ADDRESSED IN THIS CCO REMAIN IN FORCE

REGISTERED PROFESSIONAL ENGINEER Daniel J. Turner No. C 65033 Exp. 06/30/13 CIVIL STATE OF CALIFORNIA
FOR REVISIONS ONLY

ALL DIMENSIONS ARE IN MILLIMETERS UNLESS OTHERWISE SHOWN

MARK	DATE	DESCRIPTIONS	BY	CH'D	CCO#
3	04/30/12	OBG & CROSSBEAM SEALING	DT	HT	244
2	04/02/07	CROSSBEAM KINK	GB	DT	38
1	06/23/06	STIFFENER SIZE INCREASE	GB	NV	21

REVISIONS

R. Valizadeh/V. Toan/Y.L./W.L./F.C.
DESIGN OVERSIGHT
SIGN OFF DATE 04/30/12

Rev. Date: 5-18-98

	BY	CHECKED
DESIGN	G. Baker	P. Ritchie
DETAILS	D. Veytsman	T. McMeans
QUANTITIES	G. Baker	M. Roberts

PREPARED FOR THE STATE OF CALIFORNIA DEPARTMENT OF TRANSPORTATION

R. Manzanarez
PROJECT ENGINEER

BRIDGE NO. 34-0006L/R
KILOMETER POST 13.2/13.9

SAN FRANCISCO OAKLAND BAY BRIDGE
EAST SPAN SEISMIC SAFETY PROJECT
SELF-ANCHORED SUSPENSION BRIDGE
(SUPERSTRUCTURE & TOWER)

TYPICAL CROSSBEAM DETAILS NO. 5

ORIGINAL SCALE IN MILLIMETERS FOR REDUCED PLANS 0 10 20 30 40 50 60 70 80 90 100

CU 04
EA 0120F1

DISREGARD PRINTS BEARING EARLIER REVISION DATES

REVISION DATES (PRELIMINARY STAGE ONLY) 08/02/99 05/31/01 01/08/02 01/08/02 12/19/02

SHEET 242R3 OF

FILE => L:\BB\04-012001\SAS\Contract Plans and CCO\CCO\CCO#244\1-Original 04-30-12\DGN\agcrs07.dgn

100% PS&E

USERNAME => DWinrow DATE PLOTTED => 30 APR 2012 TIME PLOTTED => 13:36:33

DIST.	COUNTY	ROUTE	KILOMETER POST TOTAL PROJECT	SHEET NO.	TOTAL SHEETS
04	SF	80	13.2/13.9	660S1	1204

Caltrans Metric

Daniel J. Turner
REGISTERED ENGINEER - CIVIL

04-30-12
PLANS APPROVAL DATE

REGISTERED PROFESSIONAL ENGINEER Daniel J. Turner No. C 65033 Exp. 06/30/13 CIVIL STATE OF CALIFORNIA

The State of California or its officers or agents shall not be responsible for the accuracy or completeness of electronic copies of this plan sheet.

T.Y. LIN / MOFFATT & NICHOL
825 BATTERY STREET
SAN FRANCISCO, CA 94111

Caltrans now has a web site! To get to the web site, go to: http://www.dot.ca.gov

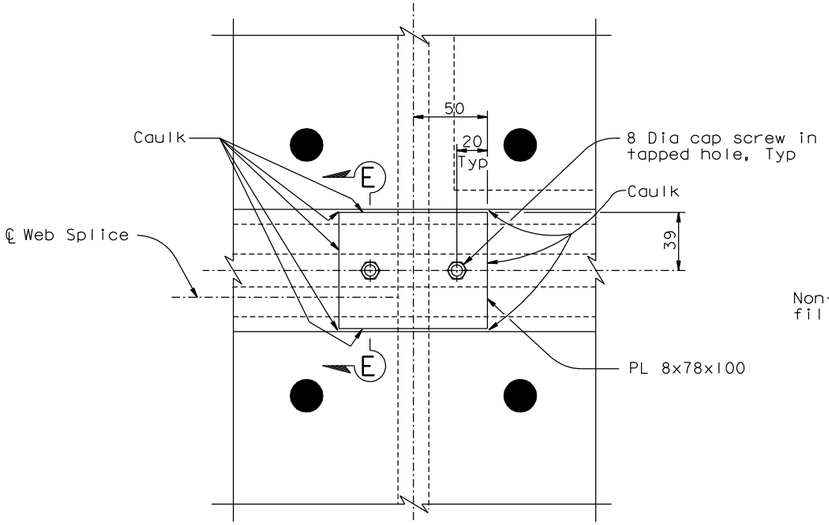

DETAIL H (Exterior Web Splice Shown) (See Note 1)
1:2

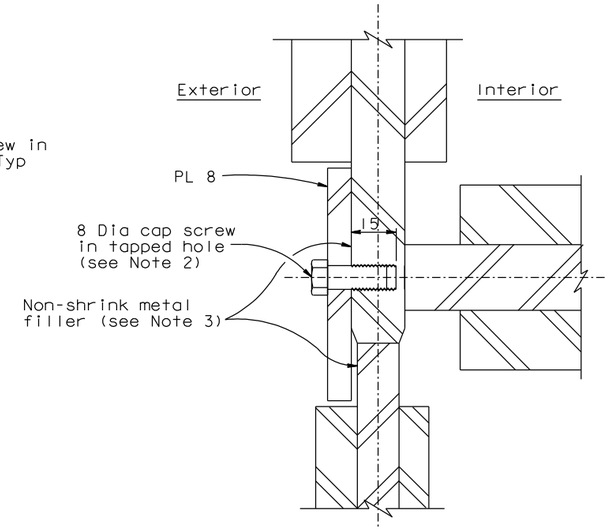

SECTION E-E
1:1

NOTES:

1. Detail H shall apply at exterior plates only.
2. Cap screws shall have a minimum embedment length of 12 mm in the crossbeam web plate.
3. Non-shrink metal filler shall be applied to fill gaps and provide a level faying surface for the PL 8.

CONTRACT CHANGE ORDER NO. _____
SHEET ____ OF ____

REQUESTS FOR INFORMATION NOT ADDRESSED IN THIS CCO REMAIN IN FORCE

ALL DIMENSIONS ARE IN MILLIMETERS UNLESS OTHERWISE SHOWN

R. Valizadeh/V. Toan/Y.L./W.L./F.C.
DESIGN OVERSIGHT
SIGN OFF DATE 04/30/12

MARK	DATE	DESCRIPTIONS	BY	CH'D	CCO#
0	04/30/12	OBG & CROSSBEAM SEALING	DT	HT	244

REVISIONS

	BY	CHECKED
DESIGN	D. Turner	H. Tazir
DETAILS	D. Turner	H. Tazir
QUANTITIES	D. Turner	H. Tazir

PREPARED FOR THE STATE OF CALIFORNIA DEPARTMENT OF TRANSPORTATION

R. Manzanarez
PROJECT ENGINEER

BRIDGE NO. 34-0006L/R
KILOMETER POST 13.2/13.9

SAN FRANCISCO OAKLAND BAY BRIDGE
EAST SPAN SEISMIC SAFETY PROJECT
SELF-ANCHORED SUSPENSION BRIDGE
(SUPERSTRUCTURE & TOWER)

TYPICAL CROSSBEAM DETAILS NO. 6A

Rev. Date: 5-18-98

ORIGINAL SCALE IN MILLIMETERS FOR REDUCED PLANS 0 10 20 30 40 50 60 70 80 90 100

CU 04
EA 0120F1

DISREGARD PRINTS BEARING EARLIER REVISION DATES

REVISION DATES (PRELIMINARY STAGE ONLY) 04/30/12

SHEET 243S1 OF

FILE => I:\bb\04-012001\sas\contract plans and cco\cco\cco=244\1-original 04-30-12\dgn\agcrs08a.dgn

USERNAME => DWinrow DATE PLOTTED => 30 APR 2012 TIME PLOTTED => 13:37:58

100 % PS&E

DIST.	COUNTY	ROUTE	KILOMETER POST TOTAL PROJECT	SHEET NO.	TOTAL SHEETS
04	SF	80	13.2/13.9	695R4	1204

George Baker
REGISTERED ENGINEER - CIVIL
12-6-04
PLANS APPROVAL DATE

REGISTERED PROFESSIONAL ENGINEER George S. Baker No. C57112 Exp. 12/31/05 CIVIL STATE OF CALIFORNIA

The State of California or its officers or agents shall not be responsible for the accuracy or completeness of electronic copies of this plan sheet.

T.Y. LIN / MOFFATT & NICHOL
825 BATTERY STREET
SAN FRANCISCO, CA 94111

Caltrans now has a web site! To get to the web site, go to: http://www.dot.ca.gov

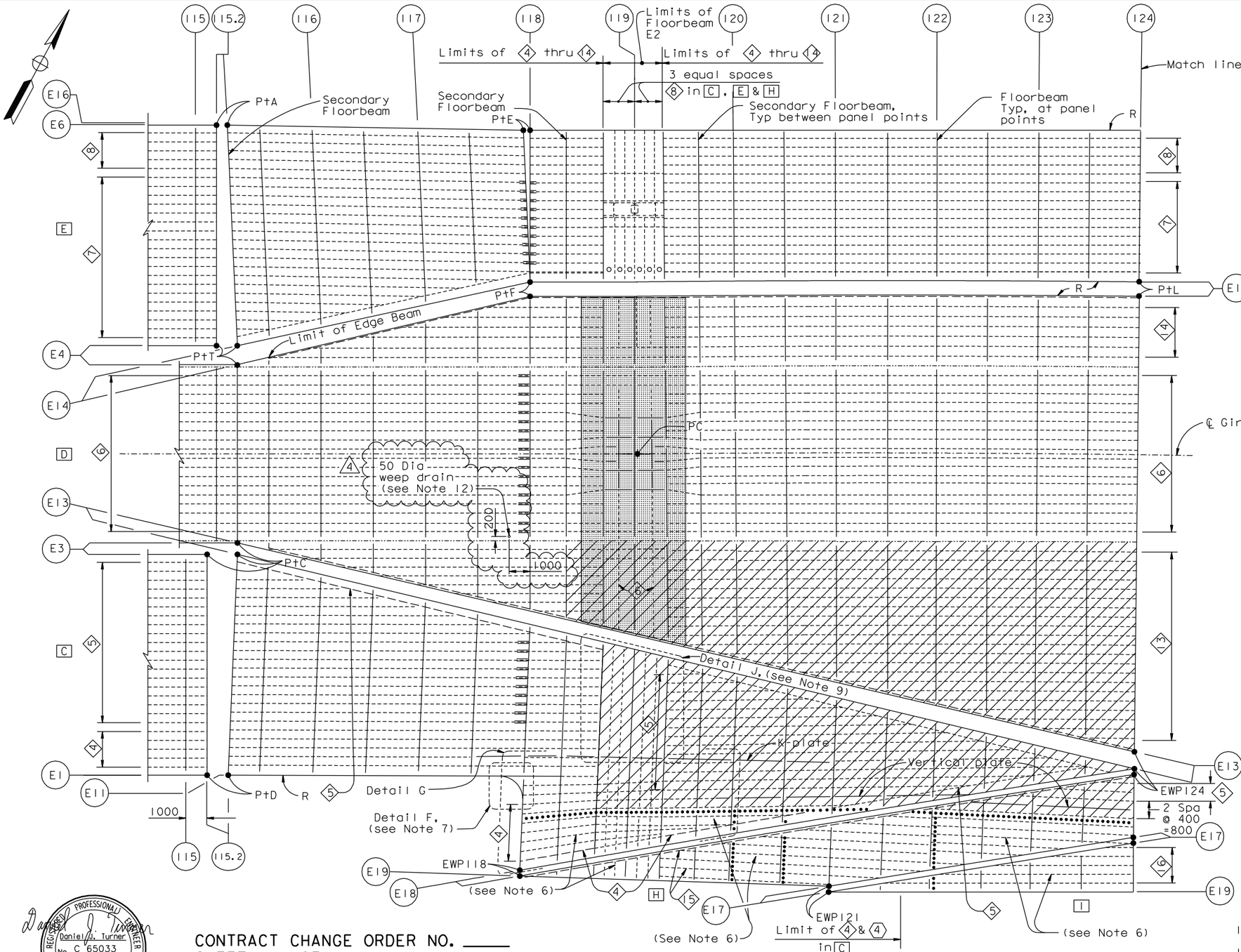

FACES C, D, E & G
("E" LINE SHOWN, "W" LINE SIMILAR)

BOTTOM GIRDER FACE LAYOUT

1:100

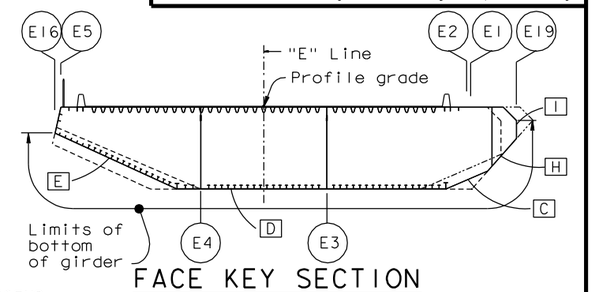

FACE KEY SECTION

1:200

LEGEND:

- "Indicates Key Plate", key plate shall be TTP (see Note 3)
- Indicates SPCM shell plate only UNO
- D — Girder face designation D
- Stiffener type 5, 6, 7, 8 or 9
- Other stiffener
- Edge beam, (see Note 4)
- Longitudinal shear plate type 2
- Bolted splice, (see Note 6)
- 5 — Stiffener type 5 designation
- R - Radius, (see Note 2)
- Pt A - Point A, (see Note 2)
- EWP - "E" Line working point
- K-plate, vertical plate

NOTES:

1. For details and dimensions not shown, see "Girder At East Transition No. 1" through "Girder At East Transition No. 4" sheets.
2. Dimensions not given shall be determined from the highway geometry and box girder working points.
3. For Details at Floorbeam E2, see "Girder At Pier E2 No. 1" sheet.
4. Unless noted otherwise, edge beam shall have the same dimensions and details as longitudinal shear plate type 1, see "Typical Girder Details No. 8" and "Typical Floorbeam Details No. 5" sheets.
5. Plate edges identified with "R" are curved. All other plate edges are straight.
6. For PP118 to 124 the indicated portions of C, H and I, bounded by the bolted splices are architectural housings. For bolted splice details, see "Girder At East Transition Details No. 3" sheet. Housing shall be installed after full cable dead load force is applied to the box girder.
7. For Detail F, see "Girder At East Transition Details No. 4" sheet.
8. For stiffener transition details near PP118, see "Typical Girder Details No. 16A" sheet.
9. For Detail J, see "Girder At East Transition No. 13A" sheet.
10. For Detail G, see "Girder At East Transition Details No. 13A" sheet.
11. For SPCM shell PL ranges west of PP 115 -700 mm, see "Girder Framing Details, No. 2" sheet.
12. (4) Provide weep drain at corresponding location adjacent to W4 Line.

Daniel J. Turner
REGISTERED PROFESSIONAL ENGINEER Daniel J. Turner No. C 65033 Exp. 06/30/13 CIVIL STATE OF CALIFORNIA

FOR REVISIONS ONLY

CONTRACT CHANGE ORDER NO. _____
SHEET ____ OF ____

REQUESTS FOR INFORMATION NOT ADDRESSED IN THIS CCO REMAIN IN FORCE

MARK	DATE	DESCRIPTIONS	BY	CH'D	CCO#
4	04/30/12	OBG & CROSSBEAM SEALING	DT	HT	244
3	03/21/12	EAST END OBG	DT	GB	87
2	03/02/12	OBG RETROFIT AT PP119	GB	MN	238
1	05/20/11	STIFFENER TRANSITIONS AT PP14 & PP118	DT	GB	204

REVISIONS

ALL DIMENSIONS ARE IN MILLIMETERS UNLESS OTHERWISE SHOWN

R. Valizadeh/V. Toan/Y.L./W.L./F.C.
DESIGN OVERSIGHT
Y. Liu
SIGN OFF DATE 04/30/12

	BY	CHECKED
DESIGN	G. Baker	P. Ritchie
DETAILS	M. Gulyas	T. McMeans
QUANTITIES	G. Baker	M. Roberts

PREPARED FOR THE STATE OF CALIFORNIA DEPARTMENT OF TRANSPORTATION

R. Manzanarez
PROJECT ENGINEER

BRIDGE NO. 34-0006L/R
KILOMETER POST 13.2/13.9

SAN FRANCISCO OAKLAND BAY BRIDGE
EAST SPAN SEISMIC SAFETY PROJECT
SELF-ANCHORED SUSPENSION BRIDGE
(SUPERSTRUCTURE & TOWER)

GIRDER AT EAST TRANSITION NO. 13

Rev. Date: 5-18-98

ORIGINAL SCALE IN MILLIMETERS FOR REDUCED PLANS 0 10 20 30 40 50 60 70 80 90 100

CU 04
EA 0120F1

DISREGARD PRINTS BEARING EARLIER REVISION DATES → 05/31/01 04/08/02 07/01/02 12/19/02

SHEET 278R4 OF

FILE => I:\bb\04-012001\sas\contract plans and cco\cco\cco#244\1-original 04-30-12\dgn\agegd09.dgn

USERNAME => DWinrow DATE PLOTTED => 30 APR 2012 TIME PLOTTED => 13:39:12

100% PS&E

DIST.	COUNTY	ROUTE	KILOMETER POST TOTAL PROJECT	SHEET NO.	TOTAL SHEETS
04	SF	80	13.2/13.9	721R2	1204

Caltrans Metric

George Baker
REGISTERED ENGINEER - CIVIL
12-6-04
PLANS APPROVAL DATE

REGISTERED PROFESSIONAL ENGINEER George S. Baker No. C57112 Exp. 12/31/05 CIVIL STATE OF CALIFORNIA

The State of California or its officers or agents shall not be responsible for the accuracy or completeness of electronic copies of this plan sheet.

T.Y. LIN / MOFFATT & NICHOL
825 BATTERY STREET
SAN FRANCISCO, CA 94111

Caltrans now has a web site! To get to the web site, go to: http://www.dot.ca.gov

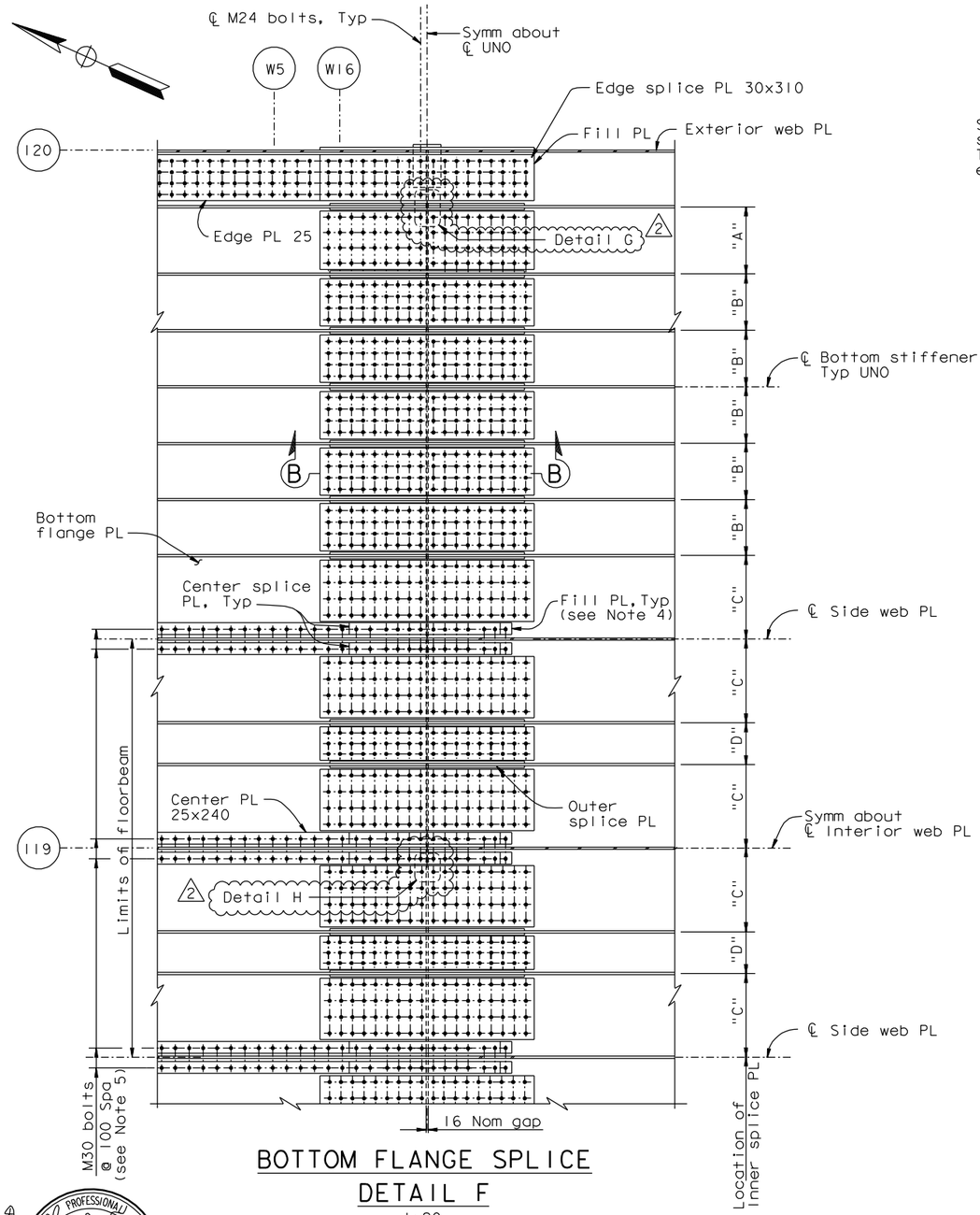

BOTTOM FLANGE SPLICE
DETAIL F
1:20

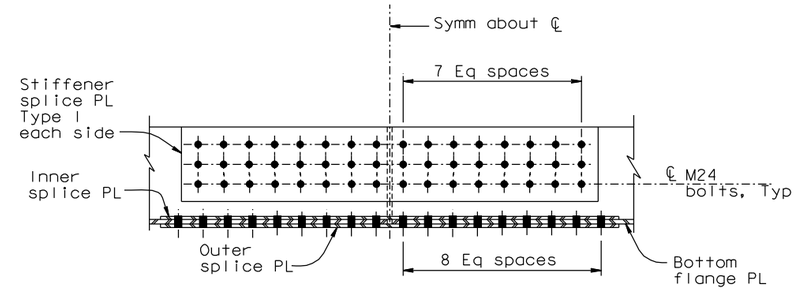

SECTION B-B
1:10

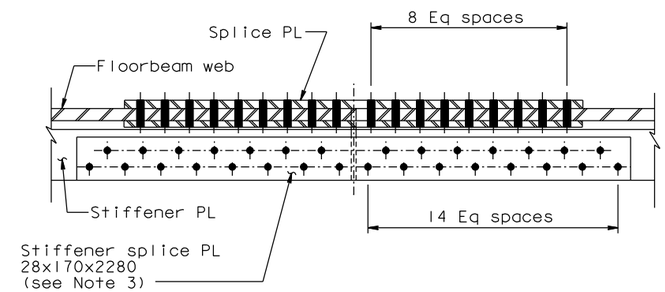

SECTION D-D
1:10

SPLICE PLATE TABLE	
Plate Type	Dimensions
Inner PL "A"	PL 25x1620x420
Inner PL "B"	PL 25x1620x340
Inner PL "C"	PL 25x1620x440
Inner PL "D"	PL 25x1620x240
Outer PL	PL 30x1620x9980
Stiff PL Type 1	PL 30x250x1440

2

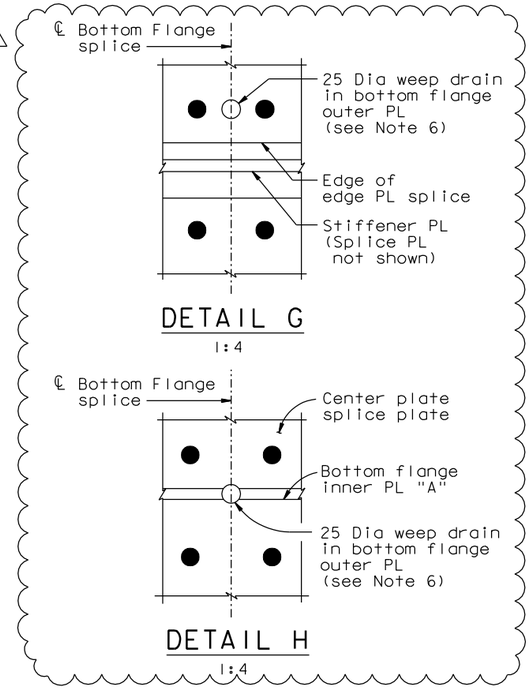

NOTES:

1. For details not shown, see "Typical Crossbeam Details No.8" sheet.
2. For details not shown, see "Typical Crossbeam Details" sheets.
3. At the Contractor's option, the stiffener splice PL length may be reduced to 1740, subject to review and approval of the Engineer.
4. For crossbeam segments which vary in depth within the specified tolerances, the Contractor shall use fill plates in the bottom splice to correct for the variation. Fill plates shown on the plans shall be adjusted as required to bring splice plates into contact.
5. At the Contractor's option, it is acceptable to space the M30 bolts at 90 mm, subject to review and approval of the Engineer.
6. Inside surfaces of weep drain shall be finish painted. (2)

REGISTERED PROFESSIONAL ENGINEER Daniel J. Turner No. C 65033 Exp. 06/30/13 CIVIL STATE OF CALIFORNIA

FOR REVISIONS ONLY

CONTRACT CHANGE ORDER NO. _____
SHEET ____ OF ____

REQUESTS FOR INFORMATION NOT ADDRESSED IN THIS CCO REMAIN IN FORCE

ALL DIMENSIONS ARE IN MILLIMETERS UNLESS OTHERWISE SHOWN

R. Valizadeh/V. Toan/Y.L./W.L./F.C.
DESIGN OVERSIGHT
SIGN OFF DATE 04/30/12

MARK	DATE	DESCRIPTIONS	BY	CH'D	CCO#
2	04/30/12	OBG & CROSSBEAM SEALING	DT	HT	244
1	09/01/11	EAST END OBG	DT	GB	87

REVISIONS

	BY	CHECKED
DESIGN	G. Baker	P. Ritchie
DETAILS	D. Veytsman	T. McMeans
QUANTITIES	D. Turner	M. Roberts

PREPARED FOR THE STATE OF CALIFORNIA DEPARTMENT OF TRANSPORTATION

R. Manzanarez
PROJECT ENGINEER

BRIDGE NO. 34-0006L/R
KILOMETER POST 13.2/13.9

SAN FRANCISCO OAKLAND BAY BRIDGE
EAST SPAN SEISMIC SAFETY PROJECT
SELF-ANCHORED SUSPENSION BRIDGE
(SUPERSTRUCTURE & TOWER)

CROSSBEAM AT PIER E2 NO.5

Rev. Date: 5-18-98

ORIGINAL SCALE IN MILLIMETERS FOR REDUCED PLANS 0 10 20 30 40 50 60 70 80 90 100

CU 04
EA 0120F1

DISREGARD PRINTS BEARING EARLIER REVISION DATES

REVISION DATES (PRELIMINARY STAGE ONLY) 05/15/99 08/02/99 05/31/01 04/08/02 07/01/02 12/18/02 12/01/05

SHEET 304R2 OF

FILE => I:\bb\04-012001\sas\contract plans and cco\cco\cco#244\1-original 04-30-12\dgn\agcrs16.dgn

USERNAME => DWinrow DATE PLOTTED => 30 APR 2012 TIME PLOTTED => 13:40:16

100% PS&E

DIST.	COUNTY	ROUTE	KILOMETER POST TOTAL PROJECT	SHEET NO.	TOTAL SHEETS
04	SF	80	13.2/13.9	722SIR1	1204

REGISTERED ENGINEER - CIVIL

04-18-12
PLANS APPROVAL DATE

REGISTERED PROFESSIONAL ENGINEER Marwan N. Nader No. C 054426 Exp. 12/31/13 CIVIL STATE OF CALIFORNIA

The State of California or its officers or agents shall not be responsible for the accuracy or completeness of electronic copies of this plan sheet.

T.Y. LIN / MOFFATT & NICHOL
825 BATTERY STREET
SAN FRANCISCO, CA 94111

Caltrans now has a web site! To get to the web site, go to: http://www.dot.ca.gov

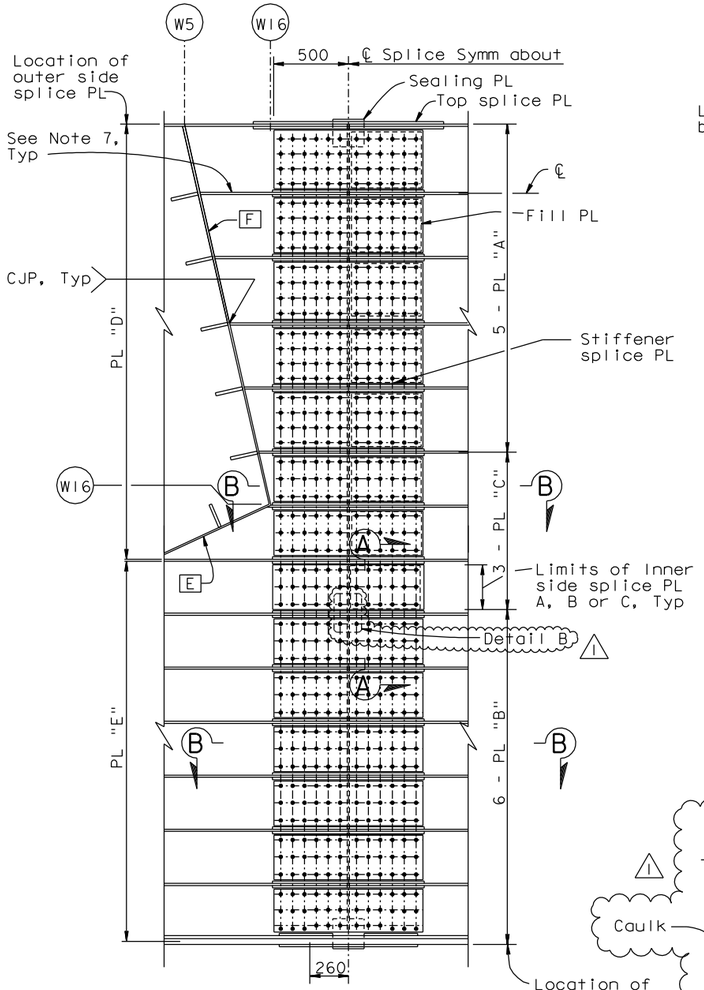

WEB SPLICE DETAIL A
1:20

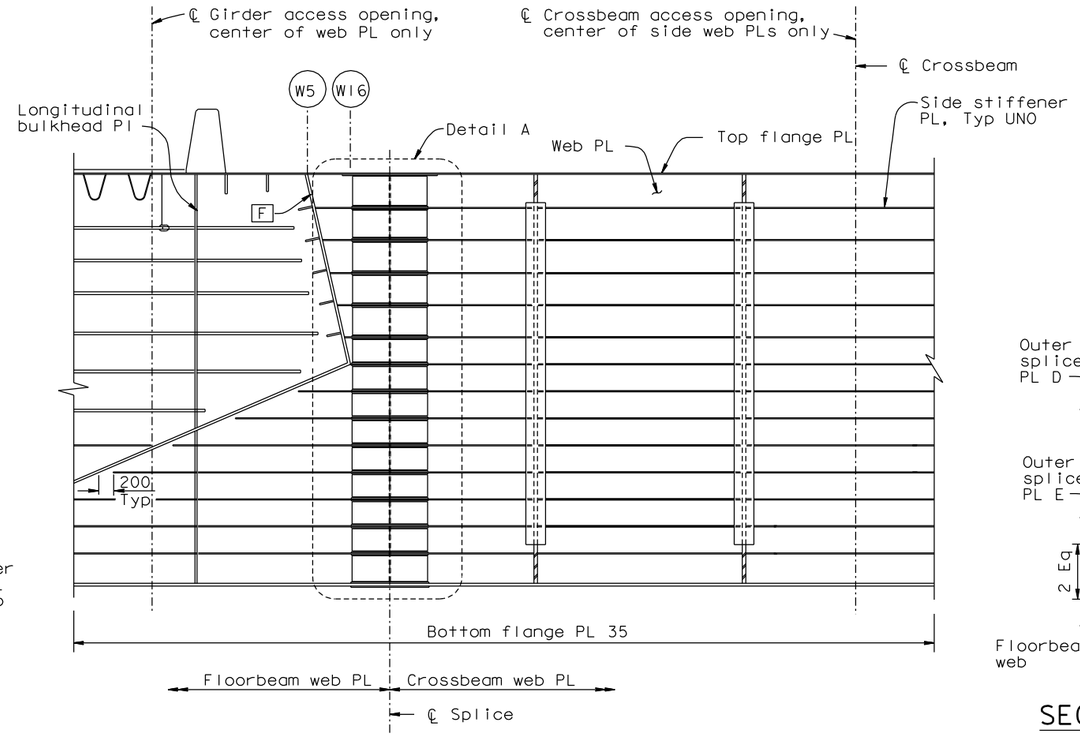

SECTION C'-C'
1:40

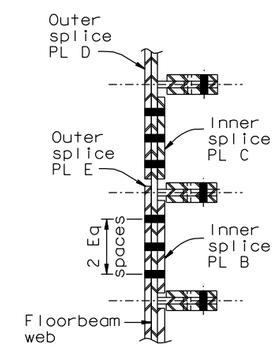

SECTION A-A
1:10

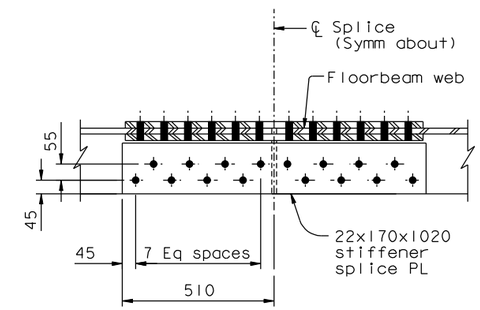

SECTION B-B
1:10

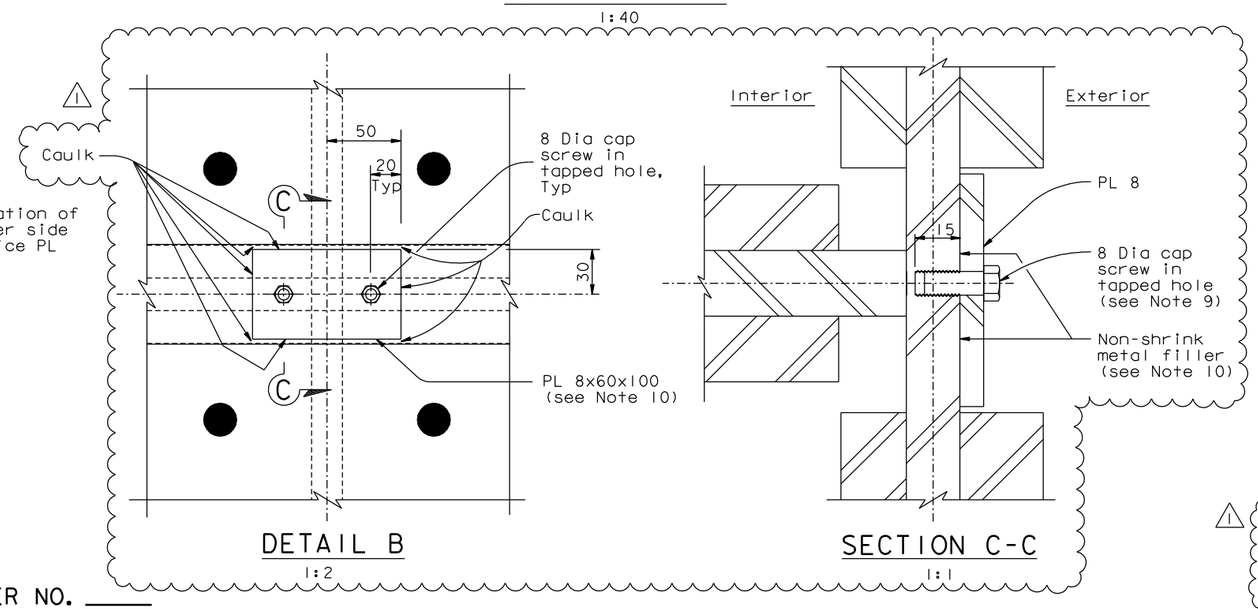

DETAIL B
1:2

SECTION C-C
1:1

SPLICE PLATE TABLE	
Plate Type	Dimensions
Inner Splice PL "A"	PL 22x1000x390
Inner Splice PL "B"	PL 22x1000x310
Outer Splice PL "D"	PL 28x1000x3170
Inner Splice PL "C"	PL 22x1000x310
Outer Splice PL "E"	PL 28x1000x2140

NOTES:

1. For details at girder access opening, see "Typical Girder Details No.15" sheet.
2. For details of crossbeam access opening not shown, see "Typical Crossbeam Details No.6" sheet.
3. For details not shown, see "Typical Crossbeam Details" sheets.
4. For layout of E2 floorbeam web, see "Girder At Pier E2 No.4" sheet.
5. For girder access locations, see "Girder Access Details No.3" sheet.
6. For details not shown, see "Typical Crossbeam Details No.5" sheet.
7. Transitions not required for crossbeam web stiffeners terminating at Face F.
8. For Section D-D, see "Crossbeam At Pier E2 No.5" sheet.
9. Cap screws shall have a minimum embedment length of 12 mm in the crossbeam web plate. (1)
10. Non-shrink metal filler shall be applied to fill gaps and provide a level faying surface for the PL 8.

100% PS&E

CONTRACT CHANGE ORDER NO. _____
SHEET ____ OF ____

REQUESTS FOR INFORMATION NOT ADDRESSED IN THIS CCO REMAIN IN FORCE

ALL DIMENSIONS ARE IN MILLIMETERS UNLESS OTHERWISE SHOWN

R. Valizadeh/V. Toan/Y.L./W.L./F.C.
DESIGN OVERSIGHT
SIGN OFF DATE 04/30/12

MARK	DATE	DESCRIPTIONS	BY	CH'D	CCO#
1	04/30/12	OBG & CROSSBEAM SEALING	DT	HT	244
0	04/18/12	EAST END OBG	GB	MN	87

REVISIONS

	BY	CHECKED
DESIGN	G. Baker	M. Nader
DETAILS	G. Baker	D. Turner
QUANTITIES	G. Baker	D. Turner

PREPARED FOR THE STATE OF CALIFORNIA DEPARTMENT OF TRANSPORTATION

R. Manzanarez
PROJECT ENGINEER

BRIDGE NO. 34-0006L/R
KILOMETER POST 13.2/13.9

SAN FRANCISCO OAKLAND BAY BRIDGE
EAST SPAN SEISMIC SAFETY PROJECT
SELF-ANCHORED SUSPENSION BRIDGE
(SUPERSTRUCTURE & TOWER)

CROSSBEAM AT PIER E2 NO.6A

Rev. Date: 5-18-98

ORIGINAL SCALE IN MILLIMETERS FOR REDUCED PLANS 0 10 20 30 40 50 60 70 80 90 100

CU 04
EA 0120F1

DISREGARD PRINTS BEARING EARLIER REVISION DATES

REVISION DATES (PRELIMINARY STAGE ONLY) 04/18/12

SHEET 305SIR1 OF

FILE => I:\bb\04-012001\sas\contract plans and cco\cco\cco*244\1-original 04-30-12\dgn\agcrsl7a.dgn

USERNAME => DWinrow DATE PLOTTED => 30 APR 2012 TIME PLOTTED => 13:41:21

DIST.	COUNTY	ROUTE	KILOMETER POST TOTAL PROJECT	SHEET NO.	TOTAL SHEETS
04	SF	80	13.2/13.9	724R1	1204

George Baker
REGISTERED ENGINEER - CIVIL

12-6-04
PLANS APPROVAL DATE

REGISTERED PROFESSIONAL ENGINEER George S. Baker No. C 57112 Exp. 12/31/05 CIVIL STATE OF CALIFORNIA

The State of California or its officers or agents shall not be responsible for the accuracy or completeness of electronic copies of this plan sheet.

T.Y. LIN / MOFFATT & NICHOL
825 BATTERY STREET
SAN FRANCISCO, CA 94111

Caltrans now has a web site! To get to the web site, go to: http://www.dot.ca.gov

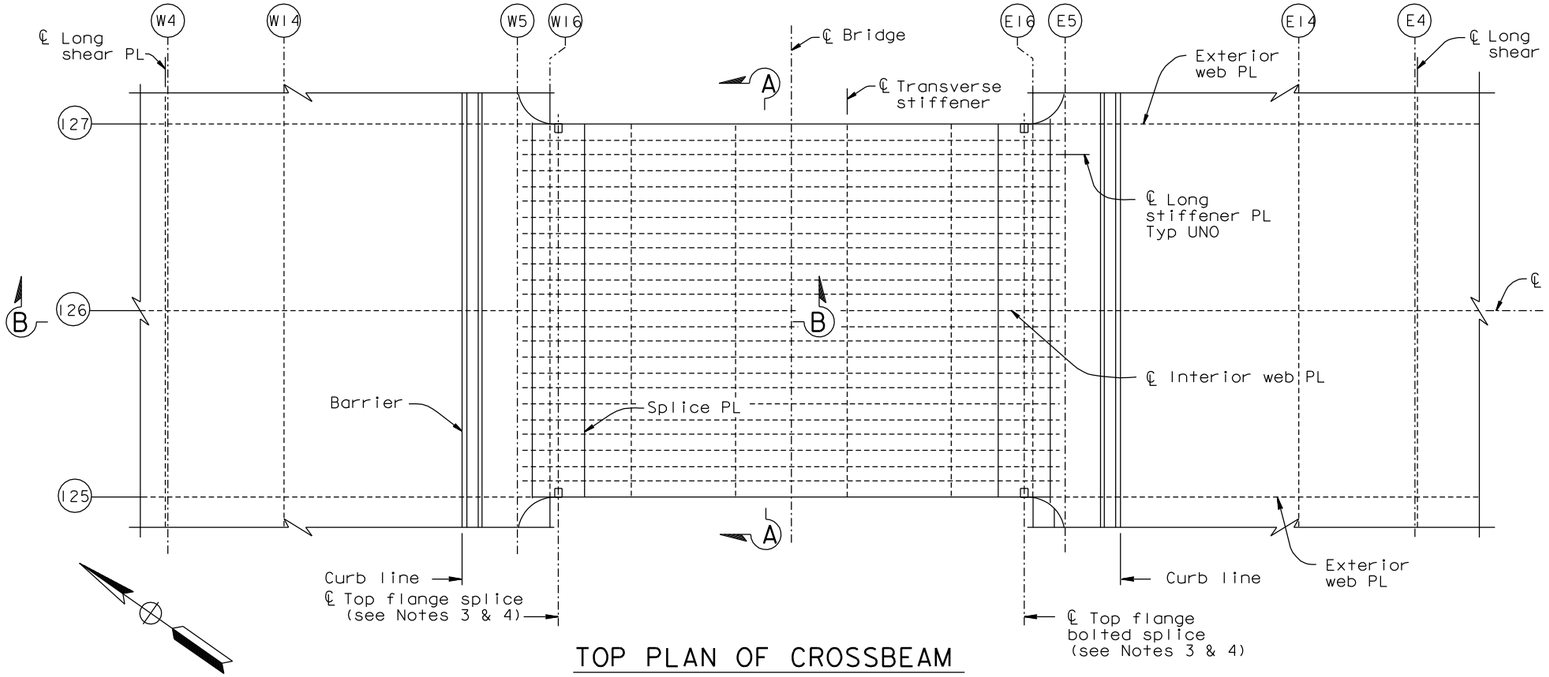

TOP PLAN OF CROSSBEAM
1:80

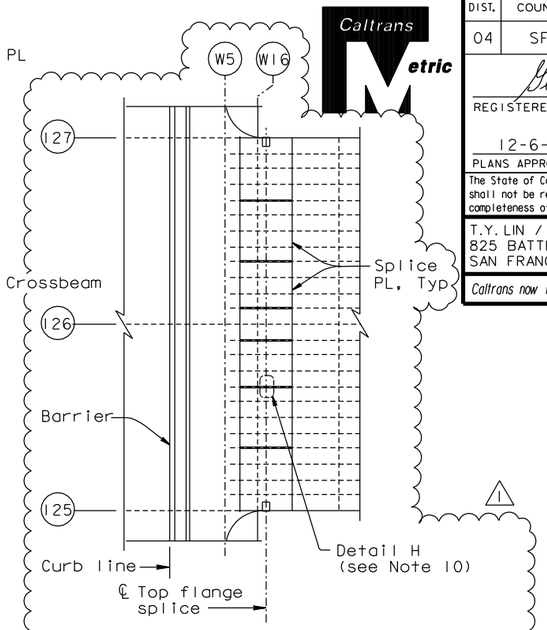

ALTERNATIVE TOP PLAN
BOLTED SPLICE (See Note 9)
1:80
("W" Line Shown, "E" Line Similar)

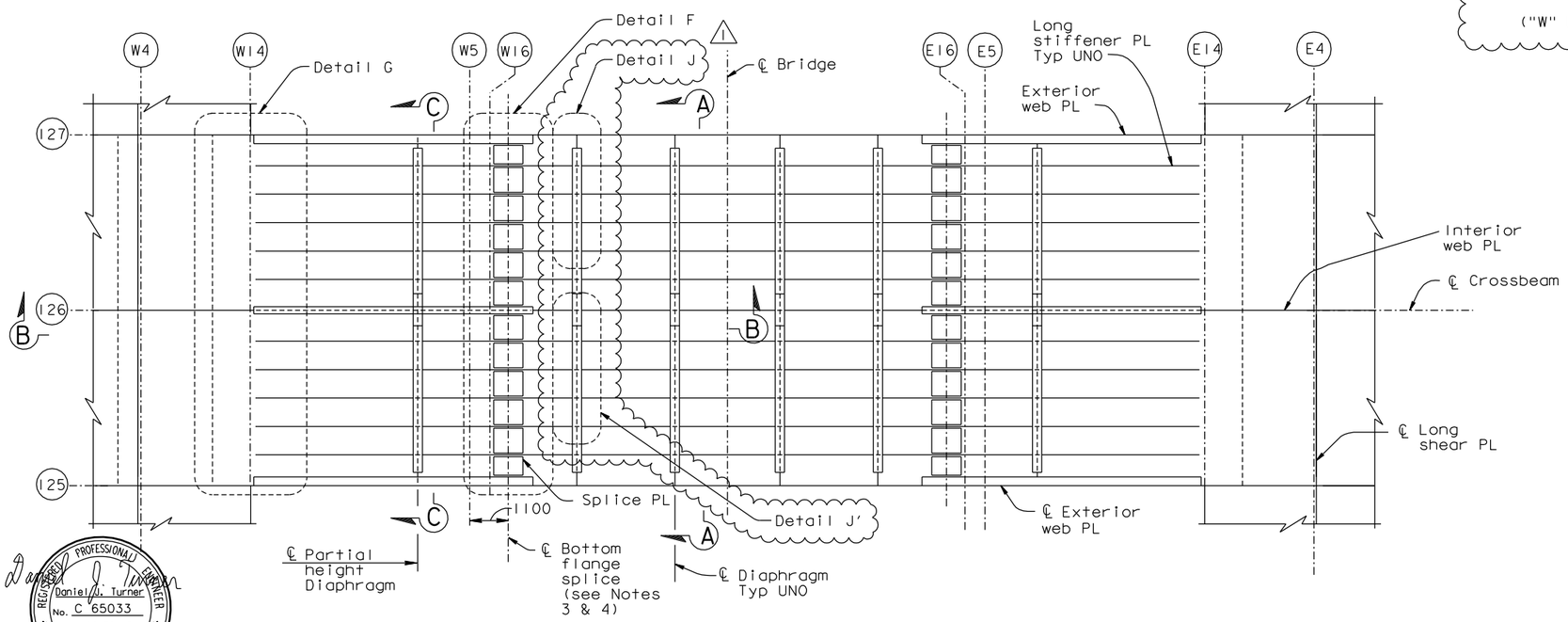

BOTTOM PLAN OF CROSSBEAM
1:80

NOTES:

1. For crossbeam details not shown, see "Typical Crossbeam Details" sheets.
2. For Details F & G, see "Crossbeam At East Anchorage No.4" sheet.
3. For crossbeam splice details not shown, see similar "Typical Crossbeam Details No.7" sheet, and similar "Crossbeam At Pier E2 No.6" sheet.
4. The "W" Line and "E" Line girders at the east approach shall be cambered to provide an additional gap of 15 mm (J=K=15 mm) at each crossbeam splice. For details, see "Camber Diagram" sheets. Prior to installation of splice plates, the gap shall be closed by applying a jacking force totaling 30 MN. The Contractor shall design his own jacking system, subject to the approval of the Engineer. Suggested jacking locations are shown in "Crossbeam At East Anchorage No.2" sheet.
5. For "Crossbeam at East Anchorage" sheets, all bolts shall be detailed according to the bolt dimension table. See "Typical Girder Details No.1" sheet. All bolts are high strength unless noted otherwise.
6. For "Crossbeam at East Anchorage" sheets unless noted otherwise all fillet welds shall be 6 mm for plate sizes not greater than 20 mm. For plates greater than 20 mm fillet welds shall be 8 mm unless noted otherwise.
7. For Section A-A and C-C, see "Crossbeam At East Anchorage No.3" sheet.
8. For Section B-B, see "Crossbeam At East Anchorage No.2" sheet.
9. To suit the Contractor's means and methods, "Alternative Top Plan Bolted Splice" detail may be used, subject to the Engineer's approval.
10. For Details H, J and J', see "Crossbeam At East Anchorage No.4" sheet.

Daniel J. Turner
REGISTERED PROFESSIONAL ENGINEER Daniel J. Turner No. C 65033 Exp. 06/30/13 CIVIL STATE OF CALIFORNIA

FOR REVISIONS ONLY

CONTRACT CHANGE ORDER NO. ____
SHEET ____ OF ____

REQUESTS FOR INFORMATION NOT ADDRESSED IN THIS CCO REMAIN IN FORCE

ALL DIMENSIONS ARE IN MILLIMETERS UNLESS OTHERWISE SHOWN

R. Valizadeh/V. Toan/Y.L./W.L./F.C.
DESIGN OVERSIGHT
SIGN OFF DATE 04/30/12

MARK	DATE	DESCRIPTIONS	BY	CH'D	CCO#
1	04/30/12	OBG & CROSSBEAM SEALING	DT	HT	244

REVISIONS

	BY	CHECKED
DESIGN	G. Baker	P. Ritchie
DETAILS	D. Veytsman	T. McMeans
QUANTITIES	C. Mauch	M. Roberts

PREPARED FOR THE STATE OF CALIFORNIA DEPARTMENT OF TRANSPORTATION

R. Manzanarez
PROJECT ENGINEER

BRIDGE NO. 34-0006L/R
KILOMETER POST 13.2/13.9

SAN FRANCISCO OAKLAND BAY BRIDGE
EAST SPAN SEISMIC SAFETY PROJECT
SELF-ANCHORED SUSPENSION BRIDGE
(SUPERSTRUCTURE & TOWER)

CROSSBEAM AT EAST ANCHORAGE NO. 1

Rev. Date: 5-18-98

ORIGINAL SCALE IN MILLIMETERS FOR REDUCED PLANS 0 10 20 30 40 50 60 70 80 90 100

CU 04
EA 0120F1

DISREGARD PRINTS BEARING EARLIER REVISION DATES

REVISION DATES (PRELIMINARY STAGE ONLY) 05/15/99 08/02/99 05/31/01 04/08/02 01/07/02 12/19/02

SHEET 307R1 OF

FILE => I:\bb\04-012001\sas\contract plans and cco\cco\cco#244\1-original 04-30-12\dgn\agcrs06a.dgn

USERNAME => DWinrow DATE PLOTTED => 30 APR 2012 TIME PLOTTED => 13:42:36

100% PS&E

DIST.	COUNTY	ROUTE	KILOMETER POST TOTAL PROJECT	SHEET NO.	TOTAL SHEETS
04	SF	80	13.2/13.9	727R2	1204

George Baker
REGISTERED ENGINEER - CIVIL
12-6-04
PLANS APPROVAL DATE

REGISTERED PROFESSIONAL ENGINEER George S. Baker No. C57112 Exp. 12/31/05 CIVIL STATE OF CALIFORNIA

The State of California or its officers or agents shall not be responsible for the accuracy or completeness of electronic copies of this plan sheet.

T.Y. LIN / MOFFATT & NICHOL
825 BATTERY STREET
SAN FRANCISCO, CA 94111

Caltrans now has a web site! To get to the web site, go to: http://www.dot.ca.gov

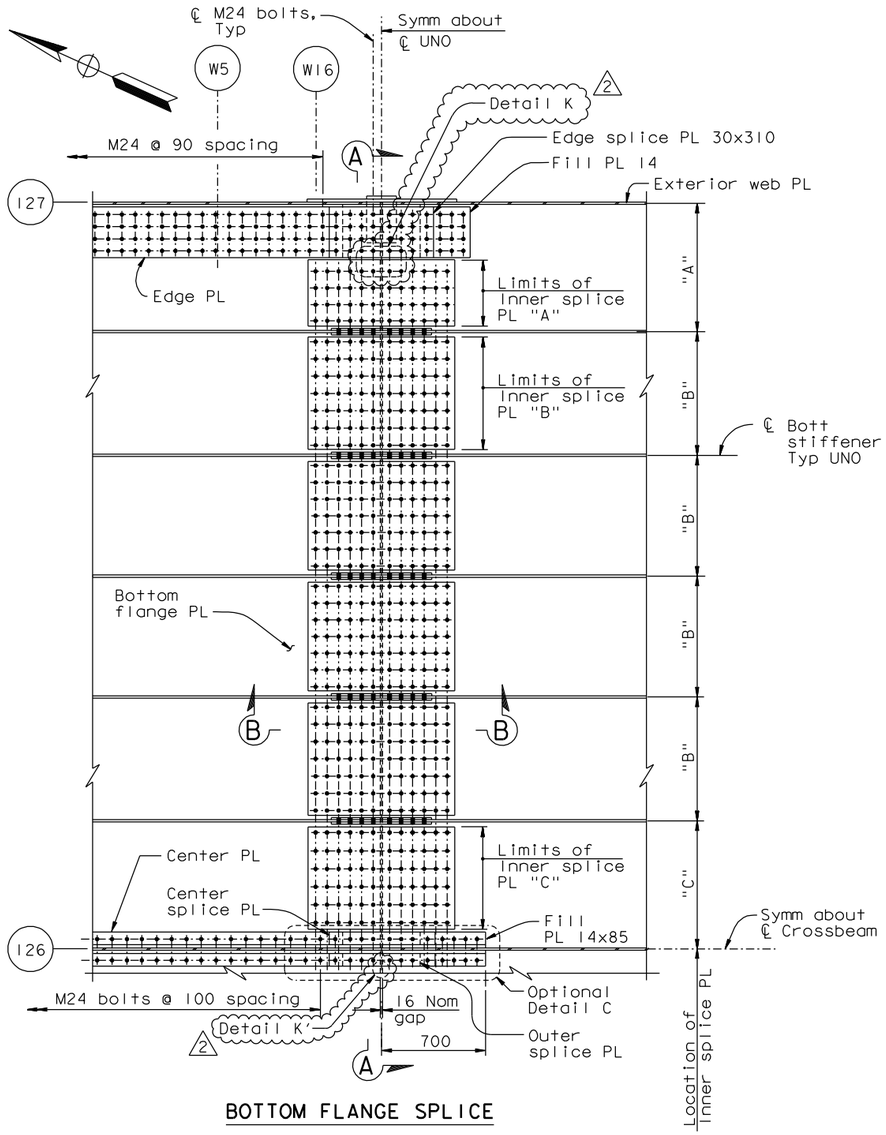

BOTTOM FLANGE SPLICE

DETAIL F

1:20

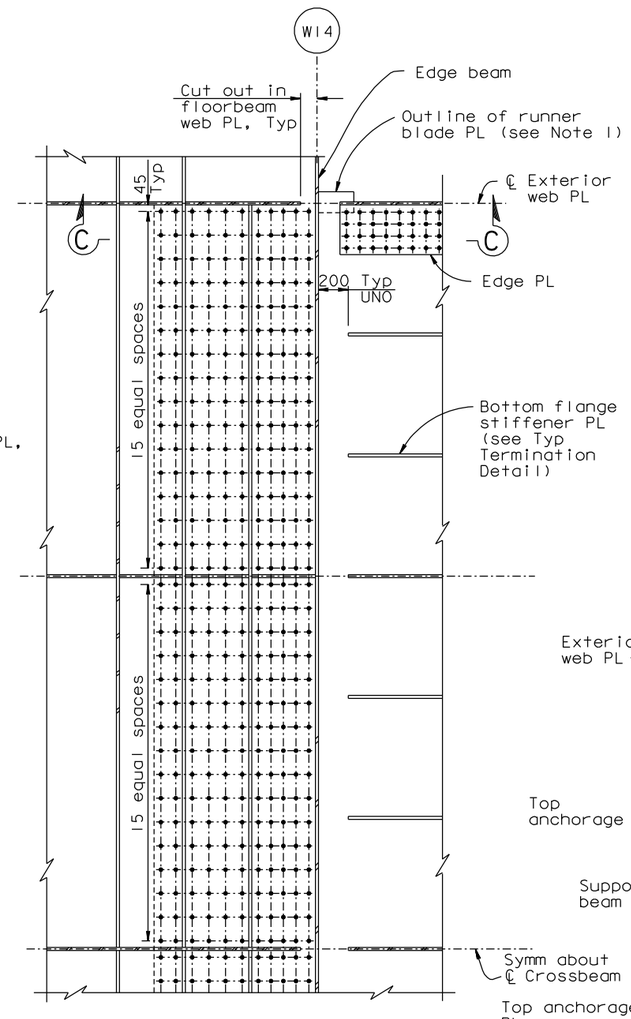

BOTTOM SPLICE TO GIRDER

DETAIL G

1:20

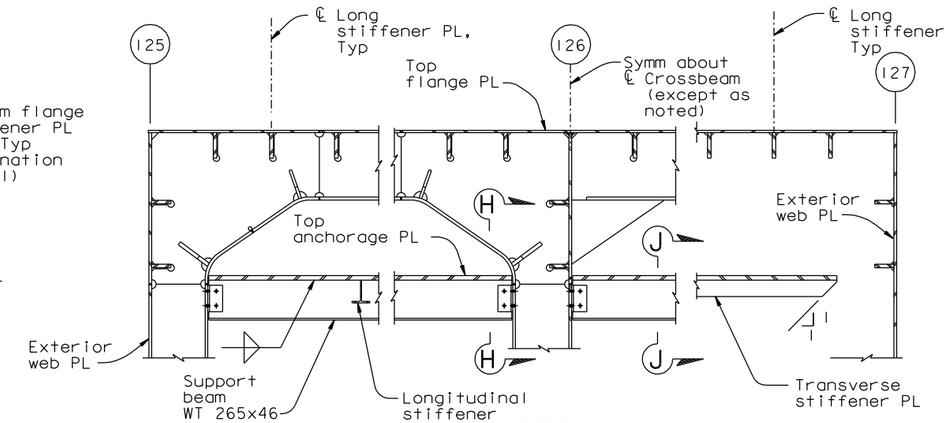

DETAIL A

1:20

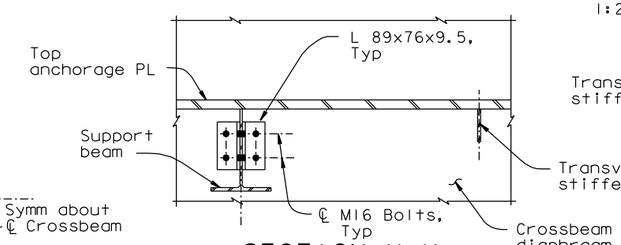

SECTION H-H

1:10

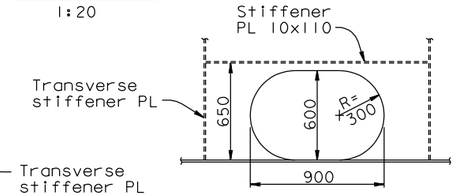

DETAIL B

1:20

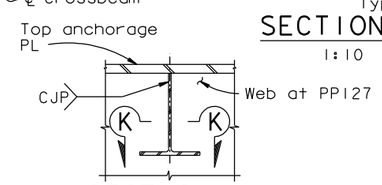

SECTION J-J

1:10

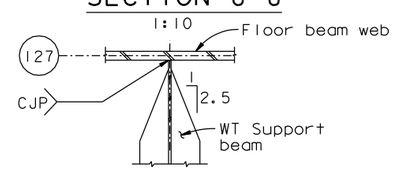

SECTION K-K

1:10

NOTES:

1. For Crossbeam details not shown, see "Typical Crossbeam Details" sheets.
2. For Section A-A, see "Typical Crossbeam Details No. 8" sheet.
3. For Section B-B, see "Crossbeam At Pier E2 No.5" sheet.
4. For Section C-C, see Section A-A on "Crossbeam At Pier E2 No.7" sheet.
5. For optional Detail C, see "Crossbeam At East Anchorage No.4A" sheet.
6. (2) For Details K and K', see "Crossbeam At East Anchorage No.4A" sheet.

BOTTOM FLANGE SPLICE PLATE TABLE	
Plate Type	Dimensions
Inner PL "A"	PL 16x1000x420
Inner PL "B"	PL 16x1000x750
Inner PL "C"	PL 16x1000x690
Outer PL	PL 20x1000x9980

ALL DIMENSIONS ARE IN MILLIMETERS UNLESS OTHERWISE SHOWN

REGISTERED PROFESSIONAL ENGINEER Marwan N. Nader No. C 054426 Exp. 12/31/13 CIVIL STATE OF CALIFORNIA

FOR REVISIONS ONLY

CONTRACT CHANGE ORDER NO. ____
SHEET ____ OF ____

REQUESTS FOR INFORMATION NOT ADDRESSED IN THIS CCO REMAIN IN FORCE

R. Valizadeh/V. Toan/Y.L./W.L./F.C.
DESIGN OVERSIGHT
Roya Valizadeh / Vong Toan / Y Liu
SIGN OFF DATE 04/30/12

MARK	DATE	DESCRIPTIONS	BY	CH'D	CCO#
2	04/30/12	OBG & CROSSBEAM SEALING	DT	MN	244
1	04/18/12	EAST END OBG	MN	GB	87

REVISIONS

	BY	CHECKED
DESIGN	G. Baker	P. Ritchie
DETAILS	S. Camo	T. McMeans
QUANTITIES	C. Mauch	M. Roberts

PREPARED FOR THE STATE OF CALIFORNIA DEPARTMENT OF TRANSPORTATION

R. Manzanarez
PROJECT ENGINEER

BRIDGE NO. 34-0006L/R
KILOMETER POST 13.2/13.9

SAN FRANCISCO OAKLAND BAY BRIDGE
EAST SPAN SEISMIC SAFETY PROJECT
SELF-ANCHORED SUSPENSION BRIDGE
(SUPERSTRUCTURE & TOWER)

CROSSBEAM AT EAST ANCHORAGE NO. 4

Rev. Date: 5-18-98

ORIGINAL SCALE IN MILLIMETERS FOR REDUCED PLANS 0 10 20 30 40 50 60 70 80 90 100

CU 04
EA 0120F1

DISREGARD PRINTS BEARING EARLIER REVISION DATES

REVISION DATES (PRELIMINARY STAGE ONLY) 08/02/99 05/31/01 04/08/02 07/01/02 12/19/02

SHEET 310R2 OF

FILE => I:\bb\04-012001\sas\contract plans and cco\cco\cco#244\1-original 04-30-12\dgn\agcrs19.dgn

USERNAME => DWinrow DATE PLOTTED => 30 APR 2012 TIME PLOTTED => 13:43:45

100 % PS&E

DIST.	COUNTY	ROUTE	KILOMETER POST TOTAL PROJECT	SHEET NO.	TOTAL SHEETS
04	SF	80	13.2/13.9	727SIR1	1204

Caltrans Metric

Daniel J. Turner
REGISTERED ENGINEER - CIVIL
09-01-11
PLANS APPROVAL DATE

REGISTERED PROFESSIONAL ENGINEER Daniel J. Turner No. C 65033 Exp. 06/30/13 CIVIL STATE OF CALIFORNIA

The State of California or its officers or agents shall not be responsible for the accuracy or completeness of electronic copies of this plan sheet.

T.Y. LIN / MOFFATT & NICHOL
825 BATTERY STREET
SAN FRANCISCO, CA 94111

Caltrans now has a web site! To get to the web site, go to: http://www.dot.ca.gov

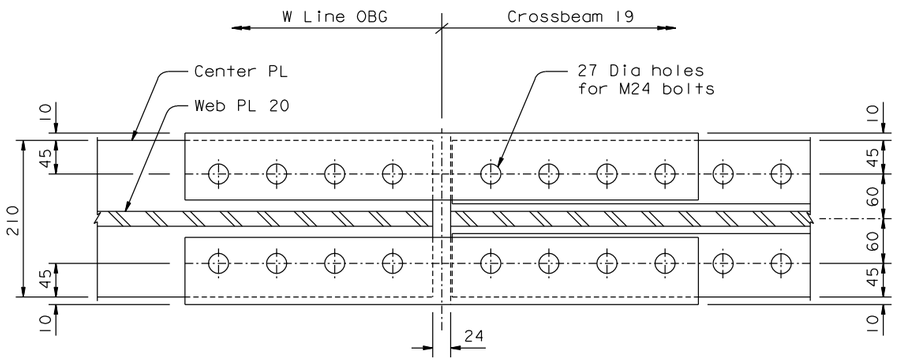

OPTIONAL DETAIL C (See Note 1)
1:4

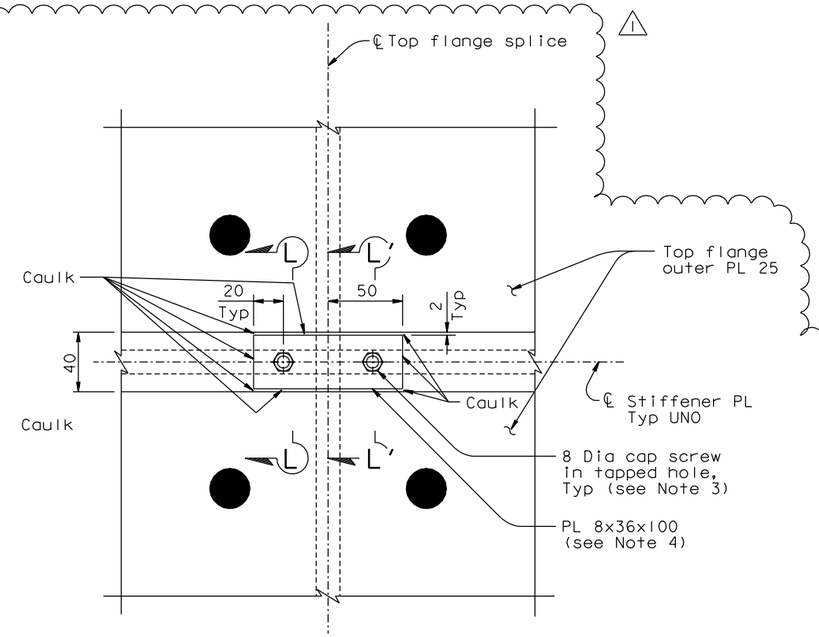

DETAIL H (See Note 2)
1:2

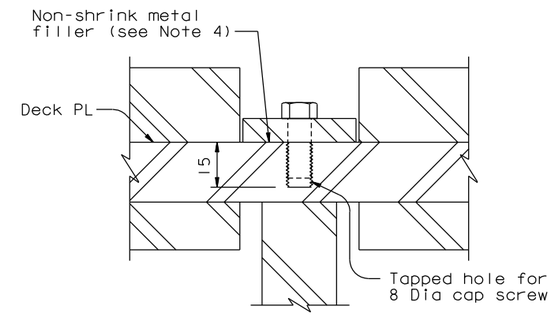

SECTION L-L
1:1
(Section L'-L' Similar)

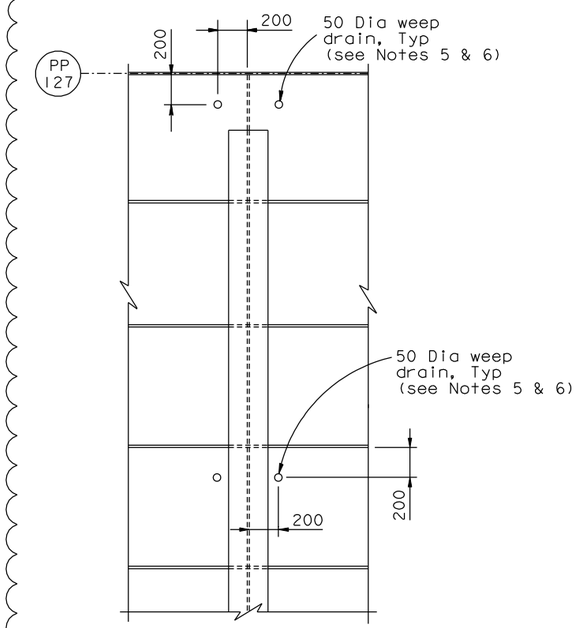

DETAIL J (Detail J' Similar)
1:20

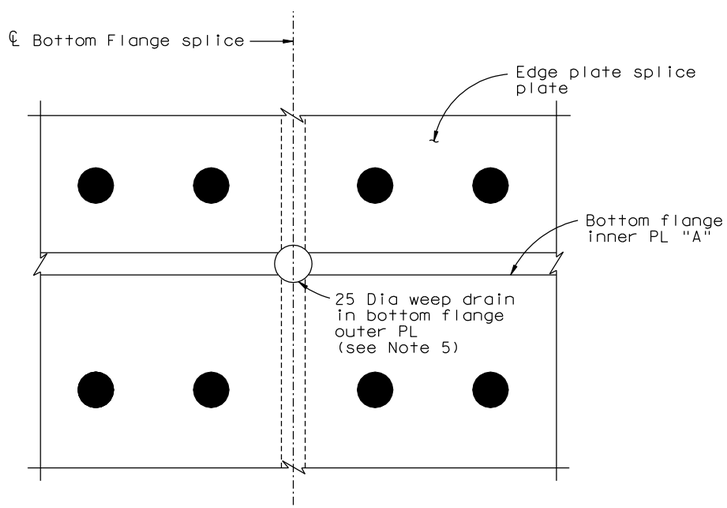

DETAIL K (Detail K' Similar)
1:2

NOTES:

1. At the Contractor's option, optional Detail C may be used to provide additional clearance in the case of Crossbeam to OBG misalignment, subject to review and approval of the Engineer.
2. Detail H is typical for all gaps between top flange exterior splice plates.
3. Cap screws shall have a minimum embedment length of 12 mm in the deck plate and crossbeam top flange plate.
4. Non-shrink metal filler shall be applied to fill gaps and provide a level faying surface for the PL 8.
5. Inside surfaces of weep drains shall be finish painted.
6. 50 Dia weep drains are required at Crossbeam at East Anchorage to "W" Line girder splice only.

100 % PS&E

CONTRACT CHANGE ORDER NO. _____
SHEET ___ OF ___

REQUESTS FOR INFORMATION NOT ADDRESSED IN THIS CCO REMAIN IN FORCE

ALL DIMENSIONS ARE IN MILLIMETERS UNLESS OTHERWISE SHOWN

R. Valizadeh/V. Toan/Y.L./W.L./F.C.
DESIGN OVERSIGHT
Roya Valizadeh / Vong Toan / Y Liu
SIGN OFF DATE 04/30/12

MARK	DATE	DESCRIPTIONS	BY	CH'D	CCO#
1	04/30/12	OBG & CROSSBEAM SEALING	DT	HT	244
0	09/01/11	EAST END OBG	DT	GB	87

REVISIONS

	BY	CHECKED
DESIGN	D. Turner	G. Baker
DETAILS	D. Turner	G. Baker
QUANTITIES	D. Turner	G. Baker

PREPARED FOR THE STATE OF CALIFORNIA DEPARTMENT OF TRANSPORTATION

R. Manzanarez
PROJECT ENGINEER

BRIDGE NO. 34-0006L/R
KILOMETER POST 13.2/13.9

SAN FRANCISCO OAKLAND BAY BRIDGE
EAST SPAN SEISMIC SAFETY PROJECT
SELF-ANCHORED SUSPENSION BRIDGE
(SUPERSTRUCTURE & TOWER)
CROSSBEAM AT EAST ANCHORAGE NO. 4A

Rev. Date: 5-18-98

ORIGINAL SCALE IN MILLIMETERS FOR REDUCED PLANS 0 10 20 30 40 50 60 70 80 90 100

CU 04
EA 0120F1

DISREGARD PRINTS BEARING EARLIER REVISION DATES 09/01/11

REVISION DATES (PRELIMINARY STAGE ONLY)

SHEET 310SIR1 OF

FILE => I:\bb\04-012001\sas\contract plans and cco\cco\cco*244\1-original 04-30-12\dgn\agcrs19a.dgn

USERNAME => DWinrow DATE PLOTTED => 30 APR 2012 TIME PLOTTED => 13:45:01