DIST.	COUNTY	ROUTE	KILOMETER POST TOTAL PROJECT	SHEET NO.	TOTAL SHEETS
04	SF	80	13.2/13.9	890S8R1	1204

REGISTERED ENGINEER - CIVIL

04/06/12
PLANS APPROVAL DATE

REGISTERED PROFESSIONAL ENGINEER James P. Duxbury No. C 64677 Exp. 06/30/13 CIVIL STATE OF CALIFORNIA

The State of California or its officers or agents shall not be responsible for the accuracy or completeness of electronic copies of this plan sheet.

T.Y. LIN / MOFFATT & NICHOL
825 BATTERY STREET
SAN FRANCISCO, CA 94111

Caltrans now has a web site! To get to the web site, go to: http://www.dot.ca.gov

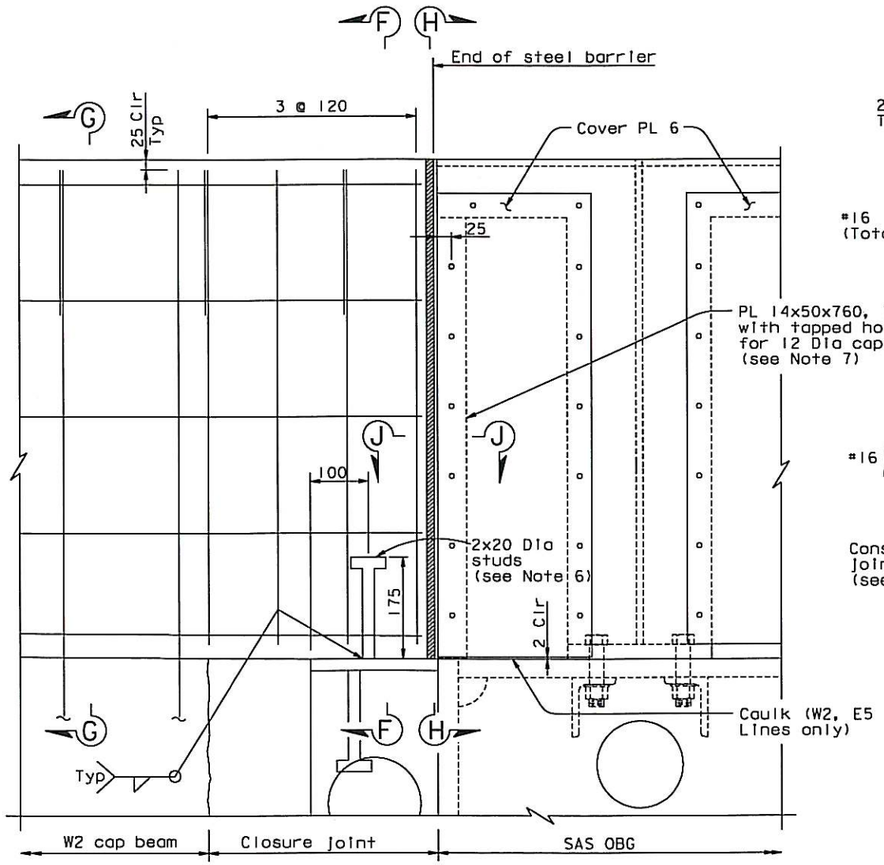

BARRIER AT CLOSURE JOINT (Elevation at Line E2 Barrier Shown, Looking North)
1:5

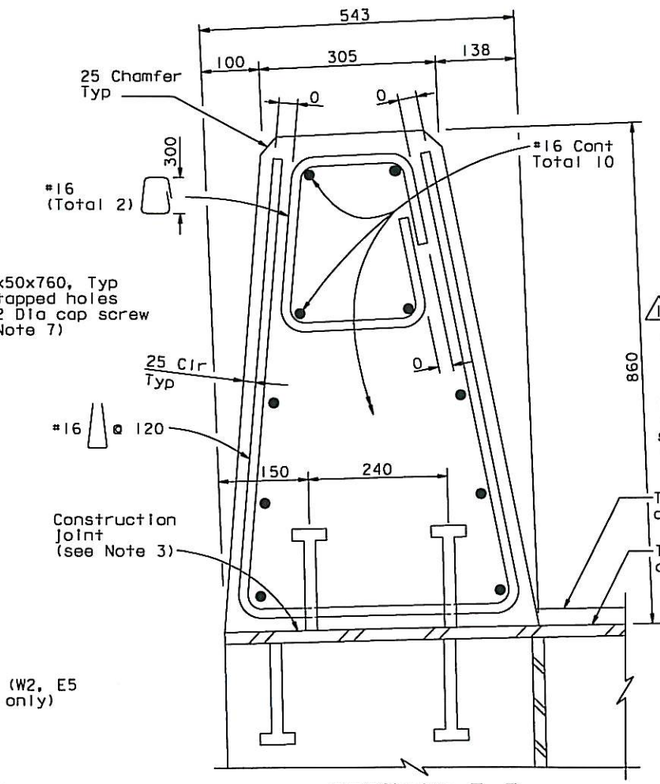

SECTION F-F
1:5

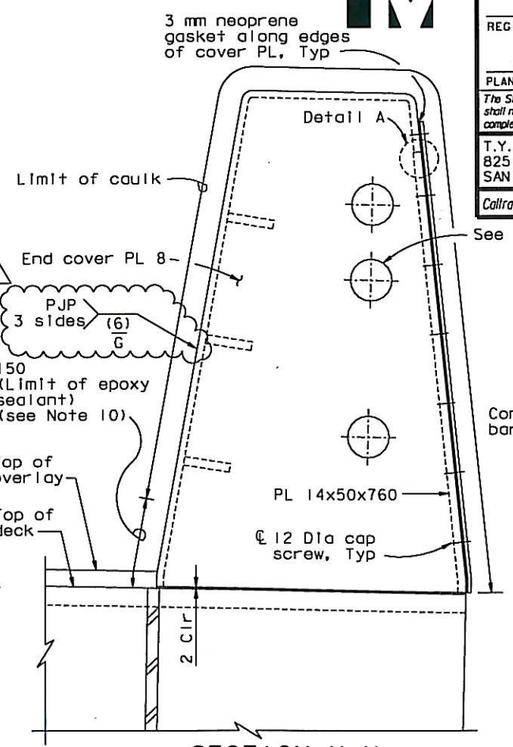

SECTION H-H
1:5
(Caulk and Expanded Polystyrene Not Shown For Clarity)

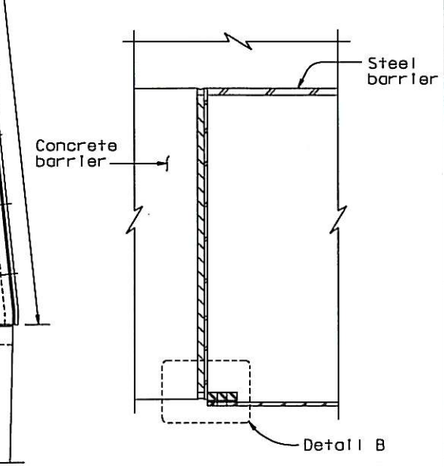

SECTION J-J
1:5

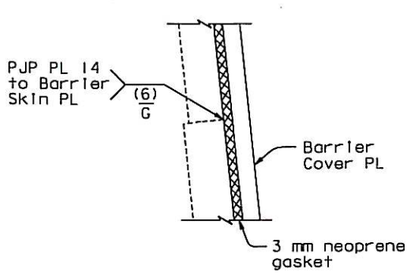

DETAIL A
1:1

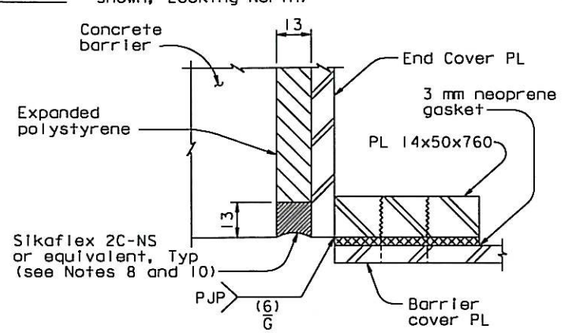

DETAIL B
1:1

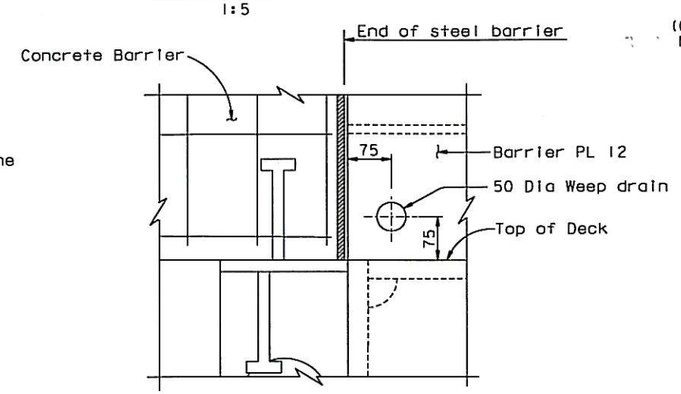

DRAINAGE DETAIL AT LINE E5 BARRIER (Looking North)
1:5

NOTES:

1. For Section G-G, see "Barrier Details No. 3" sheet.
2. Closure joint reinforcement, W2 cap beam reinforcement and PT strands not shown for clarity.
3. The barrier at the closure pour shall be bonded to the closure pour and Top PL 25 using an epoxy adhesive. Closure pour concrete shall be roughened to a minimum amplitude of 5 mm prior to the application of the epoxy adhesive.
4. All reinforcement in barrier shall be epoxy-coated.
5. For utility conduit details, see "Road Plans".
6. Studs shall be ASTM A108.
7. Cap screws shall have a minimum embedment length of 12 mm in the PL 14x50x760.
8. Caulk shall be finished to a concave shape or as otherwise instructed by the manufacturer and approved by the Engineer.
9. Hole diameters and offsets to accommodate utility ducts.
10. Epoxy sealant shall be used in lieu of caulk in the bottom 150 mm of the joint on the roadway side, adjacent to the overlay.

CONTRACT CHANGE ORDER NO. 243 S1
SHEET 2 OF 2

REQUESTS FOR INFORMATION NOT ADDRESSED IN THIS CCO REMAIN IN FORCE

ALL DIMENSIONS ARE IN MILLIMETERS UNLESS OTHERWISE SHOWN

R. Valizadeh/V. Toan/Y. L./W. L./F. C.
DESIGN OVERSIGHT
Roya Valizadeh / Vang P. Toan / Y. Liu
SIGN OFF DATE 04/23/13

MARK	DATE	DESCRIPTIONS	BY	CH'D	CCO#
1	04/23/13	BARRIER AT W2 CLOSURE JOINT	DT	JD	243S1
0	04/06/12	BARRIER AT W2 CLOSURE JOINT	HT	JD	243

REVISIONS

DESIGN	BY H. Tazir	CHECKED J. Duxbury	
DETAILS	BY H. Tazir	CHECKED J. Duxbury	
QUANTITIES	BY H. Tazir	CHECKED J. Duxbury	

PREPARED FOR THE STATE OF CALIFORNIA DEPARTMENT OF TRANSPORTATION

R. Manzanarez
PROJECT ENGINEER

BRIDGE NO. 34-0006L/R
KILOMETER POST 13.2/13.9

SAN FRANCISCO OAKLAND BAY BRIDGE
EAST SPAN SEISMIC SAFETY PROJECT
SELF-ANCHORED SUSPENSION BRIDGE
(SUPERSTRUCTURE & TOWER)

BARRIER DETAILS NO. 2H

Rev. Date: 5-18-98

ORIGINAL SCALE IN MILLIMETERS FOR REDUCED PLANS 0 10 20 30 40 50 60 70 80 90 100

CU 04
EA 0120F1

DISREGARD PRINTS BEARING EARLIER REVISION DATES 04/06/12

REVISION DATES (PRELIMINARY STAGE ONLY)

SHEET 473S8R1 OF

FILE => L:\BB\04-012001\SAS\Contract Plans and CCO\CCO\CCO#243S1\1-Original 04-23-13\DGN\akbar03h.dgn

100 % PS&E

USERNAME => DWinrow DATE PLOTTED => 22 APR 2013 TIME PLOTTED => 17:31:41