DIST	COUNTY	ROUTE	KILOMETER POST TOTAL PROJECT	SHEET No	TOTAL SHEETS
04	SF	80	13.2/13.9	864S4R2	1204

REGISTERED CIVIL ENGINEER DATE

07-30-10
PLANS APPROVAL DATE

REGISTERED PROFESSIONAL ENGINEER Enrico G. Maggenti No. 46920 Exp. 6/30/13 CIVIL STATE OF CALIFORNIA

The State of California or its officers or agents shall not be responsible for the accuracy or completeness of electronic copies of this plan sheet.

Caltrans now has a web site! To get to the web site, go to: http://www.dot.ca.gov

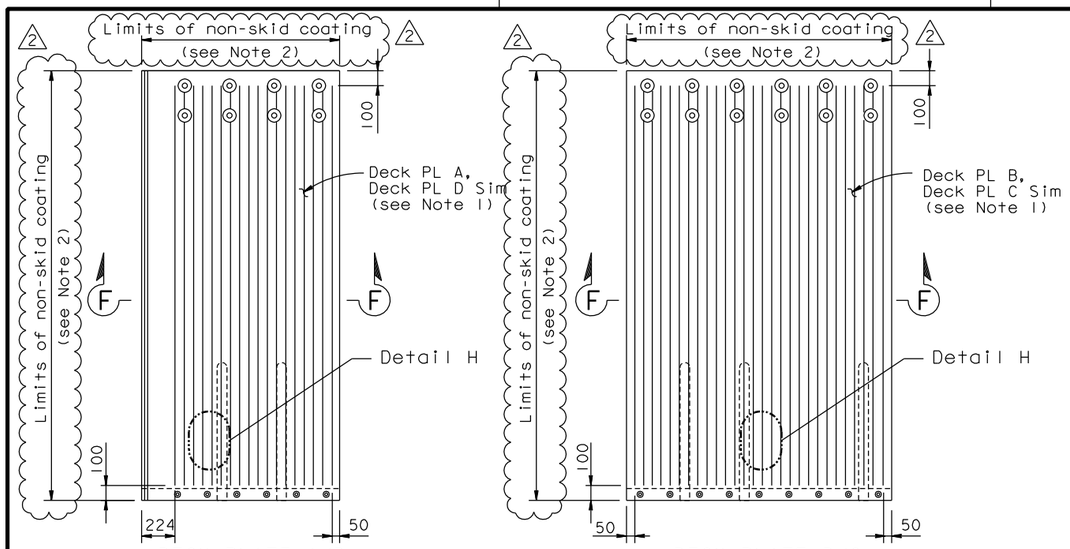

DECK PLATE A/D
(Deck PL A Shown, Deck PL D Similar)

DECK PLATE B/C
(Deck PL B Shown, Deck PL C Similar)

FRICTION PATTERN (See Note 2)
1:20

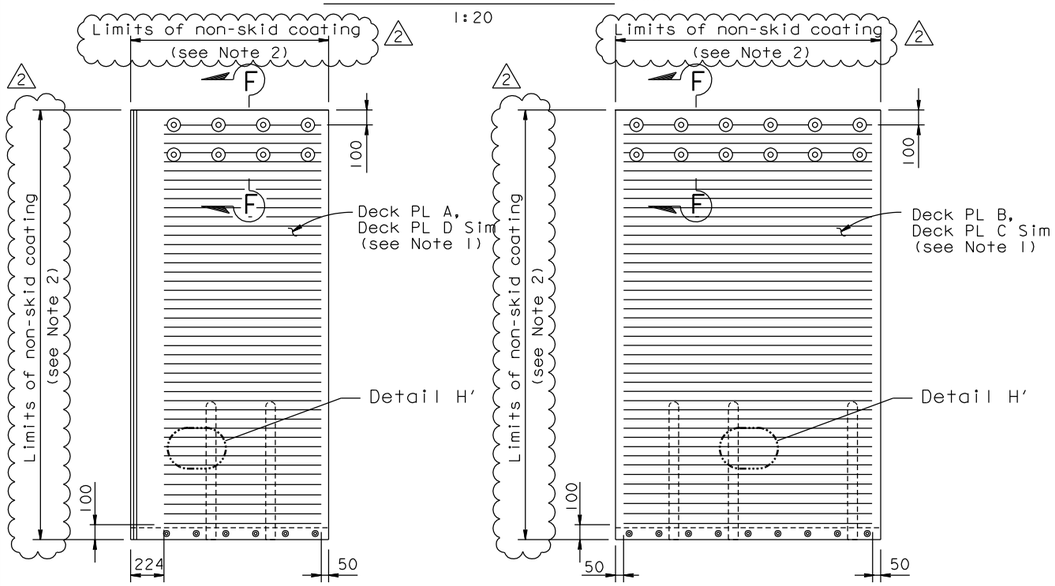

DECK PLATE A/D
(Deck PL A Shown, Deck PL D Similar)

DECK PLATE B/C
(Deck PL B Shown, Deck PL C Similar)

ALT FRICTION PATTERN (See Note 2)
1:20

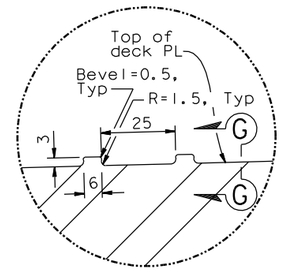

DETAIL G
1:1

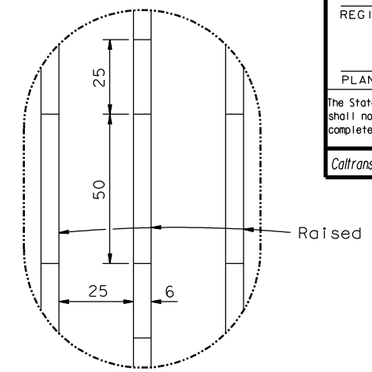

DETAIL H
1:1

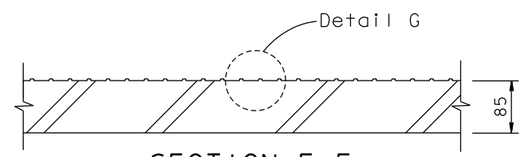

SECTION F-F
1:5

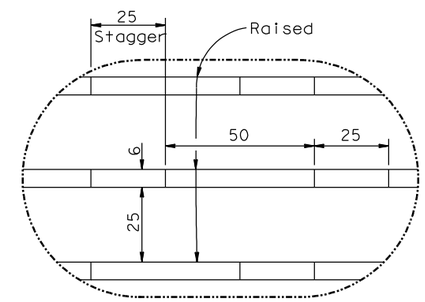

DETAIL H'
1:1

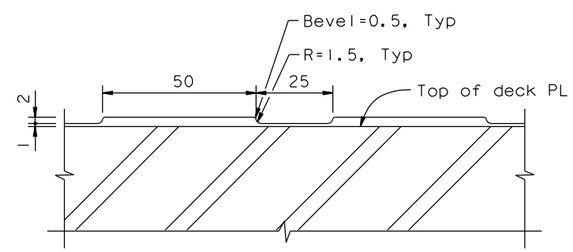

SECTION G-G
1:1

NOTES:

1. For Details not shown, see "Hinge A Expansion Joint Details No.5" sheet.
2. Friction pattern type shall be selected as directed by the Engineer. Polymer/Aggregate Skid Coat (PASC) may be applied per Engineer's direction.

CONTRACT CHANGE ORDER NO. ____
SHEET ___ OF ___

REQUESTS FOR INFORMATION NOT ADDRESSED IN THIS CCO REMAIN IN FORCE

MARK	DATE	DESCRIPTIONS	BY	CH'D	CCO#
2	06/13/12	HINGE PLATE NON-SKID	RM	AA	241
1	12/30/10	SEISMIC JOINT MODIFICATIONS HINGE A	RM	AA	25
0	07/30/10	SEISMIC JOINT MODIFICATIONS HINGE A	RM	AA	25

REVISIONS

	BY	CHECKED
DESIGN	R MAGGENTI	A AKINSANYA
DETAILS	R MAGGENTI	A AKINSANYA
QUANTITIES	R MAGGENTI	A AKINSANYA

STATE OF CALIFORNIA
DEPARTMENT OF TRANSPORTATION

DIVISION OF ENGINEERING SERVICES
STRUCTURE DESIGN
SPECIAL DESIGNS BRANCH

BRIDGE NO. 34-0006 L/R
KILOMETER POST 13.2/13.9

SAN FRANCISCO OAKLAND BAY BRIDGE
EAST SPAN SEISMIC SAFETY PROJECT
SELF-ANCHORED SUSPENSION BRIDGE
(SUPERSTRUCTURE & TOWER)

SEISMIC JOINT (HINGE A)

HINGE A EXPANSION JOINT DETAILS NO. 6

Caltrans Metric

ALL DIMENSIONS ARE IN MILLIMETERS UNLESS OTHERWISE SHOWN

ORIGINAL SCALE IN MILLIMETERS FOR REDUCED PLANS 0 10 20 30 40 50 60 70 80 90 100

CU 04
EA 0120F1

DISREGARD PRINTS BEARING EARLIER REVISION DATES 07/30/10

REVISION DATES

SHEET 447S4R2 OF

FILE => spec_des_br_proj/04-0120F1/L:\BB\04-012001\SAS\Contract Plans and CCO\CCO\CCO#241\1-Original 06-13-12\DGN\akjnt01d.dgn

USERNAME => DWinrow DATE PLOTTED => 12 JUN 2012 TIME PLOTTED => 15:42:07

DIST	COUNTY	ROUTE	KILOMETER POST TOTAL PROJECT	SHEET No	TOTAL SHEETS
04	SF	80	13.2/13.9	864511R2	1204

REGISTERED CIVIL ENGINEER DATE

10-22-10
PLANS APPROVAL DATE

REGISTERED PROFESSIONAL ENGINEER
Enrico G. Maggenti
No. 46920
Exp. 6/30/13
CIVIL
STATE OF CALIFORNIA

The State of California or its officers or agents shall not be responsible for the accuracy or completeness of electronic copies of this plan sheet.

Caltrans now has a web site! To get to the web site, go to: http://www.dot.ca.gov

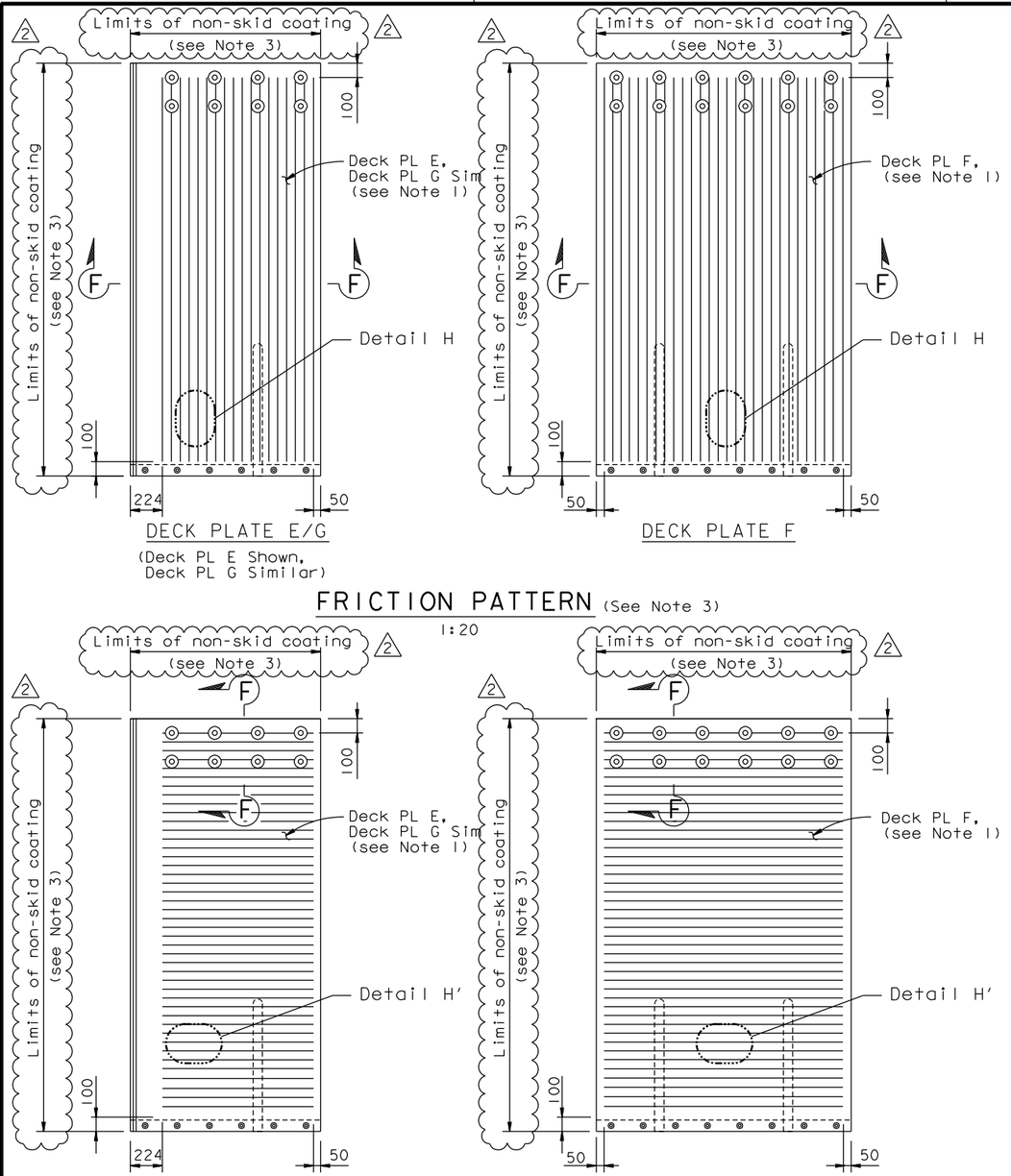

FRICTION PATTERN (See Note 3)
1:20

ALT FRICTION PATTERN (See Note 3)
1:20

NOTES:

1. For Details not shown, see "Hinge A Expansion Joint Details No.12" sheet.
2. For Section F-F, Detail H and Detail H', see "Hinge A Expansion Joint Details No.6" sheet.
3. Friction pattern type shall be selected as directed by the Engineer. Polymer/Aggregate Skid Coat (PASC) may be applied per Engineer's direction.

CONTRACT CHANGE ORDER NO. ____
SHEET ___ OF ___

REQUESTS FOR INFORMATION NOT ADDRESSED IN THIS CCO REMAIN IN FORCE

MARK	DATE	DESCRIPTIONS	BY	CH'D	CCO#
2	06/13/12	HINGE PLATE NON-SKID	RM	AA	241
1	12/30/10	SEISMIC JOINT MODIFICATIONS HINGE A	RM	AA	25
0	10/22/10	SEISMIC JOINT MODIFICATIONS HINGE A	RM	AA	25

REVISIONS

	BY	CHECKED
DESIGN	R MAGGENTI	A AKINSANYA
DETAILS	R MAGGENTI	A AKINSANYA
QUANTITIES	R MAGGENTI	A AKINSANYA

STATE OF CALIFORNIA
DEPARTMENT OF TRANSPORTATION

DIVISION OF ENGINEERING SERVICES
STRUCTURE DESIGN
SPECIAL DESIGNS BRANCH

BRIDGE NO. 34-0006 L/R
KILOMETER POST 13.2/13.9

SAN FRANCISCO OAKLAND BAY BRIDGE
EAST SPAN SEISMIC SAFETY PROJECT

SELF-ANCHORED SUSPENSION BRIDGE
(SUPERSTRUCTURE & TOWER)

SEISMIC JOINT (HINGE A)

HINGE A EXPANSION JOINT DETAILS NO. 13

Caltrans Metric

ALL DIMENSIONS ARE IN MILLIMETERS UNLESS OTHERWISE SHOWN

ORIGINAL SCALE IN MILLIMETERS FOR REDUCED PLANS 0 10 20 30 40 50 60 70 80 90 100

CU 04
EA 0120F1

DISREGARD PRINTS BEARING EARLIER REVISION DATES 07/30/10

REVISION DATES

SHEET 447 OF 511R2

FILE => spec_des_br_proj/04-0120F1/1:\bb\04-012001\sas\contract plans and cco\cco\cco#241\1-original 06-13-12\dgn\akjnt011.dgn

USERNAME => DWinrow DATE PLOTTED => 12 JUN 2012 TIME PLOTTED => 15:53:03

DIST.	COUNTY	ROUTE	KILOMETER POST TOTAL PROJECT	SHEET NO.	TOTAL SHEETS
04	SF	80/SAS	13.2/13.9	1166S23R1	1204
		80/YBITS	12.7/13.2	K700A	806

REGISTERED ENGINEER - CIVIL

01-20-12
PLANS APPROVAL DATE

REGISTERED PROFESSIONAL ENGINEER Enrico G. Maggenti No. 46920 Exp. 6/30/13 CIVIL STATE OF CALIFORNIA

The State of California or its officers or agents shall not be responsible for the accuracy or completeness of electronic copies of this plan sheet.

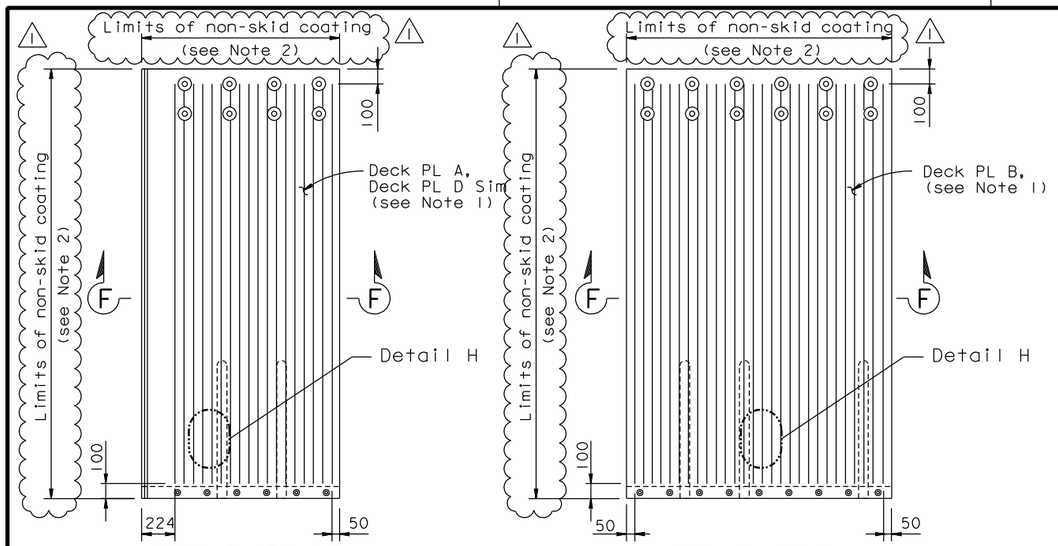

DECK PLATE A/D

(Deck PL A Shown, Deck PL D Similar)

DECK PLATE B

FRICTION PATTERN (See Note 2)

1:20

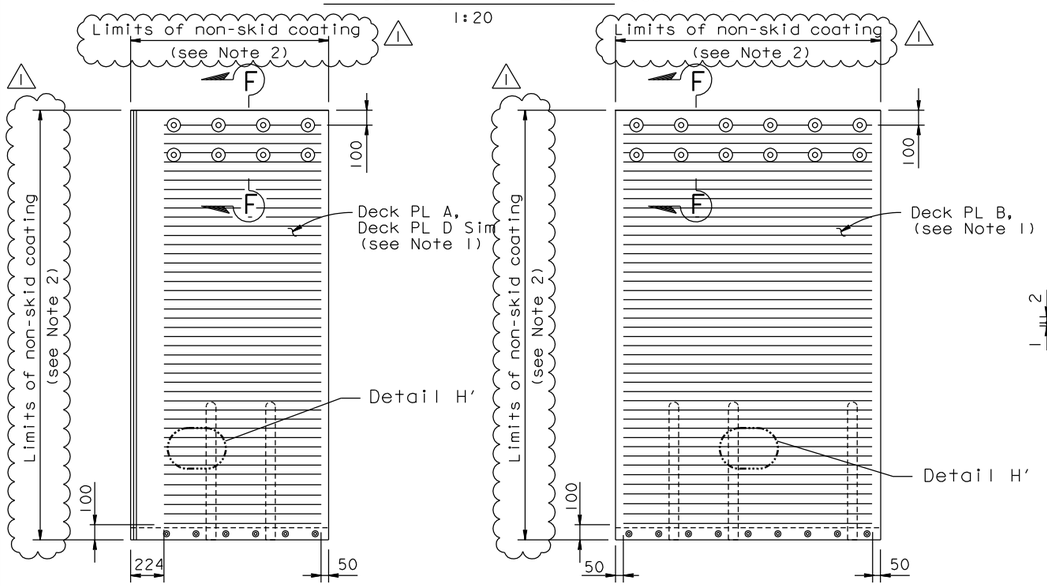

DECK PLATE A/D

(Deck PL A Shown, Deck PL D Similar)

DECK PLATE B

ALT FRICTION PATTERN (See Note 2)

1:20

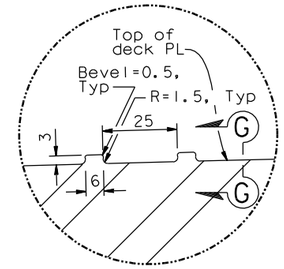

DETAIL G

1:1

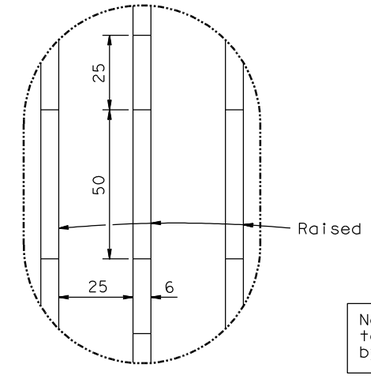

DETAIL H

1:1

Note: Hinge KE & KW Expansion Joints to be furnished by others and installed by the Contractor.

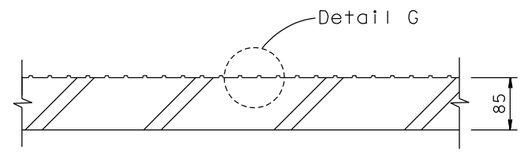

SECTION F-F

1:5

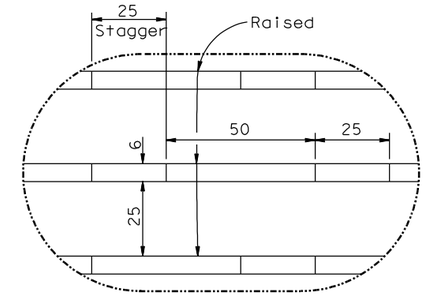

DETAIL H'

1:1

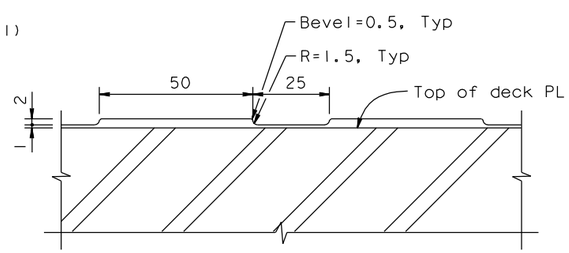

SECTION G-G

1:1

NOTES:

1. For Details not shown, see "Hinge KE & KW Expansion Joint Details No.3" sheet.
2. Friction pattern type shall be selected as directed by the Engineer. Polymer/Aggregate Skid Coat (PASC) may be applied per Engineer's direction.

CONTRACT CHANGE ORDER NO. _____
SHEET ____ OF ____

REQUESTS FOR INFORMATION NOT ADDRESSED IN THIS CCO REMAIN IN FORCE

MARK	DATE	DESCRIPTIONS	BY	CH'D	CCO#
1	06/13/12	HINGE PLATE NON-SKID	RM	MW	241
0	01/20/12	YBI CLOSURE POUR	RM	MW	216

REVISIONS

Caltrans Metric

ALL DIMENSIONS ARE IN MILLIMETERS UNLESS OTHERWISE SHOWN

ORIGINAL SCALE IN MILLIMETERS FOR REDUCED PLANS 0 10 20 30 40 50 60 70 80 90 100

	BY	CHECKED
DESIGN	R MAGGENTI	M WHITESIDE
DETAILS	R MAGGENTI	M WHITESIDE
QUANTITIES	R MAGGENTI	M WHITESIDE

STATE OF CALIFORNIA
DEPARTMENT OF TRANSPORTATION

DIVISION OF ENGINEERING SERVICES
STRUCTURE DESIGN
SPECIAL DESIGNS BRANCH

BRIDGE NO. 34-0006 L/R
KILOMETER POST 12.8

CU 04
EA 0120F1

DISREGARD PRINTS BEARING EARLIER REVISION DATES

REVISION DATES

SHEET K151A OF 209

SAN FRANCISCO OAKLAND BAY BRIDGE
EAST SPAN SEISMIC SAFETY PROJECT

YBI TRANSITION STRUCTURES - HINGE K

SEISMIC JOINT (TYPE II)

HINGE KE & KW EXPANSION JOINT DETAILS NO.4

Jan 6, 2012

USERNAME => DWinrow DATE PLOTTED => 12 JUN 2012 TIME PLOTTED => 16:05:24

FILE => spec_des_br_proj/04-0120S1/2007sd/1:\bb\04-012001\sas\contract plans and cco\cco\cco#241\1-original 06-13-12\dgn\ybits-n-hngexpjt04.dgn