DIST.	COUNTY	ROUTE	KILOMETER POST TOTAL PROJECT	SHEET NO.	TOTAL SHEETS
04	SF	80	13.2/13.9	1164S8R2	1204

REGISTERED ENGINEER - CIVIL

04-15-11
PLANS APPROVAL DATE

REGISTERED PROFESSIONAL ENGINEER Alex E. Sanjines No. C 051153 Exp. 9/30/13 CIVIL STATE OF CALIFORNIA

The State of California or its officers or agents shall not be responsible for the accuracy or completeness of electronic copies of this plan sheet.

T.Y. LIN / MOFFATT & NICHOL
825 BATTERY STREET
SAN FRANCISCO, CA 94111

Caltrans now has a web site! To get to the web site, go to: http://www.dot.ca.gov

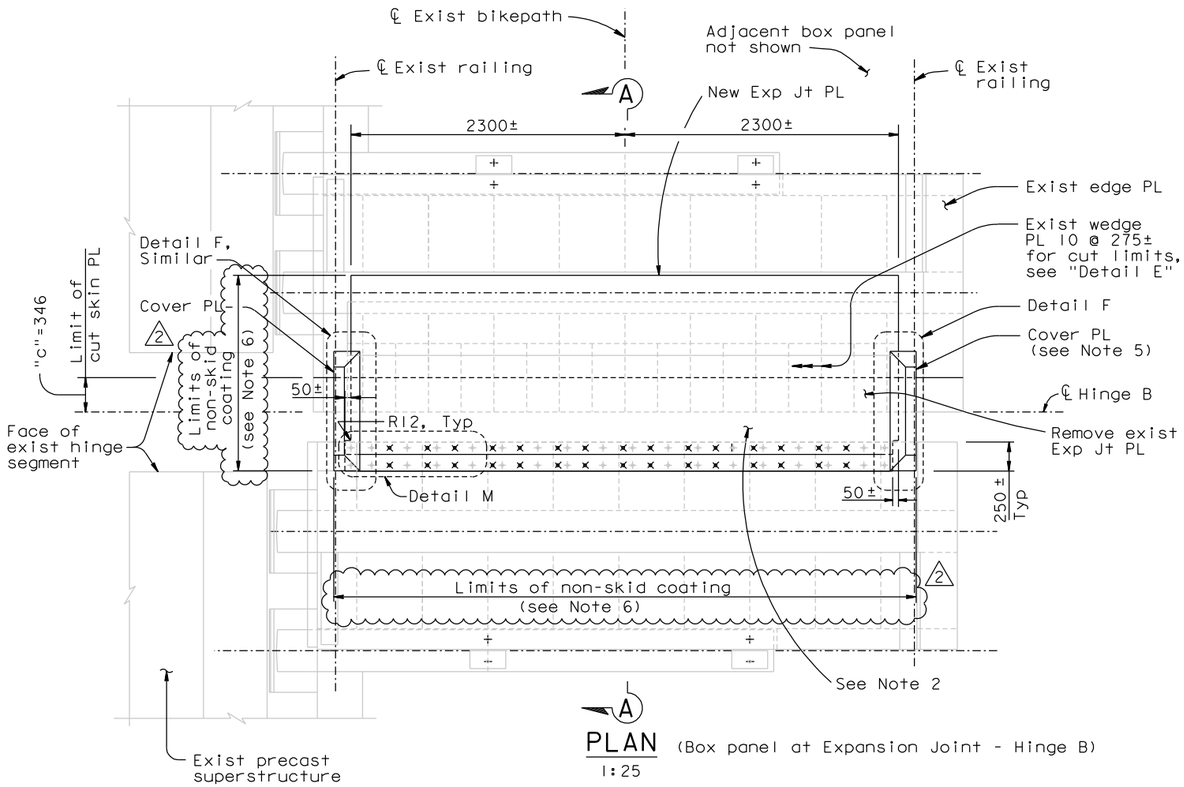

PLAN (Box panel at Expansion Joint - Hinge B)
1:25

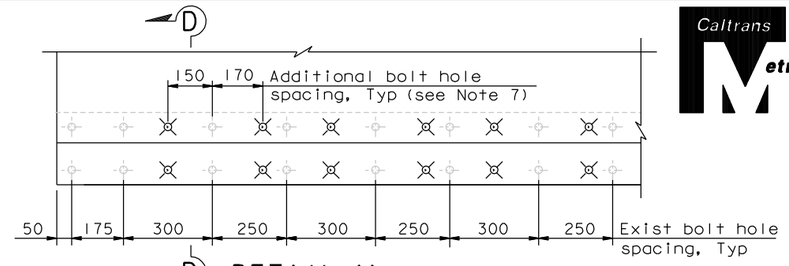

DETAIL M (Cover PL not shown for clarity)
1:10

LEGEND:

- Existing bolt holes
- Additional bolt holes

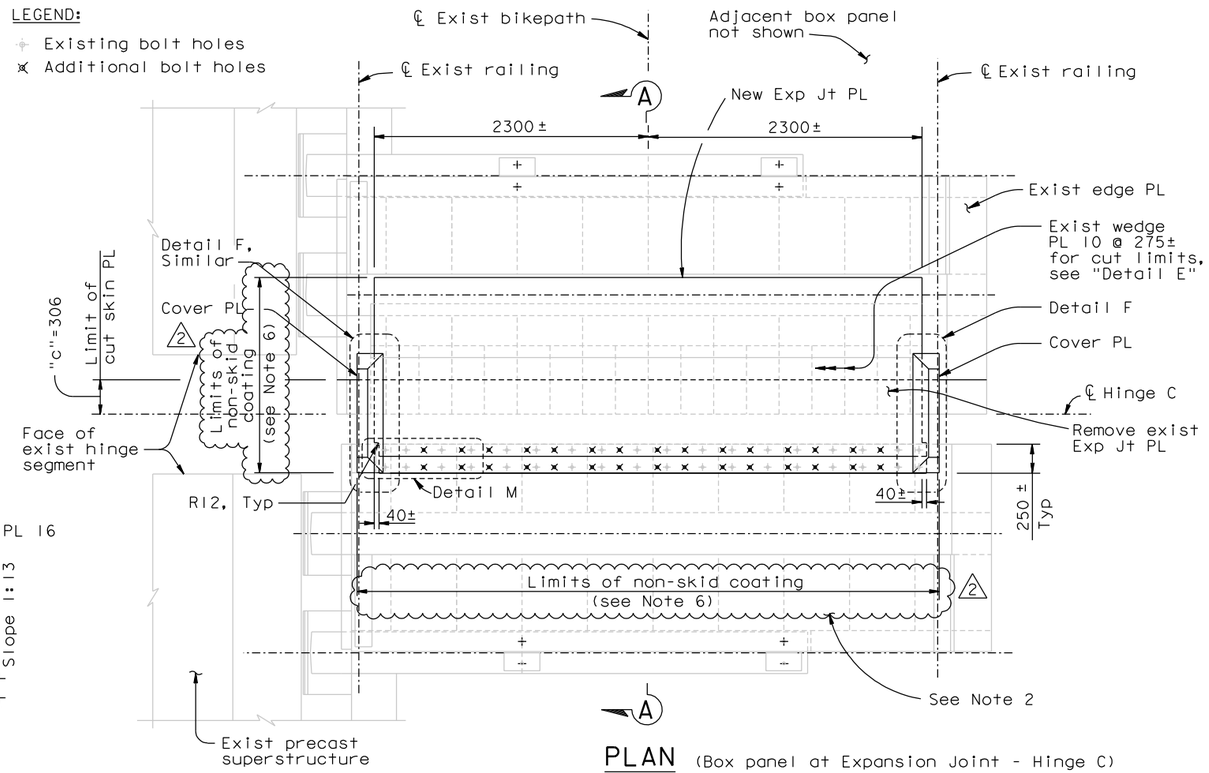

PLAN (Box panel at Expansion Joint - Hinge C)
1:25

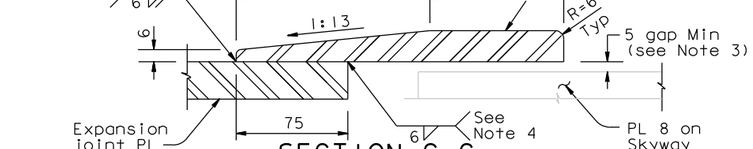

SECTION C-C
1:2

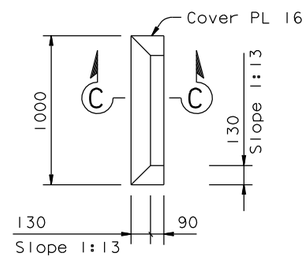

DETAIL F
1:20

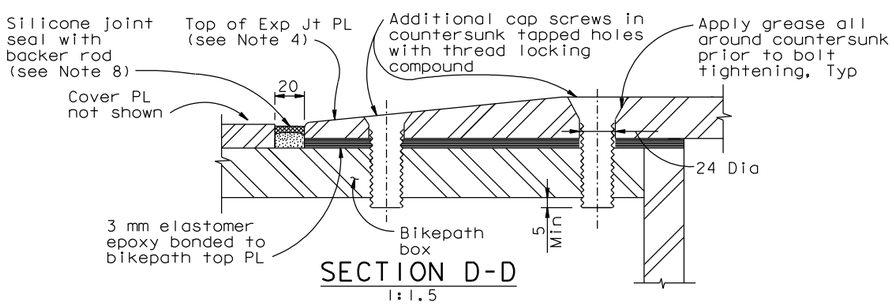

SECTION D-D
1:1.5

4. Terminate the weld 12 mm short of the expansion joint PL taper at the bolted end. Caulk the space between the cover PL and the expansion joint PL at the tapered end of the expansion joint PL. At the Contractor's option, the weld between expansion joint PL and cover PL may be field weld.
5. Trim the cover PL as necessary to clear the expansion joint PL bolted connection.
6. Top surface of the exposed plates shall have non-skid coating.
7. Tap holes in existing top PL of bikepath panel at every other bolt (Total 66 bolts).
8. Top of silicone joint seal shall be no more than 6 mm lower than top of Expansion Joint plate.

NOTES:

1. For Section A-A, see "Skyway Bikepath Expansion Joint Replacement No.1" sheet.
2. For details not shown, see Plan (Box panel at Expansion Joint - Hinge D) on "Skyway Bikepath Expansion Joint Replacement No.1" sheet.
3. Cover PL may be shimmed to maintain Min gap shown.

CONTRACT CHANGE ORDER NO. _____
SHEET ____ OF ____

REQUESTS FOR INFORMATION NOT ADDRESSED IN THIS CCO REMAIN IN FORCE

MARK	DATE	DESCRIPTIONS	BY	CH'D	CCO#
2	06/13/12	HINGE PLATE NON-SKID	JD	AS	241
1	03/13/12	SKYWAY BIKEPATH HINGE	CC	AS	217S1
0	04/15/11	SKYWAY BIKEPATH EXPANSION JOINT	AS	HP	193

REVISIONS

R. Valizadeh/V. Toan/Y.L./W.L./F.C.
DESIGN OVERSIGHT
SIGN OFF DATE 06/13/12

	BY	CHECKED
DESIGN	A. Sanjines	H. Patel
DETAILS	A. Sanjines	H. Patel
QUANTITIES	A. Sanjines	H. Patel

PREPARED FOR THE STATE OF CALIFORNIA DEPARTMENT OF TRANSPORTATION

R. Manzanarez
PROJECT ENGINEER

ALL DIMENSIONS ARE IN MILLIMETERS UNLESS OTHERWISE SHOWN

BRIDGE NO. 34-0006L/R
KILOMETER POST 13.2/13.9

SAN FRANCISCO OAKLAND BAY BRIDGE
EAST SPAN SEISMIC SAFETY PROJECT
SELF-ANCHORED SUSPENSION BRIDGE (SUPERSTRUCTURE & TOWER)

SKYWAY BIKEPATH EXPANSION JOINT REPLACEMENT NO.2

Rev. Date: 5-18-98

ORIGINAL SCALE IN MILLIMETERS FOR REDUCED PLANS 0 10 20 30 40 50 60 70 80 90 100

CU 04
EA 0120F1

DISREGARD PRINTS BEARING EARLIER REVISION DATES 04/15/11

REVISION DATES (PRELIMINARY STAGE ONLY)

SHEET 747S8R2 OF

FILE => I:\bb\04-012001\sas\contract plans and cco\cco\cco#241\1-original 06-13-12\dgn\sbjnt02.dgn

USERNAME => DWinrow DATE PLOTTED => 12 JUN 2012 TIME PLOTTED => 16:00:40

100% PS&E