DIST.	COUNTY	ROUTE	KILOMETER POST TOTAL PROJECT	SHEET NO.	TOTAL SHEETS
04	SF	80/SAS	13.2/13.9	1166S11R1	1204
		80/YBITS	12.7/13.2	K673AA	806

Caltrans Metric

REGISTERED ENGINEER - CIVIL

01-20-12
PLANS APPROVAL DATE

REGISTERED PROFESSIONAL ENGINEER A.L. ELY No. 18880 Exp. 6-30-13 CIVIL STATE OF CALIFORNIA

The State of California or its officers or agents shall not be responsible for the accuracy or completeness of electronic copies of this plan sheet.

T.Y. LIN / MOFFATT & NICHOL
TWO HARRISON STREET
SAN FRANCISCO, CA 94105

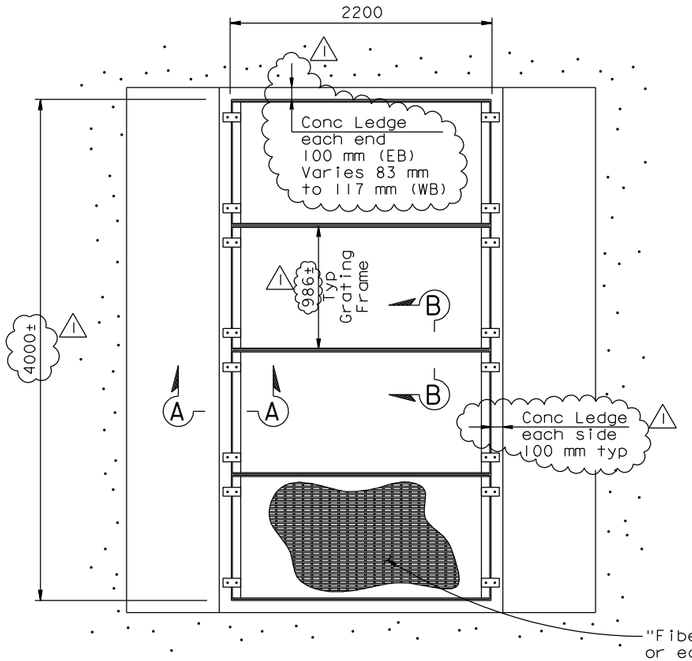

PLAN AT SOFFIT OPENING
1:25

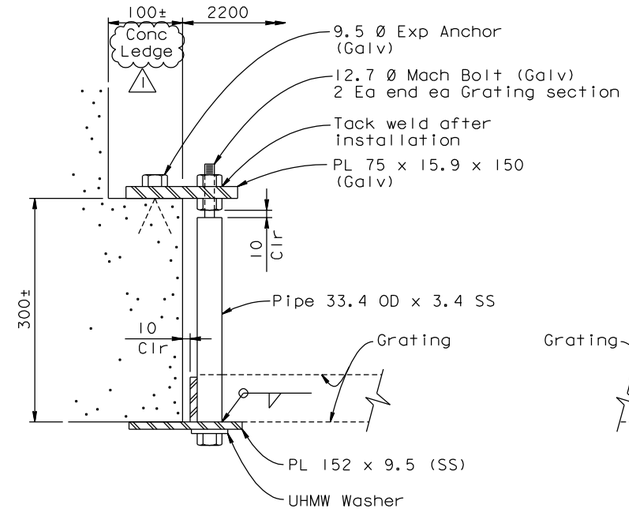

SECTION A-A
1:4

Grating Design (Service) Loads:

Live Load - 4788 Pa
Wind (Uplift) - 3830 Pa

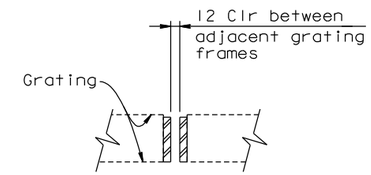

SECTION B-B
1:4

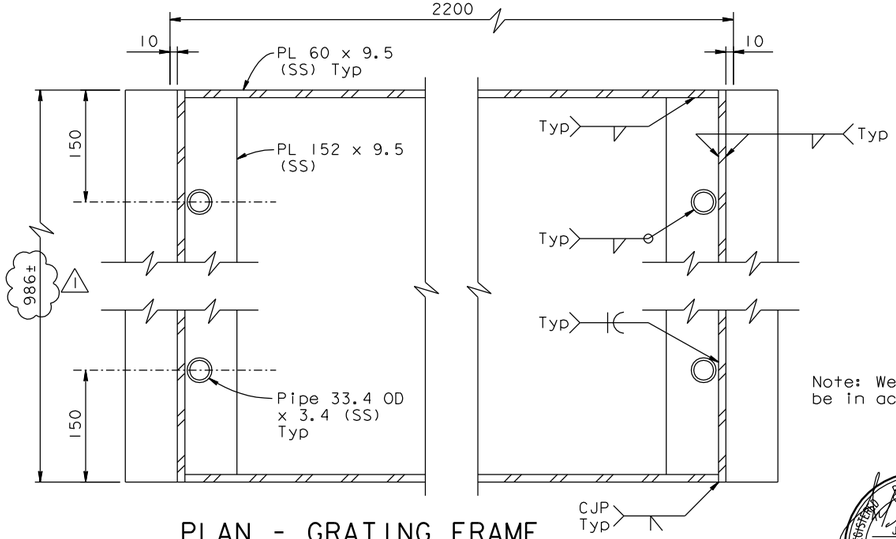

PLAN - GRATING FRAME
1:4

Note: Welding to stainless steel shall be in accordance with AWS D1.6-1999.

REGISTERED PROFESSIONAL ENGINEER JAL BIRDY No. 41547 Exp. 12-31-13 CIVIL STATE OF CALIFORNIA

FOR REVISION 1 ONLY

SUPPLEMENTAL SHEET
CONTRACT CHANGE ORDER NO. _____
SHEET ____ OF ____

REQUESTS FOR INFORMATION NOT ADDRESSED IN THIS CCO REMAIN IN FORCE

ALL DIMENSIONS ARE IN MILLIMETERS UNLESS OTHERWISE SHOWN

MARK	DATE	DESCRIPTIONS	BY	CH'D	CCO#
1	09/24/12	HINGE PLATE COVERS AND COATING	JB	AT	241
0	01/20/12	YBI CLOSURE POUR	TL	JB	216

REVISIONS

DESIGN OVERSIGHT ADE AKINSANYA
SIGN OFF DATE
Rev. Date: 5-18-98

	BY	CHECKED
DESIGN	Lee	Birdy
DETAILS	Samson	Ely
QUANTITIES	Fellows	Birdy

PREPARED FOR THE STATE OF CALIFORNIA DEPARTMENT OF TRANSPORTATION

Jal Birdy
PROJECT ENGINEER

BRIDGE NO. 34-0006 L/R
KILOMETER POST 12.8

SAN FRANCISCO OAKLAND BAY BRIDGE
EAST SPAN SEISMIC SAFETY PROJECT

YBI TRANSITION STRUCTURES - HINGE K

HINGE K CLOSURE DETAILS NO. 7A

ORIGINAL SCALE IN MILLIMETERS FOR REDUCED PLANS 0 10 20 30 40 50 60 70 80 90 100

CU 04
EA 0120F1

DISREGARD PRINTS BEARING EARLIER REVISION DATES

REVISION DATES (PRELIMINARY STAGE ONLY)

SHEET K124AA OF 209

FILE => L:\BB\04-012001\SAS\Contract Plans and CCO\CCO\CCO#241\3-Update 09-24-12\DGN\ybits-n-hingedt07a.dgn

Sept 19, 2012

USERNAME => DWinrow DATE PLOTTED => 24 SEP 2012 TIME PLOTTED => 14:10:55