DIST.	COUNTY	ROUTE	KILOMETER POST TOTAL PROJECT	SHEET NO.	TOTAL SHEETS
04	SF	80	13.2/13.9	769S1	1204

Caltrans Metric

REGISTERED ENGINEER - CIVIL

XX-XX-12

PLANS APPROVAL DATE

REGISTERED PROFESSIONAL ENGINEER No. Exp. CIVIL STATE OF CALIFORNIA

The State of California or its officers or agents shall not be responsible for the accuracy or completeness of electronic copies of this plan sheet.

T.Y. LIN / MOFFATT & NICHOL
825 BATTERY STREET
SAN FRANCISCO, CA 94111

Caltrans now has a web site! To get to the web site, go to: http://www.dot.ca.gov

DRAFT

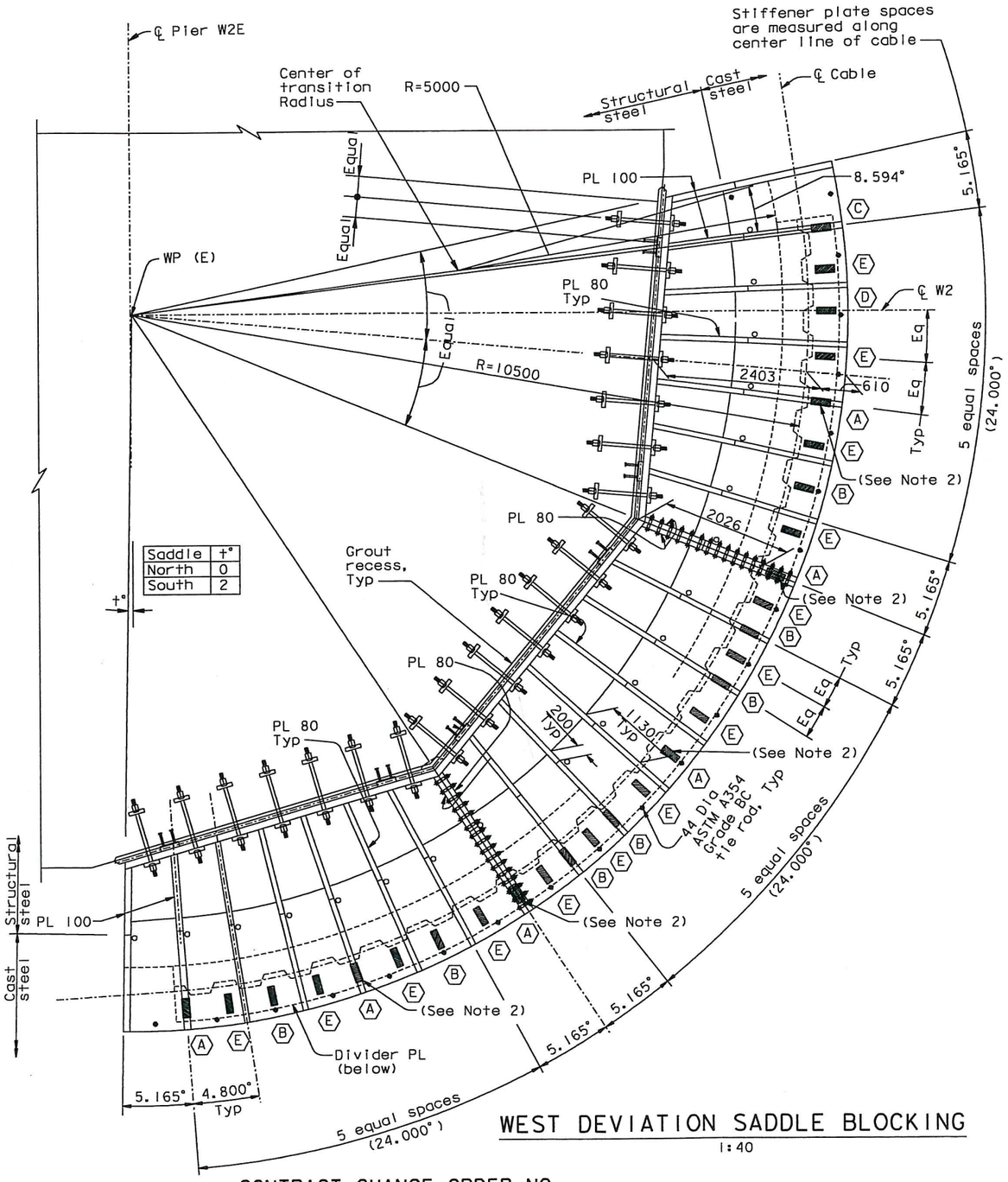

WEST DEVIATION SADDLE BLOCKING

1:40

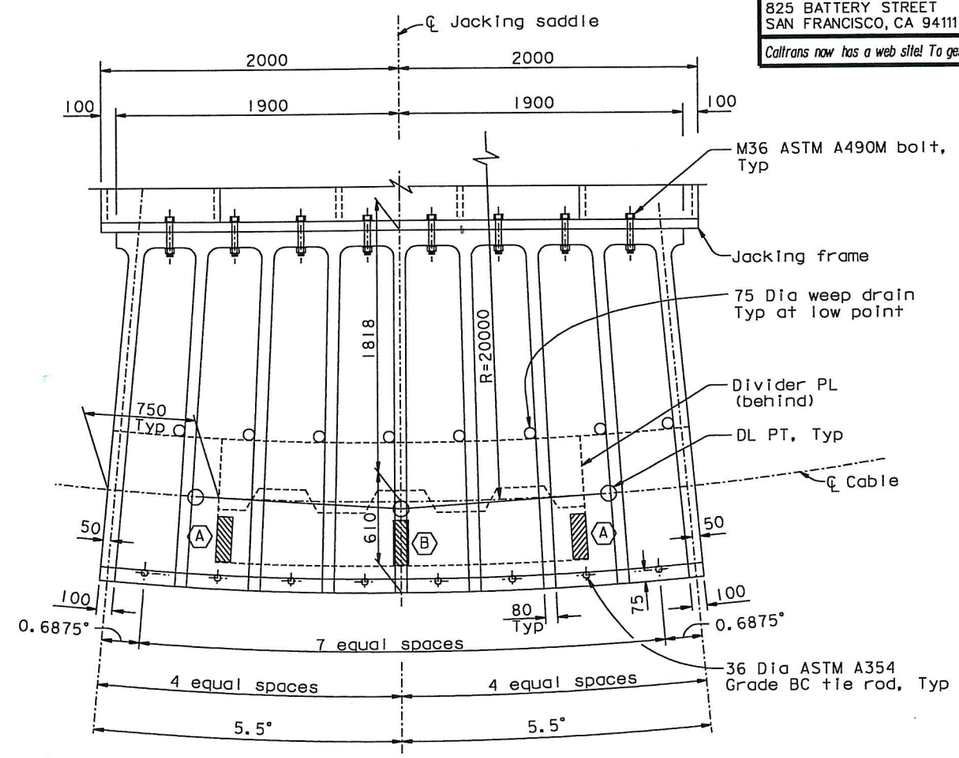

JACKING SADDLE BLOCKING

1:20

LEGEND:

Location of Saddle Blocking

(A) Blocking Type

NOTES:

1. For blocking types and details, see "West Deviation Saddle Details No.7" sheet.
2. Blocking at these locations shall straddle the as-built divider plate radial joint.

CONTRACT CHANGE ORDER NO. ____
SHEET ____ OF ____

REQUESTS FOR INFORMATION NOT ADDRESSED IN THIS CCO REMAIN IN FORCE

ALL DIMENSIONS ARE IN MILLIMETERS UNLESS OTHERWISE SHOWN

R. Valizadeh/V. Toan/Y.L./W.L./F.C.
DESIGN OVERSIGHT
SIGN OFF DATE XX/XX/12

MARK	DATE	DESCRIPTIONS	BY	CH'D	CCO#
0	XX/XX/12	XXXXXX	XX	XX	XXX

REVISIONS

DESIGN	BY X. XXX	CHECKED	X. XXX
DETAILS	BY X. XXX	CHECKED	X. XXX
QUANTITIES	BY X. XXX	CHECKED	X. XXX

PREPARED FOR THE STATE OF CALIFORNIA DEPARTMENT OF TRANSPORTATION

R. Manzanarez
PROJECT ENGINEER

BRIDGE NO. 34-0006L/R
KILOMETER POST 13.2/13.9

SAN FRANCISCO OAKLAND BAY BRIDGE
EAST SPAN SEISMIC SAFETY PROJECT
SELF-ANCHORED SUSPENSION BRIDGE
(SUPERSTRUCTURE & TOWER)

WEST DEVIATION SADDLE DETAILS NO. 6

Rev. Date: 5-18-98

ORIGINAL SCALE IN MILLIMETERS FOR REDUCED PLANS 0 10 20 30 40 50 60 70 80 90 100

CU 04
EA 0120F1

DISREGARD PRINTS BEARING EARLIER REVISION DATES XX/XX/12

REVISION DATES (PRELIMINARY STAGE ONLY)

SHEET 352S1 OF

100 % PS&E

USERNAME => arivera DATE PLOTTED => 25 APR 2012 TIME PLOTTED => 11:00:36

DRAFT

DIST.	COUNTY	ROUTE	KILOMETER POST TOTAL PROJECT	SHEET NO.	TOTAL SHEETS
04	SF	80	13.2/13.9	769S2	1204

Caltrans Metric

REGISTERED ENGINEER - CIVIL

XX-XX-12
PLANS APPROVAL DATE

REGISTERED PROFESSIONAL ENGINEER No. Exp. CIVIL STATE OF CALIFORNIA

The State of California or its officers or agents shall not be responsible for the accuracy or completeness of electronic copies of this plan sheet.

T.Y. LIN / MOFFATT & NICHOL
825 BATTERY STREET
SAN FRANCISCO, CA 94111

Caltrans now has a web site! To get to the web site, go to: http://www.dot.ca.gov

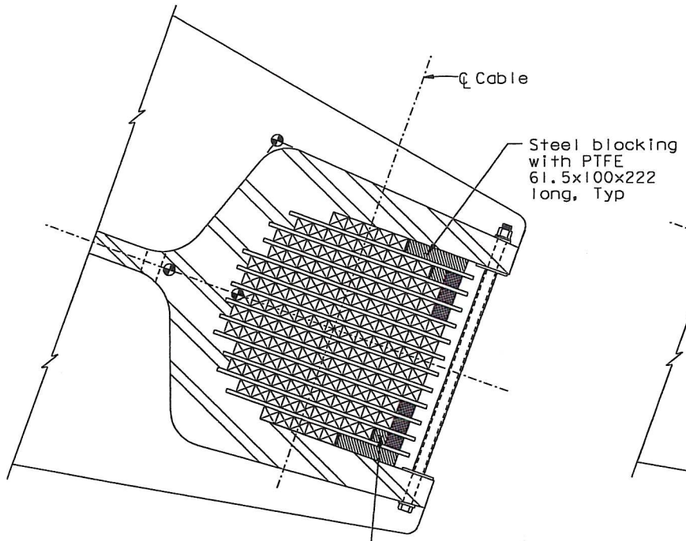

TYPE A BLOCKING
NTS

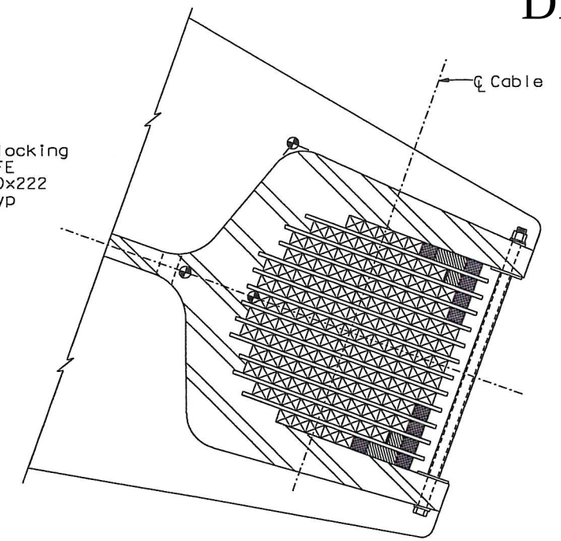

TYPE B BLOCKING
NTS

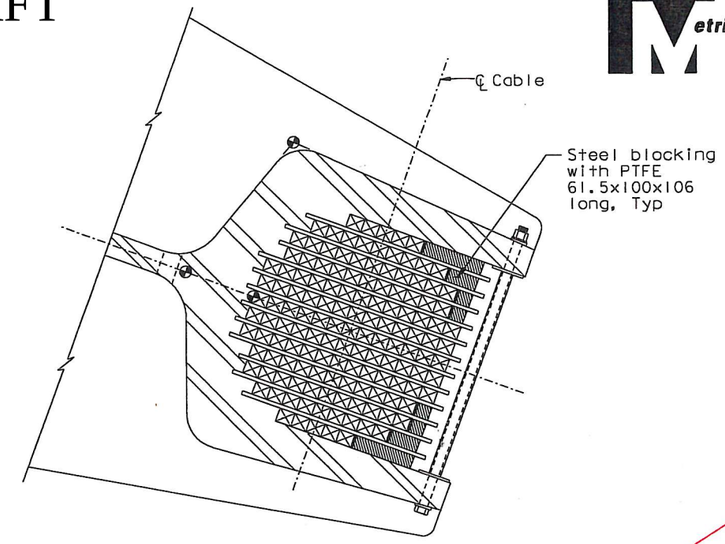

TYPE C BLOCKING
NTS

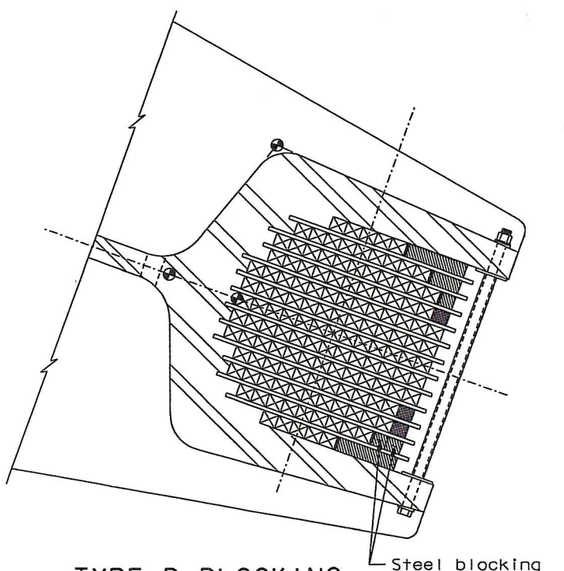

TYPE D BLOCKING
NTS

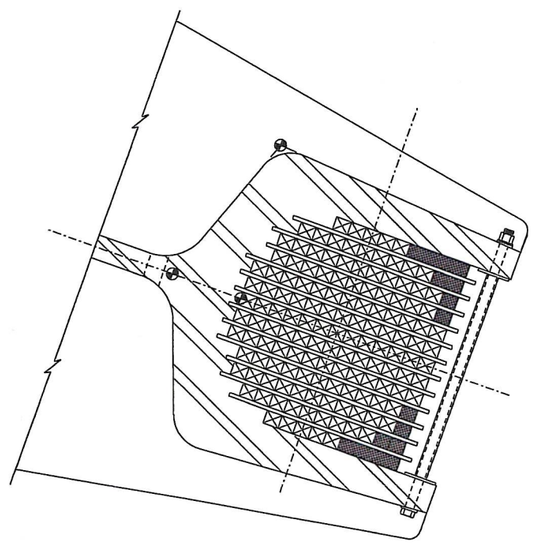

TYPE E BLOCKING
NTS

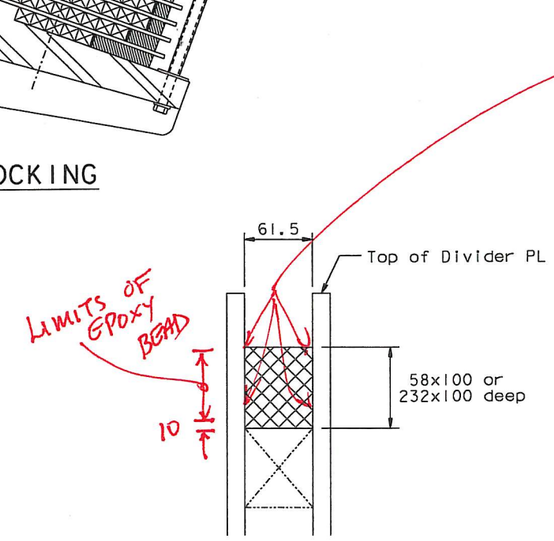

UHMWP BLOCKING DETAIL
1:2.5
(See Note 2)

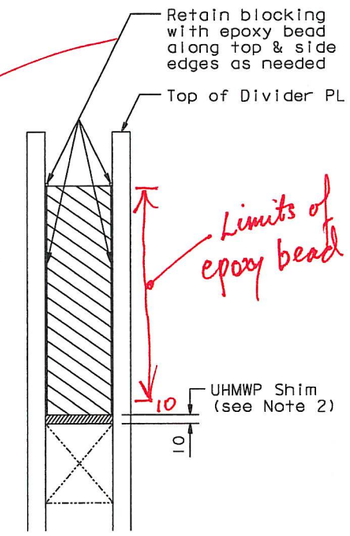

STEEL BLOCKING DETAIL
1:2.5
(See Note 1)

LEGEND:

- Steel Blocking (See Note 1)
- UHMWP Blocking (See Note 2)

NOTES:

1. Steel blocking fabricated for Tower saddle shall be used for West deviation and jacking saddles.
2. At the Contractor's option, hardwood shims and blocking may be used in lieu of UHMWP.
3. The completed blocking at each location is fabricated to fit tightly. Should tight fit not be achieved, the Contractor shall inform the Engineer for evaluation.

CONTRACT CHANGE ORDER NO. ____
SHEET ____ OF ____

REQUESTS FOR INFORMATION NOT ADDRESSED IN THIS CCO REMAIN IN FORCE

ALL DIMENSIONS ARE IN MILLIMETERS UNLESS OTHERWISE SHOWN

R. Valizadeh/V. Toan/Y.L./W.L./F.C.
DESIGN OVERSIGHT
Reza Valizadeh / Vong Toan / Y. Liu
SIGN OFF DATE XX/XX/12

MARK	DATE	DESCRIPTIONS	BY	CH'D	CCO#
0	XX/XX/12	XXXXXX	XX	XX	XXX

REVISIONS

DESIGN	BY X. XXX	CHECKED	X. XXX
DETAILS	BY X. XXX	CHECKED	X. XXX
QUANTITIES	BY X. XXX	CHECKED	X. XXX

PREPARED FOR THE STATE OF CALIFORNIA DEPARTMENT OF TRANSPORTATION

R. Manzanarez
PROJECT ENGINEER

BRIDGE NO. 34-0006L/R
KILOMETER POST 13.2/13.9

CU 04
EA 0120F1

SAN FRANCISCO OAKLAND BAY BRIDGE
EAST SPAN SEISMIC SAFETY PROJECT
SELF-ANCHORED SUSPENSION BRIDGE
(SUPERSTRUCTURE & TOWER)

WEST DEVIATION SADDLE DETAILS NO. 7

SHEET 352S2 OF

DISREGARD PRINTS BEARING EARLIER REVISION DATES XX/XX/12

REVISION DATES (PRELIMINARY STAGE ONLY)

ORIGINAL SCALE IN MILLIMETERS FOR REDUCED PLANS 0 10 20 30 40 50 60 70 80 90 100

Rev. Date: 5-18-98

100% PS&E

USERNAME => grivera DATE PLOTTED => 25 APR 2012 TIME PLOTTED => 11:30:41