DIST.	COUNTY	ROUTE	KILOMETER POST TOTAL PROJECT	SHEET NO.	TOTAL SHEETS
04	SF	80	13.2/13.9	748R2	1204

Caltrans Metric

George Baker
REGISTERED ENGINEER - CIVIL
12-6-04
PLANS APPROVAL DATE

REGISTERED PROFESSIONAL ENGINEER George S. Baker No. C 57112 Exp. 12/31/05 CIVIL STATE OF CALIFORNIA

The State of California or its officers or agents shall not be responsible for the accuracy or completeness of electronic copies of this plan sheet.

T.Y. LIN / MOFFATT & NICHOL
825 BATTERY STREET
SAN FRANCISCO, CA 94111

Caltrans now has a web site! To get to the web site, go to: http://www.dot.ca.gov

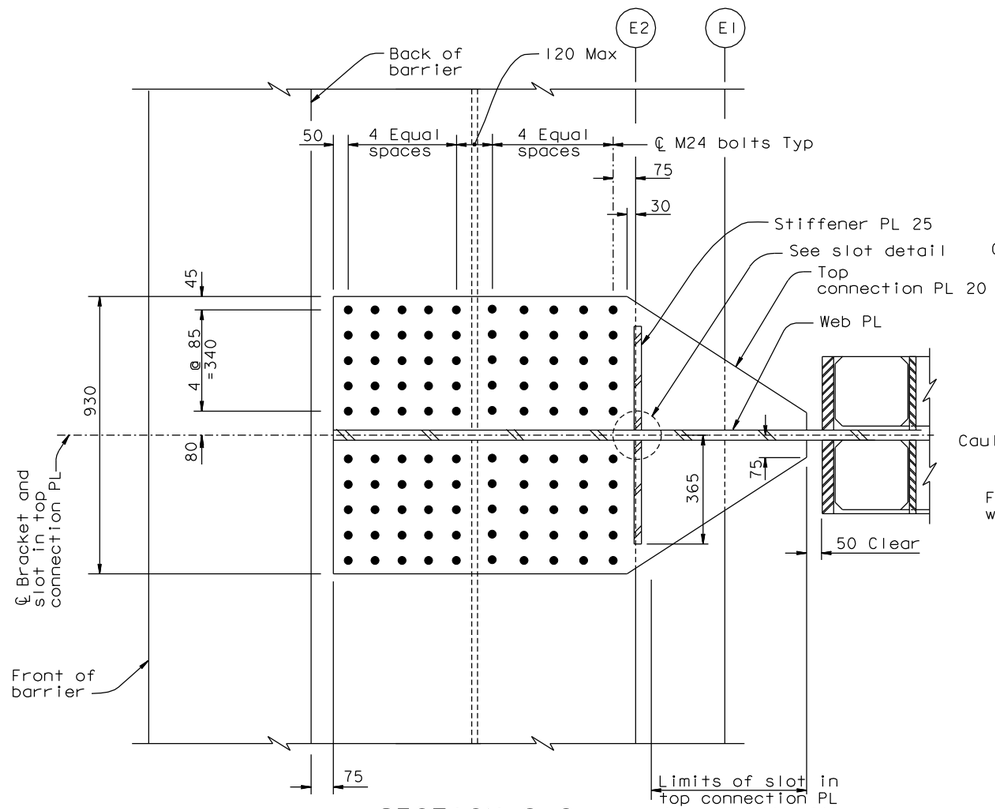

SECTION C-C
1:10

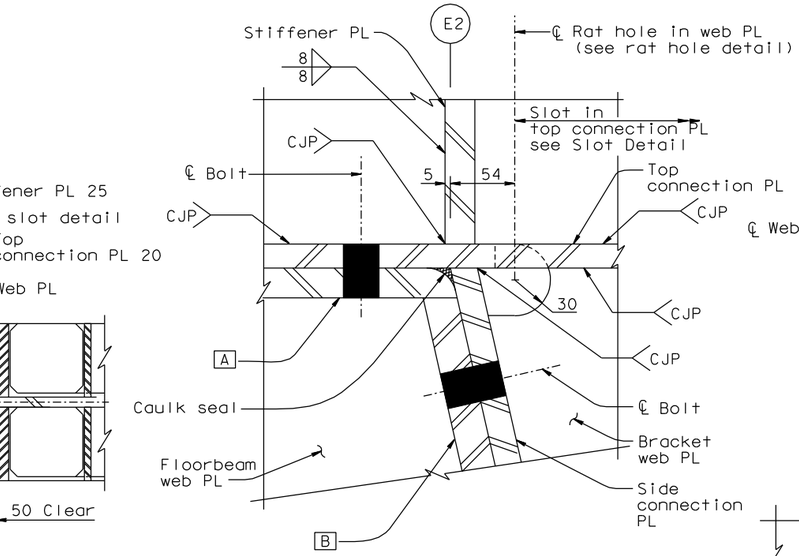

DETAIL A
1:2.5

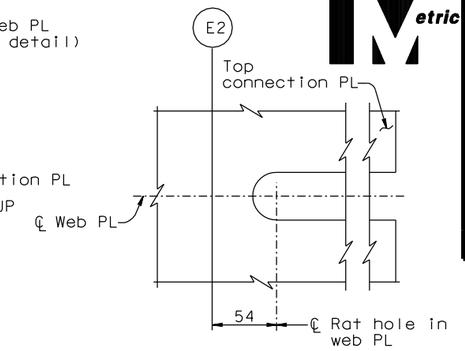

TOP CONNECTION PL
SLOT DETAIL
1:2.5

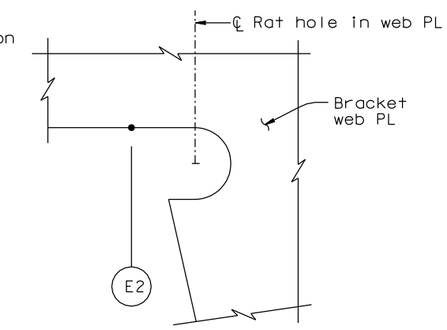

RAT HOLE DETAIL
1:2.5

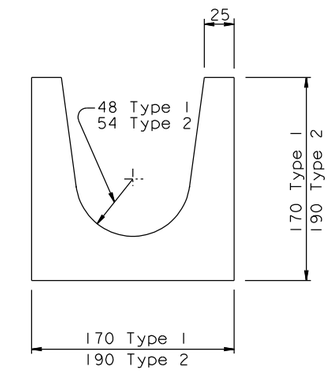

SLOTTED SHIM DETAIL
1:2.5
(See Note 5)

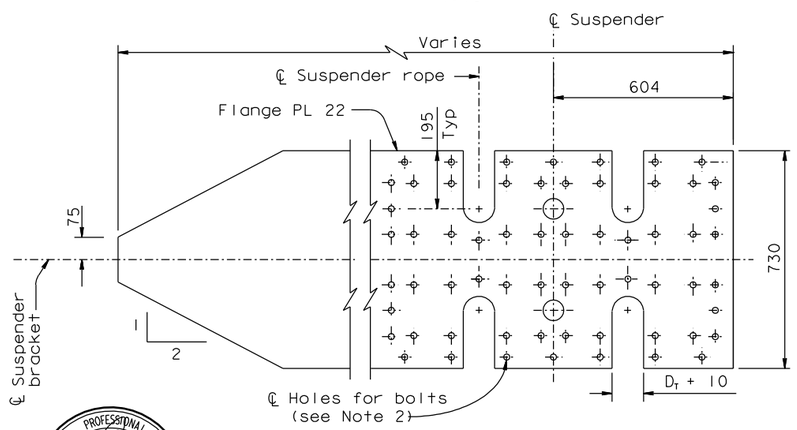

FLANGE PLATE DETAIL
1:10

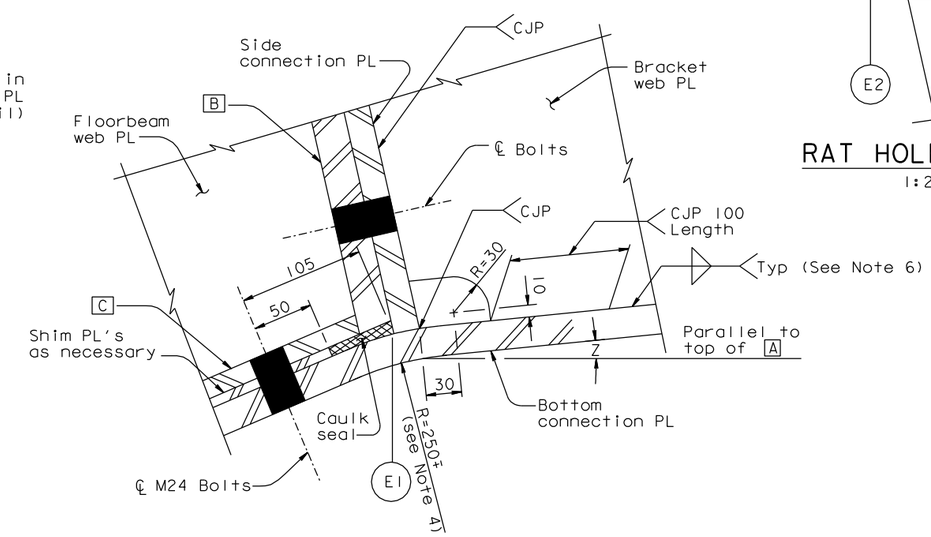

DETAIL B
1:2.5

NOTES:

1. For location of suspender Types 1 and 2, see "Suspender Layout" sheets.
2. For flange plate bolt pattern, see "Suspender Bracket Details No. 4" sheet.
3. For suspender socket details, see "Suspender Socket Details" sheet.
4. The bend in the bottom connection PL shall be centered on the side connection PL.
5. For other shim notes, see "Suspender Bracket Details No. 3" and "Suspender Bracket Details No. 10" sheet. △2
6. For weld sizes, see "Suspender Bracket Details No. 3" sheet.

LEGEND:

D_T = Diameter of Opening at top of Suspender Socket (see Note 3)

REGISTERED PROFESSIONAL ENGINEER Marwan N. Nader No. C 054426 Exp. 12/31/13 CIVIL STATE OF CALIFORNIA

FOR REVISIONS ONLY

CONTRACT CHANGE ORDER NO. ____
SHEET ___ OF ___

REQUESTS FOR INFORMATION NOT ADDRESSED IN THIS CCO REMAIN IN FORCE

ALL DIMENSIONS ARE IN MILLIMETERS UNLESS OTHERWISE SHOWN

R. Valizadeh/V. Toan/Y.L./W.L./F.C.
DESIGN OVERSIGHT
Roya Valizadeh / Vong Toan / Y. Liu
SIGN OFF DATE 04/09/12

MARK	DATE	DESCRIPTIONS	BY	CH'D	CCO#
2	04/05/12	SUSPENSION SYSTEM SHIMS	GB	MN	240
1	04/16/07	CABLE SYSTEM	GB	DT	37

REVISIONS

DESIGN	BY G. Baker	CHECKED	T. McMeans
DETAILS	BY S. Camo	CHECKED	P. Ritchie
QUANTITIES	BY C. Mauch	CHECKED	C. Mibelli

PREPARED FOR THE STATE OF CALIFORNIA DEPARTMENT OF TRANSPORTATION

R. Manzanarez
PROJECT ENGINEER

BRIDGE NO. 34-0006L/R
KILOMETER POST 13.2/13.9

SAN FRANCISCO OAKLAND BAY BRIDGE
EAST SPAN SEISMIC SAFETY PROJECT
SELF-ANCHORED SUSPENSION BRIDGE
(SUPERSTRUCTURE & TOWER)

SUSPENDER BRACKET DETAILS NO. 2

Rev. Date: 5-18-98

ORIGINAL SCALE IN MILLIMETERS FOR REDUCED PLANS 0 10 20 30 40 50 60 70 80 90 100

CU 04
EA 0120F1

DISREGARD PRINTS BEARING EARLIER REVISION DATES

REVISION DATES (PRELIMINARY STAGE ONLY) 05/15/99 08/02/99 05/31/01 04/08/02 07/01/02 12/19/02

SHEET 331R2 OF

FILE => I:\bb\04-012001\sas\contract plans and cco\cco\cco*240\1-original 04-05-12\dgn\agsadlla.dgn

100 % PS&E DATE PLOTTED => 05 APR 2012 TIME PLOTTED => 08:50:14
USERNAME => arivera

DIST.	COUNTY	ROUTE	KILOMETER POST TOTAL PROJECT	SHEET NO.	TOTAL SHEETS
04	SF	80	13.2/13.9	749R2	1204

Caltrans Metric

George Baker
REGISTERED ENGINEER - CIVIL
12-6-04
PLANS APPROVAL DATE

REGISTERED PROFESSIONAL ENGINEER George S. Baker No. C 57112 Exp. 12/31/05 CIVIL STATE OF CALIFORNIA

The State of California or its officers or agents shall not be responsible for the accuracy or completeness of electronic copies of this plan sheet.

T.Y. LIN / MOFFATT & NICHOL
825 BATTERY STREET
SAN FRANCISCO, CA 94111

Caltrans now has a web site! To get to the web site, go to: http://www.dot.ca.gov

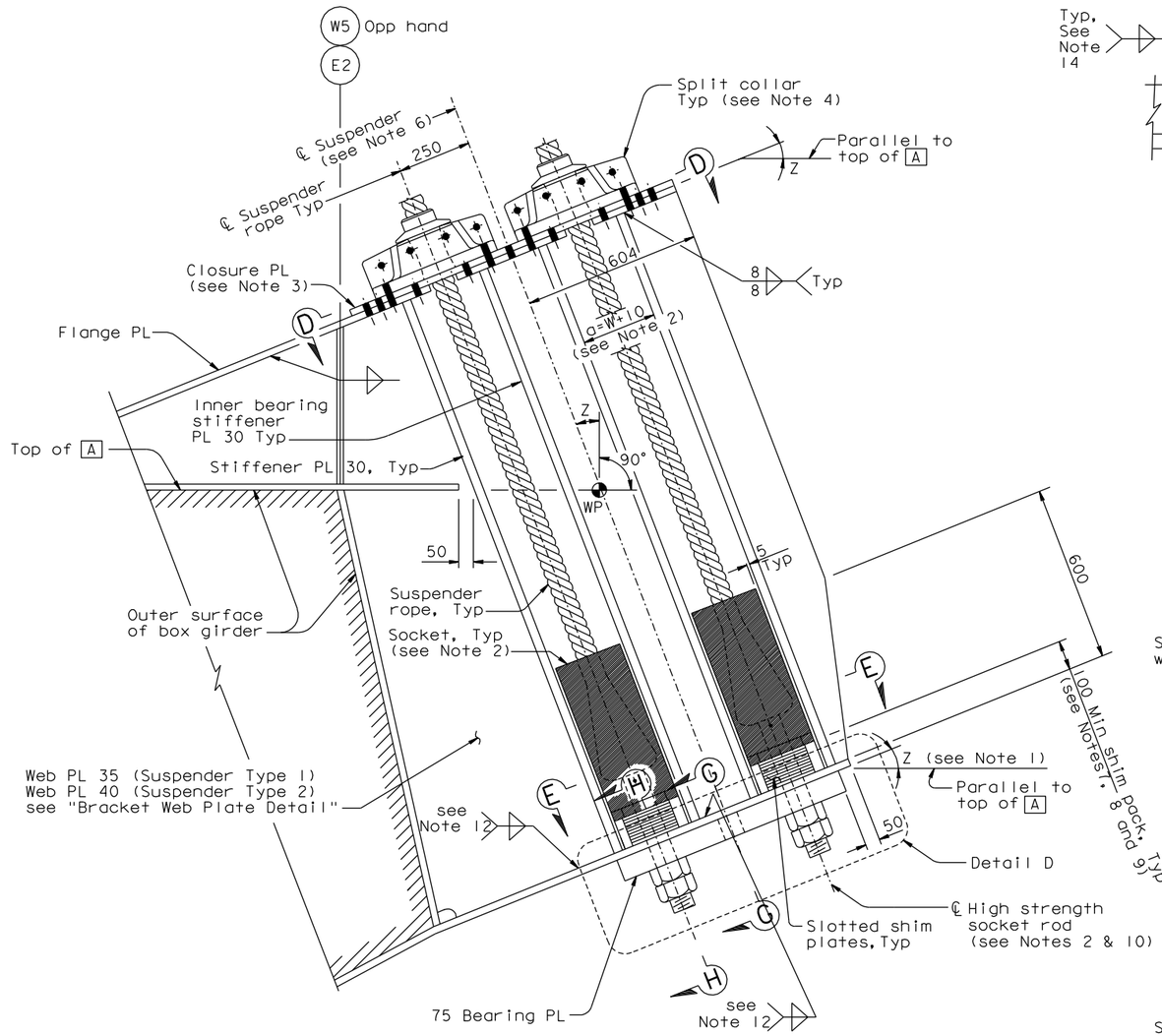

SUSPENDER ANCHORAGE

DETAIL C

1:10

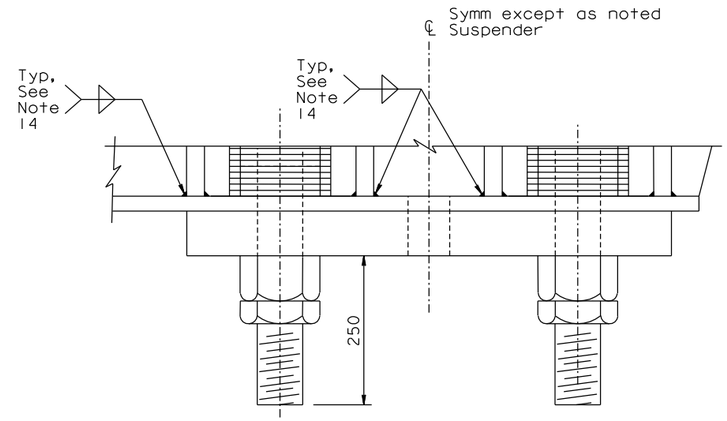

DETAIL D

1:5

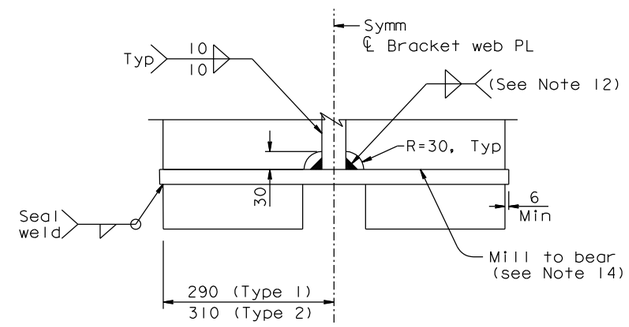

SECTION G-G

1:5

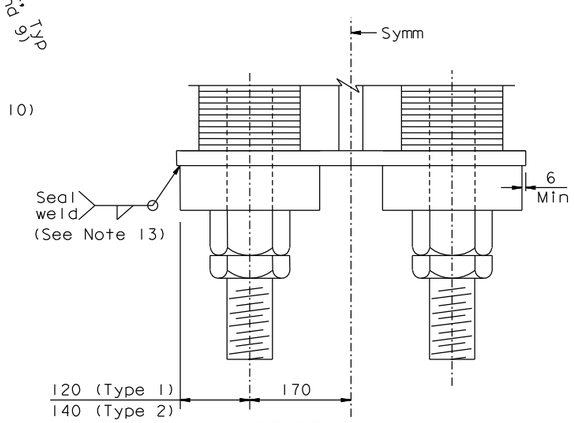

SECTION H-H

1:5

LEGEND:

W	Width of Suspender Socket Base
Y	Total thickness of shim plates and anchor plate
▨	Suspender Socket (see Note 2)
WP	Working Point (see Note 5)
A	Girder Face A

NOTES:

1. For Z and location of suspender Types 1 and 2, see "Suspender Layout" sheets. Angles Z are measured with respect to the top of A.
2. For suspender socket details, see "Suspender Socket Details" sheet.
3. For closure plate details, see "Suspender Bracket Details No. 4" sheet.
4. For split collar details, see "Suspender Bracket Details No. 5" sheet.
5. For Working Point details, see "Suspender Layout No. 1" sheet.
6. Suspender ℄ varies with bracket location. Cutouts and bolts in flange PL shall be placed with respect to suspender ℄.
7. The Contractor shall provide the specified shim pack thickness for erection adjustment as directed by the Engineer, and to provide future tension adjustment for a LRT. The Contractor may add additional shims as part of his fabrication methods, subject to approval by the Engineer.
8. NOTE DELETED. △2
9. For shim stack heights, see "Suspender Bracket Details No. 10" sheet.
10. The diameter of holes in bearing plate for socket rods shall be 4 mm greater than the rod diameter.
11. Socket rods shall be prestressed to 0.5 Fy.
12. Fillet weld size shall be 10 mm for Type 1 suspender brackets and shall be 15 mm for Type 2 suspender brackets.
13. The Contractor may increase the size of the fillet weld as part of his means and methods, subject to review and approval of the Engineer.
14. At the Contractor's option, a CJP weld may be used.

REGISTERED PROFESSIONAL ENGINEER Marwan N. Nader No. C 054426 Exp. 12/31/13 CIVIL STATE OF CALIFORNIA

FOR REVISIONS ONLY

CONTRACT CHANGE ORDER NO. _____
SHEET ____ OF ____

REQUESTS FOR INFORMATION NOT ADDRESSED IN THIS CCO REMAIN IN FORCE

ALL DIMENSIONS ARE IN MILLIMETERS UNLESS OTHERWISE SHOWN

MARK	DATE	DESCRIPTIONS	BY	CH'D	CCO#
2	04/05/12	SUSPENSION SYSTEM SHIMS	GB	MN	240
1	04/16/07	CABLE SYSTEM	GB	DT	37

REVISIONS

R. Valizadeh/V. Toan/Y.L./W.L./F.C.
DESIGN OVERSIGHT
Roya Valizadeh / Vong Toan / Y. Liu
SIGN OFF DATE 04/05/12

DESIGN	BY G. Baker	CHECKED T. McMeans	
DETAILS	BY S. Camo	CHECKED P. Ritchie	
QUANTITIES	BY C. Mauch	CHECKED C. Mibelli	

PREPARED FOR THE STATE OF CALIFORNIA DEPARTMENT OF TRANSPORTATION

R. Manzanarez
PROJECT ENGINEER

BRIDGE NO. 34-0006L/R
KILOMETER POST 13.2/13.9

SAN FRANCISCO OAKLAND BAY BRIDGE
EAST SPAN SEISMIC SAFETY PROJECT
SELF-ANCHORED SUSPENSION BRIDGE
(SUPERSTRUCTURE & TOWER)

SUSPENDER BRACKET DETAILS NO. 3

Rev. Date: 5-18-98

ORIGINAL SCALE IN MILLIMETERS FOR REDUCED PLANS 0 10 20 30 40 50 60 70 80 90 100

CU 04
EA 0120F1

DISREGARD PRINTS BEARING EARLIER REVISION DATES → 05/15/99 08/02/99 05/31/01 04/08/02 01/07/02 12/19/02 11/13/05

SHEET 332R2 OF

FILE => I:\bb\04-012001\sas\contract plans and cco\cco\cco#240\1-original 04-05-12\dgn\agsad12.dgn

USERNAME => arivera DATE PLOTTED => 05 APR 2012 TIME PLOTTED => 08:52:50

100% PS&E

DIST.	COUNTY	ROUTE	KILOMETER POST TOTAL PROJECT	SHEET NO.	TOTAL SHEETS
04	SF	80	13.2/13.9	752R4	1204

George Baker
REGISTERED ENGINEER - CIVIL
12-6-04
PLANS APPROVAL DATE

REGISTERED PROFESSIONAL ENGINEER George S. Baker No. C 57112 Exp. 12/31/05 CIVIL STATE OF CALIFORNIA

The State of California or its officers or agents shall not be responsible for the accuracy or completeness of electronic copies of this plan sheet.

Caltrans Metric

T.Y. LIN / MOFFATT & NICHOL
825 BATTERY STREET
SAN FRANCISCO, CA 94111

Caltrans now has a web site! To get to the web site, go to: http://www.dot.ca.gov

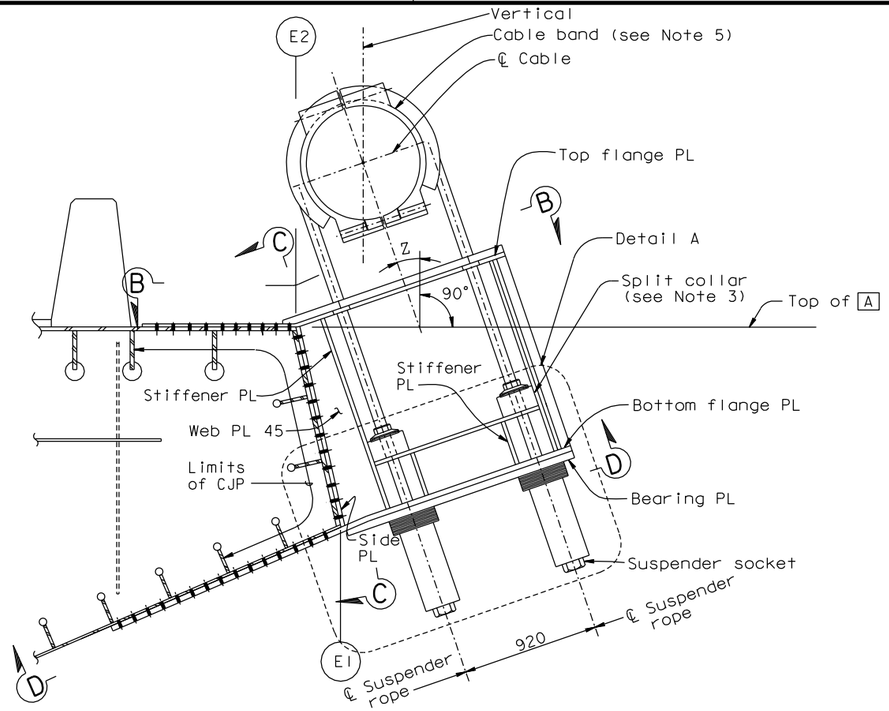

ELEVATION
SUSPENDER BRACKET AT PP 104, 106 (See Note 6)
1:20

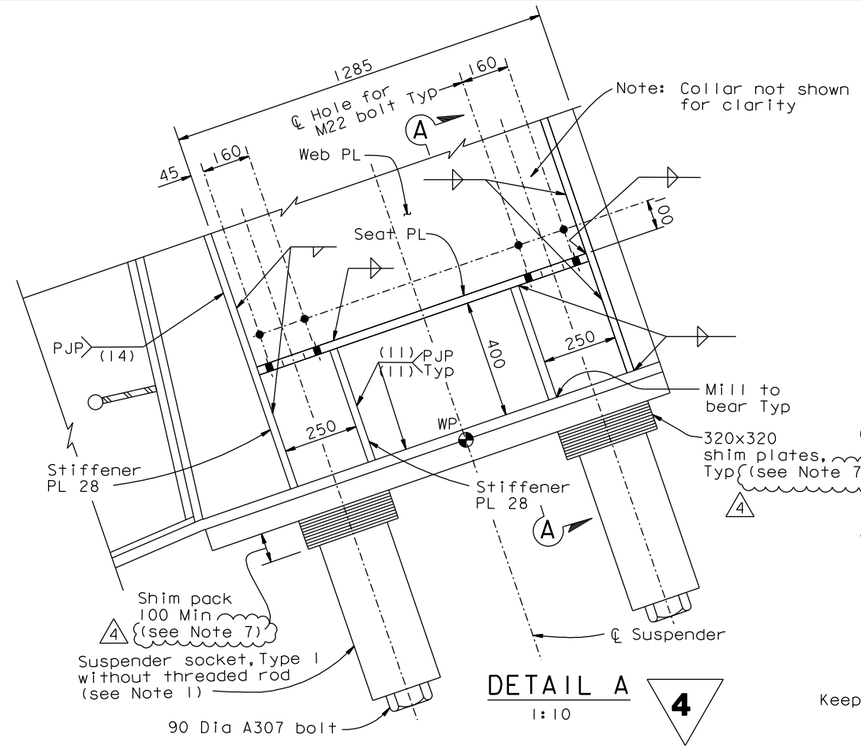

DETAIL A
1:10
4

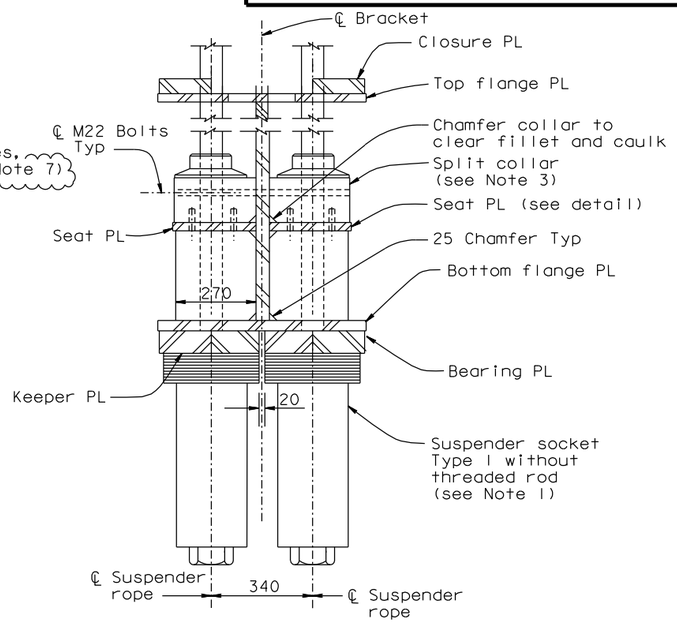

SECTION A-A
1:10

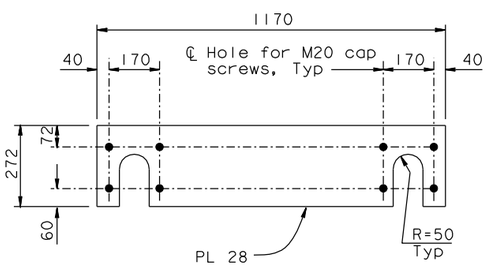

SEAT PLATE DETAIL
1:10

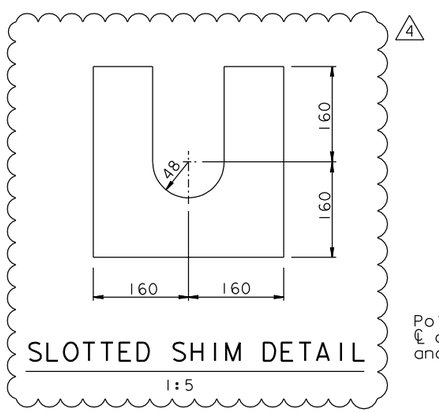

SLOTTED SHIM DETAIL
1:5

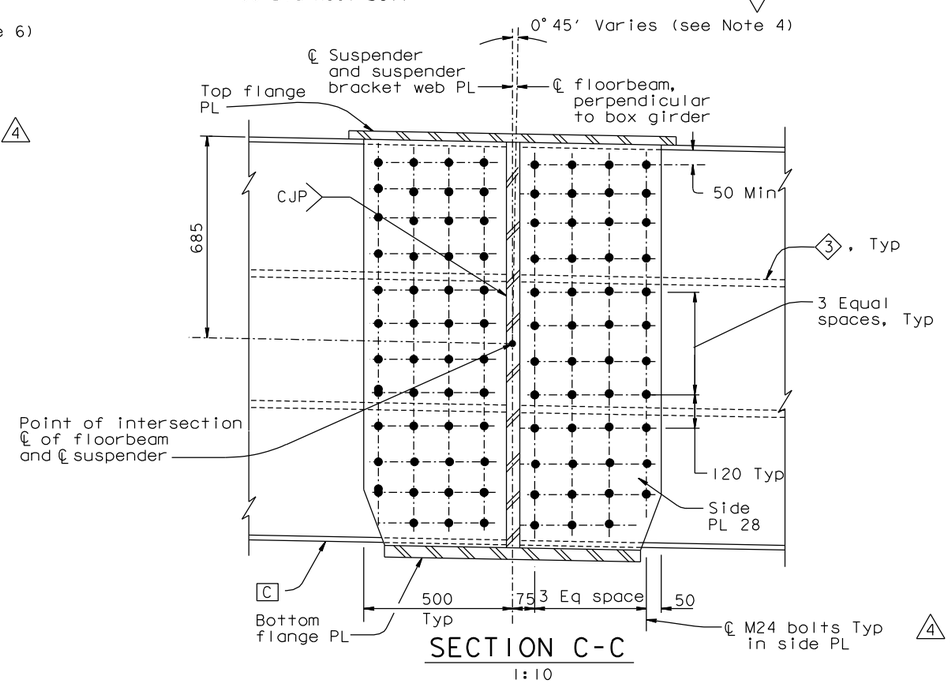

SECTION C-C
1:10

LEGEND:

3 Girder stiffener Type 3

C Girder face C

NOTES:

1. Threaded rod may be used for erection. After installation of suspender socket, ends shall be sealed with 90 Dia A307 bolts.
2. For details not shown, see "Suspender Bracket Details No.1" through "Suspender Bracket Details No.3" sheets.
3. For split collar details, see "Suspender Bracket Details No.5" sheet.
4. The Contractor shall consider variation in roadway grade in his details.
5. For cable band details, see "Cable Band Details" and "Cable Handrope Details" sheets.
6. For suspender brackets at PP 108 and PP 110, see "Suspender Bracket Details No.8" and "Suspender Bracket Details No.9" sheets.
7. For shim stack heights, see "Suspender Bracket Details No.10" sheet. 4

ALL DIMENSIONS ARE IN MILLIMETERS UNLESS OTHERWISE SHOWN

REGISTERED PROFESSIONAL ENGINEER Marwan N. Nader No. C 054426 Exp. 12/31/13 CIVIL STATE OF CALIFORNIA

FOR REVISIONS ONLY

CONTRACT CHANGE ORDER NO. ____
SHEET ____ OF ____

REQUESTS FOR INFORMATION NOT ADDRESSED IN THIS CCO REMAIN IN FORCE

MARK	DATE	DESCRIPTIONS	BY	CH'D	CCO#
4	04/05/12	SUSPENSION SYSTEM SHIMS	GB	MN	240
3	02/20/09	SUSPENDER BRACKETS	GB	DT	104
2	08/15/08	CABLE ELECTRICAL	GB	DT	72
1	04/16/07	CABLE SYSTEM	GB	DT	37

REVISIONS

R. Valizadeh/V. Toan/Y.L./W.L./F.C.
DESIGN OVERSIGHT
SIGN OFF DATE 04/05/12

	BY	CHECKED
DESIGN	G. Baker	T. McMeans
DETAILS	S. Camo	P. Ritchie
QUANTITIES	C. Mauch	C. Mibelli

PREPARED FOR THE STATE OF CALIFORNIA DEPARTMENT OF TRANSPORTATION

R. Manzanarez
PROJECT ENGINEER

BRIDGE NO. 34-0006L/R
KILOMETER POST 13.2/13.9

SAN FRANCISCO OAKLAND BAY BRIDGE
EAST SPAN SEISMIC SAFETY PROJECT
SELF-ANCHORED SUSPENSION BRIDGE
(SUPERSTRUCTURE & TOWER)

SUSPENDER BRACKET DETAILS NO. 6

Rev. Date: 5-18-98

ORIGINAL SCALE IN MILLIMETERS FOR REDUCED PLANS 0 10 20 30 40 50 60 70 80 90 100

CU 04
EA 0120F1

DISREGARD PRINTS BEARING EARLIER REVISION DATES

REVISION DATES (PRELIMINARY STAGE ONLY) 01/15/99 05/15/99 05/31/01 04/08/02 01/07/02 12/19/02 11/13/05

SHEET 335R4 OF

FILE => I:\bb\04-012001\sas\contract plans and cco\cco\cco#240\1-original 04-05-12\dgn\agsad13.dgn

USERNAME => arivera DATE PLOTTED => 05 APR 2012 TIME PLOTTED => 08:53:25

100% PS&E

DIST.	COUNTY	ROUTE	KILOMETER POST TOTAL PROJECT	SHEET NO.	TOTAL SHEETS
04	SF	80	13.2/13.9	753SIR3	1204

Caltrans Metric

REGISTERED ENGINEER - CIVIL

02-20-09
PLANS APPROVAL DATE

REGISTERED PROFESSIONAL ENGINEER Marwan N. Nader No. C 054426 Exp. 12/31/13 CIVIL STATE OF CALIFORNIA

The State of California or its officers or agents shall not be responsible for the accuracy or completeness of electronic copies of this plan sheet.

T.Y. LIN / MOFFATT & NICHOL
825 BATTERY STREET
SAN FRANCISCO, CA 94111

Caltrans now has a web site! To get to the web site, go to: http://www.dot.ca.gov

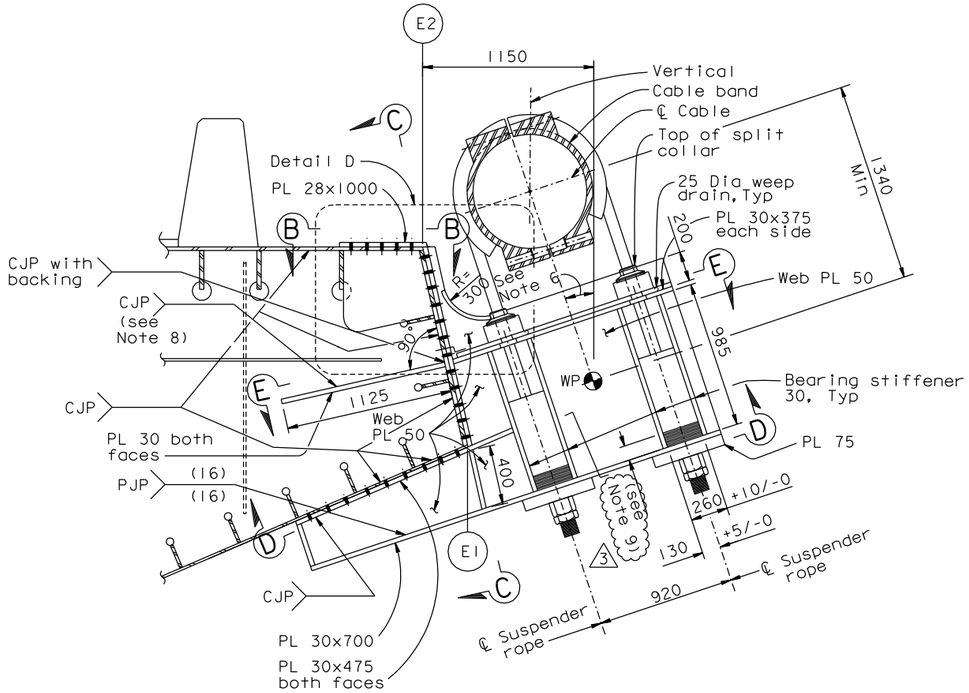

ELEVATION

SUSPENDER BRACKET AT PP 108, 110 (See Note 3)

1:20

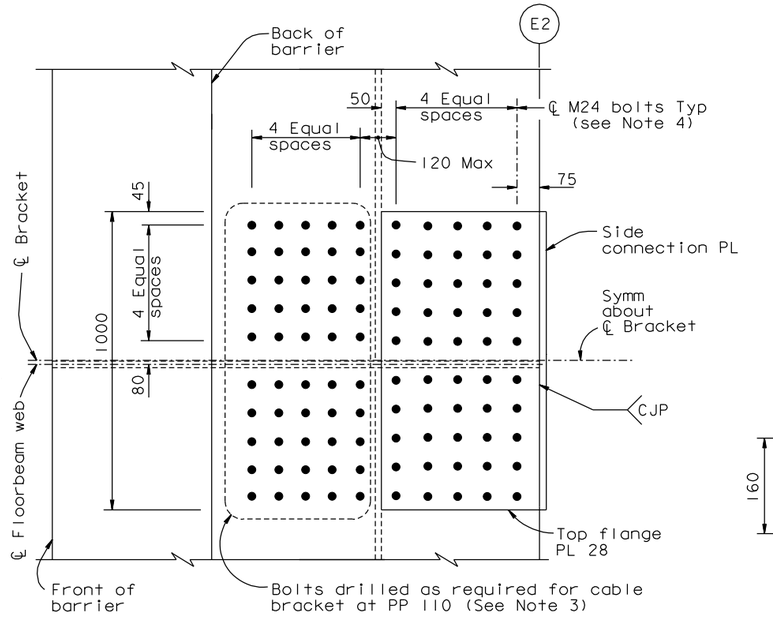

VIEW B-B (Top flange connection)

1:10

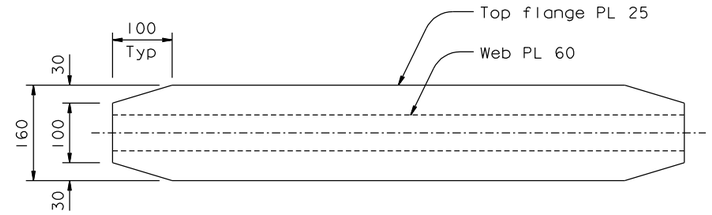

VIEW G-G

1:5

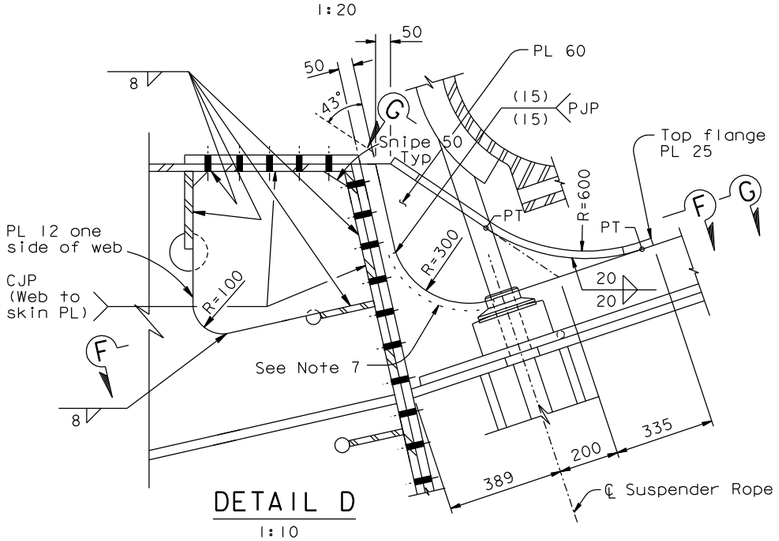

DETAIL D

1:10

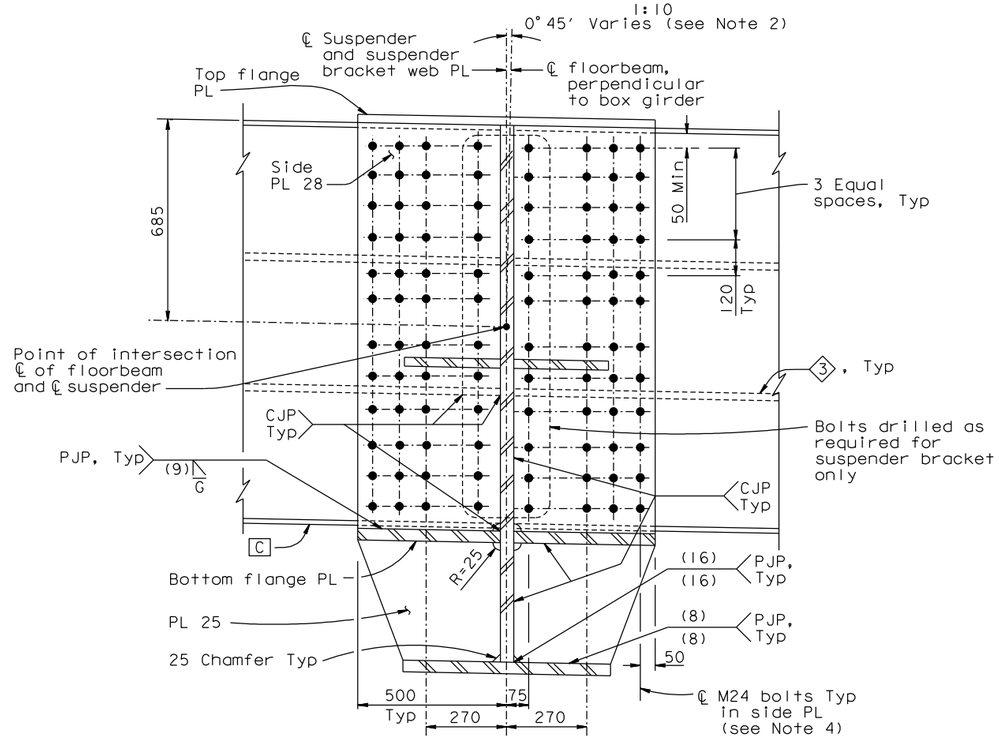

SECTION C-C

1:10

LEGEND:

3 Girder stiffener Type 3

C Girder face C

NOTES:

1. For details not shown, see "Suspender Bracket Details No.1" through "Suspender Bracket Details No.3" sheets.
2. The Contractor shall consider variation in roadway grade in his details.
3. The Contractor shall provide shop drawings for two suspender brackets at PP 110 ("E" line and "W" line). The Contractor shall fabricate and install a suspender bracket at PP 110 ("E" line and "W" line).
4. Bolt spacings shall match cable bracket details, see "Cable Bracket Details" sheets.
5. For View D-D, Section E-E and F-F, see "Suspender Bracket Details No. 9" sheet.
6. All suspender bracket components shall be fabricated to fit the computed cable profile.
7. Remove curve PL 20x50 from both sides and grind flush.
8. At the Contractor's option, CJP with backing may be used, subject to review and approval of the engineer.
9. For shim stack heights, see "Suspender Bracket Details No.10" sheet.

CONTRACT CHANGE ORDER NO. ____
SHEET ___ OF ___

REQUESTS FOR INFORMATION NOT ADDRESSED IN THIS CCO REMAIN IN FORCE

MARK	DATE	DESCRIPTIONS	BY	CH'D	CCO#
3	04/05/12	SUSPENSION SYSTEM SHIMS	GB	MN	240
2	01/05/12	FIELD MODIFICATION OF SUSPENDER BRACKETS	GB	MN	230
1	12/31/09	SUSPENDER BRACKETS	GB	MN	104
0	02/20/09	SUSPENDER BRACKETS	GB	MN	104

REVISIONS

R. Valizadeh/V.Toan/Y.L./W.L./F.C.
DESIGN OVERSIGHT
SIGN OFF DATE 04/09/12

	BY	CHECKED
DESIGN	G. Baker	M. Nader
DETAILS	G. Baker	M. Nader
QUANTITIES	G. Baker	M. Nader

PREPARED FOR THE STATE OF CALIFORNIA DEPARTMENT OF TRANSPORTATION

R. Manzanarez
PROJECT ENGINEER

BRIDGE NO. 34-0006L/R
KILOMETER POST 13.2/13.9

ALL DIMENSIONS ARE IN MILLIMETERS UNLESS OTHERWISE SHOWN

SAN FRANCISCO OAKLAND BAY BRIDGE
EAST SPAN SEISMIC SAFETY PROJECT
SELF-ANCHORED SUSPENSION BRIDGE
(SUPERSTRUCTURE & TOWER)

SUSPENDER BRACKET DETAILS NO. 8

Rev. Date: 5-18-98

ORIGINAL SCALE IN MILLIMETERS FOR REDUCED PLANS 0 10 20 30 40 50 60 70 80 90 100

CU 04
EA 0120F1

DISREGARD PRINTS BEARING EARLIER REVISION DATES 01/30/09

REVISION DATES (PRELIMINARY STAGE ONLY)

SHEET 336SIR3 OF

FILE => I:\bb\04-01200I\sas\contract plans and cco\cco\cco#240\I-original 04-05-12\dgn\agsadI3c.dgn

100 % PS&E

USERNAME => grivera DATE PLOTTED => 05 APR 2012 TIME PLOTTED => 08:54:05

DIST.	COUNTY	ROUTE	KILOMETER POST TOTAL PROJECT	SHEET NO.	TOTAL SHEETS
04	SF	80	13.2/13.9	753S3R1	1204

REGISTERED ENGINEER - CIVIL

04-05-12
PLANS APPROVAL DATE

REGISTERED PROFESSIONAL ENGINEER Marwan N. Nader No. C 054426 Exp. 12/31/13 CIVIL STATE OF CALIFORNIA

The State of California or its officers or agents shall not be responsible for the accuracy or completeness of electronic copies of this plan sheet.

T.Y. LIN / MOFFATT & NICHOL
825 BATTERY STREET
SAN FRANCISCO, CA 94111

Caltrans now has a web site! To get to the web site, go to: http://www.dot.ca.gov

TOTAL NOMINAL SHIM HEIGHT (NORTH CABLE)		
PANEL POINT	TOTAL (mm)	
	UPHILL LEG	DOWNHILL LEG
PP 10-14	120	120
PP 16	120	120
PP 18	120	120
PP 20	140	140
PP 22	140	140
PP 24-28	120	120
PP 30	130	130
PP 32-40	120	120
PP 44-46	120	120
PP 48	130	130
PP 50	130	130
PP 52-58	120	120
PP 60	130	130
PP 62	120	120
PP 64	130	130
PP 66	120	120
PP 68	130	130
PP 70-92	170	170
PP 94	174	174
PP 96	170	177
PP 98	175	176
PP 100	175	175
PP 102	171	178
PP 104	112	109
PP 106	115	116
PP 108	126	117
PP 110	131	118

TOTAL NOMINAL SHIM HEIGHT (SOUTH CABLE)		
PANEL POINT	TOTAL (mm)	
	UPHILL LEG	DOWNHILL LEG
PP 10-14	120	120
PP 16	150	150
PP 18	130	130
PP 20	140	140
PP 22	140	140
PP 24-28	120	120
PP 30	140	140
PP 32	120	120
PP 34	140	140
PP 36	120	120
PP 38	130	130
PP 40	120	120
PP 44-50	120	120
PP 52	130	130
PP 54-64	120	120
PP 66	130	130
PP 68	120	120
PP 70-92	170	170
PP 94	173	174
PP 96	172	177
PP 98	172	178
PP 100	173	176
PP 102	176	178
PP 104	112	111
PP 106	116	117
PP 108	128	118
PP 110	129	117

SUSPENDER SOCKET SHIMS

1 ADDITIONAL SHIMS

For use at PP108 and PP110, the Contractor shall fabricate the following shims to be installed as directed by the Engineer:
- 16 shims @ 1/4 inch
- 32 shims @ 1/2 inch

NOTES:

1. For each suspender socket, as shown per "Suspender Bracket Details No.3", "Suspender Bracket Details No.6" & "Suspender Bracket Details No.8" sheets and per the Contractor's approved optional shims, the Contractor shall provide at each Panel Point both EB and WB shims as shown in the thicknesses shown in the Table 1.
2. The shims shall be hot dip galvanized.
3. The Contractor shall use shims of assorted thicknesses to achieve the total shim height shown in the tables.
4. Shim plate thickness shall be a minimum of 6 mm.
5. The total height of the shim stack installed shall be accurate to within: ±1 mm for PP102 to PP110,
   ±2 mm for PP10 and PP94 to PP100,
   ±3 mm for PP12 to PP92.
6. Prior to installation, preassemble shim packs under a compressive force equal to the suspender anchor rod pretension at every panel point to provide the specified nominal shim height to the tolerances stated in Note 5 above. Package and label shim packs by panel point and by uphill or downhill suspender.
7. For shim details, see "Suspender Bracket Details No.2" & "Suspender Bracket Details No.6" sheets.
8. All corners shall be ground smooth prior to galvanization.
9. 1 At the Contractor's option, some or all shims may be provided in imperial units.

100 % PS&E

CONTRACT CHANGE ORDER NO. ____
SHEET ____ OF ____

REQUESTS FOR INFORMATION NOT ADDRESSED IN THIS CCO REMAIN IN FORCE

R. Valizadeh/V. Toan/Y.L./W.L./F.C.
DESIGN OVERSIGHT
Roya Valizadeh / Vong Toan / Y. Liu
SIGN OFF DATE 07/27/12

MARK	DATE	DESCRIPTIONS	BY	CH'D	CCO#
1	07/27/12	SUSPENSION SYSTEM SHIMS	GB	MN	240
0	04/05/12	SUSPENSION SYSTEM SHIMS	GB	MN	240

REVISIONS

	BY	CHECKED
DESIGN	G. Baker	M. Nader
DETAILS	G. Baker	M. Nader
QUANTITIES	G. Baker	M. Nader

PREPARED FOR THE STATE OF CALIFORNIA DEPARTMENT OF TRANSPORTATION

ALL DIMENSIONS ARE IN MILLIMETERS UNLESS OTHERWISE SHOWN

R. Manzanarez
PROJECT ENGINEER

BRIDGE NO. 34-0006L/R
KILOMETER POST 13.2/13.9

SAN FRANCISCO OAKLAND BAY BRIDGE
EAST SPAN SEISMIC SAFETY PROJECT
SELF-ANCHORED SUSPENSION BRIDGE
(SUPERSTRUCTURE & TOWER)

SUSPENDER BRACKET DETAILS NO. 10

Rev. Date: 5-18-98

ORIGINAL SCALE IN MILLIMETERS FOR REDUCED PLANS 0 10 20 30 40 50 60 70 80 90 100

CU 04
EA 0120F1

DISREGARD PRINTS BEARING EARLIER REVISION DATES 04/05/12

REVISION DATES (PRELIMINARY STAGE ONLY)

SHEET 336S3R1 OF

FILE => L:\BB\04-012001\SAS\Contract Plans and CCO\CCO\CCO#240\5-Update 07-27-12\DGN\agsad13e.dgn

USERNAME => DWinrow DATE PLOTTED => 27 JUL 2012 TIME PLOTTED => 11:05:29

DIST.	COUNTY	ROUTE	KILOMETER POST TOTAL PROJECT	SHEET NO.	TOTAL SHEETS
04	SF	80	13.2/13.9	769S1	1204

REGISTERED ENGINEER - CIVIL

05-09-12

PLANS APPROVAL DATE

REGISTERED PROFESSIONAL ENGINEER Marwan N. Nader No. C 054426 Exp. 12/31/13 CIVIL STATE OF CALIFORNIA

The State of California or its officers or agents shall not be responsible for the accuracy or completeness of electronic copies of this plan sheet.

T.Y. LIN / MOFFATT & NICHOL
825 BATTERY STREET
SAN FRANCISCO, CA 94111

Caltrans now has a web site! To get to the web site, go to: http://www.dot.ca.gov

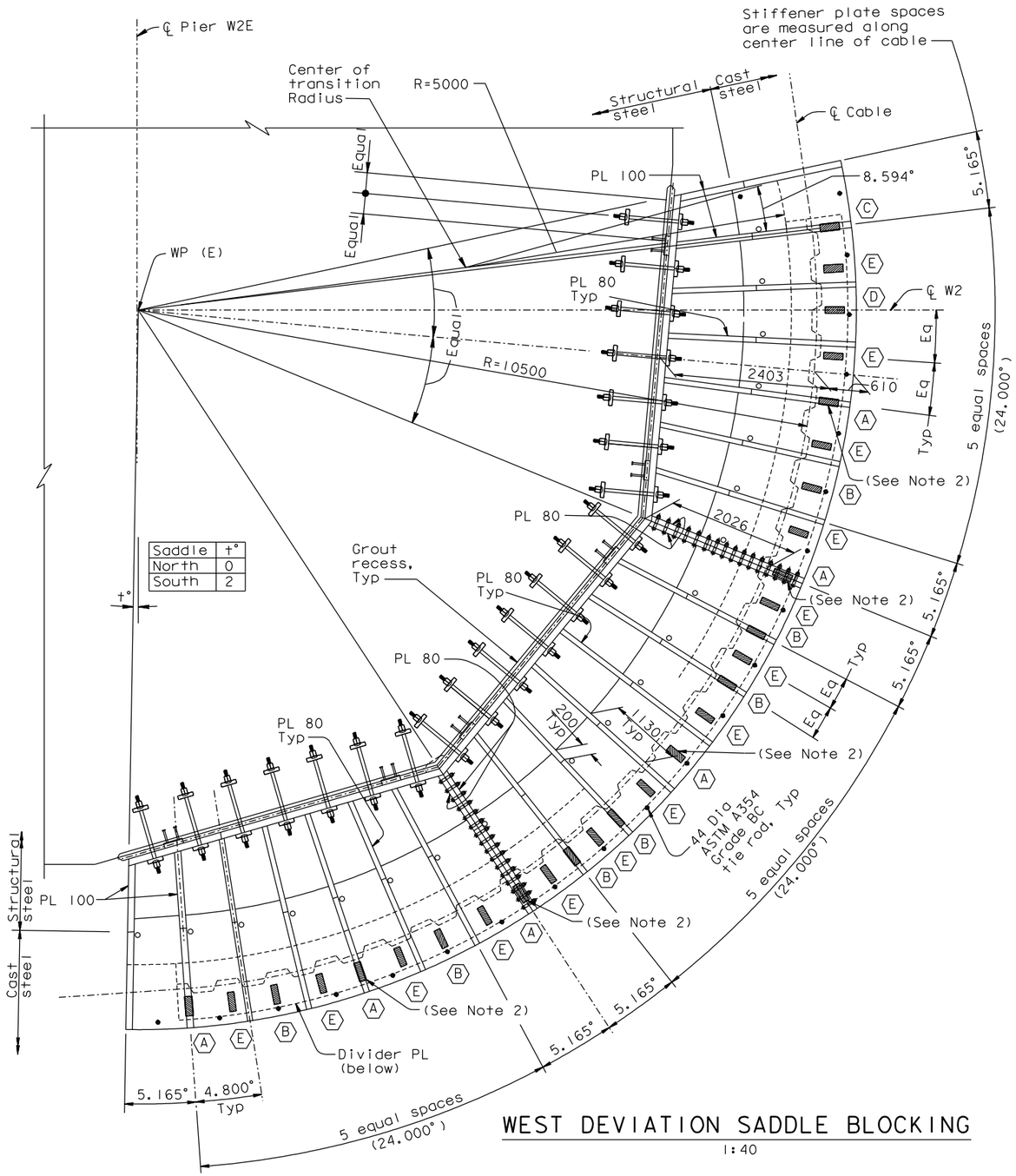

Saddle	t°
North	0
South	2

WEST DEVIATION SADDLE BLOCKING

1:40

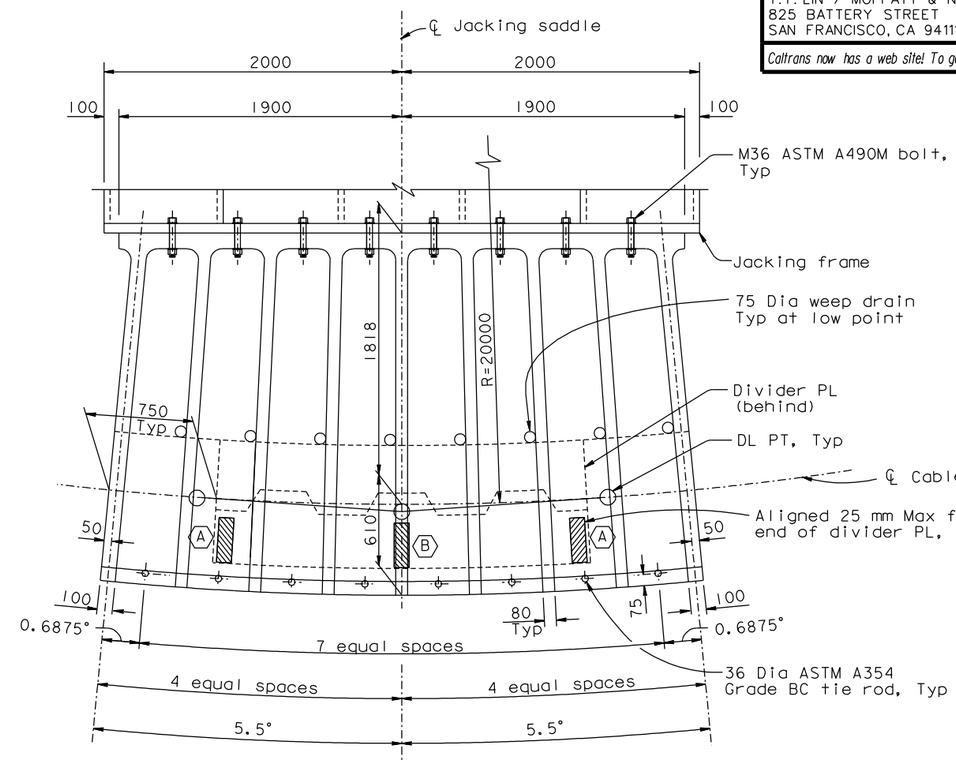

JACKING SADDLE BLOCKING

1:20

LEGEND:

- Location of Saddle Blocking
- (A) Blocking Type

NOTES:

1. For blocking types and details, see "West Deviation Saddle Details No. 7" sheet.
2. Blocking at these locations shall straddle the as-built divider plate radial joint.

CONTRACT CHANGE ORDER NO. _____
SHEET ____ OF ____

REQUESTS FOR INFORMATION NOT ADDRESSED IN THIS CCO REMAIN IN FORCE

ALL DIMENSIONS ARE IN MILLIMETERS UNLESS OTHERWISE SHOWN

R. Valizadeh/V. Toan/Y.L./W.L./F.C.
DESIGN OVERSIGHT
Roya Valizadeh / Vong Toan / Y. Liu
SIGN OFF DATE 05/09/12

MARK	DATE	DESCRIPTIONS	BY	CH'D	CCO#
0	05/09/12	SADDLE BLOCKING	GB	MN	240

REVISIONS

	BY	CHECKED
DESIGN	G. Baker	M. Nader
DETAILS	G. Baker	M. Nader
QUANTITIES	G. Baker	M. Nader

PREPARED FOR THE STATE OF CALIFORNIA DEPARTMENT OF TRANSPORTATION

R. Manzanarez
PROJECT ENGINEER

BRIDGE NO. 34-0006L/R
KILOMETER POST 13.2/13.9

SAN FRANCISCO OAKLAND BAY BRIDGE
EAST SPAN SEISMIC SAFETY PROJECT
SELF-ANCHORED SUSPENSION BRIDGE
(SUPERSTRUCTURE & TOWER)

WEST DEVIATION SADDLE DETAILS NO. 6

Rev. Date: 5-18-98

ORIGINAL SCALE IN MILLIMETERS FOR REDUCED PLANS 0 10 20 30 40 50 60 70 80 90 100

CU 04
EA 0120F1

DISREGARD PRINTS BEARING EARLIER REVISION DATES 05/09/12

REVISION DATES (PRELIMINARY STAGE ONLY)

SHEET 352S1 OF

FILE => L:\BB\04-0120F1\SAS\Contract Plans and CCO\CCO\CCO#240\3-Update 05-09-12\DGN\agsdd05a.dgn

100% PS&E

USERNAME => DWinrow DATE PLOTTED => 09 MAY 2012 TIME PLOTTED => 11:55:41

DIST.	COUNTY	ROUTE	KILOMETER POST TOTAL PROJECT	SHEET NO.	TOTAL SHEETS
04	SF	80	13.2/13.9	769S2	1204

REGISTERED ENGINEER - CIVIL

05-07-12

PLANS APPROVAL DATE

REGISTERED PROFESSIONAL ENGINEER Marwan N. Nader No. C 054426 Exp. 12/31/13 CIVIL STATE OF CALIFORNIA

The State of California or its officers or agents shall not be responsible for the accuracy or completeness of electronic copies of this plan sheet.

T.Y. LIN / MOFFATT & NICHOL
825 BATTERY STREET
SAN FRANCISCO, CA 94111

Caltrans now has a web site! To get to the web site, go to: http://www.dot.ca.gov

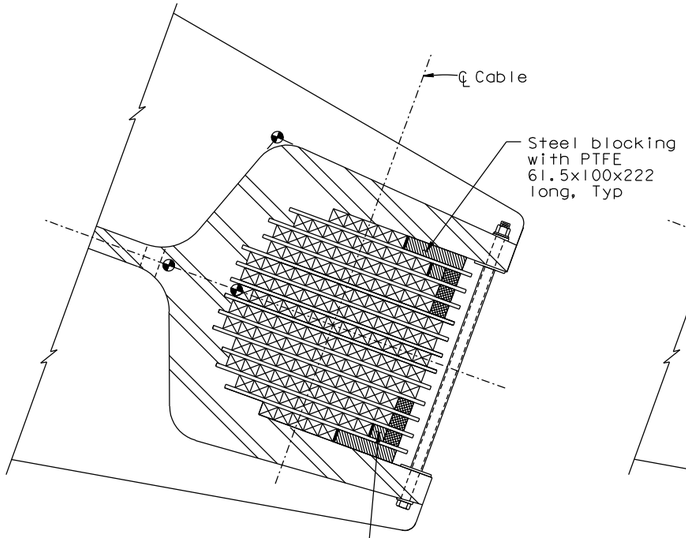

TYPE A BLOCKING
NTS

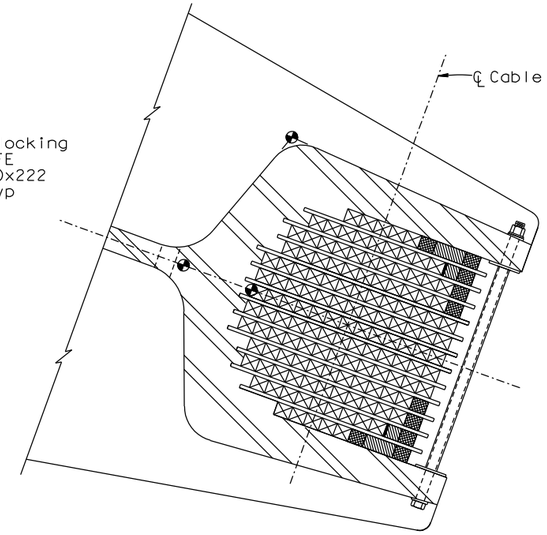

TYPE B BLOCKING
NTS

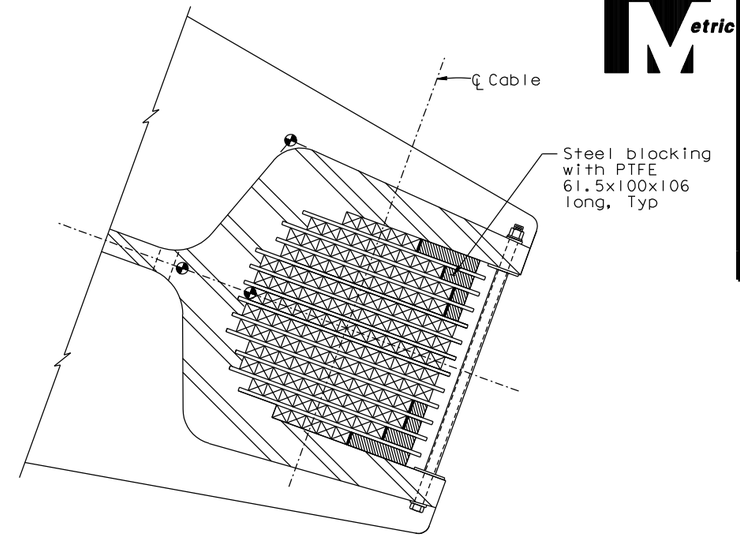

TYPE C BLOCKING
NTS

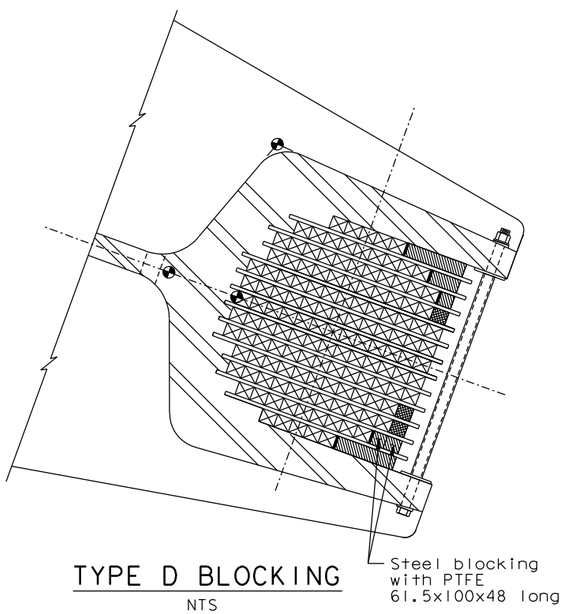

TYPE D BLOCKING
NTS

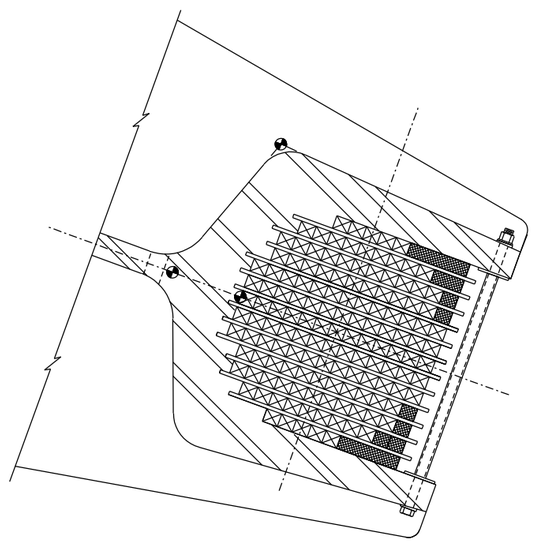

TYPE E BLOCKING
NTS

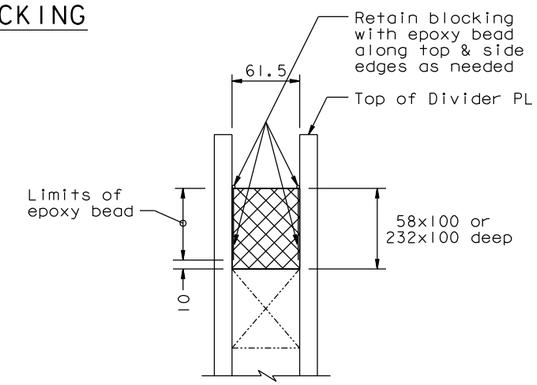

UHMWP BLOCKING DETAIL
1:2.5
(See Note 2)

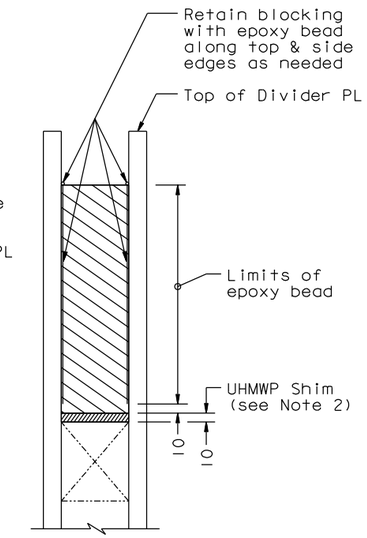

STEEL BLOCKING DETAIL
1:2.5
(See Note 1)

LEGEND:

- Steel Blocking (See Note 1)
- UHMWP Blocking (See Note 2)

NOTES:

1. Steel blocking fabricated for Tower saddle shall be used for West deviation and jacking saddles.
2. At the Contractor's option, hardwood shims and blocking may be used in lieu of UHMWP.
3. The completed blocking at each location is fabricated to fit tightly. Should tight fit not be achieved, the Contractor shall inform the Engineer for evaluation.

CONTRACT CHANGE ORDER NO. ____
SHEET ____ OF ____

REQUESTS FOR INFORMATION NOT ADDRESSED IN THIS CCO REMAIN IN FORCE

ALL DIMENSIONS ARE IN MILLIMETERS UNLESS OTHERWISE SHOWN

R. Valizadeh/V. Toan/Y.L./W.L./F.C.
DESIGN OVERSIGHT
SIGN OFF DATE 05/07/12

MARK	DATE	DESCRIPTIONS	BY	CH'D	CCO#
0	05/07/12	SADDLE BLOCKING	GB	MN	240

REVISIONS

	BY	CHECKED
DESIGN	G. Baker	M. Nader
DETAILS	G. Baker	M. Nader
QUANTITIES	G. Baker	M. Nader

PREPARED FOR THE STATE OF CALIFORNIA DEPARTMENT OF TRANSPORTATION

R. Manzanarez
PROJECT ENGINEER

BRIDGE NO. 34-0006L/R
KILOMETER POST 13.2/13.9

SAN FRANCISCO OAKLAND BAY BRIDGE
EAST SPAN SEISMIC SAFETY PROJECT
SELF-ANCHORED SUSPENSION BRIDGE
(SUPERSTRUCTURE & TOWER)

WEST DEVIATION SADDLE DETAILS NO. 7

Rev. Date: 5-18-98

ORIGINAL SCALE IN MILLIMETERS FOR REDUCED PLANS 0 10 20 30 40 50 60 70 80 90 100

CU 04
EA 0120F1

DISREGARD PRINTS BEARING EARLIER REVISION DATES 05/07/12

REVISION DATES (PRELIMINARY STAGE ONLY)

SHEET 352S2 OF

FILE => L:\BB\04-012001\SAS\Contract Plans and CCO\CCO\CCO#240\2-Revision 05-07-12\DGN\agsdd05b.dgn

USERNAME => arivera DATE PLOTTED => 07 MAY 2012 TIME PLOTTED => 11:04:45

100% PS&E

DIST.	COUNTY	ROUTE	KILOMETER POST TOTAL PROJECT	SHEET NO.	TOTAL SHEETS
04	SF	80	13.2/13.9	777R2	1204

Caltrans Metric

REGISTERED ENGINEER - CIVIL

12-6-04
PLANS APPROVAL DATE

REGISTERED PROFESSIONAL ENGINEER Marwan N. Nader No. C 054426 Exp. 12/31/13 CIVIL STATE OF CALIFORNIA

The State of California or its officers or agents shall not be responsible for the accuracy or completeness of electronic copies of this plan sheet.

T.Y. LIN / MOFFATT & NICHOL
825 BATTERY STREET
SAN FRANCISCO, CA 94111

Caltrans now has a web site! To get to the web site, go to: http://www.dot.ca.gov

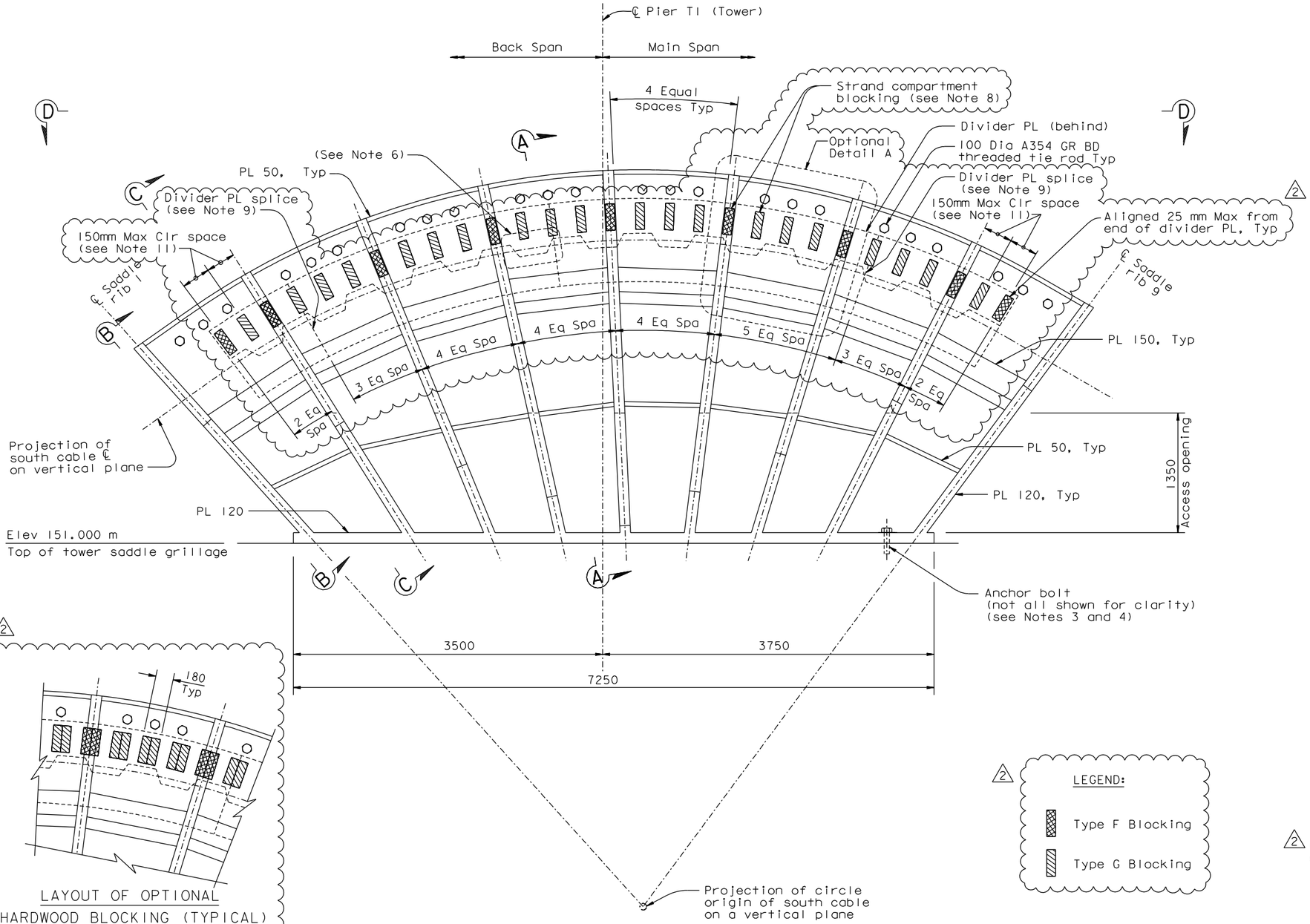

ELEVATION VIEW (Looking North)
1:25

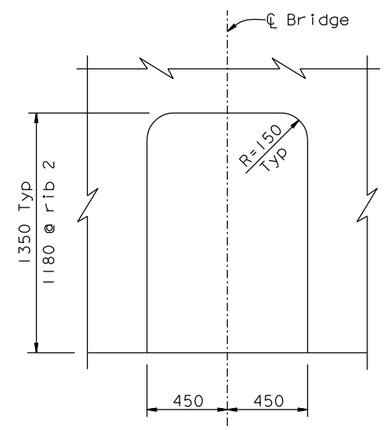

ACCESS OPENING DETAIL (See Note 5)
NTS

LAYOUT OF OPTIONAL HARDWOOD BLOCKING (TYPICAL)

OPTIONAL DETAIL A
1:25

LEGEND:

Type F Blocking

Type G Blocking

1. For Section A-A, Section B-B and Section C-C, see "Tower Saddle Details No.5" sheet.
2. For tower saddle grillage details, see "Tower Saddle Grillage Details" sheets.
3. For anchor bolt layout, see "Tower Saddle Grillage Details No.8" sheet.
4. Anchor bolt hole location shall be cross checked with the tower saddle grillage plates layout before drilling the holes. Bolt edge distance and clearance for tightening shall be verified and submitted for review and approval by the Engineer.
5. Access openings are located at saddle ribs 2 to 8.
6. For detail of divider PL joint, see "West Deviation Saddle Details No.3" sheet.
7. For View D-D, see "Tower Saddle Details No.5B" sheet.
8. Contractor shall fabricate and install new blocking. For layout, see "Tower Saddle Details No.5B" sheet. For blocking details, see "Tower Saddle Details No.6" sheet.
9. The blocking shall be placed such that it straddles the divider plate spacing joint.
10. At the Contractor's option, hardwood blocking may be installed and left in place through load transfer. Hardwood blocking shall be installed in widths of 180 mm, and cut on site to fit tightly at each blocking location. After load transfer, hardwood blocking shall be left in place or replaced as directed by the Engineer.
11. Where clear distance adjacent to G blocking exceeds 150 mm, the Contractor shall install additional 90 mm wide Type G blocking in the space.

CONTRACT CHANGE ORDER NO. _____
SHEET ____ OF ____

REQUESTS FOR INFORMATION NOT ADDRESSED IN THIS CCO REMAIN IN FORCE

ALL DIMENSIONS ARE IN MILLIMETERS UNLESS OTHERWISE SHOWN

R. Valizadeh/V. Toan/Y.L./W.L./F.C.
DESIGN OVERSIGHT
Ryan Valizadeh / Vong Toan / Y. Liu
SIGN OFF DATE 05/09/12

MARK	DATE	DESCRIPTIONS	BY	CH'D	CCO#
2	05/09/12	SADDLE BLOCKING	GB	MN	240
1	10/31/08	TOWER HEAD DETAILS	MN	GB	93

REVISIONS

	BY	CHECKED
DESIGN	M. Nader	J. Kuliki
DETAILS	L. Rus	T. McMeans
QUANTITIES	L. Rus	D. Harrison

PREPARED FOR THE STATE OF CALIFORNIA DEPARTMENT OF TRANSPORTATION

R. Manzanarez
PROJECT ENGINEER

BRIDGE NO. 34-0006L/R
KILOMETER POST 13.2/13.9

SAN FRANCISCO OAKLAND BAY BRIDGE
EAST SPAN SEISMIC SAFETY PROJECT
SELF-ANCHORED SUSPENSION BRIDGE
(SUPERSTRUCTURE & TOWER)

TOWER SADDLE DETAILS NO. 4

Rev. Date: 5-18-98

ORIGINAL SCALE IN MILLIMETERS FOR REDUCED PLANS 0 10 20 30 40 50 60 70 80 90 100

CU 04
EA 0120F1

DISREGARD PRINTS BEARING EARLIER REVISION DATES

REVISION DATES (PRELIMINARY STAGE ONLY) 01/15/99 08/02/99 05/31/01 04/08/02 07/24/02 12/18/02 09/06/04

SHEET 360R1C OF

FILE => L:\BB\04-012001\SAS\Contract Plans and CCO\CCO\CCO#240\3-Update 05-09-12\DGN\agtsd04.dgn

USERNAME => DWinrow DATE PLOTTED => 09 MAY 2012 TIME PLOTTED => 11:57:13

100% PS&E

DIST.	COUNTY	ROUTE	KILOMETER POST TOTAL PROJECT	SHEET NO.	TOTAL SHEETS
04	SF	80	13.2/13.9	778S2R1	1204

REGISTERED ENGINEER - CIVIL

10-31-08
PLANS APPROVAL DATE

REGISTERED PROFESSIONAL ENGINEER Marwan N. Nader No. C 054426 Exp. 12/31/13 CIVIL STATE OF CALIFORNIA

The State of California or its officers or agents shall not be responsible for the accuracy or completeness of electronic copies of this plan sheet.

T.Y. LIN / MOFFATT & NICHOL
825 BATTERY STREET
SAN FRANCISCO, CA 94111

Caltrans now has a web site! To get to the web site, go to: http://www.dot.ca.gov

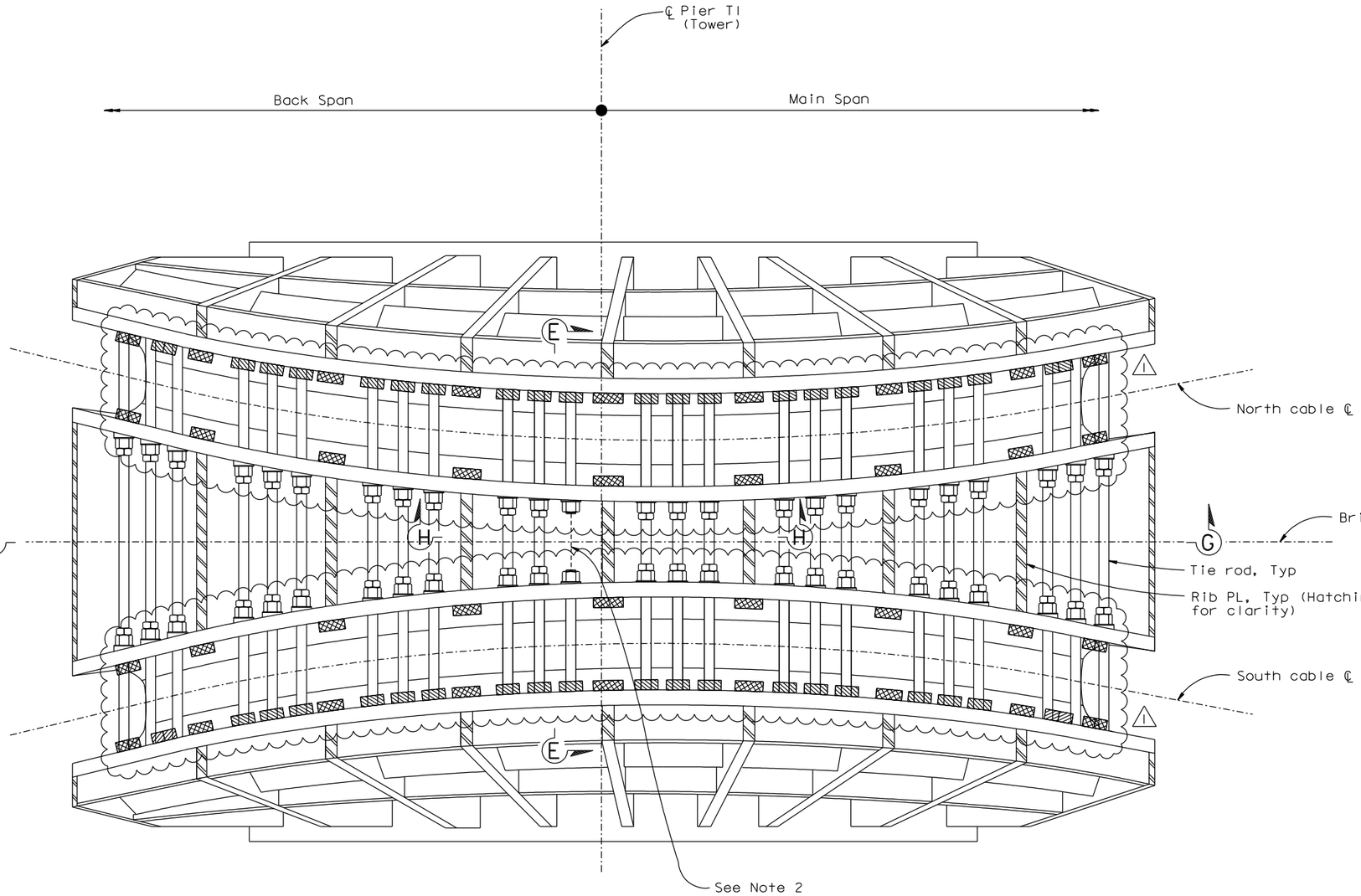

VIEW D-D
1:25

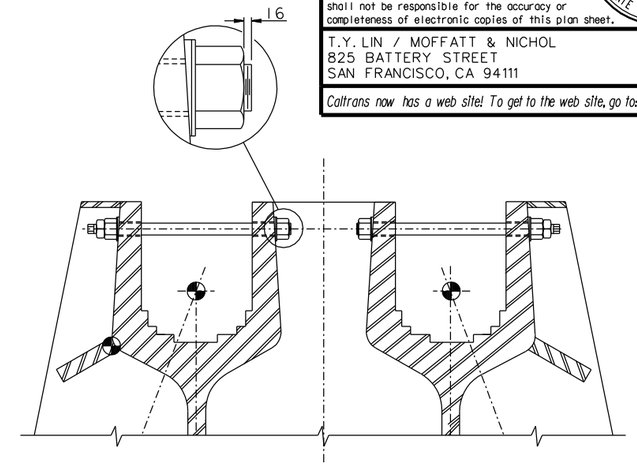

SECTION E-E (for details not shown, see Section A-A)
1:25

LEGEND:

- Type F Blocking
- Type G Blocking

NOTES:

1. For Section G-G, see "Tower Access Details No.23" sheet. For Section H-H, see "Tower Saddle Details No.5A" sheet.
2. Tie rod is discontinuous between saddle troughs at this location only.
3. For blocking, see "Tower Saddle Details No.6" sheet.

CONTRACT CHANGE ORDER NO. _____
SHEET ____ OF ____

REQUESTS FOR INFORMATION NOT ADDRESSED IN THIS CCO REMAIN IN FORCE

ALL DIMENSIONS ARE IN MILLIMETERS UNLESS OTHERWISE SHOWN

R. Valizadeh/V. Toan/Y.L./W.L./F.C.
DESIGN OVERSIGHT
Raya Valizadeh / Vong Toan / Y. Liu
SIGN OFF DATE 05/07/12

MARK	DATE	DESCRIPTIONS	BY	CH'D	CCO#
1	05/07/12	SADDLE BLOCKING	GB	MN	240
0	10/31/08	TOWER HEAD DETAILS	NV	MN	93

REVISIONS

	BY	CHECKED
DESIGN	N. Vo	M. Nader
DETAILS	N. Vo	M. Nader
QUANTITIES	N. Vo	M. Nader

PREPARED FOR THE STATE OF CALIFORNIA DEPARTMENT OF TRANSPORTATION

R. Manzanarez
PROJECT ENGINEER

BRIDGE NO. 34-0006L/R
KILOMETER POST 13.2/13.9

SAN FRANCISCO OAKLAND BAY BRIDGE
EAST SPAN SEISMIC SAFETY PROJECT
SELF-ANCHORED SUSPENSION BRIDGE
(SUPERSTRUCTURE & TOWER)

TOWER SADDLE DETAILS NO. 5B

Rev. Date: 5-18-98

ORIGINAL SCALE IN MILLIMETERS FOR REDUCED PLANS 0 10 20 30 40 50 60 70 80 90 100

CU 04
EA 0120F1

DISREGARD PRINTS BEARING EARLIER REVISION DATES 10/31/08

REVISION DATES (PRELIMINARY STAGE ONLY)

SHEET 361S2R1 OF

FILE => I:\bb\04-012001\sas\contract plans and cco\cco\cco#240\2-revision 05-07-12\dgn\agtsd05b.dgn

USERNAME => arivera DATE PLOTTED => 07 MAY 2012 TIME PLOTTED => 15:42:03

100% PS&E

DIST.	COUNTY	ROUTE	KILOMETER POST TOTAL PROJECT	SHEET NO.	TOTAL SHEETS
04	SF	80	13.2/13.9	779R1	1204

REGISTERED ENGINEER - CIVIL

12-6-04
PLANS APPROVAL DATE

REGISTERED PROFESSIONAL ENGINEER Marwan N. Nader No. C 054426 Exp. 12/31/13 CIVIL STATE OF CALIFORNIA

The State of California or its officers or agents shall not be responsible for the accuracy or completeness of electronic copies of this plan sheet.

T.Y. LIN / MOFFATT & NICHOL
825 BATTERY STREET
SAN FRANCISCO, CA 94111

Caltrans now has a web site! To get to the web site, go to: http://www.dot.ca.gov

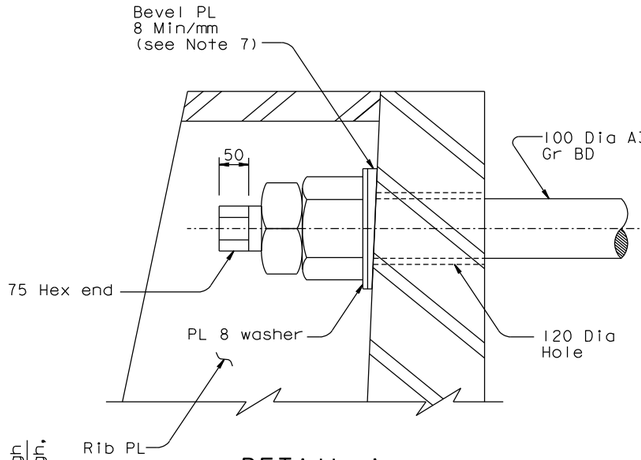

DETAIL A
1:5

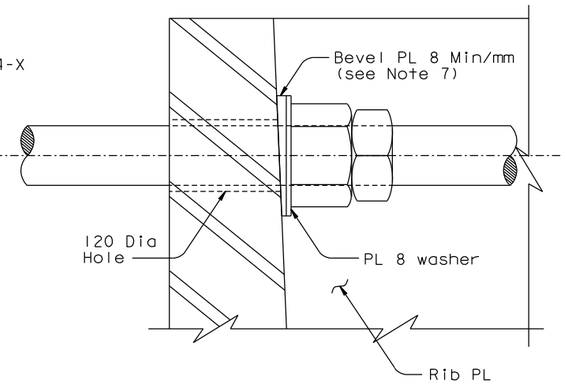

DETAIL B
1:5

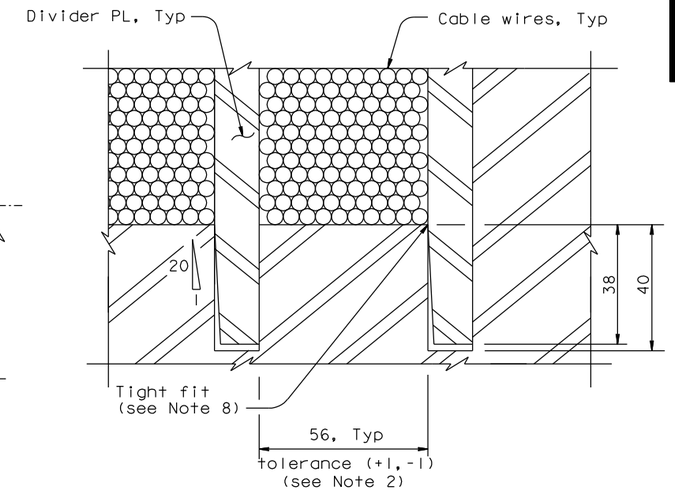

DETAIL C
1:1

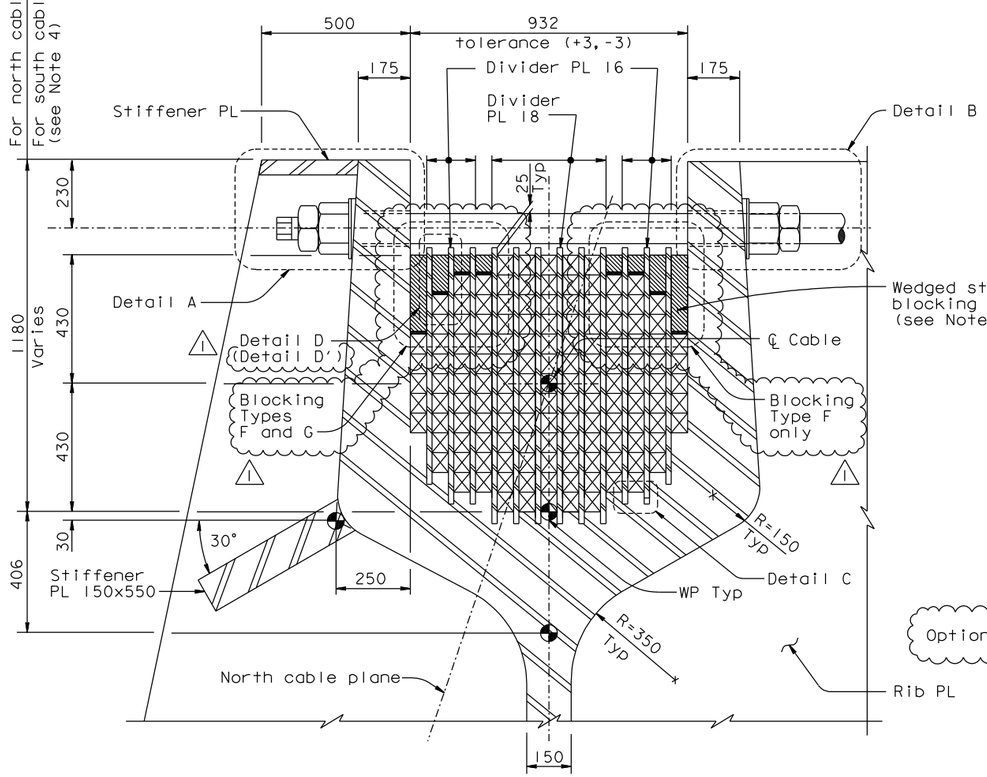

TROUGH GEOMETRY DEFINITION
1:10

(North trough shown, South trough similar)

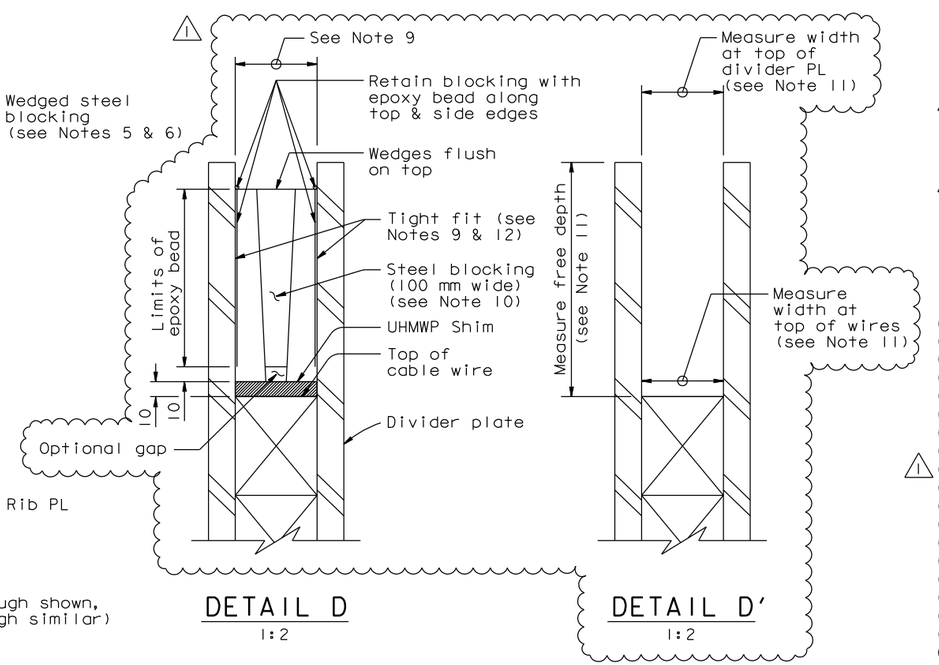

DETAIL D
1:2

DETAIL D'
1:2

NOTES:

1. All dimensions in this sheet are shown in the plane normal to the cable center line, see "Tower Saddle Details No.1" sheet.
2. The trough width, including all dividers and compartments, shall be 932 (tolerance +3,-3).
3. Divider plates shall be tapered 5% in grooves cut to permit tight insertion.
4. The height of the south cable trough varies in order to match the height of the north cable trough.
5. Wedged steel blocking layout shall be as shown on "Tower Saddle Details No.5B" sheet. Steel shall be ASTM A572. All surfaces of steel shall be primed.
6. Surfaces of wedged steel plates against the divider plates shall have PTFE film (0.5 mm thick).
7. In lieu of the bevel PL, the Contractor may counterbore the casting up to 12 mm to form a level bearing surface for the nut and washer.
8. The tapered faces of the divider plates shall be placed facing the centerline of the bridge.
9. Prior to fabrication of new blocking, the Contractor shall measure as-built compartment widths. The blocking shall be fabricated to fit tightly at top and bottom within the as-built compartment dimensions.
10. At the Contractor's option, the steel blocking may be fabricated in several pieces. The taper of any piece shall not exceed 1:20. Provide adhesive between surfaces of blocking pieces.
11. Tower Saddle survey (see Detail D'):
    - Measure compartment width at top & bottom
    - Measure compartment depth
    - Measure at each blocking sections Type F & G
    - At each section, measure all 13 compartments
12. The completed blocking at each location is fabricated to fit tightly. Should tight fit not be achieved, the Contractor shall inform the Engineer for evaluation.

CONTRACT CHANGE ORDER NO. _____
SHEET ___ OF ___

REQUESTS FOR INFORMATION NOT ADDRESSED IN THIS CCO REMAIN IN FORCE

ALL DIMENSIONS ARE IN MILLIMETERS UNLESS OTHERWISE SHOWN

R. Valizadeh/V. Toan/Y.L./W.L./F.C.
DESIGN OVERSIGHT
SIGN OFF DATE 05/07/12

MARK	DATE	DESCRIPTIONS	BY	CH'D	CCO#
1	05/07/12	SADDLE BLOCKING	GB	MN	240

REVISIONS

DESIGN	BY M. Nader	CHECKED J. Kuliki	
DETAILS	BY L. Rus	CHECKED T. McMeans	
QUANTITIES	BY L. Rus	CHECKED D. Harrison	

PREPARED FOR THE STATE OF CALIFORNIA DEPARTMENT OF TRANSPORTATION

R. Manzanarez
PROJECT ENGINEER

BRIDGE NO. 34-0006L/R
KILOMETER POST 13.2/13.9

SAN FRANCISCO OAKLAND BAY BRIDGE
EAST SPAN SEISMIC SAFETY PROJECT
SELF-ANCHORED SUSPENSION BRIDGE
(SUPERSTRUCTURE & TOWER)

TOWER SADDLE DETAILS NO.6

Rev. Date: 5-18-98

ORIGINAL SCALE IN MILLIMETERS FOR REDUCED PLANS 0 10 20 30 40 50 60 70 80 90 100

CU 04
EA 0120F1

DISREGARD PRINTS BEARING EARLIER REVISION DATES

REVISION DATES (PRELIMINARY STAGE ONLY): 08/20/99 05/31/01 04/08/02 04/26/02 01/07/02 12/19/02 09/08/04 10/13/05

SHEET 362R1 OF

FILE => L:\BB\04-012001\SAS\Contract Plans and CCO\CCO\CCO#240\2-Revision 05-07-12\DGN\agtsd06.dgn

100% PS&E

DATE PLOTTED => 07 MAY 2012 TIME PLOTTED => 11:02:23

USERNAME => arivera

Caltrans now has a web site! To get to the web site, go to: http://www.dot.ca.gov

DIST.	COUNTY	ROUTE	KILOMETER POST TOTAL PROJECT	SHEET NO.	TOTAL SHEETS
04	SF	80	13.2/13.9	786R2	1204

Caltrans Metric

George Baker
REGISTERED ENGINEER - CIVIL
12-6-04
PLANS APPROVAL DATE

REGISTERED PROFESSIONAL ENGINEER George S. Baker No. C 57112 Exp. 12/31/05 CIVIL STATE OF CALIFORNIA

The State of California or its officers or agents shall not be responsible for the accuracy or completeness of electronic copies of this plan sheet.

T.Y. LIN / MOFFATT & NICHOL
825 BATTERY STREET
SAN FRANCISCO, CA 94111

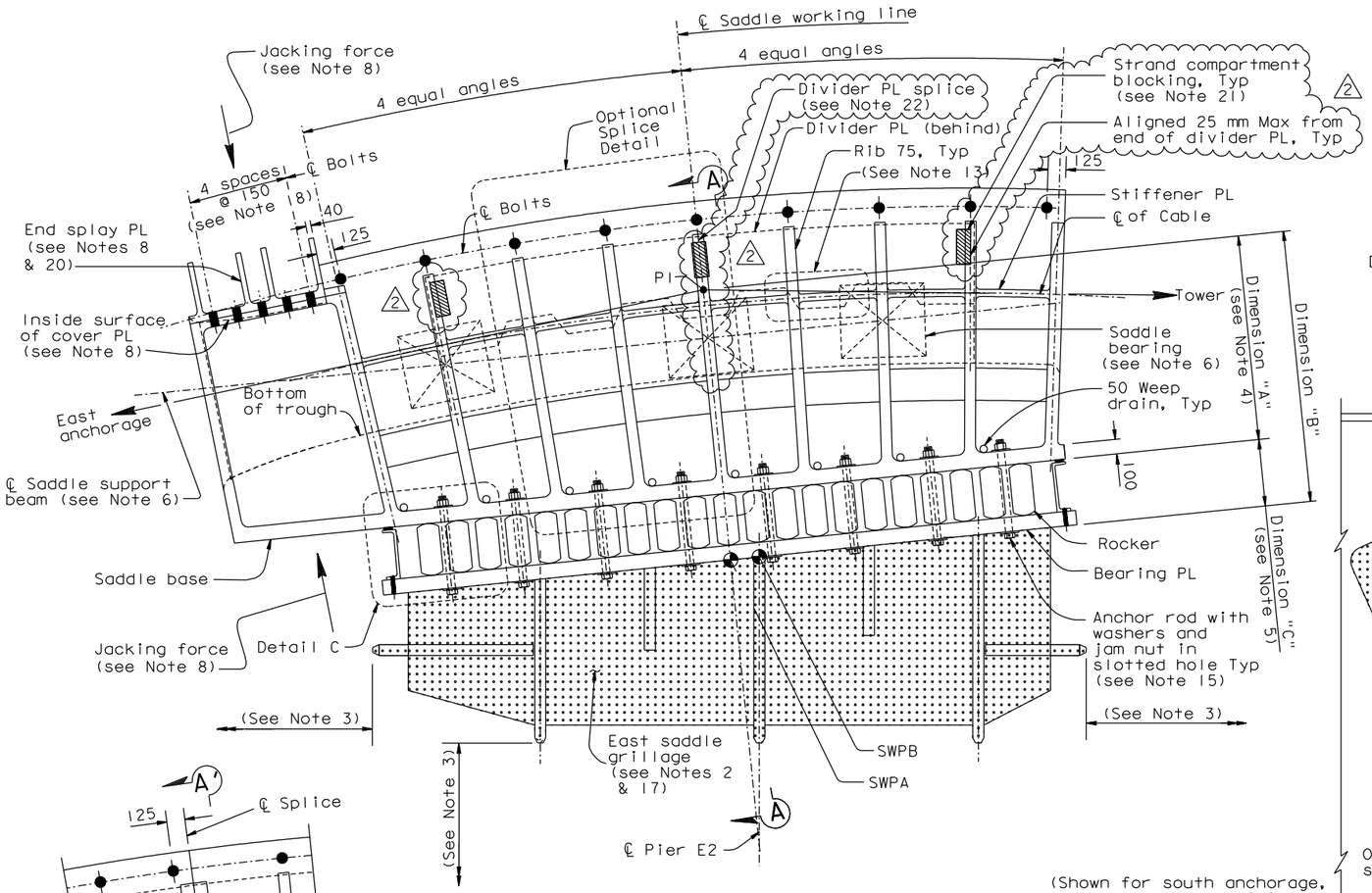

ELEVATION OF TYPICAL EAST SADDLE (IN THE PLANE OF CABLE) (See Note 6)

1:20

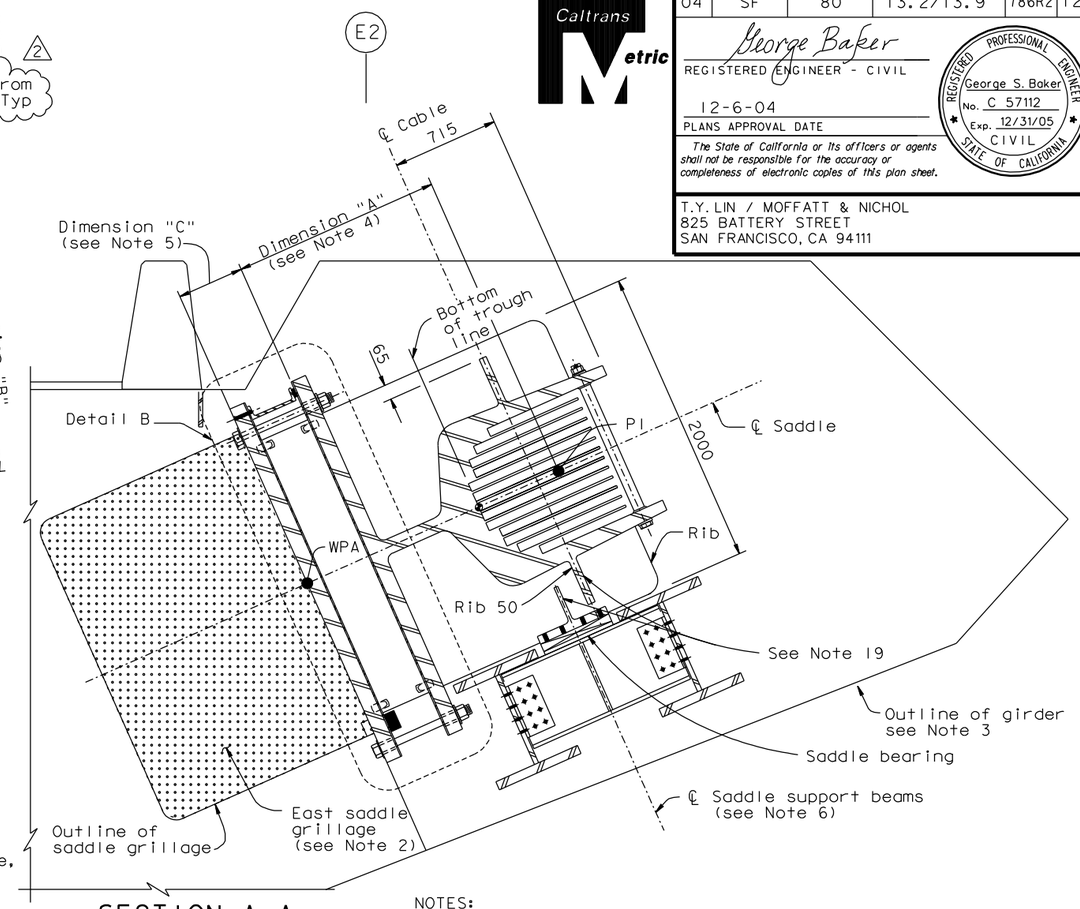

(Shown for south anchorage, north anchorage similar and opposite hand)

SECTION A-A

1:20

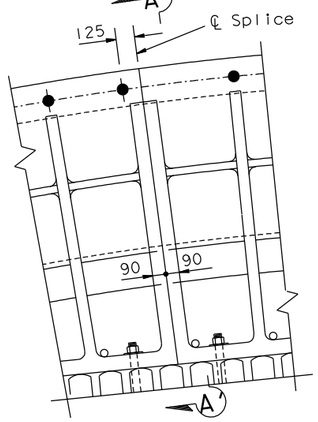

OPTIONAL SPLICE DETAIL

1:20

20. At the Contractor's option, it is acceptable to incorporate permanent diaphragm plates at the end splay plate, subject to review and approval of the Engineer.

21. The Contractor shall fabricate and install new blocking. For typical blocking, see Section A-A on "East Saddle Details No.5" sheet. For typical blocking details, see "East Saddle Details No.5A" sheet.

22. The blocking shall be placed such that it straddles the divider plate splicing joint.

12. All divider plates shall be hot dip galvanized with Class A coating.
13. For detail of Divider PL joint, see "West Deviation Sadddle Details No.3" sheet.
14. In the bolted splices the flatness of the faying surfaces shall be ±0.5 mm per meter, and the gap between them shall not exceed 0.5 mm per meter. The perimeters of faying surfaces shall be caulked.
15. Slotted holes may be placed in bearing PL or saddle base PL.
16. The Contractor may propose holes and attachments for erection, subject to review and approval of the Engineer. Upon erection completion, all holes shall be filled with bolts.
17. It is acceptable to align the ends of grillage PL A with a projection of the centerline of the outmost saddle ribs, subject to review and approval of the Engineer.
18. Spacing may be adjusted to accomodate jacking, subject to review and approval of the Engineer.
19. It is acceptable to extend the saddle rib to the saddle bearing plate in lieu of the bearing plate web extension subject to review and approval of the Engineer. Where the offset between the saddle rib and the support beam centerlines exceeds 60 mm, the bearing plate shall be thickened to 60 mm.

NOTES:

1. For Section A'-A', Details B and C, see "East Saddle Details No.6" sheet.
2. For east saddle grillage details, see "Girder At Pier E2 No.5" sheet.
3. For girder details at the east saddle, see "Girder At Pier E2" sheets.
4. For dimension "A", see "East Saddle Details No.2" sheet.
5. For dimension "C", see "East Saddle Details No.6" sheet.
6. For saddle bearings and saddle beam support details, see "East Saddle Details No.7" sheet.
7. For the plane of the cable, see "East Saddle Details No.1" and "East Saddle Details No.2" sheets.
8. End splay plate shall be pressed into place by jacking and bolted to the saddle after completion of cable erection and before load transfer to cable. Total jacking capacity shall be at least 1.9 MN. For end splay PL details, see "East Saddle Details No.5" sheet.
9. Bearing surfaces of rockers shall be finished to ANSI 250 surface roughness. Rocker bearing surfaces shall be finished to ANSI 250 and shall be finished flat to ±0.5 mm per meter of surface length.
10. All surfaces inside the trough shall be machined to ANSI 500 roughness. The geometric tolerance of the surfaces shall not exceed ±1.5 mm per meter of surfaces without sudden kinks.
11. The inside of the troughs shall be metallized with a coating thickness not less than 0.4 mm.

REGISTERED PROFESSIONAL ENGINEER Marwan N. Nader No. C 054426 Exp. 12/31/13 CIVIL STATE OF CALIFORNIA

FOR REVISIONS ONLY

CONTRACT CHANGE ORDER NO. _____
SHEET ____ OF ____

REQUESTS FOR INFORMATION NOT ADDRESSED IN THIS CCO REMAIN IN FORCE

ALL DIMENSIONS ARE IN MILLIMETERS UNLESS OTHERWISE SHOWN

R. Valizadeh/V. Toan/Y.L./W.L./F.C.
DESIGN OVERSIGHT
Roya Valizadeh / Vong Toan / Y. Liu
SIGN OFF DATE 05/09/12

MARK	DATE	DESCRIPTIONS	BY	CH'D	CCO#
2	05/09/12	SADDLE BLOCKING	GB	MN	240
1	09/01/11	EAST END OBG	GB	MN	87

REVISIONS

DESIGN	BY G. Baker	CHECKED J. Kuliki	
DETAILS	BY R. Kanitkar	CHECKED T. McMeans	
QUANTITIES	BY D. Turner	CHECKED D. Harrison	

PREPARED FOR THE STATE OF CALIFORNIA DEPARTMENT OF TRANSPORTATION

R. Manzanarez
PROJECT ENGINEER

BRIDGE NO. 34-0006L/R
KILOMETER POST 13.2/13.9

SAN FRANCISCO OAKLAND BAY BRIDGE
EAST SPAN SEISMIC SAFETY PROJECT
SELF-ANCHORED SUSPENSION BRIDGE
(SUPERSTRUCTURE & TOWER)

EAST SADDLE DETAILS NO. 3

Rev. Date: 5-18-98

ORIGINAL SCALE IN MILLIMETERS FOR REDUCED PLANS 0 10 20 30 40 50 60 70 80 90 100

CU 04
EA 0120F1

DISREGARD PRINTS BEARING EARLIER REVISION DATES

REVISION DATES (PRELIMINARY STAGE ONLY) 05/15/99 08/02/99 05/31/01 04/08/02 07/01/02 12/13/02 11/13/05 12/07/05

SHEET 369R2 OF

FILE => I:\bb\04-012001\sas\contract plans and cco\cco\cco#240\3-update 05-09-12\dgn\agsddl1.dgn

100% PS&E

DATE PLOTTED => 09 MAY 2012 TIME PLOTTED => 11:58:06

USERNAME => DWinrow

Caltrans now has a web site! To get to the web site, go to: http://www.dot.ca.gov

DIST.	COUNTY	ROUTE	KILOMETER POST TOTAL PROJECT	SHEET NO.	TOTAL SHEETS
04	SF	80	13.2/13.9	788R1	1204

Caltrans Metric

REGISTERED ENGINEER - CIVIL

12-6-04
PLANS APPROVAL DATE

REGISTERED PROFESSIONAL ENGINEER Marwan N. Nader No. C 054426 Exp. 12/31/13 CIVIL STATE OF CALIFORNIA

The State of California or its officers or agents shall not be responsible for the accuracy or completeness of electronic copies of this plan sheet.

T.Y. LIN / MOFFATT & NICHOL
825 BATTERY STREET
SAN FRANCISCO, CA 94111

LEGEND:

Indicates zone with Level I testing requirements (30 mm from final interior and exterior surface of trough for entire length of saddle)

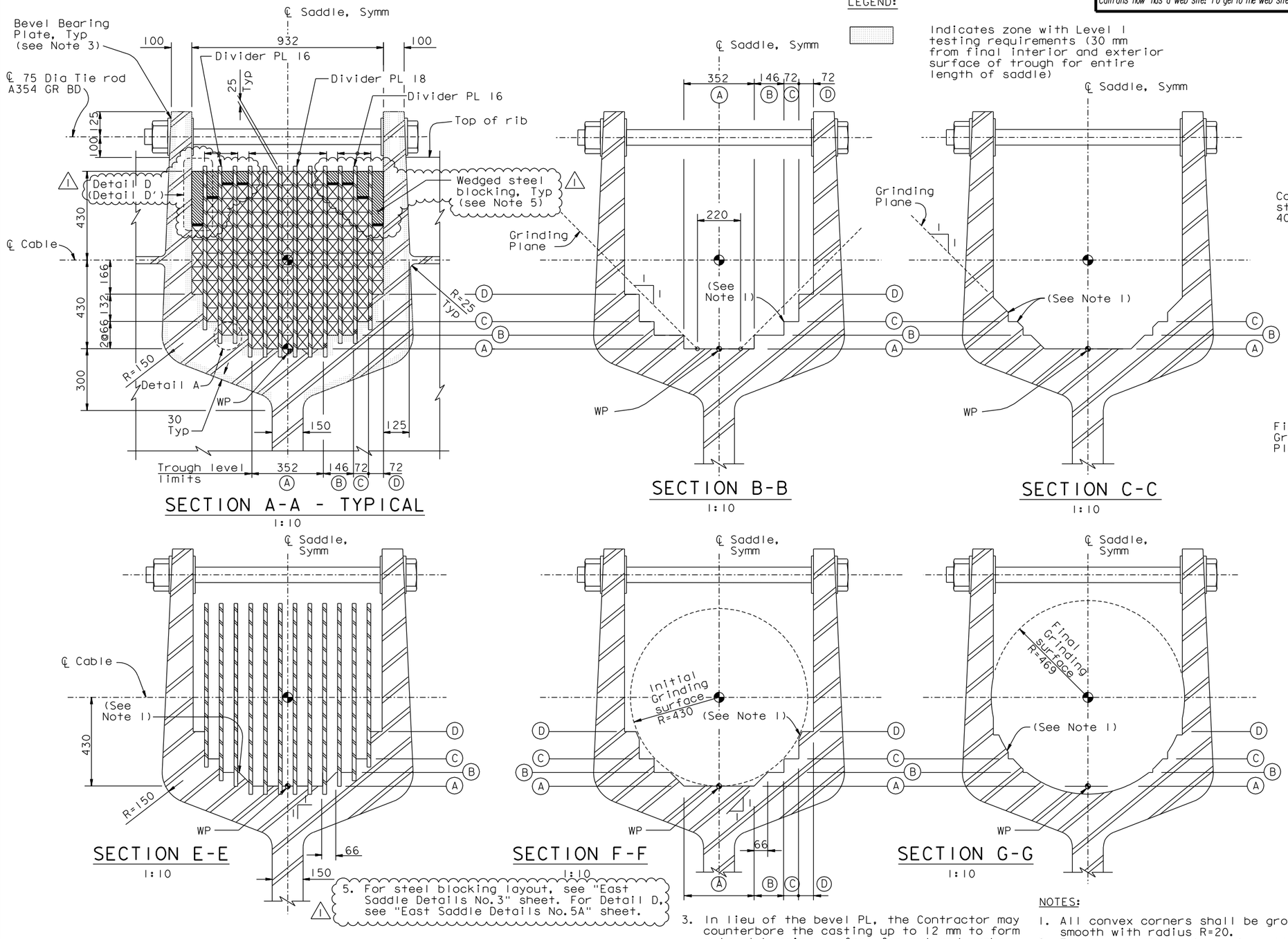

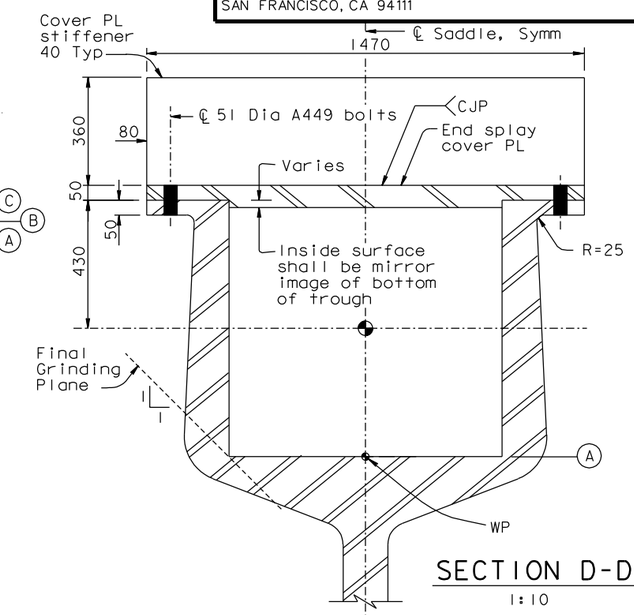

SECTION D-D
1:10

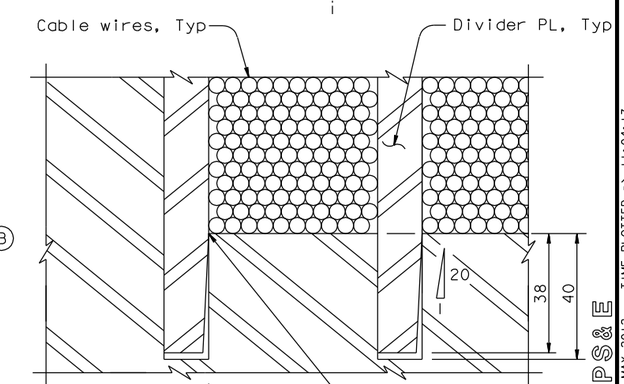

DETAIL A
1:1

5. For steel blocking layout, see "East Saddle Details No.3" sheet. For Detail D, see "East Saddle Details No.5A" sheet.

3. In lieu of the bevel PL, the Contractor may counterbore the casting up to 12 mm to form a level bearing surface for nut and washer.

4. The tapered faces of the divider plates shall be placed facing downwards.

NOTES:

1. All convex corners shall be ground smooth with radius R=20.
2. The trough width, including all dividers and compartments, shall be 932 (tolerance +3,-3).

ALL DIMENSIONS ARE IN MILLIMETERS UNLESS OTHERWISE SHOWN.

CONTRACT CHANGE ORDER NO. _____
SHEET ____ OF ____

REQUESTS FOR INFORMATION NOT ADDRESSED IN THIS CCO REMAIN IN FORCE

R. Valizadeh/V. Toan/Y.L./W.L./F.C.
DESIGN OVERSIGHT
SIGN OFF DATE 05/07/12

MARK	DATE	DESCRIPTIONS	BY	CH'D	CCO#
1	05/07/12	SADDLE BLOCKING	GB	MN	240

REVISIONS

DESIGN	BY	G. Baker	CHECKED	J. Kuliki
DETAILS	BY	M. Gulyas	CHECKED	T. McMeans
QUANTITIES	BY	D. Turner	CHECKED	D. Harrison

PREPARED FOR THE STATE OF CALIFORNIA DEPARTMENT OF TRANSPORTATION

R. Manzanarez
PROJECT ENGINEER

BRIDGE NO. 34-0006L/R
KILOMETER POST 13.2/13.9

SAN FRANCISCO OAKLAND BAY BRIDGE
EAST SPAN SEISMIC SAFETY PROJECT
SELF-ANCHORED SUSPENSION BRIDGE
(SUPERSTRUCTURE & TOWER)

EAST SADDLE DETAILS NO. 5

Rev. Date: 5-18-98

ORIGINAL SCALE IN MILLIMETERS FOR REDUCED PLANS 0 10 20 30 40 50 60 70 80 90 100

CU 04
EA 0120F1

DISREGARD PRINTS BEARING EARLIER REVISION DATES

REVISION DATES (PRELIMINARY STAGE ONLY): 08/02/99 05/31/01 04/08/02 07/01/02 12/13/02 10/13/05

SHEET 371R1 OF

FILE => L:\BB\04-012001\SAS\Contract Plans and CCO\CCO\CCO#240\2-Revision 05-07-12\DGN\agsdd08a.dgn

USERNAME => orivera DATE PLOTTED => 07 MAY 2012 TIME PLOTTED => 11:04:17

100 % PS&E

DIST.	COUNTY	ROUTE	KILOMETER POST TOTAL PROJECT	SHEET NO.	TOTAL SHEETS
04	SF	80	13.2/13.9	788S1	1204

REGISTERED ENGINEER - CIVIL

05-09-12

PLANS APPROVAL DATE

The State of California or its officers or agents shall not be responsible for the accuracy or completeness of electronic copies of this plan sheet.

REGISTERED PROFESSIONAL ENGINEER Marwan N. Nader No. C 054426 Exp. 12/31/13 CIVIL STATE OF CALIFORNIA

T.Y. LIN / MOFFATT & NICHOL
825 BATTERY STREET
SAN FRANCISCO, CA 94111

Caltrans now has a web site! To get to the web site, go to: http://www.dot.ca.gov

Caltrans Metric

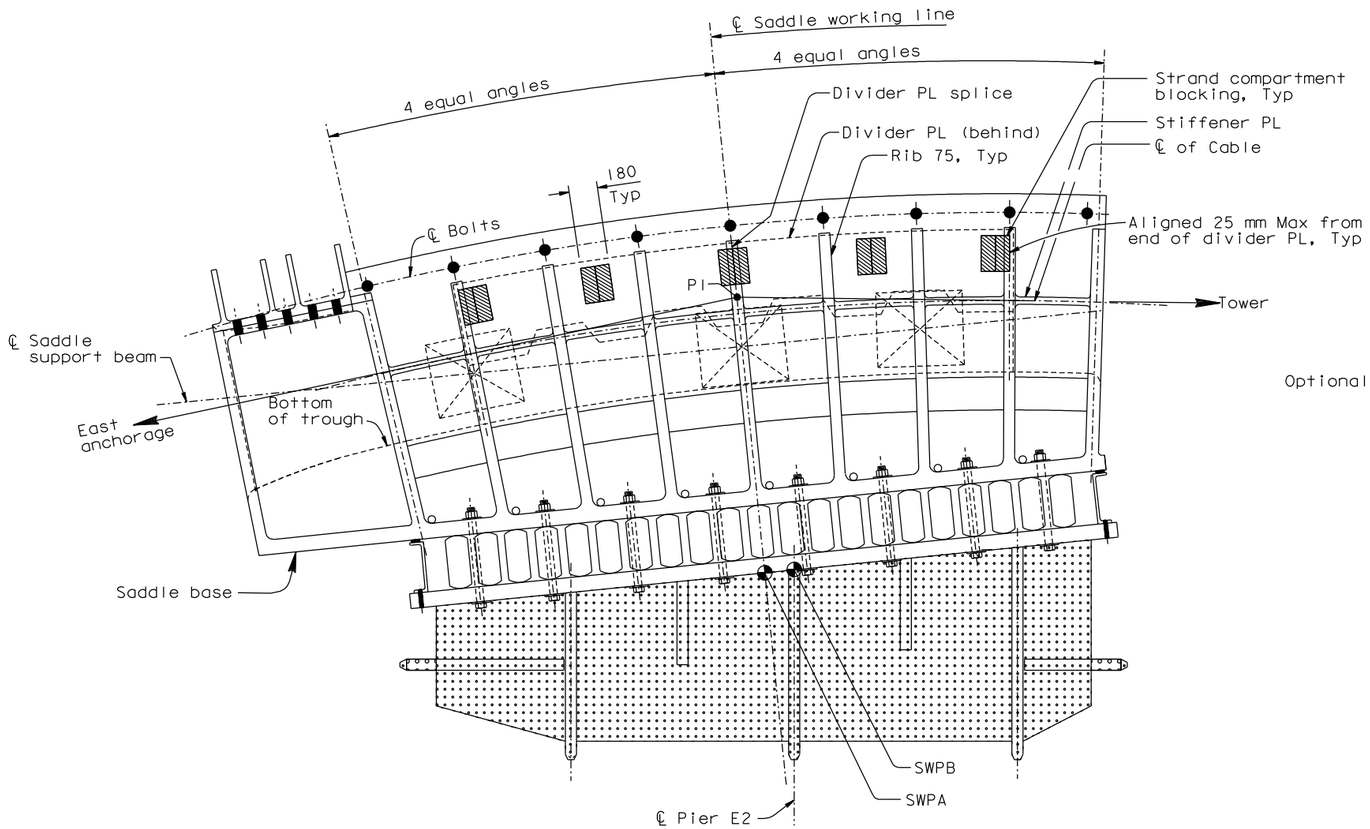

LAYOUT OF OPTIONAL HARDWOOD BLOCKING (See Note 7)

1:20

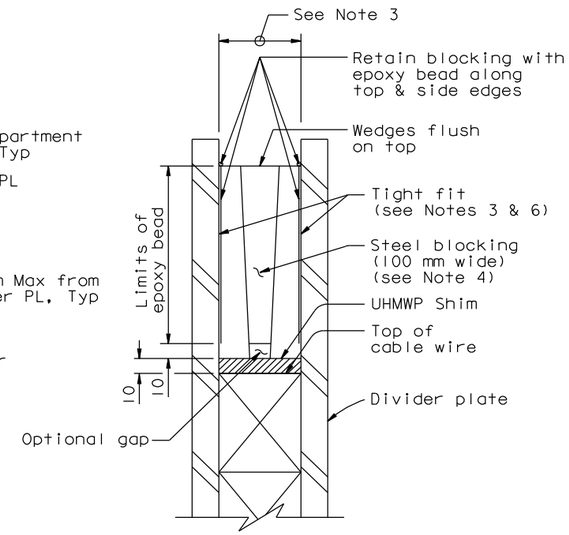

DETAIL D

1:2

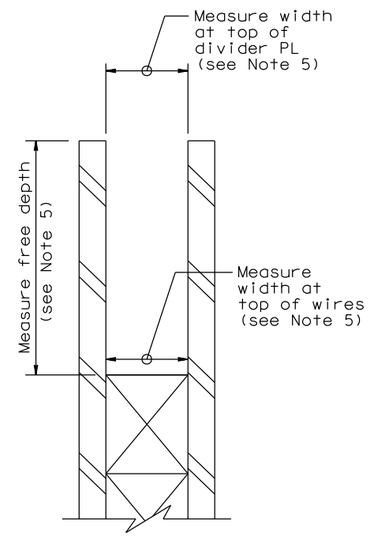

DETAIL D'

1:2

NOTES:

1. Wedged steel blocking layout is shown on "East Saddle Details No. 3" sheet.
2. Steel shall be ASTM A572. Surfaces of wedged steel plates against the divider plates shall have PTFE film (0.5 mm thick). All surfaces of steel shall be primed.
3. Prior to fabrication of new blocking, the Contractor shall measure as-built dimensions. The blocking shall be fabricated to fit tightly at the top and bottom within as-built compartment dimensions.
4. At the Contractor's option, the steel blocking may be fabricated in several pieces. The taper of any face shall not exceed 1:20. Provide adhesive between surfaces of blocking pieces.
5. East saddle survey (See Detail D')
   - Measure compartment width @ top and bottom
   - Measure compartment depth
   - Measure @ each blocking section
   - At each section measure all compartments
6. The completed blocking at each location is fabricated to fit tightly. Should tight fit not be achieved, the Contractor shall inform the Engineer for evaluation.
7. At the Contractor's option, hardwood blocking may be installed and left in place through load transfer. Hardwood blocking shall be installed in widths of 180 mm, and cut on site to fit tightly at each blocking location. After load transfer, hardwood blocking shall be left in place or replaced as directed by the Engineer.

CONTRACT CHANGE ORDER NO. _____
SHEET ____ OF ____

REQUESTS FOR INFORMATION NOT ADDRESSED IN THIS CCO REMAIN IN FORCE

ALL DIMENSIONS ARE IN MILLIMETERS UNLESS OTHERWISE SHOWN.

R. Valizadeh/V. Toan/Y.L./W.L./F.C.
DESIGN OVERSIGHT
Ryan Valizadeh / Vong Toan / Y. Liu
SIGN OFF DATE 05/09/12

MARK	DATE	DESCRIPTIONS	BY	CH'D	CCO#
0	05/09/12	SADDLE BLOCKING	GB	MN	240

REVISIONS

	BY		CHECKED	
DESIGN	BY	G. Baker	CHECKED	M. Nader
DETAILS	BY	G. Baker	CHECKED	M. Nader
QUANTITIES	BY	G. Baker	CHECKED	M. Nader

PREPARED FOR THE STATE OF CALIFORNIA DEPARTMENT OF TRANSPORTATION

R. Manzanarez
PROJECT ENGINEER

BRIDGE NO. 34-0006L/R
KILOMETER POST 13.2/13.9

SAN FRANCISCO OAKLAND BAY BRIDGE
EAST SPAN SEISMIC SAFETY PROJECT
SELF-ANCHORED SUSPENSION BRIDGE
(SUPERSTRUCTURE & TOWER)

EAST SADDLE DETAILS NO. 5A

Rev. Date: 5-18-98

ORIGINAL SCALE IN MILLIMETERS FOR REDUCED PLANS 0 10 20 30 40 50 60 70 80 90 100

CU 04
EA 0120F1

DISREGARD PRINTS BEARING EARLIER REVISION DATES 05/09/12

REVISION DATES (PRELIMINARY STAGE ONLY)

SHEET 371S1 OF

FILE => I:\bb\04-0120I\sas\contract plans and cco\cco\cco#240\3-update 05-09-12\dgn\agsdd08b.dgn

100 % PS&E

DATE PLOTTED => 09 MAY 2012 TIME PLOTTED => 11:59:13

USERNAME => DWinrow