Caltrans now has a web site! To get to the web site, go to: http://www.dot.ca.gov

DIST.	COUNTY	ROUTE	KILOMETER POST TOTAL PROJECT	SHEET NO.	TOTAL SHEETS
04	SF	80	13.2/13.9	788R1	1204

Caltrans Metric

REGISTERED ENGINEER - CIVIL

12-6-04
PLANS APPROVAL DATE

REGISTERED PROFESSIONAL ENGINEER Marwan N. Nader No. C 054426 Exp. 12/31/13 CIVIL STATE OF CALIFORNIA

The State of California or its officers or agents shall not be responsible for the accuracy or completeness of electronic copies of this plan sheet.

T.Y. LIN / MOFFATT & NICHOL
825 BATTERY STREET
SAN FRANCISCO, CA 94111

LEGEND:

Indicates zone with Level I testing requirements (30 mm from final interior and exterior surface of trough for entire length of saddle)

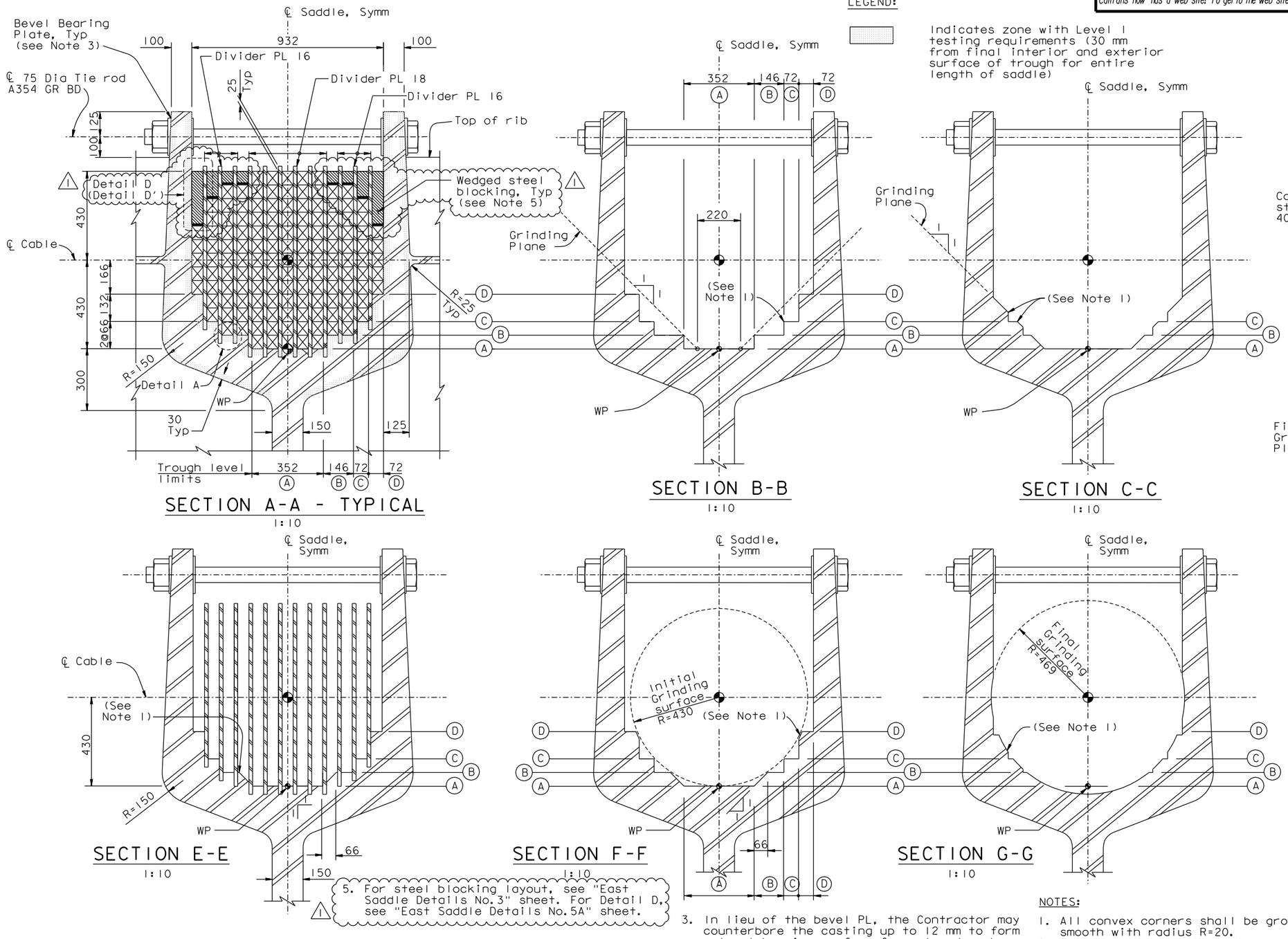

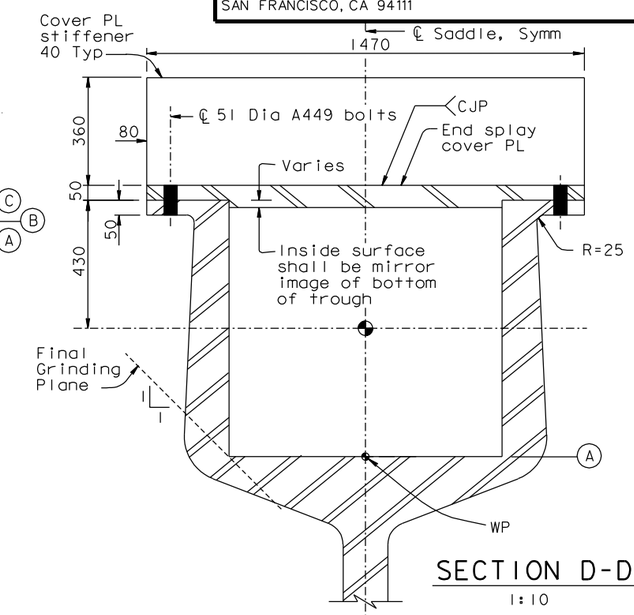

SECTION D-D
1:10

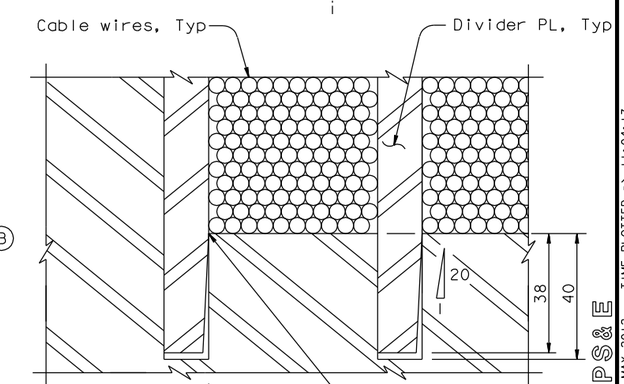

DETAIL A
1:1

5. For steel blocking layout, see "East Saddle Details No.3" sheet. For Detail D, see "East Saddle Details No.5A" sheet.

3. In lieu of the bevel PL, the Contractor may counterbore the casting up to 12 mm to form a level bearing surface for nut and washer.

4. The tapered faces of the divider plates shall be placed facing downwards.

NOTES:

1. All convex corners shall be ground smooth with radius R=20.
2. The trough width, including all dividers and compartments, shall be 932 (tolerance +3,-3).

ALL DIMENSIONS ARE IN MILLIMETERS UNLESS OTHERWISE SHOWN.

CONTRACT CHANGE ORDER NO. _____
SHEET ____ OF ____

REQUESTS FOR INFORMATION NOT ADDRESSED IN THIS CCO REMAIN IN FORCE

R. Valizadeh/V. Toan/Y.L./W.L./F.C.
DESIGN OVERSIGHT
SIGN OFF DATE 05/07/12

MARK	DATE	DESCRIPTIONS	BY	CH'D	CCO#
1	05/07/12	SADDLE BLOCKING	GB	MN	240

REVISIONS

DESIGN	BY	G. Baker	CHECKED	J. Kuliki
DETAILS	BY	M. Gulyas	CHECKED	T. McMeans
QUANTITIES	BY	D. Turner	CHECKED	D. Harrison

PREPARED FOR THE STATE OF CALIFORNIA DEPARTMENT OF TRANSPORTATION

R. Manzanarez
PROJECT ENGINEER

BRIDGE NO. 34-0006L/R
KILOMETER POST 13.2/13.9

SAN FRANCISCO OAKLAND BAY BRIDGE
EAST SPAN SEISMIC SAFETY PROJECT
SELF-ANCHORED SUSPENSION BRIDGE
(SUPERSTRUCTURE & TOWER)

EAST SADDLE DETAILS NO. 5

Rev. Date: 5-18-98

ORIGINAL SCALE IN MILLIMETERS FOR REDUCED PLANS 0 10 20 30 40 50 60 70 80 90 100

CU 04
EA 0120F1

DISREGARD PRINTS BEARING EARLIER REVISION DATES

REVISION DATES (PRELIMINARY STAGE ONLY): 08/02/99 05/31/01 04/08/02 07/01/02 12/13/02 10/13/05

SHEET 371R1 OF

FILE => L:\BB\04-012001\SAS\Contract Plans and CCO\CCO\CCO#240\2-Revision 05-07-12\DGN\agsdd08a.dgn

USERNAME => orivera DATE PLOTTED => 07 MAY 2012 TIME PLOTTED => 11:04:17

100 % PS&E