DIST.	COUNTY	ROUTE	KILOMETER POST TOTAL PROJECT	SHEET NO.	TOTAL SHEETS
04	SF	80	13.2/13.9	778S2R1	1204

REGISTERED ENGINEER - CIVIL

10-31-08
PLANS APPROVAL DATE

REGISTERED PROFESSIONAL ENGINEER Marwan N. Nader No. C 054426 Exp. 12/31/13 CIVIL STATE OF CALIFORNIA

The State of California or its officers or agents shall not be responsible for the accuracy or completeness of electronic copies of this plan sheet.

T.Y. LIN / MOFFATT & NICHOL
825 BATTERY STREET
SAN FRANCISCO, CA 94111

Caltrans now has a web site! To get to the web site, go to: http://www.dot.ca.gov

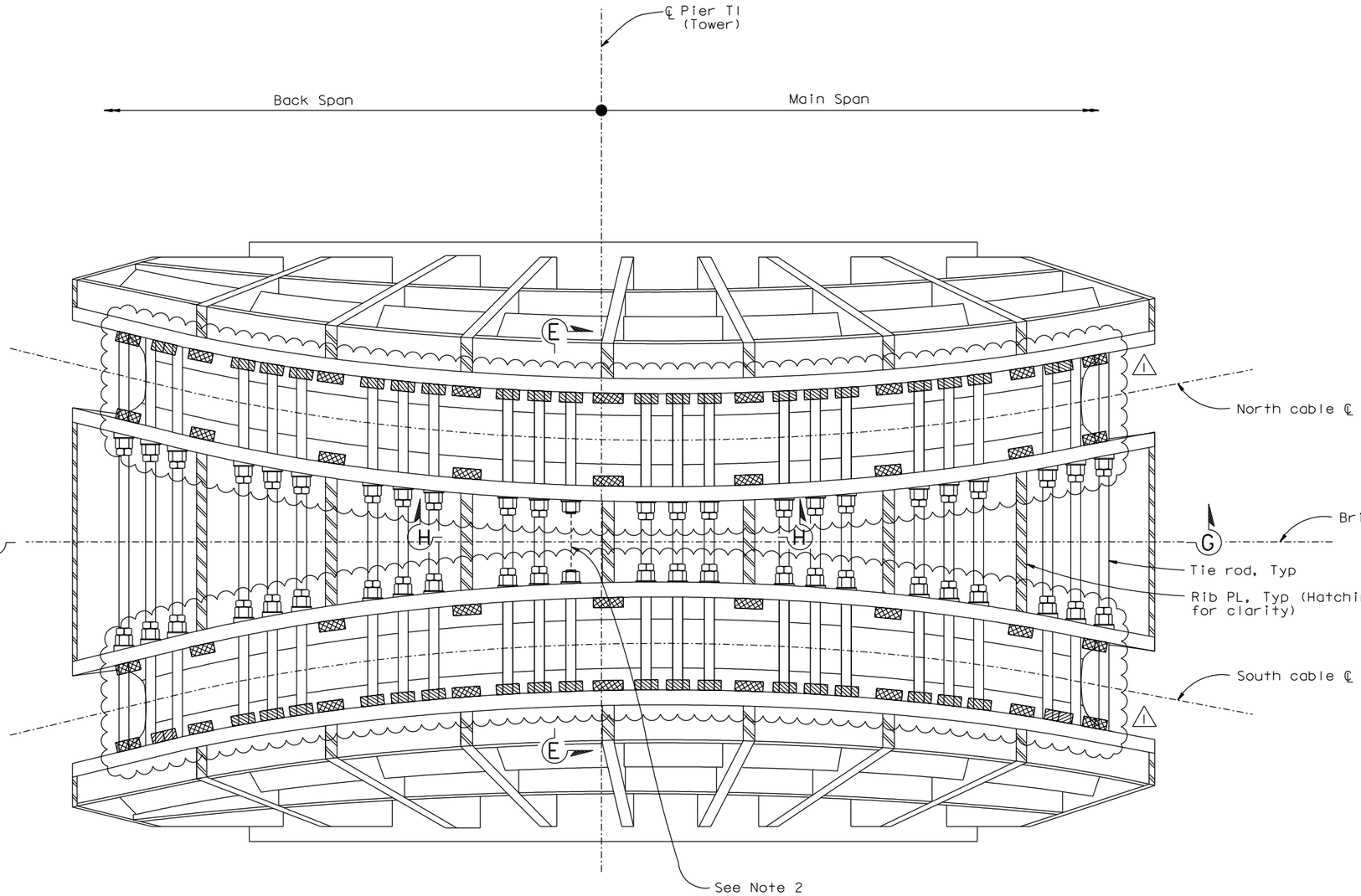

VIEW D-D
1:25

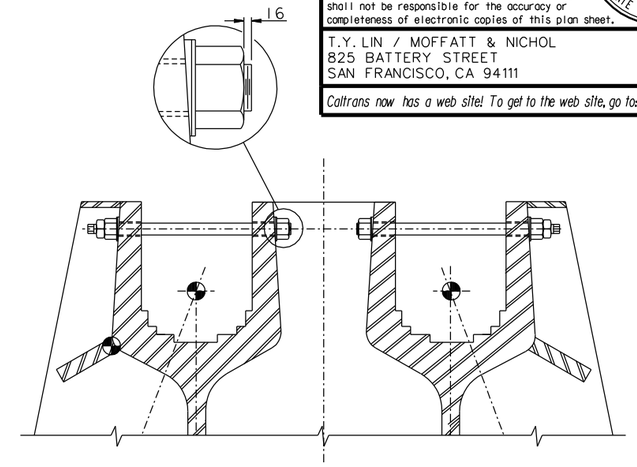

SECTION E-E (for details not shown, see Section A-A)
1:25

LEGEND:

- Type F Blocking
- Type G Blocking

NOTES:

1. For Section G-G, see "Tower Access Details No.23" sheet. For Section H-H, see "Tower Saddle Details No.5A" sheet.
2. Tie rod is discontinuous between saddle troughs at this location only.
3. For blocking, see "Tower Saddle Details No.6" sheet.

CONTRACT CHANGE ORDER NO. _____
SHEET ____ OF ____

REQUESTS FOR INFORMATION NOT ADDRESSED IN THIS CCO REMAIN IN FORCE

ALL DIMENSIONS ARE IN MILLIMETERS UNLESS OTHERWISE SHOWN

R. Valizadeh/V. Toan/Y.L./W.L./F.C.
DESIGN OVERSIGHT
Raya Valizadeh / Vong Toan / Y. Liu
SIGN OFF DATE 05/07/12

MARK	DATE	DESCRIPTIONS	BY	CH'D	CCO#
1	05/07/12	SADDLE BLOCKING	GB	MN	240
0	10/31/08	TOWER HEAD DETAILS	NV	MN	93

REVISIONS

	BY	CHECKED
DESIGN	N. Vo	M. Nader
DETAILS	N. Vo	M. Nader
QUANTITIES	N. Vo	M. Nader

PREPARED FOR THE STATE OF CALIFORNIA DEPARTMENT OF TRANSPORTATION

R. Manzanarez
PROJECT ENGINEER

BRIDGE NO. 34-0006L/R
KILOMETER POST 13.2/13.9

SAN FRANCISCO OAKLAND BAY BRIDGE
EAST SPAN SEISMIC SAFETY PROJECT
SELF-ANCHORED SUSPENSION BRIDGE
(SUPERSTRUCTURE & TOWER)

TOWER SADDLE DETAILS NO. 5B

Rev. Date: 5-18-98

ORIGINAL SCALE IN MILLIMETERS FOR REDUCED PLANS 0 10 20 30 40 50 60 70 80 90 100

CU 04
EA 0120F1

DISREGARD PRINTS BEARING EARLIER REVISION DATES 10/31/08

REVISION DATES (PRELIMINARY STAGE ONLY)

SHEET 361S2R1 OF

FILE => I:\bb\04-012001\sas\contract plans and cco\cco\cco#240\2-revision 05-07-12\dgn\agtsd05b.dgn

USERNAME => arivera DATE PLOTTED => 07 MAY 2012 TIME PLOTTED => 15:42:03

100% PS&E