DIST.	COUNTY	ROUTE	KILOMETER POST TOTAL PROJECT	SHEET NO.	TOTAL SHEETS
04	SF	80	13.2/13.9	753SIR3	1204

Caltrans Metric

REGISTERED ENGINEER - CIVIL

02-20-09
PLANS APPROVAL DATE

REGISTERED PROFESSIONAL ENGINEER Marwan N. Nader No. C 054426 Exp. 12/31/13 CIVIL STATE OF CALIFORNIA

The State of California or its officers or agents shall not be responsible for the accuracy or completeness of electronic copies of this plan sheet.

T.Y. LIN / MOFFATT & NICHOL
825 BATTERY STREET
SAN FRANCISCO, CA 94111

Caltrans now has a web site! To get to the web site, go to: http://www.dot.ca.gov

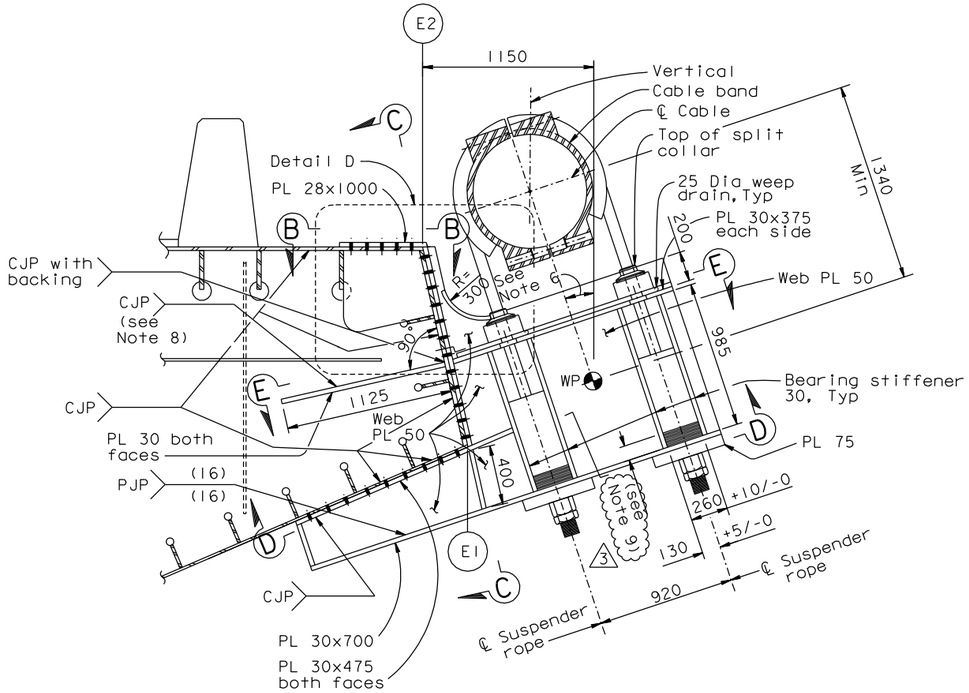

ELEVATION

SUSPENDER BRACKET AT PP 108, 110 (See Note 3)

1:20

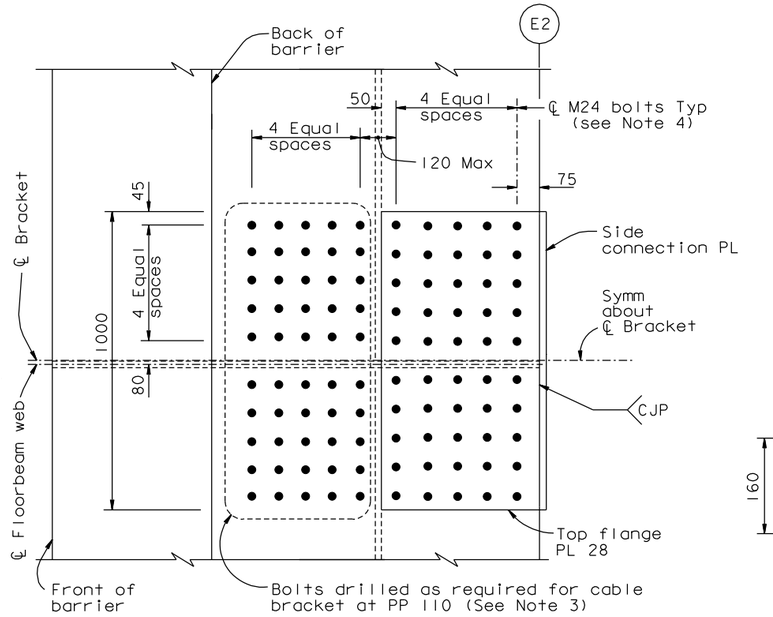

VIEW B-B (Top flange connection)

1:10

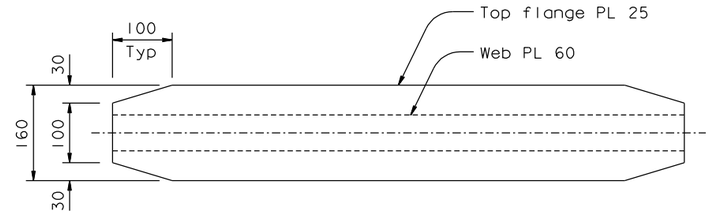

VIEW G-G

1:5

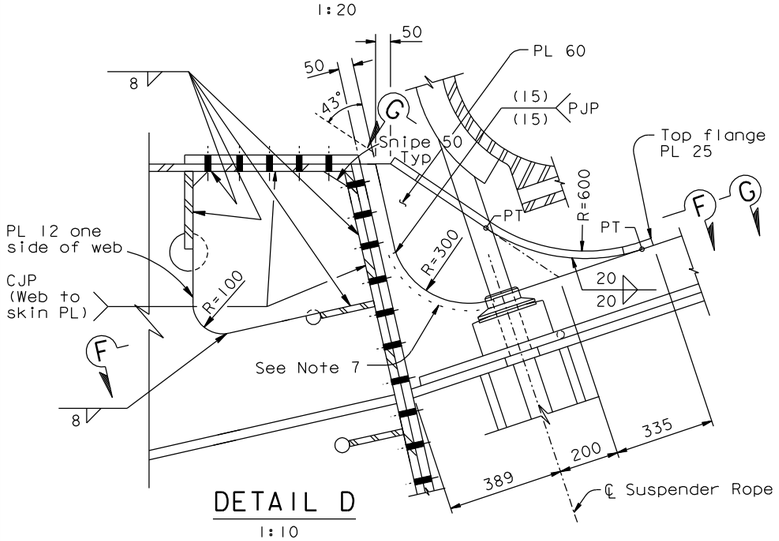

DETAIL D

1:10

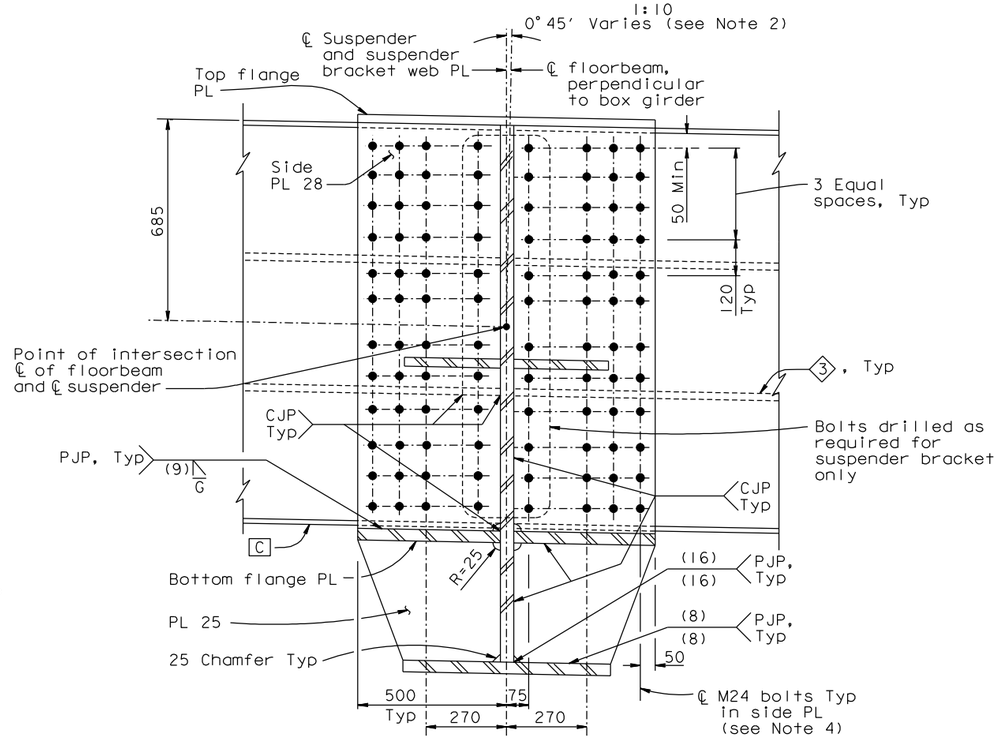

SECTION C-C

1:10

LEGEND:

3 Girder stiffener Type 3

C Girder face C

NOTES:

1. For details not shown, see "Suspender Bracket Details No.1" through "Suspender Bracket Details No.3" sheets.
2. The Contractor shall consider variation in roadway grade in his details.
3. The Contractor shall provide shop drawings for two suspender brackets at PP 110 ("E" line and "W" line). The Contractor shall fabricate and install a suspender bracket at PP 110 ("E" line and "W" line).
4. Bolt spacings shall match cable bracket details, see "Cable Bracket Details" sheets.
5. For View D-D, Section E-E and F-F, see "Suspender Bracket Details No. 9" sheet.
6. All suspender bracket components shall be fabricated to fit the computed cable profile.
7. Remove curve PL 20x50 from both sides and grind flush.
8. At the Contractor's option, CJP with backing may be used, subject to review and approval of the engineer.
9. For shim stack heights, see "Suspender Bracket Details No.10" sheet.

CONTRACT CHANGE ORDER NO. ____
SHEET ___ OF ___

REQUESTS FOR INFORMATION NOT ADDRESSED IN THIS CCO REMAIN IN FORCE

MARK	DATE	DESCRIPTIONS	BY	CH'D	CCO#
3	04/05/12	SUSPENSION SYSTEM SHIMS	GB	MN	240
2	01/05/12	FIELD MODIFICATION OF SUSPENDER BRACKETS	GB	MN	230
1	12/31/09	SUSPENDER BRACKETS	GB	MN	104
0	02/20/09	SUSPENDER BRACKETS	GB	MN	104

REVISIONS

R. Valizadeh/V.Toan/Y.L./W.L./F.C.
DESIGN OVERSIGHT
SIGN OFF DATE 04/09/12

	BY	CHECKED
DESIGN	G. Baker	M. Nader
DETAILS	G. Baker	M. Nader
QUANTITIES	G. Baker	M. Nader

PREPARED FOR THE STATE OF CALIFORNIA DEPARTMENT OF TRANSPORTATION

R. Manzanarez
PROJECT ENGINEER

BRIDGE NO. 34-0006L/R
KILOMETER POST 13.2/13.9

ALL DIMENSIONS ARE IN MILLIMETERS UNLESS OTHERWISE SHOWN

SAN FRANCISCO OAKLAND BAY BRIDGE
EAST SPAN SEISMIC SAFETY PROJECT
SELF-ANCHORED SUSPENSION BRIDGE
(SUPERSTRUCTURE & TOWER)

SUSPENDER BRACKET DETAILS NO. 8

Rev. Date: 5-18-98

ORIGINAL SCALE IN MILLIMETERS FOR REDUCED PLANS 0 10 20 30 40 50 60 70 80 90 100

CU 04
EA 0120F1

DISREGARD PRINTS BEARING EARLIER REVISION DATES 01/30/09

REVISION DATES (PRELIMINARY STAGE ONLY)

SHEET 336SIR3 OF

FILE => I:\bb\04-01200I\sas\contract plans and cco\cco\cco#240\I-original 04-05-12\dgn\agsadI3c.dgn

100 % PS&E

USERNAME => grivera DATE PLOTTED => 05 APR 2012 TIME PLOTTED => 08:54:05