DIST.	COUNTY	ROUTE	KILOMETER POST TOTAL PROJECT	SHEET NO.	TOTAL SHEETS
04	SF	80	13.2/13.9	752R4	1204

George Baker
REGISTERED ENGINEER - CIVIL
12-6-04
PLANS APPROVAL DATE

REGISTERED PROFESSIONAL ENGINEER George S. Baker No. C 57112 Exp. 12/31/05 CIVIL STATE OF CALIFORNIA

The State of California or its officers or agents shall not be responsible for the accuracy or completeness of electronic copies of this plan sheet.

Caltrans Metric

T.Y. LIN / MOFFATT & NICHOL
825 BATTERY STREET
SAN FRANCISCO, CA 94111

Caltrans now has a web site! To get to the web site, go to: http://www.dot.ca.gov

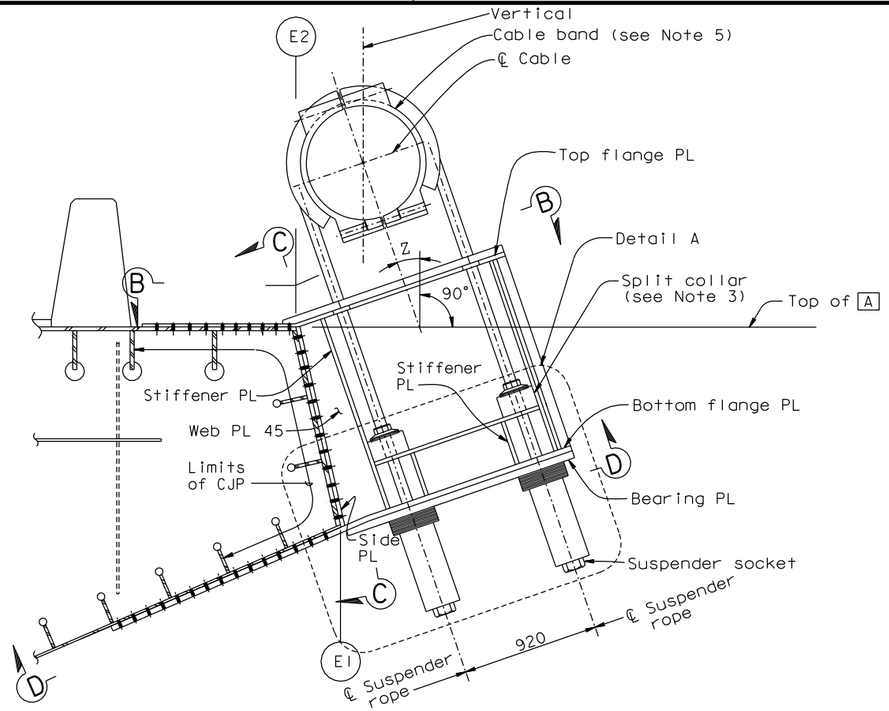

ELEVATION
SUSPENDER BRACKET AT PP 104, 106 (See Note 6)
1:20

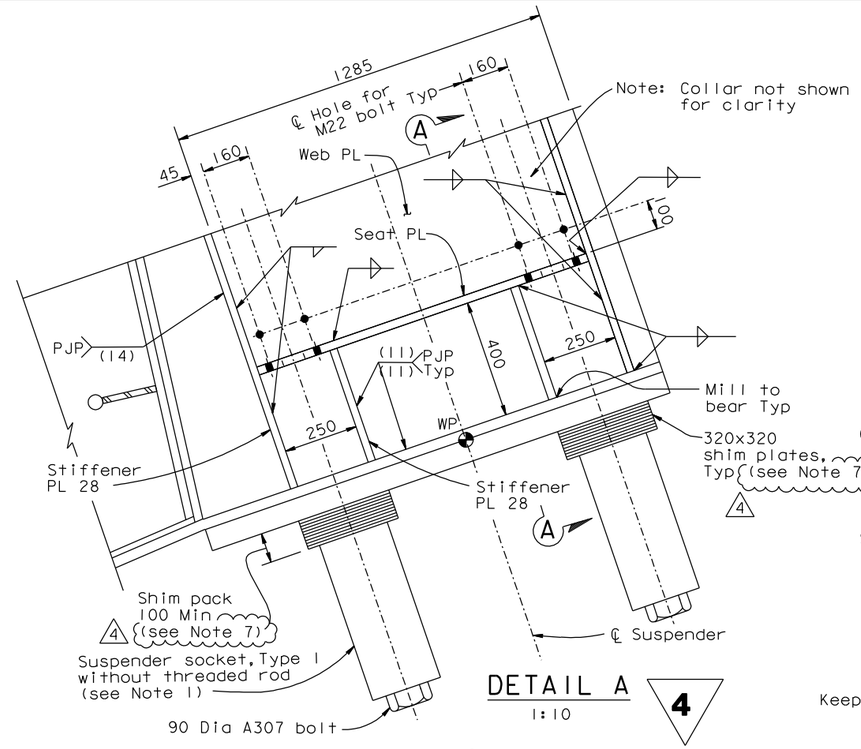

DETAIL A
1:10
4

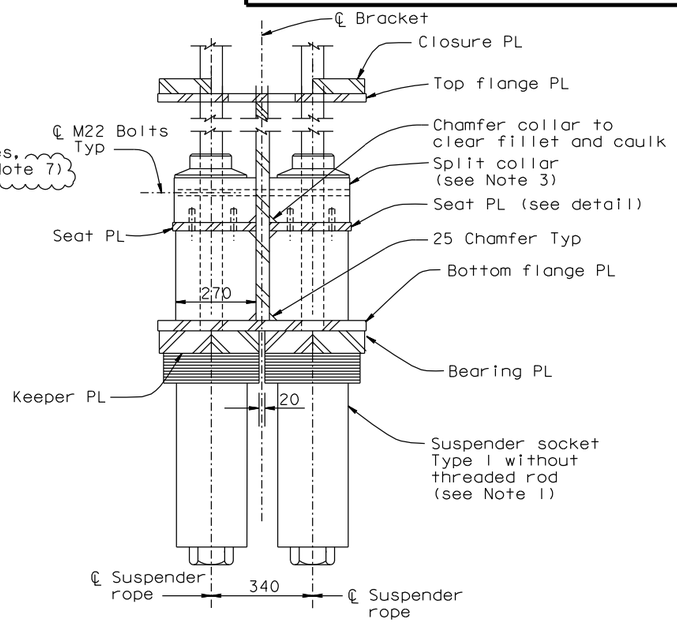

SECTION A-A
1:10

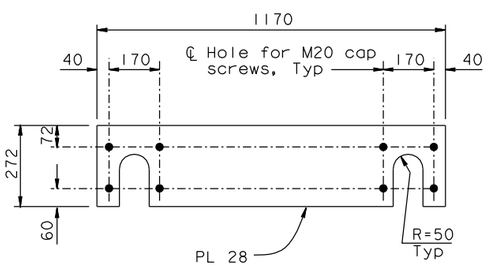

SEAT PLATE DETAIL
1:10

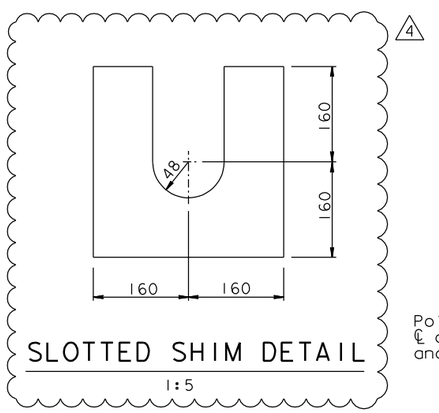

SLOTTED SHIM DETAIL
1:5

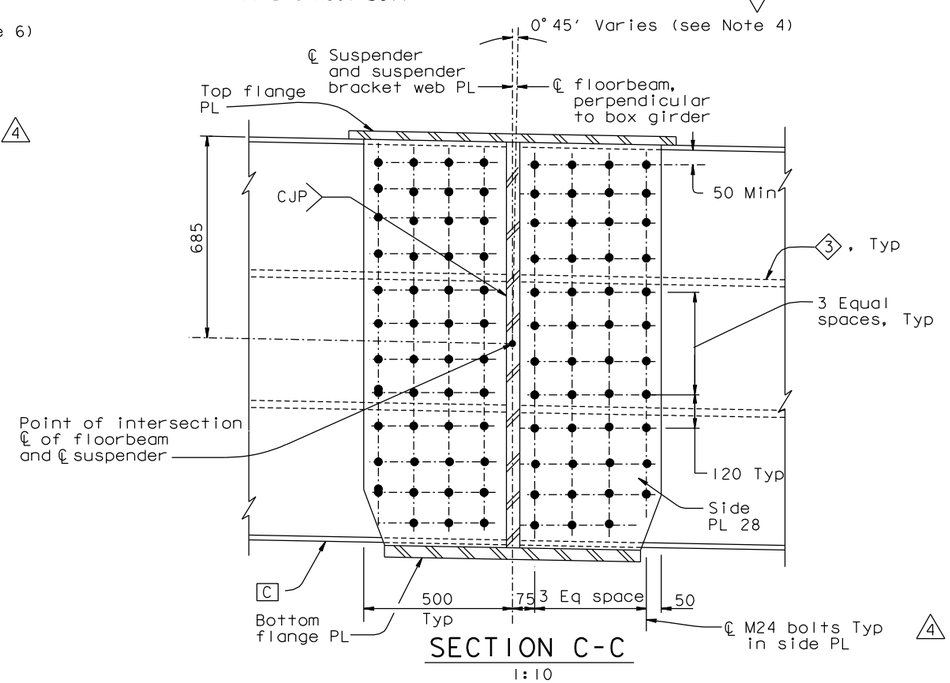

SECTION C-C
1:10

LEGEND:

3 Girder stiffener Type 3

C Girder face C

NOTES:

1. Threaded rod may be used for erection. After installation of suspender socket, ends shall be sealed with 90 Dia A307 bolts.
2. For details not shown, see "Suspender Bracket Details No.1" through "Suspender Bracket Details No.3" sheets.
3. For split collar details, see "Suspender Bracket Details No.5" sheet.
4. The Contractor shall consider variation in roadway grade in his details.
5. For cable band details, see "Cable Band Details" and "Cable Handrope Details" sheets.
6. For suspender brackets at PP 108 and PP 110, see "Suspender Bracket Details No.8" and "Suspender Bracket Details No.9" sheets.
7. For shim stack heights, see "Suspender Bracket Details No.10" sheet. 4

ALL DIMENSIONS ARE IN MILLIMETERS UNLESS OTHERWISE SHOWN

REGISTERED PROFESSIONAL ENGINEER Marwan N. Nader No. C 054426 Exp. 12/31/13 CIVIL STATE OF CALIFORNIA

FOR REVISIONS ONLY

CONTRACT CHANGE ORDER NO. ____
SHEET ____ OF ____

REQUESTS FOR INFORMATION NOT ADDRESSED IN THIS CCO REMAIN IN FORCE

MARK	DATE	DESCRIPTIONS	BY	CH'D	CCO#
4	04/05/12	SUSPENSION SYSTEM SHIMS	GB	MN	240
3	02/20/09	SUSPENDER BRACKETS	GB	DT	104
2	08/15/08	CABLE ELECTRICAL	GB	DT	72
1	04/16/07	CABLE SYSTEM	GB	DT	37

REVISIONS

R. Valizadeh/V. Toan/Y.L./W.L./F.C.
DESIGN OVERSIGHT
SIGN OFF DATE 04/05/12

	BY	CHECKED
DESIGN	G. Baker	T. McMeans
DETAILS	S. Camo	P. Ritchie
QUANTITIES	C. Mauch	C. Mibelli

PREPARED FOR THE STATE OF CALIFORNIA DEPARTMENT OF TRANSPORTATION

R. Manzanarez
PROJECT ENGINEER

BRIDGE NO. 34-0006L/R
KILOMETER POST 13.2/13.9

SAN FRANCISCO OAKLAND BAY BRIDGE
EAST SPAN SEISMIC SAFETY PROJECT
SELF-ANCHORED SUSPENSION BRIDGE
(SUPERSTRUCTURE & TOWER)

SUSPENDER BRACKET DETAILS NO. 6

Rev. Date: 5-18-98

ORIGINAL SCALE IN MILLIMETERS FOR REDUCED PLANS 0 10 20 30 40 50 60 70 80 90 100

CU 04
EA 0120F1

DISREGARD PRINTS BEARING EARLIER REVISION DATES

REVISION DATES (PRELIMINARY STAGE ONLY) 01/15/99 05/15/99 05/31/01 04/08/02 01/07/02 12/19/02 11/13/05

SHEET 335R4 OF

FILE => I:\bb\04-012001\sas\contract plans and cco\cco\cco#240\1-original 04-05-12\dgn\agsad13.dgn

USERNAME => arivera DATE PLOTTED => 05 APR 2012 TIME PLOTTED => 08:53:25

100% PS&E