DIST.	COUNTY	ROUTE	KILOMETER POST TOTAL PROJECT	SHEET NO.	TOTAL SHEETS
04	SF	80	13.2/13.9	749R2	1204

Caltrans Metric

George Baker
REGISTERED ENGINEER - CIVIL
12-6-04
PLANS APPROVAL DATE

REGISTERED PROFESSIONAL ENGINEER George S. Baker No. C 57112 Exp. 12/31/05 CIVIL STATE OF CALIFORNIA

The State of California or its officers or agents shall not be responsible for the accuracy or completeness of electronic copies of this plan sheet.

T.Y. LIN / MOFFATT & NICHOL
825 BATTERY STREET
SAN FRANCISCO, CA 94111

Caltrans now has a web site! To get to the web site, go to: http://www.dot.ca.gov

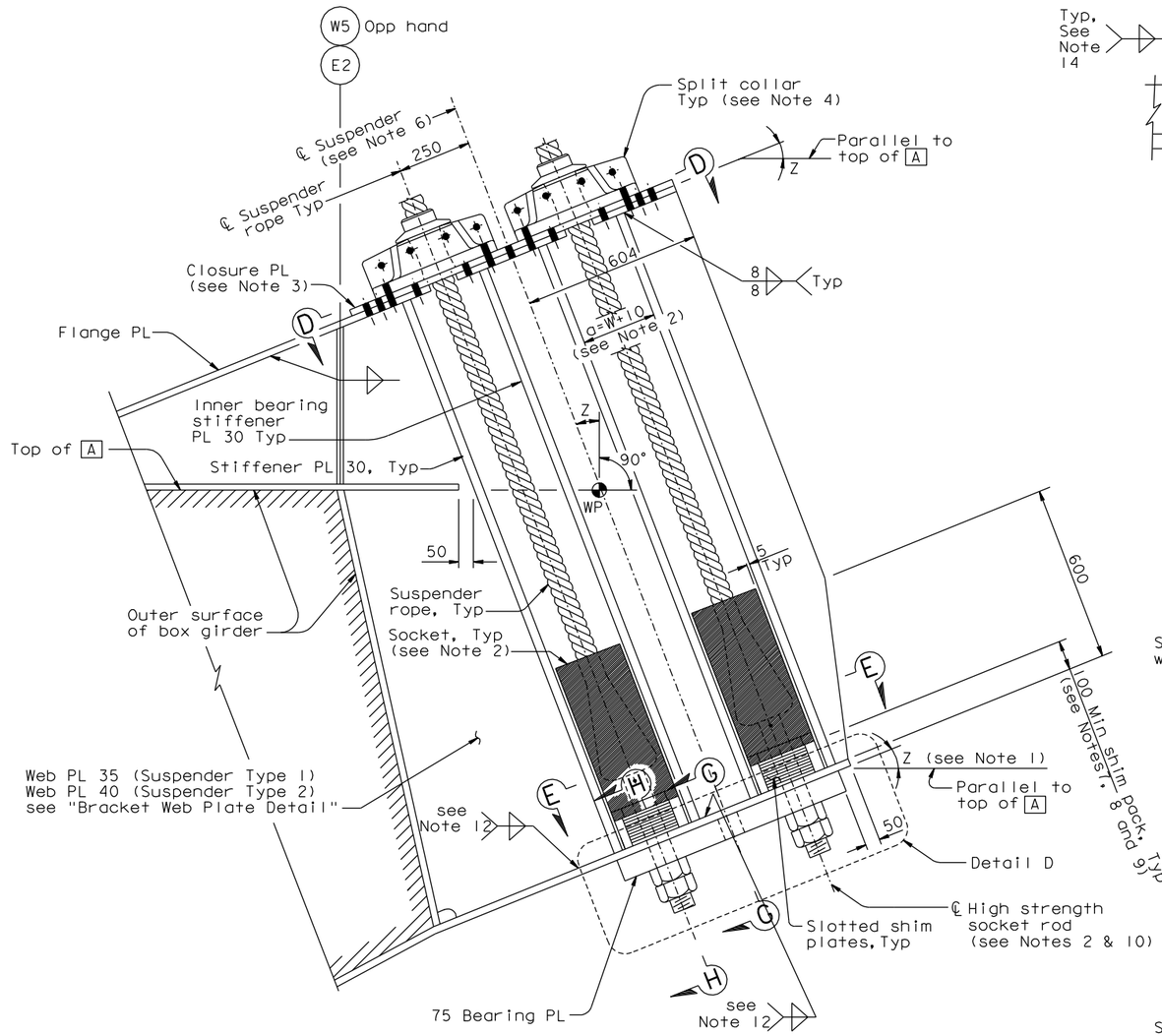

SUSPENDER ANCHORAGE

DETAIL C

1:10

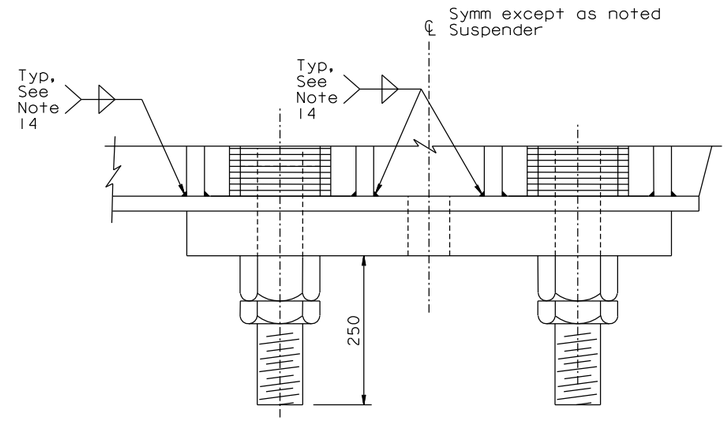

DETAIL D

1:5

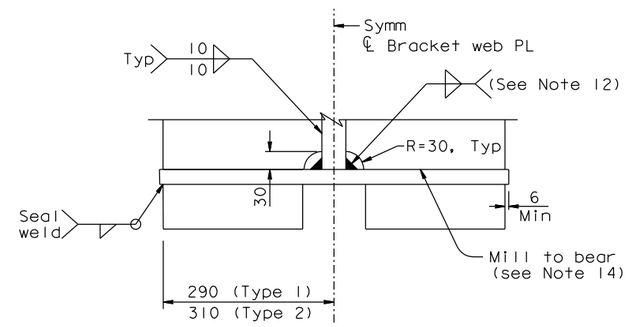

SECTION G-G

1:5

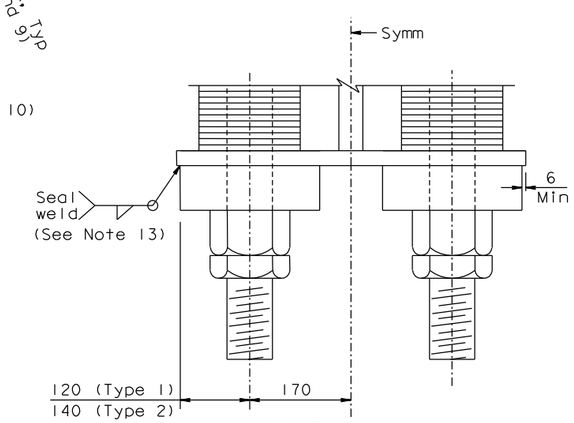

SECTION H-H

1:5

LEGEND:

W	Width of Suspender Socket Base
Y	Total thickness of shim plates and anchor plate
▨	Suspender Socket (see Note 2)
WP	Working Point (see Note 5)
A	Girder Face A

NOTES:

1. For Z and location of suspender Types 1 and 2, see "Suspender Layout" sheets. Angles Z are measured with respect to the top of A.
2. For suspender socket details, see "Suspender Socket Details" sheet.
3. For closure plate details, see "Suspender Bracket Details No. 4" sheet.
4. For split collar details, see "Suspender Bracket Details No. 5" sheet.
5. For Working Point details, see "Suspender Layout No. 1" sheet.
6. Suspender ℄ varies with bracket location. Cutouts and bolts in flange PL shall be placed with respect to suspender ℄.
7. The Contractor shall provide the specified shim pack thickness for erection adjustment as directed by the Engineer, and to provide future tension adjustment for a LRT. The Contractor may add additional shims as part of his fabrication methods, subject to approval by the Engineer.
8. NOTE DELETED. △2
9. For shim stack heights, see "Suspender Bracket Details No. 10" sheet.
10. The diameter of holes in bearing plate for socket rods shall be 4 mm greater than the rod diameter.
11. Socket rods shall be prestressed to 0.5 Fy.
12. Fillet weld size shall be 10 mm for Type 1 suspender brackets and shall be 15 mm for Type 2 suspender brackets.
13. The Contractor may increase the size of the fillet weld as part of his means and methods, subject to review and approval of the Engineer.
14. At the Contractor's option, a CJP weld may be used.

REGISTERED PROFESSIONAL ENGINEER Marwan N. Nader No. C 054426 Exp. 12/31/13 CIVIL STATE OF CALIFORNIA

FOR REVISIONS ONLY

CONTRACT CHANGE ORDER NO. _____
SHEET ____ OF ____

REQUESTS FOR INFORMATION NOT ADDRESSED IN THIS CCO REMAIN IN FORCE

ALL DIMENSIONS ARE IN MILLIMETERS UNLESS OTHERWISE SHOWN

MARK	DATE	DESCRIPTIONS	BY	CH'D	CCO#
2	04/05/12	SUSPENSION SYSTEM SHIMS	GB	MN	240
1	04/16/07	CABLE SYSTEM	GB	DT	37

REVISIONS

R. Valizadeh/V. Toan/Y.L./W.L./F.C.
DESIGN OVERSIGHT
Roya Valizadeh / Vong Toan / Y. Liu
SIGN OFF DATE 04/05/12

DESIGN	BY G. Baker	CHECKED T. McMeans	
DETAILS	BY S. Camo	CHECKED P. Ritchie	
QUANTITIES	BY C. Mauch	CHECKED C. Mibelli	

PREPARED FOR THE STATE OF CALIFORNIA DEPARTMENT OF TRANSPORTATION

R. Manzanarez
PROJECT ENGINEER

BRIDGE NO. 34-0006L/R
KILOMETER POST 13.2/13.9

SAN FRANCISCO OAKLAND BAY BRIDGE
EAST SPAN SEISMIC SAFETY PROJECT
SELF-ANCHORED SUSPENSION BRIDGE
(SUPERSTRUCTURE & TOWER)

SUSPENDER BRACKET DETAILS NO. 3

Rev. Date: 5-18-98

ORIGINAL SCALE IN MILLIMETERS FOR REDUCED PLANS 0 10 20 30 40 50 60 70 80 90 100

CU 04
EA 0120F1

DISREGARD PRINTS BEARING EARLIER REVISION DATES → 05/15/99 08/02/99 05/31/01 04/08/02 01/07/02 12/19/02 11/13/05

SHEET 332R2 OF

FILE => I:\bb\04-012001\sas\contract plans and cco\cco\cco#240\1-original 04-05-12\dgn\agsad12.dgn

USERNAME => arivera DATE PLOTTED => 05 APR 2012 TIME PLOTTED => 08:52:50

100% PS&E