DEPARTMENT OF TRANSPORTATION
325 Burma Road
Oakland, CA 94607
Phone: (510) 622-4200
FAX: (510) 622-4266

Flex your power!
Be energy efficient!

July 3, 2012

04-0120S4
04-SF-80-12.7/13.2
YBITS

State Letter No. 692

Mr. Greg Allen
MCM Construction, Inc.
450 Burma Road
Oakland, CA 94607

Subject: MCM-SUB-0283 - HS Bar - Hinge KE Closure - Shop Drawings

Dear Mr. Allen:

Submittal MCM-SUB-0283-00, dated July 2, 2012 regarding Hinge KE Closure Rebar Shop Drawings has been reviewed and is approved.

Your attention is directed to your responsibilities pursuant to Section 5-1.02 and 7-1.09, of the Standard Specifications as well as the Construction Safety Orders.

If you have any questions, please contact Mehran Ardakanian at (415) 720-4005.

Sincerely,

Mehran Ardakanian, P.E.
Senior Structures Representative
For
William Howe, P.E.
Senior Resident Engineer

File 5.20, 58.0283
cc: W.Casey, W.Howe, M.Ardakanian

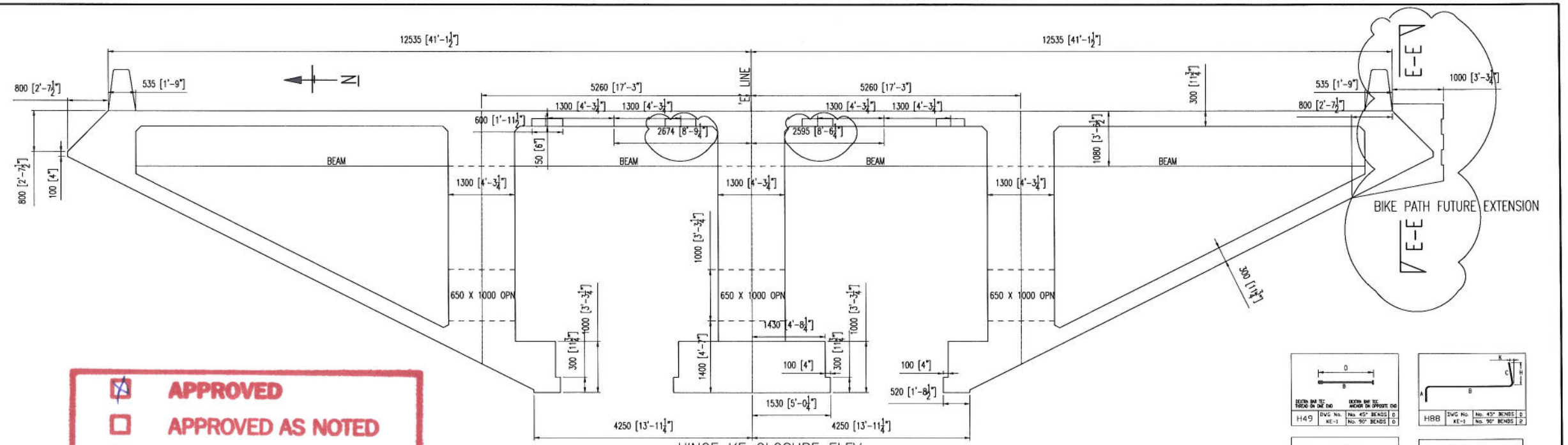

HINGE KE CLOSURE ELEV

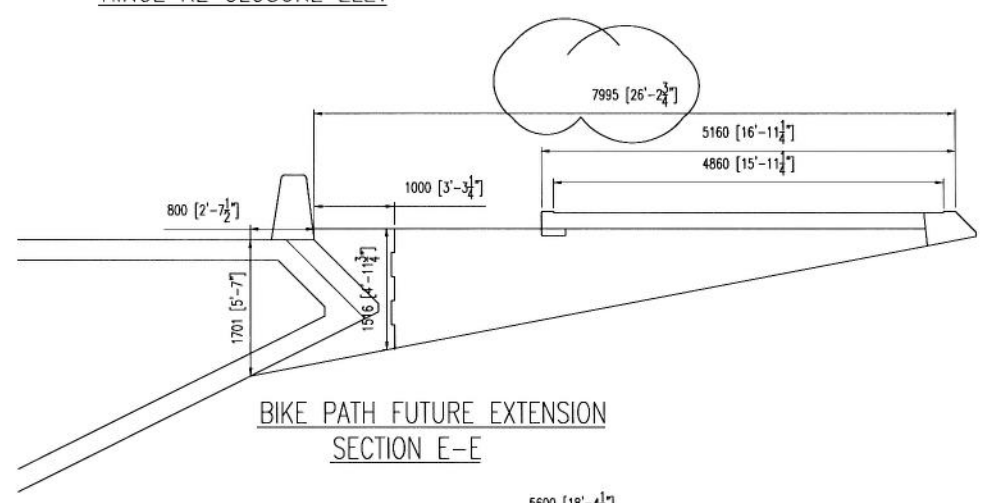

BIKE PATH FUTURE EXTENSION
SECTION E-E

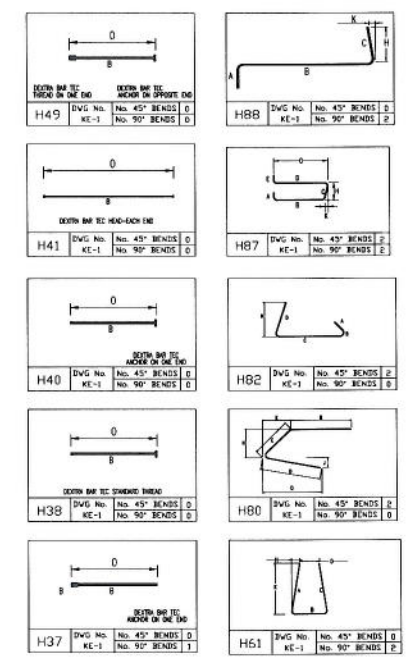

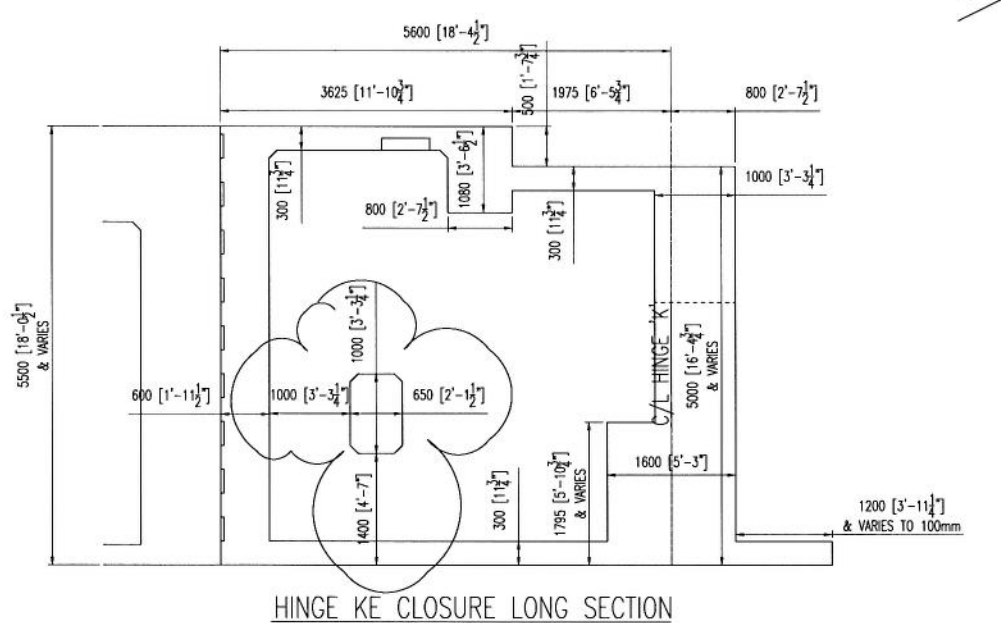

HINGE KE CLOSURE LONG SECTION
(OUTSIDE RIDGE LINES)

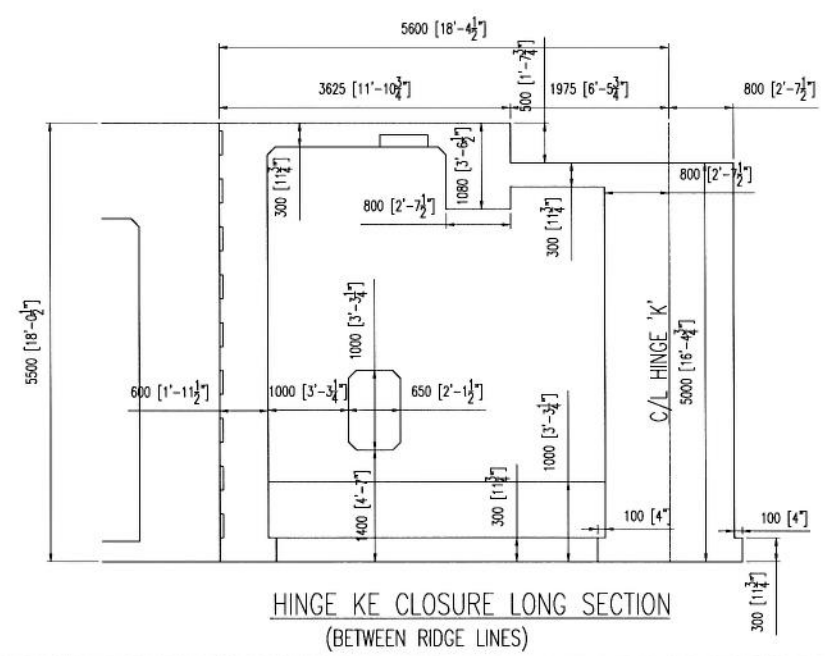

HINGE KE CLOSURE LONG SECTION
(BETWEEN RIDGE LINES)

APPROVED
APPROVED AS NOTED
NOT APPROVED

Pursuant to Section 5-1.02
of the Standard Specifications
State of California
DEPARTMENT OF TRANSPORTATION
Division of Structures
Office of Structure Construction

Signed _____
Structure Representative

Date 7/3/2012

No.	Description	Date	By
	FOR PLACING	XX/XX/2012	RJC
	REVI PER REVIEW	06/28/2012	RJC
	FOR REVIEW	06/08/2012	RJC

Revisions and Issue Record

The full intent and purpose of this drawing is the placing of reinforcing steel bars ONLY. It is NOT to be used as a means of communication between the Architect, Engineer, Contractor or any other Sub-trades.

THIS DRAWING IS NOT TO BE SCALED.

Harris Salinas Rebar INC.
355 SOUTH VASCO ROAD, LIVERMORE, CALIFORNIA 94550
TEL. (925) 373-0733 FAX. (925) 373-0136

Project: YBI TRANSITION STRUCTURES
EASTBOUND BRIDGE

Drawing: HINGE KE CLOSURE
ELEVATION/PLAN

Contractor: AM.BRIDGE/FLUOR-JV

Customer: CAL TRANS

Refer to Run No: KE-SB

Date	Drawn	Chkd.	Contract No.	Dwg. No.
05/31/2012	RJC		13114174	KE-1

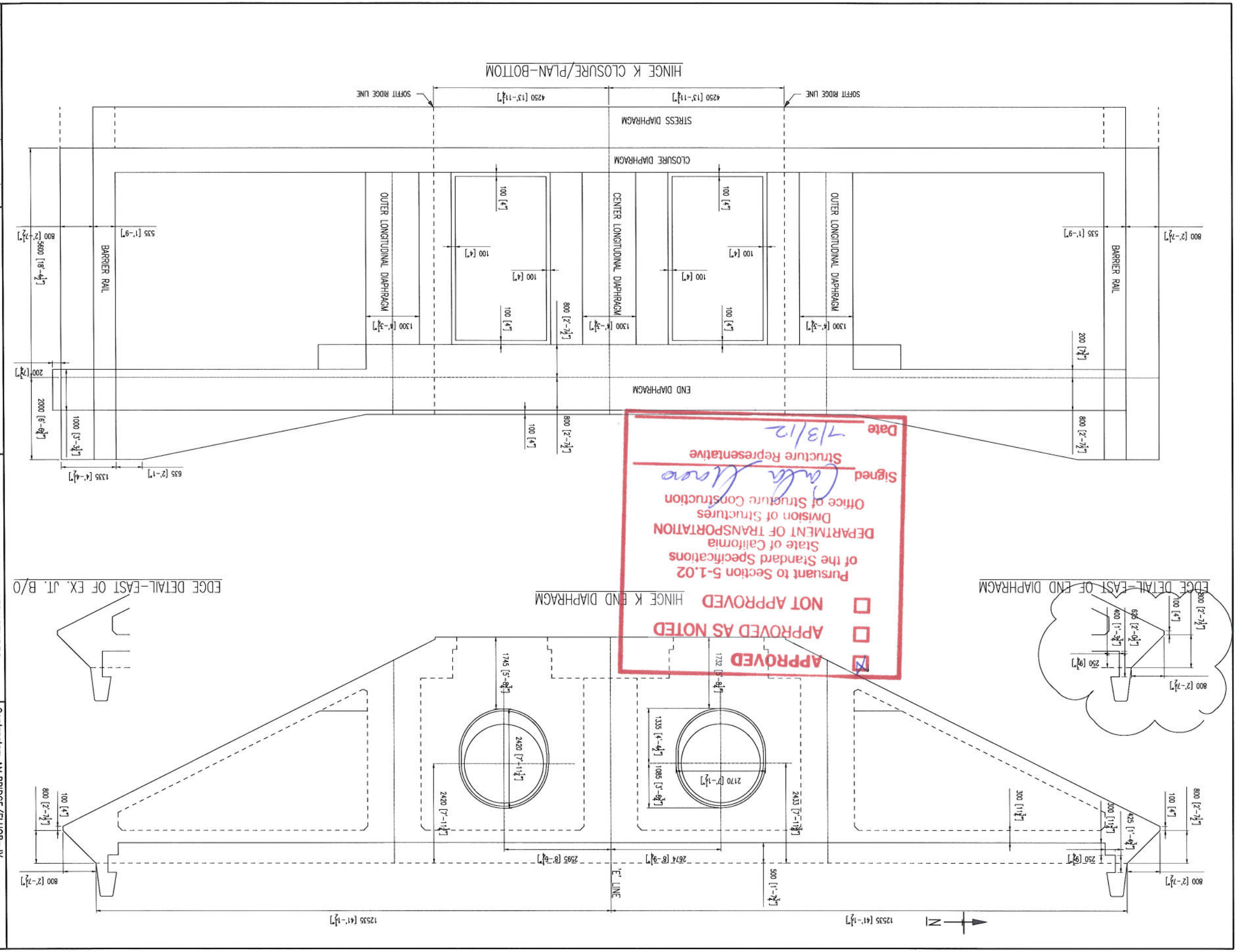

APPROVED

☐ APPROVED AS NOTED

☐ NOT APPROVED

Pursuant to Section 5-1.02
of the Standard Specifications
State of California
DEPARTMENT OF TRANSPORTATION
Division of Structures
Office of Structure Construction

Signed [signature]
Structure Representative

Date 7/3/12

No.	Description	Date	By
	FOR REVIEW	06/08/2012	RJC
	REVI PER REVIEW	06/28/2012	RJC
	FOR PLACING	XX/XX/2012	RJC

The full intent and purpose of this drawing is the placing of reinforcing steel bars ONLY. It is NOT to be used as a means of communication between the Architect, Engineer, Contractor or any other Sub-Trades.

Harris Salinas Rebar INC.
355 SOUTH VASCO ROAD, LIVERMORE, CALIFORNIA 94550
TEL. (925) 373-0733 FAX. (925) 373-0136

Project: YBI TRANSITION STRUCTURES
EASTBOUND BRIDGE

Drawing: HINGE KE CLOSURE
ELEVATION/PLAN

Contractor: AM.BRIDGE/FLUOR-JV
Customer: CAL TRANS
Refer to Run No: KE-SB

Date	Drawn	Chkd.	Contract No.	Dwg. No.
05/31/2012	RJC		13114174	KE-2

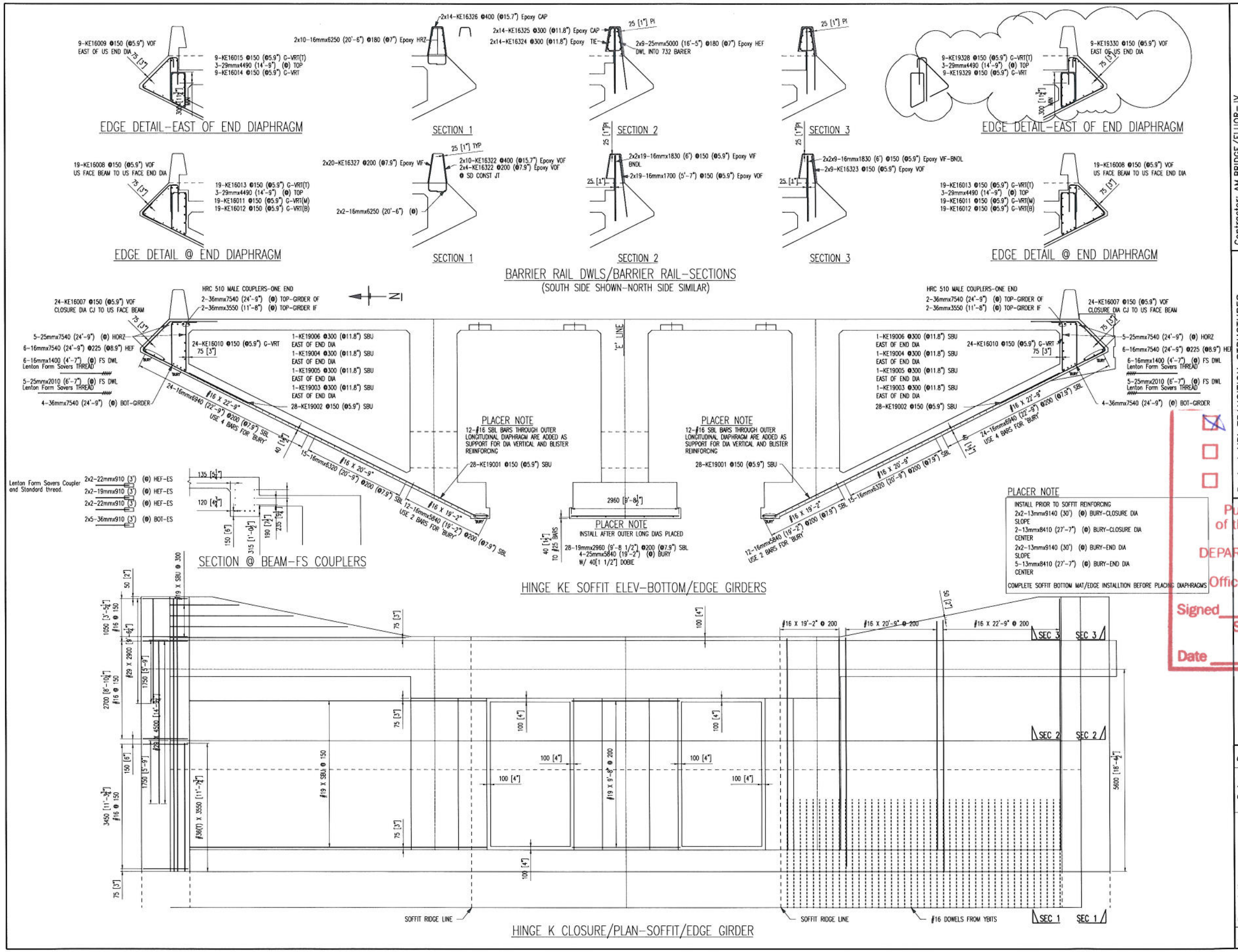

Contractor: AM.BRIDGE/FLUOR-JV
Customer: CAL TRANS
Refer to Run No: KW-SB
Date 05/31/2012 | Drawn RJC | Chkd. | Contract No. 13114174 | Dwg. No. KE-3

Project: YBI TRANSITION STRUCTURES EASTBOUND BRIDGE

Drawing: HINGE KE CLOSURE SOFFIT BOT/EDGE GIRDER-ELE/PLAN

☒ APPROVED
☐ APPROVED AS NOTED
☐ NOT APPROVED

Pursuant to Section 5-1.02 of the Standard Specifications
State of California
DEPARTMENT OF TRANSPORTATION
Division of Structures
Office of Structure Construction
Signed [signature]
Structure Representative
Date 7/3/12

Harris Sarnas Inc.
355 SOUTH VASCO ROAD, LIVERMORE, CALIFORNIA 94550
TEL. (925) 373-0733 FAX. (925) 373-0735

No.	Description	Date	By
	FOR REVIEW	06/08/2012	RJC
	REV PER REVIEW	06/28/2012	RJC
	FOR PLACING	XX/XX/2012	RJC

The full intent and purpose of this drawing is the placing of reinforcing steel bars ONLY. It is NOT to be used as a means of communication between the Architect, Engineer, Contractor or any other Sub-trades.

SOFFIT-BOTTOM/EDGE GIRDERS BAR LIST

Bar Mark	Qty	Size	Total length	Type	'A'	'B'	'C'	'D'	'E'	'F'	'G'	'H'	'J'	'K'	'O'	'R'
	7	13mm	27'7"			27'7"										
	8	13mm	29'11 ¼"			29'11 ¼"										
	12	29mm	14'8 ¼"			14'8 ¼"										
	48	16mm	22'9 ¼"			22'9 ¼"										
	24	16mm	19'2"			19'2"										
	30	16mm	20'8 ¼"			20'8 ¼"										
	28	19mm	9'8 ½"			9'8 ½"										
	4	25mm	19'2"			19'2"										
	12	16mm	24'8 ¼"			24'8 ¼"										
	10	25mm	24'8 ¼"			24'8 ¼"										
	8	36mm	24'8 ¼"			24'8 ¼"										
	4	36mm	11'7 ¼"			11'7 ¼"										
	4	36mm	24'8 ¼"			24'8 ¼"										
	10	25mm	6'7 ¼"			6'7 ¼"										
	12	16mm	4'7"			4'7"										
	4	19mm	2'11 ¼"			2'11 ¼"										
	10	36mm	2'11 ¼"			2'11 ¼"										
	8	22mm	2'11 ¼"			2'11 ¼"										
	2	19mm	28'4 ¼"			28'4 ¼"										
	4	16mm	20'6"			20'6"										
KE13113	16	13mm	2'5 ¼"	17		1'3 ¼"	7 ½"	6"								
KE16007	48	16mm	9'11 ¼"	H80		4'3 ¼"	3'8"	2'				2'7"	9 ¼"	2'7"	1'10"	
KE16008	38	16mm	6'4 ¼"	H80		8 ¼"	3'8"	2'				2'7"	9 ¼"	2'7"	1'10"	
KE16009	9	16mm	6'10"	H82	9 ¼"	4"	3'8"	2'				2'7"	9 ¼"	2'7"	1'10"	
KE16010	48	16mm	11'8 ¼"	H87	9 ¼"	3'11 ¼"	1'5 ¼"	4'7"	9 ¼"			1'3 ¼"	7"	7 ¼"	4'7"	
KE16011	38	16mm	6'1 ½"	T7		2'5 ¼"	1'3 ¼"	2'5 ¼"								
KE16012	38	16mm	8'8"	T7			3'11 ¼"	1'5 ¼"	3'3 ¼"			1'3 ¼"		7 ¼"		
KE16013	38	16mm	5'6 ¼"	T7		2'5 ¼"	7 ¼"	2'5 ¼"								
KE16014	9	16mm	9'8 ¼"	T7	6"	1'3 ¼"	3'3 ¼"	1'5 ¼"	2'8"		6"	1'3 ¼"		7 ¼"		
KE16015	9	16mm	7'0 ¼"	T7		2'5 ¼"	7 ¼"	3'11 ¼"								
KE19001	56	19mm	29'11 ½"	3		28'9 ¼"	1'1 ¼"					6 ¼"		1'0 ¼"	29'9 ¼"	
KE19002	56	19mm	11'11 ¼"	21			10'8"	1'3 ¼"				1'3 ¼"		4"		
KE19003	2	19mm	27'8 ¼"	21			26'4 ½"	1'3 ¼"				1'3 ¼"		4"		
KE19004	2	19mm	16'9 ½"	21			15'5 ¼"	1'3 ¼"				1'3 ¼"		4"		
KE19005	2	19mm	22'3"	21			20'11 ¼"	1'3 ¼"				1'3 ¼"		4"		
KE19006	2	19mm	11'4 ¼"	21			10'0 ½"	1'3 ¼"				1'3 ¼"		4"		
KE19328	9	19mm	7'0 ¼"	17		2'5 ¼"	7 ¼"	3'11 ¼"								
KE19329	9	19mm	9'8 ¼"	T7	6"	1'3 ¼"	3'3 ¼"	1'5 ¼"	2'8"		6"	1'3 ¼"		7 ¼"		
KE19330	9	19mm	6'10"	H82	9 ¼"	4"	3'8"	2'				2'7"	9 ¼"	2'7"	1'10"	

ALL DIMENSIONS ARE OUT TO OUT
ALL STEEL A706 Grade 60
FDN
FDN

FOR TYPICAL BAR BENDS REFER TO
CRSI MANUAL OF STANDARD PRACTICE

KE-SB 13662.08lbs

SOFFIT-TOP MAT BAR LIST

Bar Mark	Qty	Size	Total length	Type	'A'	'B'	'C'	'D'	'E'	'F'	'G'	'H'	'J'	'K'	'O'	'R'
	40	16mm	22'9 ¼"			22'9 ¼"										
	2	16mm	19'2"			19'2"										
	28	16mm	20'8 ¼"			20'8 ¼"										
	28	19mm	9'8 ½"			9'8 ½"										
	10	36mm	8'7 ¼"			8'7 ¼"										
	5	36mm	9'8 ½"			9'8 ½"										
	4	19mm	20'4"			20'4"										
	8	25mm	4'			4'										
	8	25mm	20'10"			20'10"										
KE13113	110	13mm	2'5 ¼"	17		1'3 ¼"	7 ½"	6"								
KE13265	60	13mm	3'6 ¼"	27		11 ¼"	6 ¼"	6"	6 ¼"	11 ¼"						
KE19254	2	19mm	19'6 ¼"	21			18'2 ½"	1'3 ¼"				1'3 ¼"		4"		
KE19255	2	19mm	24'11 ½"	21			23'7 ¼"	1'3 ¼"				1'3 ¼"		4"		
KE19256	66	19mm	26'1"	21			24'9 ¼"	1'3 ¼"				1'3 ¼"		4"		
KE19257	2	19mm	8'7 ½"	21			7'3 ¼"	1'3 ¼"				1'3 ¼"		4"		
KE19258	2	19mm	14'1"	21			12'9 ¼"	1'3 ¼"				1'3 ¼"		4"		
KE19259	66	19mm	15'4 ¼"	3		14'6"	10 ¼"					5 ½"		9 ½"	15'3"	
KE43260	40	43mm	12'11 ½"	H38		12'11 ½"									12'5 ½"	
KE43261	38	43mm	14'11 ¼"	H38		14'11 ¼"									14'5 ¼"	
KE43262	16	43mm	20'2 ¼"	H38		20'2 ¼"									19'8 ¼"	
KE43263	25	43mm	16'3"	H38		16'3"									15'9"	
KE43264	25	43mm	18'2 ½"	H38		18'2 ½"									17'8 ½"	

ALL DIMENSIONS ARE OUT TO OUT
ALL STEEL A706 Grade 60
FDN
FDN

FOR TYPICAL BAR BENDS REFER TO
CRSI MANUAL OF STANDARD PRACTICE

KE-ST 25358.77lbs

BARRIER RAIL DOWELS-EPOXY BAR LIST

Bar Mark	Qty	Size	Total length	Type	'A'	'B'	'C'	'D'	'E'	'F'	'G'	'H'	'J'	'K'	'O'	'R'
	94	16mm	6'			6'										
	38	16mm	5'7"			5'7"										
KE16322	28	16mm	4'2 ½"	4	9 ¼"	9 ½"	2'7"					4 ¼"		2'7"	3'4 ¼"	
KE16323	18	16mm	5'7"	3		3'0 ¼"	2'6 ¼"					4"		2'6 ¼"	5'6 ½"	
KE16327	40	16mm	4'2 ½"	4	9 ¼"	9 ½"	2'7"					5 ½"		2'6 ¼"	3'4 ¼"	

ALL DIMENSIONS ARE OUT TO OUT
ALL STEEL A706 Grade 60

FOR TYPICAL BAR BENDS REFER TO
CRSI MANUAL OF STANDARD PRACTICE

KE-BD 1212.13lbs

BARRIER RAIL-EPOXY BAR LIST

Bar Mark	Qty	Size	Total length	Type	'A'	'B'	'C'	'D'	'E'	'F'	'G'	'H'	'J'	'K'	'O'	'R'
	18	25mm	16'4 ¼"			16'4 ¼"										
	20	16mm	20'6"			20'6"										
KE16324	28	16mm	5'3 ¼"	H61	2'	1'3 ¼"	2'					2'		3 ½"		
KE16325	28	16mm	2'4"	22			9 ¼"	8 ¼"	9 ¼"			9 ¼"		9 ¼"	10 ¼"	
KE16326	28	16mm	2'6"	22			9 ¼"	10 ¼"	9 ¼"			9 ¼"		9 ¼"	1'0 ½"	

ALL DIMENSIONS ARE OUT TO OUT
ALL STEEL A706 Grade 60

FOR TYPICAL BAR BENDS REFER TO
CRSI MANUAL OF STANDARD PRACTICE

KE-BR 1512.04lbs

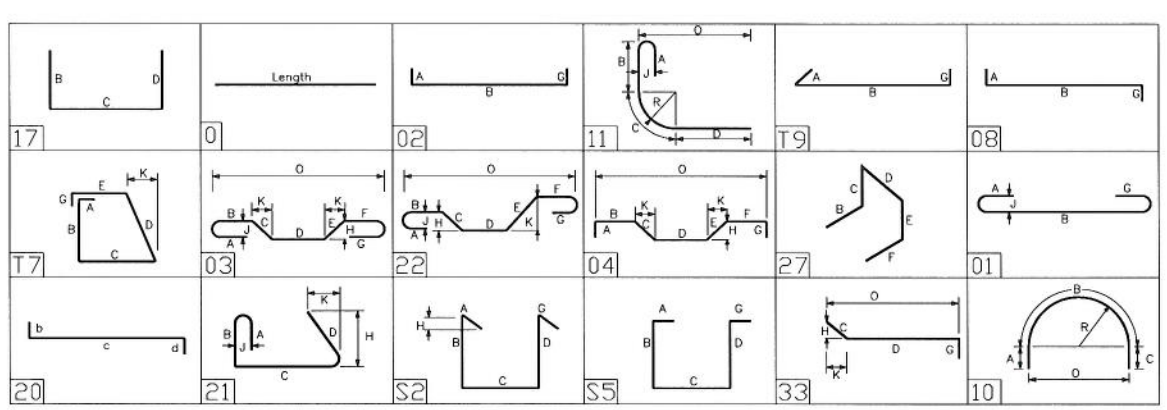

APPROVED
APPROVED AS NOTED
NOT APPROVED

Pursuant to Section 5-1.02
of the Standard Specifications
State of California
DEPARTMENT OF TRANSPORTATION
Division of Structures
Office of Structure Construction

Signed
Structure Representative
Date 7/13/12

Contractor: AM.BRIDGE/FLUOR-JV
Customer: CAL TRANS
Refer to Run No: KE-SB
Date 05/31/2012 | Drawn RJC | Chkd. | Contract No. 13114174 | Dwg. No. KE-BL1

Project: YBI TRANSITION STRUCTURES
EASTBOUND BRIDGE

Drawing: HINGE KE CLOSURE
SOFFIT BAR LISTS

Harris Salinas Rebar INC.
355 SOUTH VASCO ROAD, LIVERMORE, CALIFORNIA 94550
TEL: (925) 373-0733 FAX: (925) 373-0136

No.	Description	Date	By
	FOR REVIEW	06/08/2012	RJC
	REVISED/RE-SUB	06/28/2012	RJC
	FOR PLACING	XX/XX/2012	RJC

The cut, insert and purpose of this drawing is the placing of reinforcing steel bars ONLY. It is NOT to be used as a means of determining the actual, finished, lineal, lineal, lineal, or any other Sub-trades.

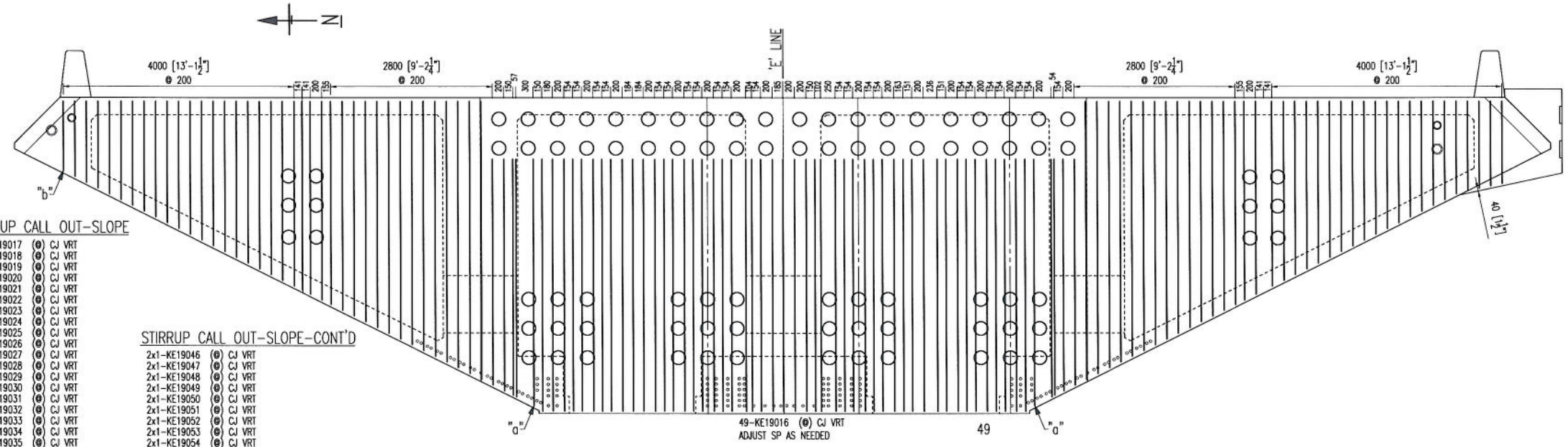

STIRRUP CALL OUT-SLOPE

"a"
2x1-KE19017 (@) CJ VRT
2x1-KE19018 (@) CJ VRT
2x1-KE19019 (@) CJ VRT
2x1-KE19020 (@) CJ VRT
2x1-KE19021 (@) CJ VRT
2x1-KE19022 (@) CJ VRT
2x1-KE19023 (@) CJ VRT
2x1-KE19024 (@) CJ VRT
2x1-KE19025 (@) CJ VRT
2x1-KE19026 (@) CJ VRT
2x1-KE19027 (@) CJ VRT
2x1-KE19028 (@) CJ VRT
2x1-KE19029 (@) CJ VRT
2x1-KE19030 (@) CJ VRT
2x1-KE19031 (@) CJ VRT
2x1-KE19032 (@) CJ VRT
2x1-KE19033 (@) CJ VRT
2x1-KE19034 (@) CJ VRT
2x1-KE19035 (@) CJ VRT
2x1-KE19036 (@) CJ VRT
2x1-KE19037 (@) CJ VRT
2x1-KE19038 (@) CJ VRT
2x1-KE19039 (@) CJ VRT
2x1-KE19040 (@) CJ VRT
2x1-KE19041 (@) CJ VRT
2x1-KE19042 (@) CJ VRT
2x1-KE19043 (@) CJ VRT
2x1-KE19044 (@) CJ VRT
2x1-KE19045 (@) CJ VRT

STIRRUP CALL OUT-SLOPE-CONT'D

2x1-KE19046 (@) CJ VRT
2x1-KE19047 (@) CJ VRT
2x1-KE19048 (@) CJ VRT
2x1-KE19049 (@) CJ VRT
2x1-KE19050 (@) CJ VRT
2x1-KE19051 (@) CJ VRT
2x1-KE19052 (@) CJ VRT
2x1-KE19053 (@) CJ VRT
2x1-KE19054 (@) CJ VRT
2x1-KE19055 (@) CJ VRT
1-KE19056 (@) CJ VRT-N 1-KE19057 (@) CJ VRT-S
1-KE19058 (@) CJ VRT-N 1-KE19059 (@) CJ VRT-S
1-KE19060 (@) CJ VRT-N 1-KE19061 (@) CJ VRT-S
"b" 1-KE19062 (@) CJ VRT-N 1-KE19063 (@) CJ VRT-S

HINGE 'KE' CLOSURE DIAPHRAGM
CJ FACE STIRRUP ELEVATION

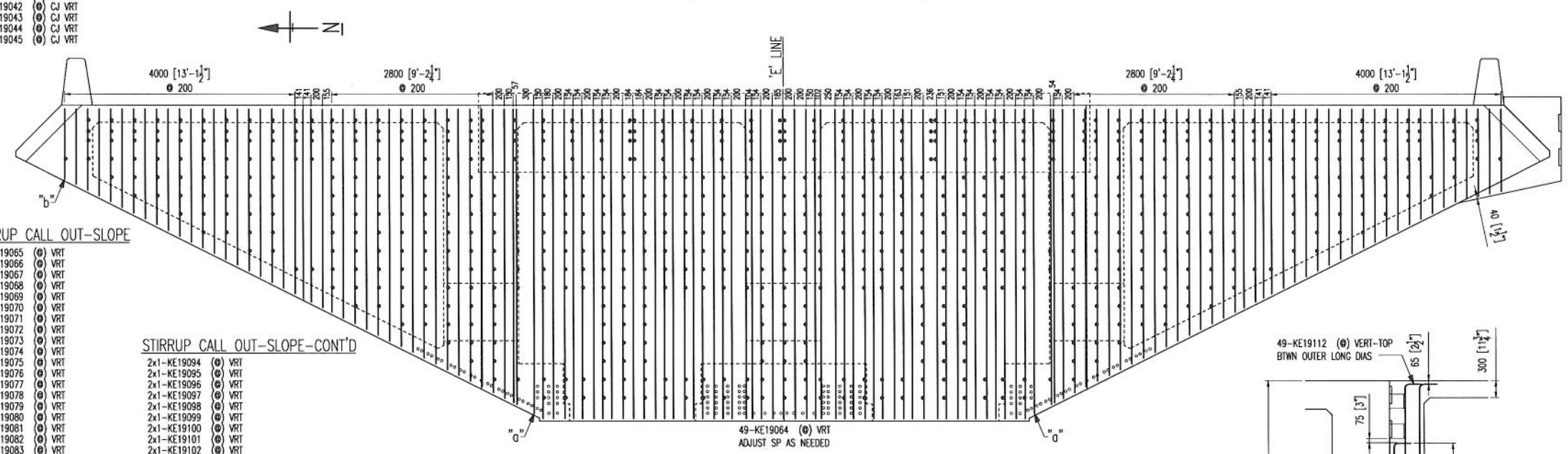

STIRRUP CALL OUT-SLOPE

"a"
2x1-KE19065 (@) VRT
2x1-KE19066 (@) VRT
2x1-KE19067 (@) VRT
2x1-KE19068 (@) VRT
2x1-KE19069 (@) VRT
2x1-KE19070 (@) VRT
2x1-KE19071 (@) VRT
2x1-KE19072 (@) VRT
2x1-KE19073 (@) VRT
2x1-KE19074 (@) VRT
2x1-KE19075 (@) VRT
2x1-KE19076 (@) VRT
2x1-KE19077 (@) VRT
2x1-KE19078 (@) VRT
2x1-KE19079 (@) VRT
2x1-KE19080 (@) VRT
2x1-KE19081 (@) VRT
2x1-KE19082 (@) VRT
2x1-KE19083 (@) VRT
2x1-KE19084 (@) VRT
2x1-KE19085 (@) VRT
2x1-KE19086 (@) VRT
2x1-KE19087 (@) VRT
2x1-KE19088 (@) VRT
2x1-KE19089 (@) VRT
2x1-KE19090 (@) VRT
2x1-KE19091 (@) VRT
2x1-KE19092 (@) VRT
2x1-KE19093 (@) VRT

STIRRUP CALL OUT-SLOPE-CONT'D

2x1-KE19094 (@) VRT
2x1-KE19095 (@) VRT
2x1-KE19096 (@) VRT
2x1-KE19097 (@) VRT
2x1-KE19098 (@) VRT
2x1-KE19099 (@) VRT
2x1-KE19100 (@) VRT
2x1-KE19101 (@) VRT
2x1-KE19102 (@) VRT
2x1-KE19103 (@) VRT
1-KE19104 (@) VRT-N 1-KE19105 (@) VRT-S
1-KE19106 (@) VRT-N 1-KE19107 (@) VRT-S
1-KE19108 (@) VRT-N 1-KE19109 (@) VRT-S
"b" 1-KE19110 (@) VRT-N 1-KE19111 (@) VRT-S

HINGE 'KE' CLOSURE DIAPHRAGM
US FACE STIRRUP ELEVATION

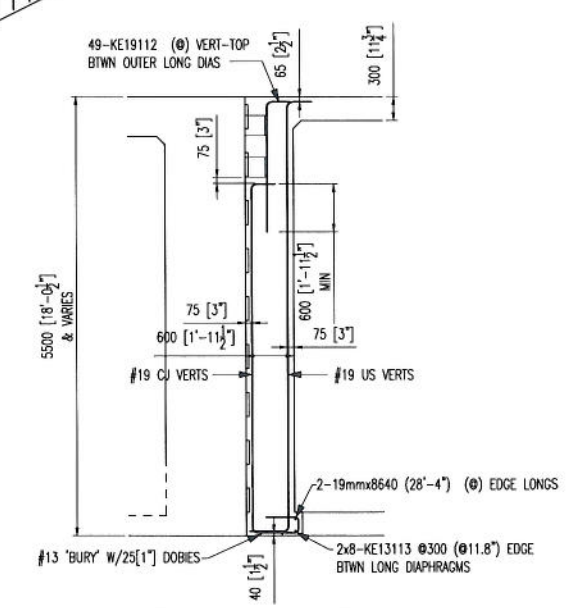

CLOSURE DIAPHRAGM-SECTION

PLACER NOTE:

INSTALL SD CONSTRUCTION JOINT FACE - COMPLETE
FIELD OPTION TO COMPLETE US FACE - SLOPES ONLY
INSTALL US FACE BETWEEN OUTER LONGITUDINAL DIAPHRAGMS
AFTER OUTER LONGITUDINAL DIAPHRAGMS ARE COMPLETE

☒ APPROVED
☐ APPROVED AS NOTED
☐ NOT APPROVED

Pursuant to Section 5-1.02
of the Standard Specifications
State of California
DEPARTMENT OF TRANSPORTATION
Division of Structures
Office of Structure Construction

Signed _____
Structure Representative

Date 7/3/12

Contractor: AM.BRIDGE/FLUOR-JV
Customer: CAL TRANS
Refer to Run No: KE-CD

Date	Drawn	Chkd.	Contract No.	Dwg. No.
05/31/2012	RJC		13114174	KE-4

Project: YBI TRANSITION STRUCTURES
EASTBOUND BRIDGE

Drawing: HINGE KE CLOSURE
CLOSURE DIA STIRRUP-ELEV/SECT.

Harris & Salinas Rebar INC.
355 SOUTH VASCO ROAD, LIVERMORE, CALIFORNIA 94550
TEL: (925) 373-0733 FAX: (925) 373-0136

No.	Description	Date	By
	FOR REVIEW	06/08/2012	RJC
	REV PER REVIEW	06/28/2012	RJC
	FOR PLACING	XX/XX/2012	RJC

The full intent and purpose of this drawing is the placing of reinforcing steel bars ONLY, as shown, in a manner consistent with the Architect's Engineer's contract or any other sub-trades.

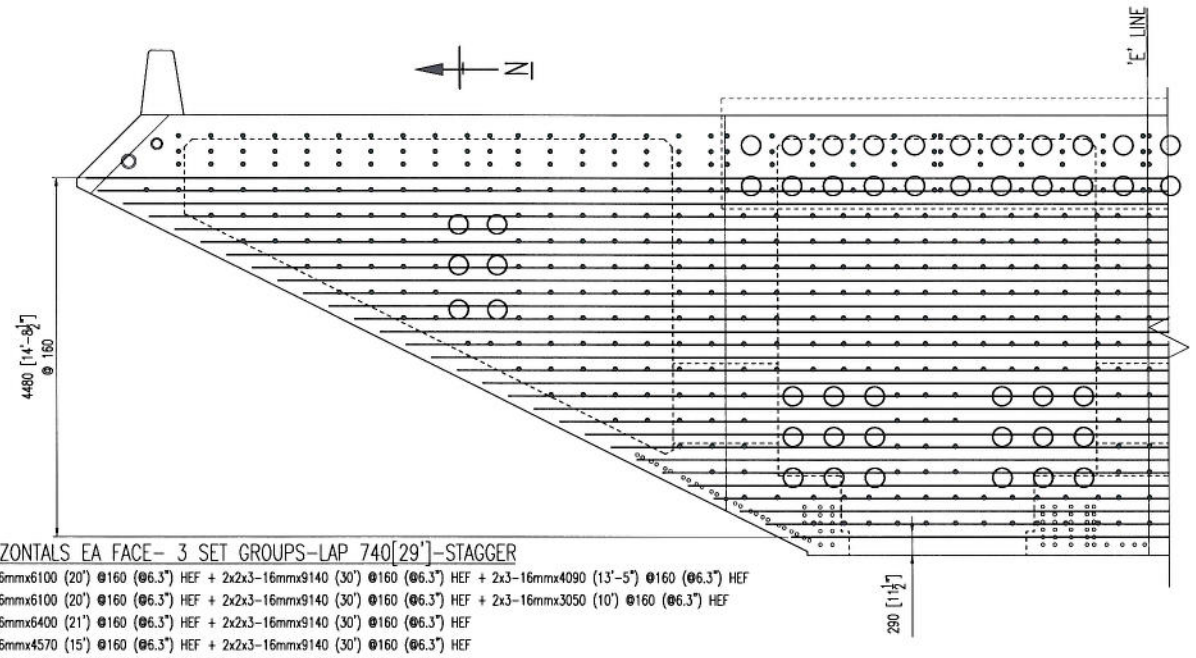

HORIZONTALS EA FACE- 3 SET GROUPS-LAP 740[29']-STAGGER

"a" 2x3-16mmx6100 (20') @160 (@6.3") HEF + 2x2x3-16mmx9140 (30') @160 (@6.3") HEF + 2x3-16mmx4090 (13'-5") @160 (@6.3") HEF
2x3-16mmx6100 (20') @160 (@6.3") HEF + 2x2x3-16mmx9140 (30') @160 (@6.3") HEF + 2x3-16mmx3050 (10') @160 (@6.3") HEF
2x3-16mmx6400 (21') @160 (@6.3") HEF + 2x2x3-16mmx9140 (30') @160 (@6.3") HEF
2x3-16mmx4570 (15') @160 (@6.3") HEF + 2x2x3-16mmx9140 (30') @160 (@6.3") HEF
2x3-16mmx3050 (10') @160 (@6.3") HEF + 2x2x3-16mmx9140 (30') @160 (@6.3") HEF
2x3-16mmx6100 (20') @160 (@6.3") HEF + 2x3-16mmx9140 (30') @160 (@6.3") HEF + 2x3-16mmx3660 (12') @160 (@6.3") HEF
2x3-16mmx6100 (20') @160 (@6.3") HEF + 2x3-16mmx9140 (30') @160 (@6.3") HEF + 2x3-16mmx1830 (6') @160 (@6.3") HEF
2x3-16mmx4570 (15') @160 (@6.3") HEF + 2x3-16mmx9140 (30') @160 (@6.3") HEF
2x3-16mmx3050 (10') @160 (@6.3") HEF + 2x3-16mmx9140 (30') @160 (@6.3") HEF
2x1-16mmx9140 (30') @160 (@6.3") HEF
"b" 2x1-16mmx8840 (29') @160 (@6.3") HEF

HINGE KE CLOSURE DIA. HORIZONTALS-ELEVATION

(SIMILAR ABOUT C/L)

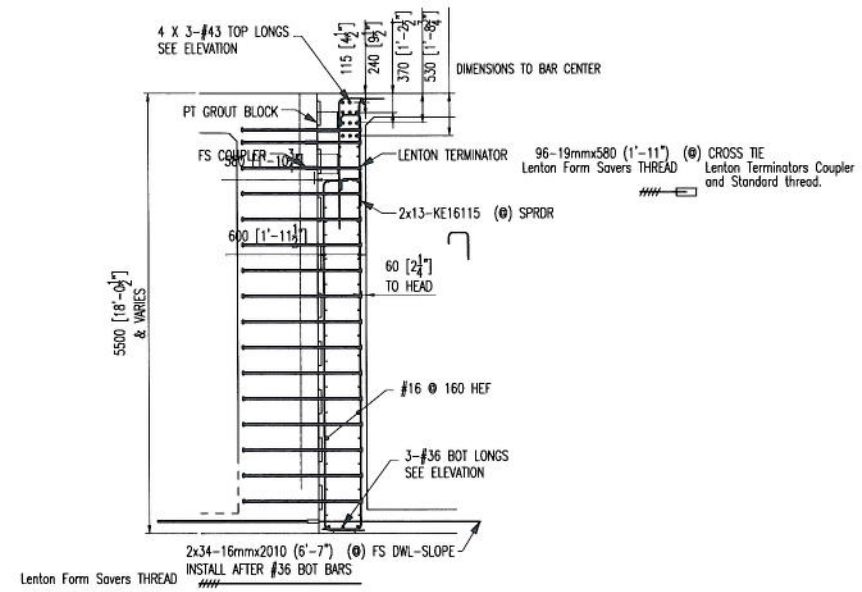

CLOSURE DIAPHRAGM-SECTION

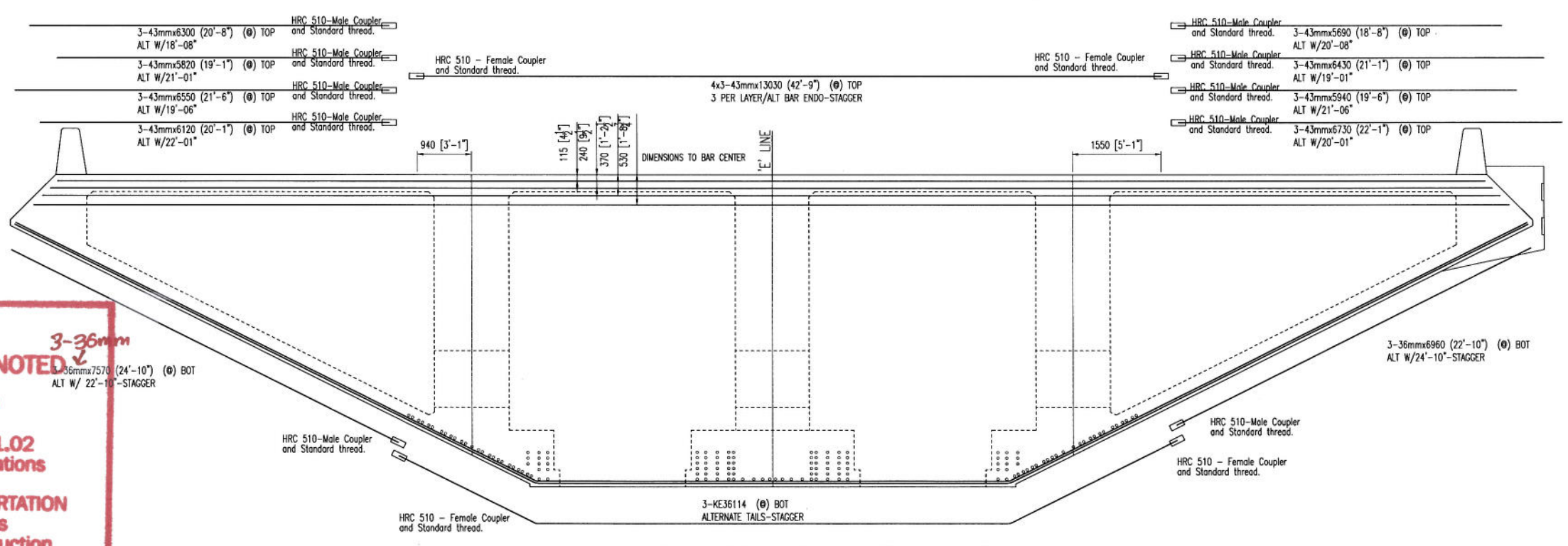

HINGE KE CLOSURE DIA. TOP & BOTTOM-ELEVATION

APPROVED
APPROVED AS NOTED
NOT APPROVED
Pursuant to Section 5-1.02
of the Standard Specifications
State of California
DEPARTMENT OF TRANSPORTATION
Division of Structures
Office of Structure Construction
Signed
Structure Representative
Date 7/3/12

Contractor: AM.BRIDGE/FLUOR-JV
Customer: CAL TRANS
Refer to Run No: KE-CDH
Date 05/31/2012 | Drawn RJC | Chkd. | Contract No. 13114174 | Dwg. No. KE-5

Project: YBI TRANSITION STRUCTURES
EASTBOUND BRIDGE

Drawing: HINGE KE CLOSURE
CLOSURE DIA HORZ-ELEV/SECT.

Harris & Bolar INC.
355 SOUTH VASCO ROAD, LIVERMORE, CALIFORNIA 94550
TEL: (925) 373-0733 FAX: (925) 373-0738

No.	Description	Date	By
	FOR REVIEW	06/08/2012	RJC
	REV PER REVIEW	06/28/2012	RJC
	FOR PLACING	XX/XX/2012	RJC

The cut, bend and weight of this drawing is the placing of reinforcing steel "be-a" ONLY. It is NOT to be used as a frame of reference for other trades. The architect, engineer, contractor or any other Sub-trades.

CLOSURE DIA VERTICALS BAR LIST–PART

Bar Mark	Qty	Size	Total length	Type	'A'	'B'	'C'	'D'	'E'	'F'	'G'	'H'	'J'	'K'	'O'	'R'
KE19016	49	19mm	17'0 ¼"	17		11 ¾"	14'4 ½"	1'7 ¾"								
KE19017	2	19mm	16'8 ½"	17		11 ¾"	14'1"	1'7 ¾"								
KE19018	2	19mm	16'2 ½"	17		11 ¾"	13'7"	1'7 ¾"								
KE19019	2	19mm	16'1 ¼"	17		11 ¾"	13'5 ¾"	1'7 ¾"								
KE19020	2	19mm	15'10 ½"	17		11 ¾"	13'2 ¾"	1'7 ¾"								
KE19021	2	19mm	15'6 ½"	17		11 ¾"	12'10 ¾"	1'7 ¾"								
KE19022	2	19mm	18'6 ½"	17		11 ¾"	15'10 ½"	1'7 ¾"								
KE19023	2	19mm	18'2 ½"	17		11 ¾"	15'6 ½"	1'7 ¾"								
KE19024	2	19mm	17'10 ½"	17		11 ¾"	15'2 ¾"	1'7 ¾"								
KE19025	2	19mm	17'6 ¼"	17		11 ¾"	14'10 ¾"	1'7 ¾"								
KE19026	2	19mm	17'2 ¼"	17		11 ¾"	14'6 ¾"	1'7 ¾"								
KE19027	2	19mm	16'10 ¼"	17		11 ¾"	14'2 ¾"	1'7 ¾"								
KE19028	2	19mm	16'6 ½"	17		11 ¾"	13'11"	1'7 ¾"								
KE19029	2	19mm	16'2 ½"	17		11 ¾"	13'7"	1'7 ¾"								
KE19030	2	19mm	15'10 ½"	17		11 ¾"	13'3"	1'7 ¾"								
KE19031	2	19mm	15'6 ½"	17		11 ¾"	12'11"	1'7 ¾"								
KE19032	2	19mm	15'2 ¾"	17		11 ¾"	12'7 ¼"	1'7 ¾"								
KE19033	2	19mm	14'10 ¾"	17		11 ¾"	12'3 ¼"	1'7 ¾"								
KE19034	2	19mm	14'6 ¾"	17		11 ¾"	11'11 ¼"	1'7 ¾"								
KE19035	2	19mm	14'2 ¾"	17		11 ¾"	11'7 ¼"	1'7 ¾"								
KE19036	2	19mm	14'	17		11 ¾"	11'4 ¼"	1'7 ¾"								
KE19037	2	19mm	13'8 ¼"	17		11 ¾"	11'0 ¼"	1'7 ¾"								
KE19038	2	19mm	13'5 ½"	17		11 ¾"	10'9 ½"	1'7 ¾"								
KE19039	2	19mm	13'2 ¼"	17		11 ¾"	10'6 ¾"	1'7 ¾"								
KE19040	2	19mm	12'10 ¼"	17		11 ¾"	10'2 ¾"	1'7 ¾"								
KE19041	2	19mm	12'6 ½"	17		11 ¾"	9'11"	1'7 ¾"								
KE19042	2	19mm	12'2 ½"	17		11 ¾"	9'7"	1'7 ¾"								
KE19043	2	19mm	11'10 ½"	17		11 ¾"	9'3"	1'7 ¾"								
KE19044	2	19mm	11'6 ½"	17		11 ¾"	8'11"	1'7 ¾"								
KE19045	2	19mm	11'2 ¾"	17		11 ¾"	8'7 ¼"	1'7 ¾"								
KE19046	2	19mm	10'10 ¾"	17		11 ¾"	8'3 ¼"	1'7 ¾"								
KE19047	2	19mm	10'6 ¾"	17		11 ¾"	7'11 ¼"	1'7 ¾"								
KE19048	2	19mm	10'2 ¾"	17		11 ¾"	7'7 ¼"	1'7 ¾"								
KE19049	2	19mm	9'11"	17		11 ¾"	7'3 ½"	1'7 ¾"								
KE19050	2	19mm	9'7"	17		11 ¾"	6'11 ½"	1'7 ¾"								
KE19051	2	19mm	9'3"	17		11 ¾"	6'7 ½"	1'7 ¾"								
KE19052	2	19mm	8'11"	17		11 ¾"	6'3 ½"	1'7 ¾"								
KE19053	2	19mm	8'7 ¼"	17		11 ¾"	5'11 ¾"	1'7 ¾"								
KE19054	2	19mm	8'3 ¼"	17		11 ¾"	5'7 ¾"	1'7 ¾"								
KE19055	2	19mm	7'11 ¼"	17		11 ¾"	5'3 ¾"	1'7 ¾"								
KE19056	1	19mm	7'7 ¼"	17		11 ¾"	4'11 ¾"	1'7 ¾"								
KE19057	1	19mm	7'9 ¼"	17		11 ¾"	5'1 ½"	1'7 ¾"								
KE19058	1	19mm	7'3 ½"	17		11 ¾"	4'8"	1'7 ¾"								
KE19059	1	19mm	7'7 ¼"	17		11 ¾"	4'11 ¾"	1'7 ¾"								
KE19060	1	19mm	6'11 ½"	17		11 ¾"	4'4"	1'7 ¾"								
KE19061	1	19mm	7'6 ¼"	17		11 ¾"	4'10 ¾"	1'7 ¾"								
KE19062	1	19mm	6'7 ½"	17		11 ¾"	4'	1'7 ¾"								
KE19063	1	19mm	7'4 ¼"	17		11 ¾"	4'8 ¾"	1'7 ¾"								
KE19064	49	19mm	20'3 ¾"	20		11 ¾"	17'8 ¼"	1'7 ¾"								
KE19065	2	19mm	20'0 ¼"	20		11 ¾"	17'4 ¾"	1'7 ¾"								
KE19066	2	19mm	19'6 ¼"	20		11 ¾"	16'10 ¾"	1'7 ¾"								
KE19067	2	19mm	19'5"	20		11 ¾"	16'9 ½"	1'7 ¾"								
KE19068	2	19mm	19'2"	20		11 ¾"	16'6 ½"	1'7 ¾"								
KE19069	2	19mm	18'10"	20		11 ¾"	16'2 ½"	1'7 ¾"								
KE19070	2	19mm	18'6"	20		11 ¾"	15'10 ½"	1'7 ¾"								
KE19071	2	19mm	18'2"	20		11 ¾"	15'6 ½"	1'7 ¾"								
KE19072	2	19mm	17'10 ¼"	20		11 ¾"	15'2 ¾"	1'7 ¾"								
KE19073	2	19mm	17'6 ¼"	20		11 ¾"	14'10 ¾"	1'7 ¾"								
KE19074	2	19mm	17'2 ¼"	20		11 ¾"	14'6 ¾"	1'7 ¾"								
KE19075	2	19mm	16'10 ¼"	20		11 ¾"	14'2 ¾"	1'7 ¾"								
KE19076	2	19mm	16'6 ½"	20		11 ¾"	13'11"	1'7 ¾"								
KE19077	2	19mm	16'2 ½"	20		11 ¾"	13'7"	1'7 ¾"								
KE19078	2	19mm	15'10 ½"	20		11 ¾"	13'3"	1'7 ¾"								
KE19079	2	19mm	15'6 ½"	20		11 ¾"	12'11"	1'7 ¾"								
KE19080	2	19mm	15'2 ¾"	20		11 ¾"	12'7 ¼"	1'7 ¾"								
KE19081	2	19mm	14'10 ¾"	20		11 ¾"	12'3 ¼"	1'7 ¾"								

CLOSURE DIA VERTICALS BAR LIST–CONT'D

Bar Mark	Qty	Size	Total length	Type	'A'	'B'	'C'	'D'	'E'	'F'	'G'	'H'	'J'	'K'	'O'	'R'
KE19082	2	19mm	14'6 ¾"	20		11 ¾"	11'11 ¼"	1'7 ¾"								
KE19083	2	19mm	14'2 ¾"	20		11 ¾"	11'7 ¼"	1'7 ¾"								
KE19084	2	19mm	13'11 ¾"	20		11 ¾"	11'4 ¼"	1'7 ¾"								
KE19085	2	19mm	13'7 ¾"	20		11 ¾"	11'0 ¼"	1'7 ¾"								
KE19086	2	19mm	13'5"	20		11 ¾"	10'9 ½"	1'7 ¾"								
KE19087	2	19mm	13'2 ¼"	20		11 ¾"	10'6 ¾"	1'7 ¾"								
KE19088	2	19mm	12'10 ¼"	20		11 ¾"	10'2 ¾"	1'7 ¾"								
KE19089	2	19mm	12'6 ½"	20		11 ¾"	9'11"	1'7 ¾"								
KE19090	2	19mm	12'2 ½"	20		11 ¾"	9'7"	1'7 ¾"								
KE19091	2	19mm	11'10 ½"	20		11 ¾"	9'3"	1'7 ¾"								
KE19092	2	19mm	11'6 ½"	20		11 ¾"	8'11"	1'7 ¾"								
KE19093	2	19mm	11'2 ¾"	20		11 ¾"	8'7 ¼"	1'7 ¾"								
KE19094	2	19mm	10'10 ¾"	20		11 ¾"	8'3 ¼"	1'7 ¾"								
KE19095	2	19mm	10'6 ¾"	20		11 ¾"	7'11 ¼"	1'7 ¾"								
KE19096	2	19mm	10'2 ¾"	20		11 ¾"	7'7 ¼"	1'7 ¾"								
KE19097	2	19mm	9'11"	20		11 ¾"	7'3 ½"	1'7 ¾"								
KE19098	2	19mm	9'7"	20		11 ¾"	6'11 ½"	1'7 ¾"								
KE19099	2	19mm	9'3"	20		11 ¾"	6'7 ½"	1'7 ¾"								
KE19100	2	19mm	8'11"	20		11 ¾"	6'3 ½"	1'7 ¾"								
KE19101	2	19mm	8'7 ¼"	20		11 ¾"	5'11 ¾"	1'7 ¾"								
KE19102	2	19mm	8'3 ¼"	20		11 ¾"	5'7 ¾"	1'7 ¾"								
KE19103	2	19mm	7'11 ¼"	20		11 ¾"	5'3 ¾"	1'7 ¾"								
KE19104	1	19mm	7'7 ¼"	20		11 ¾"	4'11 ¾"	1'7 ¾"								
KE19105	1	19mm	7'9"	20		11 ¾"	5'1 ½"	1'7 ¾"								
KE19106	1	19mm	7'3 ½"	20		11 ¾"	4'8"	1'7 ¾"								
KE19107	1	19mm	7'7 ¼"	20		11 ¾"	4'11 ¾"	1'7 ¾"								
KE19108	1	19mm	6'11 ½"	20		11 ¾"	4'4"	1'7 ¾"								
KE19109	1	19mm	7'5 ¼"	20		11 ¾"	4'10 ¾"	1'7 ¾"								
KE19110	1	19mm	6'7 ½"	20		11 ¾"	4'	1'7 ¾"								
KE19111	1	19mm	7'4 ¼"	20		11 ¾"	4'8 ¾"	1'7 ¾"								
KE19112	49	19mm	6'6 ¾"	2	11 ¾"	5'7"										

ALL DIMENSIONS ARE OUT TO OUT
ALL STEEL A706 Grade 60

FOR TYPICAL BAR BENDS REFER TO
CRSI MANUAL OF STANDARD PRACTICE

KE-CDS 6642.88lbs

CLOSURE DIA HORIZONTALS BAR LIST

Bar Mark	Qty	Size	Total length	Type	'A'	'B'	'C'	'D'	'E'	'F'	'G'	'H'	'J'	'K'	'O'	'R'
	12	16mm	15'			15'										
	86	16mm	29'11 ¾"			29'11 ¾"										
	2	16mm	29'			29'										
	18	16mm	10'			10'										
	24	16mm	20'0 ¼"			20'0 ¼"										
	6	16mm	21'			21'										
	6	16mm	6'			6'										
	6	16mm	12'			12'										
	6	16mm	13'5"			13'5"										
	3	36mm	24'10"			24'10"										
	3	36mm	22'10"			22'10"										
	12	43mm	42'9"			42'9"										
	3	43mm	21'5 ¾"			21'5 ¾"										
	3	43mm	20'1"			20'1"										
	3	43mm	19'1 ¼"			19'1 ¼"										
	3	43mm	20'8"			20'8"										
	3	43mm	19'5 ¾"			19'5 ¾"										
	3	43mm	22'1"			22'1"										
	3	43mm	21'1 ¼"			21'1 ¼"										
	3	43mm	18'8"			18'8"										
	68	16mm	6'7 ¼"			6'7 ¼"										
	96	19mm	1'10 ¾"			1'10 ¾"										
KE16115	26	16mm	2'5 ½"	17		1'1 ¾"	9 ¾"	6"								
KE36114	3	36mm	46'9"	22			8'9"	27'2 ¾"	10'9 ¼"			4'0 ½"		4'11"	44'8 ¼"	

ALL DIMENSIONS ARE OUT TO OUT
ALL STEEL A706 Grade 60

FOR TYPICAL BAR BENDS REFER TO
CRSI MANUAL OF STANDARD PRACTICE

KE-CDH 13922.79lbs

No.	Description	Date	By
	FOR REVIEW	06/08/2012	RJC
	REVISED/RE-SUB	06/28/2012	RJC
	FOR PLACING	XX/XX/2012	RJC

The full intent and purpose of this drawing is the placing of reinforcing steel bars ONLY. It is NOT to be used as a means of communication between the Architect, Engineer, Contractor or any other Sub-trades.

Harris Salinas Rebar INC.
355 SOUTH VASCO ROAD, LIVERMORE, CALIFORNIA 94550
TEL. (925) 373-0733 FAX. (925) 373-0136

Project: YBI TRANSITION STRUCTURES EASTBOUND BRIDGE
Drawing: HINGE KE CLOSURE CLOSURE DIA BAR LISTS

Contractor: AM.BRIDGE/FLUOR-JV
Customer: CAL TRANS
Refer to Run No: KW-CD

Date	Drawn	Chkd.	Contract No.	Dwg. No.
05/31/2012	RJC		13114174	KE-BL2

APPROVED
APPROVED AS NOTED
NOT APPROVED
Pursuant to Section 5-1.02 of the Standard Specifications
State of California
DEPARTMENT OF TRANSPORTATION
Division of Structures
Office of Structure Construction
Signed: [signature]
Structure Representative
Date: 7/3/12

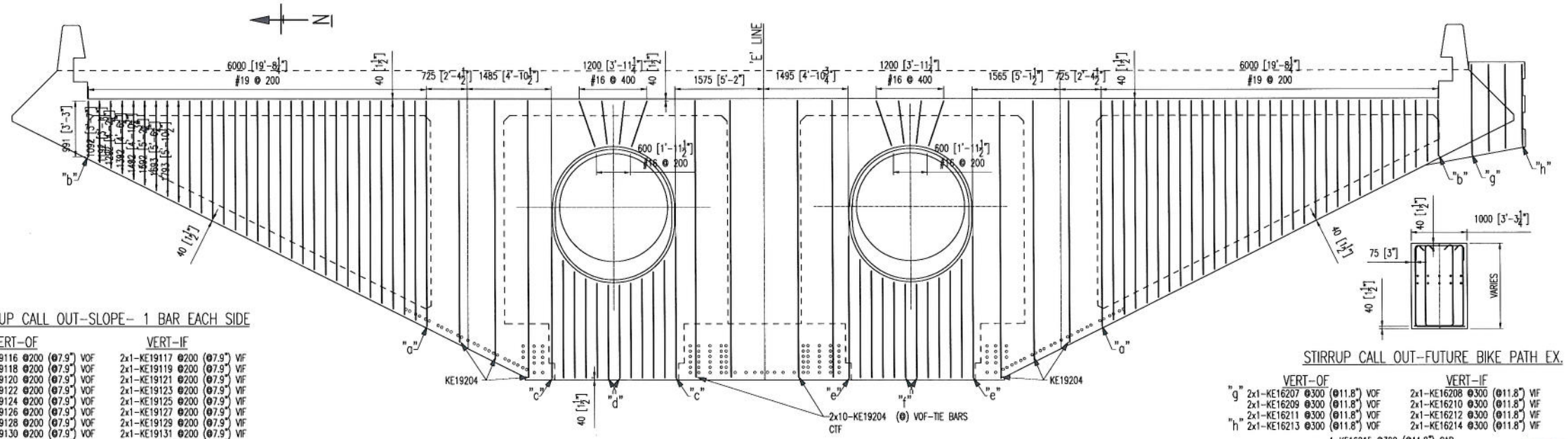

STIRRUP CALL OUT-SLOPE- 1 BAR EACH SIDE

	VERT-OF	VERT-IF
"a"	2x1-KE19116 @200 (@7.9") VOF	2x1-KE19117 @200 (@7.9") VIF
	2x1-KE19118 @200 (@7.9") VOF	2x1-KE19119 @200 (@7.9") VIF
	2x1-KE19120 @200 (@7.9") VOF	2x1-KE19121 @200 (@7.9") VIF
	2x1-KE19122 @200 (@7.9") VOF	2x1-KE19123 @200 (@7.9") VIF
	2x1-KE19124 @200 (@7.9") VOF	2x1-KE19125 @200 (@7.9") VIF
	2x1-KE19126 @200 (@7.9") VOF	2x1-KE19127 @200 (@7.9") VIF
	2x1-KE19128 @200 (@7.9") VOF	2x1-KE19129 @200 (@7.9") VIF
	2x1-KE19130 @200 (@7.9") VOF	2x1-KE19131 @200 (@7.9") VIF
	2x1-KE19132 @200 (@7.9") VOF	2x1-KE19133 @200 (@7.9") VIF
	2x1-KE19134 @200 (@7.9") VOF	2x1-KE19135 @200 (@7.9") VIF
	2x1-KE19136 @200 (@7.9") VOF	2x1-KE19137 @200 (@7.9") VIF
	2x1-KE19138 @200 (@7.9") VOF	2x1-KE19139 @200 (@7.9") VIF
	2x1-KE19140 @200 (@7.9") VOF	2x1-KE19141 @200 (@7.9") VIF
	2x1-KE19142 @200 (@7.9") VOF	2x1-KE19143 @200 (@7.9") VIF
	2x1-KE19144 @200 (@7.9") VOF	2x1-KE19145 @200 (@7.9") VIF
	2x1-KE19146 @200 (@7.9") VOF	2x1-KE19147 @200 (@7.9") VIF
	2x1-KE19148 @200 (@7.9") VOF	2x1-KE19149 @200 (@7.9") VIF
	2x1-KE19150 @200 (@7.9") VOF	2x1-KE19151 @200 (@7.9") VIF
	2x1-KE19152 @200 (@7.9") VOF	2x1-KE19153 @200 (@7.9") VIF
	2x1-KE19154 @200 (@7.9") VOF	2x1-KE19155 @200 (@7.9") VIF
	2x1-KE19156 @200 (@7.9") VOF	2x1-KE19157 @200 (@7.9") VIF
	2x1-KE19158 @200 (@7.9") VOF	2x1-KE19159 @200 (@7.9") VIF
	2x1-KE19160 @200 (@7.9") VOF	2x1-KE19161 @200 (@7.9") VIF
	2x1-KE19162 @200 (@7.9") VOF	2x1-KE19163 @200 (@7.9") VIF
	2x1-KE19164 @200 (@7.9") VOF	2x1-KE19165 @200 (@7.9") VIF
	2x1-KE19166 @200 (@7.9") VOF	2x1-KE19167 @200 (@7.9") VIF
	2x1-KE19168 @200 (@7.9") VOF	2x1-KE19169 @200 (@7.9") VIF
	2x1-KE19170 @200 (@7.9") VOF	2x1-KE19171 @200 (@7.9") VIF
	2x1-KE19172 @200 (@7.9") VOF	2x1-KE19173 @200 (@7.9") VIF
	2x1-KE19174 @200 (@7.9") VOF	2x1-KE19175 @200 (@7.9") VIF
"b"	2x1-KE19176 @200 (@7.9") VOF	2x1-KE19177 @200 (@7.9") VIF

STIRRUP CALL OUT-FUTURE BIKE PATH EX.

	VERT-OF	VERT-IF
"g"	2x1-KE16207 @300 (@11.8") VOF	2x1-KE16208 @300 (@11.8") VIF
	2x1-KE16209 @300 (@11.8") VOF	2x1-KE16210 @300 (@11.8") VIF
	2x1-KE16211 @300 (@11.8") VOF	2x1-KE16212 @300 (@11.8") VIF
"h"	2x1-KE16213 @300 (@11.8") VOF	2x1-KE16214 @300 (@11.8") VIF

4-KE16215 @300 (@11.8") CAP

HINGE KE END DIA. STIRRUP-ELEVATION

STIRRUP CALL OUT-CENTER-BELOW PIPE HINGE

	VERT-OF(N)	VERT-IF(N)
"c"	2x2-KE16178 @200 (@7.9") VOF	2x3-KE16179 @200 (@7.9") VIF
	2x2-KE16180 @200 (@7.9") VOF	2x3-KE16181 @200 (@7.9") VIF
	2x2-KE16182 @200 (@7.9") VOF	2x3-KE16183 @200 (@7.9") VIF
	2x2-KE16184 @200 (@7.9") VOF	2x3-KE16185 @200 (@7.9") VIF
	2x2-KE16186 @200 (@7.9") VOF	2x3-KE16187 @200 (@7.9") VIF
"d"	2x2-KE16188 @200 (@7.9") VOF	2x3-KE16189 @200 (@7.9") VIF
	VERT-OF(S)	**VERT-IF(S)**
"e"	2x2-KE16190 @200 (@7.9") VOF	2x3-KE16191 @200 (@7.9") VIF
	2x2-KE16192 @200 (@7.9") VOF	2x3-KE16193 @200 (@7.9") VIF
	2x2-KE16194 @200 (@7.9") VOF	2x3-KE16195 @200 (@7.9") VIF
	2x2-KE16196 @200 (@7.9") VOF	2x3-KE16197 @200 (@7.9") VIF
	2x2-KE16198 @200 (@7.9") VOF	2x3-KE16199 @200 (@7.9") VIF
"f"	2x2-KE16200 @200 (@7.9") VOF	2x3-KE16201 @200 (@7.9") VIF

STIRRUP CALL OUT-CENTER-ABOVE PIPE HINGE

VERT-EF(N)
2x5-KE16202 @200 (@7.9") VRT
2x5-KE16203 @200 (@7.9") VRT
VERT-EF(S)
2x5-KE16202 @200 (@7.9") VRT
2x5-KE16203 @200 (@7.9") VRT

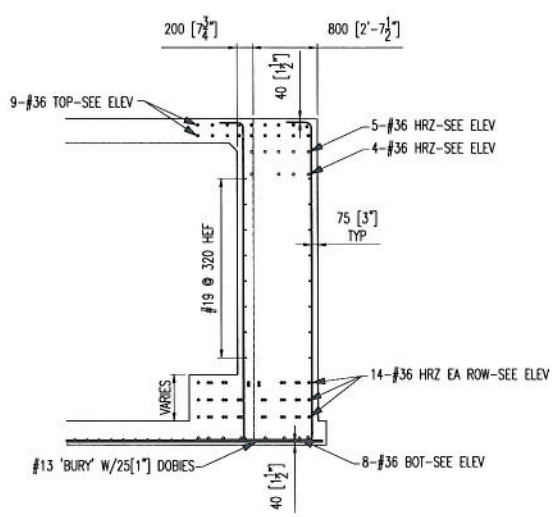

END DIAPHRAGM-SECTION @ SLOPE

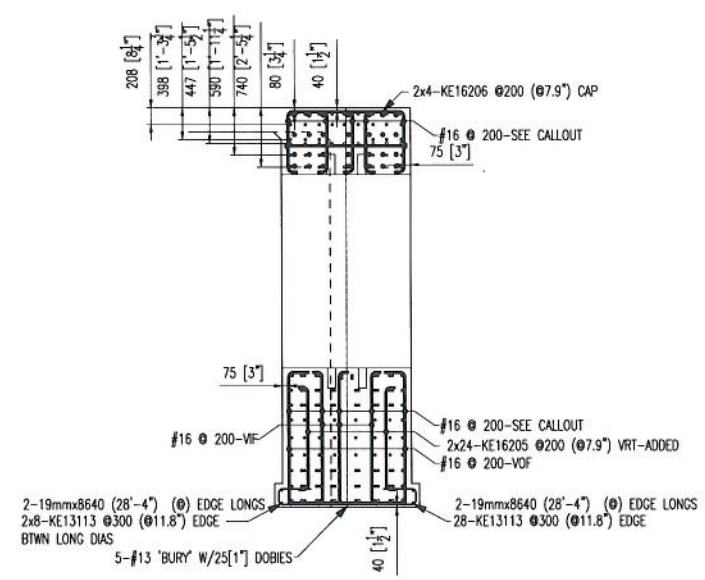

END DIAPHRAGM-SECTION BTWN RIDGE LINES

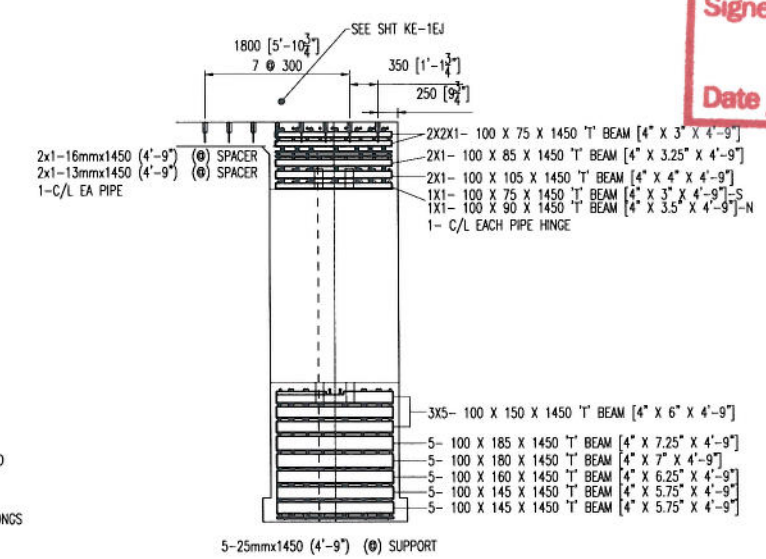

END DIAPHRAGM-SECTION #36 BAR SUPPORT

PLACER NOTE:

INSTALL US END DIAPHRAGM FACE - COMPLETE

SEE SECTION-
#36 SUPPORT DETAIL

Contractor: AM.BRIDGE/FLUOR-JV
Customer: CAL TRANS
Refer to Run No: KE-ED
Date 05/31/2012 | Drawn RJC | Chkd. | Contract No. 13114174 | Dwg. No. KE-6

Project: YBI TRANSITION STRUCTURES
EASTBOUND BRIDGE
Detail: HINGE KE CLOSURE
END DIA STIRRUP-ELEV/SECT.

☒ APPROVED
☐ APPROVED AS NOTED
☐ NOT APPROVED
Pursuant to Section 5-1.02 of the Standard Specifications
State of California
DEPARTMENT OF TRANSPORTATION
Division of Structures
Office of Structure Construction
Signed
Structure Representative
Date 7/3/12

Harris & Sutter Ridar INC.
355 SOUTH VASCO ROAD, LIVERMORE, CALIFORNIA 94550
TEL: (925) 373-0733 FAX: (925) 373-0132

No.	Description	Date	By
	FOR REVIEW	06/08/2012	RJC
	REV PER REVIEW	06/28/2012	RJC
	FOR PLACING	XX/XX/2012	RJC

The full intent and purpose of this drawing is the placing of reinforcing steel bars ONLY. It is NOT the intent to be a means of interpretation of the relationship between the assembled, finished, commodes or other Sub-trades.

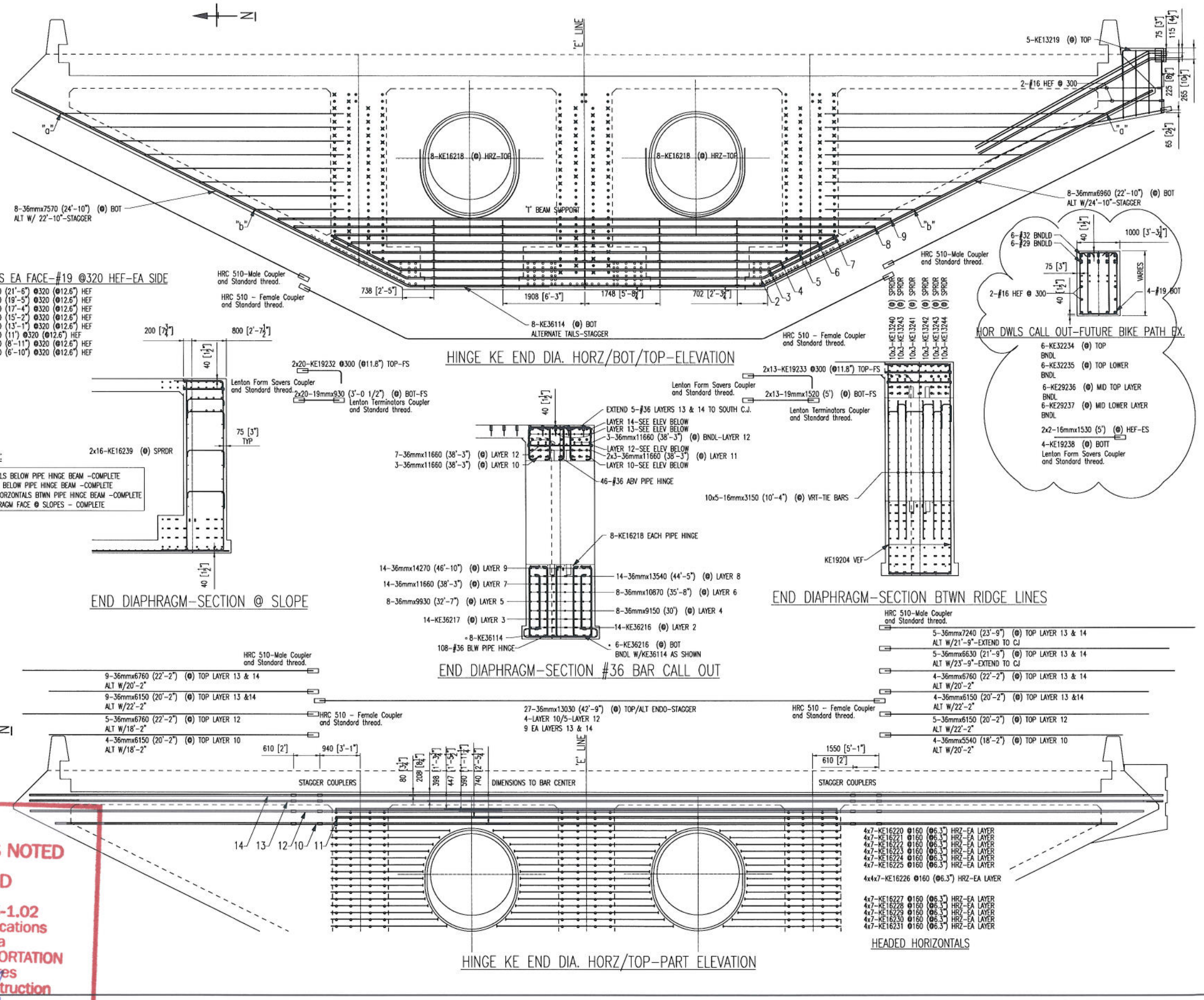

☒ APPROVED
☐ APPROVED AS NOTED
☐ NOT APPROVED

Pursuant to Section 5-1.02
of the Standard Specifications
State of California
DEPARTMENT OF TRANSPORTATION
Division of Structures
Office of Structure Construction

Signed Carlos Moreno
Structure Representative
Date 7/3/12

Contractor: AM.BRIDGE/FLUOR-JV
Customer: CAL TRANS
Refer to Run No: KE-EDH

Date	Drawn	Chkd.	Contract No.	Dwg. No.
05/31/2012	RJC		13114174	KE-7

Project: YBI TRANSITION STRUCTURES
EASTBOUND BRIDGE

Drawing: HINGE KE CLOSURE
END DIA HORZ-ELEV/SECT.

Harris & Bobar INC.
355 SOUTH VASCO ROAD, LIVERMORE, CALIFORNIA 94550
TEL: (925) 373-0733 FAX: (925) 373-0156

No.	Description	Date	By
	FOR REVIEW	06/08/2012	RJC
	REV PER REVIEW	06/28/2012	RJC
	FOR PLACING	XX/XX/2012	RJC

This full sheet and any copies of this drawing is the property of Harris & Bobar. Use ONLY in the placing of reinforcing steel. Not to be used as a means of communication between the Architect, Engineer, Contractor or any other Sub-trades.

PLACER NOTE:

SEQUENCE #36/#57 HORZONTALS ABOVE PIPE HINGE BEAM -COMPLETE
INSTALL #16 VERTICALS ABOVE PIPE HINGE BEAM -COMPLETE
INSTALL #16 HEADED CROSS TIES AROUND PIPE HINGE BEAM -COMPLETE

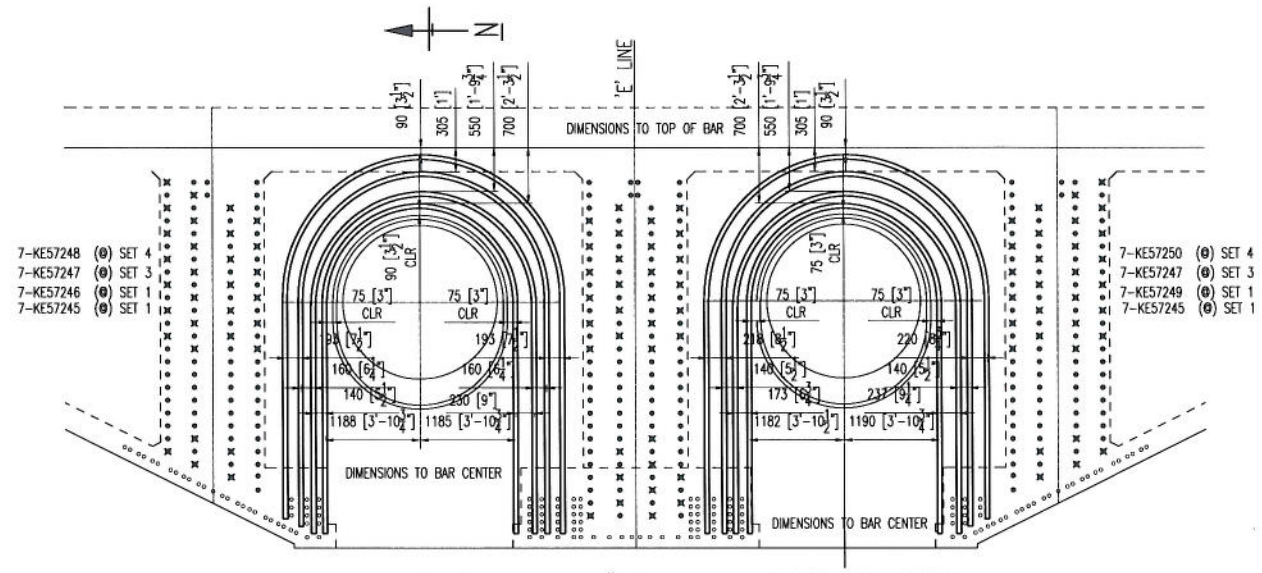

HINGE KE END DIA. #57 CALLOUT-PART ELEVATION

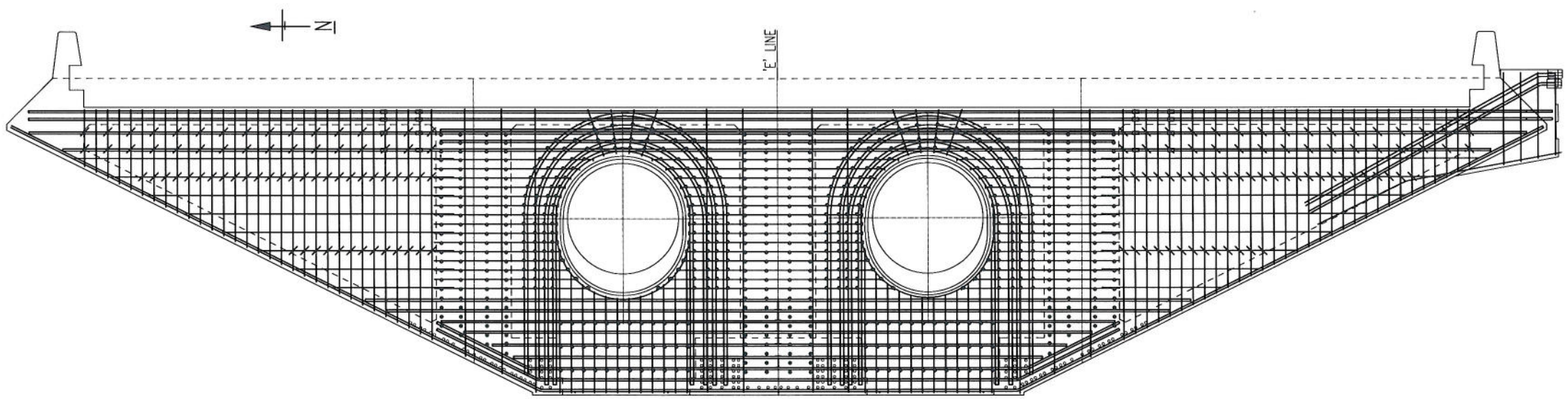

HINGE KE END DIA. CROSS TIES-ELEVATION

☒ APPROVED
☐ APPROVED AS NOTED
☐ NOT APPROVED

Pursuant to Section 5-1.02
of the Standard Specifications
State of California
DEPARTMENT OF TRANSPORTATION
Division of Structures
Office of Structure Construction

Signed _____
Structure Representative

Date 7/3/12

END DIAPHRAGM #18 HOOPS BAR LIST

Bar Mark	Qty	Size	Total length	Type	'A'	'B'	'C'	'D'	'E'	'F'	'G'	'H'	'J'	'K'	'O'	'R'
KE57245	14	57mm	314' 6½"	10	9'5"	12'6 ½"	9'5"								7'11 ¾"	3'11 ¾"
KE57246	7	57mm	339' 8 ¾"	10	9'3 ¾"	14'5 ¾"	9'3 ¾"								9'2 ¾"	4'7"
KE57247	14	57mm	35'	10	9'7 ¾"	16'1"	9'3 ¾"								10'2 ¾"	5'1 ½"
KE57248	7	57mm	36'9 ¾"	10	9'8 ¾"	18'1"	9'0 ¾"								11'5 ¾"	5'9"
KE57249	7	57mm	33'1 ¾"	10	9'3"	14'7 ½"	9'3"								9'3 ¾"	4'8"
KE57250	7	57mm	36'10 ½"	10	9'7"	18'3 ¾"	8'11 ¾"								11'7 ¾"	5'9 ¾"

ALL DIMENSIONS ARE OUT TO OUT
ALL STEEL A706 Grade 60

FOR TYPICAL BAR BENDS REFER TO
CRSI MANUAL OF STANDARD PRACTICE

KE-HH 25956.36lbs

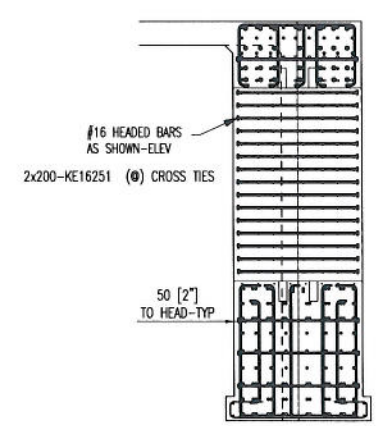

CROSS TIES-SECTION BTWN RIDGE LINES

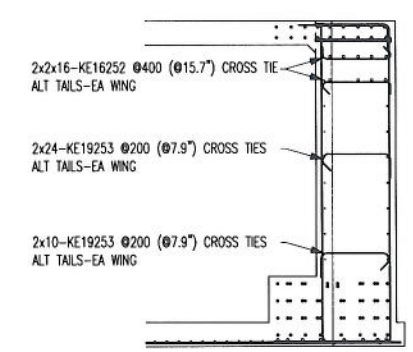

CROSS TIES-SECTION @ SLOPE

Contractor: AM.BRIDGE/FLUOR-JV
Customer: CAL TRANS
Refer to Run No: KE-EHH
Date 05/31/2012 | Drawn RJC | Chkd. | Contract No. 13114174 | Dwg. No. KE-8

Project: YBI TRANSITION STRUCTURES
EASTBOUND BRIDGE
Drawing: HINGE KE CLOSURE
END DIA CROSS TIES/#57 ADDED

Harris & Sahas Rebar INC.
355 SOUTH VASCO ROAD, LIVERMORE, CALIFORNIA 94550
TEL. (925) 373-0733 FAX: (925) 373-0136

No.	Description	Date	By
	FOR REVIEW	06/08/2012	RJC
	REV PER REVIEW	06/28/2012	RJC
	FOR PLACING	XX/XX/2012	RJC

The original intent and purpose of this drawing is the accuracy of reinforcing steel bars ONLY. It is NOT to be used as a means of determining the relationship between the architect, engineer, contractor or any other sub-trades.

END DIAPHRAGM VERTICALS BAR LIST–PART

Bar Mark	Qty	Size	Total length	Type	'A'	'B'	'C'	'D'	'E'	'F'	'G'	'H'	'J'	'K'	'O'	'R'
	4	19mm	28'4 ¼"			28'4 ¼"										
	2	16mm	4'9"			4'9"										
	2	13mm	4'9"			4'9"										
	5	25mm	4'9"			4'9"										
KE13113	44	13mm	2'5 ¾"	17		1'3 ¾"	7 ½"	6"								
KE16178	4	16mm	9'9 ¾"	2	9 ¾"	8'2"					9 ¾"					
KE16179	6	16mm	8'11 ½"	17		4 ¾"	8'2"	4 ¾"								
KE16180	4	16mm	8'5 ½"	2	9 ¾"	6'10"					9 ¾"					
KE16181	6	16mm	7'7 ¾"	17		4 ¾"	6'10"	4 ¾"								
KE16182	4	16mm	7'9 ¾"	2	9 ¾"	6'2"					9 ¾"					
KE16183	6	16mm	6'11 ½"	17		4 ¾"	6'2"	4 ¾"								
KE16184	4	16mm	7'5"	2	9 ¾"	5'9 ¾"					9 ¾"					
KE16185	6	16mm	6'6 ¾"	17		4 ¾"	5'9 ¾"	4 ¾"								
KE16186	4	16mm	7'1 ¾"	2	9 ¾"	5'6 ¾"					9 ¾"					
KE16187	6	16mm	6'3 ½"	17		4 ¾"	5'6 ¾"	4 ¾"								
KE16188	4	16mm	7'0 ¾"	2	9 ¾"	5'4 ½"					9 ¾"					
KE16189	6	16mm	6'7"	17		4 ¾"	5'4 ½"	4 ¾"								
KE16190	4	16mm	9'10 ½"	2	9 ¾"	8'2 ¾"					9 ¾"					
KE16191	6	16mm	9'0 ¾"	17		4 ¾"	8'2 ¾"	4 ¾"								
KE16192	4	16mm	8'6 ¾"	2	9 ¾"	6'10 ¾"					9 ¾"					
KE16193	6	16mm	7'8 ¾"	17		4 ¾"	6'10 ¾"	4 ¾"								
KE16194	4	16mm	7'10"	2	9 ¾"	6'2 ½"					9 ¾"					
KE16195	6	16mm	6'11 ¾"	17		4 ¾"	6'2 ½"	4 ¾"								
KE16196	4	16mm	7'5 ¾"	2	9 ¾"	5'9 ¾"					9 ¾"					
KE16197	6	16mm	6'7 ½"	17		4 ¾"	5'9 ¾"	4 ¾"								
KE16198	4	16mm	7'2 ¾"	2	9 ¾"	5'6 ½"					9 ¾"					
KE16199	6	16mm	6'4"	17		4 ¾"	5'6 ½"	4 ¾"								
KE16200	4	16mm	7'1"	2	9 ¾"	5'5 ¾"					9 ¾"					
KE16201	6	16mm	6'2 ¾"	17		4 ¾"	5'5 ¾"	4 ¾"								
KE16202	20	16mm	3'7"	17		4 ¾"	2'9 ½"	4 ¾"								
KE16203	20	16mm	3'3 ¾"	17		4 ¾"	2'6 ¾"	4 ¾"								
KE16205	48	16mm	5'0 ¾"	17		4 ¾"	4'2 ¾"	4 ¾"								
KE16206	8	16mm	6'4 ¾"	2	9 ¾"	4'9"					9 ¾"					
KE16207	2	16mm	8'6"	S2	5 ½"	5'3"	2'9 ½"					3 ½"				
KE16208	2	16mm	7'2 ¾"	S2	5 ½"	5'3"	1'5 ¾"					3 ½"				
KE16209	2	16mm	8'3 ½"	S2	5 ½"	5'0 ¾"	2'9 ½"					3 ½"				
KE16210	2	16mm	6'11 ¾"	S2	5 ½"	5'0 ¾"	1'5 ¾"					3 ½"				
KE16211	2	16mm	8'1 ¾"	S2	5 ½"	4'10 ¾"	2'9 ½"					3 ½"				
KE16212	2	16mm	6'10"	S2	5 ½"	4'10 ¾"	1'5 ¾"					3 ½"				
KE16213	2	16mm	7'11 ¾"	S2	5 ½"	4'8 ¾"	2'9 ½"					3 ½"				
KE16214	2	16mm	6'7 ½"	S2	5 ½"	4'8 ¾"	1'5 ¾"					3 ½"				
KE16215	4	16mm	4'5 ¾"	2	9 ¾"	2'9 ½"					9 ¾"					
KE19116	2	19mm	16'10 ¾"	17		11 ¾"	13'1"	2'9 ½"								
KE19117	2	19mm	16'10 ¾"	20		11 ¾"	13'1"	2'9 ½"								
KE19118	2	19mm	16'6 ¾"	17		11 ¾"	12'9 ¾"	2'9 ½"								
KE19119	2	19mm	16'6 ½"	20		11 ¾"	12'9 ¾"	2'9 ½"								
KE19120	2	19mm	16'3"	17		11 ¾"	12'5 ¾"	2'9 ½"								
KE19121	2	19mm	16'2 ½"	20		11 ¾"	12'5 ¾"	2'9 ½"								
KE19122	2	19mm	15'11"	17		11 ¾"	12'1 ¾"	2'9 ½"								
KE19123	2	19mm	15'10 ½"	20		11 ¾"	12'1 ¾"	2'9 ½"								
KE19124	2	19mm	15'7"	17		11 ¾"	11'9 ¾"	2'9 ½"								
KE19125	2	19mm	15'6 ½"	20		11 ¾"	11'9 ¾"	2'9 ½"								
KE19126	2	19mm	15'3"	17		11 ¾"	11'5 ½"	2'9 ½"								
KE19127	2	19mm	15'2 ¾"	20		11 ¾"	11'5 ½"	2'9 ½"								
KE19128	2	19mm	14'11 ¾"	17		11 ¾"	11'1 ½"	2'9 ½"								
KE19129	2	19mm	14'10 ¾"	20		11 ¾"	11'1 ½"	2'9 ½"								
KE19130	2	19mm	14'7 ¾"	17		11 ¾"	10'9 ½"	2'9 ½"								
KE19131	2	19mm	14'6 ¾"	20		11 ¾"	10'9 ½"	2'9 ½"								
KE19132	2	19mm	14'3 ¾"	17		11 ¾"	10'5 ½"	2'9 ½"								
KE19133	2	19mm	14'2 ¾"	20		11 ¾"	10'5 ½"	2'9 ½"								
KE19134	2	19mm	13'11 ¾"	17		11 ¾"	10'1 ¾"	2'9 ½"								
KE19135	2	19mm	13'11"	20		11 ¾"	10'1 ¾"	2'9 ½"								
KE19136	2	19mm	13'7 ½"	17		11 ¾"	9'9 ¾"	2'9 ½"								
KE19137	2	19mm	13'7"	20		11 ¾"	9'9 ¾"	2'9 ½"								
KE19138	2	19mm	13'3 ½"	17		11 ¾"	9'5 ¾"	2'9 ½"								
KE19139	2	19mm	13'3"	20		11 ¾"	9'5 ¾"	2'9 ½"								
KE19140	2	19mm	12'11 ½"	17		11 ¾"	9'1 ¾"	2'9 ½"								
KE19141	2	19mm	12'11"	20		11 ¾"	9'1 ¾"	2'9 ½"								
KE19142	2	19mm	12'7 ½"	17		11 ¾"	8'10"	2'9 ½"								
KE19143	2	19mm	12'7 ¾"	20		11 ¾"	8'10"	2'9 ½"								
KE19144	2	19mm	12'3 ¾"	17		11 ¾"	8'6"	2'9 ½"								
KE19145	2	19mm	12'3 ¾"	20		11 ¾"	8'6"	2'9 ½"								
KE19146	2	19mm	11'11 ¾"	17		11 ¾"	8'2"	2'9 ½"								
KE19147	2	19mm	11'11 ¾"	20		11 ¾"	8'2"	2'9 ½"								
KE19148	2	19mm	11'7 ¾"	17		11 ¾"	7'10"	2'9 ½"								
KE19149	2	19mm	11'7 ¾"	20		11 ¾"	7'10"	2'9 ½"								
KE19150	2	19mm	11'3 ¾"	17		11 ¾"	7'6 ¾"	2'9 ½"								
KE19151	2	19mm	11'3 ½"	20		11 ¾"	7'6 ¾"	2'9 ½"								
KE19152	2	19mm	11'	17		11 ¾"	7'2 ¾"	2'9 ½"								

END DIAPHRAGM VERTICALS BAR LIST–CONT'D

Bar Mark	Qty	Size	Total length	Type	'A'	'B'	'C'	'D'	'E'	'F'	'G'	'H'	'J'	'K'	'O'	'R'
KE19153	2	19mm	10'11 ½"	20		11 ¾"	7'2 ¾"	2'9 ½"								
KE19154	2	19mm	10'8"	17		11 ¾"	6'10 ¾"	2'9 ½"								
KE19155	2	19mm	10'7 ½"	20		11 ¾"	6'10 ¾"	2'9 ½"								
KE19156	2	19mm	10'4"	17		11 ¾"	6'6 ¾"	2'9 ½"								
KE19157	2	19mm	10'3 ½"	20		11 ¾"	6'6 ¾"	2'9 ½"								
KE19158	2	19mm	10'	17		11 ¾"	6'2 ½"	2'9 ½"								
KE19159	2	19mm	9'11 ¾"	20		11 ¾"	6'2 ½"	2'9 ½"								
KE19160	2	19mm	9'8 ¼"	17		11 ¾"	5'10 ½"	2'9 ½"								
KE19161	2	19mm	9'7 ¾"	20		11 ¾"	5'10 ½"	2'9 ½"								
KE19162	2	19mm	9'4 ¼"	17		11 ¾"	5'6 ½"	2'9 ½"								
KE19163	2	19mm	9'3 ¾"	20		11 ¾"	5'6 ½"	2'9 ½"								
KE19164	2	19mm	8'11 ¼"	17		11 ¾"	5'2 ½"	2'9 ½"								
KE19165	2	19mm	8'11 ¾"	20		11 ¾"	5'2 ½"	2'9 ½"								
KE19166	2	19mm	8'8"	17		11 ¾"	4'10 ¾"	2'9 ½"								
KE19167	2	19mm	8'8"	20		11 ¾"	4'10 ¾"	2'9 ½"								
KE19168	2	19mm	8'4"	17		11 ¾"	4'6 ¾"	2'9 ½"								
KE19169	2	19mm	8'4"	20		11 ¾"	4'6 ¾"	2'9 ½"								
KE19170	2	19mm	8'	17		11 ¾"	4'2 ¾"	2'9 ½"								
KE19171	2	19mm	8'	20		11 ¾"	4'2 ¾"	2'9 ½"								
KE19172	2	19mm	7'8 ¼"	17		11 ¾"	3'10 ¾"	2'9 ½"								
KE19173	2	19mm	7'8 ¼"	20		11 ¾"	3'10 ¾"	2'9 ½"								
KE19174	2	19mm	7'4 ¼"	17		11 ¾"	3'7"	2'9 ½"								
KE19175	2	19mm	7'4 ¼"	20		11 ¾"	3'7"	2'9 ½"								
KE19176	2	19mm	7'0 ¼"	17		11 ¾"	3'3"	2'9 ½"								
KE19177	2	19mm	7'0 ¼"	20		11 ¾"	3'3"	2'9 ½"								
KE19204	20	19mm	18'11 ¾"	17		16'1 ¾"	2'9 ½"									

ALL DIMENSIONS ARE OUT TO OUT
ALL STEEL A706 Grade 60

FOR TYPICAL BAR BENDS REFER TO
CRSI MANUAL OF STANDARD PRACTICE

KE-EDS	4642.76lbs

END DIAPHRAGM HORIZONTALS BAR LIST

Bar Mark	Qty	Size	Total length	Type	'A'	'B'	'C'	'D'	'E'	'F'	'G'	'H'	'J'	'K'	'O'	'R'
	8	36mm	24'10"			24'10"										
	8	36mm	22'10"			22'10"										
	8	36mm	30'0 ¼"			30'0 ¼"										
	8	36mm	32'7"			32'7"										
	8	36mm	35'8"			35'8"										
	33	36mm	38'3"			38'3"										
	14	36mm	44'5"			44'5"										
	14	36mm	46'9 ¾"			46'9 ¾"										
	27	36mm	42'9"			42'9"										
	22	36mm	20'2 ¾"			20'2 ¾"										
	4	36mm	18'2"			18'2"										
	18	36mm	22'2 ¾"			22'2 ¾"										
	5	36mm	23'9"			23'9"										
	5	36mm	21'9"			21'9"										
	4	19mm	21'5 ¾"			21'5 ¾"										
	4	19mm	19'5"			19'5"										
	4	19mm	17'3 ¾"			17'3 ¾"										
	4	19mm	15'2"			15'2"										
	4	19mm	13'1"			13'1"										
	4	19mm	11'			11'										
	4	19mm	8'11"			8'11"										
	4	19mm	6'10"			6'10"										
	40	19mm	3'0 ½"			3'0 ½"										
	26	19mm	4'11 ¾"			4'11 ¾"										
	50	16mm	10'4"			10'4"										
	4	16mm	5'0 ¼"			5'0 ¼"										
KE13219	5	13mm	5'5"	17		2'3 ½"	3'1 ½"									
KE13240	30	13mm	2'6 ¾"	17		1'3 ¾"	8 ¾"	6"								
KE13241	30	13mm	3'1 ½"	17		1'3 ¾"	1'3 ¾"	6"								
KE13242	30	13mm	2'7"	17		1'3 ¾"	9 ½"	6"								
KE13243	60	13mm	2'4 ¾"	17		1'3 ¾"	7"	6"								
KE13244	30	13mm	2'6"	17		1'3 ¾"	8 ¼"	6"								
KE16218	16	16mm	14'10 ¾"	10	1'5 ¾"	11'11 ¾"	1'5 ¾"								7'7 ¾"	3'9 ¾"
KE16220	28	16mm	9'4 ¼"	H40		9'4 ¼"									9'2 ¾"	
KE16221	28	16mm	8'7 ¾"	H40		8'7 ¾"									8'5 ¾"	
KE16222	28	16mm	8'1 ¼"	H40		8'1 ¼"									7'11 ¾"	
KE16223	28	16mm	7'9"	H40		7'9"									7'7"	
KE16224	28	16mm	7'6 ¾"	H40		7'6 ¾"									7'4 ¾"	
KE16225	28	16mm	7'4 ½"	H40		7'4 ½"									7'2 ½"	
KE16226	112	16mm	7'4 ¼"	H40		7'4 ¼"									7'2 ¾"	
KE16227	28	16mm	7'5 ¾"	H40		7'5 ¾"									7'3 ¾"	
KE16228	28	16mm	7'8 ¾"	H40		7'8 ¾"									7'6 ¾"	
KE16229	28	16mm	8'	H40		8'									7'10"	
KE16230	28	16mm	8'5 ¾"	H40		8'5 ¾"									8'3 ¾"	
KE16231	28	16mm	9'1 ½"	H40		9'1 ½"									8'11 ½"	
KE16239	32	16mm	4'7"	17		1'3 ¾"	2'9 ½"	6"								

Bar Mark	Qty	Size	Total length	Type	'A'	'B'	'C'	'D'	'E'	'F'	'G'	'H'	'J'	'K'	'O'	'R'
KE16251	400	16mm	5'3"	H41		5'3"									4'11"	
KE16252	64	16mm	3'9"	T9	5 ½"	2'9 ½"					6"					
KE19232	40	19mm	4'	2	1'0 ¾"	2'11 ¾"										
KE19233	26	19mm	5'11 ¾"	2	1'0 ¾"	4'11"										
KE19238	4	19mm	14'8"	3		9'0 ¾"	5'7 ¾"					1'7"		5'4 ½"	14'4 ¾"	
KE19253	68	19mm	4'5 ¾"	T9	7 ¾"	2'9 ½"					11 ¾"					
KE29236	6	29mm	15'11 ¾"	3		15'1 ½"	9 ¾"					6"		8 ¾"	15'9 ¾"	
KE29237	6	29mm	15'10 ¾"	3		15'0 ¾"	9 ½"					5 ½"		7 ¾"	15'8 ½"	
KE32234	6	32mm	16'2"	3		15'2 ¾"	11 ½"					6 ¾"		9"	16'0 ¾"	
KE32235	6	32mm	16'1 ¾"	3		15'2 ¾"	10 ¾"					6 ¾"		8 ¾"	15'11 ¾"	
KE36114	8	36mm	46'9"	22			8'9"	27'2 ¾"	10'9 ¾"			4'0 ½"		4'11"	44'8 ¾"	
KE36216	20	36mm	40'2"	3			6'5 ½"	27'2 ¾"	6'5 ½"			2'10 ¾"		5'10"	38'10 ½"	
KE36217	14	36mm	40'0 ¾"	3			5'10 ¾"	28'3"	5'10 ¾"			2'8"		5'3 ¾"	38'10 ½"	

ALL DIMENSIONS ARE OUT TO OUT
ALL STEEL A706 Grade 60

FOR TYPICAL BAR BENDS REFER TO
CRSI MANUAL OF STANDARD PRACTICE

KE-EDH	51891.70lbs

APPROVED
APPROVED AS NOTED
NOT APPROVED
Pursuant to Section 5-1.02
of the Standard Specifications
State of California
DEPARTMENT OF TRANSPORTATION
Division of Structures
Office of Structure Construction
Signed
Structure Representative
Date 7/3/12

No.	Description	Date	By
	FOR REVIEW	06/08/2012	RJC
	REVISED/RE-SUB	06/28/2012	RJC
	FOR PLACING	XX/XX/2012	RJC

The full intent and purpose of this drawing is the placing of reinforcing steel bars ONLY. It is NOT to be used as a means of communication between the Architect, Engineer, Contractor or any other Sub-trades.

Harris Salinas Rebar INC.
355 SOUTH VASCO ROAD, LIVERMORE, CALIFORNIA 94550
TEL. (925) 373-0733 FAX. (925) 373-0136

Project: YBI TRANSITION STRUCTURES
EASTBOUND BRIDGE
Drawing: HINGE KE CLOSURE
END DIAPHRAGM BAR LISTS

Contractor: AM.BRIDGE/FLUOR-JV
Customer: CAL TRANS
Refer to Run No: KE-ED

Date	Drawn	Chkd.	Contract No.	Dwg. No.
05/31/2012	RJC		13114174	KE-BL3

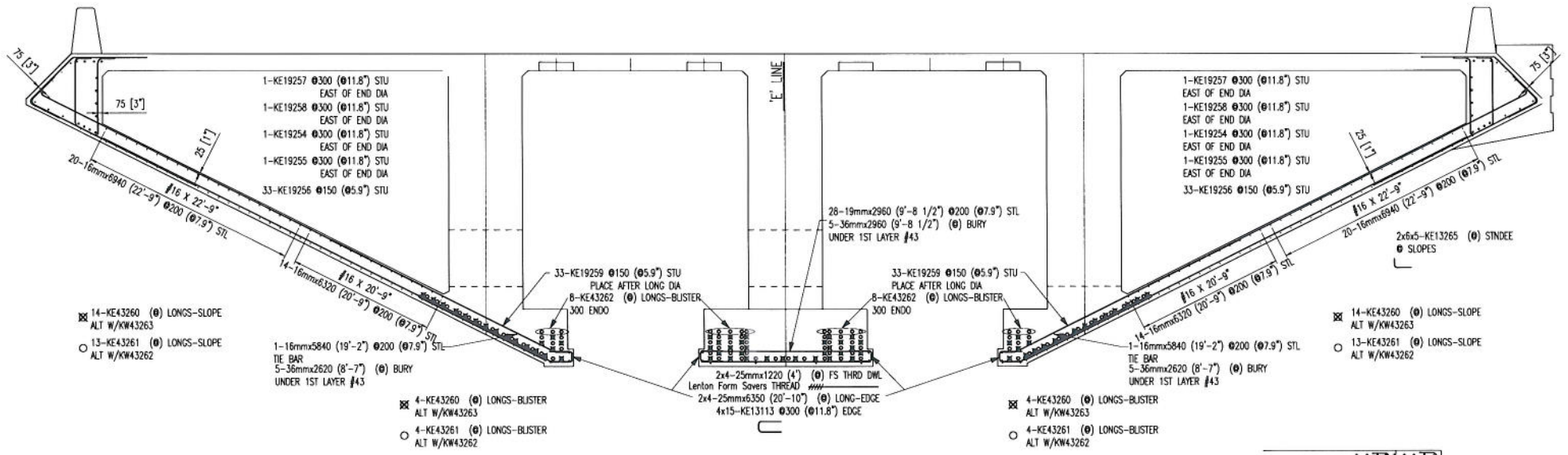

HINGE KE SOFFIT ELEV-TOP/#43 LONGS

- ⊠ 4-KE43260 (@) LONGS-BOT-CENTER ALT W/KW43263
- ○ 4-KE43261 (@) LONGS-BOT-CENTER ALT W/KW43263
- ⊠ 25-KE43263 (@) LONGS-CENTER BLISTER ALT W/KW43266
- ○ 25-KE43264 (@) LONGS-CENTER BLISTER ALT W/KW43265

PLACER NOTE:

INSTALL #36 'BURY' BARS AT OUTER LONG. DIA.-SLOPES
INSTALL #43 LONGITUDINAL BARS AT SLOPES
INSTALL SOFFIT TOP MAT-EDGE BEAM TO OUTER LONG.DIA.
INSTALL OUTER LONG. DIA. WALLS COMPLETE

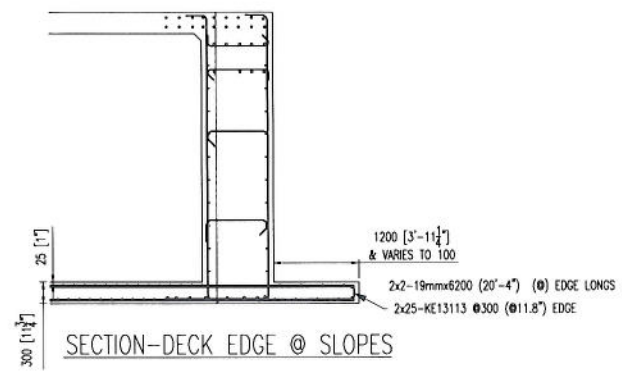

SECTION-DECK EDGE @ SLOPES

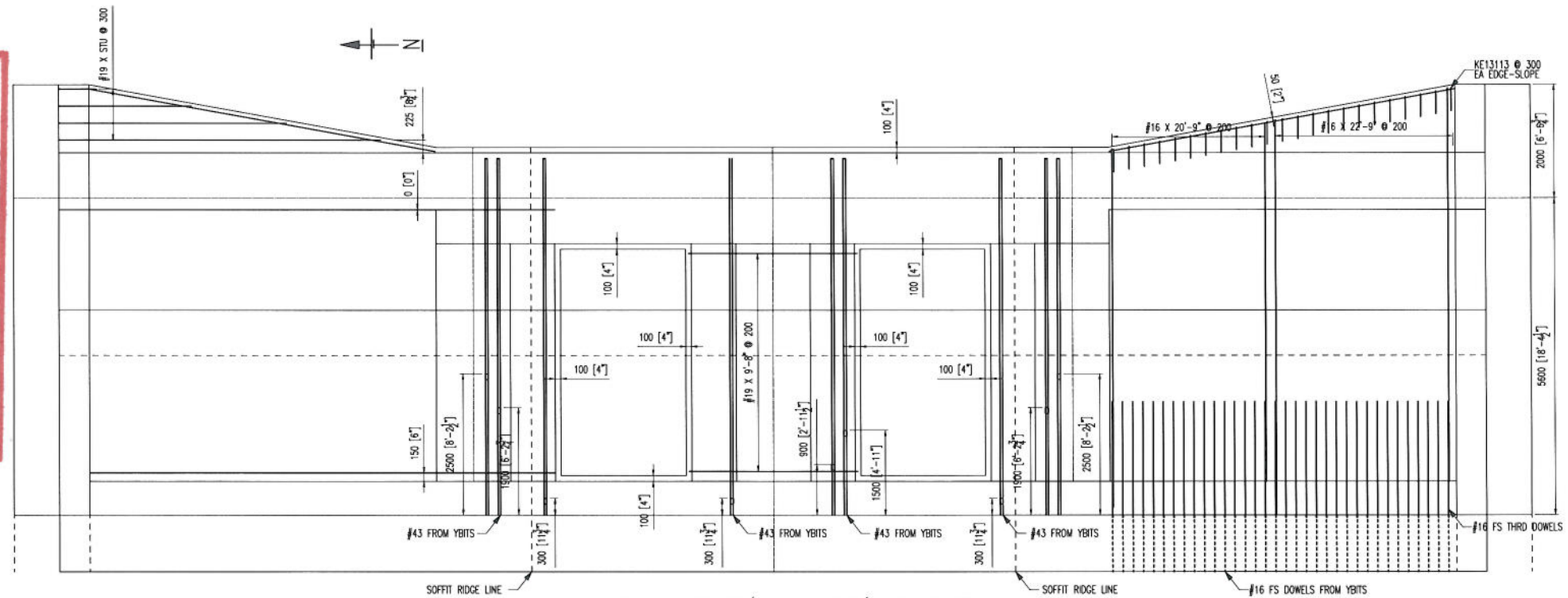

HINGE K CLOSURE/PLAN-SOFFIT/EDGE GIRDER

144-#43 DEXTRA BAR TEC THREADS

APPROVED
APPROVED AS NOTED
NOT APPROVED

Pursuant to Section 5-1.02
of the Standard Specifications
State of California
DEPARTMENT OF TRANSPORTATION
Division of Structures
Office of Structure Construction

Signed _____
Structure Representative

Date 7/3/12

Contractor: AM.BRIDGE/FLUOR-JV
Customer: CAL TRANS
Refer to Run No: KE-ST

Date	Drawn	Chkd.	Contract No.	Dwg. No.
05/31/2012	RJC		13114174	KE-9

Project: YBI TRANSITION STRUCTURES
EASTBOUND BRIDGE

Drawing: HINGE KE CLOSURE
SOFFIT TOP/#43-ELEV/PLAN

Harris Sarras Rebar INC.
355 SOUTH VASCO ROAD, LIVERMORE, CALIFORNIA 94550
TEL: (925) 373-0733 FAX: (925) 373-0136

No.	Description	Date	By
	FOR REVIEW	06/08/2012	RJC
	REV PER REVIEW	06/28/2012	RJC
	FOR PLACING	XX/XX/2012	RJC

This drawing is the property of this company, is loaned for information and is not to be used as a means of contract between the Architect, Engineer, Contractor or any other subcontractor.

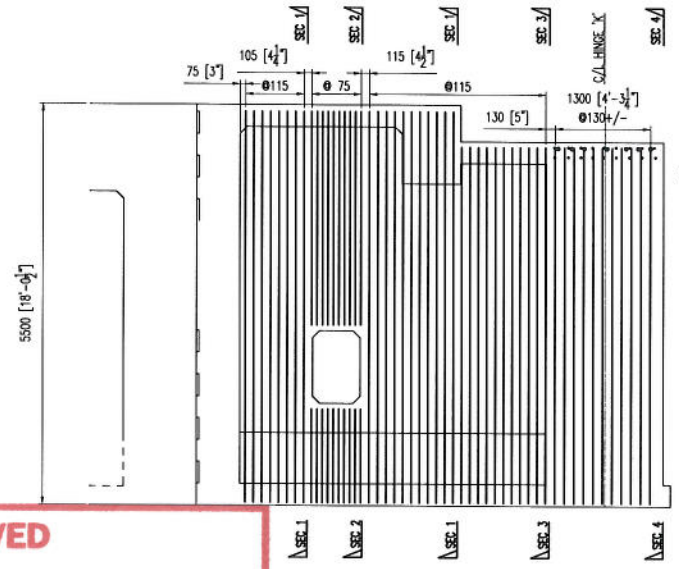

OUTER LONG. DIA.-STIRRUP ELEV
(NORTH DIAPHRAGM SHOWN-SOUTH DIA SIMILAR)

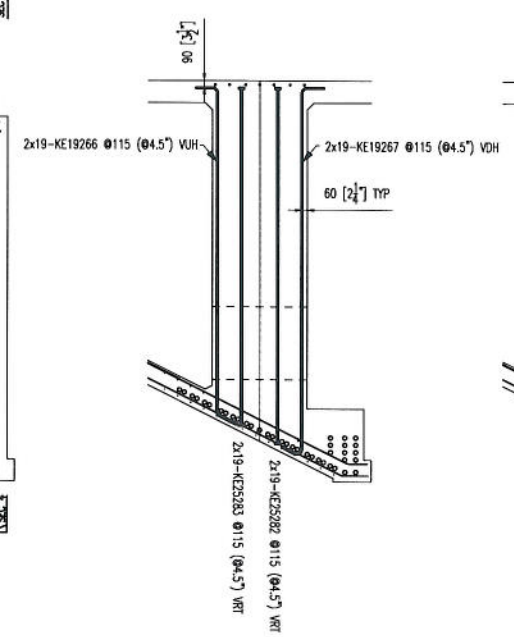

SECTION 1

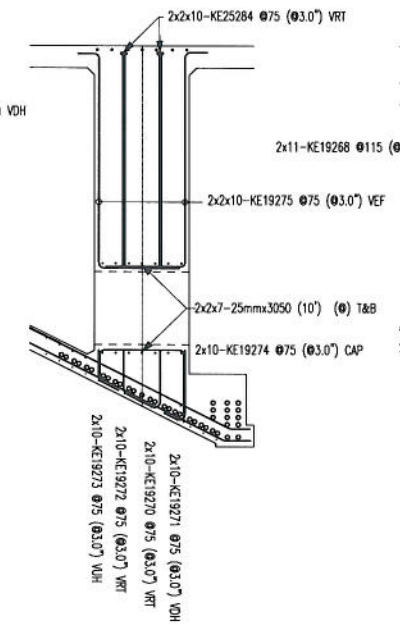

SECTION 2

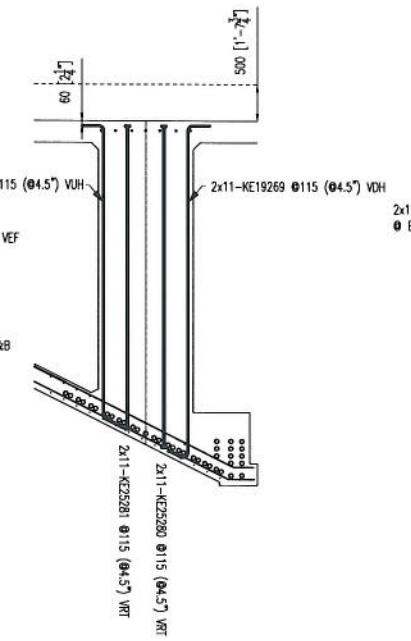

SECTION 3

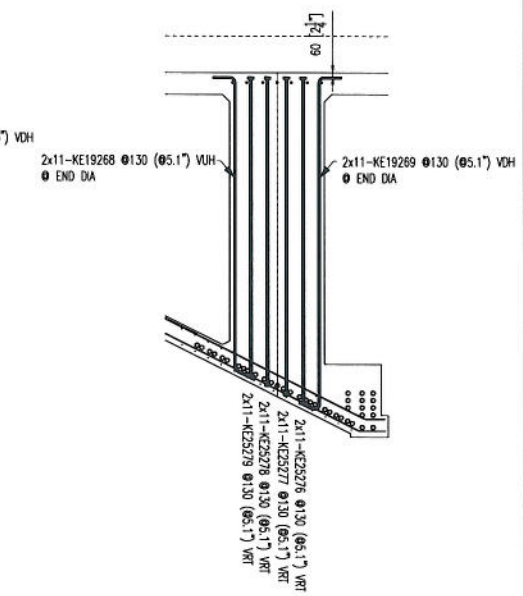

SECTION 4

ADJUST SPACING TO CLEAR #57/#36 BARS @ END DIA.
ADJUST #43 BARS TO CLEAR ANCHORS

APPROVED
APPROVED AS NOTED
NOT APPROVED

Pursuant to Section 5-1.02
of the Standard Specifications
State of California
DEPARTMENT OF TRANSPORTATION
Division of Structures
Office of Structure Construction

Signed _____
Structure Representative

Date 7/3/12

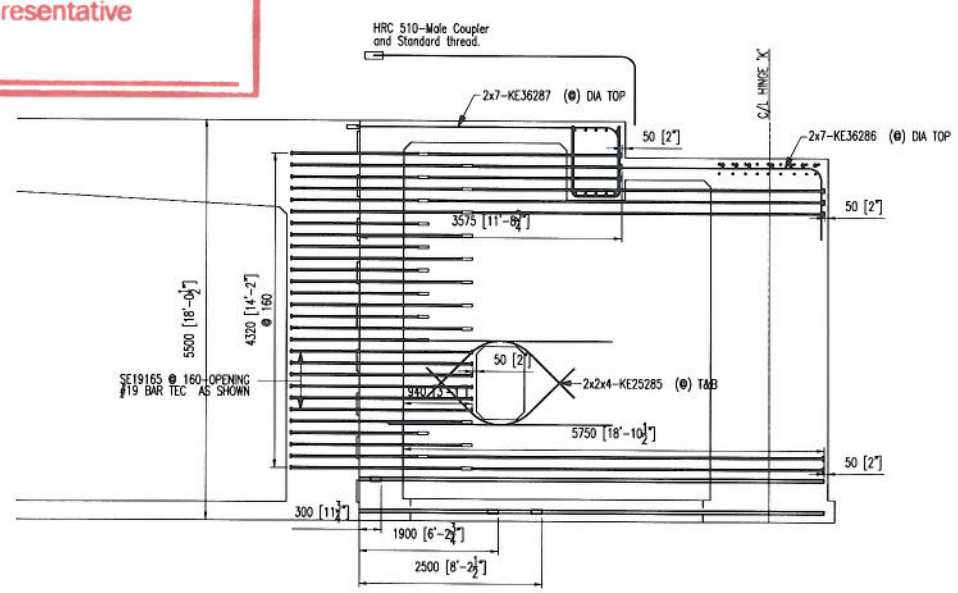

OUTER LONG. DIA.-HORIZONTAL ELEV
(NORTH DIAPHRAGM SHOWN-SOUTH DIA SIMILAR)

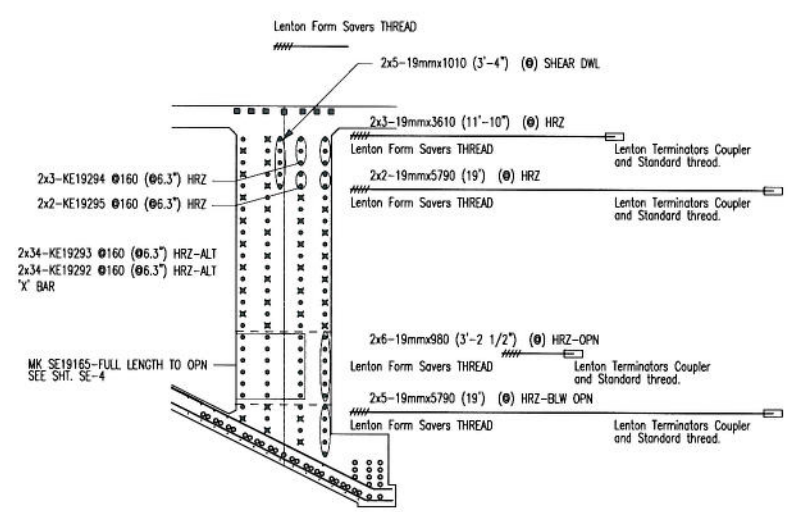

OUTER LONG. DIA.-HORZ-SECTION
(NORTH DIAPHRAGM SHOWN-SOUTH DIA SIMILAR)

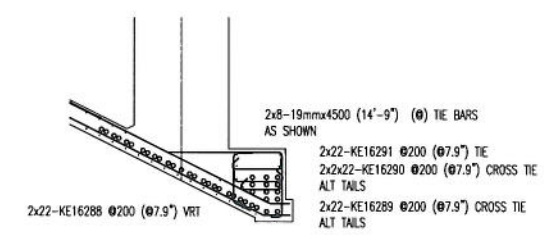

OUTER LONG. DIA.-BLISTER DETAIL
(NORTH DIAPHRAGM SHOWN-SOUTH DIA SIMILAR)

220-#19 DEXTRA BAR TEC HEADS
284-#25 DEXTRA BAR TEC HEADS
14-#36 HRC 510 MALE COUPLERS

PLACER NOTE:

INSTALL SOFFIT TOP MAT @ OUTER LONG.DIA.-COMPLETE
INSTALL #43/#25 LONGITUDINAL BARS AT OUTER LONG. DIA. BLISTERS
INSTALL OUTER LONG. DIA. BLISTERS-COMPLETE

Contractor: AM.BRIDGE/FLUOR-JV
Customer: CAL TRANS
Refer to Run No: KE-OD
Date 05/31/2012 | Drawn RJC | Chkd. | Contract No. 13114174 | Dwg. No. KE-10

Project: YBI TRANSITION STRUCTURES
EASTBOUND BRIDGE

Drawing: HINGE KE CLOSURE
OUTER DIA ELEV/SECTION

Harris & Sutras Rebar INC.
355 SOUTH VASCO ROAD, LIVERMORE, CALIFORNIA 94550
TEL: (925) 373-0733 FAX: (925) 373-0136

No.	Description	Date	By
	FOR REVIEW	06/08/2012	RJC
	REV PER REVIEW	06/28/2012	RJC
	FOR PLACING	XX/XX/2012	RJC

The cut, bent and purpose of this drawing is the placing of reinforcing steel bars ONLY. It is NOT to be used as a means of other Sub-trades. Contact the Architect, Engineer, Contractor any

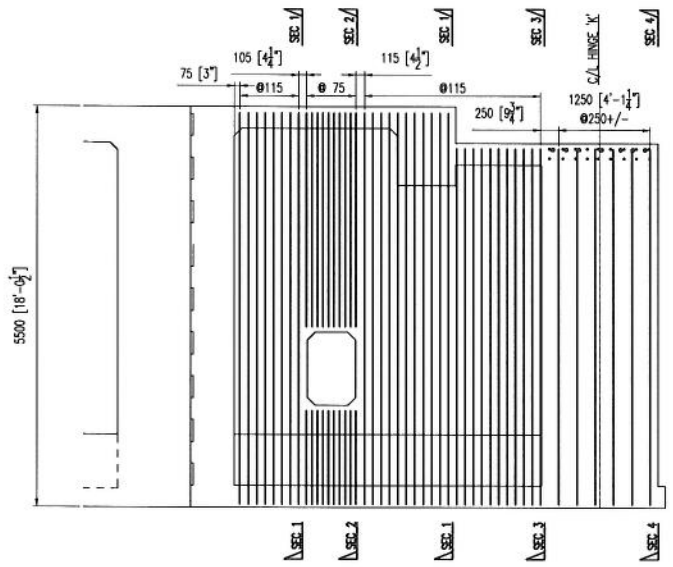

CENTER LONG. DIA.-STIRRUP ELEV
(LOOKING NORTH)

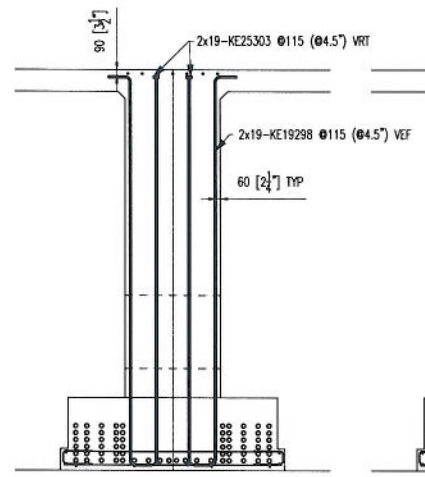

SECTION 1

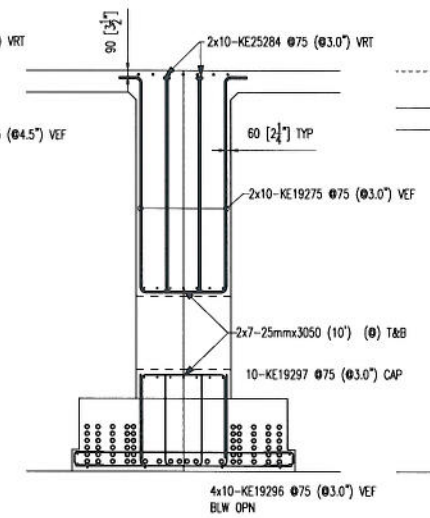

SECTION 2

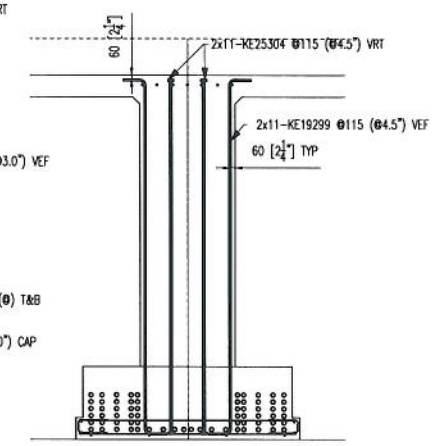

SECTION 3

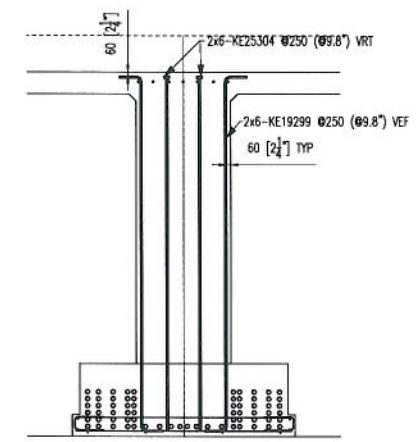

SECTION 4
ADJUST SPACING TO CLEAR #57/#36 BARS @ END DIA.

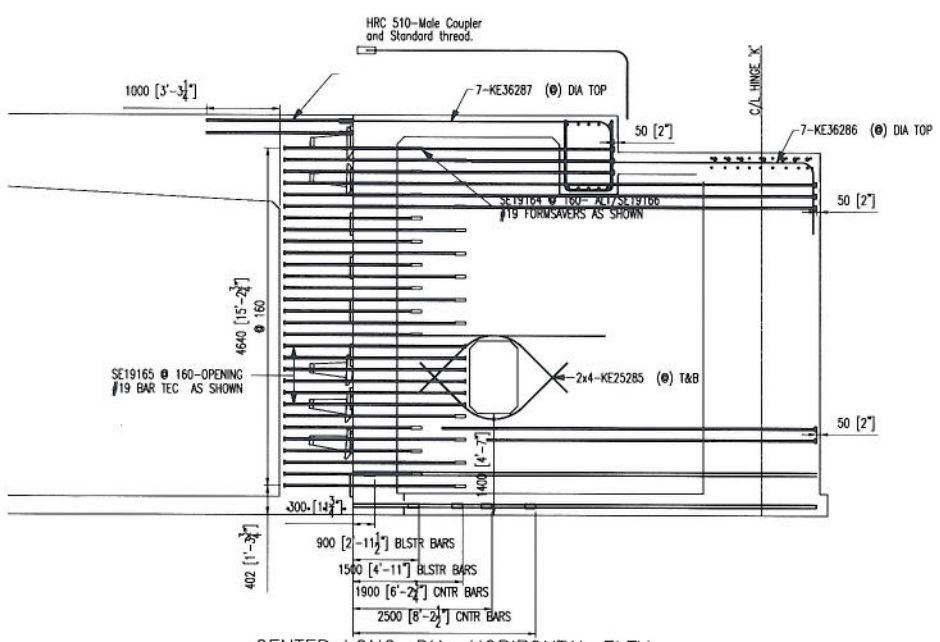

CENTER LONG. DIA.-HORIZONTAL ELEV
(LOOKING NORTH)

220-#19 DEXTRA BAR TEC HEADS
284-#25 DEXTRA BAR TEC HEADS
14-#36 HRC 510 MALE COUPLERS

PLACER NOTE:

INSTALL SOFFIT BOTTOM MAT/"BURY" #36 @ CENTER LONG.DIA.-COMPLETE
INSTALL LOWER #43/#25 LONGITUDINAL BARS AT CENTER LONG. DIA. -COMPLETE
INSTALL #19 ATTACHMENTS @ CENTER LONG. DIA. SD CONST JT.
COMPLETE US FACE CLOSURE DIAPHRAGM
COMPLETE CENTER LONGITUDINAL DIAPHRAGM WALL
INSTALL #43/#25 LONGITUDINAL BARS AT CENTER LONG. DIA. BLISTERS -COMPLETE
COMPLETE CENTER LONGITUDINAL DIAPHRAGM BLISTERS

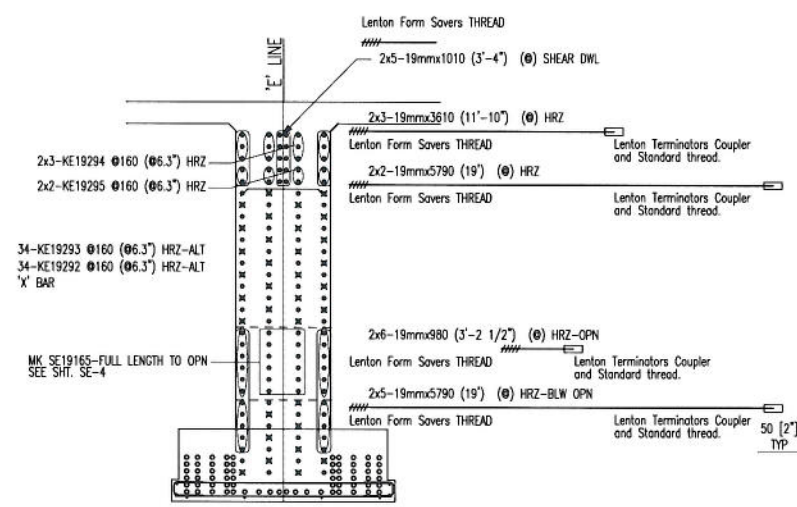

CENTER LONG. DIA.-HORZ-SECTION

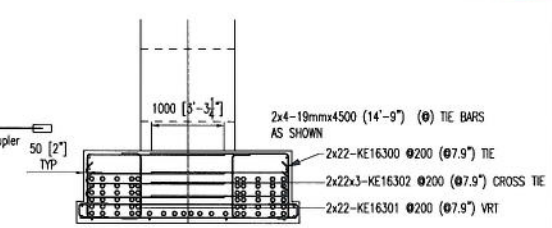

CENTER LONG. DIA.-BLISTER DETAIL

APPROVED
APPROVED AS NOTED
NOT APPROVED
Pursuant to Section 5-1.02 of the Standard Specifications State of California DEPARTMENT OF TRANSPORTATION Division of Structures Office of Structure Construction
Signed
Structure Representative
Date 7/3/12

Contractor: AM.BRIDGE/FLUOR-JV
Customer: CAL TRANS
Refer to Run No: KE-MD
Date 05/31/2012 | Drawn RJC | Chkd. | Contract No. 13114174 | Dwg. No. KE-11

Project: BI TRANSITION STRUCTURES EASTBOUND BRIDGE
Drawing: HINGE KE CLOSURE CENTER DIA ELEV/SECTION

Harris & Sahnas Repair INC.
355 SOUTH VASCO ROAD, LIVERMORE, CALIFORNIA 94550
TEL: (925) 373-0733 FAX: (925) 373-0136

No.	Description	Date	By
	FOR REVIEW	06/08/2012	RJC
	REV PER REVIEW	06/28/2012	RJC
	FOR PLACING	XX/XX/2012	RJC

The full extent and degree of this agreement is limited to the reinforcing steel bars "ONLY", it is not to be used as a means of other Sub-trades.

OUTER LONGITUDINAL DIAPHRAGMS BAR LIST

Bar Mark	Qty	Size	Total length	Type	'A'	'B'	'C'	'D'	'E'	'F'	'G'	'H'	'J'	'K'	'O'	'R'
	28	25mm	10'			10'										
	16	19mm	14'9 ¼"			14'9 ¼"										
	10	19mm	3'3 ¾"			3'3 ¾"										
	6	19mm	11'10 ¼"			11'10 ¼"										
	14	19mm	19'			19'										
	12	19mm	3'2 ½"			3'2 ½"										
KE16288	44	16mm	3'10"	4	9 ¾"	2'2 ½"	9 ¾"					9 ½"		4 ¼"	2'7"	
KE16289	44	16mm	2'9"	T9	5 ½"	1'9 ¾"					6"					
KE16290	88	16mm	3'1 ½"	T9	5 ½"	2'2"					6"					
KE16291	44	16mm	8'5 ½"	S5	6"	2'10 ¾"	5'1"									
KE19266	38	19mm	16'9 ¼"	33			1'0 ¼"	14'9 ¼"			11 ¼"	10 ¼"		5 ½"	15'2 ¼"	
KE19267	38	19mm	18'9 ¼"	H88	1'0 ¼"	16'8 ½"	1'0 ½"					9"		5"		
KE19268	44	19mm	15'2 ¾"	33			1'0 ¼"	13'2 ¼"			11 ¼"	10 ¼"		5 ½"	13'7 ¾"	
KE19269	44	19mm	17'2 ¾"	H88	1'0 ¼"	15'1 ½"	1'0 ½"					9"		5"		
KE19270	20	19mm	3'6 ¼"	21			2'6 ¾"	11 ½"				10 ¼"		3 ½"		
KE19271	20	19mm	4'1 ¼"	21			3'1 ¾"	11 ½"				10 ¼"		3 ½"		
KE19272	20	19mm	2'10 ¾"	3		1'10 ¾"	11 ¾"					11"		4 ¾"	2'4"	
KE19273	20	19mm	2'4"	3		1'4 ¾"	11 ¾"					11"		4 ¾"	1'8 ¾"	
KE19274	20	19mm	8'6 ¼"	17		1'4 ¼"	3'10 ½"	3'3 ¼"								
KE19275	40	19mm	14'3 ¾"	20		11 ¾"	9'8 ½"	3'7 ¼"								
KE19292	68	19mm	16'1 ¼"	H49		16'1 ¼"									15'9 ¼"	
KE19293	68	19mm	18'1"	H49		18'1"									17'9"	
KE19294	6	19mm	11'10 ½"	H40		11'10 ½"									11'8 ½"	
KE19295	4	19mm	19'0 ¼"	H40		19'0 ¼"									18'10 ½"	
KE25276	22	25mm	15'2 ¼"	H41		15'2 ¼"									14'8 ½"	
KE25277	22	25mm	14'10"	H41		14'10"									14'4"	
KE25278	22	25mm	14'3 ¾"	H41		14'3 ¾"									13'11"	
KE25279	22	25mm	14'	H41		14'									13'6 ¼"	
KE25280	22	25mm	15'0 ¼"	H41		15'0 ¼"									14'6 ½"	
KE25281	22	25mm	14'2 ½"	H41		14'2 ½"									13'8 ½"	
KE25282	38	25mm	16'7 ¼"	H41		16'7 ¼"									16'1 ¼"	
KE25283	38	25mm	15'9 ¼"	H41		15'9 ¼"									15'3 ½"	
KE25284	40	25mm	10'2 ½"	H41		10'2 ½"									9'8 ½"	
KE25285	16	25mm	8'5 ½"	11		2'9 ½"	2'10 ¾"	2'9 ½"				4'8 ¼"			4'8 ¼"	1'10 ¾"
KE36286	14	36mm	18'8 ½"	17		15'5"	3'3 ¼"									
KE36287	14	36mm	14'10 ¾"	17		11'9 ¼"	3'1 ½"									

ALL DIMENSIONS ARE OUT TO OUT
ALL STEEL A706 Grade 60

FOR TYPICAL BAR BENDS REFER TO
CRSI MANUAL OF STANDARD PRACTICE

KE-OD | 24455.47lbs

CENTER LONGITUDINAL DIAPHRAGM BAR LIST

Bar Mark	Qty	Size	Total length	Type	'A'	'B'	'C'	'D'	'E'	'F'	'G'	'H'	'J'	'K'	'O'	'R'
	14	25mm	10'			10'										
	8	19mm	14'9 ¼"			14'9 ¼"										
	10	19mm	3'3 ¾"			3'3 ¾"										
	6	19mm	11'10 ¼"			11'10 ¼"										
	14	19mm	19'			19'										
	12	19mm	3'2 ½"			3'2 ½"										
KE16300	44	16mm	9'7"	S5	6"	2'10 ¾"	6'2 ½"									
KE16301	44	16mm	4'6 ¼"	2	9 ¾"	2'10 ¾"					9 ¾"					
KE16302	132	16mm	6'8"	T9	5 ½"	6'2 ½"										
KE19275	20	19mm	14'3 ¾"	20		11 ¾"	9'8 ½"	3'7 ¼"								
KE19292	34	19mm	16'1 ¼"	H49		16'1 ¼"									15'9 ¼"	
KE19293	34	19mm	18'1"	H49		18'1"									17'9"	
KE19294	6	19mm	11'10 ½"	H40		11'10 ½"									11'8 ½"	
KE19295	4	19mm	19'0 ¼"	H40		19'0 ¼"									18'10 ½"	
KE19296	40	19mm	5'1 ½"	2	11 ¾"	4'1 ½"										
KE19297	10	19mm	11'5"	17		3'9 ¼"	3'10 ½"	3'9 ¼"								
KE19298	38	19mm	19'5 ¾"	8	11 ¾"	17'6 ¼"					11 ¾"					
KE19299	34	19mm	17'11 ¾"	8	11 ¾"	15'11 ¾"					11 ¾"					
KE25284	20	25mm	10'2 ½"	H41		10'2 ½"									9'8 ½"	
KE25285	8	25mm	8'5 ½"	11		2'9 ½"	2'10 ¾"	2'9 ½"				4'8 ¼"			4'8 ¼"	1'10 ¾"
KE25303	38	25mm	18'0 ¼"	H41		18'0 ¼"									17'6 ¼"	
KE25304	34	25mm	16'5 ¾"	H41		16'5 ¾"									15'11 ¾"	
KE36286	7	36mm	18'8 ½"	17		15'5"	3'3 ¼"									
KE36287	7	36mm	14'10 ¾"	17		11'9 ¼"	3'1 ½"									

ALL DIMENSIONS ARE OUT TO OUT
ALL STEEL A706 Grade 60

FOR TYPICAL BAR BENDS REFER TO
CRSI MANUAL OF STANDARD PRACTICE

KE-MD | 12931.01lbs

TOP DECK-SLAB/BEAM BAR LIST

Bar Mark	Qty	Size	Total length	Type	'A'	'B'	'C'	'D'	'E'	'F'	'G'	'H'	'J'	'K'	'O'	'R'
	80	25mm	6'7 ¼"			6'7 ¼"										
	16	16mm	6'			6'										
	5	36mm	42'9"			42'9"										
	6	19mm	25'6"			25'6"										
	16	16mm	2'9 ¾"			2'9 ¾"										
	28	13mm	9'7"			9'7"										
	118	16mm	11'1 ¾"			11'1 ¾"										
	32	19mm	6'7 ¼"			6'7 ¼"										
	6	19mm	6'4 ¾"			6'4 ¾"										
	6	19mm	26'6"			26'6"										
	76	19mm	25'7 ¾"			25'7 ¾"										
	80	19mm	21'5 ¾"			21'5 ¾"										
	12	19mm	6'2"			6'2"										
	6	19mm	27'			27'										
	5	36mm	27'4"			27'4"										
	4	19mm	23'11 ¾"			23'11 ¾"										
	5	36mm	24'7"			24'7"										
	10	36mm	6'11 ¾"			6'11 ¾"										
	4	19mm	3'1"			3'1"										
	8	22mm	3'7"			3'7"										
	8	22mm	23'11 ¾"			23'11 ¾"										
	8	13mm	20'0 ¼"			20'0 ¼"										
	28	22mm	21'5 ¾"			21'5 ¾"										
	8	13mm	13'			13'										
	5	36mm	20'6 ¾"			20'6 ¾"										
	5	36mm	26'7 ¼"			26'7 ¼"										
	5	36mm	18'7 ¼"			18'7 ¼"										
	16	25mm	25'6"			25'6"										
	104	25mm	6'			6'										
KE16316	102	16mm	6'11 ¾"	17		2'5 ¼"	2'1 ½"	2'5 ¼"								
KE16317	102	16mm	3'1"	T9	5 ½"	2'1 ½"					6"					
KE16318	102	16mm	8'5 ½"	17		3'1 ¾"	2'1 ½"	3'1 ¾"								
KE19305	4	19mm	3'8 ½"	3	7 ¾"	1'11 ½"	1'1"					9 ½"	6"	8 ¼"	2'8"	
KE19306	2	19mm	3'4 ½"	3	7 ¾"	1'7 ¾"	1'1"					9 ½"	6"	8 ¼"	2'4"	
KE19308	2	19mm	4'4"	1	7 ¾"	3'8"							6"			
KE19309	4	19mm	4'6 ¾"	1	7 ¾"	3'10 ¾"							6"			
KE19310	23	19mm	8'11"	3		7'10"	1'1"					9 ¾"		8 ¼"	8'6 ¼"	
KE19311	4	19mm	10'1 ¼"	1	7 ¾"	9'5 ½"							6"			
KE19312	2	19mm	9'10"	1	7 ¾"	9'2 ¼"							6"			
KE19313	4	19mm	14'8 ¾"	1	7 ¾"	14'1"							6"			
KE19314	2	19mm	14'5 ½"	1	7 ¾"	13'9 ¾"							6"			
KE19315	224	19mm	4'7"	1	7 ¾"	3'11 ¼"							6"			
KE25307	16	25mm	8'11"	3		7'10"	1'1"					9 ¾"		8 ¼"	8'6 ¼"	
KE25319	38	25mm	10'1 ¼"	H38	1'4 ¼"	8'9 ½"									8'6 ¾"	
KKE25320	40	25mm	8'2"	H38	1'4 ¼"	6'10"									6'7 ¼"	
KKE25321	52	25mm	12'6 ½"	2	1'4 ¼"	11'2 ¾"										
	52	19mm	6'5 ¼"			6'5 ¼"										
	80	19mm	8'4 ¾"			8'4 ¾"										
	20	22mm	25'7 ¾"			25'7 ¾"										

ALL DIMENSIONS ARE OUT TO OUT
ALL STEEL A706 Grade 60

FOR TYPICAL BAR BENDS REFER TO
CRSI MANUAL OF STANDARD PRACTICE

KE-TD | 29927.03lbs

☒ APPROVED
☐ APPROVED AS NOTED
☐ NOT APPROVED

Pursuant to Section 5-1.02
of the Standard Specifications
State of California
DEPARTMENT OF TRANSPORTATION
Division of Structures
Office of Structure Construction

Signed [signature]
Structure Representative
Date 7/3/12

No.	Description	Date	By
	FOR REVIEW	06/08/2012	RJC
	REVISED/RE-SUB	06/28/2012	RJC
	FOR PLACING	XX/XX/2012	RJC

The full intent and purpose of this drawing is the placing of reinforcing steel bars ONLY. It is NOT to be used as a means of communication between the Architect, Engineer, Contractor or any other Sub-trades.

Harris Salinas Rebar INC.
355 SOUTH VASCO ROAD, LIVERMORE, CALIFORNIA 94550
TEL. (925) 373-0733 FAX. (925) 373-0136

Project: YBI TRANSITION STRUCTURES
EASTBOUND BRIDGE

Drawing: HINGE KE CLOSURE
LONG. DIA/TOP DECK BAR LISTS

Contractor: AM.BRIDGE/FLUOR-JV
Customer: CAL TRANS
Refer to Run No: KE-OD

Date	Drawn	Chkd.	Contract No.	Dwg. No.
05/31/2012	RJC		13114174	KE-BL4

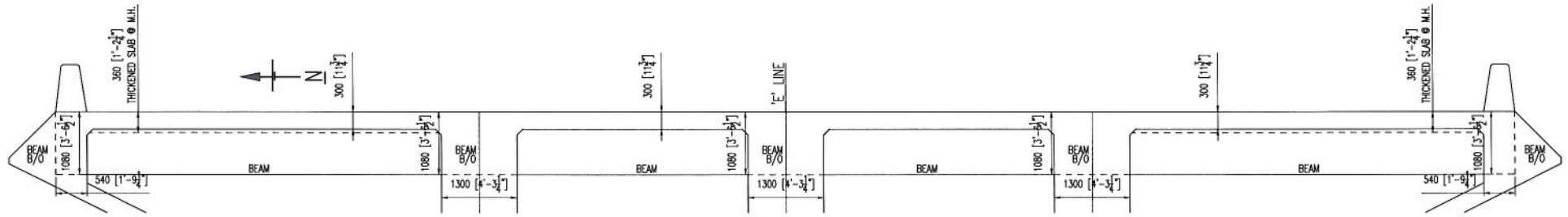

HINGE K CLOSURE/ELEVATION-TOP DECK @ BEAM

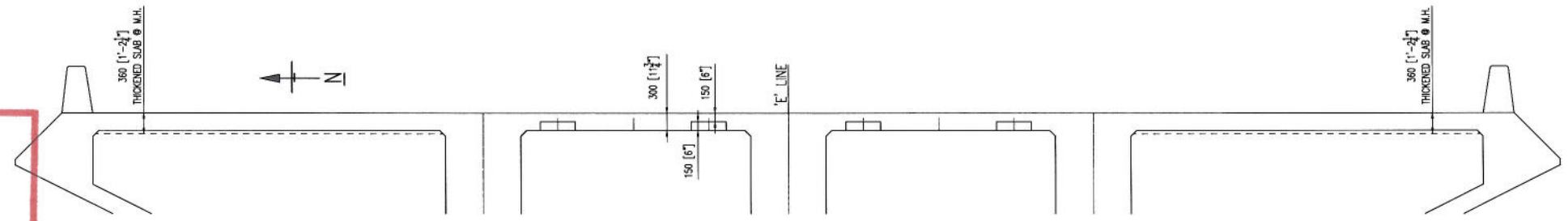

HINGE K CLOSURE/ELEVATION-TOP DECK

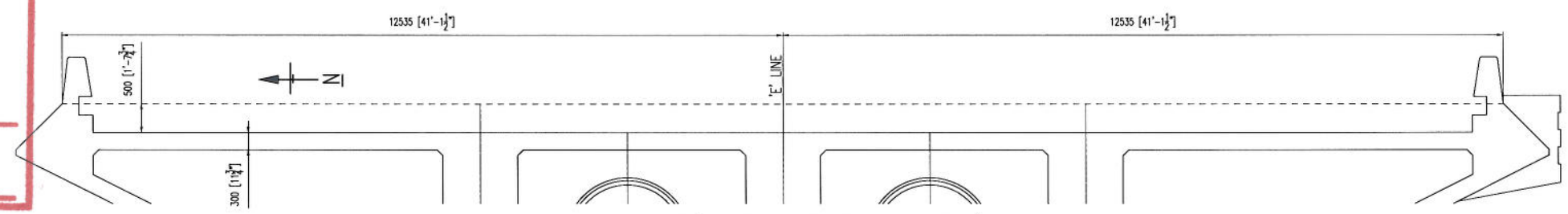

HINGE K CLOSURE/ELEVATION-TOP DECK @ JOINT B/O

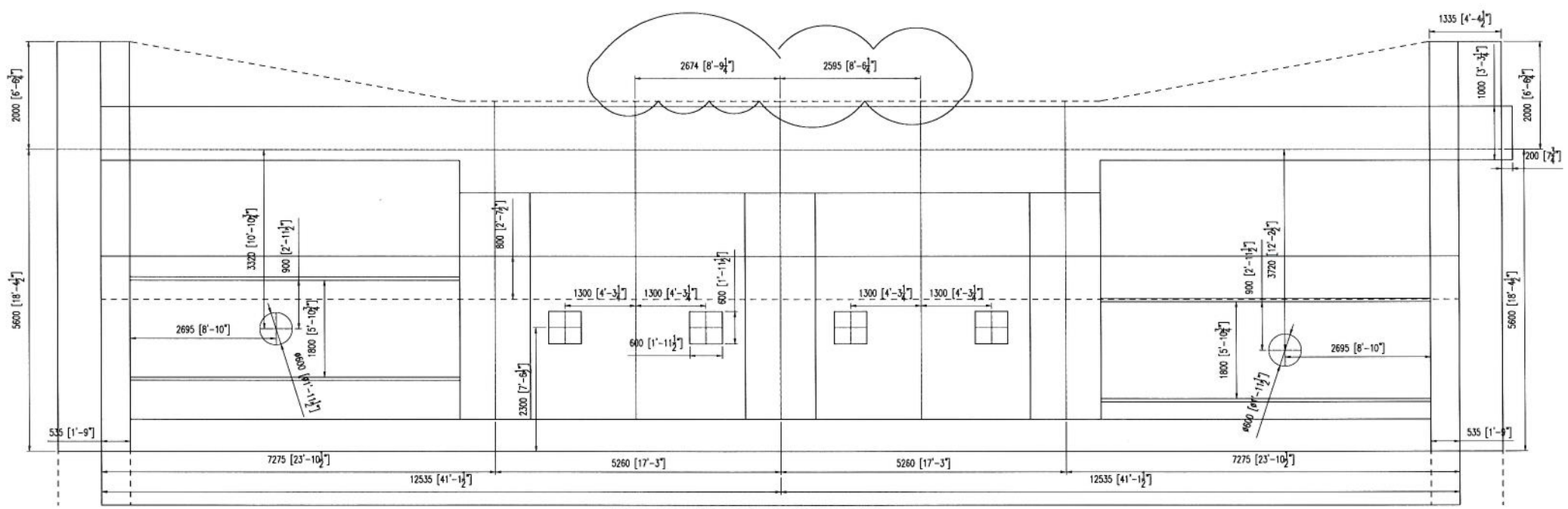

HINGE K CLOSURE/PLAN-TOP DECK

APPROVED

APPROVED AS NOTED

NOT APPROVED

Pursuant to Section 5-1.02
the Standard Specifications
State of California
DEPARTMENT OF TRANSPORTATION
Division of Structures
Office of Structure Construction

Signed _____
Structure Representative

Date 7/3/12

Contractor: AM.BRIDGE/FLUOR-JV
Customer: CAL TRANS
Refer to Run No: KE-TD

Date	Drawn	Chkd.	Contract No.	Dwg. No.
05/31/2012	RJC		13114174	KE-12

Project: YBI TRANSITION STRUCTURES
EASTBOUND BRIDGE

Drawing: HINGE KE CLOSURE
TOP DECK PLAN/ELEV

Harris Salinas Rebar INC.
355 SOUTH VASCO ROAD, LIVERMORE, CALIFORNIA 94550
TEL. (925) 373-0733 FAX. (925) 373-0136

No.	Description	Date	By
	FOR REVIEW	06/08/2012	RJC
	REV PER REVIEW	06/28/2012	RJC
	FOR PLACING	XX/XX/2012	RJC

The full intent and purpose of this drawing is the placing of reinforcing steel bars ONLY. It is NOT to be used as a means of communication between the Architect, Engineer, Contractor or any other Sub-trades.

Lenton Form Savers THREAD

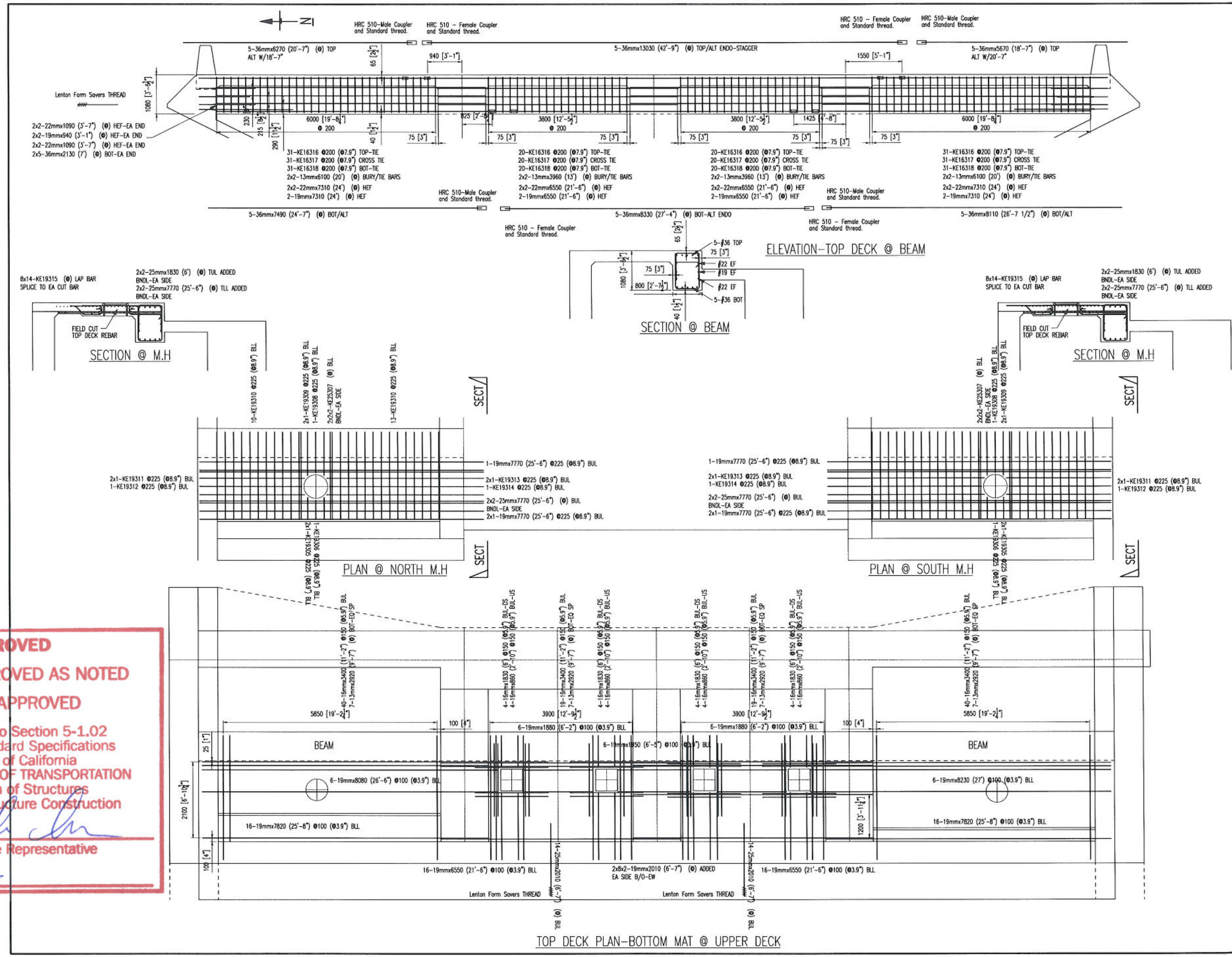

☒ APPROVED

☐ APPROVED AS NOTED

☐ NOT APPROVED

Pursuant to Section 5-1.02
of the Standard Specifications
State of California
DEPARTMENT OF TRANSPORTATION
Division of Structures
Office of Structure Construction

Signed _____
Structure Representative

Date 7/3/12

Project: YBI TRANSITION STRUCTURES
EASTBOUND BRIDGE

Drawing: HINGE KE CLOSURE
TOP DECK-BOT/BEAM PLAN/ELEV

Contractor: AM.BRIDGE/FLUOR-JV
Customer: CAL TRANS
Refer to Run No: KE-TD

Date	Drawn	Chkd.	Contract No.	Dwg. No.
05/31/2012	RJC		13114174	KE-13

Harris Salinas Rebar INC.
355 SOUTH VASCO ROAD, LIVERMORE, CALIFORNIA 94550
TEL. (925) 373-0733 FAX. (925) 373-0136

No.	Description	Date	By
	FOR REVIEW	06/08/2012	RJC
	REV PER REVIEW	06/28/2012	RJC
	FOR PLACING	XX/XX/2012	RJC

The full intent and purpose of this drawing is the placing of reinforcing steel bars ONLY. It is NOT to be used as a means of communication between the Architect, Engineer, Contractor or any other Sub-trades.

☒ APPROVED
☐ APPROVED AS NOTED
☐ NOT APPROVED

Pursuant to Section 5-1.02
of the Standard Specifications
State of California
DEPARTMENT OF TRANSPORTATION
Division of Structures
Office of Structure Construction

Signed _____
Structure Representative

Date 7/3/12

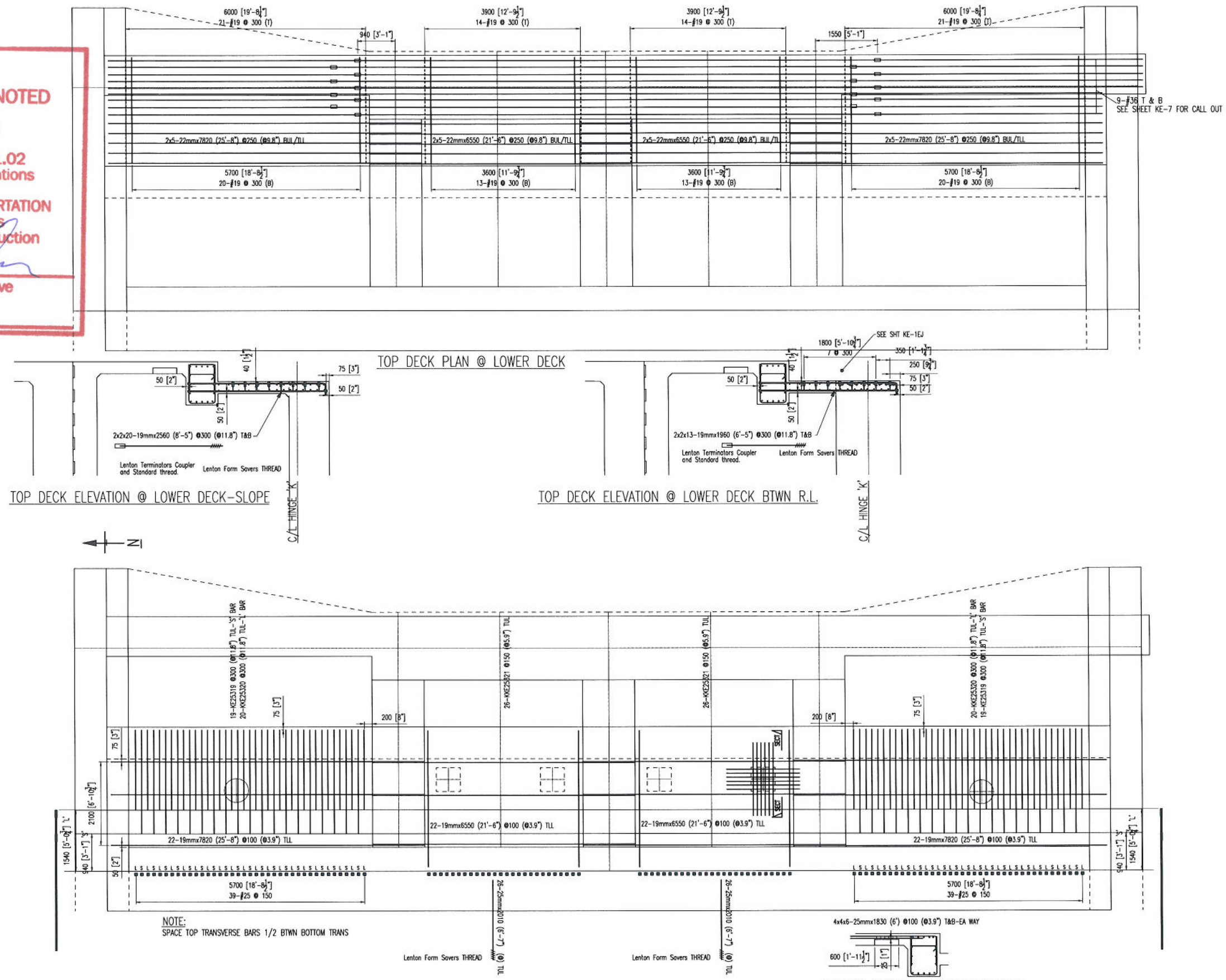

TOP DECK PLAN @ LOWER DECK

TOP DECK ELEVATION @ LOWER DECK-SLOPE

TOP DECK ELEVATION @ LOWER DECK BTWN R.L.

NOTE:
SPACE TOP TRANSVERSE BARS 1/2 BTWN BOTTOM TRANS

TOP DECK PLAN-TOP MAT @ UPPER DECK

SECTION-PARTIAL DEPTH BLOCKOUT
4 LOCATIONS

Contractor: AM.BRIDGE/FLUOR-JV
Customer: CAL TRANS
Refer to Run No: KE-TD

Date	Drawn	Chkd.	Contract No.	Dwg. No.
05/31/2012	RJC		13114174	KE-14

Project: YBI TRANSITION STRUCTURES
EASTBOUND BRIDGE

Drawing: HINGE KE CLOSURE
TOP DECK-TOP PLAN/ELEV

Harris Salinas Rebar INC.
355 SOUTH VASCO ROAD, LIVERMORE, CALIFORNIA 94550
TEL. (925) 373-0733 FAX. (925) 373-0136

No.	Description	Date	By
	FOR REVIEW	06/08/2012	RJC
	REVI PER REVIEW	06/28/2012	RJC
	FOR PLACING	XX/XX/2012	RJC

The full intent and purpose of this drawing is the placing of reinforcing steel bars ONLY. It is NOT to be used as a means of communication between the Architect, Engineer, Contractor or any other Sub-trades.