DIST	COUNTY	ROUTE	KILOMETER POST TOTAL PROJECT	SHEET No	TOTAL SHEETS
04	SF	80	13.2/13.9	180 R2	1204

Caltrans Metric

REGISTERED ELECTRICAL ENGINEER 12/19/02 DATE

12-6-04
PLANS APPROVAL DATE

REGISTERED PROFESSIONAL ENGINEER JENS ERLINGSSON No. 8249 Exp. 9/30/06 ELECTRICAL STATE OF CALIFORNIA

PB POWER, Inc.
A Parsons Brinckerhoff Company
303 Second St., Suite 700N
San Francisco, CA 94107-1317

The State of California or its officers or agents shall not be responsible for the accuracy or completeness of electronic copies of this plan sheet.

Caltrans now has a web site! To get to the web site, go to: http://www.dot.ca.gov

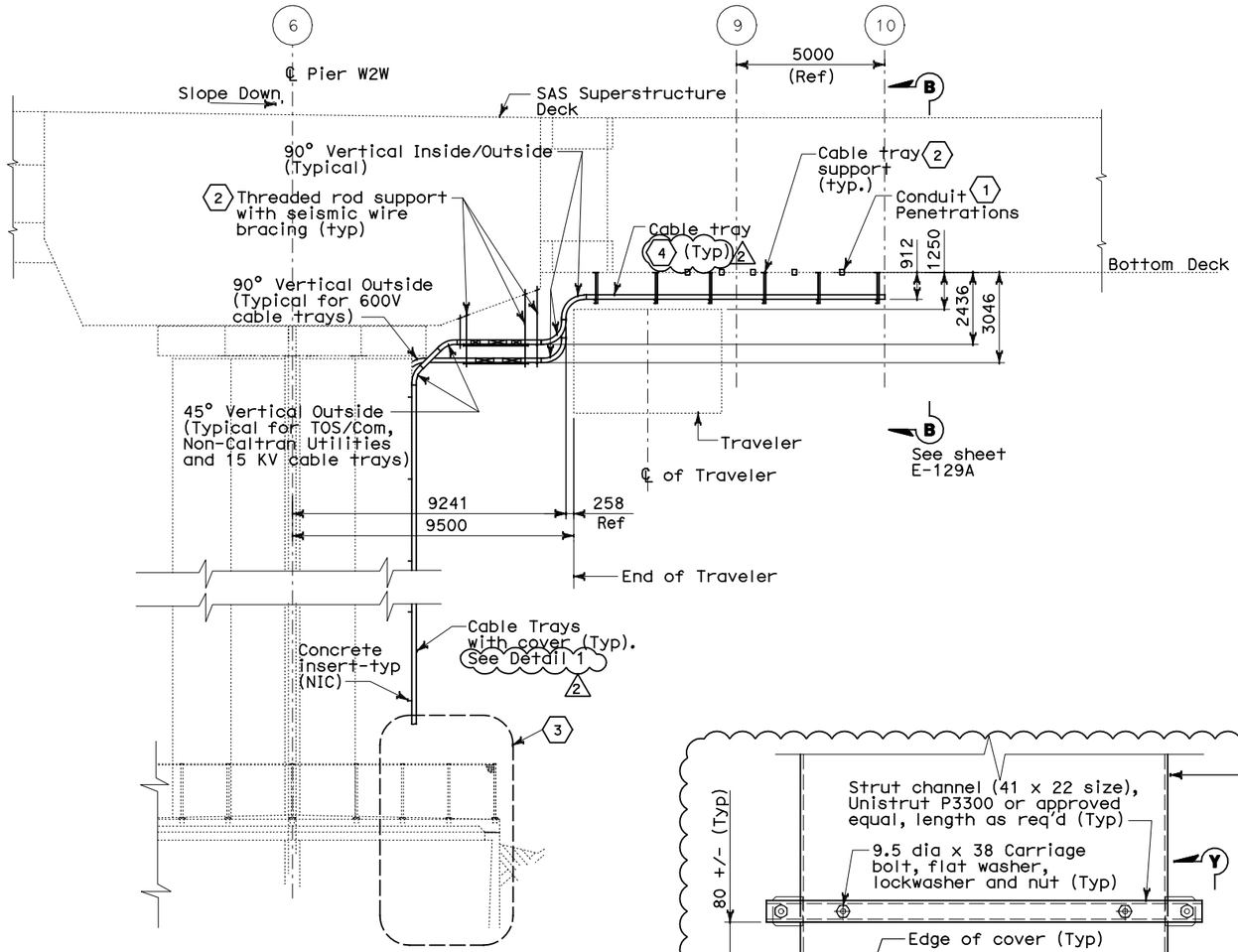

SECTION A-A
SCALE:1:100

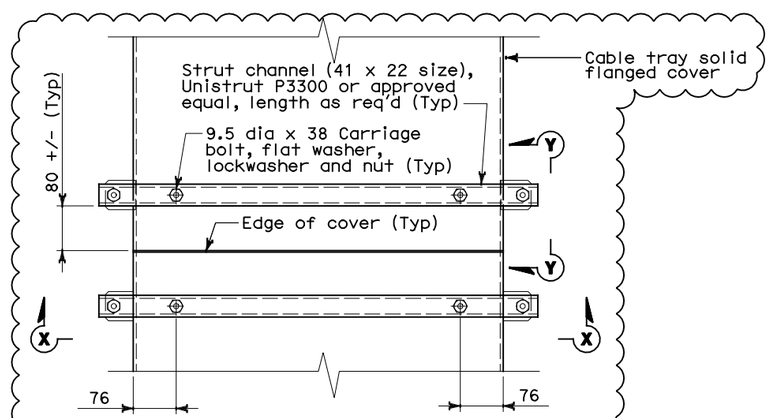

DETAIL 1 - ELEVATION
SCALE: NONE

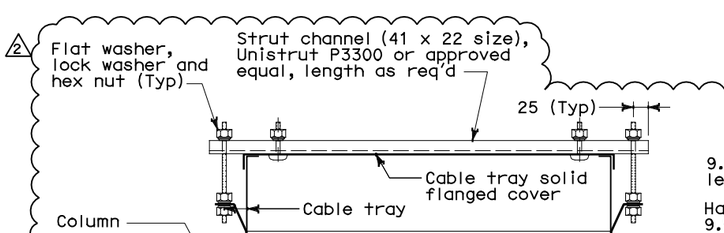

SECTION X-X 5
SCALE: NONE

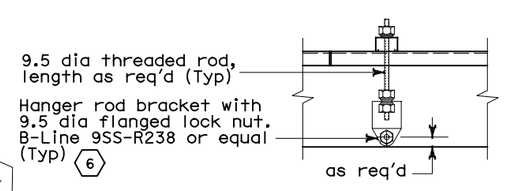

SECTION Y-Y
SCALE: NONE

SHEET NOTES:

1. See sheet E-126 for location.
2. For cable tray support Type and location, see sheet E-126.
3. For Pier W2W details, see sheet E-20 through E-20F.
4. All cable tray under the girder shall have peaked flanged cover on top and solid flanged cover at the bottom with approved heavy duty cover clamps. Vertical cable tray run on the column shall have solid flanged cover on top and no cover at the bottom, except when cable tray is not flush with the column. (2)
5. All hardware shall be 316 stainless steel.
6. Contractor shall install the hanger rod bracket clear from the existing cable tray supports and concrete inserts.

REGISTERED PROFESSIONAL ENGINEER SAFIUDDIN A. MOHAMED No. 71894 CIVIL STATE OF CALIFORNIA

FOR REVISION ONLY 2

REGISTERED PROFESSIONAL ENGINEER S. A. ESTOQUE, JR. No. E-10151 Exp. 12/31/2008 ELECTRICAL STATE OF CALIFORNIA

FOR REVISION ONLY 1

REQUEST FOR INFORMATION NOT ADDRESSED IN THIS CCO REMAIN IN FORCE

MARK	DATE	DESCRIPTIONS	BY	CH'D	CCO#
2	02/17/12	CABLE TRAY COVER AT W2	RSB	RG	234
1	02/25/08	CABLE TRAY CHANGES	RG	SE	42S1

REVISIONS

CONTRACT CHANGE ORDER NO._____
SHEET_____ OF _____

DETAILS
SAS SUPERSTRUCTURE GIRDER WESTBOUND PIER W2W SECTION AND PLANS
SCALE AS NOTED

E-128

THIS PLAN IS ACCURATE FOR ELECTRICAL WORK ONLY.

ALL DIMENSIONS ARE IN MILLIMETERS UNLESS OTHERWISE SHOWN

FOR REDUCED PLANS ORIGINAL SCALE IS IN MILLIMETERS 0 20 40 60 80

DGN FILE =>04-0120f1_0180R02.dgn
USERNAME =>llorico

CU 04251 | EA 0120F1

LAST REVISION 00-00-00
DATE PLOTTED => 15-FEB-2012
TIME PLOTTED => 15:50

STATE OF CALIFORNIA - DEPARTMENT OF TRANSPORTATION
Caltrans

DESIGN OVERSIGHT
BEHZAD GOLEMOHAMMADI

CALCULATED/DESIGNED BY FK
CHECKED BY IAH

DATE	REVISED BY
08/02	IAH
08/02	3/04